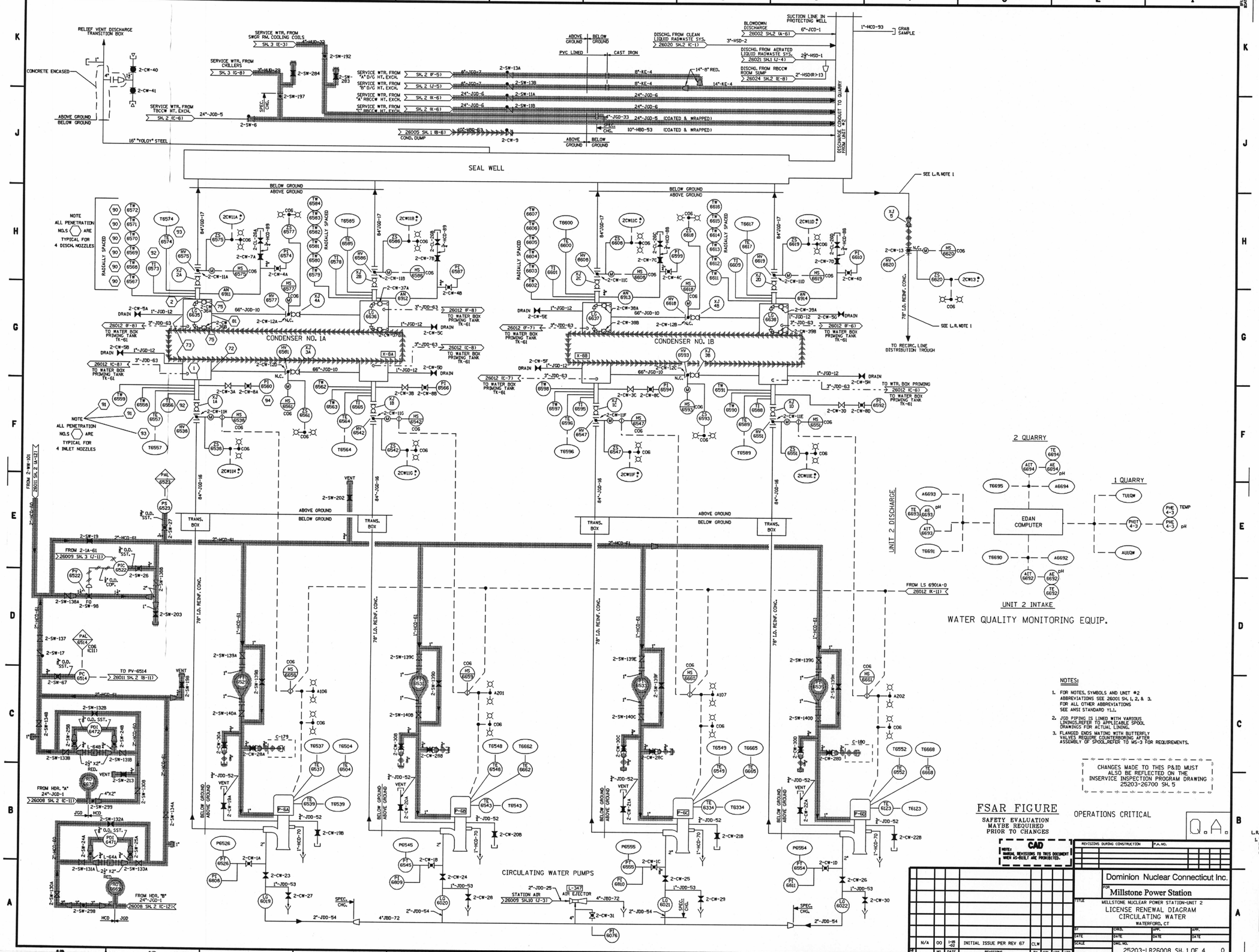

Submitted by SEKULIC on Monday December 22 2003 at 07:41:49 AM EST