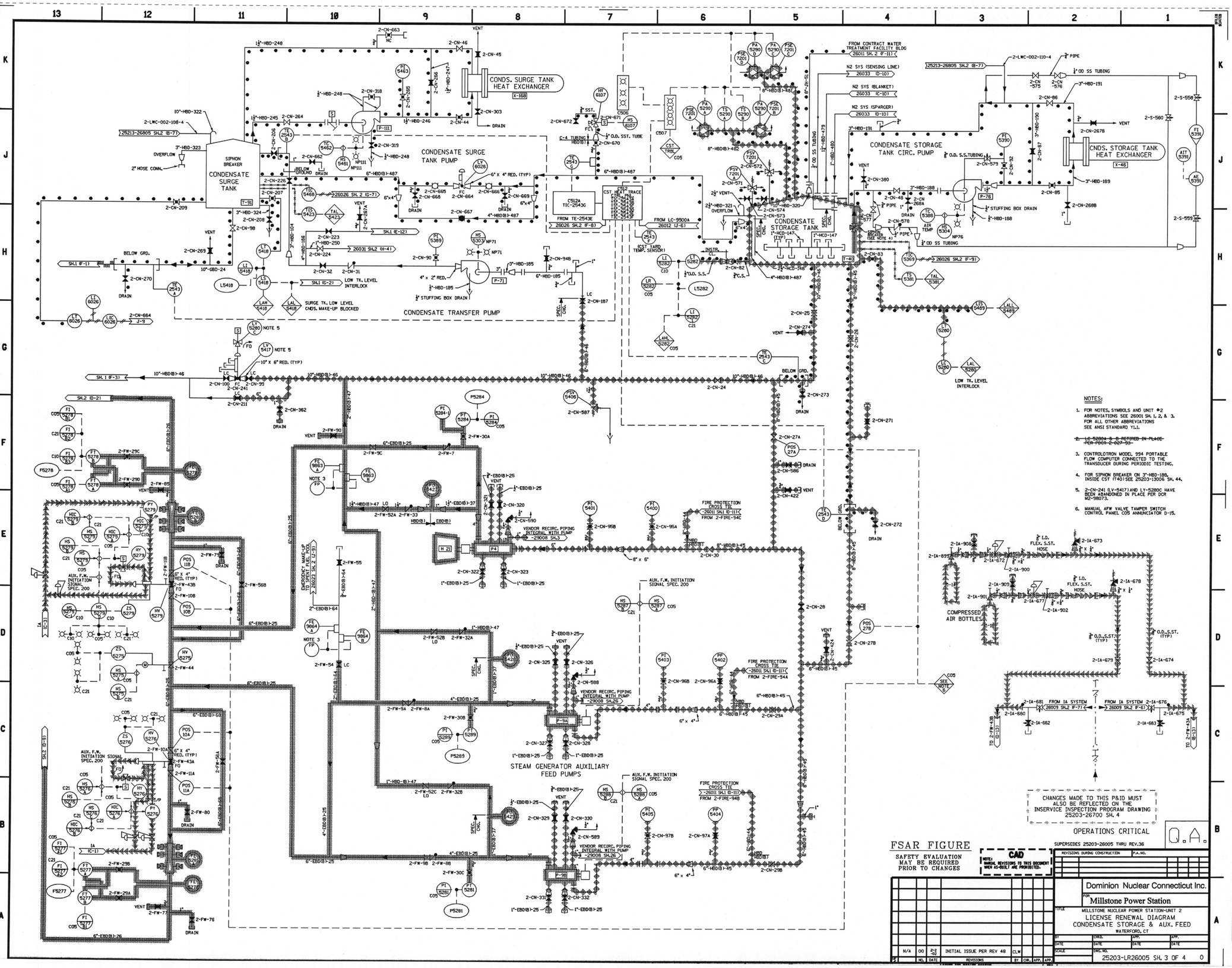

ubmitted by SEKULIC on Monday December 22 2003 at 07:42:01 AM EST