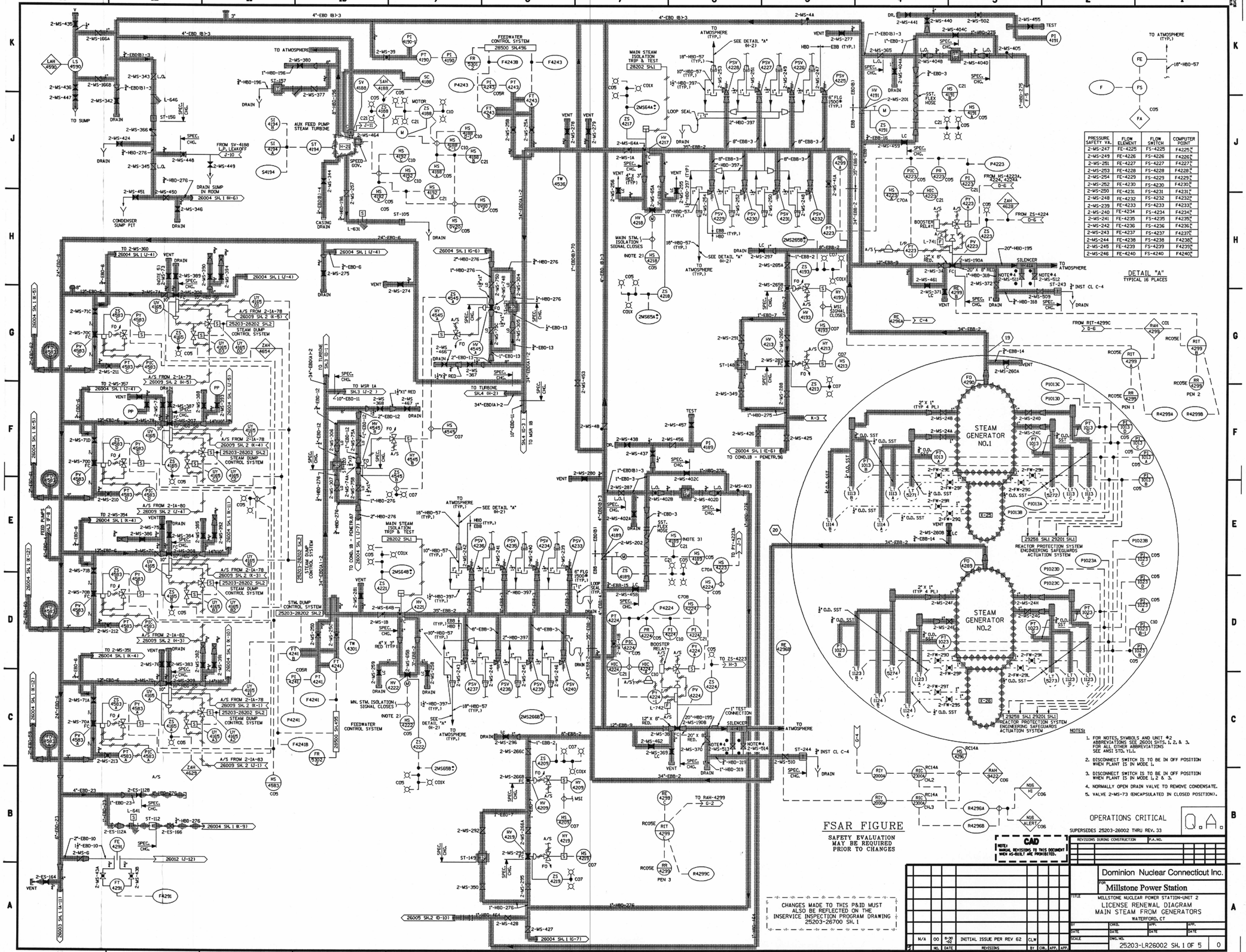

PRESSURE SAFETY VA.	FLOW ELEMENT	FLOW SWITCH	COMPUTER POINT
2-MS-247	FE-4225	FS-4225	F4225H
2-MS-249	FE-4226	FS-4226	F4226H
2-MS-251	FE-4227	FS-4227	F4227H
2-MS-253	FE-4228	FS-4228	F4228H
2-MS-254	FE-4229	FS-4229	F4229H
2-MS-252	FE-4230	FS-4230	F4230H
2-MS-250	FE-4231	FS-4231	F4231H
2-MS-248	FE-4232	FS-4232	F4232H
2-MS-239	FE-4233	FS-4233	F4233H
2-MS-240	FE-4234	FS-4234	F4234H
2-MS-241	FE-4235	FS-4235	F4235H
2-MS-242	FE-4236	FS-4236	F4236H
2-MS-243	FE-4237	FS-4237	F4237H
2-MS-244	FE-4238	FS-4238	F4238H
2-MS-245	FE-4239	FS-4239	F4239H
2-MS-246	FE-4240	FS-4240	F4240H

NOTES:

1. FOR NOTES, SYMBOLS AND UNIT #2 ABBREVIATIONS SEE 26001 SHTS. 1, 2, & 3. FOR ALL OTHER ABBREVIATIONS SEE ANSI STD. Y1.1.
2. DISCONNECT SWITCH IS TO BE IN OFF POSITION WHEN PLANT IS IN MODE 1.
3. DISCONNECT SWITCH IS TO BE IN OFF POSITION WHEN PLANT IS IN MODE 1, 2 & 3.
4. NORMALLY OPEN DRAIN VALVE TO REMOVE CONDENSATE.
5. VALVE 2-MS-73 (ENCAPSULATED IN CLOSED POSITION).

Submitted by SEKULIC on Monday December 22 2003 at 07:43:08 AM EST