Enclosure 2

Joseph M. Farley Nuclear Plant

Reactor Vessel Head Penetration Nozzle Inspection Relaxation Unit 2 Spring 2004 – 2R16

Mike Stinson
Vice President
Southern Nuclear

Agenda

1. Introduction and Purpose
2. NRC Order EA-03-009 Overview
   - Safety Issues
   - Inspection Requirements
3. SNC Response to Order
4. Specific FNP 2R16 Relaxation Request
5. Basis for FNP 2R16 Relaxation Request
6. FNP 2R16 Spring 2004 Inspection Plans
7. Summary
8. NRC Feedback

1. Introduction and Purpose

- Discuss NRC Order requirements
- Discuss Farley's reactor vessel head inspection history and results
- Discuss specific relaxation request for 2R16, basis for request, and inspection plans
- Receive NRC feedback on relaxation request

2. NRC Order EA-03-009

- Safety Issues
  - Corrosion of the RPV head
  - Nozzle ejection
- FNP Unit 2 is in the "High" category for susceptibility to PWSCC
- Inspection Requirements – each outage
  - RPV head bare metal visual
  - Penetration nozzle non-visual NDE

3. SNC Response to Order

- SNC consented to the Order
- SNC also requested relaxation of the required inspection coverage due to the physical limits imposed by:
  - "Footprint" of the CRDM shroud on the head
  - Configuration of the nozzle bottoms (OD thread and ID taper)
- NRC approved the requested relaxation
- An Order revision reflecting these generically applicable relaxations is expected soon

4. Specific U2R16 Relaxation Request

- Farley will perform IV. C.(1)(a), bare metal visual of the RPV head
- Relaxation is requested to not perform non-visual examination per Item IV.C.(1)(b)
- Relaxation is requested per Order Item IV.F.(2) because compliance would result in hardship without a compensating increase in safety
- The hardship entailed is an estimated 4.1 Rem of additional radiation exposure to inspection personnel

5. Basis for Relaxation Request

- Cracks through either the nozzle or J-groove weld can cause corrosion only after they reach the nozzle annulus area.
- Corrosion products occupy more volume than the steel corroded and therefore are forced to the head surface.
- Bare metal visual inspection will detect corrosion products on the head surface.

5. Basis for Relaxation Request (continued)

- Fall 2002 2R15 bare metal visual inspection of the head and UT exam of the nozzles detected no evidence of cracks.
- Analysis demonstrates that nozzle cracks propagating from below the examined volume (or from flaws within the examined volume too small to detect) would take >2 operating cycles to cause leakage.
- Industry experience shows that leakage over multiple operating cycles is required for head corrosion to threaten a LOCA.

5. Basis for Relaxation Request (continued)

- Unit 2 head replacement is planned for fall 2005 at 2R17.
- Analysis demonstrates that about 12 cycles of operation are needed for a circumferential crack to threaten nozzle ejection.
- Only 2 cycles will have elapsed since the last nozzle UT in fall 2002 (2R15) when the planned head replacement occurs in fall 2005 (2R17).

5. Basis for Relaxation Request (continued)

- Unit 2 has injected zinc into the RCS for >5 years; SNC believes this has mitigated initiation of PWSCC (as has been shown by laboratory testing).
- Unit 2 will have accrued fewer EDY at 2R16 (16.8 EDY) than Unit 1 had when found crack-free by BMV and UT examination per the Order in spring 2003 at 1R18 (17.5 EDY).

5. Basis for Relaxation Request

Summary

- Bare metal visual will address the RPV head corrosion safety concern
  - corrosion products will appear on the RPV head
  - industry experience demonstrates multiple operating cycles are required to threaten a LOCA
- Analysis shows NDE each outage is not needed to address nozzle ejection safety concern
  - circumferential cracking requires about 12 cycles to threaten nozzle ejection

6. Farley Unit 2 Spring 2004 Inspection Plans

- Farley will perform a bare metal visual inspection of the outer surface of the RPV top head per Order Item IV. C.(1)(a).
- Absent approval of the requested relaxation of the Order, Farley will perform UT examination of the RPV penetration nozzles per option IV.C.(1)(b)(i).
- Farley will also perform a visual examination of the outer surface of the RPV bottom head as described in SNC's response to NRC Bulletin 2003-02.

7. Summary

- Performing only a bare metal visual inspection provides adequate assurance that the safety concerns of Order EA-03-009 are met.
- This is supported by the previous crack-free inspection history and crack propagation time analyses for FNP Unit 2.
- Performance of non-visual NDE during the spring 2004 Unit 2 outage (2R16) would therefore impose a hardship (~4.1 Rem dose to inspection personnel) without a compensating increase in the level of quality and safety.

8. NRC Feedback

- SNC's Technical Approach
- NRC's Review Schedule
- Projected Decision Date
  (2R16 Outage Starts 3/13/2004)

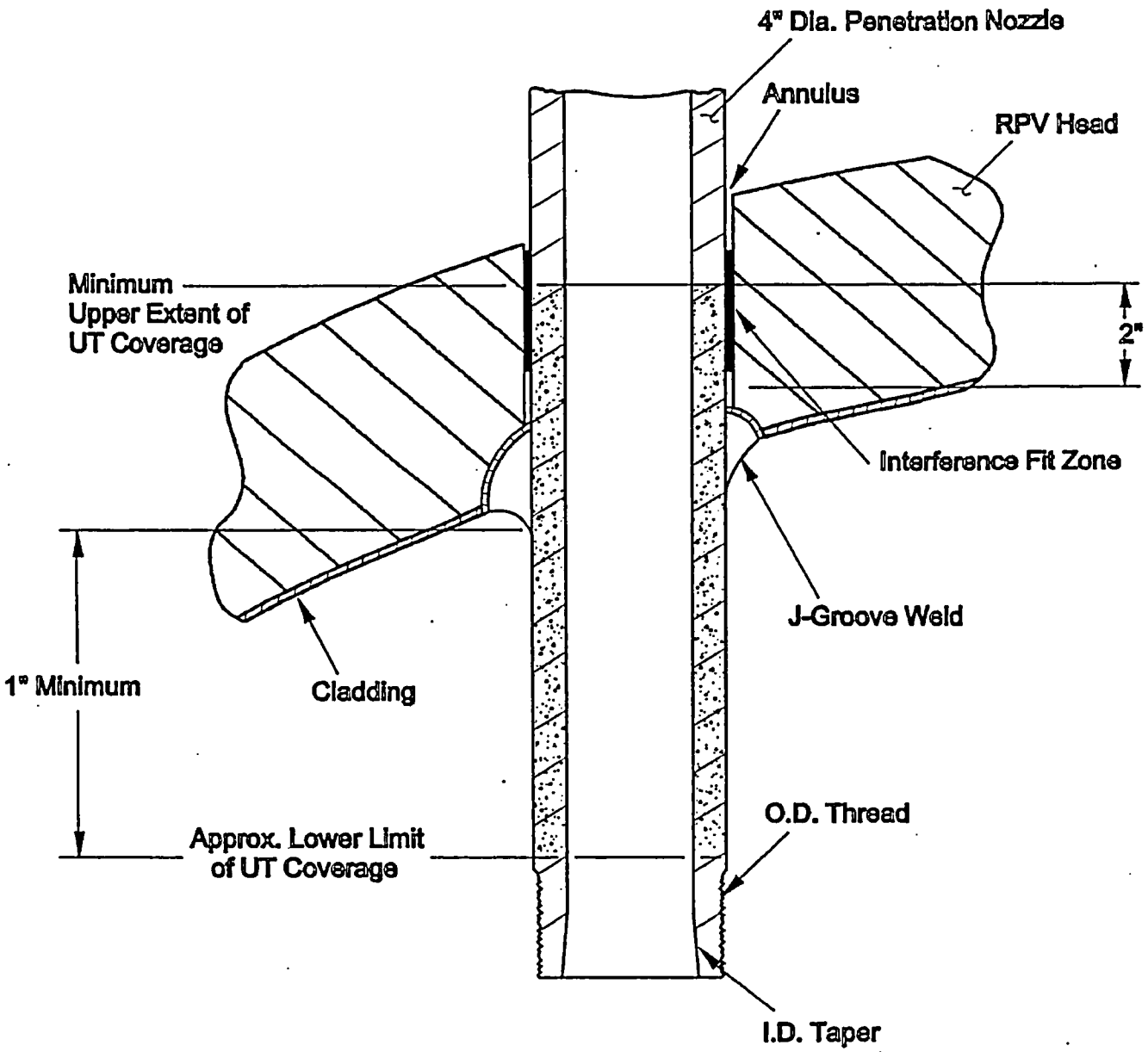

Penetration nozzle volume covered by UT exam during fall 2002 outage 2R15

NOT TO SCALE

FNP UNIT 2

TYPICAL PENETRATION NOZZLE CROSS-SECTION

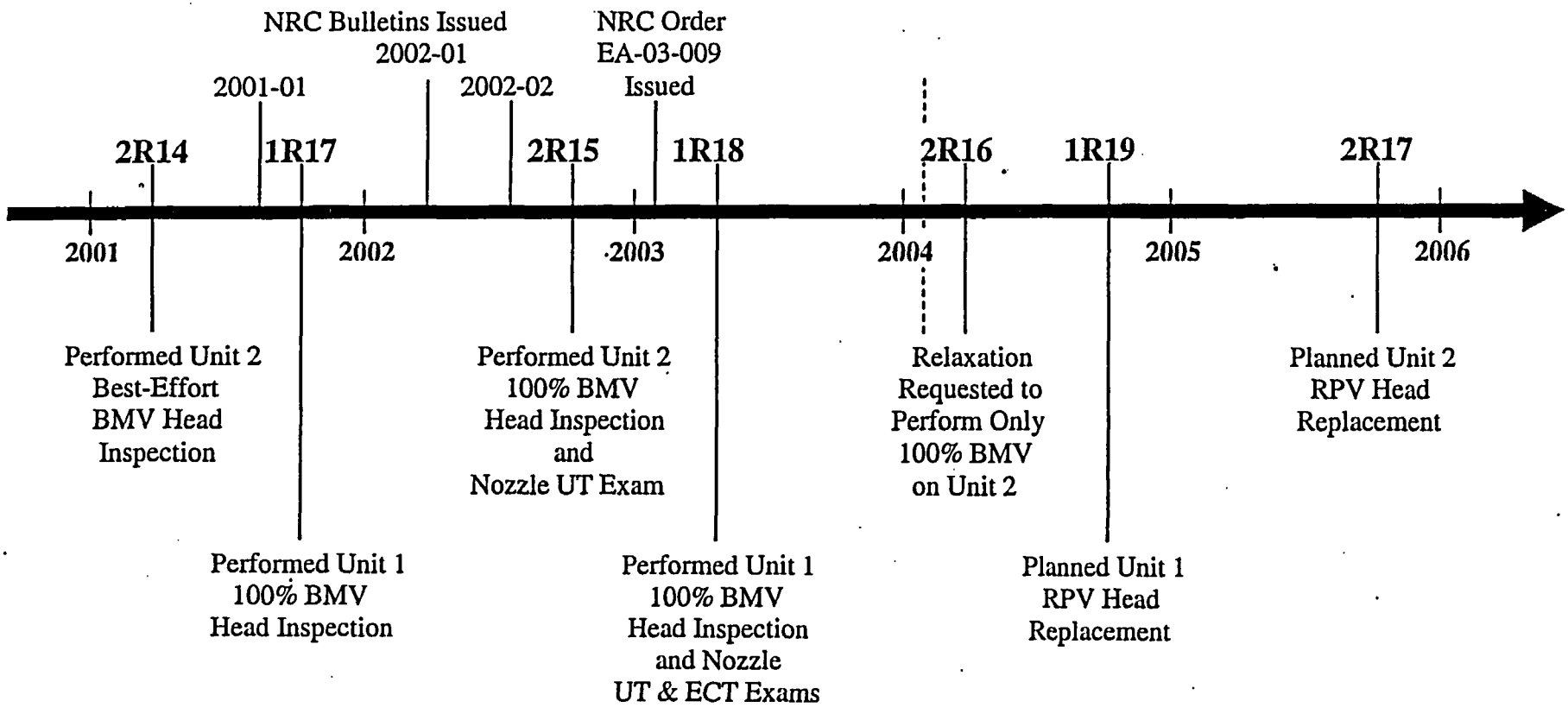

Farley Nuclear Plant Units 1 & 2
RPV Closure Head Inspection and Replacement Timeline