TECHNICAL REPORT
TR-3270-9-90

AN OPERATIONAL ASSESSMENT OF THE BABCOCK & WILCOX AND COMBUSTION ENGINEERING CONTROL ROD DRIVES

September 1990

Prepared by

E. Grove and W. Gunther
Engineering Technology Division

FIN A-3270

DEPARTMENT OF NUCLEAR ENERGY, BROOKHAVEN NATIONAL LABORATORY
UPTON, NEW YORK 11973

Prepared for the U.S. Nuclear Regulatory Commission
Office of Nuclear Regulatory Research
Contract No. DE-AC02-76CH00016

NOTICE

This report was prepared as an account of work sponsored by an agency of the United States Government. Neither the United States Government nor any a[illegible]cy thereof, or any of their employees, makes any warranty, expressed or implied, or assumes any legal liability or responsibility for any third party's use, or the results of such use, of any information, apparatus, product or process disclosed in this report, or represents that its use by such third party would not infringe privately owned rights.

The views expressed in this report are not necessarily those of the U.S. Nuclear Regulatory Commission.

Technical Report
TR-3270-9-90

AN OPERATIONAL ASSESSMENT OF THE BABCOCK & WILCOX AND COMBUSTION ENGINEERING CONTROL ROD DRIVES

September 1990

Prepared by

E. Grove and W. Gunther
Engineering Technology Division

Department of Nuclear Energy
Brookhaven National Laboratory
Upton, New York 11973

Prepared for

U.S. Nuclear Regulatory Commission
Washington, DC 20555

FIN A-3270

ABSTRACT

An engineering study describing progress towards completion of a Phase I aging assessment for the Babcock & Wilcox and Combustion Engineering control rod drive systems has been completed. This study, along with a system Failure Mode and Effect Analysis and a detailed review of utility maintenance practices and procedures will complete the Phase I aging assessment. This study is being performed as part of the Nuclear Plant Aging Research (NPAR) program. The goals of this program are to assess the impact of aging on plant safety and to develop effective mitigating actions.

Commercially available operating experience databases were reviewed to identify failed components and resultant plant operating effects for the 1980-1989 time period. Age related failures for both systems were identified which resulted in significant plant effects including dropped rods, power reduction and shutdown. System susceptibility to external influences such as maintenance errors and the operating environment was also shown.

CONTENTS

		Page
Abstract		iii
List of Figures		vii
List of Tables		viii
Acknowledgement		ix
1.	INTRODUCTION	1-1
1.1	Background	1-1
1.2	Objectives	1-3
1.3	System Boundary	1-4
1.4	Analysis Methodology and Report Format	1-4
1.5	Future Work	1-7
2.	DESCRIPTION OF THE COMBUSTION ENGINEERING CONTROL ELEMENT DRIVE SYSTEM	2-1
2.1	Introduction	2-1
2.2	Control Element Assemblies	2-1
2.3	Control Element Drive Mechanisms	2-1
2.3.1	CEDM Design Variations	2-6
2.4	CEA Position Indication System	2-6
2.5	Control Element Drive Mechanism Control System	2-9
2.6	CEDM Cooling System	2-9
3.	DESCRIPTION OF THE BABCOCK & WILCOX CONTROL ROD DRIVE SYSTEM	3-1
3.1	Introduction	3-1
3.2	Control Rod Assemblies	3-1
3.3	Control Rod Drive Mechanisms	3-1
3.4	Control Rod Drive Control System	3-7
3.5	Control Rod Position Indication	3-9
3.6	Control Rod Drive Cooling Water System	3-9

CONTENTS (Cont'd)

		Page
4.	OPERATIONAL EXPERIENCE - B&W AND CE	4-1
4.1	Introduction	4-1
4.2	Dominant Component Failures	4-4
4.2.1	Combustion Engineering	4-4
4.2.2	Babcock & Wilcox	4-4
4.3	Failure Effect	4-6
4.3.1	Combustion Engineering	4-6
4.3.2	Babcock & Wilcox	4-6
4.4	Specific Component Failures	4-9
4.4.1	Control Rod Drive Mechanisms	4-9
4.4.2	Control System Failures	4-12
4.4.3	Rod Position Indication Failures	4-14
4.4.4	Human Error	4-16
4.4.5	Potential for Loose Parts	4-19
4.4.6	Miscellaneous	4-20
5.	SUMMARY AND CONCLUSION	5-1
5.1	Conclusions	5-1
5.1.1	Combustion Engineering CEDS	5-1
5.1.2	Babcock & Wilcox CRDS	5-2
5.2	Future Work	5-2
6.	REFERENCES	6-1
APPENDIX A.	SUMMARY OF LICENSEE EVENT REPORTS FOR COMBUSTION ENGINEERING - CONTROL ELEMENT DRIVESYSTEM	A-1
APPENDIX B.	SUMMARY OF LICENSEE EVENT REPORTS FOR BABCOCK & WILCOX - CONTROL ROD DRIVE SYSTEM	B-1

LIST OF FIGURES

No.		Page
1.1	Number of CE plants per age category	1-2
1.2	Number of B&W plants per age category	1-3
1.3	CE NPAR system boundary	1-5
1.4	B&W NPAR system boundary	1-6
2.1	CE magnetic jack CEDM	2-3
2.2	Extension shaft assembly	2-7
2.3	CE rack and pinion CEDM	2-8
2.4	CE reed switch position transmitters	2-10
2.5	CE CEDM power and logic block diagram	2-11
3.1	B&W roller nut CRDM	3-4
3.2	B&W CRD control system	3-8
4.1	CE LER frequency comparison	4-3
4.2	B&W LER frequency comparison	4-3
4.3	CED system aging fraction	4-5
4.4	CRD system aging fraction	4-5
4.5	Effects of failure on CED system	4-7
4.6	CE significant plant effects	4-7
4.7	Effect of failure on CRD system	4-8
4.8	B&W significant plant effects	4-9
4.9	CE CEDM failures	4-10
4.10	CRDM failures	4-10
4.11	CE control system failures	4-13
4.12	B&W control system failures	4-15
4.13	CE rod position indication failures	4-15
4.14	B&W reed switch comparison	4-17
4.15	B&W rod position indication failures	4-18
4.16	CE CED related human errors	4-18
4.17	Babcock & Wilcox fuel assembly	4-21

LIST OF TABLES

No.		Page
1.1	CE Plants in NPAR Study	1-1
1.2	B&W Plants in NPAR Study	1-2
1.3	B&W and CE CRD System History	1-7
2.1	CE Control Element Design Data	2-2
2.2	CE Magnetic Jack CEDM Typical Materials	2-4
3.1	B&W Control Rod Assembly Data	3-2
3.2	B&W Axial Power Shaping Rod Assembly Data	3-3

ACKNOWLEDGEMENT

The authors wish to thank our NRC technical monitor Satish Aggarwal for his support, input and guidance.

Acknowledgement is also given to our colleagues in the Engineering Technology Division, especially Robert Hall, John Boccio, John Taylor, Mano Subudhi and Ken Sullivan. Their technical input to this continuing effort has been most helpful. The efforts of Helen Todosow and the staff of the Nuclear Safety Library are also appreciated.

We also wish to acknowledge Donna Storan, Susan Monteleone and Ann Fort for excellent manuscript preparation.

1. INTRODUCTION

Control rods, and the associated drive and control systems, are essential components of nuclear reactors which insure safe and reliable operation. This engineering study describes these components and operating experience for both Combustion Engineering (CE) and Babcock & Wilcox (B&W) reactors. Emphasis is placed on the specific components which may be susceptible to aging related degradation.

This engineering study will describe the progress made towards the completion of a Phase I aging assessment for the B&W and CE Control Rod Drive (CRD) Systems.

1.1 Background

Fifteen plants use Combustion Engineering designed control element drive systems (Table 1.1). The number of plants per age category is shown in Figure 1.1. These plants vary from the newest, Palo Verde 3 with 2 years of operation, to Palisades with 18 years. All plants utilize a magnetic jack control element drive mechanism except Palisades and Fort Calhoun, which use a rack and pinion drive. Likewise, all CE plants use control element rods to regulate reactivity with the exception of Palisades, which uses a cruciform type of control element. The actual number of control element drive's used is a function of reactor size, varying from 37 to 91. The logic, control, and rod position systems are basically the same for all CE reactors.

Table 1.1. Combustion Engineering Plants in NPAR Study

I. Less than 5 years of operation (2)

Palo Verde 2
Palo Verde 3

II. 5 to 10 years of operation (5)

Palo Verde 1
San Onofre 2
San Onofre 3
St. Lucie 2
Waterford 3

III. 10 to 15 years of operation (3)

ANO-2
Calvert Cliffs 2
St. Lucie 1

IV. 15 to 20 years of operation (5)

Calvert Cliffs 1
Fort Calhoun
Maine Yankee
Millstone 2
Palisades

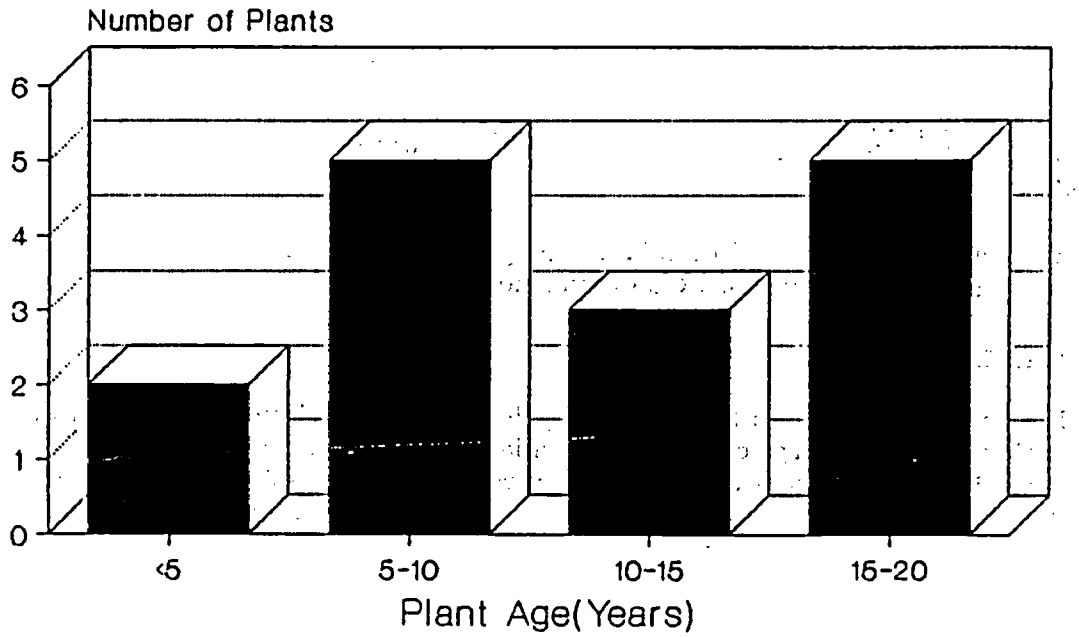

Figure 1.1. Number of CE plants per age category.

Table 1.2 lists the eight plants which use a Babcock & Wilcox designed control rod drive system. Even though there are fewer plants compared to CE, these plants are older, on the average, (Figure 1.2) varying from Davis Besse with 13 years of operation to Oconee 1 with 17 years. All of the B&W plants utilize control rods driven by a roller nut/leadscrew drive mechanism. The logic, rod position information, and control systems for all B&W plants are similar.

Table 1.2. Babcock & Wilcox Plants in NPAR Study

I. Ten to fifteen years of operation (2)

Crystal River
Davis Besse

II. Fifteen to twenty years of operation (6)

Arkansas - 1
Oconee - 1
Oconee - 2
Oconee - 3
Rancho Seco
Three Mile Island - 1

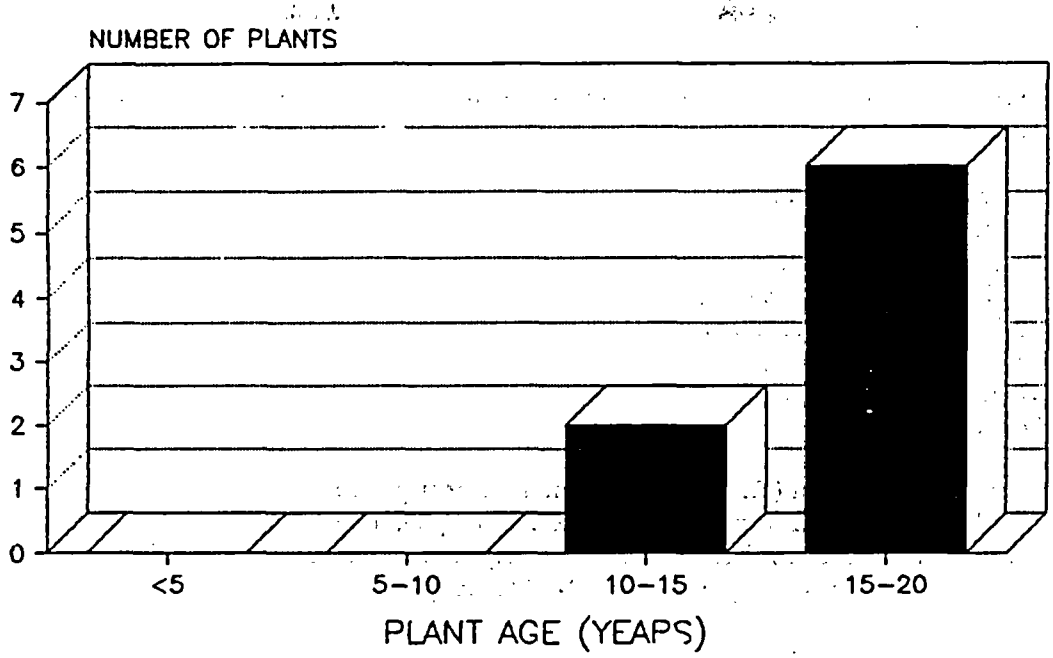

Figure 1.2. Number of B&W plants per age category.

1.2 Objectives

The main objectives of this engineering study were to:

1) identify aging and service wear effects which could degrade the system and in turn affect overall plant safety, and

2) evaluate operating experience including maintenance practices to identify aging of components.

To complete these objectives, the following tasks were completed for both the B&W and CE systems:

a) The system designs, including drive mechanisms, rod design, and all applicable reactor interfaces (the guide structures in the upper plenum and fuel assembly guide tubes) were reviewed in detail.

b) The operating and maintenance experience for both designs by assessing the operating information from commercial databases.

c) Preliminary conclusions regarding the effect of aging on the CRD system and related component failures were provided.

1.3 System Boundary

The system boundaries applicable to this study are shown in Figures 1.3 and 1.4. The items included are:

- control rod drive mechanisms,
- rod control systems,
- power and logic systems,
- rod position indication systems,
- upper internal guide structures,
- fuel assembly guide tubes,
- individual control rods, and
- CRD cooling systems.

The reactor protection system (RPS), including the reactor trip breakers, are important to overall plant safety. Signals from the RPS cause the breakers to open, thus removing power from the drive mechanisms allowing the control rods to insert freely into the core under the influence of gravity. This vital system was addressed by a separate NPAR study.

1.4 Analysis Methodology and Report Format

As reactor years of operation increased, a need developed to assess the effects of plant aging on safety. The Director of the Office of Nuclear Reactor Regulation of the U.S. Nuclear Regulatory Commission (NRC) identified this need, and the Nuclear Plant Aging Research (NPAR) Program was developed by the Office of Nuclear Regulatory Research to assess this. The technical and safety issues of the Program, as well as the potential use of the results are described in NUREG-1144.[1] The components and systems to be evaluated by the Program are also defined.

This study provides an engineering assessment of the system and operating experience for both CE and B&W designed CRD systems. Together with an ongoing assessment of individual utility maintenance and operating practices, this report will be issued as a formal Phase 1 aging assessment, in accordance with the guidelines of the NPAR Program Plan and Brookhaven National Laboratory's (BNL) Aging and Life Extension Assessment Program (ALEAP) Systems Level Plan.[2] As described in these reports, a formal Phase 1 Control Rod Drive system study would include:

a) detailed evaluation of operating experience data,
b) analysis of industrial maintenance and operating information,
c) identification of failure modes, effects, and causes,
d) review of design, operating environment, and performance requirements.

A similar Phase I aging assessment for the Westinghouse Control Rod Drive System was recently completed by BNL.[3]

To meet the objectives as defined in Section 1.2, it was necessary to understand the system's operating characteristics, materials and design function. Information was obtained from Final Safety Analysis Reports, technical reports and system descriptions. This data is presented in Section 2.0 for Combustion Engineering, and in Section 3.0 for Babcock & Wilcox.

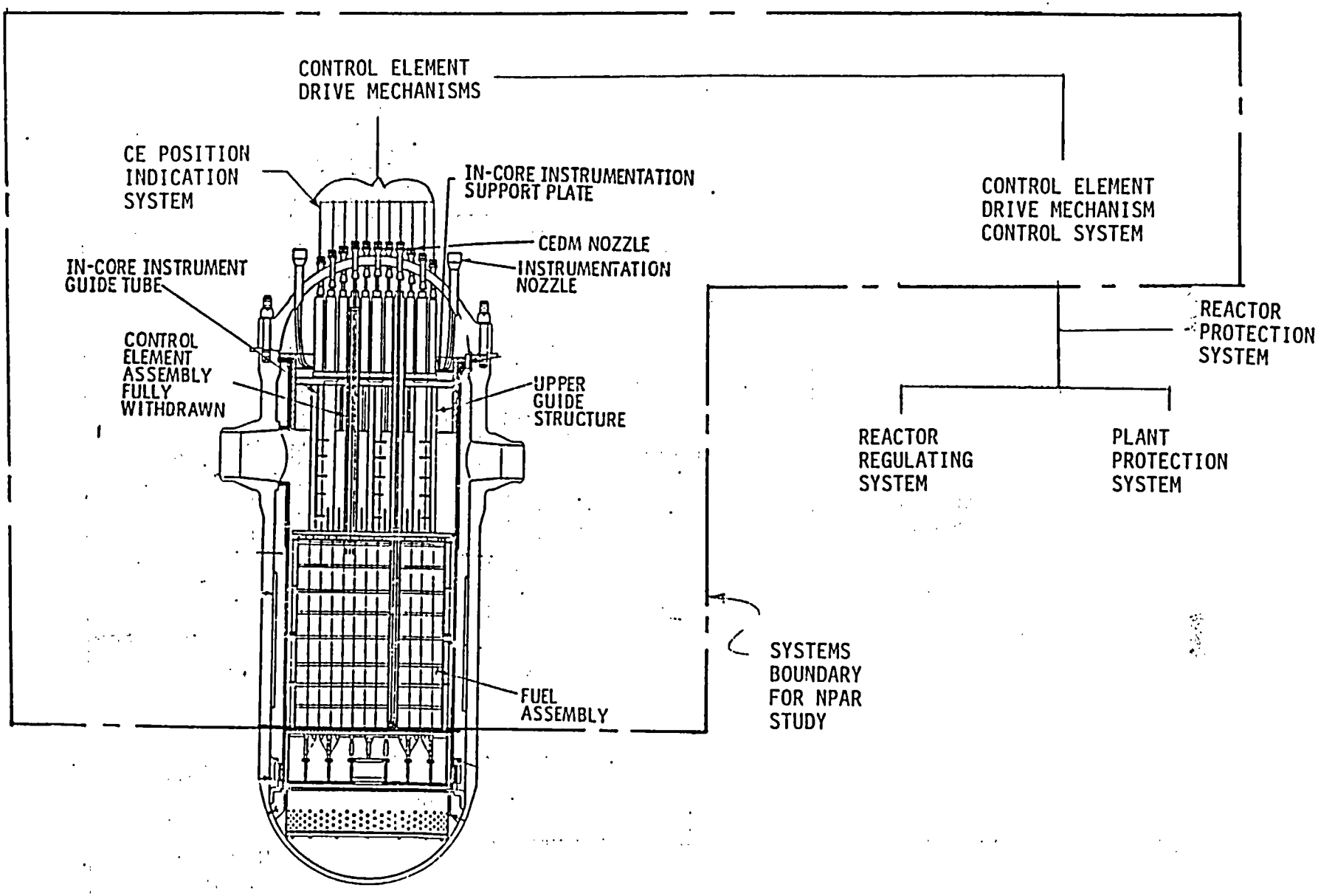

Figure 1.3. CE NPAR system boundary.

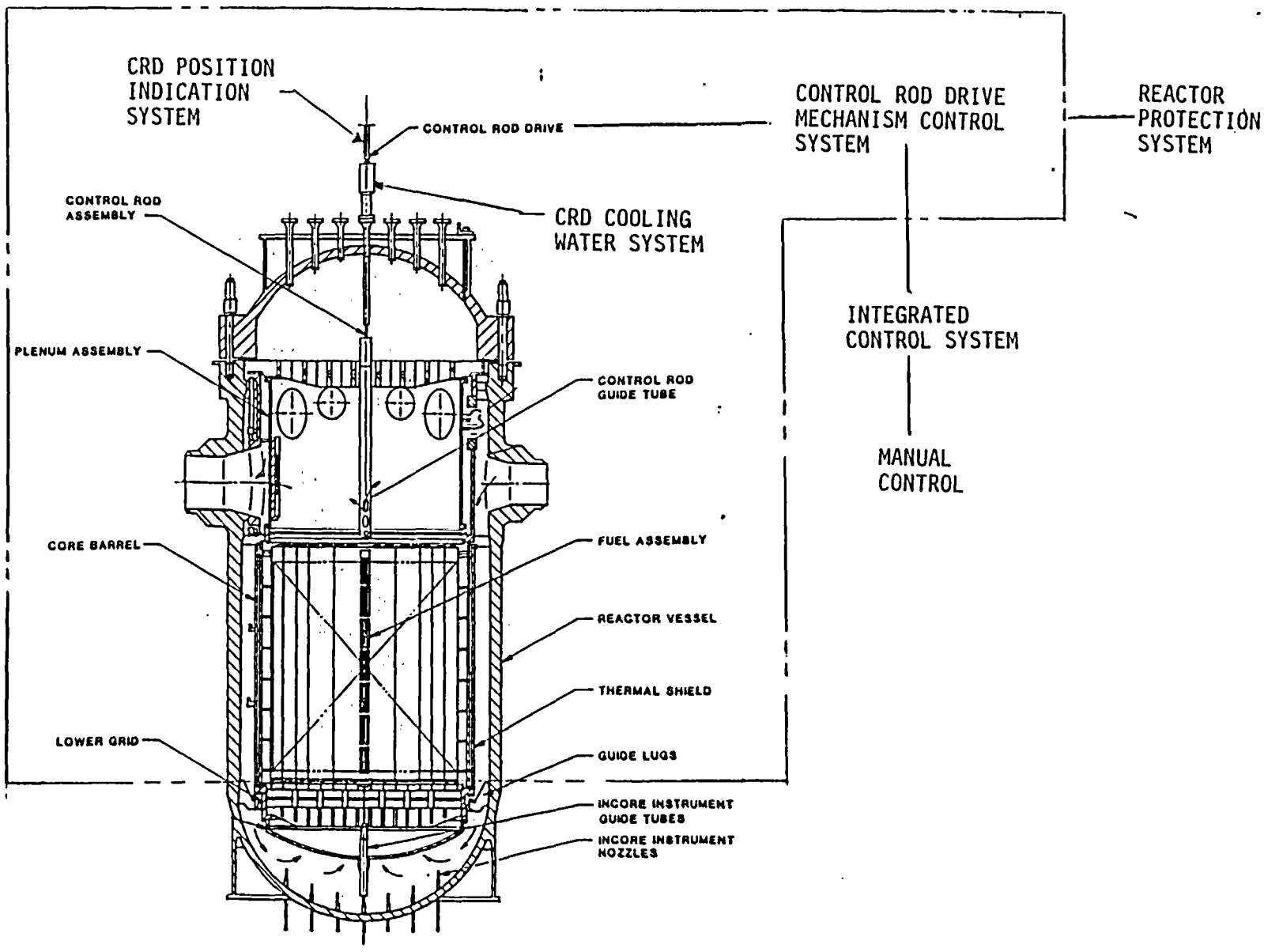

Figure 1.4. B&W NPAR system boundary.

Three commercial databases were reviewed to obtain information on significant operating and maintenance events from 1980 to 1989 in order to identify component failures due to aging. These databases were:

- Nuclear Plant Reliability Data System (NPRDS),
- Nuclear Power Experience (NPE), and
- Sequence Coding and Search System (SCSS).

Detailed information on these three databases is provided in Section 4.0, together with an assessment of the aging effect for each design, including detailed discussions on the aging effects of the major components or systems. Specific LER's are presented in the Appendix, sorted into major system or component affected, LER No., age at failure, and a brief description of cause and effect.

The B&W and CE control rod drives have experienced failures which have been the subject of several NRC Information Notices. These are shown on Table 1.3, and are discussed in detail in Section 4.0.

Table 1.3. B&W and CE Control Rod Drive System History

Year	Reference	Component	Aging Concern
1985	IN 85-38	CRDM	Loose parts prevent rod movement.
1986	IN 86-108	CEDM Housing and Flanges	Primary coolant leakage causing corrosion and blockage of CEDM cooling ducts.
1988	IN 88-47	Rod Control System	Slower than expected rod drop times.

1.5 Future Work

As described in Section 1.2, a review of utilities maintenance and inspection practices is on-going. A detailed survey requesting specific information on types of inspections, their frequency, and maintenance for major specific components for the control rod drive system has been sent to the operating utilities via the Equipment Qualification Advisory Group.

The results of the survey will be reviewed, together with the conclusions of this study, to make specific findings on the assessment of system aging, and methods to mitigate its effect on plant safety. A detailed Failure Mode and Effects Analysis (FMEA) or an equivalent study will also be performed to summarize which component failures lead to specific system or plant effects, and to qualitatively rank the potential safety significance of the event.

2. DESCRIPTION OF THE COMBUSTION ENGINEERING CONTROL ELEMENT DRIVE SYSTEM

2.1 Introduction

Reactivity control in a Combustion Engineering (CE) reactor is provided by two independent systems, the Control Element Drive System (CEDS) and the Chemical and Volume Control System (CVCS). The CEDS positions the individual control element assemblies (CEA) within the core to control short term reactivity changes. This system is also capable of producing a rapid reactor shutdown through the rapid insertion of the control elements. This section briefly describes the major components of the CE system which are being evaluated in this study. Additional system details will be provided in the Phase I NUREG/CR report.

The major components of the control element drive system which are included in this study are:

- Control Element Assemblies (CEA),
- Control Element Drive Mechanism (CEDM),
- Control Element Drive Mechanism Control System (CEDMCS),
- CEA Position Indication Systems,
- CEDM Cooling System.

2.2 Control Element Assemblies (CEA)

CE reactors utilize a combination of full and part length control elements to control reactivity. The typical CEA consists of five poison rods attached to a spider structure. The rods are assembled in a square array with one center rod. The spider assembly allows for coupling to a individual CEDM. The design data for the typical full and part length control elements is summarized in Table 2.1.

Palisades, in lieu of the rod type control elements, uses cruciform type control blades which are fabricated from rectangular stainless steel tubes containing Ag-In-Cd poison. Since these cruciform control blades are located in the channels between fuel assemblies, solid Zircaloy-4 guide bars located on the perimeter of the fuel assemblies, are used, instead of guide tubes.

2.3 Control Element Drive Mechanism (CEDM)[5]

The Control Element Drive Mechanisms (CEDM) vertically position and provide position indication for the CEA's within the reactor. The typical CEDM is a magnetic jack type design, however, two plants utilize a rack and pinion type. Each CEDM is capable of withdrawing, inserting, holding or tripping a CEA from any position in the core.

A typical CEDM is shown in Figure 2.1. Table 2.2 lists the individual component materials.

Table 2.1. Control Element Design Data[4]

Control Element	Full Length	Part Length
Number (Typ)	73	8
No. of Elements Per Assy.	5	5
Clad Material	Inconel 625	Inconel 625
Clad Thickness (in.)	.035	.035
Clad O.D. (in.)	.816	.816
Center Element		
•Poison Material	B_4C	Inconel 625/ Water/B_4C
•Length (in.) (Typ.)	146	75/58/16
Corner Elements		
•Poison Material	B_4C/Ag-In-Cd	Inconel 625/ Water/B_4C
•Length (in.)	135.5/12.5	75/58/16
Fuel Assembly Guide Tube		
•Material	Zircaloy-4	Zircaloy-4
•ID (in.)	.90	.90

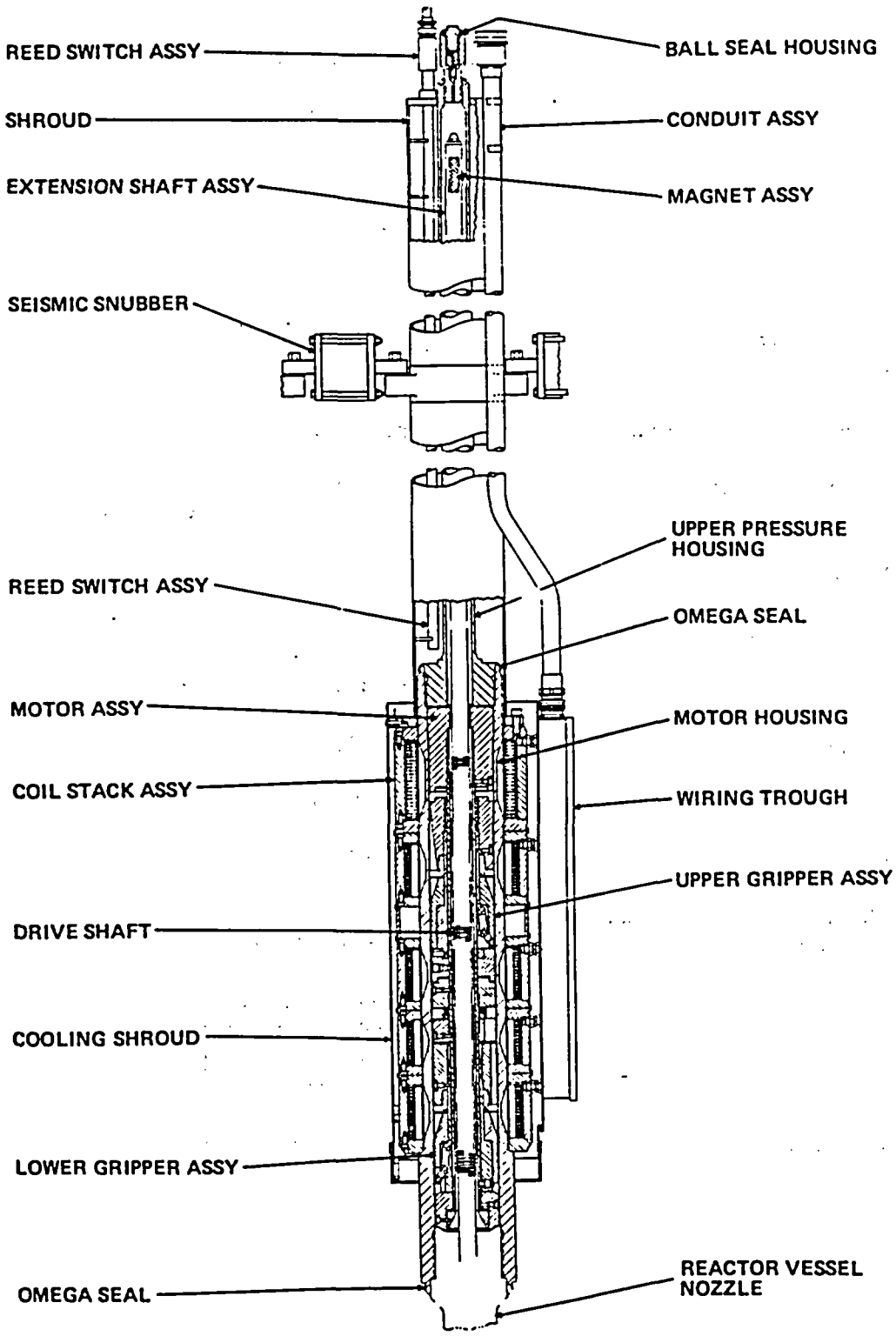

Figure 2.1. Combustion Engineering magnetic jack control element drive mechanism.

Table 2.2. Typical Materials

Magnetic Jack Type CEDM[6]

Component	Material
1) Motor Housing Assembly	
•Pressure Housing	Type 403 Stainless Steel
•End Fittings	Nickel-Chromium-Iron Alloy
2) Upper Pressure Housing	Type 316 Stainless Steel
•Vent Valve Seal	Type 440 Stainless Steel Ball/Type 316 Stainless Steel Seat
3) Motor Latches, Links, Pins	High Cobalt Alloy
4) Motor, Extension Shaft Springs	Inconel X-750
5) Motor Magnet	Type 410 Stainless Steel
6) Motor Fasteners	Type 304 Stainless Steel
7) Extension Shaft	Type 304 Stainless Steel
8) Extension Shaft Magnet	Alnico No.5
9) Motor and Extension Shaft Wear Surfaces	Chromium Plated
10) Magnet Coils	Copper wire insulated with high temp. enamel, vacuum impregnated with high temp. varnish. Fiberglass taped and encapsulated with silicone.
11) Coil Housings	Nickel Plated Carbon Steel

The main components of the CEDM are:

a) Upper and lower pressure housings,
b) Motor assembly,
c) Coil stack assembly,
d) Reed switch assembly,
e) Extension shaft assembly.

Normally, each CEA has a dedicated CEDM. However, depending upon plant size and design, the number of control elements per assembly can vary from 4 to 12. The design life for the CEDM is 40 years; it is designed to operate without maintenance for one and one-half years and without component replacement for a minimum of three years.

- CEDM Pressure Housings.

  The CEDM pressure housings consist of the motor and upper pressure housing assemblies.

  The motor assembly pressure housing is attached to the reactor vessel head by a threaded joint which is seal welded in place. It need not be removed, since any servicing is performed from the top of the housing.

  The upper pressure housing is threaded and welded onto the motor assembly housing. It encloses the CEDM extension shaft and vent, and is sealed at the top by a threaded cap and welded Omega seal.

- Motor Assembly.

  The motor assembly is an integral unit which fits into the pressure housing. The major components are the latch guide tube and the driving and holding latches.

  The major CEA stepping is performed by the driving latches, while the holding latches hold the CEA during repositioning of the drive latch. The holding latches also minimize wear on the latch and extension shafts by performing a load transfer function during CEA movement.

  Engagement of the latches with the extension shaft occurs when the appropriate set of magnetic coils are energized. This moves the sliding magnets, which cam a two bar linkage, causing the latches to move inward. The driving latches move vertically 3/4 inch, while the holding latches move vertically 1/16 inch to perform the load transfer.

- Coil Stack Assembly.

  The coil stack assembly consists of five large DC magnet coils mounted on the outside of the motor housing assembly. The coils supply the magnetic force which activates the mechanical latches and engages the extension shaft. Two separate power supplies service the coils. A conduit assembly containing the leads for the coil stack assembly is located on the side of the upper pressure housing assembly.

- Reed Switch Assembly.

  The reed switch assembly transmits indications of individual CEA positions. The reed switches are actuated by a permanent magnet attached to the top of the extension shaft. Electrical connectors for the reed switches are provided at the top of the upper pressure housing. Three additional pairs of reed switches on each CEDM provide indications of the upper and lower electrical limits as well as a dropped rod.

- Extension Shaft Assembly.

  The extension shaft assembly, (Figure 2.2), couples the CEDM to the CEA. At the top of the extension shaft is a housing containing the permanent magnet which activates the reed switches as well as a coupling for the lifting tool. The lifting tool is used for engaging or disengaging the CEA from the extension shaft. The center portion of the assembly is the drive shaft which is a long stainless steel tube with circumferential notches to engage the CEDM. The drive shaft is pinned to the extension shaft.

2.3.1 CEDM Design Variations

A more recent CEDM design is referred to as the System 80 CEDM. It is similar to the standard magnetic jack device, with the following exceptions:

1) the elimination of the pulldown coil, and
2) the use of the lift coils to perform both the load transfer and stepping functions.

Two plants use rack and pinion type of CEDMs as opposed to the typical magnetic jack type (Figure 2.3). This CEDM, has a drive shaft running parallel to the rack which drives the pinion gear through a set of bevel gears. The trippable CEA is driven by an electric motor operating through a gear reducer and magnetic clutch, which when de-energized, allows the CEA to drop into the reactor. The magnetic clutch incorporates an anti-reversing device which prevents the CEA from moving upward when the clutch is de-energized.

The main components of this CEDM are:

- CEDM Pressure Housing
- Rack and Pinion Assembly
- Motor Drive Package
- Position Readout Equipment
- Extension Shaft Assembly.

2.4 CEA Position Indication System

Position indication for each CEA is provided by two separate systems, the pulse counting and the reed switch position indication systems.

The pulse counting CEA position indication system infers each CEA position by maintaining a record of the control pulses sent to each CEDM to either raise or lower the CEA. This system is incorporated into the plant computer which feeds the control board digital displays. One display provides CEA group information, while the other provides information on individual CEA position.

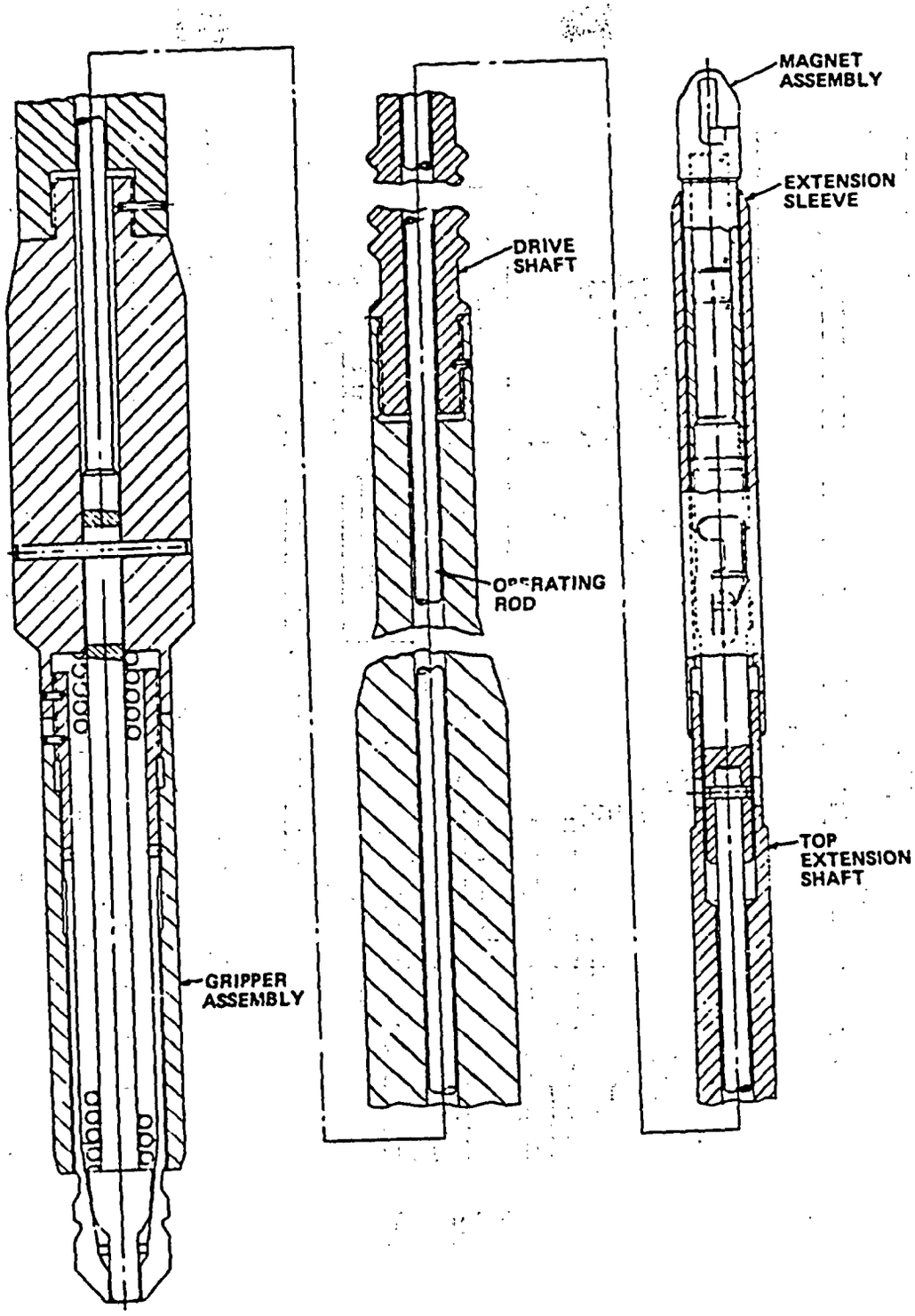

Figure 2.2. Extension shaft assembly.

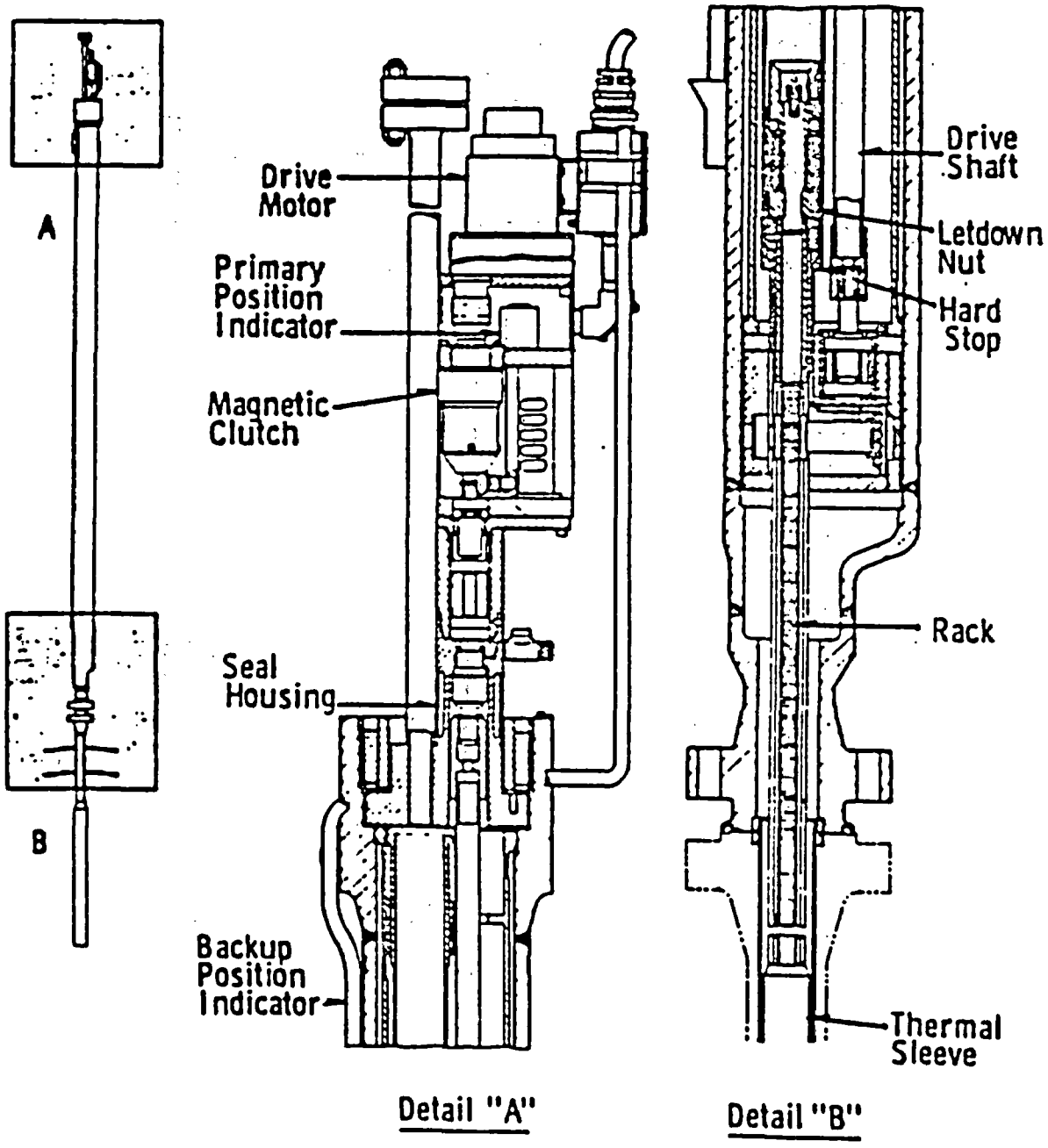

Figure 2.3. Combustion Engineering rack and pinion CEDM.[7]

The reed switch CEA position indication system uses a series of magnetically actuated reed switches to provide electrical signals representing position. Two independent reed switch position transmitters (RSPT) are provided for each CEA as shown on Figure 2.4. The RSPT provides an analog position indication signal and three physically separate, discrete, reed switch position signals.

2.5 Control Element Drive Mechanism Control System

The Control Element Drive Mechanism Control System (CEDMCS) receives automatic CEA motion demand signals from the Reactor Regulating System (RRS), manual motion signals from the CEDMCS control panel, and Plant Monitoring System (PMS) sequencing signals, which transmit DC pulses to the CEDM coils causing CEA motion. A reactor trip caused by the Reactor Protection System (RPS) causes power to be removed from the CEDMCS by the trip switchgear, which causes all CEAs to be inserted by gravity.

The CEDMCS has been designed such that no credible single electrical component failure will result in the drop of more than one CEA/PLCEA subgroup. This design is based upon a subgroup in which all members are symmetrically located with their CEDM coil power switches physically sharing the same module, with the following logics dedicated on a subgroup basis:

1) CEDM coil sequencing and timing logic,
2) Individual CEA motion permissive logic,
3) Coil voltage control circuiting,
4) CEDM coil power switch SCR actuation and control logic.

Figure 2.5 is a block diagram showing the CEA/PLCEA power switch and control logic relationships. The major design features of this system are:

- redundant auctioneered logic power supplies,
- separate logic for each subgroup,
- an auxiliary logic power supply to supply power to hold logic upon loss of main logic power supplies,
- subgroup power switches housed in two separate assemblies, and
- main power bus supply power to 10 subgroups, 8 which contain regulating or shutdown CEAs.

2.6 CEDM Cooling System

Though not considered a safety related system, the CEDM cooling system is necessary to ensure the continuous and reliable operation of the CEDM's. Typically, the system is a forced air cooling system consisting of two to four fans, designed to maintain the CEDM coils at a temperature below 350°F. The cooling system is controlled and monitored remotely from the control room.

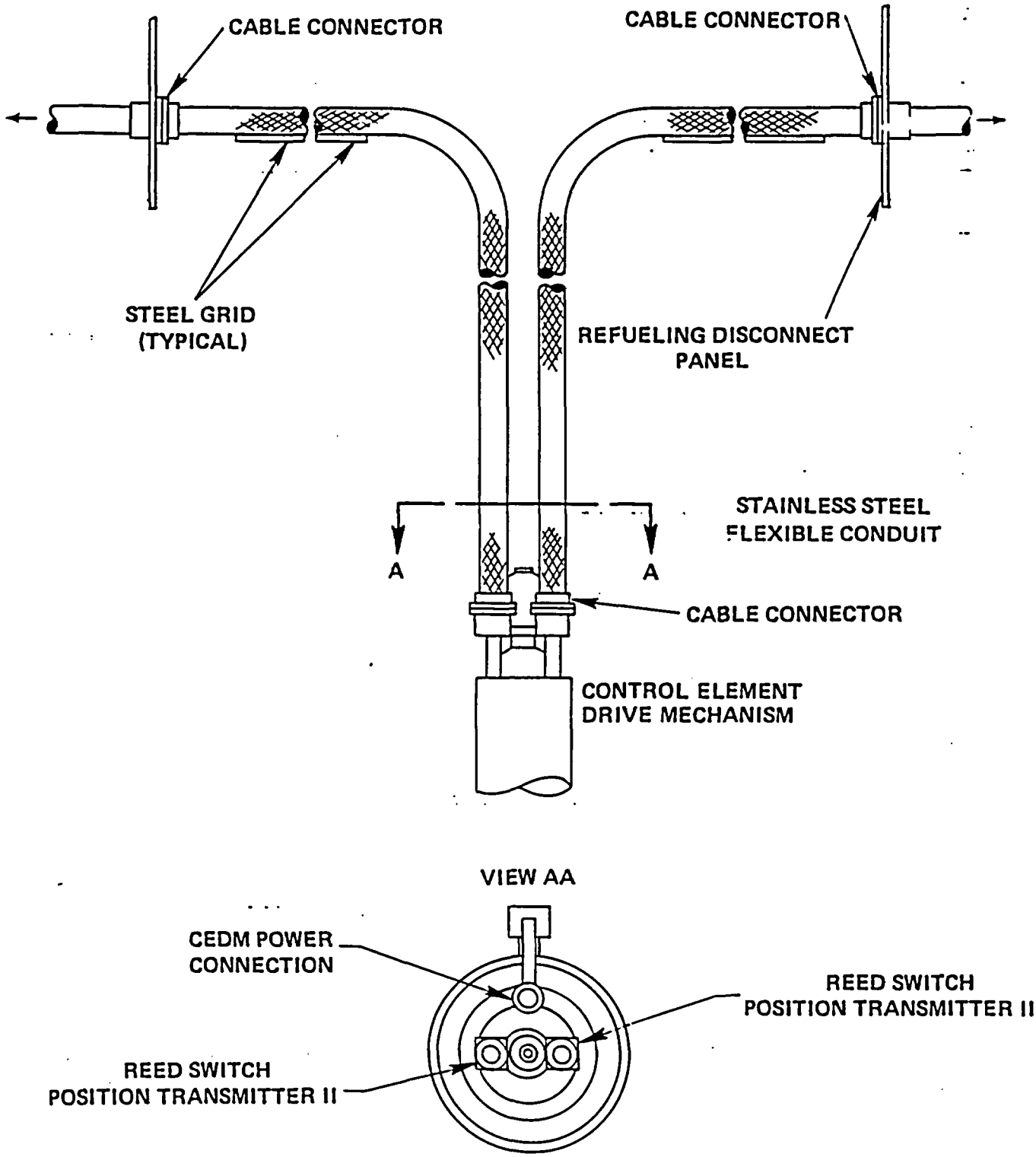

Figure 2.4. Combustion Engineering reed switch position transmitters.[7]

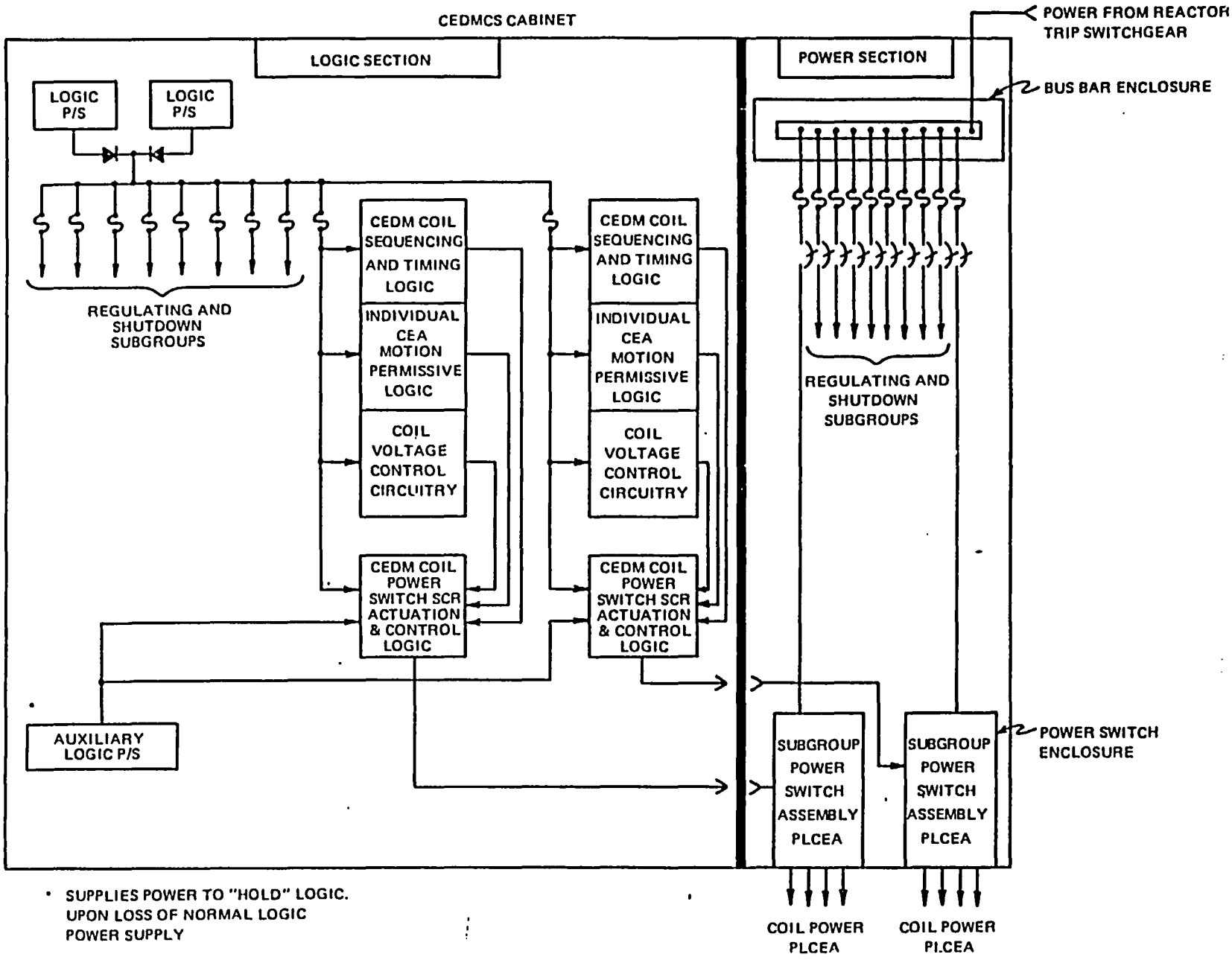

Figure 2.5. CE CEDM power and logic block diagram.[8]

3. DESCRIPTION OF THE BABCOCK & WILCOX CONTROL ROD DRIVE SYSTEM

3.1 Introduction

In a Babcock & Wilcox (B&W) reactor, reactivity is controlled by the Control Rod Drive System (CRDS) and the Makeup and Purification System. The CRDS positions the moveable control rod assemblies (CRA) in the core to control the relatively fast reactivity effects. This system also allows the control rod assemblies to be inserted rapidly in response to signals from the RPS to produce a rapid reactor shutdown. This section briefly describes the major components of the B&W system which are being evaluated in this study. The major system components are:

- Control Rod Assemblies (CRA),
- Control Rod Drive Mechanism (CRDM),
- Control Rod Drive Control System (CRDCS),
- CRA Rod Position Indication, and
- Control Rod Drive Cooling Water System.

Additional system details will be provided in the Phase I NUREG/CR report.

3.2 Control Rod Assemblies (CRA)

B&W reactors utilize a combination of control rod assemblies (CRA's) and axial power shaping rod assemblies (APSRA's) to control reactivity. The typical CRA consists of either sixteen or twenty-four poison rods attached to a spider structure. The spider assembly allows for coupling to a CRDM. Design data for the typical control rod is summarized in Table 3.1. The extended life design uses Inconel clad as opposed to the thinner wall stainless steel tubing. It is also pre-pressurized with helium to reduce clad stresses. Table 3.2 summarizes the typical design data for the axial power shaping rods (APSR). The recently designed "Gray" APSR utilizes a longer Inconel absorber section and is pressurized with Helium to reduce differential pressure stresses in the clad.

3.3 Control Rod Drive Mechanisms (CRDM)

The Control Rod Drive Mechanism both vertically position and provides position indication for the CRA's within the reactor. The CRDM's are sealed, reluctance motor driven screw units, as shown on Figure 3.1.

The main components of the CRDM are:

a) Motor tube,
b) Motor,
c) Vent Valve,
d) Leadscrew,
e) Rotor Assembly
f) Torque Tube and Torque Taker,
g) Snubber Assembly,
h) Leadscrew Guide,
i) Position Indicators.

Table 3.1. Control Rod Assembly Data[9]

ITEM	DATA
Number of CRA	53-61 (Dependant upon core design)
Number of Control Rods per Assembly	16
Outside Diameter of Control Rod, in.	0.440
Cladding Thickness, in.	0.021
Cladding Material	Type 304 SS, Cold-Worked
End Plug Material	Type 304 SS, Annealed
Spider Material	SS, Grade CF3M
Poison Material	80% Ag, 15% In, 5% Cd
Femal Coupling Material	Type 304 SS, Annealed
Length of Poison Section, in.	134
Stroke of Control Rod, in.	139

Control Rod Assembly Data - Extended Life Design

ITEM	DATA
Number of CRA	53-61 (Dependant upon core design)
Number of Control Rods per Assembly	16
Outside Diameter of Control Rod, in.	0.441
Cladding Thickness, in.	0.0225
Cladding Material	Inconel
End Plug Material	Inconel
Spider Material	SS, Grade CF3M
Poison Material	80% Ag, 15% In., 5% Cd
Female Coupling Material	Type 304 SS, Annealed
Length of Poison Section, in.	139
Stroke of Control Rod, in.	139

Table 3.2. Axial Power Shaping Rod Assembly Data - Black[10]

ITEM	DATA
Number of Axial Power Shaping Rod Assemblies	8
Number of Axial Power Shaping Rods per Assembly	16
Outside Diameter of Axial Power Shaping Rod, in.	0.440
Cladding Thickness, in.	0.021
Cladding Material	Type 304 SS, Cold-Worked
Plug Material	Type 304 SS, Annealed
Poison Material	80% Ag, 15% In, 5% Cd
Spider Material	SS, Grade CF3M
Female Coupling Material	Type 304 SS, Annealed
Length of Poison Section, in.	36
Stoke of Rod, in.	139

Axial Power Shaping Rod Assembly Data - Gray

Number of Axial Power Shaping Rod Assembly	8
Number of Axial Power Shaping Rods Per Assembly	16
Outside Diameter of Axial Power Shaping Rod, in.	0.440
Cladding Thickness, in.	0.027
Cladding Material	Type 304 SS, Cold-Worked
Plug Material	Type 304 SS, Annealed
Spider Material	SS, Grade CF3M
Poison Material	Inconel
Female Coupling Material	Type 304 SS, Annealed
Length of Poison Section, in.	63
Stroke of Control Rod, in.	139

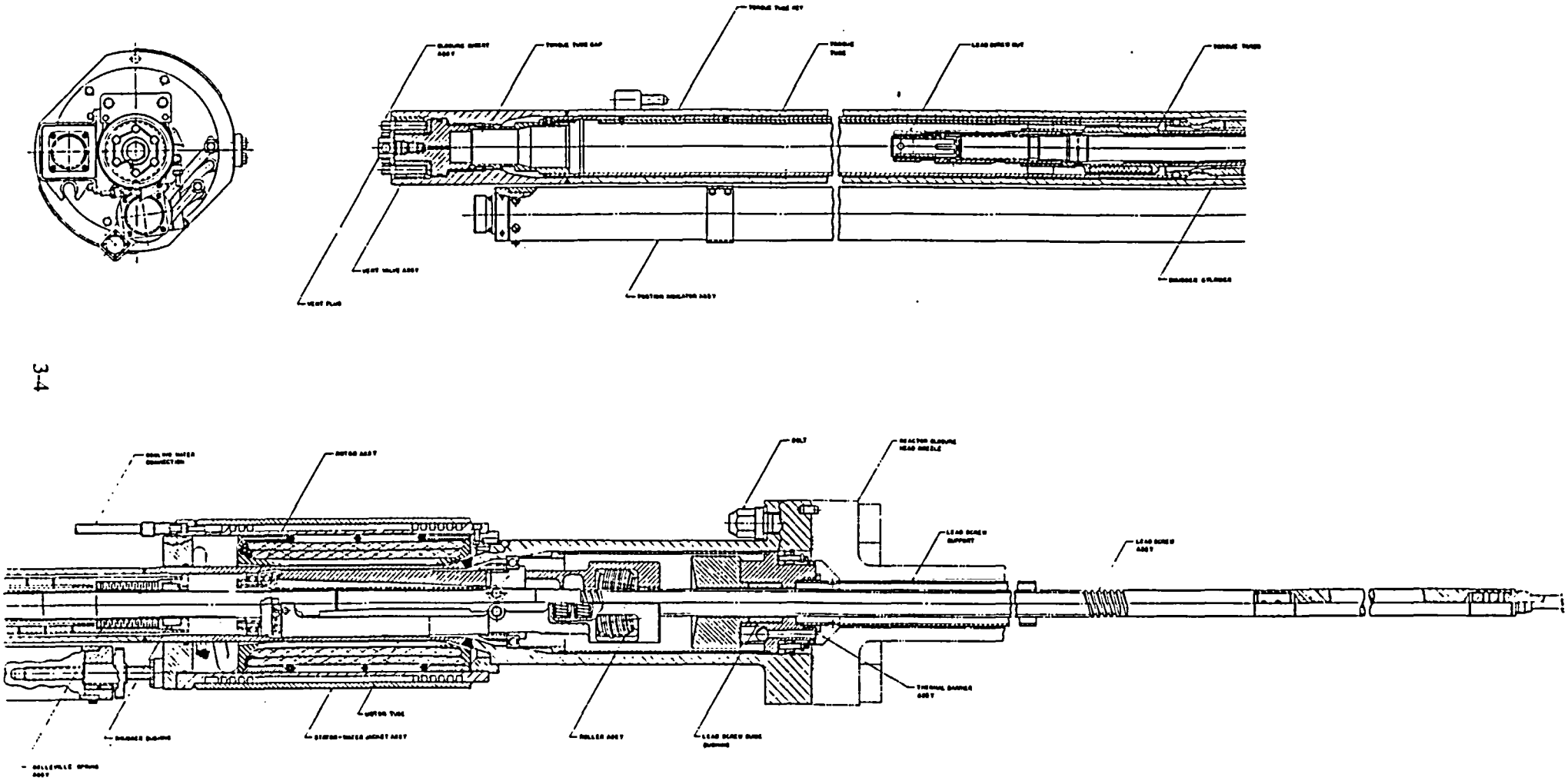

Figure 3.1. B&W roller nut CRDM.[12]

The design life of the B&W CRDM is 126,000 feet of leadscrew axial travel and 500 trip cycles. These values were determined from data taken from operating plants, assuming that the CRDM would be used with regulating rods for 20 years.[11]

- Motor Tube

The motor tube is a 3-piece welded assembly which serves as the main pressure boundary for the CRDM. The tube wall between the rotor assembly and the stator is constructed of magnetic material, which presents a small air gap to the motor, increasing the magnetic coupling to the rotor assembly. This area of the motor tube is fabricated from low alloy steel clad on the I.D. with either Inconel or stainless steel.

The upper end of the motor tube serves as the pressure housing for the withdrawn leadscrew.

It is fabricated from stainless steel which is transition welded to the upper end of the low alloy steel motor section. The lower end of the motor section is welded to a stainless steel forging, which is flanged to mate with the reactor head control rod nozzle. Double gaskets, separated by a ported test annulus, serve as the seal between the CRDM and the reactor vessel.

- Motor

The motor is a synchronous reluctance unit with a slip-on stator. The stator is a 48 slot, 4 pole arrangement, containing cooling water coils in the outside casing. The stator is encapsulated after winding, and is mounted over the motor tube housing. It is 6 phase star connected for operation in a pulse stepping mode, which advances 15 degrees per step.

Previous stator designs used epoxy rather than varnish impregnated encapsulation. Varnish impregnation improves heat transfer and electrical insulation properties. The magnetic properties of the center section have been improved requiring considerable less power to operate. Cooling was improved by the addition of the machined grooves on the casing. Thermocouples monitor stator temperature and alarm should the winding temperature exceed design limits.

- Vent Valve

The upper end of the motor tube is closed by a closure insert assembly consisting of a double sealed vapor bleed port and vent valve. The insert closure is retained by a closure nut which is threaded to the inside of the motor tube. The sealing load for the closure insert is applied by a hydraulically pre-loaded spring washer that is retained by the closure nut.

Removal of the closure and vent assembly permits access to either couple or release the leadscrew assembly from the CRA. The vapor bleed port can bleed all noncondensible gases accumulated in the top of the reactor prior to head removal as well as during reactor coolant fill and heatup.

- Leadscrew

The leadscrew is connected to the CRA by a bayonet coupling. The thread is a modified ACME with a pitch of .375 inch and a relief angle which facilitates disengagement of th oller nut from the leadscrew.

The coupling/uncoupling is accomplished through the use of a special handling tool. To couple a CRA, the leadscrew is lowered until the male bayonet coupling is positioned inside the female coupling of a CRA. At the same time, a pin on the upper portion of the leadscrew is positioned within the torque taker. The leadscrew is rotated 45° by the handling tool, which positions the tabs on the bayonet coupling so that it grapples the CRA. The leadscrew nut on the top of the leadscrew assembly is then tightened in place, preventing any movement relative to the torque taker and CRA. The reverse procedure is employed to uncouple the CRA.

- Rotor Assembly

The rotor assembly consists of a ball bearing supported rotor tube which carries, and limits the travel, of a pair of segment arms. Each of the arms carry a pair of ball bearing supported roiler nut assemblies which are skewed at the appropriate helix angle so to engage the leadscrew. Current in the motor stator causes the arms, which pivot in the rotor tube, to move radially toward the motor tube wall, causing the lower portion of the arms to move inward to the leadscrew and engage the roller nuts. Four separating springs mounted in the segment arms keep the rollers disengaged when power is removed from the stator windings.

A second radial bearing mounted to the upper end of the rotor tube has its outer race pinned to both segment arms, synchronizing their motion during engagement and disengagement.

When a six phase rotating magnetic field is applied to the motor stator, the resulting force produces rotor assembly rotation.

- Torque Tube and Torque Taker

The torque tube is a separate tubular assembly containing a key which extends the full length of the leadscrew. The tube assembly is secured against vertical and rotational movement at the lower end of the closure assembly by a retaining ring, keys, and the insert closure. The lower end of the torque tube houses a hydraulic snubber assembly, which also acts as the down motion stop. The leadscrew contacts the motor tube closure insert assembly for the out motion stop.

The torque taker assembly consists of the permanent magnet for position indication, the snubber piston, and a positioning keyway. It is attached to the top of the leadscrew and has a keyway which mates with the key in the torque tube to provide both radial and tangential leadscrew support.

- Snubber Assembly

The snubber assembly includes a piston which is the lower portion of the torque taker assembly, a hydraulic snubber cylinder, and a belleville spring assembly which is attached to the lower end of the torque tube. The snubber cylinder is closed at the bottom by the leadscrew and the snubber bushing. The snubber cylinder has an active length of 12 inches through which the leadscrew and CRA can be decelerated during a trip without applying a force greater than 10g on the control rod. The snubber damping characteristics are determined by the size and position of holes in the snubber cylinder wall and the water leakage at the snubber piston and bushing. Practical operating clearances limit the amount of water leakage. Therefore, at the end of the snubbing stroke, there is kinetic energy from a 5 ft/sec impact velocity which is absorbed by the belleville spring assembly; absorption is accomplished by a slight, instantaneous overtravel past the normal down stop.

- Leadscrew Guide Assembly

The leadscrew guide assembly has two functions. First, the bushing serves as a thermal barrier and leadscrew guide, and second it allows coolant to flow into the upper motor guide tube area during a trip to replace the volume in the tube formerly occupied by the leadscrew.

As a primary thermal barrier, the bushing allows only a small path for free convection of water between the mechanism and the closure head nozzle, which governs the fluid temperature in the mechanism. To obtain acceptable trip times, an additional flowpath must be provided for coolant around the leadscrew guide bushing. The larger area path is necessary to reduce the pressure differential required to drive water into the mechanism to equal the leadscrew displacement. The auxiliary flow paths are closed for small pressure differentials by ball check valves, which prevent convection flow, but open fully during a trip.

- Rod Position Indication

Two methods of position indication, an absolute and relative position indication system, are provided. The absolute position indication system consists of a series of magnetically operated reed switches which produce an analog voltage signal proportional to rod position. The relative position indication system consist of a small pulse stepping motor connected to a potentiometer which produces a signal corresponding to demanded rod position.

3.4 Control Rod Drive Control System

The Control Rod Drive Control System (CRDCS) provides for the withdrawal or insertion of the CRA's in response to either automatic signals from the Integrated Control System (ICS) or manual signals from the operator. A simplified schematic of the CRDCS is shown in Figure 3.2. The CRDCS also allows the rapid insertion of the CRAs to produce a shutdown upon a signal from the Reactor Protection System. The three main components of the CRDCS are the control rod drive motor power supplies, the system logic, and the trip breakers.

The CRDCS power supplies consist of group auxiliary and holding power supplies. The group and auxiliary power supplies sequentially energize the stators to produce a rotating magnetic field used to position the CRA. The holding power supplies are used to maintain the CRA fully withdrawn, therefore switching is not required.

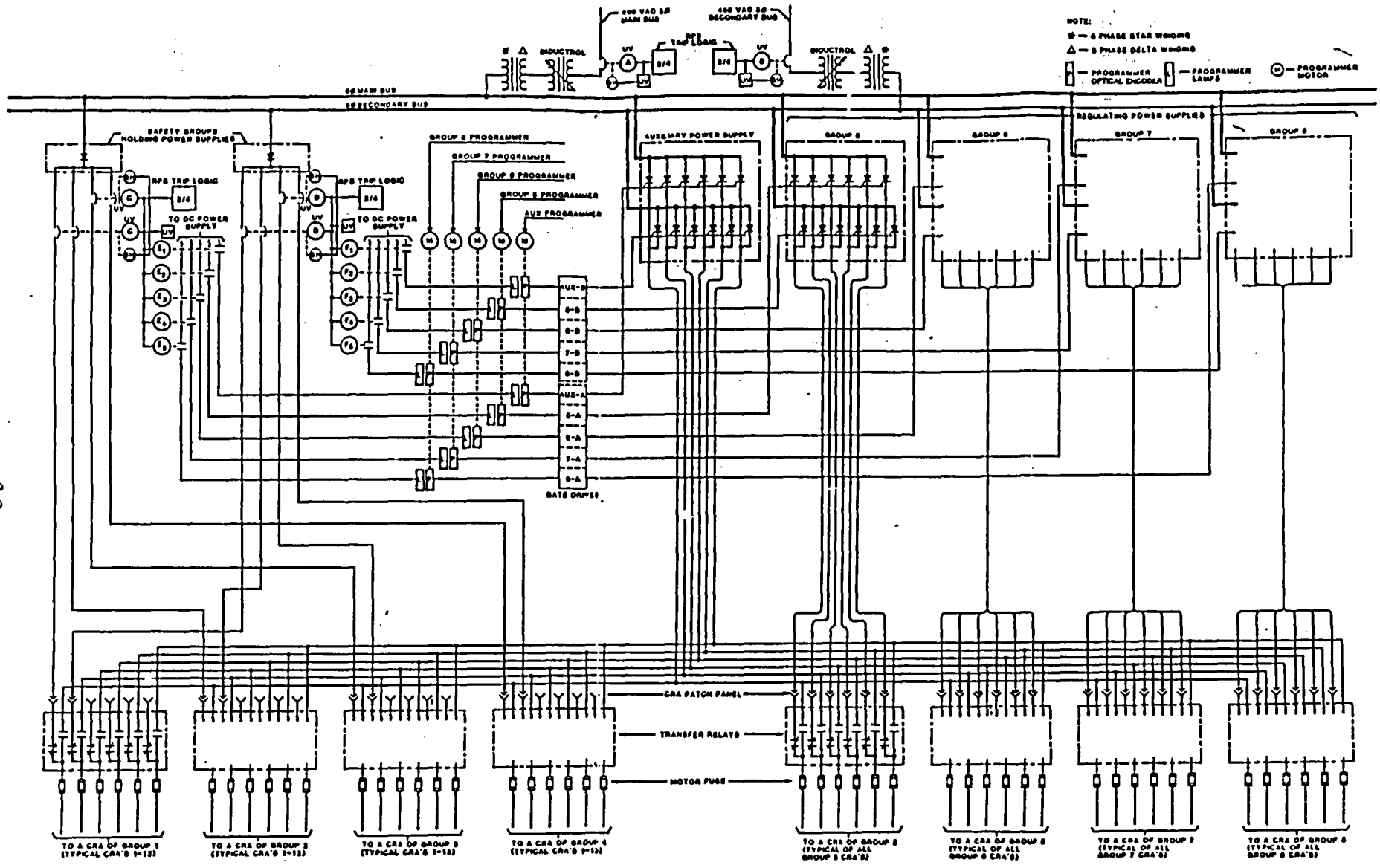

Figure 3.2. B&W CRD control system.(13)

The system logic encompasses the functions which command CRD motion in either the manual or the automatic modes, including CRD sequencing, safety and protection features, and manual trip. The major components of the logic system are:

a) control panel,
b) CRA position indication panels,
c) automatic sequencer which utilizes rod position signals to regulate group position, and
d) relay logic which prohibits out of sequence group movement.

Trip breakers are provided to interrupt power to the control rod drive motors, which allows the roller nuts to disengage from the leadscrew causing the CRA freely insert into the reactor. A trip can be initiated by the RPS breakers or by a power interruption to the SCR gating power and DC holding power circuits. Since parallel power feeds are provided to both the holding and gating power, interruption of both is required for a trip.

The APSRA drive mechanisms are modified to prevent the roller nuts from disengaging and tripping upon power removal.

3.5 Control Rod Position Indication

Position indication for each CRA is provided by two separate systems, the absolute and the relative position indication systems.

The absolute position indication system consists of magnetically operated reed switches mounted in a fiberglass tube parallel to the motor tube extension. Switch contacts close when the permanent magnet, mounted on the upper end of the leadscrew extension passes by. The reed switches are connected to a voltage divider network, which translates varying resistance into position.

The relative position indication system consists of a small, pulse stepping motor which is driven from the power supply for the rod drive motor. The motor drives a potentiometer which produces a variable output corresponding to rod position. Though extremely accurate, the system only reflects rod position from field rotation, and does not provide the correct position indication if the rod is tripped, dropped or immoveable. The system is reset through the use of a reset pulser after a dropped rod or reactor trip, since rod motion was not caused by an electrical signal.

3.6 Control Rod Drive Cooling Water System

The Control Rod Drive Cooling Water System is a closed system consisting of two redundant trains. The major system components are two centrifugal pumps, two heat exchangers, and one surge tank. This system only functions during normal operations.

The separate cooling loops are made entirely of stainless steel, with the exception of the copper-nickel cooler tubes. The latter reduces the concentration of ferrous particles in the cooling water, which limits the potential for flow blockage resulting from the attraction of the ferrous particles by the magnetic field produced by the CRD stator.

4. OPERATIONAL EXPERIENCE - B&W AND CE

4.1 Introduction

A review of the operating and failure histories for the B&W and CE control rod drive systems indicate that both systems have experienced aging resulting in significant plant effects. This data, for the period from 1980 through 1989, was obtained primarily from three national sources of nuclear plant operating experience information:

1) Nuclear Plant Reliability Data System (NPRDS),
2) Nuclear Plant Experience (NPE),
3) Sequence Coding and Search System (SCSS).

The NPRDS is a computerized information retrieval system maintained by the Institute of Nuclear Power Operations (INPO). Information on performance provided by this system is based upon failure event reports of key components submitted by the nuclear utilities to INPO. NPRDS provides access to historical data on engineering failure data reflecting a broad range of operating experience.

The Nuclear Plant Experience (NPE) data base is a commercial technical-publication service which compiles descriptive summaries of significant events and an indexed reference to all such occurrences. Though much of the information in this data base is obtained from the Licensee Event Reports (LER's), NPE also has information from utility operating reports and a wide variety of current literature.

The Sequence Coding and Search System (SCSS), also commonly referred to as the LER data base, provides summaries on all LER's. Each entry into this data base has information on the failed component, the cause of failure (if known), and its effect on plant operation.

Each of the three data bases was searched for operational failure event reports related to the control rod drive systems. Additional queries were made on control rods, guide tubes and reactor internals. Although the three data bases provide, to some extent, duplicate information, a review of all three was required for a thorough search of the operational experiences of the system and its related components. Assurances were made that the events were not double counted, through cross-referencing with the appropriate LER number. The specific LER's for both designs are presented in the Appendices.

Loose parts in the reactor are considered a potential hazard to the CRD system. As such, the Loose Parts category is included since there were several instances where broken fuel assembly components and reactor internals could have potentially interfered with or prevented control rod insertion.

From the data evaluation, the LER's for CE plants were categorized into the following main categories:

1) Cables and Connectors
2) Coil Power Programmer
3) Coil Power Programmer Power Supplies
4) Control Element Drive Mechanism Control System
5) Control Element Drive Mechanism
6) Rod Position Indication
7) Human Error
8) Unknown Causes
9) Miscellaneous

Similarly, LER's for B&W plants were categorized into the following categories:

1) Cable and Connectors,
2) Control Rod Drive Control System,
3) Control Rod Drive Mechanism,
4) Rod Position Indication,
5) Human Error, and
6) Loose Parts.

A comparison between the Sequence Cooling and NPRDS data bases is presented in Figures 4.1 and 4.2 for the CE and B&W designs respectively. For CE plants, the CEDMCS and CRDM subsystems account for the highest frequence of occurrences. Similarly, the CRDCS and CRDM account for the highest frequency for B&W plants.

The differences between the two databases can be explained by the types of events categorized by each. The SCSS provides LER information only. Events occurring during outages are not always reported through LER's. NPRDS provides data from maintenance records, industry literature and LERs also. Therefore, problems found during an outage inspection are likely to be reported in NPRDS. When reporting to NPRDS, categorization is done by each utility, so some variation between plants can be expected. Starting in 1984, utilities were only required to report significant events to INPO, therefore prior occurrences may not have been included in the NPRDS. Utilities typically generate only one LER which can list multiple failures, but usually list each component failure separately on NPRDS. Each database provides useful information in assessing the aging of the CRD systems.

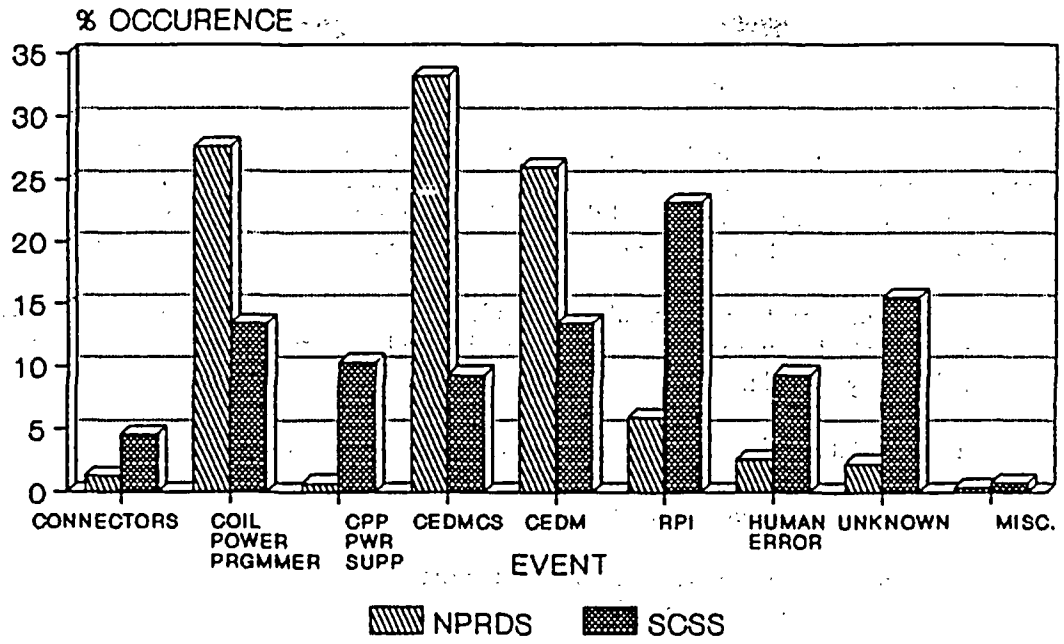

Figure 4.1. CE LER frequency comparison NPRDS-SCSS.

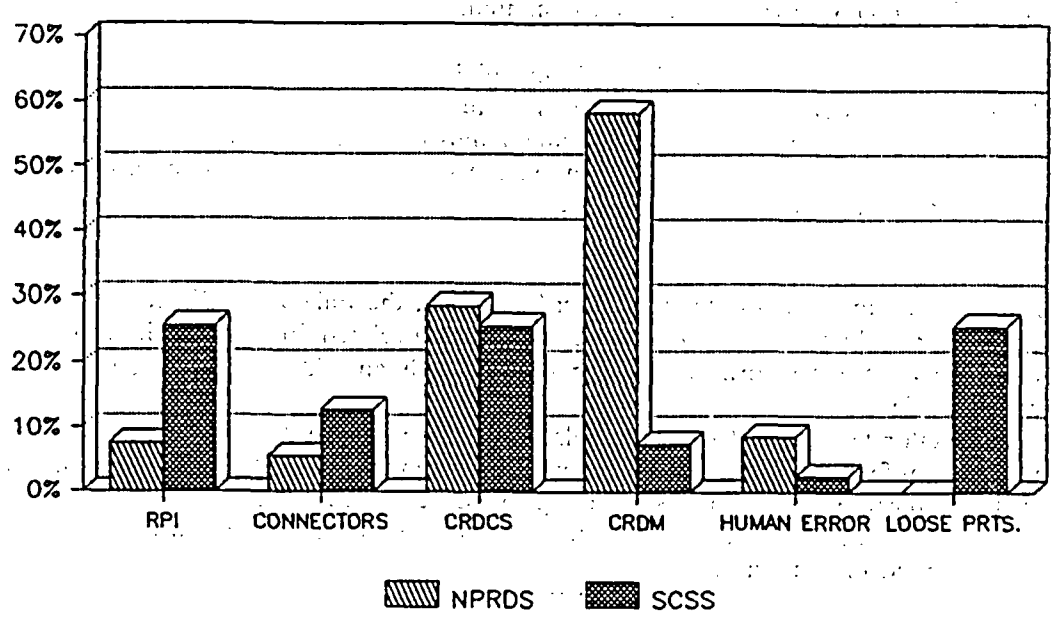

Figure 4.2. B&W LER frequency comparison NPRDS vs SCSS.

4.2 Dominant Component Failures

One primary objective of this study was to assess the impact of CRD aging-related degradation upon system performance and reliability. To accomplish this, a comparison was made between the information obtained from the data bases and the NPAR definition of aging related failures, as defined in NUREG-1144. To be classified as aging related, a failure must satisfy the following criteria:

1. The failure must be the result of cumulative changes with the passage of time, which if unchecked, could result in loss of function and impairment of safety. Factors causing aging may include:

   a) Natural, internal, chemical, and physical processes which occur during operation;
   b) External stresses (i.e. radiation, heat, humidity) caused by either the storage or operating environments.

2. To eliminate failures related to infant mortality, the component must have been in service for at least six months.

4.2.1. Combustion Engineering

Using the aging criteria, the LERs for Combustion Engineering plants were reviewed to determine the fraction which were aging related. As shown on Figure 4.3, 27% of the LER's were determined to be aging related. Non-aging system failures were described in 20% of the LER's. The remaining 53% lacked sufficient detailed information regarding failure cause. However, given the similarities in comparing the unknown cause failure descriptions to similar component failures with known causes, it is anticipated that a minimum of 50% of these may be attributable to aging. Thus the 27% identified should be considered as a minimum.

Primary coolant leakage from the rack and pinion CEDM, coil and control system failures accounted for the majority of the aging failures. Human errors, maintenance errors, and faulty procedures accounted for most of the non-aging failures, however, many of these did result in significant plant effects, as will be discussed in section 4.3. These effects demonstrate the control element drive systems sensitivity to these failures.

4.2.2 Babcock & Wilcox

Utilizing the same aging criteria as described above, the Babcock & Wilcox control rod drive system LER's were evaluated to identify the degree of aging related failure. As shown on Figure 4.4, 45% of the events were categorized as aging related, with an additional 48% being identified as potentially aging related.

CRDM stator failures and primary coolant leakage were the dominant aging related failures, while control system failures accounted for many of the potentially aging failures. Prior to redesigning the rod position indication system in 1985, B&W plants experienced relatively frequent system failures. This frequency has been decreased through the use of more reliable reed switches and redundant circuitry, as described in Section 4.4.

No trend was seen to demonstrate system susceptibility to human related errors. However, the control systems susceptibility to environmental degradation due to heat and dust contamination was seen.

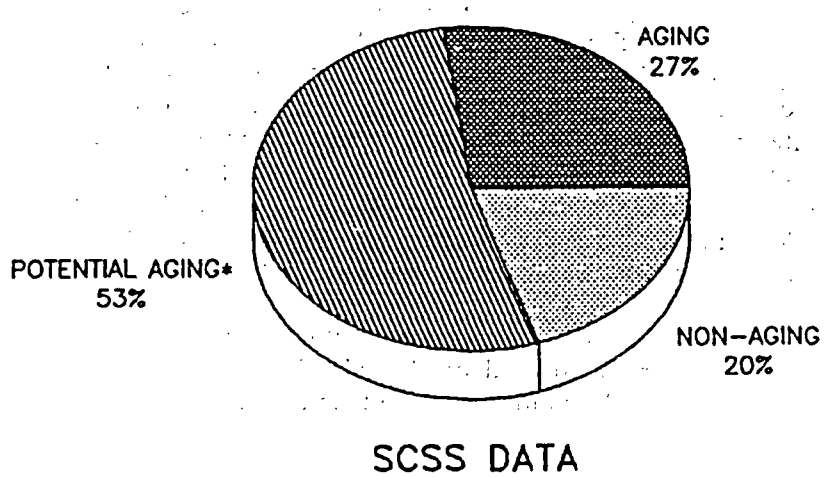

* See discussion Section 4.2.1

Figure 4.3. CED system aging fraction.

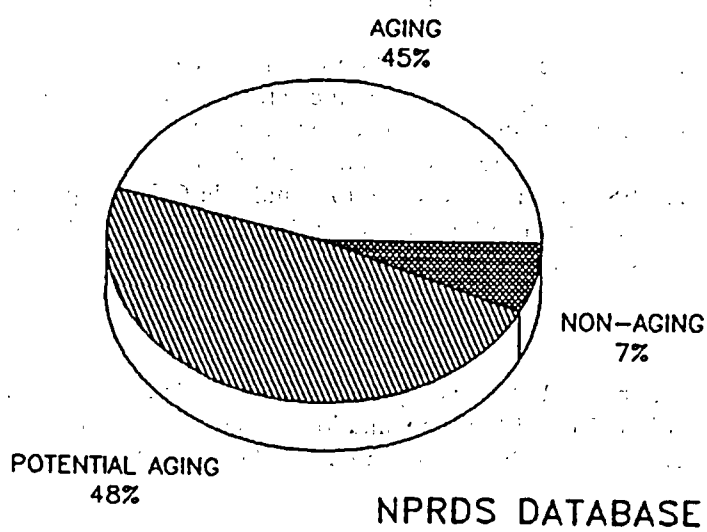

Figure 4.4. CRD system aging fraction.

4.3 Failure Effect

4.3.1 Combustion Engineering

Failures of individual components of the control element drive system not only affected the CED system, but also caused significant plant effects. As shown on Figure 4.5, CED system failure resulted in degraded operations 47% of the time, and a loss of redundancy another 25%. Perturbations to plant operations were defined as degraded operations. Loss of redundancy events were comprised primarily of rod positions indication system failures. Since CE plants utilize redundant systems to provide position indication, the loss of one does not have an immediate effect upon plant operations, other than requiring plant operators to verify rod position more frequently. However, from a risk and reliability standpoint, loss of redundancy may be significant. The no effect category included procedural and human errors which resulted in no plant operational effect.

As indicated on Figure 4.6, the most common plant effect was reduced load, primarily due to efforts necessary to recover from a dropped or slipped CEA. As per Standard Plant Technical Specifications,[14] power must be reduced to 70% if the time required to re-align a dropped or slipped CEA exceeds one hour.

For the ten year time period reviewed, automatic scrams occurred ten times. Eight of these scrams occurred on a low DNBR signal due to dropped CEA's, faulty CEAC, or control system overheating. Malfunctioning CEAC memory cards accounted for the remaining two scrams. As a result of these CEAC malfunctions, slight overcooling of the RCS occurred due to the combined effects of steam generator blowdown, main steam line drain valves remaining open, the boric acid concentrator being in service, the main feedwater pump turbine remaining in operation, and the low level of decay heat generated at that particular point in the fuel cycle.

Multiple rod events, due either to equipment failure or maintenance errors accounted for the manual plant shutdowns. A mismatch between reactor power and turbine load, due primarily to a dropped CEA, caused a rapid increase in steam generator pressure with a level shrink, leading the operators to manually scram the reactor on one occasion.

Engineered Safety Feature (ESF) actuation occurred seven times over the time period, five of which were automatic. The majority of the automatic actuations were the results of low DNBR signals due to dropped CEA's, which actuated the emergency feedwater system. One event caused a rapid RCS cooldown initiated by excessive steam demand due to feedwater valves which incorrectly remained open. One unintentional ESF actuation was due to a multiple CEA drop due to a maintenance error, while the other was due to operator failure when the Safety Injection Actuation Signal (SIAS) was not blocked during a reactor shutdown.

4.3.2 Babcock & Wilcox

Failures of the Control Rod Drive System for B&W plants, as shown in Figure 4.7, resulted in degraded plant operations 50% of the time, and loss of redundancy an additional 27%. As described above for CE, malfunctions and failures accounted for the majority of the redundancy losses.

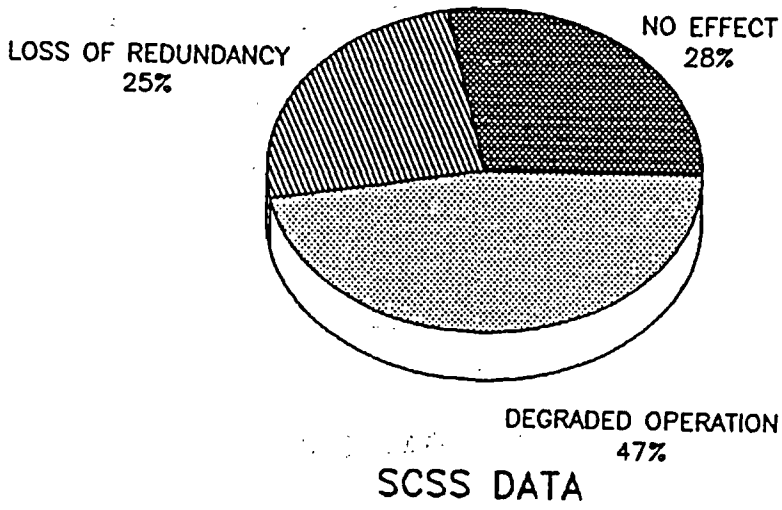

Figure 4.5. Effects of failure on CED system SCSS data.

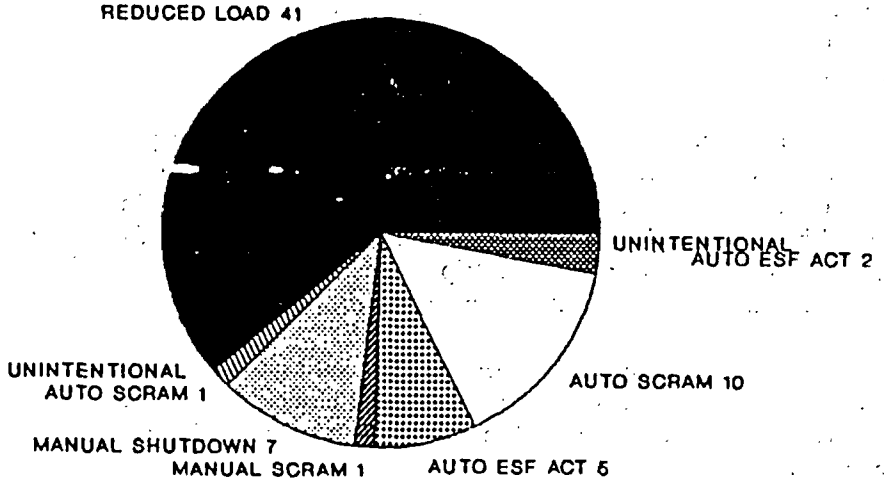

Figure 4.6. CE significant plant effects 1980-1989.

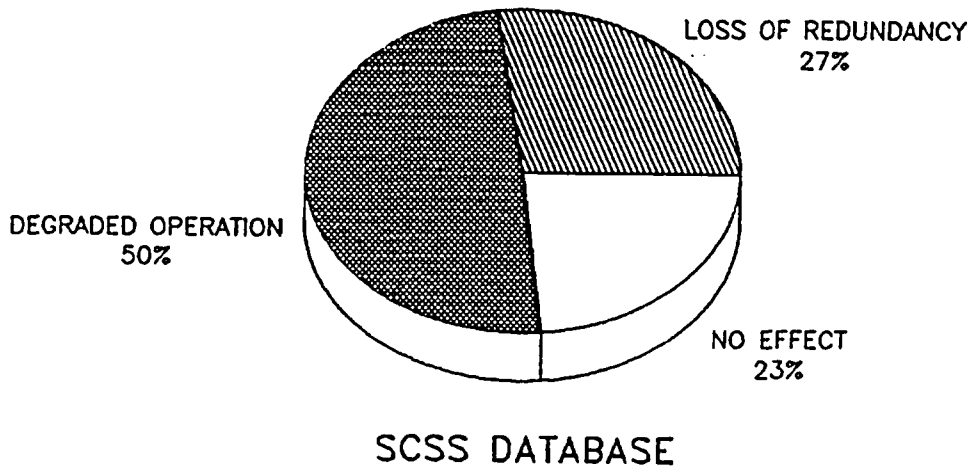

Figure 4.7. Effect of failure on CRD system SCSS database.

CRD system failures also caused significant perturbations on plant operations as shown on Figure 4.8. Control Rod assembly slippage or complete dropping were the primary cause of reduced load incidents. A loose power connection twice caused rod drops resulting in a reactor tilt exceeding the Technical Specification limits. A failed fuse in a control rod power supply accounted for another rod drop occurrence.

Three automatic reactor scrams were reported during the period. In one instance, a failed control system logic card prevented reactor operators from inserting the axial power shaping rods in response to a core unbalance, which subsequently led to a trip. An Integrated Control System (ICS) failure caused by concrete dust contamination of the control cabinet from nearby construction, caused another reactor trip. The third reactor trip was actually caused by low flow to the main feedwater pumps, however, the event was initiated by a rod drop.

The manual actuation of the ESF was initiated by a dropped rod and subsequent reactor trip due to low reactor system pressure. The feedwater block valves failed to close causing a high steam generator level. The emergency feedwater system was manually activated, and the main feedwater pumps manually tripped.

During the time period, two plant manual scrams were also reported. Multiple dropped rods due to a failed power supply initiated one event. The other manual scram was caused by a loose solder joint on a control rod sequencing card resulting in a power loss to the control rods.

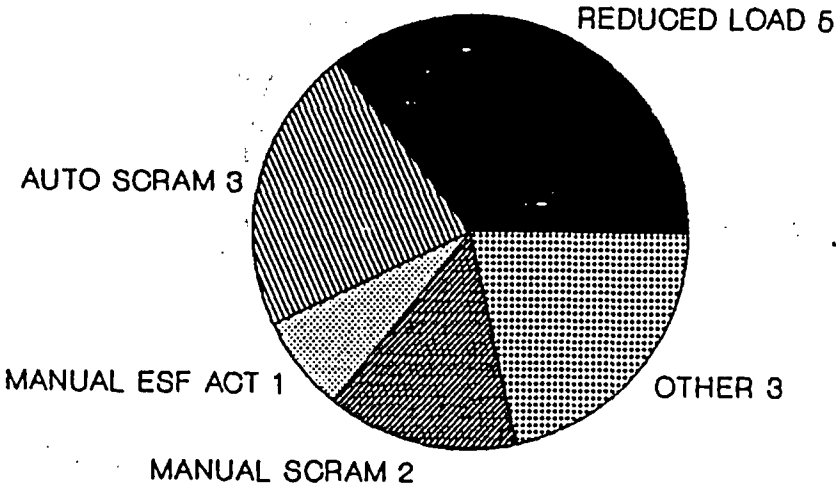

Figure 4.8. B&W significant plant effects 1980-1989.

The three plant events classified as other occurred while the plant was either at zero power or refueling. An immovable control rod due to a fractured CRDM leaf spring halted a plant start up, while broken fuel assembly holddown springs found during a refueling outage inspection accounted for the remaining two events. Both of these occurrences highlight potential loose parts which may have interfered with the movement of the control rods. The third zero power occurrence was initiated by a failed fuse in the absolute position indication system, which delayed start up.

It is important to note that many other control rod system failures, for both designs, also affected plant operations. For example, loss of a rod position indication system required plant operators to verify rod position more frequently. Dropped rods required operators to verify adequate shutdown margin, and to undertake measures to recover the misplaced rod. However, since the time required to complete this in some instances was less than one hour, the event was not classified as significant.

4.4 Specific Component Failures

4.4.1 Control Rod Drive Mechanisms

A review of the reportable failures indicates that CEDM failures occurred frequently. For the period, nineteen LER's were written documenting CEDM failures at CE plants. The specific failure causes are shown on Figure 4.9. A similar review of the NPRDS data base is presented in Figure 4.10. Since many of the failures resulting in primary coolant leakage are found during outages, LER's are not necessarily written, since it did not affect the safe operation of the plant.

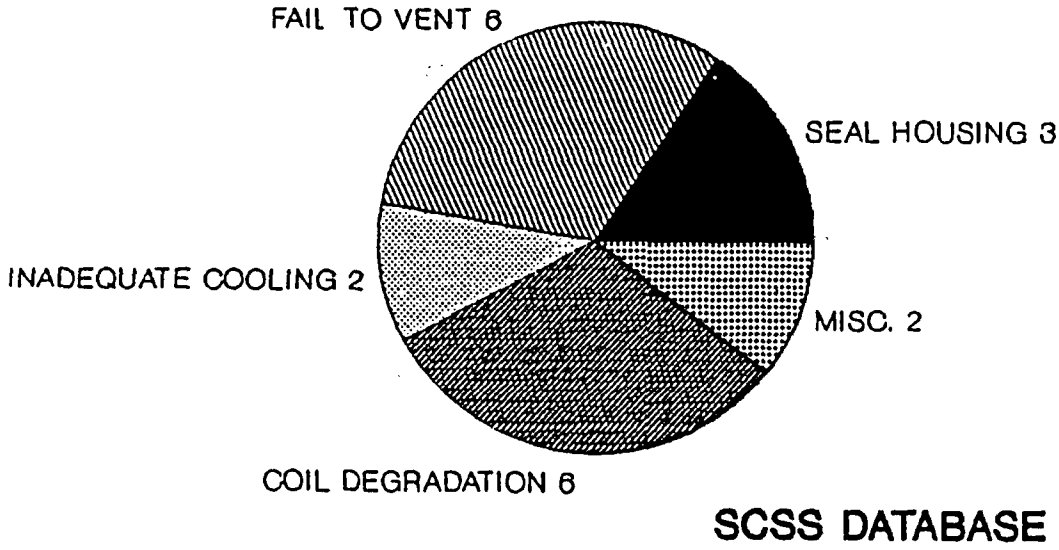

Figure 4.9. CE CEDM failures 1980-1989.

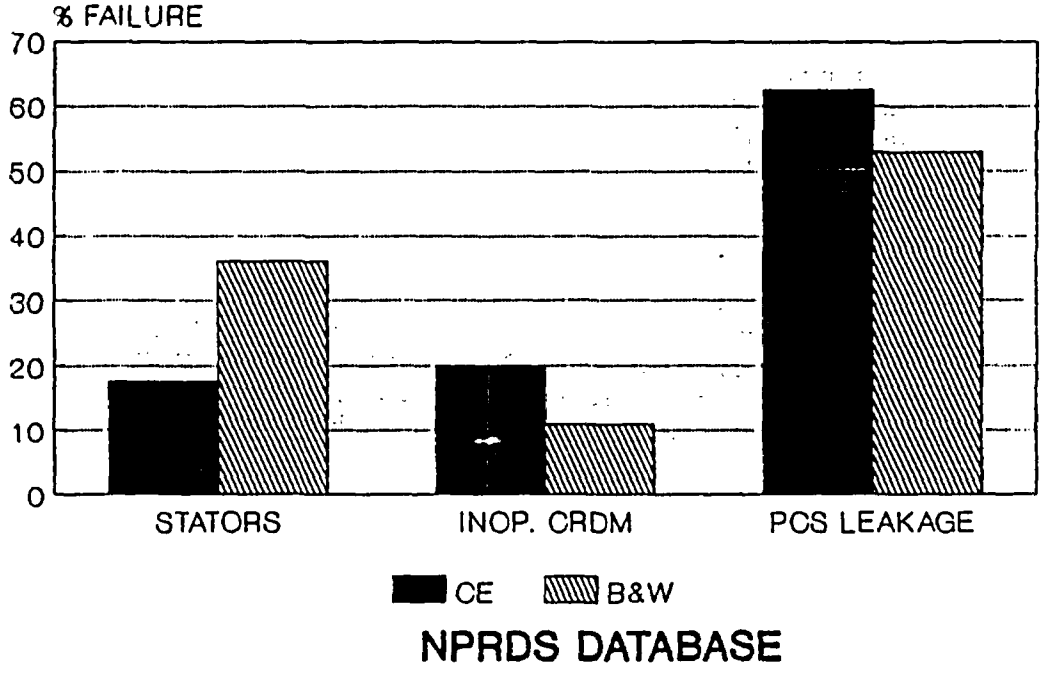

Figure 4.10. CRDM failures 1980-1989.

Several instances of dropped rods due to the elimination of CEDM venting before startup were also reported. This operation was eliminated as an unnecessary step since there was no apparent reason for performing it. However, since no other cause for the dropped rods was found, venting was returned to the start-up procedures, and the problem subsided.

a. Primary Coolant Leakage

Primary coolant leakage in a high-temperature area, such as the reactor vessel head, will cause the boric acid solution to boil and concentrate, increasing its acidity and corrosiveness. Additionally, the boric acid crystals could accumulate and block the cooling passages. If this condition is left uncorrected, the stator coils could overheat and fail, or the winding insulations could be degraded causing an electrical short.

Nuclear utilities were first alerted to the potential problems of primary coolant leakage in Information Notice No.86-108, "Degradation of Reactor Coolant System Pressure Boundary Resulting From Boric Acid Corrosion". This IN detailed leakage from a CRDM seal which was first observed during an outage. The leakage was judged acceptable for continued operation and left uncorrected. However, during a subsequent shutdown and inspection, it was found that boric acid crystals had severely corroded the CRDM cooling shroud.

Both B&W and CE plants have experienced primary coolant leakage as seen from Figure 4.10. The NPRDS data base listed fifty entries from CE plants and thirty seven from B&W plants. The majority of leaks from CE plants were from the seals of the rack and pinion type CEDM, while B&W experienced leaks between the motor tube and nozzle flange. The causes of the leaks, as determined by the utilities, were poor seal quality due primarily to inadequate QC, normal wear and deterioration.

B&W also experienced leakage from the double sealed CRDM vent valve located on the top of the motor tube. The sealing load is applied by a hydraulically pre-loaded spring washer. Boron deposits were noted on this assembly during visual inspections, necessitating an increase in the torque.

Another significant CE occurrence identified leaking CEDM pressure housings, which when removed and inspected, revealed circumferential crack indications on the seal housing. Similar indications were also found on the remaining two housings from the same fabrication lot. Further detailed analyses concluded that the faults were likely due to contaminant induced stress corrosion cracking. Eleven housings exhibited similar faults two years later. The exact contaminant was never conclusively identified, but it was thought to have been introduced during fabrication.

b. Stator Failure

Numerous instances of dropped rods due to stator failure for both B&W and CE plants were also reported. Coil failure due to overheating and electrical degradation were the common causes. Not all stator defects were found during operation as many were found during meggering tests performed at shutdowns and outages. Dropped rods, which appeared to have been caused by failed power supply fuses, were frequently caused by shorted stators.

Babcock & Wilcox identified four major causes for stator failure: epoxy breakdown due to wire incompatibility, moisture intrusion, bifilar design and fabrication defects[15].

Overheating due to blocked cooling air passages was also observed. Millstone 2 replaced twenty three upper gripper coils which shorted due to overheating caused by boric acid precipitates blocking air paths. This type of problem did not occur in B&W plants primarily due to the use of water for stator cooling.

c. Loose Parts

Instances of inoperable CRDM's caused by broken internals were also reported to NPRDS. B&W utilities were alerted to the problem by Information Notice No. 85-38, "Loose Parts Obstruct Control Rod Drive Mechanism." Davis Besse reported two incidents, four years apart, where internal CRDM pieces broke and became jammed, thus preventing the CRDM from moving.

In 1981, while recovering from a reactor trip, operators discovered that one rod would not withdraw. Upon subsequent disassembly and inspection of the CRDM, it was found that the leaf spring anti-rotational device of the leadscrew nut assembly had fractured into several fragments which became stuck between the buffer spring and the leadscrew, preventing the leadscrew from rising. Since no other similar occurrences had been reported, it was concluded that the failure was an isolated event.

However, while performing CRD drop time tests at Davis Besse in 1985, a CRDM failed to insert in the time required by the Technical Specification.[16] Examination revealed that a setscrew fragment had jammed, thus preventing disengagement of the latching mechanism from the leadscrew. Further inspection also revealed a broken leaf spring on the top of the leadscrew.

The setscrew which jammed the leadscrew broke off a CRDM maintenance tool. The spring failure was a brittle intergranular failure caused by mechanical interference with the torque tube cap in the top of the CRDM housing. Improper seating caused the springs to extend further than designed, and thus, struck the torque tube cap when the rod was raised. Further inspections revealed four additional CRDM's with similar problems.

Maintenance procedures were changed in an attempt to preclude a reoccurrence. CRDM tools were inspected after use to ensure that they had no broken parts, and visual techniques were employed to ensure properly positioned leaf springs. Prior to this, no requirement existed to ensure proper seating.

4.4.2 Control System Failures

a. Combustion Engineering

Control system failures accounted for the greatest occurrence of failures in CE plants. The result of the failures normally were dropped, slipped, or immovable CEA's. The control system was also susceptible to exterior stresses as well, since several instances of component overheating due to inadequate cooling system operation were reported. The specific component failures frequency are shown in Figure 4.11.

Failures of the coil power programmer were common, as sluggish upper gripper operation accounted for a large number of slipped or dropped CEA's. Corrective action consisted of adjusting the gripper timing sequences and increasing the coil voltages. Some plants have replaced the existing magnetic coils, with larger System 80 coils, designed to produce stronger magnetic fields resulting in improved latching capability.

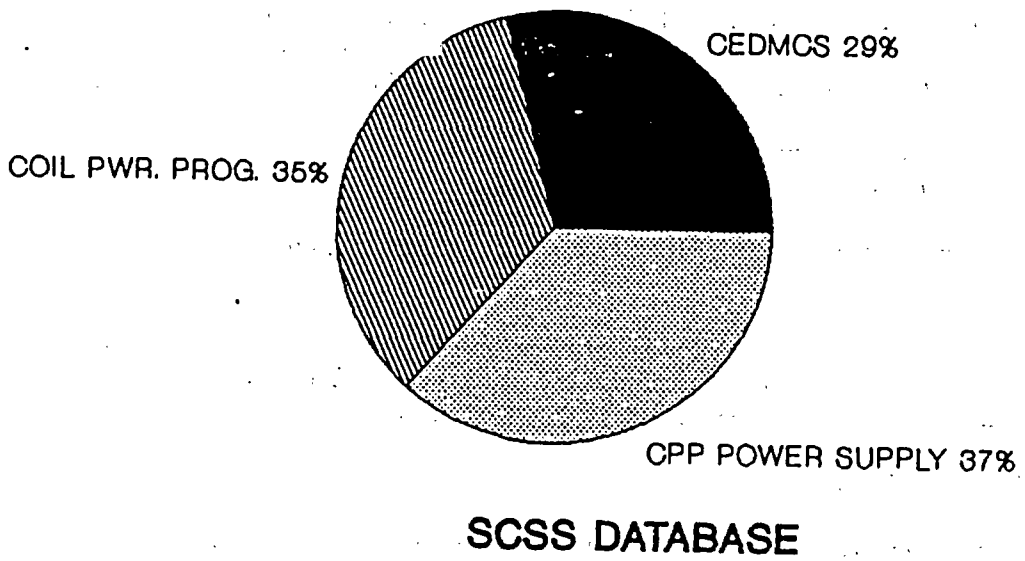

Figure 4.11. CE control system failures 1980-1989.

Another related problem was caused by a failed upper gripper coil DC current sensor. Investigation revealed that the failed sensor sent a false signal indicating that the gripper was energized when, in fact, it was de-energized. The CEA timer, sensing that 2 CEA coils were energized and capable of holding the CEA, de-energized one of the coils, allowing the CEA to drop. The root cause of the sensor failure was control cabinet and component damage caused by overheating in the CEDMCS room.

Failed 15V power supplies, often replacements for the originally installed model, accounted for a large portion of reportable occurrences resulting in numerous dropped or slipped CEA's. Due to the high incidence of failures, the original power supply model was reinstalled, and the design modified to incorporate redundant power supplies. It can be assumed that some of the LER's with unknown causes listed in Appendix A-8 also were caused by these same failures. However, since definitive failure causes were not reported, no correlation was drawn.

One unit reported a manual plant trip resulting from multiple dropped rods caused by the failure of a CEA subgroup breaker. The root cause for the breaker trip was not known, however testing indicated that the breaker tripped at a current of approximately 30 amps, 25% less than the 40 amp continuous design load. A NRC maintenance team inspection reviewed this event, and recommended that all the subgroup molded case circuit breakers be tested during the next outage, and then placed in the PM program for periodic testing. The basis for this recommendation was that molded case circuit breakers should be tested periodically to assure their reliability for the 40 year design life.

A slipped CEA due to an intermittent ground on the lower lift coil caused by degraded insulation on the coil lead wire was also reported. The ground occurred immediately following the

voltage increase associated with energizing the lower lift coil, and resulted from coil movement which brought the damaged lead near the coil stack housing assembly. These grounds were first identified in 1985. Based upon successful meggering and continuity checks, the coils were judged acceptable for use. A similar ground problem occurred during the first cycle at Palo Verde Unit 2. Examination of the coil revealed substantial damage to the coil lead wire due to a fabrication deficiency. Two factors contributed to the defective lead wire becoming a pathway for a short circuit to ground namely:

1) the motion of the lower lift coil leads, and
2) the orientation of the coil within the housing.

The remaining control system failures were due to overheating, breaker failures and electrical grounding of the coils.

The relative susceptibility of the control systems to the outside environment can be seen in the fact that LER's were generated on four separate occasions where the failure cause was overheating due to inadequate ventilation. The end effect of these events were dropped or immovable CEA's.

b. Babcock & Wilcox

As shown on Figure 4.2, control system failures accounted for approximately 25% of the reported events. However, with the exception of blown fuses, no other component accounted for any significant majority as shown on Figure 4.12.

Failed fuses accounted for three LER's and six NPRDS entries. Three separate instances of dropped rods caused by failure of the transfer switch module fuse were reported by Davis Besse. The transfer switch is used when a fully positioned rod group is moved to a holding bus. Failure of this switch may result in dropped rods. Investigation on the cause of fuse failures were inconclusive, and there was no evidence of either excessive heating or current on either the fuse, fuse holder, or associated wiring. Another fuse failure in the motor programmer also caused a rod drop. Again, no reason was found to explain the failure as no evidence of overheating or overcurrent was seen.

The susceptibility of the B&W control system to external factors was also demonstrated. On two occasions, CRD control system programmer board failures resulted in dropped rods. Investigations into the failure cause concluded that concrete dust from work performed in the vicinity of the control cabinets caused the boards to fail. Cabinet circuit board contacts were cleaned, faulty programmer boards replaced, and the system then performed as designed.

4.4.3 Rod Position Indication Failures

a. Combustion Engineering

CE plants utilize two systems to provide rod position indication, the reed switch and the pulse counting systems. For the period reviewed, component failures of each accounted for a significant portion of the reportable events, as shown on Figure 4.13.

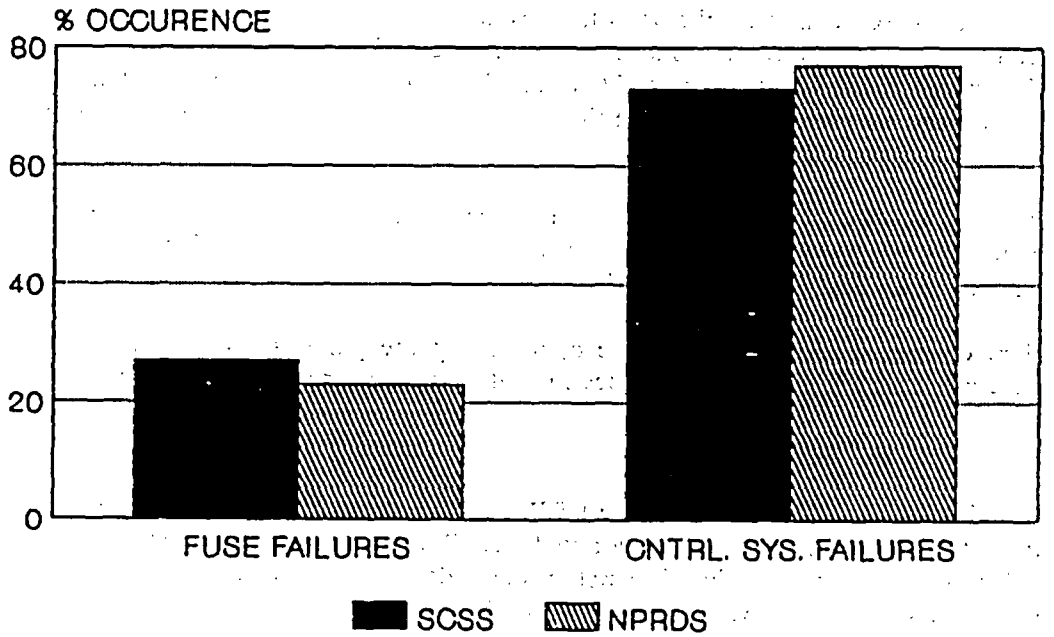

Figure 4.12. B&W control system failures 1980-1989.

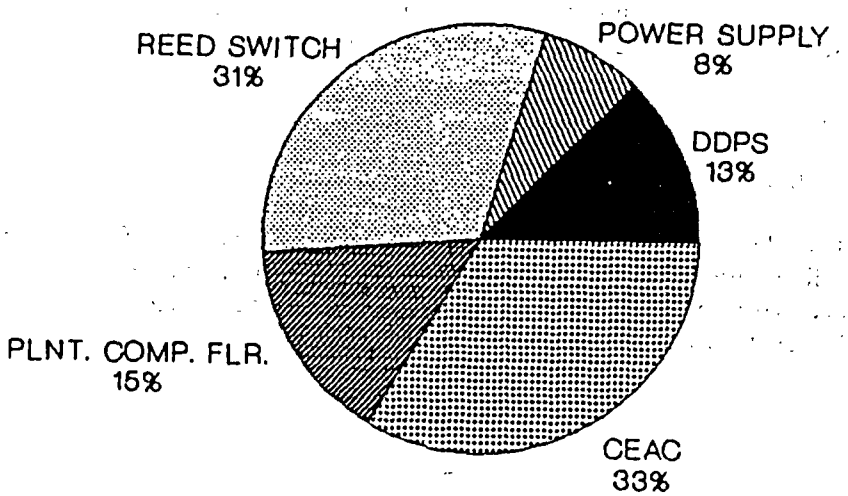

Figure 4.13. CE rod position indication failures 1980-1989.

Control Element Assembly Calculator (CEAC) failures accounted for the highest frequency of failures. The CEAC is an integral part of the position indication system, and its loss could generate spurious rod position signals leading to a reactor trip. The typical CEAC failure was related to circuit board malfunctions, however, each report did not provide sufficient detail in each instance to determine exact failure cause. It is interesting to note that one CEAC failure was credited to natural end of life failure during the first cycle of operation.

Reed switch failures were the other main failure cause. Since each CEA has independent reed switch position transmitters, the loss of one does not necessarily impair the function of the CEA. It does however, represent the loss of redundancy.

Plant computer failures affected the operation of the pulse counting system. No dominant failure cause was evident, however, as causes ranged from software errors to circuit board failures.

b. Babcock & Wilcox

A review of the LER's generated by B&W plants documenting rod position indication system failures indicate that the majority were prior to 1985. Prior to this time, a single reed switch failure would render the system inoperable. The system was redesigned to provide for redundant circuitry to allow for continual operations with failed reed switches.

Also, a new reed switch design, designated R4C was utilized. These new reed switches were more reliable and allowed the system to continue to operate with one failed reed switch. These switches were completely encased in glass, with rhodium contact points. Previous designs used a low differential reed switch with gold plating on top of the rhodium plating as shown in Figure 4.14. The change was necessitated by the failure rate and erratic operation of the previous design. The previous design had a tendency to build up a surface film on the contacts, which in conjunction with a small closing force resulting from the small gap, led to switch failures. The R4C reed switch provides a more positive contact because of the higher closing force, thus reducing surface film buildup.

As shown on Figure 4.15, no other major component failure caused the system to fail, and the occurrence of system failures since 1985 has decreased markedly.

4.4.4 Human Error

a. Combustion Engineering

The control element drive system was susceptible to component failures and environmental degradation as well as human errors. As shown on Figure 4.16, human errors could be divided into either maintenance errors or procedural errors. While it may be argued that errors of this type are not aging related, they do stress the plant systems, particularly when scrams, power reductions and ESF actuations result.

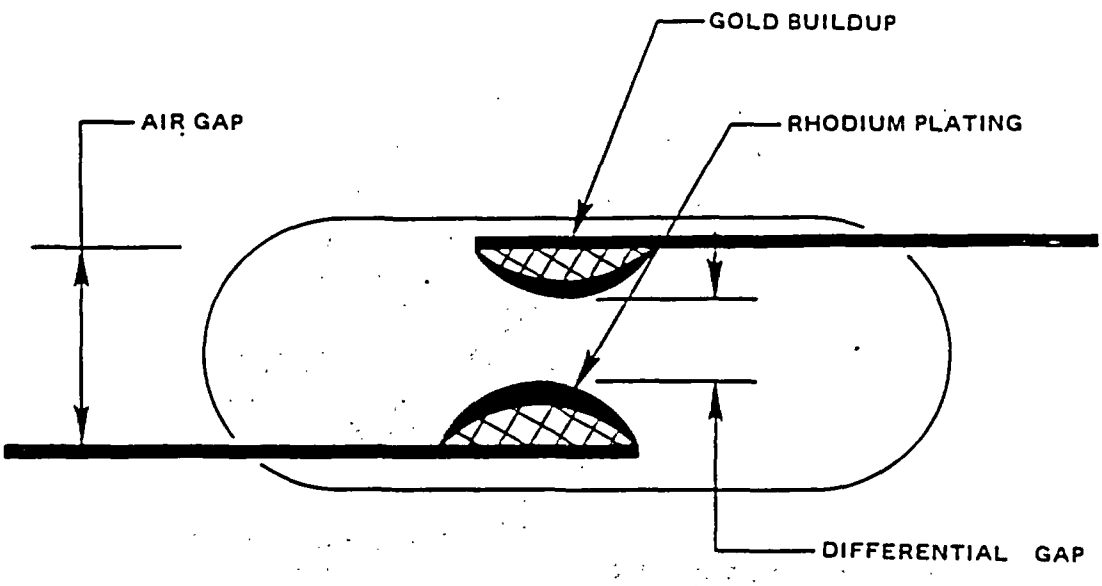

(b) LOW DIFFERENTIAL SWITCH

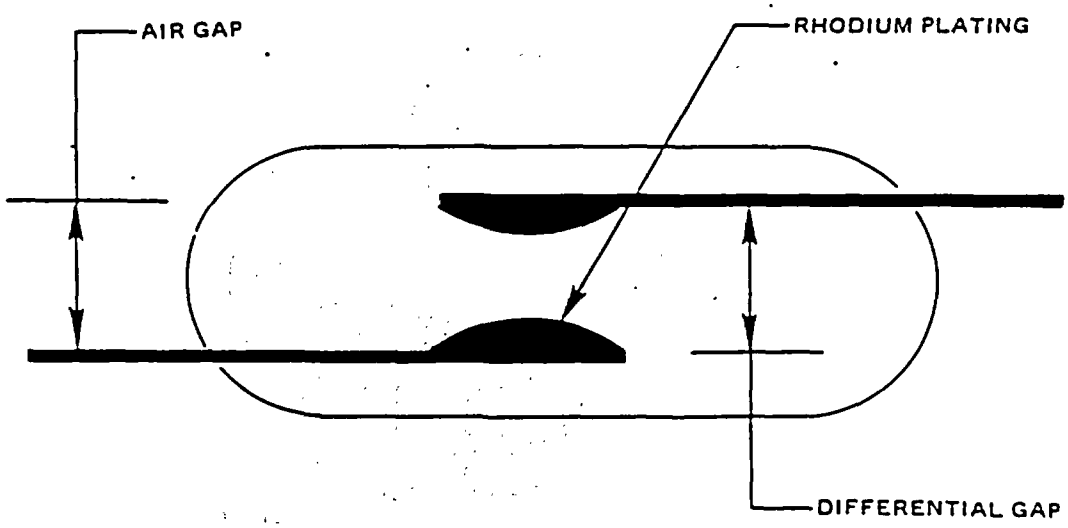

(a) HIGH DIFFERENTIAL SWITCH

Figure 4.14. Babcock & Wilcox reed switch comparison.

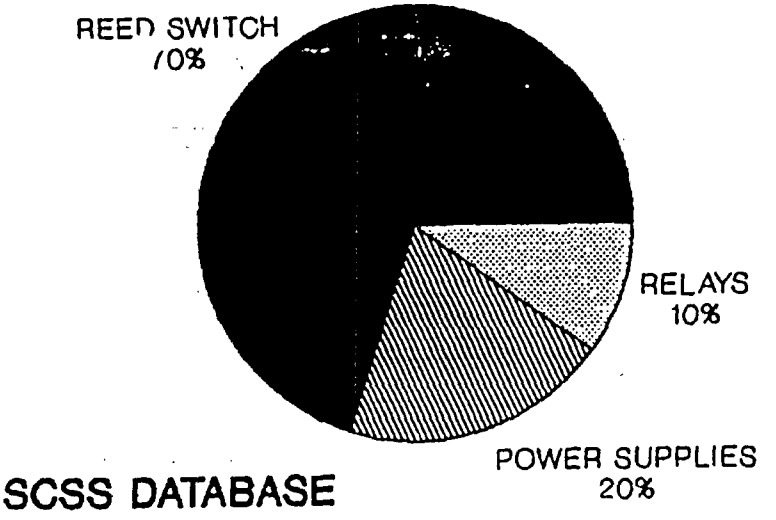

Figure 4.15. B&W rod position indication failures 1980-1989.

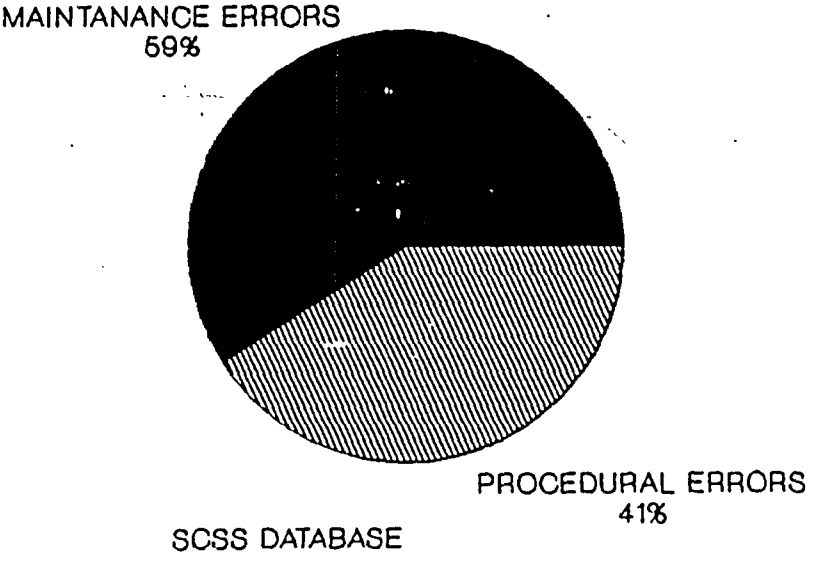

Figure 4.16. CE CED related human errors 1980-1989.

The majority of maintenance errors resulted in dropped rods and power reductions. Other events were caused by procedural errors which either did not account for proper position verification of the CEA's, or caused a portion of the system to be out of service. While it did not result in any particular system effect, in many instances a loss of redundancy resulted.

One occurrence of human error resulted in a violation of applicable Tech. Specs. due to the cooling coil water shutoff valve limit switch power supply not having the required backup overcurrent protection. The applicable control wiring diagrams erroneously showed a 120V AC cable connection on the line side of the fuse which should have provided the required overcurrent protection. To correct this problem, the cable was moved from the line side of the fuse to the load side. Again, while not an aging issue, the installed system did not match the documentation, which could have significantly impaired the cooling system, which in turn could have exposed the CED system to higher than normal temperatures.

b. Babcock & Wilcox

The review of reportable events for B&W plants for the 1980-1989 time period indicated no susceptibility of the control rod drive system to human or procedural errors.

4.4.5 Potential for Loose Parts

a. Combustion Engineering

The CE Control Element Drive System sustained no significant events related to reactor internal degradation. One event documented a guide tube deformation discovered during an outage inspection. The probable cause of the deformation was mechanical interference with the top nozzle. At the time of the damage, the fuel assembly was in a non-control element assembly location, and therefore did not present a system problem.

b. Babcock & Wilcox

While not directly related to the CRD system, B&W cores have experienced several reactor internal component degradations which posed a potential hazard to CRD insertion if debris either became lodged in the fuel assembly guide tubes or CRDM internals. Broken fuel assembly holddown springs, thermal shield bolts and reactor coolant pump fragments were examples of the debris source.

Debris from a damaged reactor coolant pump at Oconne 3 was carried by the coolant into the core where it became lodged in the fuel assemblies. Though confined mostly to the lower end fitting and first spacer grid, these fragments may have posed a threat to CR insertion if they blocked a guide tube or wedged in a CRDM.

Broken thermal shield support bolts caused primarily by intergranular stress corrosion cracking also posed a loose parts problem. Oconee 1, Oconee 2, Rancho Seco and Crystal River all reported similar problems. After detailed metallographic studies, it was concluded that the high degree of cold reduction induced during fabrication produced grain structure changes in an area of high stress. To rectify the problem, the lower thermal shield was redesigned the material of the bolts was changed from A286 to Inconel X750 and locking clips were attached to the bolts.

Broken fuel assembly holddown springs were identified at Crystal River, Davis Besse and in Oconee 1 and 3. The Mark B fuel assembly design, as shown on Figure 4.17, utilized one large helical coil spring, which is positioned on top of the upper end fitting and held in place by a spring retainer. Inspection of this spring revealed cracks, conclude that it was caused by low stress high cycle fatigue and stress corrosion cracking. Of all the broken spring identified, none actually interfered with control rod insertion or withdrawal.

Analyses by B&W concluded that no loose parts would have been generated from the failure. However, since the control rods are close to the spring when they enter the guide tubes, any part that may have broken off and become displaced could have interfered with CRA movement.

4.4.6 Miscellaneous

a. Combustion Engineering

Two significant effects were reported during the time period, which did not result in component failure, but did affect the systems operation.

During implementation of a change in the rod drop time testing procedure, it was discovered that slower than anticipated drop times resulted. Previously, power was interrupted to each mechanism individually, and the rod drop times met the requirement of the Technical Specification. The new method interrupted power to all of the rods simultaneously by means of the reactor trip breakers. This simultaneous power interruption to all of the drive mechanisms led to a slower dissipation of the stored energy in the holding coils, thus increasing rod drop times.

In response to this, Information Notice 88-47 was issued documenting the slow rod drop times which violated CE Technical Specification requirements.[18] While no operational safety problem resulted, this increase in drop time made it necessary to review all of the accident analysis in the FSAR to ensure continued conformance to all licensing basis. From the viewpoint of risk, this event was similar to the loss of redundancy, since the system would not have responded in the required 3 seconds.

The second event documents dropped rods caused by a shorted coil power programmer. The event was not hardware related, but was caused by water seepage from an overflowing toliet in the control room. The water seeped into the cable spreading room, where it caused the coil power programmer to short.

The problem was resolved, and the equipment, cables, and cabinets dried with no further difficulty. This event highlights the importance of remaining cognizant of the potential effects to the system from exterior events. Moisture, high temperature, or high humidity are stresses, which, if uncorrected or undetected, could produce aging related failures.

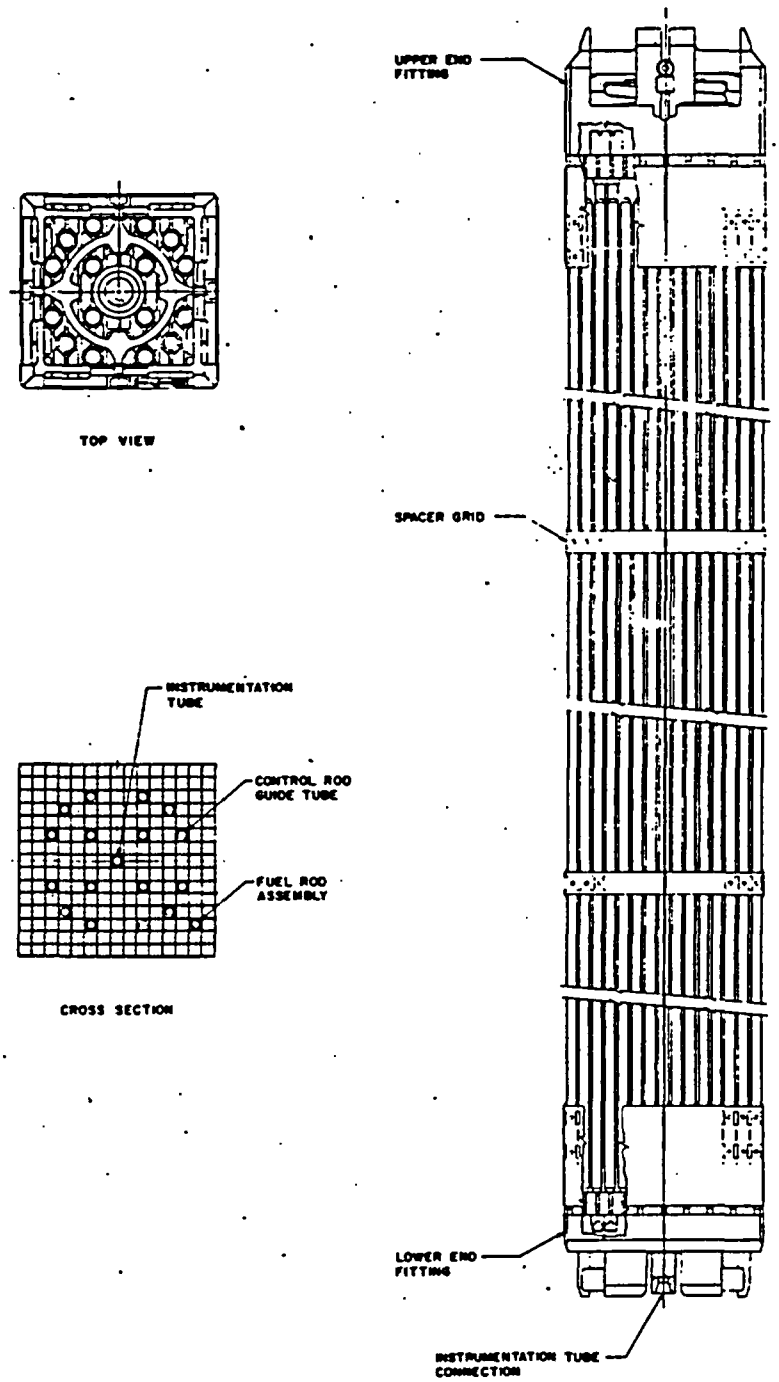

Figure 4.17. Babcock & Wilcox fuel assembly.[17]

5. SUMMARY AND CONCLUSIONS

The Control Rod Drive System for both Combustion Engineering and Babcock & Wilcox reactors provide both reactor control and plant safety functions. Both systems position the individual control rod assemblies to control short term reactivity changes, as well as effecting a rapid reactor shutdown through the rapid insertion of the control assemblies. Age related failures for both systems have occurred, as seen from a review of the operating experience. As a result of these component failures, loss of system redundancy, dropped rods, and reactor scrams have occurred. The susceptibility of the system to external influences, such as human error and the operating environment were also evident.

5.1 Conclusions

5.1.1 Combustion Engineering CEDS

Based upon the system review and the specific operating event reports presented in this study, the CE control element drive system has experienced age related failures. A minimum of 27% of the failures were classified as aging related with several specific sub assemblies identified as being the main contributors:

- CED control system: electrical component failures especially power supplies and timing modules. Component failures due to overheating also occurred.

- CEDM housing failures: primary coolant leakage principally from the rack and pinion seal failures have been reported. Housing cracks due to contaminant induced stress corrosion cracking have also occurred. Though likely induced by fabrication, these highlight the susceptibility of the housings to this type of failure mechanism.

- CEDM coils: coil failures due to electrical and insulation degradation have occurred, caused primarily by high temperature or corrosion.

- Rod Position Indication: failures of the reed switches and the Control Element Assembly Calculator causing redundancy loss.

Component failures resulted in degraded operation approximately 47% of the time, with a loss of redundancy in an additional 25% of the events. The effects on reactor operation due to these failures was significant. Manual and automatic scrams, ESF actuation, dropped or slipped CEA's, and loss of redundancy occurred. In addition to challenging the CED system, stresses were also placed on other plant systems such as Reactor Protection, Reactor Regulating and other power systems.

The system was also susceptible to external factors. Examples of dropped rods and reactor scrams caused by human error were presented. Transients caused by maintenance on the CED system have occurred. Seemingly minor operational and procedural changes, such as the elimination of CED venting resulted in adverse effects.

Variations in operating environmental conditions also resulted in aging-related failures. Because of the location of the CEDM coils on the reactor vessel head, continuous forced air cooling must be provided. Lack of cooling has led to overheating of the coils. Cooling must also be provided

for the electrical components in the control and power cabinets. There were numerous examples of failed components due to insufficient or no cabinet cooling.

A very serious problem is primary coolant leakage from the CEDM. The primary cause of such leakage has been seal failure. Boric acid in the primary coolant is very corrosive at high temperatures. Left uncorrected, this leakage has caused corrosion problems for vessel penetrations and CEDM cooling systems resulting in the generation of an Information Notice by the Nuclear Regulatory Commission.

5.1.2 Babcock & Wilcox CRDS

The Babcock & Wilcox Control Rod Drive System has also experienced age-related failures as seen through the review of the operating event reports. A minimum of 45% of the failures reviewed were aging-related.

The sub-assemblies which were most susceptible to failures were:

- CRDM Coils: stator degradation leading to electrical shorts.
- CRDM Motor Tube: flange leakage due primarily to gasket aging has led to numerous instances of primary coolant leakage. Failures of the CRDM internals also have jammed the leadscrew, leading to inoperable control rod assemblies. Similar occurrences have also resulted in slower-than-expected rod drop times violating the Technical Specifications.
- Control System: failures resulting from dropped rods have occurred due to fuse failures and environmental degradation in the control cabinets.
- Rod Position Indication System: early failures with the reed switches and the inability of the analog position indication system to monitor rod position with a failed reed switch resulted in major improvements in system design improvements. A more reliable design consisting of improved reed switches and circuit improvements decreased the occurrences of erroneous rod position signals. The present system is capable of functioning with a failed reed switch.

System failures resulted in degraded operations 50% of the time, with an additional 27% loss of redundancy, and significant operational effects have resulted from these failures. Dropped or slipped rods, reactor power decreases and scrams have all resulted. Operational occurrences such as these stress not only the CRD system, but other plant systems such as the reactor protection and other power regulating systems.

System susceptibility to external influences was also demonstrated. Dropped rods due to excessive temperatures in the area of the reactor vessel head and the accumulation of concrete dust in control system cabinets have occurred.

5.2 Future Work

The control rods and associated drive systems are essential components ensuring the safe and reliable operation of a nuclear plant. Based upon the detailed system and operating data presented, it was shown that both the B&W and CE control rod drive systems experienced age related failures. Each designs major sub-components that were most susceptible to these failures were identified. These

failures resulted primarily in component degradation, the loss of system redundancy, reactor power reductions and scrams.

Although the databases have not provided complete failure information for every event, they have provided sufficient information for this preliminary assessment. Future work will be designed to augment these findings,

As described in the Introduction, additional information and analysis are required before a formal Phase I aging assessment can be completed. A detailed Failure Mode and Effect Analysis, or equivalent, must be performed to qualitatively evaluate the system for component interfaces and their safety impact. Utility inspection and maintenance procedures must also be assessed for their effectiveness in identifying component degradation before failure. This is essential if the impact of the failures upon plant safety is to be minimal.

Detailed questionnaires have been prepared requesting specific utility operating and maintenance practices and procedures. These have been forwarded to the EPRI Equipment Qualification Advisory Group through NUMARC. The responses will be evaluated and an assessment of the effectiveness of the results in identifying and mitigating aging will be performed. Similarly, preventive maintenance programs will be assessed, with special attention being given to the subcomponents most susceptible to aging degradation.

6. REFERENCES

1. Vora, J.P., "Nuclear Plant Aging Research (NPAR) Program Plan," NUREG-1144, Revision 1, September 1987.

2. Fullwood, R., et al., "Aging and Life Assessment Program (ALEAP) Systems Level Plan," BNL Report A-3270-12-86, December 1986.

3. Gunther, W. and Sullivan, K., "Aging Assessment of the Westinghouse PWR Control Rod Drive System," NUREG/CR-5555, BNL-NUREG-52232, September 1990.

4. Final Safety Analysis Report, Arkansas Nuclear One, Unit 2, Docket No. 50-368.

5. Ibid.

6. Final Safety Analysis Report, Waterford Steam Electric Station, Docket No. 50-382.

7. Final Safety Analysis Report, Fort Calhoun, Docket No. 50-285.

8. FSAR, ANO-2, Docket No. 50-368.

9. Final Safety Analysis Report, Arkansas Nuclear One, Unit One, Docket No. 50-313.

10. Ibid.

11. Williams, J., et al., "Control Rod Drive Mechanism Test Program," BAW-10029A, Revision 3, August 1976.

12. Final Safety Analysis Report, Rancho Seco 1, Docket No. 50-312.

13. FSAR, ANO-1, Docket No. 50-313.

14. U.S. Nuclear Regulatory Commission, "Standard Technical Specifications for Combustion Engineering Pressurized Water Reactors," NUREG-0212, Revision 2, Fall 1980.

15. Koppe, R., et al., "Characterization of the Performance of Major LWR Components," EPRI NP-5001, January 1987.

16. U.S. Nuclear Regulatory Commission, "Standard Technical Specifications for Babcock & Wilcox Pressurized Water Reactors," NUREG-0103, Revision 4, 1980.

17. Riggs, R., "Control Rod Guide Tube Wear in Operating Reactors," NUREG-0641, April 1980.

18. USNRC, CE Standard Technical Specification, NUREG-0212, Revision 2, Fall 1980.

Appendix A

Summary of Licensee Event Reports for Combustion Engineering
Control Element Drive System
1980 - 1989

Table A-1	Cable and Connector LER's
Table A-2	Coil Power Programmer LER's
Table A-3	Coil Power Programmer Power Supplies LER's
Table A-4	CEDMCS LER's
Table A-5	CEDM LER's
Table A-6	Rod Position Indication LER's
Table A-7	Human Error LER's
Table A-8	LER's with Unknown Causes
Table A-9	Miscellaneous LER's

Table A-1. Cable and Connector LERs

	Plant	LER No.	Age at Failure (years)	Failure Description
1	St. Lucie 1	335/80-005	4	Loose lead CPC 15V power supply caused CEA to drop twice.
2	St. Lucie 1	335/80-003	4	Cable problem between containment and refueling disconnect panel caused position indication to be lost twice.
3	St. Lucie 1	335/81-026	5	Cable problem between containment and refueling disconnect panel caused position indication to be lost.
4	Millstone 2	336/80-010	5	Erratic position indication caused by intermittent open circuit in cable or connector from reed switch.
5	Millstone 2	336/80-028	5	Faulty jumper cable between refuel disconnect panel and reed switch caused dropped CEA and power reduction.
6	San Onofre 2	361/83-124	1	Faulty connector in CEAC position circuit gave erroneous position indication twice.
7	Waterford 3	382/86-013	1	Loose cable connection caused fluctuating position indication signal and subsequent reactor trip.
8	Arkansas 2	368/81-010	3	CEAC inoperable due to a loose cable connection.
9	Arkansas 2	368/82-027	4	CEA had erroneous position signals due to faulty ..SPT cable connection.
10	San Onofre 2	361/83-098	1	CEAC inopearable due to loose screw connection on position transmitter input.

Table A-2. Coil Power Programmer

	Plant	LER No.	Age at Failure (years)	Failure Description
1	Calvert Cliffs 1	317/82-045	12	CEA dropped due to erratic upper gripper latch action.
2	Calvert Cliffs 2	318/87-008	11	CEA dropped due to failure of upper gripper power switch module.
3	Calvert Cliffs 2	318/80-010	4	CEA dropped, power reduced due to faulty timer module.
4	St. Lucie 1	335/80-007	4	CEA dropped, power reduced due to failed timer module.
5	Millstone 2	336/80-013	6	CEA dropped due to failed timer module, power reduced.
6	San Onofre 2	361/83-096	1	Dirty contacts on CEA timer card caused CEA to slip and power reduction.
7	San Onofre 2	361/86-018	4	CEA slipped due to inherent design deficiency in software which control DC to CEA coils.
8	San Onofre 3	362/84-003	1	Sluggish gripper operation caused CEA to slip and subsequent reactor scram.
9	Waterford 3	382/86-001	1	Faulty timing module caused CEA drop and reactor trip.
10	Millstone 2	336/81-038	7	CEA could not be withdrawn due to loose connection between timer module and power switch.
11	Millstone 2	336/82-025	8	CEA could not be withdrawn due to loose connection between timer module and power switch.
12	San Onofre 2	361/85-031	3	Missing lug nut caused abnormal energization of power coils, causing CEA subgroup to drop and reactor trip.
13	Calvert Cliffs 2	318/82-026	6	CEA dropped twice. Timer and upper gripper power switch replaced. Reactor power reduced.
14	Calvert Cliffs 1	317/81-071	7	Control module failure caused continuous insert signal resulting in CEA misalignment. Power reduction.
15	San Onofre 2	361/83-014	1	Dropped CEA's due to defective coil driver actuation card.
16	San Onofre 2	361/83-054	1	CEA dropped during surveillance testing due to slow gripper operation.
17	Arkansas 2	368/81-031	4	CEA dropped on 2 separate occasions due to poor contact on coil driver card causing power loss and sluggish upper gripper movement.
18	Arkansas 2	368/82-004	4	CEA dropped due to sluggish upper gripper.

Table A-3. Coil Power Programmer
Power Supplies

	Plant	LER No.	Age at Failure (years)	Failure Description
1	Calvert Cliffs 1	317/82-045	8	Erratic upper gripper latch action, dropped CEA, power reduction. Increased HV power supply.
2	St. Lucie 1	335/80-002	4	Failed 15V power supply caused dropped CEA and power reduction. (Powermate SU-UNI-30A-BV)
3	St. Lucie 1	335/80-023	4	2 CEA's dropped. Same as above.
4	St. Lucie 1	335/80-032	4	CEA dropped twice, timer module and power supply replaced. Reactor power reduced.
5	St. Lucie 1	335/80-034	4	Failed 15V power supply.
6	St. Lucie 1	335/80-035	4	Failed 15V power supply.
7	St. Lucie 1	335/80-036	4	Failed 15V power supply.
8	St. Lucie 1	335/80-010	4	Failed 15V power supply.
9	St. Lucie 1	335/80-043	4	Failed 15V power supply.
10	St. Lucie 1	335/80-045	4	Failed 15V power supply.
11	St. Lucie 1	335/80-046	4	Failed 15V power supply. All power supplies replaced with original Powermate UNI-88.
12	St. Lucie 1	335/80-048	4	Failed 15V power supply. All power supplies replaced with original Powermate UNI-88.
13	St.Lucie 1	335/80-049	4	Failed 15V power supply. All power supplies replaced with original Powermate UNI-88.
14	St. Lucie 1	335/80-050	4	While changing power supplies, voltage spike led to 2 CEA's dropping. Reactor manually tripped.
15	St. Lucie 1	335/80-051	4	Fuse blew in alternate power supply line, CEA dropped.
16	St. Lucie 1	335/80-052	4	Dropped CEA. Actual cause unknown but probably due to either power supply failure, inadequate ventilation or power supply mounting.
17	St. Lucie 1	335/81-020	5	Dropped CEA, reduced power, replaced power supply.
18	Millstone 2	336/82-041	8	CEA dropped twice, power reduction, failed 15V DC power supply (Lambda Elec LCD-A-22).
19	Maine Yankee	309/84-001	12	Failed power supply caused dropped rod and reactor shutdown.

Table A-4. CEDMCS

	Plant	LER No.	Age at Failure (years)	Failure Description
1	Arkansas 2	368/83-040	5	Dropped CEA due to a blown fuse.
2	St. Lucie 1	335/80-038	4	Failed timing module which overheated due to ventilation fan turned off for maintenance.
3	Arkansas 2	368/84-024	6	Dropped CEA due to failure of SCR, power supply fuses, opto-isolator cards or coil driver cards. Subsequent reactor scram.
4	St. Lucie 1	335/82-056	6	CEA motion inhibit circuit for CEA out of sequence deviation scanner failed due to loose relay.
5	St. Lucie 1	335/82-055	6	CEA motion inhibit circuit for CEA out of sequence deviation scanner failed due to loose relay.
6	St. Lucie 1	335/81-030	5	CEA motion inhibit circuit for PDIL circuit failed due to failed relay.
7	Millstone 2	336/82-027	8	During CEA surveillance testing, CEA motion inhibit for all CEA groups became inoperable due to failed logic chip.
8	Millstone 2	336/82-030	8	CEA motion inhibit interlock did not function due to faulty operational amplifier.
9	San Onofre 3	362/85-020	2	Dropped CEA due to blown fuse in the hold bus logic circuit. Subsequent reactor trip.
10	Waterford 3	383/86-002	1	Dropped CEA due to cabinet cooler switch being turned off, causing overheating of circuits. Reactor trip.
11	San Onofre 2	361/83-090	1	Slipped CEA due to poor connection on CEDMCS power switch.
12	Calvert Cliffs 1	317/81-066	7	While troubleshooting CEDMCS, a logic module which was inserted caused spurious signals which caused rod drop due to a failed off switch on the control panel.
13	Waterford 3	382/89-017	4	Unable to withdraw CEA due to control circuitry problems. Reactor trip.
14	Calvert Cliffs 2	318/83-019	7	Circuit burn in of newly installed circuit boards caused PDIL function to be inoperable.
15	Calvert Cliffs 2	318/83-027	7	Failure of PDIL auctioneering card output semi-conductor rendered CEA motion inhibit inoperable.

Table A-5. CEDM

	Plant	LER No.	Age at Failure (years)	Failure Description
1	Palisades	255/81-049	10	Plant shutdown due to excessive coolant leakage past improperly installed CEDM seal housing gasket.
2	Palisades	255/84-024	13	Failed CEDM seal housing. Plant brought to cold shutdown.
3	Palisades	255/85-006	14	CEA inoperable due to failed motor brake drive package.
4	Palisades	255/86-040	15	14 CEDM seal housings showed cracks due to contaminant induced stress corrosion cracking.
5	Calvert Cliffs 2	318/80-040	4	Dropped CEA due to omission of CEA venting during primary system fill.
6	Calvert Cliffs 2	318/80-041	4	Dropped CEA due to omission of CEA renting during primary system fill. Reduced power.
7	Calvert Cliffs 2	318/80-048	4	2 dropped CEA's due to omission of CEA venting.
8	Calvert Cliffs 2	318/80-056	4	CEA dropped due to omission of CEA venting, power reduced.
9	Calvert Cliffs 2	318/80-057	4	CEA dropped due to omission of CEA venting during primary system fill.
10	Calvert Cliffs 2	318/81-054	5	CEA dropped due to omission of CEA venting during primary system fill. Reactor power reduced.
11	Millstone 2	336/88/008	14	Overheating of the upper gripper coils due to degradation of CEDM cooling system due to air flow blockage by boric acid, deposition caused 2 CEA's to drop. Plant shutdown.
12	Millstone 2	336/88-009	14	Dropped CEA and reactor shutdown due to overheating of upper gripper coil due to lack of cooling caused by boric acid deposition.
13	San Onofre 2	361/83-102	1	Malfunction of upper gripper coil stack caused dropped CEA.
14	Arkansas 2	368/84-026	6	Shorted upper gripper coil caused CEA to drop. Reactor trip.
15	Waterford 3	382/86-023	1	Failed lower gripper sensor caused dropped CEA and subsequent reactor trip.
16	St. Lucie 2	389/85-010	2	Failed upper gripper coil led to dropped CEA and reactor shutdown.
17	Palo Verde 1	528/88-020	3	Lower lift coil ground caused dropped CEA.
18	Palo Verde 1	528/88-026	3	Lower lift coil ground caused dropped CEA.
19	Palisades	255/80-020	9	Dirty control relay armature and holddown contactor interlock stuck resulting in slipped CEA.

Table A-6. Rod Position Indication

	Plant	LER No.	Age at Failure (years)	Failure Description
1	Palisades	255/80-031	9	During control rod interlock testing, group of control rods withdrew from core due to loss of primary and secondary data loggers.
2	Palisades	255/88-025	17	Oscillating power supply caused spurious alarms, which led operators not to recognize an out of sequence alarm as valid.
3	Calvert Cliffs 1	317/83-008	9	Failed RSPT's gave erratic position information on 2 CEA's (Electro Mechanics N9027-1).
4	Calvert Cliffs 1	317/83-026	9	Failed RSPT gave erratic rod position information (Electro Mechanics N9027-1).
5	Calvert Cliffs 1	317/83-036	9	Shorted RSPT overloaded power supply causing loss of all reed switch position indication. Power reduced.
6	Calvert Cliffs 2	318/82-019	6	Failed RSPT gave intermittent position indication.
7	Calvert Cliffs 2	318/82-022	6	Failed RSPT gave erroneous position indication.
8	Calvert Cliffs 2	318/83-065	7	2 failed RSPT's produced erroneous rod position information (Electro Mechanics N9027-1).
9	Calvert Cliffs 2	318/83-069	7	Lost all reed switch position information due to failed metroscope power supply.
10	Calvert Cliffs 2	318/83-075	7	Failed RSPT caused spurious CEA Motion Inhibit Alarms.
11	St. Lucie 1	335/80-022	4	Due to programming error, DDPS malfunctioned, causing loss of all backup CEA position indication.
12	St. Lucie 1	335/80-059	4	Due to software error, pulse counting CEA information lost when DDPS failed.
13	St. Lucie 1	335/81-007	5	DDPS system failure resulting in loss of CEA backup position indicating system.
14	St. Lucie 1	335/81-002	5	DDPS system failure resulting in loss of CEA backup position indicating system.
15	St. Lucie 1	335/82-049	6	Pulse counting function for a CEA was deleted by plant computer.
16	St. Lucie 1	835/82-044	6	Pulse counting function for 1 CEA was deleted by plant computer.
17	Millstone 2	336/80-008	6	Pulse counting position indication system inoperable due to faulty analog input driver card.
18	Millstone 2	336/81-009	7	Circuit card failure in plant computer caused pulse counting indication system to be inoperable.
19	Millstone 2	336/81-037	7	Blown resistor in plant computer 36V power supply caused pulse counting position indicating system to become inoperable.

Table A-6 (Cont'd.)

	Plant	LER No.	Age at Failure (years)	Failure Description
20	San Onofre 2	361/83-011	1	Erroneous rod position indication caused by faulty isolation amplifier card.
21	San Onofre 2	361/83-087	1	Faulty reed switch produced erroneous rod position indication.
22	San Onofre 2	361/86-027	4	Loose solder joint on RSPT produced wrong position indications leading to reactor trip.
23	San Onofre 2	361/89-019	7	Misalignment of RSPT associated with full in lights caused lights not to come on when CEA fully inserted.
24	Arkansas 2	368/80-053	2	Software problem caused failure of CEAC.
25	Arkansas 2	368/80-058	2	Software problem caused failure of CEAC.
26	Arkansas 2	368/80-080	2	Data link input card on the optical isolator and failed test circuit module card caused CEAC failure.
27	Arkansas 2	368/82-005	4	Failure of high level MUX gate card caused CEAC to show incorrect CEA positions.
28	Arkansas 2	368/83-029	5	Failure of high level MUX card caused CEAC failure.
29	Arkansas 2	368/85-018	7	Erroneous CEA position signals caused by failed field effect transistors in high level MUX card for CEAC caused reactor trip.
30	Arkansas 2	368/82-009	4	CEAC failed during excore instrumentation test.
31	Arkansas 2	368/82-040	4	CEAC failed, possibly as a result of lighting storm.
32	Waterford 3	382/86-009	1	Reactor trip caused by reed switch failure.
33	St. Lucie 2	389/83-047	7	Pulse counting CEA position system inoperable due to loss of computer.
34	San Onofre 3	362/84-024	1	Intermittent failure on computer board caused CEAC malfunction and reactor trip.
35	Palo Verde 1	528/89-004	4	CEAC inoperable due to failed processor board caused reactor scram.
36	San Onofre 2	361/84-043	2	Failed power supply in analog CEA position indication system, caused reactor scram and ESF actuation.
37	San Onofre 2	361/84-019	2	Faulty CEAC caused spurious position signals which caused reactor trip.
38	Calvert Cliffs 1	317/81-081	7	Primary CEA position indication lights and analog system malfunctioned.

Table A-6 (Cont'd.)

	Plant	LER	Age at Failure (years)	Failure Description
39	San Onofre 2	361/83-041	1	CEAC inoperable due to faulty isolation amplifier card due to overheating in the cabinet.

Table A-7. Human Error

	Plant	LER No.	Age at Failure (years)	Failure Description
1	Calvert Cliffs 2	318/80-015	4	While changing backup power supply, the prime 15V CEA power supply was accidently grounded by electrician causing CEA to drop.
2	Calvert Cliffs 2	318/82-018	6	Electricians mistakenly started work on unit 2 CEA's instead of unit 1, causing CEA drop.
3	Calvert Cliffs 2	318/83-071	7	PDIL was rendered inoperable due to incorrect setpoints out of tolerance due to personnel error.
4	Calvert Cliffs 2	318/87-008	11	Upper gripper power switch for incorrect CEA was removed for maintenance, causing dropped CEA and manual shutdown.
5	St. Lucie 1	335/80-033	4	Technician shorted 15V power supply while taking measurements, causing rod drop and power reduction.
6	St. Lucie 1	335/80-040	4	While performing maintenance on drive control system, CEA dropped.
7	San Onofre 2	361/88-031	6	Rod drop test procedure did not correctly account for delay time during rod drop. Some rods may have exceeded requirements.
8	San Onofre 3	362/83-086	1	Technician interrupted power supply voltage to 23 CEA's during SU test, rendering CEAC inoperable.
9	Arkansas 2	368/85/015	7	While troubleshooting CEAC, electronic transient caused erroneous PI signal, causing DNBR trip. Procedures modified.
10	Arkansas 2	368/88-009	10	Rod drop test procedure did not correctly account for delay time during rod drop.
11	Waterford 3	382/85-051	1	While performing surveillance on CEAC, a incorrect constant was entered, which caused reactor trip.
12	Waterford 3	382/87-012	2	Inadequate procedure allowed both CEAC's to be inoperable, resulting in reactor trip.
13	St. Lucie 2	389/85-006	2	Technician pulled wrong circuit card during troubleshooting causing 2 dropped CEA's.
14	Palo Verde 2	529/87-003	1	Procedural inadequacy did not require position verification for all CEA groups upon loss of CEAC.
15	Calvert Cliffs 2	318/87-008	11	Technicians removed power switch module for wrong CEA causing rod drop and reactor scram.
16	St. Lucie 1	335/86-005	10	During SD, problems were encountered with DDPS, which required reloading with a magnetic tape containing incorrect sensitivity factors. The technical manual did not require verification of sensitivity factors.
17	Arkansas 2	368/80-057	2	CEAC inputs to CPC were inoperable due to personnel error, during maintenance.

Table A-7 (Cont'd.)

	Plant	LER No.	Age at Failure (years)	Failure Description
18	St. Lucie 2	389/83-074	7	Pulse counting CEA position indicating system inoperable due to programming error.

Table A-8. Unknown Cause

	Plant	LER No.	Age at Failure (years)	Failure Description
1	Calvert Cliffs 1	317/82-011	8	CEA dropped, power reduced.
2	Calvert Cliffs 2	318/80-007	4	CEA would not drive down electrically. During troubleshooting of control circuitry, rod became operable.
3	St. Lucie 1	335/82-051	6	While at full power, CEA dropped for unknown reason.
4	St. Lucie 1	335/82-069	6	While at full power, CEA dropped for unknown reasons.
5	St. Lucie 1	335/83-006	7	CEA slipped during CEA exercising, no cause found.
6	St. Lucie 1	335/83-007	7	CEA slipped during normal full power operation. No cause found.
7	St. Lucie 1	335/82-061	6	During rod positioning to minimize guide tube wear, rod dropped for unknown cause.
8	St. Lucie 1	335/85-005	9	While at full power, rod dropped for unknown reason.
9	San Onofre 2	361/83-155	1	CEAC declared inoperable due to spurious CEA position indication. No reason found.
10	Ft. Calhoun	285/82-005	9	CEA dropped while at full power for unknown cause. Power reduction.
11	Millstone 2	336/80-040	6	CEA dropped for unknown reasons while at full power.
12	Millstone 2	336/81-038	7	During routine CEA movement, rod dropped for unknown reasons.
13	Millstone 2	336/83-004	9	During routine surveillance, CEA dropped for unknown reasons. Power reduction.
14	Millstone 2	336/83-015	9	While at full power, rod dropped for unknown reasons. Power reduced.
15	Arkansas 2	368/84-013	6	Reactor trip from full power due to CEA drop for unknown cause.
16	St. Lucie I	335/81-027	5	CEA dropped for unknown reason.
17	St. Lucie 1	335/81-034	5	CEA dropped during normal CEA exercise for unknown reason.
18	St. Lucie 1	335/82-028	6	During normal CEA periodic CEA exercise, CEA dropped for unknown reason.
19	Calvert Cliffs 1	317/80-012	6	CEA dropped while performing routine surveillance test.
20	Calvert Cliffs 1	317/80-006	6	CEA dropped while performing routine surveillance test.
21	Calvert Cliffs 1	317/81-039	7	While performing routine maintenance test, CEA dropped for unknown reason. Power reduction.

Table A-8 (Cont'd.)

	Plant	LER No.	Age at Failure (years)	Failure Description
22	Calvert Cliffs 1	317/82-036	8	During start up tests, rod dropped for no reason.
23	Calvert Cliffs 2	318/80-009	4	CEA dropped during performance of routine test for unknown reason.
24	Calvert Cliffs 2	318/83-076	7	During routine surveillance, tests over 30 day period, 2 CEA's have dropped into core with subsequent power reduction. No cause found.
25	St. Lucie 2	389/87-005	4	While at 100% power, 2 CEA's dropped into core for no apparent reason. Reactor shutdown.

Table A-9. Miscellaneous

	Plant	LER No.	Age at Failure (years)	Failure Description
1	Millstone 2	336/83-026	9	Top nozzle damage caused guide tube deformation.
2	Calvert Cliffs 2	318/83-060	7	Water from overflowing control room toilet seeped into cable spreading room where it shorted out coil power programmer components.

Appendix B

Summary of Licensee Event Reports for Babcock & Wilcox
Control Rod Drive System
1980 - 1989

Table B-1	Cable and Connector LER's
Table B-2	CRD Control System LER's
Table B-3	CRDM LER's
Table B-4	Rod Position Indication LER's
Table B-5	Human Error LER's
Table B-6	Potential Loose Parts LER's

Table B-1. Cable and Conector LER's

	Plant	LER No.	Age at Failure (years)	Failure Description
1	Oconee 1	269/80-027	7	Power reduction resulted from dropped rod. C phase on stator opened due to loose connector.
2	Oconee 1	269/87-010	14	Control power lost to control rods due to loose solder joint on a control rod sequencing card. Resultant reactor trip.
3	Davis Besse	346/81-012	4	Electrical noise from faulty penetration module caused faulty position indication.
4	Davis Besse	346/81-019	4	Faulty rod position indication caused by faulty API pentration module.
5	Davis Besse	346/81-061	4	Erratic API signals due to faulty penetration module.

Table B-2. CRD Control System LER's

	Plant	LER No.	Age at Failure (years)	Failure Description
1	Arkansas 1	313/83-024	9	Control rod group misalignment due to out movement restriction resulting in pole slippage.
2	Arkansas 1	313/88-003	14	Control rod group dropped due to malfunction of power sequencer programmer. Reactor trip.
3	Davis Besse	346/80-023	3	Failed 24 VDC power supply in programmer controller in group SCR supply cabinet caused improper rod movement. Reactor trip.
4	Davis Besse	346/82-011	5	Control rod drop due to blown fuse in transfer switch module. Power reduction.
5	Davis Besse	346/83-014	6	Rod drop due to blown fuse in transfer switch module.
6	Davis Besse	346/83-054	6	RPI inoperable due to failed phase of motor programmer.
7	Davis Besse	346/83-068	6	Rod drop due to failed fuse in motor programmer. Power reduction.
8	Davis Besse	346/83-071	6	Faulty motor power return SCR gate drive circuit caused RPI failure. Power reduction.
9	Davis Besse	346/84-001	7	Faulty logic card rendered APSRA's inoperable. Reactor power reduction.
10	Davis Besse	346/83-062	6	Reactor trip due to failed programmer board in CRDCS cabinets. Excessive dust in cabinets from concrete work.

Table B-3. CRDM LER's

	Plant	LER No.	Age at Failure (years)	Failure Description
1	Arkansas 1	313/82-020	8	Dropped rod due to stator failure. Reactor trip.
2	Davis Besse	346/81-038	4	Unable to withdraw rod due to fractured leaf spring on anti-rotational device. Reactor scram.
3	Davis Besse	346/85-006	8	Failed leaf spring setscrew prevented disengagement of lead screw. Failed TS drop time requirement.

Table B-4. Rod Position Indication LER's

	Plant	LER N	Age at Failure (years)	Failure Description
1	Crystal River	302/82-035	5	Reed switch failure rendered API system inoperable.
2	Crystal River	302/83-006	6	API system inoperable due to failed reed switch.
3	Crystal River	302/83-061	6	API system inoperable due to failed reed switch.
4	Crystal River	302/85-023	8	Low voltage failure rendered RPI system inoperable. Reactor trip.
5	Crystal River	302/86-011	9	Relay failure in RPI circuitry rendered system inoperable.
6	Davis Besse	346/80-004	3	Lost rod position indicator due to failed reed switch caused by excessive high temperature.
7	Davis Besse	346/80-013	3	API malfunction caused by blown fuse in power supply. Delayed SU.
8	Davis Besse	346/80-015	3	API system inoperable due to reed switch failure caused by excessive high temperature.
9	Davis Besse	346/80-025	3	Excessive high temperatures caused reed switch failure. API inoperable.
10	Davis Besse	346/80-015	3	Reed switch failure caused by excessive high temperature. API inoperable.

Table B-5. Human Error LER's

	Plant	LER No.	Age at Failure (years)	Failure Description
1	Davis Besse	346/88-029	11	Rod drop due to maintenance error while performing work on CRDCS. Power reduction.

Table B-6. Potential Loose Parts LER's

	Plant	LER No.	Age at Failure (years)	Failure Description
1	Oconee 1	269/80-015	7	Broken fuel assembly holddown springs.
2	Oconee 1	269/81-011	8	Broken lower thermal shield bolts.
3	Oconee 1	269/83-013	10	Broken fuel assembly holddown springs.
4	Oconee 2	270/82-002	9	Failed lower thermal shield bolts.
5	Oconee 3	287/82-007	8	Broken fuel assembly holddown springs.
6	Oconee 3	287/82-008	8	Failed bolts for core barrel thermal shield.
7	Oconee 3	287/87-001	13	Debris from failed reactor coolant pump lodged in fuel assembly.
8	Crystal River	302/80-019	3	Failed fuel assembly holddown springs.
9	Davis Besse	346/80-040	3	Twenty broken fuel assembly holddown springs.
10	Davis Besse	346/88-015	11	Debris found in reactor vessel prior to refuel.