U.S. DEPARTMENT OF ENERGY

OCRWM

YUCCA MOUNTAIN

YUCCA MOUNTAIN SITE CHARACTERIZATION PROJECT

Document No. YMP/CM-0024
Revision Rev. 0 ICN 1
CI No. N/A
Date 09/21/94
WBS No. 1.2.1.2
QA Level QA

PROJECT BASELINE DOCUMENT

ENGINEERED BARRIER DESIGN REQUIREMENTS DOCUMENT

CHANGES TO THIS DOCUMENT REQUIRE PREPARATION AND APPROVAL OF A CHANGE REQUEST IN ACCORDANCE WITH PROJECT AP-3.3Q

UNITED STATES DEPARTMENT OF ENERGY
YUCCA MOUNTAIN SITE CHARACTERIZATION PROJECT OFFICE

YMP-035-R0
04/22/91

YUCCA MOUNTAIN SITE CHARACTERIZATION PROJECT
DOCUMENT CHANGE NOTICE (DCN) RECORD

1 Document Title:	2 Document Number:
Engineered Barrier Design Requirements Document (EBDRD)	YMP/CM-0024

The document identified in Blocks 1 and 2 has been changed. The changed pages attached to this DCN are identified in Block 7 opposite the latest DCN number in Block 3. The original issue of this document as modified by all applicable DCN's constitutes the current version of the document identified in Blocks 1 and 2.

3 DCN NO.	4 CR NO.	5 DOCUMENT Rev./ICN #	6 CR TITLE	7 AFFECTED PAGES	CHANGE	ADD	DELETE	8 DATE
001	94/388	Rev. 0, ICN-1	ICN 1 to the Engineered Barrier Design Requirements Document Add a statement providing the status of the EBDRD	xvi		X		8/31/94

YMP-034-R2
11/13/91

YUCCA MOUNTAIN SITE CHARACTERIZATION PROJECT
CHANGE DIRECTIVE (CD)

1 CR No. 94/388
Page 1 of 2

SECTION I. IDENTIFICATION

2 Title of Change:

ICN 1 to the Engineered Barrier Design Requirements Document

3 Change Classification:

☐ 0 ☒ 2
☐ 1 ☐ 3

SECTION II. DISPOSITION

4 CR Disposition:

☒ Approved ☐ Approved with Conditions ☐ Disapproved

5 Conditions: *(if applicable)*

None.

(See Change Documentation Continuation Page ___)

6 Implementation Direction: *(if applicable)*

1. This CR for the Engineered Barrier Design Requirements Document ICN-1 is approved.

2. The CCB Secretary shall ensure that the Cover and Title pages for Document Number YMP/CM-0024, Revision 0, ICN-1 are prepared.

3. Within 10 working days of the signature of this CD, the Document Custodian shall provide a print ready copy of the Document YMP/CM-0024, Revision 0, ICN-1, with the Document Number and revision date identified on each page

(See Change Documentation Continuation Page 2)

SECTION III. CONCURRENCE

All signatures below constitute procedural compliance. I have read, understood, and complied with Procedure QMP-03-09, Rev. 3, ICN # 4, in accomplishing my responsibilities in this procedure.

7 Quality Assurance Organization Concurrence

Name: R. E. Spence (Print) Org.: YMQAD (Print)

Signature: [signature] Date: 9/13/94

8 Disposition Authority

Name: J. Russell Dyer (Print) Title: CCB Chrprsn (Print)

Signature: [signature] Date: 9/13/94

9 CD Effective Date

9/13/94

6 Implementation Direction (continued)

of the publication ready copy.

4. The CCB Secretary shall ensure that the Document YMP/CM-0024, Revision 0, ICN-1,is prepared in accordance with this change directive. The CCB Secretary shall prepare a Controlled Document Issuance Authorization (CDIA) to transmit this CD and YMP/CM-0024, Revision 0, ICN-1 to the Project Document Control Center (DCC) in accordance with AP-1.5Q.

5. Per AP-3.3Q, each Project Office Division Director (DD) and Technical Project Officer (TPO) shall complete an Affected Document Notice (ADN) as notification of completion of implementation for this CD. This review shall include all appropriate documents for which the DD or TPO are responsible, whether or not these documents are under CCB Control (e.g. Participant Procedures, Participant Analyses).

   Each DD and TPO shall identify the personnel who perform the affected document review and ensure that these individuals are qualified to perform the review.

6. The CCB Secretary shall ensure that the Configuration Information System (CIS) and the CCB Register are updated to reflect the approved status change of this Document YMP/CM-0024, Revision 0, ICN-1.

7. Any changes to Document YMP/CM-0024, Revision 0, ICN-1 will require submittal of a CR to the Project CCB.

YMP-034-R2
11/13/91

YUCCA MOUNTAIN SITE CHARACTERIZATION PROJECT
CHANGE DIRECTIVE (CD)

1 CR No. 93/433
Page 1 of 2

SECTION I. IDENTIFICATION

2 Title of Change:
Engineered Barrier Design Requirements Document

3 Change Classification:
☐ 0 ☒ 2
☐ 1 ☐ 3

SECTION II. DISPOSITION

4 CR Disposition:
☒ Approved ☐ Approved with Conditions ☐ Disapproved

5 Conditions: *(if applicable)*

None.

(See Change Documentation Continuation Page ___)

6 Implementation Direction: *(if applicable)*

1. This CR for the Engineered Barrier Design Requirements Document is approved as a Project Baseline Document and is assigned Document Number YMP/CM-0024, Revision 0.

2. The CCB Secretary shall ensure that the Cover and Title pages for Document Number YMP/CM-0024, Revision 0 are prepared.

3. Within 10 working days of the signature of this CD, the Document Custodian shall provide a print ready copy of the Document YMP/CM-0024, Revision 0

(See Change Documentation Continuation Page 2)

SECTION III. CONCURRENCE

All signatures below constitute procedural compliance. I have read, understood, and complied with Procedure QMP-03-09 Rev. 3, ICN # 3, in accomplishing my responsibilities in this procedure.

7 Quality Assurance Organization Concurrence

Name: R. E. Spence (Print) Org.: YMQAD (Print)
Signature: R E Spence Date: 7/29/93

8 Disposition Authority

Name: M. B. Blanchard (Print) Title: CCB Chrprsn (Print)
Signature: M B Blanchard Date: 7/29/93

9 CD Effective Date
7/29/93

6 Implementation Direction (continued)

with the Document Number and revision date identified on each page of the publication ready copy.

4. The CCB Secretary shall ensure that the Document YMP/CM-0024, Revision 0, is prepared in accordance with this change directive. The CCB Secretary shall prepare a Controlled Document Issuance Authorization (CDIA) to transmit this CD and YMP/CM-0024, Revision 0 to the Project Document Control Center (DCC) in accordance with AP-1.5Q.

5. Per AP-3.3Q, each TPO and Project Office Division Director shall complete an Affected Document Notice (ADN) as notification of completion of implementation for this CD. This review shall include all appropriate documents for which the DD or TPO are responsible, whether or not these documents are under CCB Control (e.g. Participant Procedure, Participant Analyses).

   Each DD and TPO shall identify the personnel who perform the affected document review and ensure that these individuals are qualified to perform the review.

   The documents reviewed shall be identified, the required changes for each document shall be identified or indication made that no change is required (see attachment #1) and a recommended schedule for implementating the changes to come into compliance with YMP/CM-0024 shall be proposed. A Preliminary impact analysis was performed and is documented in the CR which is provided with this Directive as guidance.

6. The CCB Secretary shall ensure that the Configuration Information System (CIS) and the CCB Register are updated to reflect the approved status change of this Document YMP/CM-0024, Revision 0.

7. Any changes to Document YMP/CM-0024, Revision 0 will require submittal of a CR to the Project CCB.

8. YMP/CM-0024, Revision 0, will be effective concurrent with YMP/CM-0023 (RDRD) in accordance with the effectivity requirements of DCP-56.

ATTACHMENT #1

Document Reviewed	Reviewer	Description Req'd Chgs	Planned Implementation

YUCCA MOUNTAIN SITE CHARACTERIZATION PROJECT

ENGINEERED BARRIER DESIGN REQUIREMENTS DOCUMENT

REVISION 0

JULY 1993

Prepared for

U.S. Department of Energy
Office of Civilian Radioactive Waste Management

Prepared for the Yucca Mountain Site Characterization Project as part of the Civilian Radioactive Waste Management Program. The Yucca Mountain Site Characterization Project is managed by the Yucca Mountain Site Characterization Project Office of the U.S. Department of Energy. The Yucca Mountain Site Characterization Project work is sponsored by the U.S. Department of Energy Office of Civilian Radioactive Waste Management.

YUCCA MOUNTAIN SITE CHARACTERIZATION PROJECT

ENGINEERED BARRIER DESIGN REQUIREMENTS DOCUMENT

for Maxwell Blanchard

Carl P. Gertz, Project Manager
Yucca Mountain Site Characterization Project

7-16-93
Date

Edgar Martin for

William B. Simecka, Director
Engineering & Development Division
Yucca Mountain Site Characterization Project

7/16/93
Date

R. E. Spence

Richard E. Spence, Director
Yucca Mountain Quality Assurance Division
Yucca Mountain Site Characterization Project

7/16/93
Date

YUCCA MOUNTAIN SITE CHARACTERIZATION PROJECT

ENGINEERED BARRIER DESIGN REQUIREMENTS DOCUMENT

TABLE OF CONTENTS

Page

1. SCOPE 1-1
   1.1 IDENTIFICATION 1-1
   1.2 PURPOSE OF DOCUMENT 1-1
   1.3 SYSTEM OVERVIEW 1-1
      1.3.1 MINED GEOLOGIC DISPOSAL SYSTEM BACKGROUND 1-1
      1.3.2 MINED GEOLOGIC DISPOSAL SYSTEM FUNCTIONS 1-2
      1.3.3 SYSTEM CONCEPT 1-2
      1.3.4 ENGINEERED BARRIER SEGMENT DESCRIPTION 1-3
      1.3.5 ENGINEERED BARRIER SEGMENT MISSION 1-3
      1.3.6 ENGINEERED BARRIER SEGMENT PERIOD OF PERFORMANCE 1-5
   1.4 DOCUMENT ORGANIZATION AND DESCRIPTION 1-5
      1.4.1 REQUIREMENTS DOCUMENTS HIERARCHY 1-5
      1.4.2 DOCUMENT ORGANIZATION 1-5
      1.4.3 DESCRIPTION 1-8

2. APPLICABLE DOCUMENTS 2-1
   2.1 FEDERAL LAWS AND DOCUMENTS 2-1
      2.1.1 LAW, STATUTES, U.S. CODES, AND TREATIES 2-1
      2.1.2 CODE OF FEDERAL REGULATIONS AND EXECUTIVE ORDERS 2-1
      2.1.3 OTHER DOCUMENTS, ORDERS, AND DIRECTIVES 2-2
   2.2 STATE LAWS AND TRIBAL LAWS 2-2
   2.3 LOCAL ORDINANCES 2-2
   2.4 NONGOVERNMENT DOCUMENTS 2-2
      2.4.1 NATIONAL AND INTERNATIONAL STANDARDS 2-2
      2.4.2 OTHER PUBLICATIONS 2-3
   2.5 OTHER REFERENCES 2-3

3. REQUIREMENTS 3-1
   3.1 SYSTEM DEFINITION 3-1
      3.1.1 MINED GEOLOGIC DISPOSAL SYSTEM FUNCTIONS 3-1
         3.1.1.1 ISOLATE WASTE - FUNCTION 1.4.3 3-5
         3.1.1.2 EVALUATE SYSTEM PERFORMANCE - FUNCTION 1.4.4 3-5
      3.1.2 MINED GEOLOGIC DISPOSAL SYSTEM ARCHITECTURE DESCRIPTION 3-5
      3.1.3 ENGINEERED BARRIER SEGMENT FUNCTIONS 3-5
      3.1.4 ENGINEERED BARRIER SEGMENT ARCHITECTURE DESCRIPTION 3-5
      3.1.5 MAJOR CONSIDERATIONS AND ASSUMPTIONS 3-8
   3.2 CHARACTERISTICS 3-10
      3.2.1 PERFORMANCE CHARACTERISTICS 3-10
         3.2.1.1 CONSTRUCTION MODE REQUIREMENTS 3-11
         3.2.1.2 EMPLACEMENT MODE REQUIREMENTS 3-11
         3.2.1.3 CARETAKER MODE REQUIREMENTS 3-12

TABLE OF CONTENTS (continued)

Page

3.2.1.4 RETRIEVAL MODE REQUIREMENTS 3-12
3.2.1.5 CLOSURE AND DECOMMISSIONING MODE REQUIREMENTS 3-13
3.2.1.6 POST-CLOSURE MODE REQUIREMENTS 3-13
3.2.1.7 OFF-NORMAL MODE REQUIREMENTS 3-13
3.2.2 RADIOLOGICAL PROTECTION 3-14
3.2.2.1 GENERAL REQUIREMENTS 3-14
3.2.2.2 PERSONNEL PROTECTION 3-14
3.2.2.3 PUBLIC PROTECTION 3-15
3.2.2.4 AIRBORNE RADIOACTIVE MATERIAL CONTROL 3-15
3.2.2.5 RADIATION MONITORING 3-15
3.2.2.6 CRITICALITY PROTECTION 3-15
3.2.2.7 LOW LEVEL WASTE DISPOSAL 3-16
3.2.2.8 TRANSPORTATION PROTECTION 3-16
3.2.3 INTERFACE REQUIREMENTS 3-16
3.2.3.1 ENGINEERED BARRIER SEGMENT - GEOLOGIC SETTING INTERFACE REQUIREMENTS 3-16
3.2.3.2 ENGINEERED BARRIER SEGMENT - SITE SEGMENT INTERFACE REQUIREMENTS 3-19
3.2.3.3 ENGINEERED BARRIER SEGMENT - REPOSITORY SEGMENT INTERFACE REQUIREMENTS 3-19
3.2.3.4 ENGINEERED BARRIER SEGMENT - WASTE ACCEPTANCE INTERFACE REQUIREMENTS 3-25
3.2.3.5 ENGINEERED BARRIER SEGMENT - TRANSPORTATION INTERFACE REQUIREMENTS 3-27
3.2.4 PHYSICAL CHARACTERISTICS 3-27
3.2.4.1 PROTECTIVE COATINGS AND MATERIALS 3-27
3.2.4.2 HABITABILITY 3-28
3.2.4.3 SECURITY 3-28
3.2.4.4 RADIOACTIVE MATERIALS MONITORING 3-28
3.2.4.5 SHIELDING 3-28
3.2.4.6 DESIGN BASIS EVENTS 3-28
3.2.5 SYSTEM QUALITY FACTORS 3-28
3.2.5.1 RELIABILITY 3-28
3.2.5.1.1 RELIABILITY PROGRAM REQUIREMENTS 3-29
3.2.5.1.2 RELIABILITY OF EQUIPMENT 3-29
3.2.5.1.3 STRUCTURE, SYSTEM, AND COMPONENT RELIABILITY 3-30
3.2.5.1.4 UTILITIES RELIABILITY 3-30
3.2.5.1.5 SYSTEM THROUGHPUT 3-30
3.2.5.2 MAINTAINABILITY/INSPECTABILITY 3-30
3.2.5.2.1 TESTING AND MAINTENANCE 3-30
3.2.5.2.2 PHYSICAL CLEARANCE 3-30
3.2.5.2.3 MEAN TIME TO REPAIR 3-30
3.2.5.2.4 REPLACEMENT EQUIPMENT 3-30
3.2.5.2.5 FAULT ISOLATION 3-31
3.2.5.2.6 MAINTENANCE IN RADIOACTIVE ENVIRONMENTS 3-31

TABLE OF CONTENTS (continued)

Page

3.2.5.2.7 IMPORTANT TO SAFETY EQUIPMENT 3-31
3.2.5.2.8 DESIGN FOR MAINTAINABILITY 3-31
3.2.5.2.9 MEAN DOWNTIME 3-32
3.2.5.3 AVAILABILITY 3-32
3.2.5.4 SERVICE LIFE 3-32
3.2.5.5 OVERALL UTILIZATION 3-33
3.2.6 ENVIRONMENTAL REQUIREMENTS 3-33
3.2.6.1 NATURAL ENVIRONMENT 3-33
3.2.6.2 INDUCED ENVIRONMENT 3-34
3.2.6.2.1 FIRE, EXPLOSION, AND OTHER DISASTER PROTECTION 3-34
3.2.6.2.2 FIRE RESISTANCE 3-34
3.2.6.2.3 VIBRATION 3-34
3.2.6.2.4 CREEP AND SHRINKAGE 3-34
3.2.6.2.5 UNDERGROUND OPENINGS 3-34
3.2.7 TRANSPORTABILITY/MODULARITY 3-34
3.2.8 FLEXIBILITY, EXPANSION, AND INTEGRATION 3-35
3.2.9 PORTABILITY AND LOAD CARRYING 3-35
3.3 DESIGN AND CONSTRUCTION 3-35
3.3.1 GENERAL DESIGN CRITERIA 3-35
3.3.2 ELECTROMAGNETIC RADIATION 3-36
3.3.3 NAMEPLATES AND MARKINGS 3-37
3.3.4 WORKMANSHIP 3-38
3.3.5 INTERCHANGEABILITY 3-38
3.3.6 SAFETY 3-39
3.3.6.1 GENERAL REQUIREMENTS 3-39
3.3.6.2 SYSTEM SAFETY PRECEDENCE 3-39
3.3.6.3 FACILITIES, EQUIPMENT, AND MATERIALS PROTECTIVE MEASURES 3-40
3.3.6.4 PERSONNEL PROTECTIVE EQUIPMENT 3-40
3.3.6.5 SUBSURFACE PROTECTIVE MEASURES 3-40
3.3.6.6 SAFETY LABELS AND PLACARDS 3-40
3.3.6.7 EMERGENCY LIGHTING 3-40
3.3.6.8 EQUIPMENT RELATED HAZARDS 3-40
3.3.6.9 POSTING REQUIREMENTS 3-41
3.3.6.10 WORK PLATFORMS 3-41
3.3.6.11 ELECTRICAL SAFETY 3-41
3.3.7 HUMAN FACTORS ENGINEERING 3-41
3.3.8 METHODS AND CONTROLS 3-41
3.3.8.1 MATERIAL MANAGEMENT 3-41
3.3.8.2 INVENTORY CONTROL 3-42
3.3.9 GOVERNMENT FURNISHED PROPERTY 3-42
3.3.10 COMPUTER RESOURCES 3-42
3.3.11 ENVIRONMENTAL PROTECTION REQUIREMENTS 3-42
3.4 DOCUMENTATION 3-42
3.4.1 SPECIFICATIONS 3-42

TABLE OF CONTENTS (continued)

Page

3.4.2 DRAWINGS 3-42
3.4.3 MAINTENANCE, OPERATORS, AND TECHNICAL MANUALS 3-43
3.4.4 TEST PLANS AND PROCEDURES 3-43
3.4.5 QUALITY ASSURANCE DOCUMENTATION 3-43
3.4.6 CONSTRUCTION RECORDS 3-43
3.4.7 COMPUTER DOCUMENTATION 3-43
3.4.8 RECORDS MANAGEMENT 3-43
3.5 LOGISTICS 3-43
3.5.1 MAINTENANCE 3-44
3.5.1.1 EQUIPMENT MAINTENANCE 3-44
3.5.1.1.1 ON-LINE MAINTENANCE 3-44
3.5.1.1.2 INTERMEDIATE MAINTENANCE 3-44
3.5.1.1.3 SALVAGING, OFF-SITE REPAIR, AND VENDOR REPAIR 3-44
3.5.1.2 CALIBRATION MAINTENANCE 3-45
3.5.1.3 CASK MAINTENANCE 3-45
3.5.1.4 STANDARDIZATION 3-45
3.5.1.5 SECURITY EQUIPMENT MAINTENANCE 3-45
3.5.2 SUPPLY 3-45
3.5.3 FACILITIES 3-45
3.5.3.1 WAREHOUSE REQUIREMENTS 3-45
3.5.4 SUPPORT AND TEST EQUIPMENT 3-46
3.6 PERSONNEL AND TRAINING 3-46
3.6.1 PERSONNEL 3-46
3.6.2 TRAINING 3-46
3.6.2.1 GENERAL REQUIREMENTS 3-46
3.7 ENGINEERED BARRIER SEGMENT MAJOR COMPONENT CHARACTERISTICS/REQUIREMENTS 3-47
3.7.1 WASTE PACKAGE SUBSYSTEM REQUIREMENTS 3-49
3.7.1.1 WASTE FORM REQUIREMENTS 3-51
3.7.1.2 WASTE CONTAINER REQUIREMENTS 3-52
3.7.1.3 INTERNAL STRUCTURE REQUIREMENTS 3-53
3.7.1.4 ADDITIONAL CONTAINERS, PACKING, SHIELDING, AND ABSORBING MATERIALS REQUIREMENTS 3-54
3.7.2 BACKFILL REQUIREMENTS 3-54
3.7.3 EMPLACEMENT HARDWARE REQUIREMENTS 3-55
3.8 PRECEDENCE 3-55
3.9 QUALIFICATION/QUALITY ASSURANCE 3-55

4. CONFORMANCE VERIFICATION 4-1
4.1 GENERAL 4-1
4.2 METHODS 4-1
4.3 CROSS REFERENCE 4-2
4.4 VERIFICATION 4-2

5. PREPARATION FOR OPERATIONS 5-1

TABLE OF CONTENTS (continued)

Page

6. NOTES 6-1
   6.1 DEFINITIONS 6-1
   6.2 ACRONYMS AND ABBREVIATIONS 6-7
   6.3 REQUIREMENTS CROSS REFERENCE 6-8

APPENDIX A MGDS-RD TRACEABILITY MATRIX A-1

YUCCA MOUNTAIN SITE CHARACTERIZATION PROJECT

ENGINEERED BARRIER DESIGN REQUIREMENTS DOCUMENT

LIST OF FIGURES

Figure	Title	Page
1-1	NOTIONAL LAYOUT OF THE ENGINEERED BARRIER SEGMENT - VERTICAL AND HORIZONTAL BOREHOLE AND IN-DRIFT WASTE EMPLACEMENT CONCEPTS (TBD)	1-4
1-2	OCRWM DOCUMENT HIERARCHY	1-6
1-3	CIVILIAN RADIOACTIVE WASTE MANAGEMENT SYSTEM	1-7
3-1	MANAGE WASTE DISPOSAL FUNCTIONAL FLOW (1.0)	3-2
3-2	DISPOSE OF WASTE FUNCTIONAL FLOW (1.4)	3-3
3-3	MGDS ARCHITECTURE	3-6
3-4	DESCRIPTION OF MGDS SEGMENTS	3-7
3-5	ENGINEERED BARRIER SEGMENT ARCHITECTURE	3-9
3-6	RELATIONSHIP BETWEEN THE COMPONENTS OF THE WASTE PACKAGE - DRIFT EMPLACEMENT CONCEPT (TBD)	3-48

LIST OF TABLES

Table	Title	Page
3-1	MGDS FUNCTIONS ALLOCATED TO SEGMENTS	3-4
3-2	ENGINEERED BARRIER SEGMENT FUNCTIONS ALLOCATED TO COMPONENTS (TBV)	3-8
3-3	WATER QUALITY PARAMETERS (TBV)	3-18
3-4	REPOSITORY SEGMENT FUNCTIONS IN SUPPORT OF THE ENGINEERED BARRIER SEGMENT	3-20
4-1	CONFORMANCE VERIFICATION MATRIX (TBV)	4-3
6-1	REQUIREMENTS CROSS REFERENCE	6-9

ENGINEERED BARRIER DESIGN REQUIREMENTS DOCUMENT

TBR LOG

DOCUMENT/REVISION NUMBER 0

SECTION OR PARAGRAPH	RESOLUTION ORGANIZATION	RESOLUTION SCHEDULE DATE	BRIEF DESCRIPTION
3.2.1.6.B	YMP	TBD	40 CFR 191
3.2.1.6.B	YMP	TBD	40 CFR 191.13(a)
3.2.2.1.B.3	YMP	TBD	Annual dose equivalent
3.2.2.1.B.3	YMP	TBD	40 CFR 191.03(a)(1)
3.2.3.1.A.2	YMP	TBD	Millirems to the whole body
3.2.3.1.A.2	YMP	TBD	Millirems to any critical organ
3.2.3.1.A.2	YMP	TBD	40 CFR 191.15
3.2.3.1.A.3.a	YMP	TBD	Amounts of radium-226 and radium-228
3.2.3.1.A.3.b	YMP	TBD	Amounts of alpha emitting radionuclides
3.2.3.1.A.3.c	YMP	TBD	Annual dose equivalent to the body
3.2.3.1.A.3.c	YMP	TBD	40 CFR 191.16(a)
3.2.3.1.A.4	YMP	TBD	40 CFR 191.16(b)
3.7	YMP	TBD	Containing waste from 300 to 1,000 years
3.7.D	YMP	TBD	Containing waste from 300 to 1,000 years
3.7.1.2.B	YMP	TBD	Containing waste from 300 to 1,000 years

ENGINEERED BARRIER DESIGN REQUIREMENTS DOCUMENT

TBV LOG

DOCUMENT/REVISION NUMBER 0

SECTION OR PARAGRAPH	VERIFICATION/ VALIDATION ORGANIZATION	VERIFICATION/ VALIDATION SCHEDULE DATE	BRIEF DESCRIPTION
Table 3-2	YMP	TBD	Functions allocated to segments
Table 3-3	YMP	TBD	Water quality parameters
Table 4-1	YMP	TBD	Conformance Verification Matrix
3.2.3.1.A.5	YMP	TBD	Water chemistry conditions
3.2.3.3.A.8.a	YMP	TBD	Water in emplacement area
3.2.3.3.A.8.c	YMP	TBD	Water contacting waste packages
3.2.3.3.A.10.a	YMP	TBD	Oxidation through cladding defects
3.2.3.3.A.10.b	YMP	TBD	Cladding failure from mechanical abrasion
3.2.3.4.A.1	YMP	TBD	Canisterized high-level radioactive waste (HLW)
3.2.3.4.A.1.a	YMP	TBD	HLW total length
3.2.3.4.A.1.b	YMP	TBD	HLW diameter
3.2.3.4.A.1.c	YMP	TBD	HLW weight
3.2.3.4.A.1.d	YMP	TBD	HLW fill height
3.2.3.4.A.1.e	YMP	TBD	HLW total heat generation rate
3.2.3.4.A.1.f	YMP	TBD	HLW waste temperature
3.2.3.4.A.5	YMP	TBD	Gamma dose rate
3.2.3.4.A.5	YMP	TBD	Neutron dose rate
3.2.3.4.C.1.a	YMP	TBD	Spent Nuclear Fuel (SNF) total length
3.2.3.4.C.1.b	YMP	TBD	SNF cross section
3.2.3.4.C.2	YMP	TBD	SNF temperature
3.2.5.2.7	YMP	TBD	Equipment important to safety
3.2.5.2.8.B	YMP	TBD	Maintainability of engineered hardware

ENGINEERED BARRIER DESIGN REQUIREMENTS DOCUMENT

TBV LOG

DOCUMENT/REVISION NUMBER 0

SECTION OR PARAGRAPH	VERIFICATION/ VALIDATION ORGANIZATION	VERIFICATION/ VALIDATION SCHEDULE DATE	BRIEF DESCRIPTION
3.2.5.2.8.C	YMP	TBD	Facility support equipment maintainability
3.2.5.2.8.D	YMP	TBD	Maintainability of equipment, facilities and systems
3.7.G.1	YMP	TBD	Borehole wall temperature
3.7.G.2	YMP	TBD	Maximum temperature 1m into rock
3.7.G.3	YMP	TBD	Topopah Springs welded unit 3 (TSw3) maximum temperature
3.7.G.4	YMP	TBD	Surface temperature
3.7.G.5	YMP	TBD	Emplacement drift maximum temperature
3.7.G.6	YMP	TBD	Access drift maximum temperature
3.7.1.2.F.1	YMP	TBD	All of emplaced containers shall remain intact
3.7.1.2.F.2	YMP	TBD	Handling and lifting fixtures on all of the containers

ENGINEERED BARRIER DESIGN REQUIREMENTS DOCUMENT

TBD LOG

DOCUMENT/REVISION NUMBER 0

SECTION OR PARAGRAPH	DETERMINATION ORGANIZATION	DETERMINATION SCHEDULE DATE	BRIEF DESCRIPTION
Figure 1-1	YMP	TBD	Notional Layout of Engineered Barrier Segment
Figure 3-6	YMP	TBD	Drift emplacement concept
3.1.3	YMP	TBD	Evaluate System Performance function
3.2.1.6.B	YMP	TBD	Reasonable expectation of cumulative releases
3.2.3.3.A.5	YMP	TBD	Maximum surface gamma dose rate
3.2.3.3.A.5	YMP	TBD	Maximum surface neutron dose rate
3.2.3.3.A.8	YMP	TBD	Emplacement concept
3.2.3.3.A.8.d	YMP	TBD	Design limit temperatures for waste forms
3.2.3.3.A.12	YMP	TBD	Construction materials used underground
3.2.3.3.A.14.b	YMP	TBD	Underground facility configuration
3.2.3.3.A.15.b	YMP	TBD	Blast induced permeability damage
3.2.3.3.A.15.c	YMP	TBD	Limit excavation overbreak
3.2.3.3.A.16.b	YMP	TBD	Materials and placement methods for seals
3.2.3.3.B.4	YMP	TBD	Shock levels
3.2.3.3.B.4	YMP	TBD	Vibration levels
3.2.3.3.B.7	YMP	TBD	Comparative evaluation of seal alternatives
3.2.3.4.A.3	YMP	TBD	Canister unique alphanumeric identifier
3.2.3.4.A.4	YMP	TBD	Estimated inventory of radionuclides

ENGINEERED BARRIER DESIGN REQUIREMENTS DOCUMENT

TBD LOG

DOCUMENT/REVISION NUMBER 0

SECTION OR PARAGRAPH	DETERMINATION ORGANIZATION	DETERMINATION SCHEDULE DATE	BRIEF DESCRIPTION
3.2.3.4.B	YMP	TBD	Nonstandard canisterized HLW
3.2.3.4.C.1.g	YMP	TBD	SNF weight limit
3.2.3.4.C.4	YMP	TBD	Estimated inventory of radionuclides
3.2.3.4.C.5	YMP	TBD	Dose rate at shipment
3.2.3.4.E	YMP	TBD	Nonstandard SNF
3.2.3.5	YMP	TBD	Engineered barrier interfaces with transportation
3.2.4.5	YMP	TBD	Allocation of shielding to the waste package
3.2.4.6.A	YMP	TBD	Design basis events
3.2.5.1.2.B.1	YMP	TBD	Reliability of waste package
3.2.5.1.2.B.1.a	YMP	TBD	Reliability of waste form
3.2.5.1.2.B.1.b	YMP	TBD	Reliability of waste container
3.2.5.1.2.B.1.c	YMP	TBD	Reliability of internal structure
3.2.5.1.2.B.1.d	YMP	TBD	Reliability of packing, shielding, and absorbing materials
3.2.5.1.2.B.2	YMP	TBD	Reliability of backfill
3.2.5.1.2.B.3	YMP	TBD	Reliability of emplacement hardware
3.2.5.4	YMP	TBD	Maintainable preclosure service life of Engineered Barrier Segment
3.3.3.B	YMP	TBD	Information on label for equipment and parts
3.3.9.A	YMP	TBD	Property to be furnished by U.S. Government

ENGINEERED BARRIER DESIGN REQUIREMENTS DOCUMENT

TBD LOG

DOCUMENT/REVISION NUMBER 0

SECTION OR PARAGRAPH	DETERMINATION ORGANIZATION	DETERMINATION SCHEDULE DATE	BRIEF DESCRIPTION
3.3.9.B	YMP	TBD	Requirements for care of Government furnished property
3.4.2	YMP	TBD	OCRWM standard for drawings
3.4.4	YMP	TBD	Test and Evaluation program
3.6.1.A	YMP	TBD	Safety Analysis Report
3.6.1.A	YMP	TBD	License
3.7.C	YMP	TBD	Substantially complete containment
3.7.C	YMP	TBD	Period when conditions are dominated by fission product decay
3.7.C	YMP	TBD	Small fractional releases
3.7.D	YMP	TBD	Substantially complete containment
3.7.I	YMP	TBD	Rock induced loading
3.7.1.F	YMP	TBD	Waste package information label
3.7.1.I	YMP	TBD	Substantially complete containment
3.7.1.I	YMP	TBD	Period of containment
3.7.1.J.1	YMP	TBD	External dimensions of waste package
3.7.1.J.1	YMP	TBD	External dimension tolerance for waste package
3.7.1.J.2	YMP	TBD	Weight limit for waste package
3.7.1.J.3	YMP	TBD	Surface finish
3.7.1.1.F	YMP	TBD	Drop height capability
3.7.1.1.G	YMP	TBD	Seismic loads

ENGINEERED BARRIER DESIGN REQUIREMENTS DOCUMENT

TBD LOG

DOCUMENT/REVISION NUMBER 0

SECTION OR PARAGRAPH	DETERMINATION ORGANIZATION	DETERMINATION SCHEDULE DATE	BRIEF DESCRIPTION
3.7.1.2.A	YMP	TBD	Routine handling and transportation loads
3.7.1.2.B	YMP	TBD	Substantially complete containment
3.7.1.2.C	YMP	TBD	Amount container contributes to release of radionuclides
3.7.1.2.D	YMP	TBD	Amount of liquid allowed to contact the waste form
3.7.1.2.E	YMP	TBD	Information on label
3.7.1.2.H.2	YMP	TBD	Waste container maximum weight
3.7.1.2.H.3	YMP	TBD	Waste container envelope
3.7.1.2.H.4	YMP	TBD	Acceptance criteria for weld flaws on waste container
3.7.1.2.J	YMP	TBD	Specifications for inert gas
3.7.1.2.J	YMP	TBD	Inspection and test requirements
3.7.1.3.A	YMP	TBD	Nuclear criticality
3.7.1.3.D	YMP	TBD	Internal structure shall be capable of withstanding loads
3.7.1.4	YMP	TBD	Allocations to any containers, packing, shielding and other absorbent materials
3.7.2.B	YMP	TBD	Backfill permeability
3.7.3	YMP	TBD	Emplacement hardware

Status of the Engineered Barrier Design Requirements Document (EBDRD)

ICN-1 provides this statement on the status of the EBDRD in partial response to CARs YM-94-002 and YM-94-003. In addition, CAR YM-94-002 requires that rationale be developed for the derived requirements in the EBDRD and CAR YM-94-003 requires that any unqualified inputs be identified in the EBDRD. The rationale for derived requirements and the identification of unqualified inputs will be included in the Requirements Backup Sheets and in Section 2, respectively, when the EBDRD is revised (Rev. 1) in 1995. Potential users of the current EBDRD (Rev. 0) need to be aware that: (1) developing the rationale for the derived requirements may require corrections to the derived requirements and (2) some inputs may be identified as unqualified inputs.

1. SCOPE

1.1 IDENTIFICATION

This Engineered Barrier Design Requirements Document (EB-DRD) describes the functions to be performed by and establishes the requirements for the Engineered Barrier Segment. The Engineered Barrier Segment is one of the segments of the Mined Geologic Disposal System (MGDS) for the permanent disposal of spent nuclear fuel (SNF), commercial high-level radioactive waste (CHLW), and defense high-level radioactive waste (DHLW). Both CHLW and DHLW will be referred to in this requirements document (RD) as HLW. The primary function of the Engineered Barrier Segment is to isolate waste, first by containing waste within the waste package and then, together with the geologic setting, isolating high-level waste from the accessible environment. The requirements for the Engineered Barrier Segment are allocated from the requirements contained in the Mined Geologic Disposal System Requirements Document (MGDS-RD). The major components of the Engineered Barrier Segment consist of the waste packages, the underground facility, any backfill placed in emplacement drifts, and emplacement hardware used to support and protect the emplaced waste packages. The underground facility portion of the Engineered Barrier Segment has been identified as an interface with the Repository Segment.

The development and control of the EB-DRD is quality-affecting work and is subject to the Quality Assurance Requirements and Description (QARD) Document, Revision 0, 12-11-92 and Baseline Management Plan controls. The EB-DRD has been prepared and managed in accordance with the "Technical Document Preparation Plan for the Preparation of MGDS Design Requirements Documents", Revision 0, 9-17-92.

This RD will be updated during and after Advanced Conceptual Design (ACD) to incorporate derived requirements.

1.2 PURPOSE OF DOCUMENT

The purpose of this document is to flow down the requirements from the MGDS-RD, expand and interpret those requirements, and define the segment/component level requirements for the design of the Engineered Barrier Segment. This document also presents an overall description of the Engineered Barrier Segment, its functions, its components, and the requirements allocated to its components. In addition, the interface requirements of the Engineered Barrier Segment to geologic setting, Site Segment, Repository Segment, waste acceptance (WA) and transportation are defined. These interface requirements are identified and allocated to the Engineered Barrier Segment in the MGDS-RD.

1.3 SYSTEM OVERVIEW

1.3.1 MINED GEOLOGIC DISPOSAL SYSTEM BACKGROUND

As directed by Congress, the U.S. Department of Energy (DOE) is conducting a program for siting the nation's first geologic repository for SNF and HLW. The process and the schedule for this program were specified initially in the Nuclear Waste Policy Act of 1982 (NWPA). One of the sites included in that program was Yucca Mountain, Nevada. In

May 1986, the DOE recommended, and the President approved, the Yucca Mountain site as one of the three candidate sites for detailed study. In the Nuclear Waste Policy Amendments Act of 1987 (NWPAA), the Yucca Mountain site was designated by Congress for characterization as the single candidate site for a geologic repository.

The NWPA defines SNF as the fuel that has been withdrawn from a nuclear reactor following irradiation, the constituent elements of which have not been separated by reprocessing. As used in this document, SNF is defined to include the nonfuel components and hardware as identified in 10 CFR 961. HLW is defined as: (1) the highly radioactive material which results from reprocessing SNF, including liquid waste that contains fission products in sufficient concentrations, and (2) other highly radioactive material that has been determined by the Nuclear Regulatory Commission (NRC), consistent with the law, to require permanent isolation [NWPA Sec 2 (23) and (12)]. However, the Civilian Radioactive Waste Management System (CRWMS) will accept only SNF and solidified HLW. Both waste forms will be referred to in this document as waste. In a 1985 Presidential Memorandum, the DOE was instructed to proceed with plans and actions to dispose of defense waste in the MGDS.

This EB-DRD has been written to support the design of a repository to facilitate the potential license application should DOE determine that Yucca Mountain, Nevada is a suitable repository site. Technical efforts are inherently and unavoidably site-specific. It is fully recognized that Yucca Mountain may be found to be unsuitable for a repository, or the Office of Civilian Radioactive Waste Management (OCRWM) could be directed to another site. If that is the case, this document will become invalid and a new document will be written to support the revision of the design for whatever alternative site is specified for the repository by programmatic or policy decisions.

1.3.2 MINED GEOLOGIC DISPOSAL SYSTEM FUNCTIONS

The following list represents the top-level functions of the MGDS. These functions are further decomposed in Section 3.1 specifically for the Engineered Barrier Segment.

A. Characterize Site
B. Operate MGDS (includes waste retrieval)
C. Isolate Waste
D. Evaluate System Performance
E. Close Geologic Repository

1.3.3 SYSTEM CONCEPT

Waste will be emplaced in the MGDS, in an isolated geologic medium with no foreseeable intent of recovery, although the option to retrieve emplaced wastes will be preserved until the NRC amends the repository license for permanent closure.

The repository surface facility receives radioactive wastes in shipping casks by truck or rail. As currently planned, the waste will be removed from the shipping casks and placed into waste packages which will then be transported to the underground emplacement location. An alternate concept under study is to use a multipurpose canister for both shipping and waste emplacement. Sufficient lag storage of waste and waste packages will be provided. Surface facilities will also house support and performance confirmation

functions as well as provide a place at one of the two portals to store excavated rock. The repository functions for the MGDS include the construction and preparation of emplacement openings; all utilities; ventilation; administrative and logistics services; fire protection; performance confirmation monitoring; machinery for receiving, packaging, transferring, emplacing, and, if required, retrieving waste packages; and systems for preparing and emplacing backfill materials and seals. The support functions performed at the MGDS include administration, safety, security, maintenance, personnel support, health physics, and medical aid station.

1.3.4 ENGINEERED BARRIER SEGMENT DESCRIPTION

The Engineered Barrier Segment consists of the waste packages, the underground facility, any backfill placed in emplacement drifts, and emplacement hardware used to support the emplaced waste packages. The components of the waste package are the waste form and any containers, shielding, packing, and other absorbent materials immediately surrounding an individual waste container. It may also include ancillary devices such as shielding closures, support plates, borehole liners, and dollies.

The waste packages will be designed to accommodate SNF and HLW waste forms. Waste forms will be placed in the waste package container and sealed. The design may include packing and other absorbent materials, if necessary, to slow the release of radionuclides during the isolation period as containment within the waste package is lost due to corrosion, damage, or other long term degradation of the waste package. Shielding, although not currently required for the Engineered Barrier Segment, will be inherent to some extent in the waste package design. Nuclear criticality will be prevented by such methods as maintaining adequate spacing between the waste forms in the waste package or providing neutron absorbers.

The Repository Segment will provide space for waste emplacement in vertical or horizontal boreholes or in the drifts, depending on the technologies now under study. The backfill material (if used in emplacement drifts) and the emplacement hardware will provide additional barriers to slow the release of radionuclides to the geologic setting. Backfill (if used) may also be placed around the waste package to provide an umbrella to prevent water (although none is anticipated) from contacting the waste package. A notional layout of the Engineered Barrier Segment is provided in Figure 1-1 for three of the possible waste emplacement concepts: vertical and horizontal borehole and in-drift emplacement.

1.3.5 ENGINEERED BARRIER SEGMENT MISSION

The mission of the Engineered Barrier Segment is to contain safely and, together with the geologic setting, isolate SNF and HLW from the accessible environment. Furthermore, the Engineered Barrier Segment will support the retrieval function.

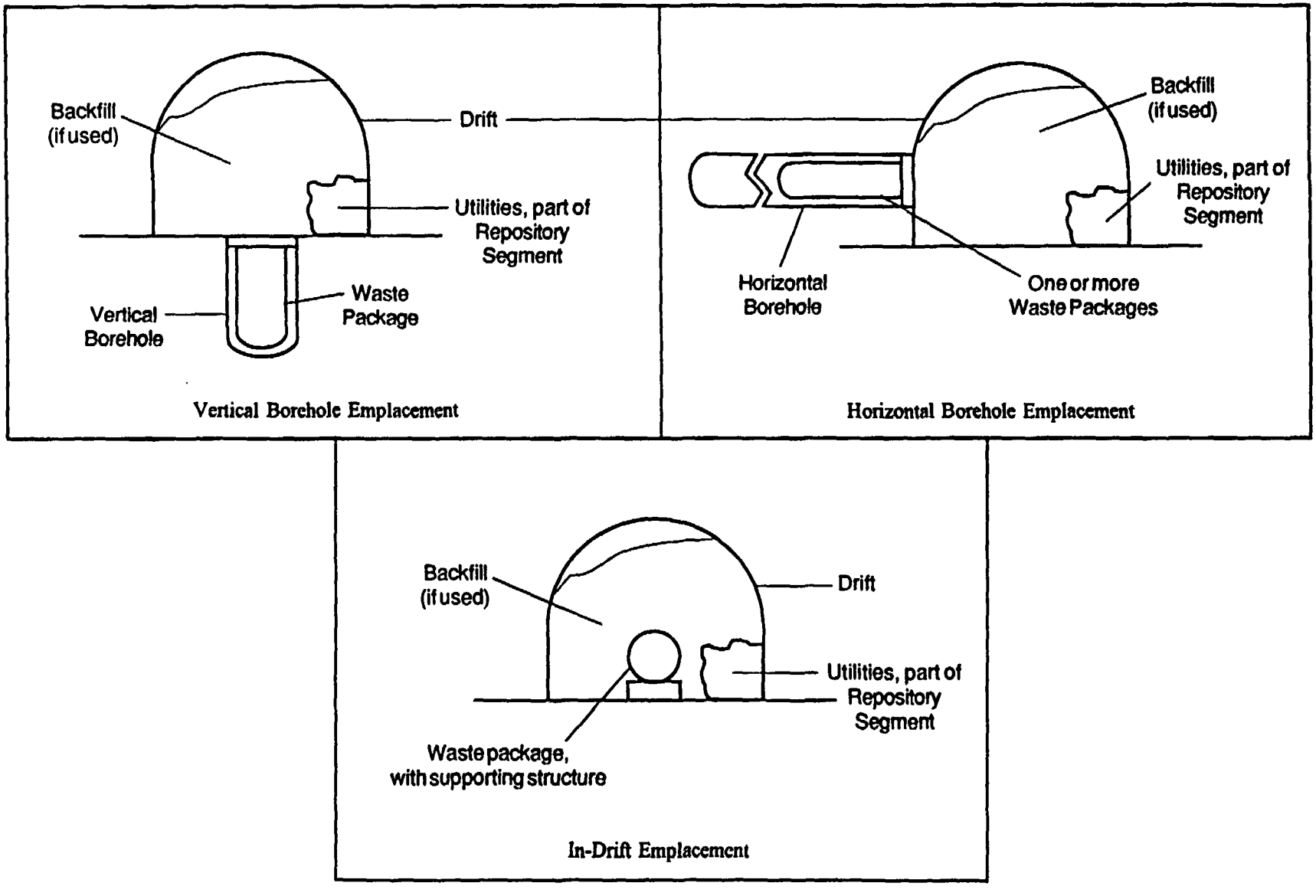

BARR-SEG.101/7-6-93

Figure 1-1 Notional Layout of the Engineered Barrier Segment - Vertical and Horizontal Borehole and In-Drift Waste Emplacement Concepts (TBD)

1.3.6 ENGINEERED BARRIER SEGMENT PERIOD OF PERFORMANCE

The time period of Engineered Barrier Segment performance is from the initial receipt of waste to the MGDS through at least 10,000 years following permanent closure of the MGDS facility. The regulations in 10 CFR 60.113 specify post closure performance requirements during the containment period of 300 to 1,000 years and do not place an upper limit on the period of performance for release rates as clarified in NRC staff position 60-001 (7-27-90).

1.4 DOCUMENT ORGANIZATION AND DESCRIPTION

1.4.1 REQUIREMENTS DOCUMENTS HIERARCHY

The OCRWM Document Hierarchy, shown in Figure 1-2, illustrates the connectivity between this project document and the other project and program level documents. This set of documents establishes the requirements to be addressed by the design of the system elements, including the MGDS and its segments.

Many of the technical requirements for the MGDS are documented in a variety of federal regulations, DOE directives and orders, and other government documents. The MGDS-RD establishes the technical requirements for the MGDS by summarizing the source documentation which must be addressed and by deriving requirements not covered in the regulations, but necessary to accomplish the MGDS mission. The MGDS-RD also defines the MGDS by identifying functions for each element, defining the system architecture of the MGDS, and by allocating the functions and requirements to the architectural elements of the system, including the Engineered Barrier Segment. In doing so, the MGDS-RD establishes the basis for requirements to be addressed and expanded in this document.

The MGDS-RD defines the requirements to be satisfied by the MGDS, the physical system boundaries and the interfaces. The relationship of the MGDS to the other elements of the waste management system is shown in Figure 1-3. To satisfy the functional requirement to dispose of waste, the MGDS is divided into three major segments: the Site Segment, the Repository Segment, and the Engineered Barrier Segment.

1.4.2 DOCUMENT ORGANIZATION

This EB-DRD is organized as follows:

A. **Section 1: Scope.** This section presents the MGDS overview including the Engineered Barrier Segment mission and system concept.

B. **Section 2: Applicable Documents.** This section identifies documents which contain various requirements applicable to the Engineered Barrier Segment. These documents are listed in this section to provide requirement traceability and are not to be incorporated as requirements themselves.

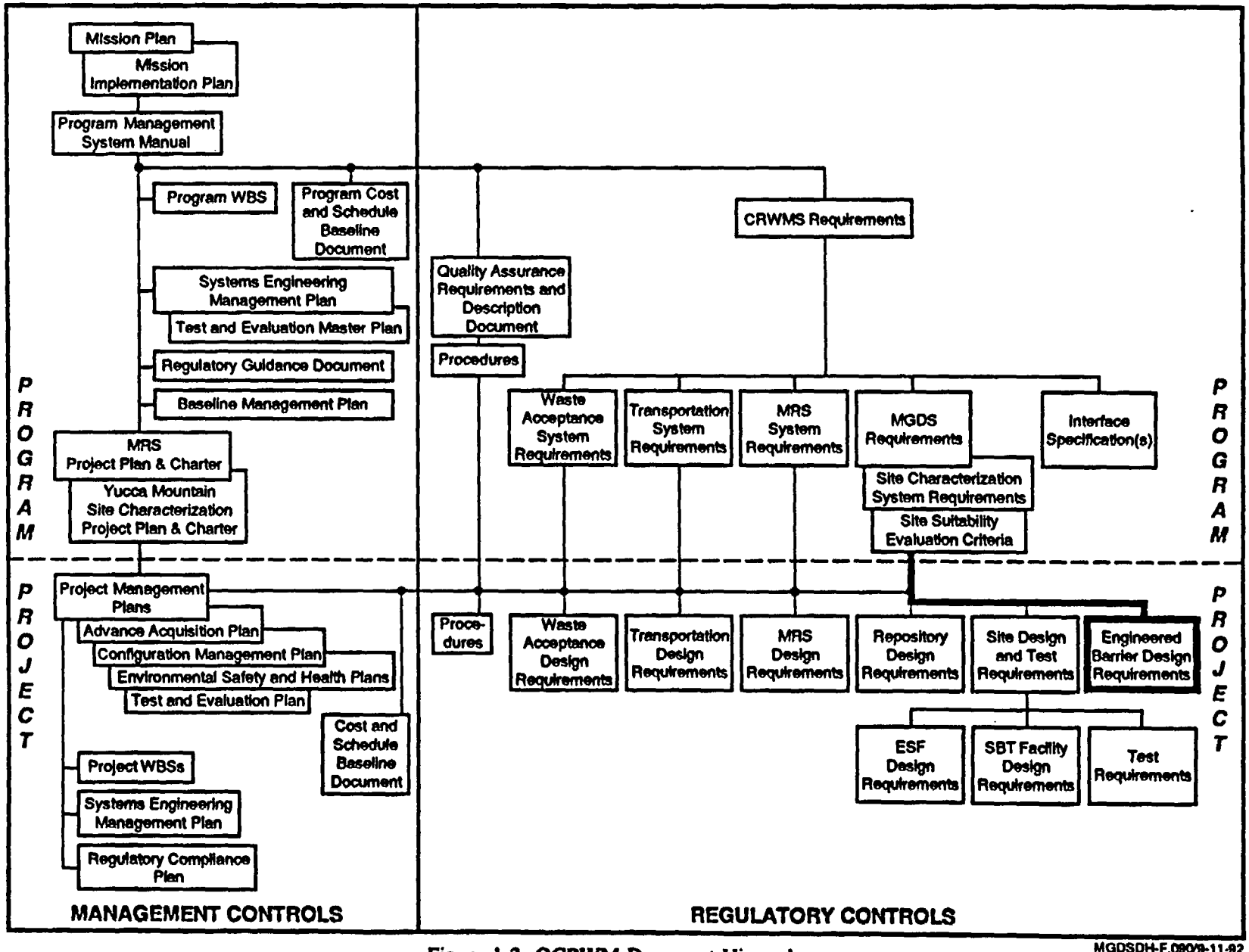

Figure 1-2 OCRWM Document Hierarchy

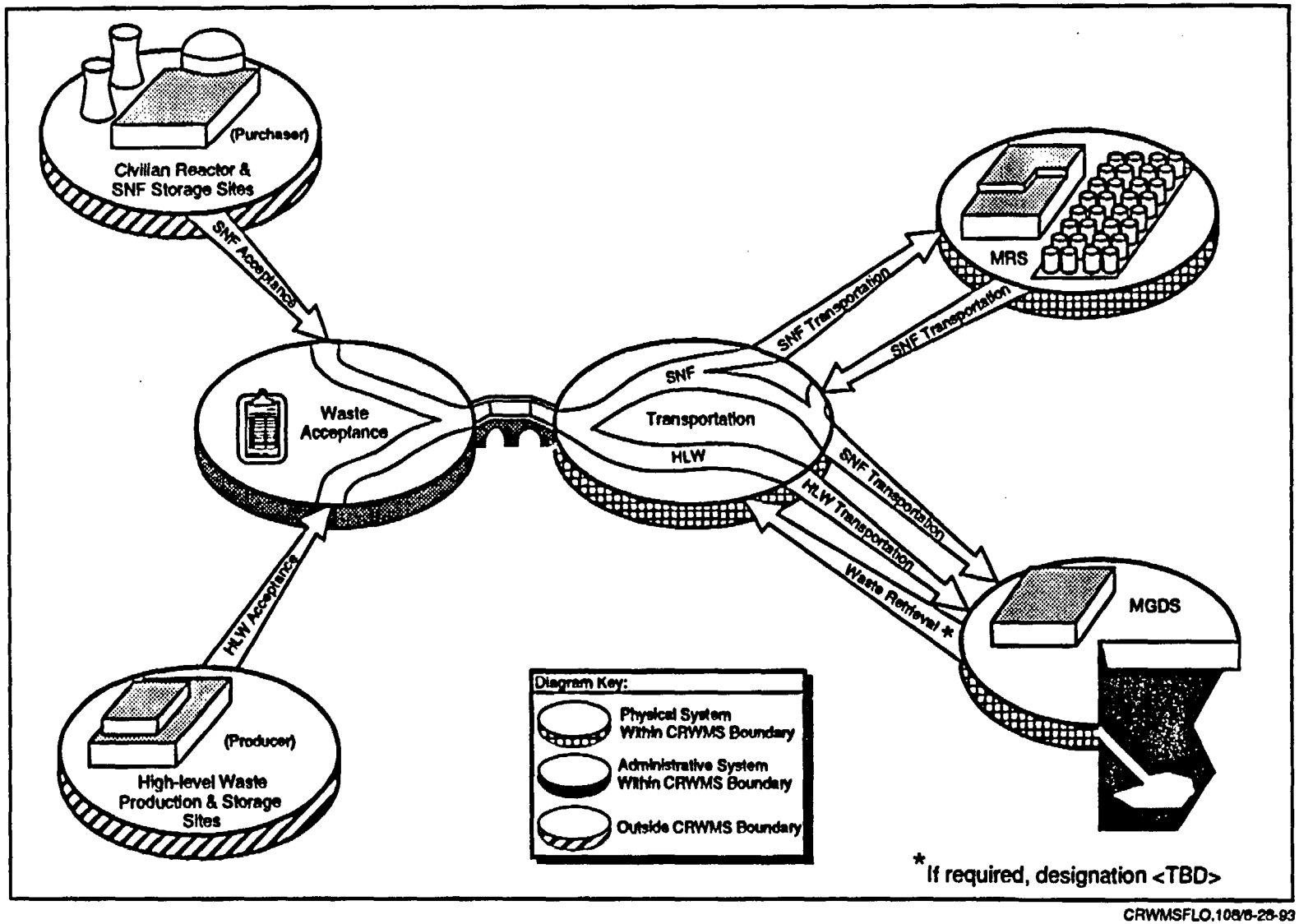

CRWMSFLO.108/6-28-93

Figure 1-3 Civilian Radioactive Waste Management System

C. **Section 3: Requirements.** This section contains all the requirements for the Engineered Barrier Segment and begins with the Engineered Barrier Segment definition, followed by functional requirements and performance criteria. Design and construction criteria are also presented. Specialty engineering and logistics requirements are addressed along with the requirements for documentation, personnel, and training. Qualification requirements, including requirements for quality assurance (QA), are also provided.

D. **Section 4: Conformance Verification.** This section addresses conformance verification and includes a cross reference matrix to define how each requirement of Section 3 is to be verified.

E. **Section 5: Preparation for Operations.** This section contains requirements for preparation of the system for acceptance and operations.

F. **Section 6: Notes.** This section contains material which is explanatory in nature and which is nonbinding on Engineered Barrier Segment development.

1.4.3 DESCRIPTION

The purpose of the EB-DRD is to establish a requirements basis for the Engineered Barrier Segment. As indicated in the outline in Section 1.4.2, Section 3 of this document provides the requirements for the Engineered Barrier Segment. The requirements allocated to the EB-DRD by the MGDS-RD are addressed in expanded form. Also included are requirements which have been derived to meet the Engineered Barrier Segment mission. Section 3.1 describes the system in terms of functions and physical segments and the relationship between the two. Sections 3.2 to 3.6 address requirements important to the design of the Engineered Barrier Segment in terms of interfaces, specialty engineering disciplines (e.g., safety, environmental, and security), construction standards, and logistics. Section 3.7 contains requirements associated with major components of the Engineered Barrier Segment.

The statement of a requirement is followed by references to both the MGDS-RD and the original source document (e.g., [MGDS-RD 3.2.5.1.3] [10 CFR 60.131(b)(3)]). When no source document is identified, "[Derived]" will follow the requirement and the approved EB-DRD is the source. The sources are also provided in Table 6-1.

A fundamental approach of the EB-DRD is to reword the requirements as necessary into statements of clear engineering direction which are verifiable and do not depend upon the context in which they were originally presented. In other words, they are stated in such a manner that the success or failure of the design and development process in achieving the required capability can be measured and verified by some engineering technique (analysis, examination, test, or demonstration). At times, this may involve interpreting the requirements and establishing measures of performance for the requirements. As the MGDS project evolves, some requirements can only be developed on an iterative basis. Sites have to be approved, studies and analyses have to be completed, decisions must be made, and issues have to be resolved with the NRC. As a result, some requirements in early versions of RDs contain specifics that are still to be determined and are labeled "TBD" (to be determined). In other instances, engineering judgment may permit a tentative statement of values to be used for initial design work. In these instances, the

requirement is labeled "TBV" (to be verified) or "TBR" (to be resolved). Requirements obtained from unqualified sources are also annotated with "TBR" to indicate they must be qualified. These requirements are being coordinated with the MGDS design organization to provide agreement with the conceptual design. Recognizing the risk associated with developing a design based on uncertainties associated with these requirements, this document includes requirements or cautions to develop a design that can be modified to address potential changes.

2. APPLICABLE DOCUMENTS

Sections 2.1 through 2.4 identify documents which have been referenced as sources of requirements for the EB-DRD. The documents are listed to provide traceability to the source documents and are not to be incorporated as requirements themselves.

The Engineered Barrier Segment design shall comply with the latest version of all Federal Laws and Documents, State Laws and Standards, and Local Ordinances. For all Non-Government Documents, the issue in effect on the date of approval of the EB-DRD forms a part of the requirements.

Omission of any applicable documents from this section shall not relieve the designer of the responsibility to meet those omitted requirements.

Section 2.5 identifies reference materials that have not been used as sources of requirements, but have been provided here for reference.

2.1 FEDERAL LAWS AND DOCUMENTS

2.1.1 LAW, STATUTES, U.S. CODES, AND TREATIES

Identifier	Title or Description
A. 29 USC 651 et seq.	Occupational Safety and Health Act
B. 42 USC 10101 et seq.	NWPA, P.L. 97-425 and NWPAA, P.L. 100-203

2.1.2 CODE OF FEDERAL REGULATIONS AND EXECUTIVE ORDERS

Identifier	Title or Description
A. 10 CFR 20	Standards for Protection Against Radiation
B. 10 CFR 60	Disposal of High-Level Radioactive Wastes in Geologic Repositories
C. 10 CFR 960	General Guidelines for the Recommendation of Sites for Nuclear Waste Repositories
D. 10 CFR 961	Standard Contract for Disposal of Spent Nuclear Fuel and/or High-Level Radioactive Waste
E. 29 CFR 1910	Occupational Safety and Health Standards
F. 30 CFR 57	Safety and Health Standards - Underground Metal and Non-Metal Mines

G. 40 CFR 191	*Environmental Radiation Protection Standards for Management and Disposal of Spent Nuclear Fuel, High-Level and Transuranic Radioactive Wastes* **(TBR-pending repromulgation of Part B)**
H. Presidential Memo	Dispose of Defense Waste in a Commercial Repository (April 30, 1985)

2.1.3 OTHER DOCUMENTS, ORDERS, AND DIRECTIVES

Identifier	Title or Description
A. DOE Order 4330.4A	Real Property Maintenance Management
B. DOE Order 4700.1	Project Management System
C. DOE Order 5480.4*[1]	Environmental Protection, Safety, and Health Protection Standards
D. DOE Order 6430.1A*	General Design Criteria
E. DOE/RW-0198	Site Characterization Plan: Yucca Mountain Site, Nevada Research and Development Area, Nevada (SCP)
F. DOE/RW-0333P	OCRWM Quality Assurance Requirements and Description (QARD) Document, Rev. 0, 12-18-92
G. MOA RW/NS	Memorandum of Agreement (MOA) on Nuclear Safety Requirements, dated April 16, 1992

2.2 STATE LAWS AND TRIBAL LAWS

None are applicable to this document.

2.3 LOCAL ORDINANCES

None are applicable to this document.

2.4 NONGOVERNMENT DOCUMENTS

2.4.1 NATIONAL AND INTERNATIONAL STANDARDS

None are applicable to this document.

[1] The asterisked (*) Orders apply only to the extent they do not conflict with NRC direction.

2.4.2 OTHER PUBLICATIONS

Identifier	Title or Description
A. UCRL 15673	Human Factors Design Guidelines for Maintainability of Department of Energy Nuclear Facilities (University of California Radiation Laboratory)
B. DOE/RW-0406P	CRWMS System Requirements Document (CRD) Rev. 0
C. DOE/RW-0404P	MGDS System Requirements Document (MGDS-RD) (Rev. 0)

2.5 OTHER REFERENCES

This section identifies documents that have not been used as sources of requirements, but have been considered in developing the EB-DRD and are provided here for reference.

Identifier	Title or Description
A. DOE/RW-0334P	Physical Systems Requirements - Overall System, Rev. 0, January 1992
B. DOE/RW-DRAFT	Physical Systems Requirements - Dispose of Waste, (Draft, June 21, 1991)
C. DOE/RW-DRAFT	Physical System Requirements - Exploratory Studies Facility, (Draft, July 1991)
D. DOE/RW-0264	Waste Management System Requirements Document, Volume I, General System Requirements, Rev. 2, February 1992
E. DOE/RW-0268	Waste Management System Requirements Document, Volume IV, MGDS, Rev. 2, February 1992
F. DOE/RW-0270P	Waste Management System Description Document, Rev. 1, February 1992
G. DOE/RW-0315P	Waste Acceptance Systems Requirements Document (WA-SRD), Rev. 2, January 1993
H. NRC Staff Position 60-001	Clarification of the 300-1000 Years Period for Substantially Complete Containment of High-Level Wastes Within the Waste Packages Under 10 CFR 60.113(a)(1)(ii)(A), July 27, 1990

3. REQUIREMENTS

This section specifies the requirements which are mandatory for the design and construction of the Engineered Barrier Segment. Section 3.1 defines the system, while the balance of the subsections state the requirements. Those performance requirements which are specifically assigned to architectural components designed to accomplish the Engineered Barrier Segment functions, are allocated to those components in Section 3.7. This EB-DRD will specify design requirements for each component as well as the interfaces particular to that component.

3.1 SYSTEM DEFINITION

This section defines the Engineered Barrier Segment by identifying and defining the functions the Engineered Barrier Segment will perform, providing information on the interrelationships of the functions, defining the top-level architecture of the Engineered Barrier Segment, and allocating the identified functions to the architecture. It also describes the major considerations and assumptions used in specifying the requirements contained in subsequent sections.

3.1.1 MINED GEOLOGIC DISPOSAL SYSTEM FUNCTIONS

The top-level function of the MGDS, Dispose of Waste, is shown in context with the other CRWMS functions in the "Manage Waste Disposal Function Flow" shown in Figure 3-1. The Dispose of Waste function includes, as subfunctions: Characterize Site, Operate MGDS (including retrieval, if necessary), Isolate Waste, Evaluate System Performance, and Close MGDS. These functions are depicted in the "Dispose of Waste" functional flow block diagram in Figure 3-2.

Dispose of Waste includes functions and activities required to emplace SNF and HLW in a geologic medium (while preserving an option for retrieval during the operational phase of the repository) and to isolate such wastes from the accessible environment. This includes the functions required to characterize the site to determine site suitability and support the process of designing and licensing the repository using the guidelines specified in 10 CFR 60 and 10 CFR 960.

The term "disposal" is defined as the emplacement in a repository of HLW, SNF, or other highly radioactive material with no foreseeable intent of recovery, whether or not such emplacement permits the recovery of such waste. This "disposal" isolates the radioactive wastes from the accessible environment. Isolation is accomplished by a "Disposal System" - any combination of engineered and natural barriers that isolate SNF or HLW after disposal.

Table 3-1 provides a list of Dispose of Waste subfunctions and identifies references to functional flow blocks in the MGDS-RD. The following sections define the major subfunctions of Dispose of Waste that pertain to the Engineered Barrier Segment.

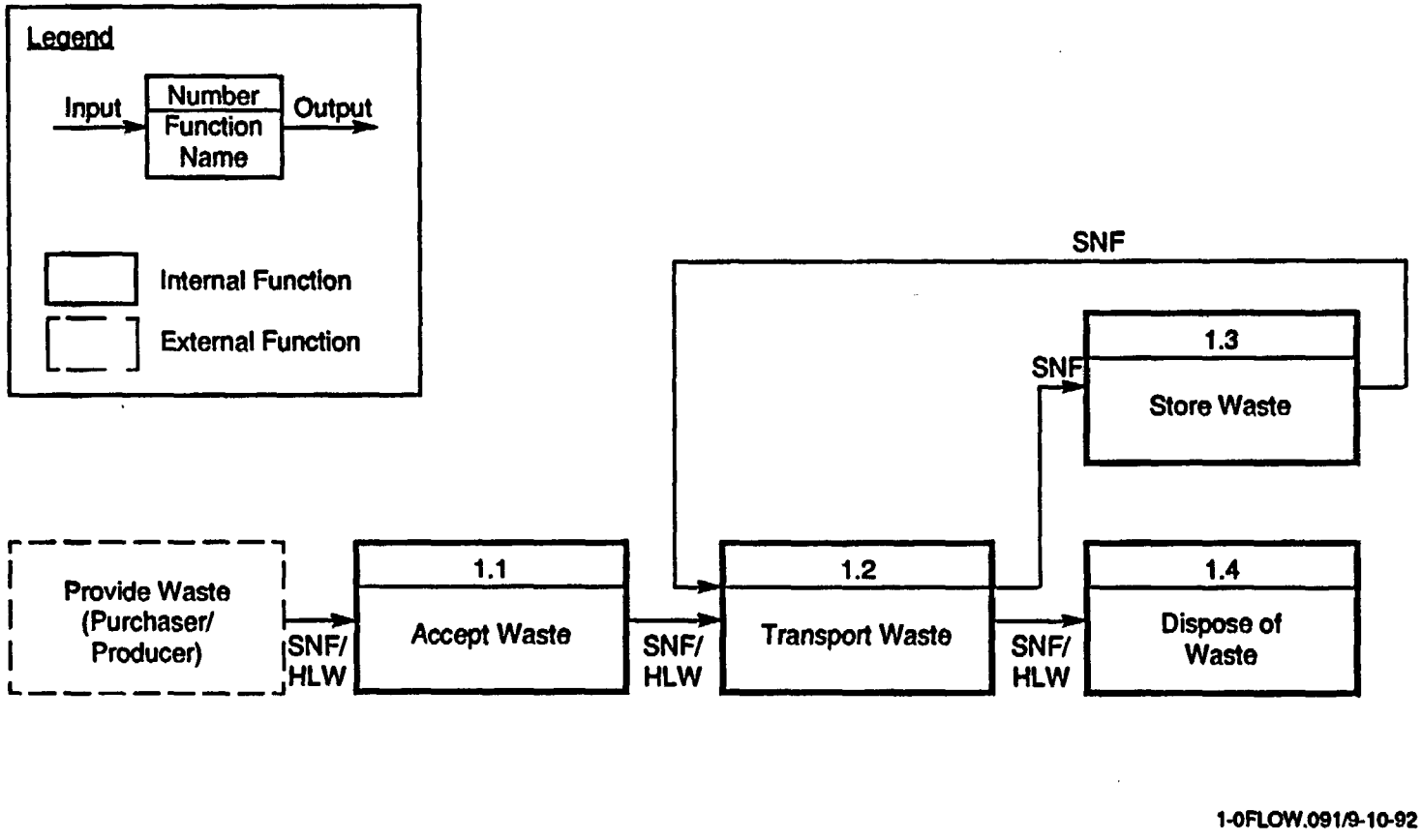

Figure 3-1 Manage Waste Disposal Functional Flow (1.0)

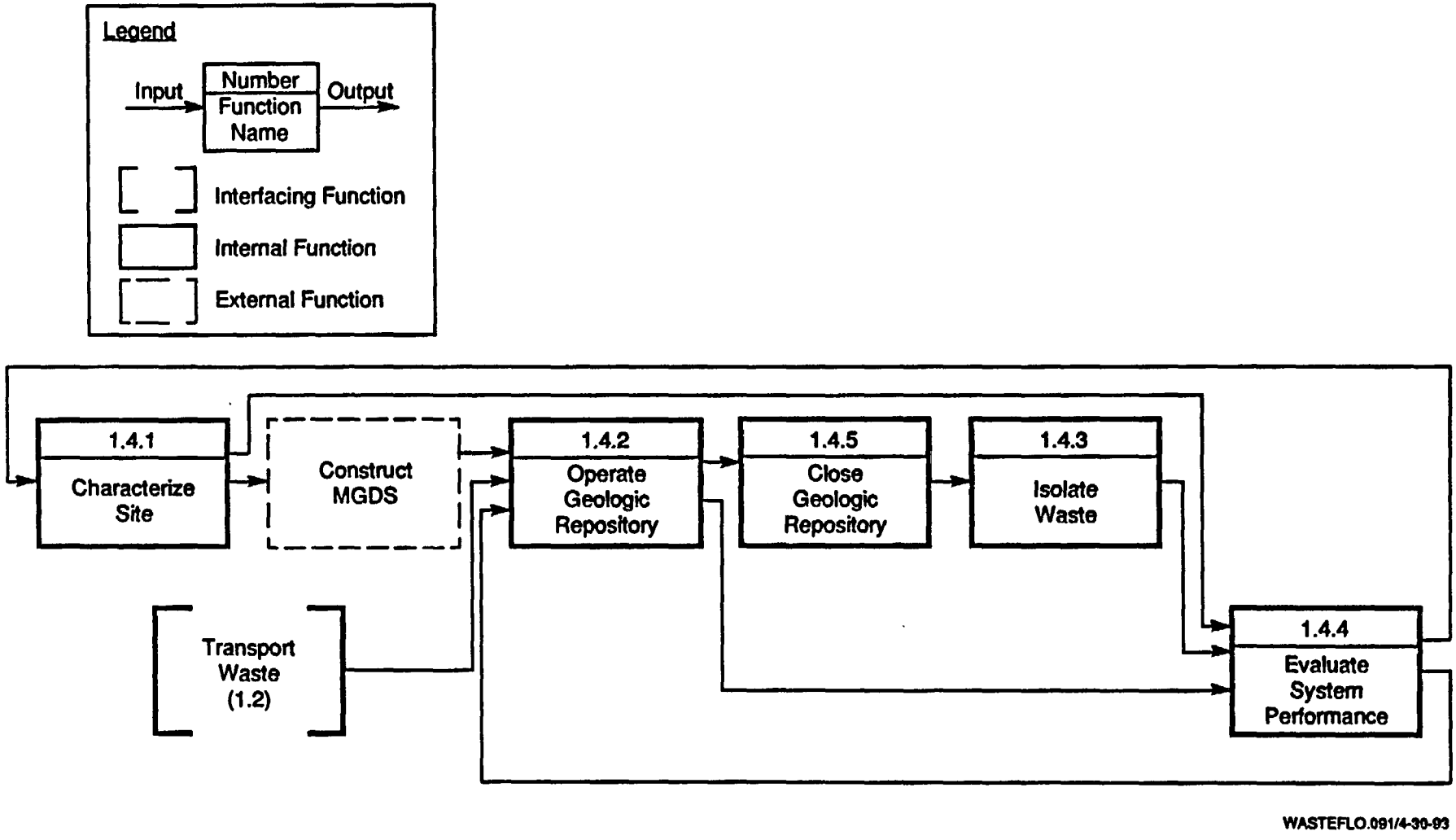

Note: Characterize Site is a function driven by the Nuclear Waste Policy Act as amended

Figure 3-2 Dispose of Waste Functional Flow (1.4)

Table 3-1 MGDS Functions Allocated to Segments

Function Title	MGDS Function Number	Site Segment	Repository Segment	Engineered Barrier Segment
Dispose of Waste	1.4	X	X	X
Characterize Site	1.4.1	X		
Conduct Surface Investigations	1.4.1.1	X		
Conduct Subsurface Investigations	1.4.1.2	X		
Assess Data	1.4.1.3	X		
Close Exploratory Studies Facilities	1.4.1.4	X		
Operate MGDS	1.4.2		X	
Handle Waste (including retrieval if necessary)	1.4.2.1		X	
Support MGDS Operations	1.4.2.2		X	
Isolate Waste	1.4.3		X	X
Contain Waste	1.4.3.1			X
Limit Release of Radionuclides	1.4.3.2		X	X
Evaluate System Performance	1.4.4	X	X	X
Close MGDS	1.4.5		X	
Close Underground Openings	1.4.5.1		X	
Decommission Surface Facilities	1.4.5.2		X	
Establish Institutional Barriers	1.4.5.3		X	
Reclaim Site	1.4.5.4		X	

3.1.1.1 ISOLATE WASTE - FUNCTION 1.4.3

This function includes inhibiting the transport of radionuclides so that amounts and concentrations entering the accessible environment will be kept within prescribed limits. It includes initial containment of waste within a waste package; then, together with other parts of the Engineered Barrier Segment, retardation of the movement of any uncontained radionuclides from the Engineered Barrier Segment to the geologic setting; and finally, retardation and isolation of radionuclides through the geologic setting to the accessible environment.

3.1.1.2 EVALUATE SYSTEM PERFORMANCE - FUNCTION 1.4.4

This function includes estimating the ability of the repository system to comply with regulations governing its preclosure and postclosure performance objectives and its effects on the environment; using the estimates in updates to compliance documents and in support of the continuing development of the system; conducting the performance confirmation and environmental monitoring programs needed to supply data for the estimates; and planning for postclosure monitoring of the system. The function starts during site characterization and continues until permanent closure. Provision may be added for post-closure monitoring.

3.1.2 MINED GEOLOGIC DISPOSAL SYSTEM ARCHITECTURE DESCRIPTION

The MGDS architecture, shown in Figure 3-3, consists of the physical segments that will be developed to accomplish the five top-level MGDS "Dispose of Waste" functions listed in Section 3.1.1. These functions will be implemented by the Site Segment, the Repository Segment, and the Engineered Barrier Segment. The allocation of functions to the MGDS segments is shown in Table 3-1.

These site, repository, and engineered barrier segments will provide the primary facilities, hardware, software, and processes that comprise the physical means, together with the natural systems of the site, to accomplish all MGDS functions.

3.1.3 ENGINEERED BARRIER SEGMENT FUNCTIONS

As indicated in Table 3-1, the primary Engineered Barrier Segment functions for Dispose of Waste are Isolate Waste and Evaluate System Performance. The Isolate Waste function includes, as subfunctions, Contain Waste and Limit Release of Radionuclides. Of these, the subfunction Contain Waste is a function of the Engineered Barrier Segment and the subfunction Limit Release of Radionuclides is a shared function of the Engineered Barrier Segment and the geologic setting. The Evaluate System Performance function includes (TBD). In addition, the Engineered Barrier Segment design will support maintenance and retrieval functions, which will be performed by the Repository Segment.

3.1.4 ENGINEERED BARRIER SEGMENT ARCHITECTURE DESCRIPTION

The relationship between the Engineered Barrier Segment, Repository Segment and geologic setting is shown pictorially in Figure 3-4. This representation is based on the definitions of terms contained in 10 CFR 60 and included in the glossary of Section 6.1.

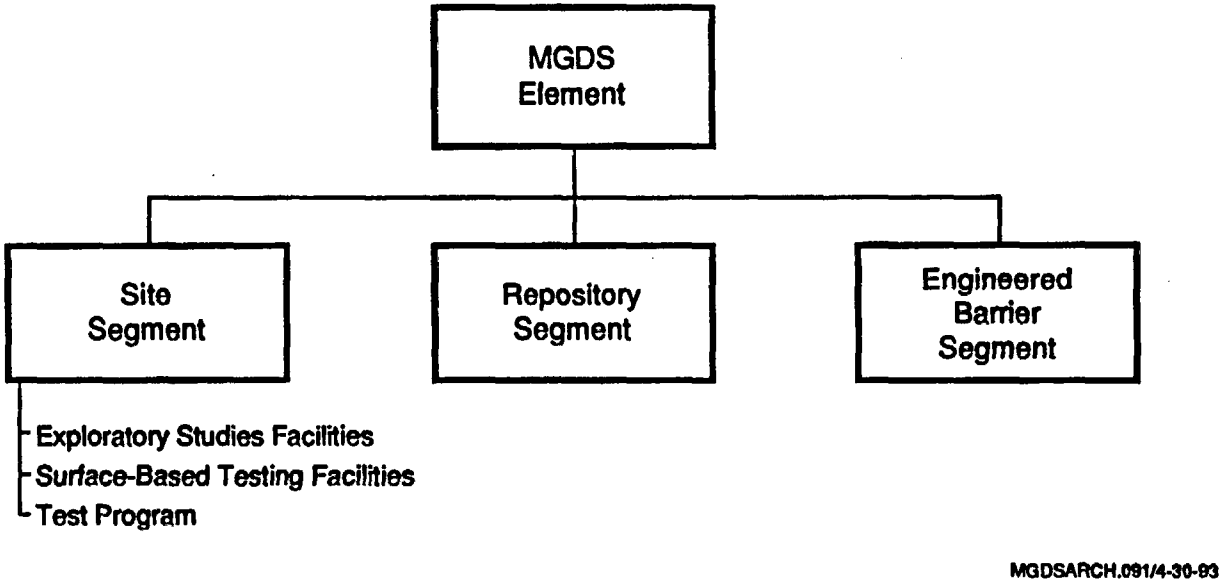

Figure 3-3 MGDS Architecture

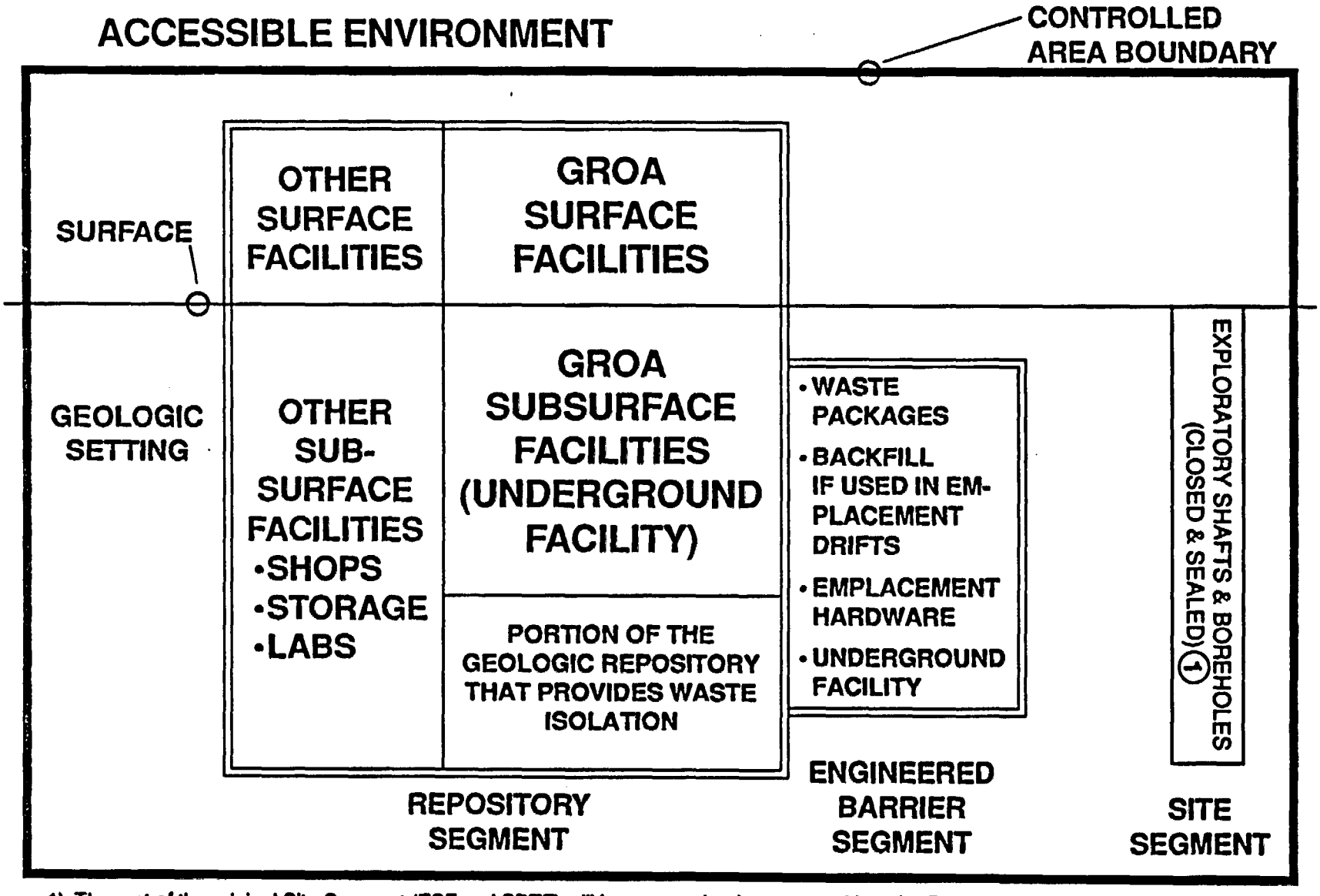

1) The rest of the original Site Segment (ESF and SBTF) will be removed or incorporated into the Respository Segment. The closed boreholes may penetrate the Underground Facility, but only subject to 10 CFR 60.15(c)(3).

MGDS-SEG.91/7-6-93

Figure 3-4 Description of MGDS Segments

As shown, the geologic repository is part of the controlled area and consists of both surface and subsurface areas. The Engineered Barrier Segment is defined as the waste packages, the underground facility, any backfill placed in emplacement drifts, and emplacement hardware to support and protect the emplaced waste packages. The waste package consists of the waste form and any containers, shielding, packing and other absorbent materials immediately surrounding an individual waste container. The Engineered Barrier Segment architecture is shown in Figure 3-5. The allocation of functions to the Engineered Barrier Segment components is shown in Table 3-2.

The Engineered Barrier Segment components will provide the primary facilities, hardware, processes, and procedures that comprise the physical means to accomplish all Engineered Barrier Segment functions.

Table 3-2 Engineered Barrier Segment Functions Allocated to Components (TBV)

Function Title	Engineered Barrier Segment Function Number	Waste Package	Under-ground Facility	Backfill (if used)	Emplacement Hardware
Isolate Waste	1.4.3	X	X	X	X
Contain Waste	1.4.3.1	X	X		X
Limit Degradation of Containment Barriers	1.4.3.1.1	X	X		X
Limit Egress of Radionuclides from Waste Package	1.4.3.1.2	X			
Limit Release of Radionuclides	1.4.3.2	X	X	X	
Limit Release of Radionuclides From Engineered Barrier Segment	1.4.3.2.1	X	X	X	
Limit Release of Radionuclides through Geologic Setting to Accessible Environment	1.4.3.2.2	*	*	*	*

*Function of the natural barrier only.

3.1.5 MAJOR CONSIDERATIONS AND ASSUMPTIONS

A. The MGDS design will be based on the technical requirements contained in the current issue of 40 CFR 191 until EPA has issued a new standard applicable to Yucca Mountain, as required by the Comprehensive National Energy Policy Act of 1992.

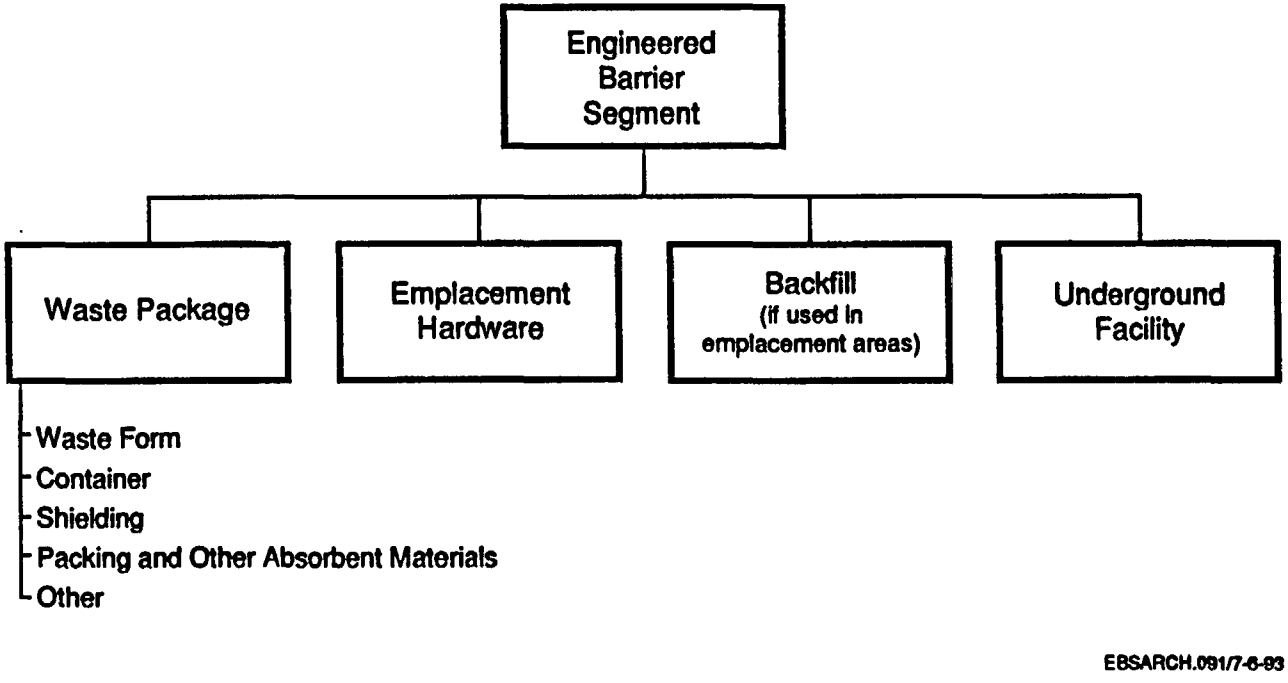

Figure 3-5 Engineered Barrier Segment Architecture

B. The assumption used in developing this EB-DRD is that the extent of blending (i.e., the mixing in waste packages of SNF and/or HLW of different thermal outputs) required is limited to that which can be accommodated by the WA process.

Thermal loading studies will determine the extent of blending that must occur. Limited blending can be accomplished at the MRS through the WA process. If significant blending is required, this could have a major impact on the MRS and/or MGDS design and operations, and will be the subject of system studies. If these studies show that changes in system design requirements are necessary, the RDs will be revised.

C. The MGDS requirements are driven by 10 CFR 60 which directs "the licensing of DOE to receive and possess source, special nuclear, and by-product material at a geologic repository operations area ...". As such, it does not provide all (i.e., the non-licensed) requirements needed for the MGDS (i.e., the system). As the Geologic Repository Operations Area (GROA) and other areas become better defined, MGDS requirements will be modified.

D. It is the position of DOE that the Federal Mine Safety and Health Act of 1977 (30 USC 801 et seq.) does not apply to the MGDS project because neither the geologic repository nor the Exploratory Studies Facility will be mines as defined in the Act. DOE's policy, however, is further stated in memorandum of understanding (MOU) with the Department of Labor, December 23, 1986. The MOU states that the DOE's "policy of compliance with Mine Safety and Health Administration (MSHA) standards as though repositories were commercial mines by taking necessary actions with the DOE contractors to assure prompt and effective correction of any deficiencies and to otherwise ensure general compliance with MSHA's mining health and safety requirements." This EB-DRD is based on these policies.

E. Shielding allocations between the Repository Segment and the Engineered Barrier Segment have not been determined. Currently, the waste package will not be required to be self-shielded. The assumption is that if the waste package is not self-shielded, the repository will provide the required shielding for radiological protection for all modes of facility operation. Shielding allocations will be determined by future trade studies.

F. The Engineered Barrier System, described in 10 CFR 60, overlaps with the GROA in that the underground facility is included in both. For the purposes of defining the MGDS, the underground facility, including emplacement drifts, and the associated requirements allocated to the EB-DRD by the MGDS-RD are identified as interfaces with the Repository Segment. The waste packages, any backfill placed in emplacement drifts, and emplacement hardware are part of the Engineered Barrier Segment.

3.2 CHARACTERISTICS

3.2.1 PERFORMANCE CHARACTERISTICS

Performance characteristics are the system's capabilities specified in terms of states, phases, or modes of operation in which the system can exist.

A. **Mission Requirement.** The design of the Engineered Barrier Segment, as part of the MGDS, shall provide for the disposal of SNF and civilian and defense HLW such that the public health and safety and the environment are protected.
[MGDS-RD 3.2.1.A][NWPA 111(a)(1); Presidential Memo 1985]

B. **Modes.** The Engineered Barrier Segment will operate in the following seven modes, related to the eight modes described for the operations of the MGDS. These modes are applicable after the NRC approval and licensing process.

1. Construction
2. Emplacement
3. Caretaker
4. Retrieval
5. Decommissioning and closure
6. Post-closure
7. Off-normal

The Engineered Barrier Segment can operate in more than one mode at a time. For example, the MGDS construction mode will begin after NRC issuance of the repository construction license. According to the current concept, only a portion of the emplacement locations will have been finished when the MGDS begins emplacement operations. The MGDS will continue to expand the underground facility in parallel with waste emplacement operations. This is a unique program aspect in that construction becomes part of the operation of the MGDS.

The requirements cited in the following subsections (3.2.1.1 - 3.2.1.7) are descriptive of the modes but may not be unique to the modes with which they are identified. For example, a performance confirmation program is required in all of the modes.

3.2.1.1 CONSTRUCTION MODE REQUIREMENTS

The MGDS construction mode will begin after NRC issuance of the repository construction license. According to the current concept, only a portion of the emplacement locations will have been finished when the MGDS begins emplacement operations.

During the early or developmental stages of construction, a program for in situ testing of such features as backfill, and the thermal interaction effects of the waste packages, backfill, rock, and groundwater shall be conducted. These tests will extend beyond the developmental stage, and other tests will be performed as appropriate.
[MGDS-RD 3.2.1.2.A][10 CFR 60.142(a)]

3.2.1.2 EMPLACEMENT MODE REQUIREMENTS

The emplacement mode includes all activities involved in receiving, preparing, transferring and emplacing waste.

A. Assuming the MRS facility is located more than 50 miles from the repository, no quantity of SNF and solidified HLW resulting from the reprocessing of such a quantity of spent fuel containing in excess of 70,000 metric tons of heavy metal shall be emplaced in the repository until such time as a second repository is in operation.
[MGDS-RD 3.2.1.3.A][NWPA 114(d)]

B. The Engineered Barrier Segment shall be capable of supporting the waste receipt schedule shown in Table 3-3 of the MGDS-RD.
[MGDS-RD 3.2.1.3.J][CRD 3.2.1.B, 3.2.1.1.E, 3.7.4.2.G]

C. The Engineered Barrier Segment, together with the Repository Segment, shall be designed so that until permanent closure has been completed, radiation exposures, radiation levels, and releases of radioactive materials to unrestricted areas will at all times be maintained within the limits specified in 10 CFR 20 and applicable environmental standards for radioactivity established by the EPA, as listed in Section 3.2.2.
[MGDS-RD 3.2.1.3.K][10 CFR 60.111(a)]

3.2.1.3 CARETAKER MODE REQUIREMENTS

When the MGDS has reached its legislated or physical capacity for waste disposal, it will be in the caretaker mode. The option to retrieve any and all emplaced waste will be preserved for 50 years from the time emplacement is authorized. Performance confirmation continues during this mode.

The Engineered Barrier Segment, together with the Repository Segment, shall be designed so that until permanent closure has been completed, radiation exposures, radiation levels, and releases of radioactive materials to unrestricted areas will at all times be maintained within the limits specified in 10 CFR 20 and applicable environmental standards for radioactivity established by the EPA as listed in Section 3.2.2.
[MGDS-RD 3.2.1.4][10 CFR 60.111(a)]

3.2.1.4 RETRIEVAL MODE REQUIREMENTS

The retrieval mode includes all activities involved in retrieving waste after emplacement.

A. The Engineered Barrier Segment shall be designed and constructed to allow the retrieval of any SNF and HLW emplaced in the repository, during an appropriate period of operation of the facility, as specified by the Secretary of Energy.
[MGDS-RD 3.2.1.5.A][NWPA 122]

B. The waste packages shall be designed to preserve the option of waste retrieval throughout the period during which wastes are being emplaced and, thereafter, until the completion of a performance confirmation program and NRC review of the information obtained from such a program. To satisfy this objective, the geologic repository shall be designed so that any or all of the emplaced waste could be retrieved on a reasonable schedule starting at any time up to 50 years after waste emplacement operations are initiated, unless a different time period is approved or specified by the NRC. 10 CFR 60.111(b)(3) gives guidance for developing the schedule.
[MGDS-RD 3.2.1.5.B][10 CFR 60.111(b)(1)]

C. The Engineered Barrier Segment, together with the Repository Segment, shall be designed so that until permanent closure has been completed, radiation exposures, radiation levels, and releases of radioactive materials to unrestricted areas will at all times be maintained within the limits specified in 10 CFR 20 and applicable environmental standards for radioactivity established by the EPA, as listed in Section 3.2.2.

[MGDS-RD 3.2.1.5.C][10 CFR 60.111(a)]

3.2.1.5 CLOSURE AND DECOMMISSIONING MODE REQUIREMENTS

When permanent closure is authorized, the underground facility will be backfilled and sealed (if required and authorized); the surface facilities will be decontaminated and dismantled or converted to other uses; and an institutional barrier system will be established to preclude human activities for thousands of years that could compromise waste isolation.

The final state of the Engineered Barrier Segment shall conform to plans approved as part of the license for permanent closure.

[MGDS-RD 3.2.1.6][10 CFR 60.52(c)(2)]

3.2.1.6 POST-CLOSURE MODE REQUIREMENTS

This mode begins at the completion of closure of the repository and continues indefinitely.

A. The Engineered Barrier Segment design shall support and facilitate a post-permanent closure monitoring program in accordance with the application to amend the license for permanent closure.

[MGDS-RD 3.2.1.7.A][10 CFR 60.51(a)(1)]

B. The Engineered Barrier Segment shall be designed so that the Engineered Barrier Segment together with the Repository Segment, provides a reasonable expectation (TBD), based upon performance assessments, that the cumulative releases of radionuclides to the accessible environment for 10,000 years after disposal from all significant processes and events that may affect the disposal system shall have a likelihood of less than one chance in 10 of exceeding the quantities calculated according to Table 1 of Appendix A of 40 CFR 191. In addition, it shall have a likelihood of less than one chance in 1,000 of exceeding ten times the quantities calculated according to Table 1 of Appendix A of 40 CFR 191 (TBR).

[MGDS-RD 3.2.1.7.C][40 CFR 191.13(a)(TBR)]

3.2.1.7 OFF-NORMAL MODE REQUIREMENTS

The off-normal mode involves accident, natural disaster, and other unexpected scenarios and can occur during any of the other modes.

A. The Engineered Barrier Segment structures, systems, and components important to safety shall be designed to maintain control of radioactive waste and radioactive effluents, and permit prompt termination of operations and evacuation of personnel during an emergency in the GROA.

[MGDS-RD 3.2.1.8.B][10 CFR 60.131(b)(4)(i)]

B. The Engineered Barrier Segment structures, systems, and components important to safety shall be designed to satisfactorily perform their safety functions during and after credible fire or explosion conditions in the GROA.

[MGDS-RD 3.2.1.8.C][10 CFR 60.131(b)(3)(i)]

3.2.2 RADIOLOGICAL PROTECTION

3.2.2.1 GENERAL REQUIREMENTS

A. The Engineered Barrier Segment, together with the Repository Segment, shall, to the extent practicable, be designed and constructed with engineering controls based upon sound radiation protection principles to achieve occupational doses and doses to members of the public that are as low as is reasonably achievable (ALARA). ALARA principles shall be based on the applicable sections of the NRC Regulatory Guides 8.8 and 8.10.

[MGDS-RD 3.2.2.1.B][10 CFR 20.1101(b)]

B. The Engineered Barrier Segment, together with the Repository Segment, shall provide means to limit the levels of radioactive materials in effluents during normal operations, anticipated occurrences, and under accident conditions.

Under normal operations and anticipated occurrences, the annual dose equivalent to any real individual who is located beyond the controlled area must not exceed 25 mrem to the whole body, 75 mrem to the thyroid, and 25 mrem to any other organ as a result of exposure. These doses may be a result of any of the following:

1. planned discharges of radioactive materials, radon and its decay products excepted, to the general environment;

2. direct radiation from MGDS operations; and

3. any other radiation from uranium fuel cycle operation within the region. (TBR).

[MGDS-RD 3.2.2.1.F.1][40 CFR 191.03(a)(1)(TBR)]

C. The Engineered Barrier Segment, together with the Repository Segment, shall provide adequate shielding from radioactive components and high ambient temperatures.

[Derived]

D. The Engineered Barrier Segment, together with the Repository Segment, shall be designed so that until permanent closure has been completed, radiation exposures, radiation levels, and releases of radioactive materials to unrestricted areas will at all times be maintained within the limits specified in 10 CFR 20 and applicable environmental standards for radioactivity established by the EPA and specified in this document.

[MGDS-RD 3.2.1.5.C][10 CFR 60.111(a)]

3.2.2.2 PERSONNEL PROTECTION

The MGDS-RD specified no requirements for this section.

3.2.2.3 PUBLIC PROTECTION

A. The Engineered Barrier Segment, together with the Repository Segment, shall be designed to operate so that the total effective dose equivalent to individual members of the public from the licensed operation does not exceed 0.1 rem (1 mSv) in a year, exclusive of the dose contribution from the facility's disposal of radioactive material into sanitary sewerage in accordance with 10 CFR 20.2003. However, the facility may apply for prior NRC authorization to operate up to an annual dose limit for an individual member of the public of 0.5 rem (5 mSv) in accordance with 10 CFR 20.1301(c).

[Derived][10 CFR 20.1301(a),(c)]

B. If members of the public have access to controlled areas, the limits for members of the public shall continue to be applicable to those individuals.

[Derived][10 CFR 20.1301(b)]

C. The Engineered Barrier Segment, together with the Repository Segment, shall be designed to operate so that the dose in any unrestricted area from external sources does not exceed 0.002 rem (0.02 mSv) in any one hour.

[Derived][10 CFR 20.1301(a)(2)]

3.2.2.4 AIRBORNE RADIOACTIVE MATERIAL CONTROL

Airborne Radioactive Material Control Concentration of radioactive material in air shall, to the extent practicable, be controlled through the use of process or other engineering controls (e.g., containment or ventilation). Examples of this include containment, provided by the Engineered Barrier Segment, and ventilation, provided by the Repository.

[MGDS-RD 3.2.2.4.A][10 CFR 20.1701]

3.2.2.5 RADIATION MONITORING

Requirements for radiation monitoring have been allocated to the Repository. The Repository Segment will be equipped to monitor occupational exposures to radiation at levels sufficient to demonstrate compliance with the occupational dose limits of 10 CFR 20.

3.2.2.6 CRITICALITY PROTECTION

A. The Engineered Barrier Segment shall be designed to ensure that a nuclear criticality accident is not possible unless at least two unlikely, independent, and concurrent or sequential changes have occurred in the conditions essential to nuclear criticality safety. Each system shall be designed for criticality safety under normal and accident conditions. The calculated effective multiplication factor must be sufficiently below unity to show at least a five percent margin, after allowance for the bias in the method of calculation and the uncertainty in the experiments used to validate the method of calculation.

[MGDS-RD 3.2.2.6.A][10 CFR 60.131(b)(7)]

B. To mitigate the potential for nuclear criticality, the Engineered Barrier Segment shall be designed and constructed to comply with the nuclear criticality requirements specified by DOE Order 6430.1A, 1300-4.
[MGDS-RD 3.2.2.6.B][DOE Order 6430.1A, 1300-4]

3.2.2.7 LOW LEVEL WASTE DISPOSAL

The low-level waste disposal requirements have been allocated to the Repository Segment.

3.2.2.8 TRANSPORTATION PROTECTION

The transportation protection requirements have been allocated to the Repository Segment.

3.2.3 INTERFACE REQUIREMENTS

The Engineered Barrier Segment interfaces with the Repository Segment and the geologic setting. There are interfaces with the CRWMS WA and Transportation system elements. Other external interfaces (with other CRWMS system elements and with local utilities and government services) are provided by the Repository Segment. The Site Segment will have been closed or incorporated into the Repository Segment by the time the Engineered Barriers are used. The remnants of the Site Segment will include closed exploratory boreholes and excavations. It can be assumed that there will be no direct interfaces between the two segments. Selected exploratory boreholes may remain open during repository operations or longer as a part of the Performance Confirmation Program.

In the following sections, requirements on the segment that interfaces with the Engineered Barrier Segment are specified in the corresponding RDs, and are repeated here for information and symmetry. The word "will" is used to indicate that although the capability or characteristic is mandatory, it is provided by another segment and is not a requirement on the Engineered Barrier Segment.

3.2.3.1 ENGINEERED BARRIER SEGMENT - GEOLOGIC SETTING INTERFACE REQUIREMENTS

The Engineered Barrier Segment interfaces with the geologic setting at the surface of the rock that is exposed to the openings where waste packages are emplaced.

A. The waste packages will irradiate this surface with thermal, gamma, and neutron radiation. If a waste package fails, the geologic setting will be exposed to radionuclides.

1. Waste shall be emplaced such that the pre-waste-emplacement groundwater travel time along the fastest path of likely radionuclide travel from the disturbed zone to the accessible environment shall be at least 1,000 years, or such other travel time as may be approved or specified by the NRC.
[MGDS-RD 3.7.2.2.B] [10CFR60.113 (a)(2)]

2. The disposal system shall be designed so that the Engineered Barrier Segment, together with the Repository Segment and the geologic setting, provides a

reasonable expectation that for 1,000 years after disposal, undisturbed performance of the disposal system shall not cause the annual dose equivalent from the disposal system to any member of the public in the accessible environment to exceed 25 millirems (TBR) to the whole body or 75 millirems (TBR) to any critical organ. All potential pathways (associated with undisturbed performance) from the disposal system to people shall be considered, including the assumption that individuals consume 2 liters per day of drinking water from any significant source of groundwater outside of the controlled area.

[MGDS-RD 3.2.2.1.G][40 CFR 191.15(TBR)]

3. The Engineered Barrier Segment shall be designed so that the Engineered Barrier Segment together with the Repository Segment and the geologic setting provides a reasonable expectation, that for 1,000 years after disposal, undisturbed performance of the disposal system shall not cause the radionuclide concentrations averaged over any year in water withdrawn from any portion of a special source of groundwater, if one exists, to exceed:

   a. 5 picocuries per liter of radium-226 and radium-228 (TBR)

   b. 15 picocuries per liter of alpha-emitting radionuclides (including radium-226 and radium-228 but excluding radon)(TBR)

   c. an annual dose equivalent to the total body or any internal organ greater than 4 millirems (TBR) per year if an individual consumed 2 liters per day of drinking water from such a source of groundwater. These dose equivalencies would be from combined concentrations of radionuclides that emit either beta or gamma radiation.

   [Derived][40 CFR 191.16(a)(TBR)]

4. If any of the average annual radionuclide concentrations existing in a special source of groundwater, if one exists, before construction of the Engineered Barrier Segment already exceed the limits in 3.2.3.1.A.3, the Engineered Barrier Segment shall be designed so that the Engineered Barrier Segment together with the Repository Segment and the geologic setting provides a reasonable expectation that, for 1,000 years after disposal, undisturbed performance of the disposal system shall not increase the existing average annual radionuclide concentrations in water withdrawn from that special source of groundwater by more than the limits established in Section 3.2.3.1.A.3.

   [Derived][40 CFR 191.16(b)(TBR)]

5. As a minimum, adequate performance of the Engineered Barrier Segment during containment and isolation periods shall be assured under the water chemistry conditions specified in Table 3-3 (SCP Tables 8.3.5.9-2 and 8.3.6.10-3a)(TBV).

   [Derived]

B. The geologic setting provides structural support for the Engineered Barrier Segment, but could expose the waste packages to water, preferential pathways for radionuclide travel, and a geochemical environment.

Table 3-3 Water Quality Parameters (TBV)

Performance Measure	Constituent or Characteristic	Assumed Concentration or Value
Water quality	pH	5.5-9
	Cl^-	< 20 ppm
	F^-	< 6 ppm
	NO_3^-	< 15 ppm
	SO_4^{--}	< 50 ppm
	CO_3^{--}, HCO_3^-	< 200 ppm
	Total anions	< 220 ppm
	Organics	TBD
	Colloids	TBD
	O_2	0.1-8 ppm
	NH_3	< 1 ppm
	Si^{4+}	> 20 ppm
	Na^+	< 100 ppm
	K^+	< 50 ppm
	Na^+/Ca^{++}	> 1
	Total heavy metals (> Fe)	< 2 ppm
	Total other cations	< 50 ppm

H2OTABLE.088/7-9-93

The geologic setting will be selected to assure that releases of radioactive materials to the accessible environment following permanent closure conform to applicable environmental standards for radioactivity established by the EPA with respect to both anticipated processes and events and unanticipated processes and events.

[MGDS-RD 3.7.2.2.A] [10CFR60.112]

3.2.3.2 ENGINEERED BARRIER SEGMENT - SITE SEGMENT INTERFACE REQUIREMENTS

When the Engineered Barrier Segment is constructed, the Site Segment will have been reduced to exploratory boreholes and possibly other excavations that will have been filled and sealed. It can be assumed that there will be no direct interfaces between the two segments. Selected exploratory boreholes may remain open during repository operations or longer as a part of the Performance Confirmation Program. Prior to construction of the repository and the Engineered Barrier Segment, however, the following requirement applies to the Site Segment.

Site characterization facilities and systems are to be designed and constructed in accordance with 10 CFR 60.15(c)(1) such that they do not preclude the ability of Engineered Barrier Segment to meet the requirements in this document.

[MGDS-RD 3.2.1.1.B][10 CFR 60.15(c)(1)]

3.2.3.3 ENGINEERED BARRIER SEGMENT - REPOSITORY SEGMENT INTERFACE REQUIREMENTS

The Repository Segment provides all utility, logistics, safety, administrative, and mechanical support for the Engineered Barrier Segment. It also includes excavation and backfill machinery. The Engineered Barrier Segment has no inherent capability for these functions.

A. The Repository Segment provides systems and facilities for the functions and services shown in Table 3-4. Physical outputs from the Repository Segment to the Engineered Barrier Segment include: waste packages for emplacement, backfill and other barrier materials, and fresh air. Requirements associated with this interface include the following:

1. The Repository Segment will provide a reasonable assurance that the public and the environment will be adequately protected from the hazards posed by radioactive wastes emplaced therein.

   [MGDS-RD 3.7.2.8.C][42 USC 10131(b)(1)]

2. The design and operation of the Repository Segment will not compromise the Isolate Waste function of the Engineered Barrier Segment by adversely affecting the performance of the waste packages and the underground facility or the geologic setting.

   [Derived]

Table 3-4 Repository Segment Functions in Support of the Engineered Barrier Segment

Repository Segment Functions
Emplacement area development and access
Waste receipt, inventory control, preparation, transfer, emplacement, and retrieval, including shielding before and during emplacement and during retrieval
Lag storage for waste and waste packages
Backfilling and sealing (if required)
Closing and decommissioning
Utilities (ventilation, fire protection, electric power (if needed), removal of site generated waste, communication, monitoring, ...
Performance assessment/confirmation
Security, health physics, safety, training, QA
Administration, logistics, material control
Radiologic protection
Personnel support and habitability

3. All fluids used in the construction and operation of the underground facility will be strictly controlled to avoid introduction of products that could accelerate waste package corrosion or transport radionuclides.

   [MGDS-RD 3.7.2.6.K, 3.7.3.4.D]

4. Shielding allocations between the Repository Segment and the Engineered Barrier Segment have not been determined. Currently, the waste package is not required to be self-shielded. The assumption is that if the waste package is not self-shielded, the repository will provide the required shielding for radiological protection for all modes of facility operation. Shielding allocations will be determined by future trade studies.

   [Derived]

5. The Repository Segment will provide adequate shielding for a canisterized HLW with a maximum surface gamma dose rate of (TBD) rem/hr and a maximum surface neutron dose rate of (TBD) rem/hr.

   [Derived]

6. The Repository Segment will be capable of handling standard canistered HLW using a grapple provided by the waste producer.

   [MGDS-RD 3.2.3.2.2.C]

7. The Repository Segment will be capable of handling standard, failed, and nonstandard SNF, and nonstandard canistered HLW using grapples of its own design.

[MGDS-RD 3.2.3.2.2.D]

8. The Repository Segment will accommodate the emplacement concept (TBD) selected during ACD.

[Derived]

   a. The Repository Segment layout will be designed so that there shall be no water (in free liquid phase) in the emplacement area/location immediately before emplacing the WP. (TBV)

   [Derived]

   b. The Repository Segment design will prevent free-liquid-phase water from contacting the waste package during the period from package insertion until repository closure.

   [Derived]

   c. The Repository Segment layout will be designed so that a combination of characteristics will assist in keeping liquid water from contacting the waste packages for the first 300 to 1000 (TBV) years after closure.

   [Derived]

   d. The Repository Segment layout will also ensure that the design limit temperatures (TBD) for waste forms are not exceeded.

   [Derived]

9. Repository Segment test facilities and equipment will be compatible with the periodic testing and evaluation requirements of the waste package as required by 10 CFR 60.143.

[Derived]

10. If the design requires the waste form to be transferred for any purpose (such as from shipping casks to waste packages), the Repository Segment is responsible for the following:

   a. During Repository Segment operations, the temperature of the spent fuel waste form and the access of air to the waste form will be controlled before emplacement such that oxidation of spent fuel through existing cladding defects is less than the amount that would result in five percent (TBV) cladding strain.

   [Derived]

   b. Repository Segment operations at the surface handling facility will be designed so that cladding failure from mechanical abrasion or deformation considering thermally-induced effects will result in less than five percent (TBV) cladding strain.

   [Derived]

c. Repository Segment handling equipment and operations will be physically and chemically compatible with the canisterized and uncanisterized waste forms.

[Derived]

11. The Repository Segment will be designed to preclude the potential for nuclear criticality of the stored waste at any time after being received at the MGDS.

[Derived]

12. All construction materials or substances to be used underground will first be reviewed for potential effects on engineered barriers, waste isolation, and on site characterization or other testing. They may be used only following review and approval and only in those areas where use has been approved, subject to whatever controls are established. Such materials or substances include, but are not limited to, the following (TBD).

a. Concrete and other cementitious materials, such as shotcrete and grout

b. Ground support materials, including chemical/resin anchorages

c. Water (pH and organic content) and any additives to water for identification (tracers) or construction, operation, or testing

d. Hydrocarbons, diesel fuel, and solvents

e. Organic materials

f. Explosives and blasting ancillaries, including the introduction of pressurized drilling water into the rock, and the chemical residues that are the products of blasting.

[Derived]

13. To the extent practicable, lining and grouting material selection (if used) will consider material chemistry and take into account potential chemical interactions with groundwater that could affect waste package corrosion and radionuclide solubility.

[Derived]

14. The orientation, geometry, layout, and depth of the underground facility, and the design of any engineered barriers that are part of the underground facility will contribute to the containment and isolation of radionuclides.

a. Rock support and other structural anchoring materials will be compatible with waste isolation.

b. Underground facility configuration (access and drift location, diameter, orientation, geometry, separation and depth) will contribute to, or not detract from, the isolation capability of the site. (TBD)

[MGDS-RD 3.7.3.4.A][10 CFR 60.133(a)(1)]

15. The design of the underground facility will incorporate excavation methods that will limit the potential for creating a preferential pathway for groundwater to contact the waste packages or radionuclide migration to the accessible environment.

    a. Techniques used for excavation will control overbreak of rock and minimize disturbance to the integrity of the adjoining rock mass to limit blast-induced changes to permeability.

    b. Blast-induced damage to the in situ permeability will be held to a reasonable minimum (TBD), consistent with good underground technological practice.

    c. Excavation overbreak is limited to (TBD) in accordance with good underground technological practice.
    [MGDS-RD 3.7.2.6.G.2][10 CFR 60.133(f)]

16. The following requirements apply to seals (if required) for underground openings.

    a. Seals for accesses and boreholes will be designed so that following permanent closure they do not become pathways that compromise the geologic repository's ability to meet the performance objectives for the period following permanent closure.
    [MGDS-RD 3.7.3.2.E.1][10 CFR 60.134(a)]

    b. Materials and placement methods for shaft, ramp and borehole seals will be selected to reduce, to the extent practicable, the potential for creating preferential pathways for groundwater to contact the waste packages, or reduce radionuclide migration through existing pathways. (TBD)
    [MGDS-RD 3.7.3.2.E.2][10 CFR 60.134(b)(1) and (2)]

    c. Seals for accesses and boreholes will be designed to assure that releases of radioactive materials to the accessible environment following permanent closure conform to applicable environmental standards for radioactivity established by the EPA with respect to both anticipated processes and events and unanticipated processes and events.
    [MGDS-RD 3.7.3.2.E.3][10 CFR 60.112]

17. The underground facility will be designed so that the performance objectives will be met taking into account the predicted thermal and thermomechanical response of the host rock, and surrounding strata, and groundwater system.
    [MGDS-RD 3.7.3.4.C][10 CFR 60.133(i)]

B. The Engineered Barrier Segment outputs to the Repository Segment include heat, exhaust air, retrieved waste packages, and performance confirmation data.

1. The Engineered Barrier Segment shall be constructed to permit tests appropriate or necessary (as determined by the NRC) for the administration of the regulations of 10 CFR 60. The tests may be performed in situ or in Repository Segment Facilities. The tests may include tests of:

   a. radioactive waste;

   [Derived][10 CFR 60.74(a)(1)]

   b. engineered barriers; and

   [Derived][10 CFR 60.74(a)(2)]

   c. other equipment and devices used in connection with the receipt, handling, retrieval or storage of radioactive waste.

   [Derived][10 CFR 60.74(a)(4)]

2. The tests required in Section 3.2.3.3.B.1 above include a performance confirmation program carried out in accordance with Subpart F of 10 CFR 60. The Engineered Barrier Segment design shall provide input on:

   a. changes in underground conditions during waste emplacement operations; and

   [Derived][10 CFR 60.140(d)(2)]

   b. the functioning of natural and engineered systems and components that are designed or assumed to operate as barriers after permanent closure.

   [Derived][10 CFR 60.140(d)(2)]

3. The Engineered Barrier Segment, together with the repository design and operations, shall include provisions for controlling doses such that when approved operational procedures are followed, the exposure doses specified in 10 CFR 20.1201 for occupational doses, and 10 CFR 20.1301 for individual members of the public, are not exceeded.

   [Derived][10 CFR 20.1201; 10 CFR 20.1301]

4. The Engineered Barrier Segment shall be able to withstand shock (TBD) and vibration (TBD) levels characteristic of handling, emplacement, retrieval and seismic environments, without adverse impacts on waste containment and isolation capability.

   [Derived]

5. Performance confirmation testing interfaces shall incorporate the following requirements:

   a. Waste emplacement methods and configurations shall permit in situ monitoring of the thermomechanical response of the emplacement areas until permanent closure to ensure that the performance of the natural and engineering features are within design limits.

   [MGDS-RD 3.7.2.7.D][10 CFR 60.141(e)]

b. To support the waste package monitoring program required by 10 CFR 60.143(a) and (b), Waste emplacement methods and configurations shall be designed to facilitate laboratory experiments that focus on the internal condition of the waste packages.

[Derived][10 CFR 60.143(c)]

6. Provisions shall be made for monitoring underground conditions and evaluating them against design assumptions.

[Derived][10 CFR 60.141(b)]

7. The emplacement drift access and waste emplacement seals shall (if required) be designed to limit the potential for creating a preferential pathway either for groundwater to contact the waste packages or radionuclide migration through existing pathways. If the seals are determined to be important to waste isolation, a comparative evaluation of alternatives shall be performed. (TBD)

[Derived]

3.2.3.4 ENGINEERED BARRIER SEGMENT - WASTE ACCEPTANCE INTERFACE REQUIREMENTS

The Engineered Barrier Segment interfaces with HLW and SNF as received from WA.

A. WA will provide standard HLW meeting the following criteria:

1. Canistered HLW, which is borosilicate glass sealed inside an austenitic stainless steel canister with a concentric neck and lifting flange (TBV).

   a. Total length: 3.00 meters (+0.005, -0.020m)(TBV).

   b. Diameter: 61.0 centimeters (+1.5, -1.0cm)(TBV).

   c. Weight: Up to 2500 kilograms (TBV).

   d. Fill height: Equivalent to at least 80% of the volume (TBV) of the empty canister.

   e. Total heat generation rate: Up to 1500 watts per canister (TBV) at the year of shipment.

   f. Waste temperature: Will not have exceeded 400° C (TBV) during transit to ensure the glass transition temperature was not exceeded.

[MGDS-RD 3.2.3.2.2.B.1]

2. Inert cover gas leak rate of the outermost closure will be less than (10)-4 ATM-CC/SEC.

[WA-SRD 3.7.1.2.1.2.1.B(7)]

3. Canister will be labelled with a unique alphanumeric identifier (TBD).

[Derived]

4. Estimated inventory of radionuclides will be (TBD).
[WA-SRD 3.7.1.2.1.2.B]

5. Canistered waste forms will have a maximum surface gamma dose rate of up to $(10)^5$ rem/hr (TBV) and a maximum surface neutron dose rate of up to 10 rem/hr (TBV), at the year of shipment to the MGDS.
[Derived][WA-SRD 3.7.1.2.1.2.17]

B. WA will provide nonstandard canisterized HLW, which is any HLW that does not fall within the standard canisterized HLW description in Section 3.2.3.4.A.1. (TBD)
[MGDS-RD 3.2.3.2.2.B.2][10 CFR 961.11, ARTICLE VI.A.1]

C. WA will provide standard SNF meeting the following criteria:

1. Spent fuel waste form will be the high level radioactive waste and any encapsulating or stabilizing matrix, such as cladding that is associated with spent fuel.

a. Total length: 14 feet, 11 inches or less for the boiling water reactor (BWR) assembly and 14 feet, 10 inches or less for the pressurized water reactor (PWR) assembly (TBV).
[MGDS-RD 3.2.3.2.2.A.1][10 CFR 961.11, App. E, B.1]

b. Cross-section: 6 inches x 6 inches or less for BWR and 9 inches x 9 inches or less for PWR (TBV).
[MGDS-RD 3.2.3.2.2.A.1][10 CFR 961.11, App. E, B.1]

c. Nonfuel Components: Nonfuel components including, but not limited, to, control spiders, burnable poison rod assemblies, control rod elements, thimble plugs, fission chambers, and primary and secondary neutron sources, that are contained within the fuel assembly, or BWR channels that are an integral part of the fuel assembly, which do not require special handling, may be included as part of the SNF delivered for disposal.

Note: Fuel that does not meet these specifications shall be classified as Nonstandard Fuel-Class NS-2.
[MGDS-RD 3.2.3.2.2.A.1][10 CFR 961.11, App. E, B.2]

d. Cooling: The minimum cooling time for fuel is five (5) years.

Note: Fuel that does not meet this specification shall be classified as Nonstandard Fuel-Class NS-3.
[MGDS-RD 3.2.3.2.2.A.1][10 CFR 961.11, App. E, B.3]

e. Non-Light water reactor (LWR) Fuel: Fuel from other than LWR power facilities shall be classified as Nonstandard Fuel-Class NS-4. Such fuel may be unique and require special handling, storage, and disposal facilities.
[MGDS-RD 3.2.3.2.2.A.1][10 CFR 961.11, App. E, B.4]

f. Consolidated Fuel Rods: Fuel which has been disassembled and stored with the fuel rods in a consolidated manner shall be classified as Nonstandard Fuel Class NS-5.

[MGDS-RD 3.2.3.2.2.A.1][10 CFR 961.11, App E., B.5]

g. Weight: Up to (TBD) kilograms.

[Derived]

2. Temperature will not have exceeded 350° C (TBV) during storage under inert gas.

[Derived]

3. SNF assembly will be labeled with unique alphanumeric identifier.

[Derived]

4. Estimated inventory of radionuclides will be (TBD).

[Derived]

5. Dose rate at shipment will be up (TBD).

[Derived]

D. WA will provide failed SNF meeting the criteria specified in 10 CFR 961.11 Appendix E, Section B.6.

[MGDS-RD 3.2.3.2.2.A.2][10 CFR 961.11, App. E, B.6]

E. WA will provide nonstandard SNF, which is any SNF that does not fall within the standard or failed SNF description in Sections 3.2.3.4.C and D. (TBD)

[MGDS-RD 3.2.3.2.2.A.3][10 CFR 961.11, Article VI.A.1]

3.2.3.5 ENGINEERED BARRIER SEGMENT - TRANSPORTATION INTERFACE REQUIREMENTS

The Engineered Barrier Segment interfaces with transportation are (TBD).

3.2.4 PHYSICAL CHARACTERISTICS

The selection of standards to meet the requirements specified in this section shall be made as a result of engineering analysis, shall be reviewed and approved by the responsible design organizations, and shall be documented in accordance with appropriate implementing documents.

[MGDS-RD 3.2.4][CRD 3.2.4]

3.2.4.1 PROTECTIVE COATINGS AND MATERIALS

Facilities and equipment that require coating to enhance either decontamination of surfaces or because of environmental requirements, shall be coated in accordance with American Society for Testing and Materials D4256, or other DOE-approved guideline, e.g., DOE Order 6430.1A, 0900-99.0.

[MGDS-RD 3.2.4.1][CRD 3.2.4.1]

3.2.4.2 HABITABILITY

Habitability requirements have been allocated to the Repository Segment. These issues include, but are not limited too: environmental controls, heating, ventilation, air-conditioning, illumination, acoustical noise, vibration, underground personnel enclosures.

3.2.4.3 SECURITY

Security requirements have been allocated to the Repository Segment. The security includes protection from sabotage and theft as well as unauthorized access to underground facilities and high radiation areas.

3.2.4.4 RADIOACTIVE MATERIALS MONITORING

The Requirements for monitoring radioactivity have been allocated to the Repository Segment.

3.2.4.5 SHIELDING

Allocation of shielding requirements to the waste package, if required, is TBD.

3.2.4.6 DESIGN BASIS EVENTS

A. An Engineered Barrier Segment design objective shall be to ensure that conservatively estimated consequences of normal operations and credible accidents are limited in accordance with requirements contained in DOE Order 6430.1A, Section 1300-1.4, Guidance on Limiting Exposure of the Public. Events to be considered based on site function and licensing requirements are (TBD).
[MGDS-RD 3.2.4.6.A][DOE Order 6430.1A, 1324-2.1]

B. The probable consequence of design basis accidents (DBAs) involving internally generated missiles or blast effects shall be considered. Such DBAs typically involve failure of high-speed rotating machinery, cranes, experimental facilities, high-energy fluid system components, or explosives. Structures required to function following such accidents must be designed to withstand these DBAs.
[MGDS-RD 3.2.4.6.D][DOE Order 6430.1A, 0111-99.0]

3.2.5 SYSTEM QUALITY FACTORS

The quality factors for the Engineered Barrier Segment are described in this section. These factors include Reliability, Maintainability, Inspectability, Availability, and Service Life.

3.2.5.1 RELIABILITY

The Engineered Barrier Segment shall be designed and constructed to provide a fault tolerant (or fail-safe) system that allows for the continued management, handling, transfer, storage, emplacement, retrieval, and isolation of SNF and HLW in a safe manner that optimally protects health, safety, and the environment under all operational conditions.

Nothing in this section shall be construed to indicate that NRC mandated redundancy of systems may be neglected.

[MGDS-RD 3.2.5.1][CRD 3.2.5.1.A]

3.2.5.1.1 RELIABILITY PROGRAM REQUIREMENTS

The Engineered Barrier Segment design organization shall establish and execute a reliability, availability, and maintainability program to support Integrated Logistics Support and the general engineering program for the Engineered Barrier Segment. Reliability shall be addressed as an element of design reviews.

[MGDS-RD 3.2.5.1.1][CRD 3.2.5.1.B]

3.2.5.1.2 RELIABILITY OF EQUIPMENT[2]

A. A failure modes and effects analysis shall be performed for all major equipment whose failure can result in personnel injury or illness. Based on this analysis, designs for the Engineered Barrier Segment shall be developed to ensure reliability which minimizes safety hazards to the extent possible. Under such design conditions, failures shall not result in personal injury or occupational illness. If designs cannot be developed to these requirements, then the reliability of systems will be shown by analysis to be such as to minimize the probability of injury or illness to personnel. In demonstrating system reliability, MIL-STD-882B shall be considered in the design, where applicable. (These requirements differ from "items important to safety" and "items important to waste isolation", both of which have very specific meanings for meeting NRC requirements. Further, these criteria do not supplant radiological standards contained in NRC or EPA requirements; e.g., the radiological standards of 10 CFR 20. They also do not address reliability of the Engineered Barrier System.)

[MGDS-RD 3.2.5.1.2][10 CFR 20][CRD 3.2.5.1.D]

B. Reliability of the Engineered Barrier Segment shall be as follows:

1. Waste Package (TBD)
   a. Waste Form (TBD)
   b. Waste Container (TBD)
   c. Internal Structure (TBD)
   d. Packing, shielding and absorbing materials (TBD)

2. Backfill in emplacement drifts (if used (TBD))

3. Emplacement hardware (TBD)

[Derived]

[2]These requirements are applicable only during preclosure

3.2.5.1.3 STRUCTURE, SYSTEM, AND COMPONENT RELIABILITY

Engineered Barrier Segment structures, systems, and components that are important to safety shall be designed, qualified, constructed, located, and operated so that they continue to perform their safety functions effectively during and after credible fire and explosion conditions in the GROA.

[MGDS-RD 3.2.5.1.3][10 CFR 60.131(b)(3)]

3.2.5.1.4 UTILITIES RELIABILITY

Requirements for utilities have been allocated to the Repository Segment.

3.2.5.1.5 SYSTEM THROUGHPUT

All Engineered Barrier Segment equipment shall be shown by analysis to have adequate reliability to allow the MGDS to meet the throughput requirements identified in the MGDS-RD, Table 3-3, and the mission for the MGDS.

[MGDS-RD 3.2.5.1.5][CRD 3.2.5.1.E]

3.2.5.2 MAINTAINABILITY/INSPECTABILITY

3.2.5.2.1 TESTING AND MAINTENANCE

Engineered Barrier Segment systems, structures and components that are important to safety shall be designed to permit inspection, maintenance, and testing as necessary to ensure their continued functioning and readiness during the operational period until permanent closure of the repository.

[MGDS-RD 3.2.5.2.1][10 CFR 60.131(b)(6)]

3.2.5.2.2 PHYSICAL CLEARANCE

Requirements for physical clearance apply to the Repository Segment.

3.2.5.2.3 MEAN TIME TO REPAIR

The mean time to repair each piece of installed equipment in the Engineered Barrier Segment shall be identified in design calculations. Sufficient parts must be maintained in inventory for items to be repaired in place and qualified repair personnel available to ensure the mean time to repair can be achieved.

[MGDS-RD 3.2.5.2.3]

3.2.5.2.4 REPLACEMENT EQUIPMENT

A. Replacement equipment shall be provided as necessary for equipment which must be removed to be repaired to support the mean time to repair. Such equipment shall be procured in accordance with original equipment requirements and be accessible and transportable.

[MGDS-RD 3.2.5.2.4.A]

B. A lifting device having the capability to remove and install equipment shall be provided for equipment that weighs more than the limits for human portability (Section 3.2.9).

[MGDS-RD 3.2.5.2.4.B]

C. Replaceability shall be addressed during design for all equipment.

[MGDS-RD 3.2.5.2.4.C]

3.2.5.2.5 FAULT ISOLATION

When fault isolation is important in addressing mean times to repair, fault detection shall be built into the system in terms of electronic detection, measurement points, etc., to the extent practicable.

[MGDS-RD 3.2.5.2.5]

3.2.5.2.6 MAINTENANCE IN RADIOACTIVE ENVIRONMENTS

Equipment which normally operates in a radioactive environment or in the vicinity of radioactive components shall be designed to be moved to a nonradioactive environment for maintenance or repair, whenever possible. When that is not possible, the design shall allow for installation of temporary shielding, permit minimizing radiation exposure times, and provide sufficient space for ease of operation, maintenance, and repair.

[MGDS-RD 3.2.5.2.6][10 CFR 60.131(a)(2)]

3.2.5.2.7 IMPORTANT TO SAFETY EQUIPMENT

Equipment which could fail during an operation that is important to safety, shall be designed to permit recovery of the operation without compromising the health and safety of the public or the MGDS employees (TBV).

[MGDS-RD 3.2.5.2.7]

3.2.5.2.8 DESIGN FOR MAINTAINABILITY

A. The Engineered Barrier Segment shall be designed and constructed so that facilities are easily and economically maintained. Maintainability considerations include:

1. Use of easily maintained features and durable materials

2. Ease of replacement of installed equipment (i.e., without structure modification)

3. Accessibility of installed equipment and building systems for performance of maintenance

4. Consideration of life cycle costs in selection of features, systems, and finishes

5. Provisions of maintenance instructions and as-built drawings.

[MGDS-RD 3.2.5.2.8.A][DOE Order 4700.1, p. V-17, q]

B. Engineered hardware shall be designed to meet the maintainability requirements as specified in UCRL 15673, Human Factors Guidelines for Maintainability of Department of Energy Nuclear Facilities, Section 1. Should hardware require movement by personnel in order to provide accessibility for maintenance, requirements for portability (Section 3.2.9 of this document) shall be included in the design (TBV).
[MGDS-RD 3.2.5.2.8.B][UCRL 15673, Section 1]

C. Facility support equipment shall conform to the requirements for maintainability specified in UCRL 15673, Section 2 (TBV).
[MGDS-RD 3.2.5.2.8.C][UCRL 15673, Section 2]

D. The design of equipment, facilities, and systems shall conform to the maintainability requirements specified in UCRL 15673, Section 3 (TBV).
[MGDS-RD 3.2.5.2.8.D][UCRL 15673, Section 3]

E. The time required to perform work in the vicinity of radioactive components shall be kept to an absolute minimum, for example, by providing sufficient space for ease of operation and designing equipment for ease of repair and replacement.
[MGDS-RD 3.2.5.2.8.E][10 CFR 60.131(a)(2)]

3.2.5.2.9 MEAN DOWNTIME

Subsystems and equipment of the Engineered Barrier Segment shall be designed with a mean downtime that is consistent with the availability requirements specified in Section 3.2.5.3 of this document. The mean down time shall include mean time to repair, disruptive preventive maintenance time, logistics delay time (LDT), administrative delay time (ADT), and safety delay time.

[MGDS-RD 3.2.5.2.9]

3.2.5.3 AVAILABILITY

A. The Engineered Barrier Segment design shall address availability as a factor in determining the operational capacity of its subsystems.
[MGDS-RD 3.2.5.3.A][CRD 3.2.5.3.A]

B. Availability shall be addressed at design reviews, to include the design and logistics factors listed in Section 3.2.5.2.9.
[MGDS-RD 3.2.5.3.B][CRD 3.2.5.3.B]

3.2.5.4 SERVICE LIFE

Engineered Barrier Segment structures, systems, and components shall be designed for a maintainable preclosure service life of at least (TBD) years or the period of time authorized by the license granted by the NRC in accordance with the provisions of 10 CFR 60.3.

[MGDS-RD 3.2.5.4.B][CRD 3.2.5.4]

3.2.5.5 OVERALL UTILIZATION

Overall utilization is the product of scheduled utilization, availability, and worker productivity, where scheduled utilization is the ratio of scheduled operating hours per year to total hours per year. Availability is the system element availability as required in Section 3.2.5.3. Worker productivity is the average fraction of a work period that workers perform required work; time waiting for resources, break time, dress out time, and other non-productive time is not included.

A. Overall utilization shall be a subject addressed at design reviews.
[MGDS-RD 3.2.5.5.A][CRD 3.2.5.5.A]

B. Design of the MGDS shall consider the appropriate overall utilization in the design of the system to meet the applicable portions of the WA schedule of Table 3-3.
[MGDS-RD 3.2.5.5.B][CRD 3.2.5.5.B]

3.2.6 ENVIRONMENTAL REQUIREMENTS

3.2.6.1 NATURAL ENVIRONMENT

A. Engineered Barrier Segment structures, systems, and components important to safety shall be designed so that the effects of anticipated natural phenomena and environmental conditions will not interfere with necessary safety functions.
[Derived][10 CFR 60.131(b)(1)]

B. Natural phenomena and environmental conditions considered in the design shall include events and conditions such as earthquakes, humidity, temperature, sand, dust, and fungus, bacteria, and algae. The design bases shall reflect appropriate consideration of the most severe conditions reported for the site and surrounding area, as contained in the Reference Information Base (RIB), and appropriate combinations of these conditions with both normal and accidental conditions. These conditions include the effects of natural phenomena, with appropriate margins to take into account the limitations of the data and the period of time in which the data have accumulated.
[MGDS-RD 3.2.6.1.A & B][CRD 3.2.6.1.A, CRD 3.2.6.1.B]

C. All Engineered Barrier Segment structures, systems, and components shall be designed so that their failure does not lead to the loss of the safety function of structures, systems, and components that are important to safety.
[MGDS-RD 3.2.6.1.C]

D. The design of structures shall include the effects of stresses and movements resulting from variations in temperature, including the effect of emplaced waste packages. The rise and fall in the temperature must be determined, from information in the RIB, for the localities in which the structures are to be built.
[MGDS-RD 3.2.6.1.I][DOE Order 6430.1A, 0111-2.8.4]

3.2.6.2 INDUCED ENVIRONMENT

3.2.6.2.1 FIRE, EXPLOSION, AND OTHER DISASTER PROTECTION

Engineered Barrier Segment structure, systems, and components important to safety shall be designed to perform their safety functions during and after credible fire or explosion conditions at the GROA.

[Derived][10 CFR 60.131(b)(3)(i)]

3.2.6.2.2 FIRE RESISTANCE

To the extent practicable, the Engineered Barrier Segment components shall be designed to incorporate the use of non-combustible and heat resistant materials.

[Derived][10 CFR 60.131(b)(3)(ii)]

3.2.6.2.3 VIBRATION

Equipment supports shall be designed to preclude resonance of the structure on which reciprocating or rotating equipment is supported. The operating frequency of supported equipment must be determined from manufacturers' data prior to completion of structural design. Resonance must be prevented by designing equipment isolation supports to reduce the dynamic transmission of the applied load to as low a level as can be economically achieved in the design.

[MGDS-RD 3.2.6.2.3][DOE Order 6430.1A, 0111-2.8.1]

3.2.6.2.4 CREEP AND SHRINKAGE

Concrete and masonry components of the Engineered Barrier Segment shall be designed for stresses and deformations induced by creep and shrinkage. For concrete and masonry structures, if used, the minimum linear coefficient of shrinkage must be assumed to be 0.0002 inch/inch, unless a detailed analysis is undertaken. The theoretical shrinkage displacement shall be computed as the product of the linear coefficient and the length of the member.

[MGDS-RD 3.2.6.2.4][DOE Order 6430.1A, 0111-2.8.5]

3.2.6.2.5 UNDERGROUND OPENINGS

Requirements for underground openings have been allocated to the Repository Segment.

3.2.7 TRANSPORTABILITY/MODULARITY

To the extent practical, all temporary Engineered Barrier Segment subsystems/components shall be of either transportable or modular design.

[MGDS-RD 3.2.7][CRD 3.2.7]

3.2.8 FLEXIBILITY, EXPANSION, AND INTEGRATION

The Engineered Barrier Segment shall be designed and constructed so as not to preclude the later addition, where appropriate, of expansion of its basic mission, e.g., increased storage area, or increased disposal capacity.

[MGDS-RD 3.2.8][CRD 3.2.8]

3.2.9 PORTABILITY AND LOAD CARRYING

Equipment and components that are developed for the Engineered Barrier Segment and that must be moved over short distances for maintenance or other purposes shall be designed to facilitate movement by taking into consideration such things as weight, hand grips, lifting aids, etc.

[MGDS-RD 3.2.9][CRD 3.2.9]

3.3 DESIGN AND CONSTRUCTION

3.3.1 GENERAL DESIGN CRITERIA

A. Alternative designs shall be prepared for major engineering features important to waste isolation, with particular attention to the alternatives that would provide longer radionuclide containment and isolation. These alternative designs are for use in the analysis required by 10 CFR 60.21(c)(1)(ii)(D).

[MGDS-RD 3.2.1.1.J][10 CFR 60.21(c)(1)(ii)(D)]

B. All site survey, planning and design activities shall consider the criteria of DOE Order 6430.1A. For facilities over which the NRC has regulatory authority, NRC requirements shall be the only controlling nuclear safety requirements.

[MGDS-RD 3.3.1.A][CRD 3.3.1.A]

C. Unless specifically waived in writing by OCRWM, the design and construction of all Engineered Barrier Segment facilities and equipment shall be accomplished using the criteria specified in the appropriate section of DOE Order 6430.1A. For facilities over which the NRC has regulatory authority, NRC requirements shall be the only controlling nuclear safety requirements. The following sections are addressed in DOE Order 6430.1A.

1. General Requirements
2. Site and Civil Engineering
3. Concrete
4. Masonry
5. Metals
6. Woods and Plastics
7. Thermal and Moisture Protection
8. Doors and Windows
9. Finishes
10. Specialties
11. Equipment
12. Furnishings
13. Special Facilities

14. Conveying Systems
15. Mechanical
16. Electrical

[MGDS-RD 3.3.1.B][CRD 3.3.1.A]

D. State, county, municipal, and other local regulations, building and zoning codes, and ordinances shall be reviewed and incorporated, as appropriate, in the Engineered Barrier segment requirements whenever those practices are not in conflict with the requirements of DOE Order 6430.1A.

[MGDS-RD 3.3.1.C]

E. Should conflicts exist between DOE Order 6430.1A and state, county, municipal, or local codes or regulations, a deviation from the Order shall be requested in accordance with Section 0101-2, Criteria Deviations, of DOE Order 6430.1A. All deviations, whether from DOE Order 6430.1A to meet NRC requirements or current engineering practices, must be documented.

[MGDS-RD 3.3.1.D][DOE Order 6430.1A, 0101-2]

F. All design bases shall be consistent with the results of site characterization activities. As information from site characterization relevant to design bases becomes available, it will be incorporated in the RIB.

[MGDS-RD 3.3.1.E][10 CFR 60.130]

G. The Engineered Barrier Segment design shall meet all relevant requirements imposed by 10 CFR 60.

[MGDS-RD 3.3.1.F][CRD 3.3.1.B]

H. Standards or other documents accepted by the DOE, identified as sufficient or more appropriate for the support of design, shall be used at the discretion of the designers, provided there are no conflicts with the identified requirements of the Engineered Barrier Segment. Examples of this type of documentation are Nuclear Regulatory Guidelines, Regulatory Guides and other similar types of guidance provided by the NRC.

[MGDS-RD 3.3.1.G][CRD 3.3.1.C]

I. When evaluating design concepts, materials, and process alternatives, consideration shall be given to cost effectiveness. This consideration shall be secondary to realization of designs that will be technically conservative and meet the regulatory performance objectives.

[Derived]

3.3.2 ELECTROMAGNETIC RADIATION

Requirements for electromagnetic radiation have been allocated to the Repository Segment. The Repository Segment will provide protection for circuitry and other equipment sensitive to electromagnetic radiation.

3.3.3 NAMEPLATES AND MARKINGS

A. Equipment and any parts of that equipment to be used by personnel shall be identified with appropriate labels. Equipment and equipment parts include, but are not limited to, system and subsystem component groupings, individual components, display markings, instructions, procedure manuals, storage spaces, access panels, and special purpose tools.

[MGDS-RD 3.3.3.A][DOE Order 6430.1A, 1300-12.4.11]

B. The label shall indicate clearly and concisely the function and purpose of the item being labeled. The information provided on the label shall be (TBD). Unnecessary information (e.g., information used only for manufacturing purposes) must not be included. Hierarchial labeling should be used to facilitate component location on control panels, if used.

[MGDS-RD 3.3.3.B][DOE Order 6430.1A, 1300-12.4.11]

C. The label information shall be easy to understand. Words, symbols, and other markings in a label or instruction shall be accurate and not ambiguous. The terminology used shall have commonly accepted meaning for all users.

[MGDS-RD 3.3.3.C][DOE Order 6430.1A, 1300-12.4.11]

D. Label design shall be consistent with use of abbreviations and acronyms minimized. Various equipment labels placed on the same or similar pieces of equipment and serving similar functions must use the same material, color, font type, relative location to component, general format, and other configuration features to promote simplicity and avoid clutter. The terminology used for equipment, procedures, and training materials must be the same for each case.

[MGDS-RD 3.3.3.D][DOE Order 6430.1A, 1300-12.4.11]

E. Permanent labels shall be attached to equipment or parts of equipment in such a manner that environmental conditions or usage by personnel will not remove or destroy the label.

[MGDS-RD 3.3.3.E][DOE Order 6430.1A, 1300-12.4.11]

F. The identification markings and identification plates, tags, or labels, when used on equipment, systems, subsystems, assemblies, subassemblies, components and piece parts if necessary, shall be permanent for the (preclosure, in the case of waste packages) life of the item including withstanding environmental conditions and cleaning requirements. These markings shall be accomplished using methods that shall not impact the life and use of the item. Additionally, the label shall be attached to the equipment or part thereof without damaging the equipment.

[MGDS-RD 3.3.3.F][CRD 3.3.3]

(See Section 3.3.6.6 for other labeling and marking requirements).

3.3.4 WORKMANSHIP

A. Special processes, including welding, heat treating, and nondestructive testing, shall be controlled and accomplished by qualified personnel using qualified procedures in accordance with applicable codes, standards, specifications, criteria, and other special requirements. A controlled list of special processes shall be compiled and maintained as the need for specific special processes is identified.

[MGDS-RD 3.3.4.A][DOE/RW-0333P]

B. The workmanship criteria shall reflect the currently applicable codes, standards, regulations, architectural, engineering principles and practices specified in DOE 6430.1A (General Design Criteria) - 0109 Reference Standards and Guides, including but not limited to:

AASHTO	American Association of State Highway and Transportation Officials
ACI	American Concrete Institute
AISC	American Institute of Steel Construction
AISI	American Iron and Steel Institute
ANS	American Nuclear Society
ANSI	American National Standards Institute
AREA	American Railway Engineering Association
ARI	Air Conditioning and Refrigeration Institute
ASCE	American Society of Civil Engineers
ASHRAE	American Society of Heating, Refrigerating, and Air-Conditioning Engineers
ASME	American Society of Mechanical Engineers
ASTM	American Society for Testing and Materials
AWS	American Welding Society
IEEE	Institute of Electrical and Electronics Engineers
MBMA	Metal Building Manufacturers Association
NAAMM	National Association of Architectural Metal Manufacturers
NAPHCC	National Association of Plumbing-Heating-Cooling Contractors
NCMA	National Concrete Masonry Association
NEMA	National Electrical Manufacturers Association
NFPA	National Fire Protection Association
NIST	National Institute of Standards and Technology
PCA	Portland Cement Association
PCI	Prestressed Concrete Institute

[MGDS-RD 3.3.4.B][DOE Order 6430.1A-0109]

3.3.5 INTERCHANGEABILITY

To the extent practicable, components such as containers, shields, and internal structures, which are used for similar functions for SNF and HLW containment and isolation shall be of identical manufacture and model. The objective is to simplify logistical support such as repair parts supply, training, and documentation.

[MGDS-RD 3.3.5][CRD 3.3.5]

3.3.6 SAFETY

This section addresses the occupational safety requirements for the Engineered Barrier Segment. The safety of workers and members of the public is paramount and is addressed throughout this document.

3.3.6.1 GENERAL REQUIREMENTS

A. All Engineered Barrier Segment work places shall be designed to be free from recognized hazards that are causing or likely to cause death or serious physical harm to employees.

[MGDS-RD 3.3.6.1.A][29 USC 651 et seq.]

B. All Engineered Barrier Segment work places shall be designed to comply with occupational safety and health standards promulgated under 29 CFR 1910, 29 CFR 1926, and 30 CFR 57. When more than one standard is applicable, the design shall comply with the most stringent standard.

[MGDS-RD 3.3.6.1.B][29 CFR 1910; 29 CFR 1926; 30 CFR 57]

3.3.6.2 SYSTEM SAFETY PRECEDENCE

The order of precedence for satisfying system safety requirements and resolving identified hazards shall be as follows:

A. The first priority of design shall be to eliminate hazards. If an identified hazard cannot be eliminated, the associated risk shall be reduced to an acceptable level through design selection.

[MGDS-RD 3.3.6.2.A][CRD 3.3.6.2.A]

B. If identified hazards cannot be eliminated or their associated risk adequately reduced through design selection, that risk shall be reduced through the use of fixed, automatic, or other protective safety design features or devices. Provisions shall be made for periodic functional checks of safety devices when applicable.

[MGDS-RD 3.3.6.2.B][CRD 3.3.6.2.B]

C. When neither design nor safety devices can effectively eliminate identified hazards or adequately reduce associated risk, devices shall be used to detect the condition and to produce an adequate warning signal to alert personnel of the hazard. Warning signals and their application shall be designed to minimize the probability of incorrect personnel reaction to the signal and shall be standardized within like types of systems.

[MGDS-RD 3.3.6.2.C][CRD 3.3.6.2.C]

D. Only where it is impractical to eliminate residual hazards through design selection or adequately reduce the associated risk with safety and warning devices, may procedures and training be used as the only protection.

[MGDS-RD 3.3.6.2.D][CRD 3.3.6.2.D]

E. This section imposes requirements from 29 CFR 1910, 29 CFR 1926, and 30 CFR 57.

1. 30 CFR 57 shall apply to subsurface facilities and equipment.

2. 29 CFR 1910 and 29 CFR 1926 shall apply to subsurface facilities and equipment not addressed by 30 CFR 57 and where safety hazard analysis following the precedence in 3.3.6.2.A-D deems it necessary.
[MGDS-RD 3.3.6.2.E][29 CFR 1910; 29 CFR 1926; 30 CFR 57]

3.3.6.3 FACILITIES, EQUIPMENT, AND MATERIALS PROTECTIVE MEASURES

Protection against mechanical, fluid, and toxic hazards shall be in accordance with the requirements of 29 CFR 1910, Subpart H, J, Z and O. MIL-STD-1472D Section 5.13.7 may be used for reference.

[MGDS-RD 3.3.6.3.E][29 CFR 1910, H, O]

3.3.6.4 PERSONNEL PROTECTIVE EQUIPMENT

The Repository Segment will provide such equipment as helmets, face shields, safety shoes, and respiratory protectors.

3.3.6.5 SUBSURFACE PROTECTIVE MEASURES

Safety and health protection systems shall be provided in subsurface spaces as required by 30 CFR 57, 29 CFR 1910, and 29 CFR 1926, as applicable to afford the greatest protection.

[MGDS-RD 3.3.6.5][30 CFR 57]

3.3.6.6 SAFETY LABELS AND PLACARDS

A. Safety labels and placards shall be designed and displayed as required in 29 CFR 1910 Subpart J. MIL-STD-1472D Section 5.13.2 may be used for reference.
[MGDS-RD 3.3.6.6.A][29 CFR 1910, J]

B. Any alerting devices, emergency doors and exits, and equipment provided for use in hazard areas and the environment around surface work spaces shall be designed in accordance with the requirements of 29 CFR 1910 Subpart E. MIL-STD-1472D Section 5.13.4 may be used for reference.
[MGDS-RD 3.3.6.6.C][29 CFR 1910 E]

3.3.6.7 EMERGENCY LIGHTING

Requirements for lighting have been allocated to the Repository Segment.

3.3.6.8 EQUIPMENT RELATED HAZARDS

A. Interlocks, alarms, accesses, hazard accesses, and edge rounding shall be provided and designed in accordance with the applicable requirements of 30 CFR 57 for subsurface equipment, if used. MIL-STD-1472D Section 5.13.5 may be used for reference.
[MGDS-RD 3.3.6.8.A][29 CFR 1910; 30 CFR 57]

B. To protect servicing and maintenance personnel, tag-out and lock out fixtures shall be provided as required by 30 CFR 57.12016 for subsurface machines and equipment.
[MGDS-RD 3.3.6.8.B][29 CFR 1910.147; 30 CFR 57.12016]

3.3.6.9 POSTING REQUIREMENTS

Requirements for signs and other postings as required by law to mark the boundaries of the radiation areas have been allocated to the Repository Segment.

3.3.6.10 WORK PLATFORMS

Requirements for scaffolds, ladders, work platforms, stands and bridges have been allocated to the Repository Segment.

3.3.6.11 ELECTRICAL SAFETY

The Repository Segment has been allocated the requirements for electrical safety.

3.3.7 HUMAN FACTORS ENGINEERING

The design, selection, and integration of equipment, controls, and indicators for remotely operated systems, if used, shall use MIL-STD-1427D Section 5.10 or applicable industry standards as references[3].

[MGDS-RD 3.3.7.11][CRD 3.3.7.11]

3.3.8 METHODS AND CONTROLS

3.3.8.1 MATERIAL MANAGEMENT

A. Materials, parts, and components shall be subject to material management, including the use of heat numbers, part numbers, serial numbers, or other means, either on the item or on records traceable to the item as required, throughout fabrication, installation, and use of the item. The identification and control shall be designated to prevent the use of incorrect or defective materials, parts, and components.

[MGDS-RD 3.3.8.1.A][DOE/RW-0333 P]

B. Materials, parts, or components that do not conform to requirements shall not be used or installed. Controls shall include procedures for identification, documentation, segregation, disposition, and notification to affected organizations. Nonconforming items shall be reviewed and accepted, rejected, repaired, or reworked in accordance with documented procedures.

[MGDS-RD 3.3.8.1.B][CRD 3.3.8.1.B]

C. Measures shall be established to ensure that purchased material, equipment, and services conform to procurement documents.

[MGDS-RD 3.3.8.1.C][CRD 3.3.8.1.C]

D. Current and projected requirements and capabilities in support of the proposed system/equipment design shall make maximum use of standardization in order to ensure reliability and supportability.

[MGDS-RD 3.3.8.1.D][CRD 3.3.8.1.D]

---

[3] For example, the Mining Equipment Manufacturers Group of the American Mining Congress.

3.3.8.2 INVENTORY CONTROL

Requirements for inventory accounting and control systems for nuclear material have been allocated to the Repository Segment.

3.3.9 GOVERNMENT FURNISHED PROPERTY

A. Property to be furnished by the U.S. Government is (TBD).
[MGDS-RD 3.3.9.B][CRD 3.3.9.B]

B. Requirements pertaining to the receipt, maintenance, operation and disposition of Government furnished property are (TBD).
[MGDS-RD 3.3.9.C][CRD 3.3.9.C]

3.3.10 COMPUTER RESOURCES

The Engineered Barrier Segment does not include computers.

3.3.11 ENVIRONMENTAL PROTECTION REQUIREMENTS

To the extent practicable, parts and components of the Engineered Barrier Segment shall mitigate adverse environmental impacts during repository construction, operation, closure, and decommissioning.
[MGDS-RD 3.3.11.B][10 CFR 960.3-4]

3.4 DOCUMENTATION

3.4.1 SPECIFICATIONS

A. All specifications for Engineered Barrier Segment construction and for equipment development and procurement shall be prepared in accordance with the standards of the Construction Specification Institute format, tailored for the application.
[MGDS-RD 3.4.1.B][CRD 3.4.1.A]

B. Implementing documents shall be established to ensure that applicable requirements as specified herein are correctly translated into specifications. These implementing documents must ensure that appropriate quality standards are specified and included in design documents and that deviations from these standards are properly controlled.
[MGDS-RD 3.4.1.C][DOE/RW-0333P]

3.4.2 DRAWINGS

Implementing documents shall be established to ensure that applicable regulatory requirements, design basis requirements, and other requirements as specified herein are correctly translated into drawings. These implementing documents shall ensure that appropriate quality standards are specified and included in design documents and that deviations from these standards are properly controlled. An OCRWM standard for drawings is being developed (TBD) and will be referenced when available.
[MGDS-RD 3.4.2][DOE/RW-0333P]

3.4.3 MAINTENANCE, OPERATORS, AND TECHNICAL MANUALS

Implementing documents shall be established to ensure that applicable requirements as specified herein are correctly translated into maintenance and technical manuals.

[MGDS-RD 3.4.3][DOE/RW-0333P]

3.4.4 TEST PLANS AND PROCEDURES

A test and evaluation program (TBD) shall be established to demonstrate the conformance of the design to system requirements as required in the verification cross reference Table 4-1 and Section 4.4.

[MGDS-RD 3.4.4][CRD 3.4.4]

3.4.5 QUALITY ASSURANCE DOCUMENTATION

QA records shall be prepared, maintained, and stored in accordance with the requirements specified in the OCRWM QARD, or an equivalent OCRWM - approved QA program.

[MGDS-RD 3.4.5][DOE/RW-0333P]

3.4.6 CONSTRUCTION RECORDS

A. Requirements regarding the construction records and record keeping have been allocated to the Repository Segment.

[MGDS-RD 3.4.6.A][CRD 3.4.6.A]

B. Construction records for the Engineered Barrier Segment shall be prepared and maintained in accordance with 10 CFR 60.72(b)(11) and Section 3.4.5 to ensure useability for future generations. The required records include as a minimum, details, methods of emplacement, and location of seals used.

[MGDS-RD 3.4.6.B][10 CFR 60.72(b)(11)]

3.4.7 COMPUTER DOCUMENTATION

Analytical models, computational models, and software user documentation developed for the Engineered Barrier Segment that are considered to be quality affecting shall be prepared in accordance with the OCRWM QARD.

[MGDS-RD 3.4.7][DOE/RW-0333P]

3.4.8 RECORDS MANAGEMENT

Requirements for records management have been allocated to the Repository Segment.

3.5 LOGISTICS

Logistics requirements are established to provide a disciplined, unified, and iterative approach to the development of the support requirements for facilities, systems, and equipment for the Engineered Barrier Segment. The systems, procedures, and measures developed to achieve these requirements will, in turn, ensure the design, readiness, and operational objectives of the Engineered Barrier Segment. Logistics support for the Engineered Barrier Segment will be provided by the Repository Segment.

3.5.1 MAINTENANCE

Structures, systems, and components important to safety shall be designed to permit periodic inspection, testing, and maintenance, as necessary, to ensure their continued functioning and readiness.

[MGDS-RD 3.5.1][10 CFR 60.131(b)(6)]

3.5.1.1 EQUIPMENT MAINTENANCE

3.5.1.1.1 ON-LINE MAINTENANCE

A. The performance of on-line maintenance shall be limited to those actions necessary for safety, to prevent system degradation, and to restore security monitoring. On-line Maintenance consists of remove and replace actions, minor servicing, minor repairs, or repair to items which cannot easily be removed from service for maintenance.

[MGDS-RD 3.5.1.1.1.A]

B. The maintenance shall be equipment-intensive rather than personnel-intensive and shall rely on technology to reduce maintenance requirements.

[MGDS-RD 3.5.1.1.1.B][CRD 3.5.1.1.A]

C. Built-in-test equipment (BITE) shall be used where it is already incorporated into the design of a system or equipment, but existing equipment should not be redesigned to accommodate BITE without specific authorization. Newly designed equipment or systems shall incorporate BITE only where it can be demonstrated to significantly reduce the on-site maintenance workload.

[MGDS-RD 3.5.1.1.1.C][CRD 3.5.1.1.B]

D. Maintenance equipment and tools shall be provided based on the criteria specified by DOE Order 4330.4A, I, 3.5.

[MGDS-RD 3.5.1.1.1.D][DOE Order 4330.4A, I, 3.5]

E. Provisions shall be made for maintenance of underground equipment, if included in the Engineered Barrier Segment, as required by 30 CFR 57 Subpart M.

[MGDS-RD 3.5.1.1.1.E][30 CFR 57, M]

3.5.1.1.2 INTERMEDIATE MAINTENANCE

Intermediate maintenance shall provide failure detection, isolation, and replacement of units which are shop-repairable or vendor-repairable.

[MGDS-RD 3.5.1.1.2.A]

3.5.1.1.3 SALVAGING, OFF-SITE REPAIR, AND VENDOR REPAIR

Items which cannot be repaired at the repository shall be salvaged or returned to an off-site shop or the vendor for repair.

[MGDS-RD 3.5.1.1.3]

3.5.1.2 CALIBRATION MAINTENANCE

Requirements for calibration maintenance have been allocated to the Repository Segment.

3.5.1.3 CASK MAINTENANCE

Cask maintenance requirements have been allocated to the Repository Segment.

3.5.1.4 STANDARDIZATION

A. The Engineered Barrier Segment design shall allow maintenance to be performed, to the extent practical, using standard tools, lubricants, cleaners, test equipment, etc.
[MGDS-RD 3.5.1.4.A][CRD 3.3.8.1.D]

B. The use of special tools and the number of standard tools required shall be minimized by selection of common fasteners, clamps, adapters, and connectors.
[MGDS-RD 3.5.1.4.B][CRD 3.3.8.1.D]

3.5.1.5 SECURITY EQUIPMENT MAINTENANCE

Requirements for security equipment and maintenance have been allocated to the Repository Segment.

3.5.2 SUPPLY

As the maintenance concept influences the design, it also affects the type and quantity of supply support that will be required to support the system. Based on projected logistics support requirements for design considerations, an analysis shall be conducted to assess the capability of support available to the system. The Logistic Support Analysis (LSA) shall be conducted iteratively through all phases of the system or equipment life cycle to satisfy supportability objectives. The level of detail of the analyses and the timing of the task performance shall be tailored to each system and equipment item and shall be responsive to program schedules and milestones. An LSA program in accordance with the MIL-STD-1388-series or the equivalent shall be established for the Engineered Barrier Segment. Supply support for the Engineered Barrier Segment will be provided by the Repository Segment.

[MGDS-RD 3.5.2][CRD 3.5.2]

3.5.3 FACILITIES

3.5.3.1 WAREHOUSE REQUIREMENTS

The Repository Segment will provide warehouse space for the storage of all spare parts, consumable equipment and replaceable equipment in an environment conducive to their safe-keeping and protection.

3.5.4 SUPPORT AND TEST EQUIPMENT

Requirements for support and test equipment (S&TE) shall be determined through the LSA process. Multiple requirements for the same or similar S&TE shall be consolidated to the extent that performance of maintenance actions is not adversely impacted. S&TE requirements are determined for each level of maintenance.

[MGDS-RD 3.5.4][CRD 3.5.4]

3.6 PERSONNEL AND TRAINING

3.6.1 PERSONNEL

A. Operations of systems and components that have been identified as important to safety in the Safety Analysis Report (TBD) and in the License (TBD), shall be performed only by trained and certified personnel or by personnel under the direct visual supervision of an individual with training and certification in such operation.

[MGDS-RD 3.6.1.A][10 CFR 60.160]

B. The physical condition and general health of personnel certified in the operation of equipment and controls that are important to safety must not be such as might cause operational errors that could endanger other in-plant personnel or the public health and safety. Any condition that might cause impaired judgement or motor coordination shall be considered in the selection of personnel for activities that are important to safety.

[MGDS-RD 3.6.1.C][10 CFR 60.162]

3.6.2 TRAINING

Training may be accomplished through a combination of formal structured programs and on-the-job training. Training requirements include both the training of personnel initially assigned to the Engineered Barrier Segment and the training of replacement personnel throughout the system life cycle as required due to attrition. Training shall cover both operator and maintenance tasks. These requirements are included for the impacts on the physical design of the MGDS.

[MGDS-RD 3.6.2][CRD 3.6.2]

3.6.2.1 GENERAL REQUIREMENTS

A. Engineered Barrier Segment equipment maintenance training shall be provided based on the criteria specified by DOE Order 4330.4A, I, 3.1.4.

[MGDS-RD 3.6.2.1.A][DOE Order 4330.4A, I, 3.1.4]

B. A training RD shall be provided to identify requirements for operator and maintenance training for facilities, hardware and software procured or constructed to support the Engineered Barrier Segment. The document shall address the following subjects:

1. The contractor and government responsibility for training shall be defined. This will include the concept of how training will be accomplished (e.g., school, contractor training).

2. Equipment required for training purposes shall be identified.

3. Training devices to be developed, characteristics of the training devices, and training and skills to be developed through the use of training devices shall be identified.

4. Training time and locations available for training shall be identified.

5. Source material and training aids to support the specified training shall be identified.

[MGDS-RD 3.6.2.1.B][CRD 3.6.2.1.A, 3.6.2.1.D]

3.7 ENGINEERED BARRIER SEGMENT MAJOR COMPONENT CHARACTERISTICS/REQUIREMENTS

The major components of the Engineered Barrier Segment are the waste packages, the underground facility, any backfill placed in emplacement drifts, and any emplacement hardware provided to support and protect the emplaced waste package. (The underground facility portion of the Engineered Barrier Segment and the associated requirements allocated to the EB-DRD by the MGDS-RD are identified as interfaces with the Repository Segment in Section 3.2.3.3.) These major components shall be capable of contributing to the assigned function, Isolate Waste (1.4.3), by containing waste in the waste package during the containment period of 300 to 1,000 years (TBR), and then by limiting the release of radionuclides during the post-containment period.

[MGDS-RD 3.7.3.1.A, B][CRD 3.7.4.1.1]

Figure 3-6 depicts the relationship between the components of the waste package (waste form, container, and internal structure) for the drift emplacement concept, one of several concepts now under study.

A. The Engineered Barrier Segment shall be designed to assist the geologic setting in meeting the performance objectives for the period following permanent closure.

[MGDS-RD 3.7.3.2.A][10 CFR 60.133(h)]

B. The Engineered Barrier Segment shall be designed to assure that releases of radioactive materials from the Engineered Barrier Segment, and then through the geologic setting to the accessible environment following permanent closure, conform to applicable environmental standards for radioactivity specified in Section 3.2.2 with respect to both anticipated processes and events and unanticipated processes and events.

[MGDS-RD 3.7.3.2.B][10 CFR 60.112]

C. The Engineered Barrier Segment shall be designed so that assuming anticipated processes and events: (A) containment of HLW will be substantially complete (TBD) during the period when radiation and thermal conditions in the Engineered Barrier Segment are dominated by fission product decay (TBD); and (B) any release of radionuclides from the Engineered Barrier Segment shall be a gradual process which results in small fractional releases (TBD) to the geologic setting over long times.

[Derived][10 CFR 60.113(a)(1)(i)]

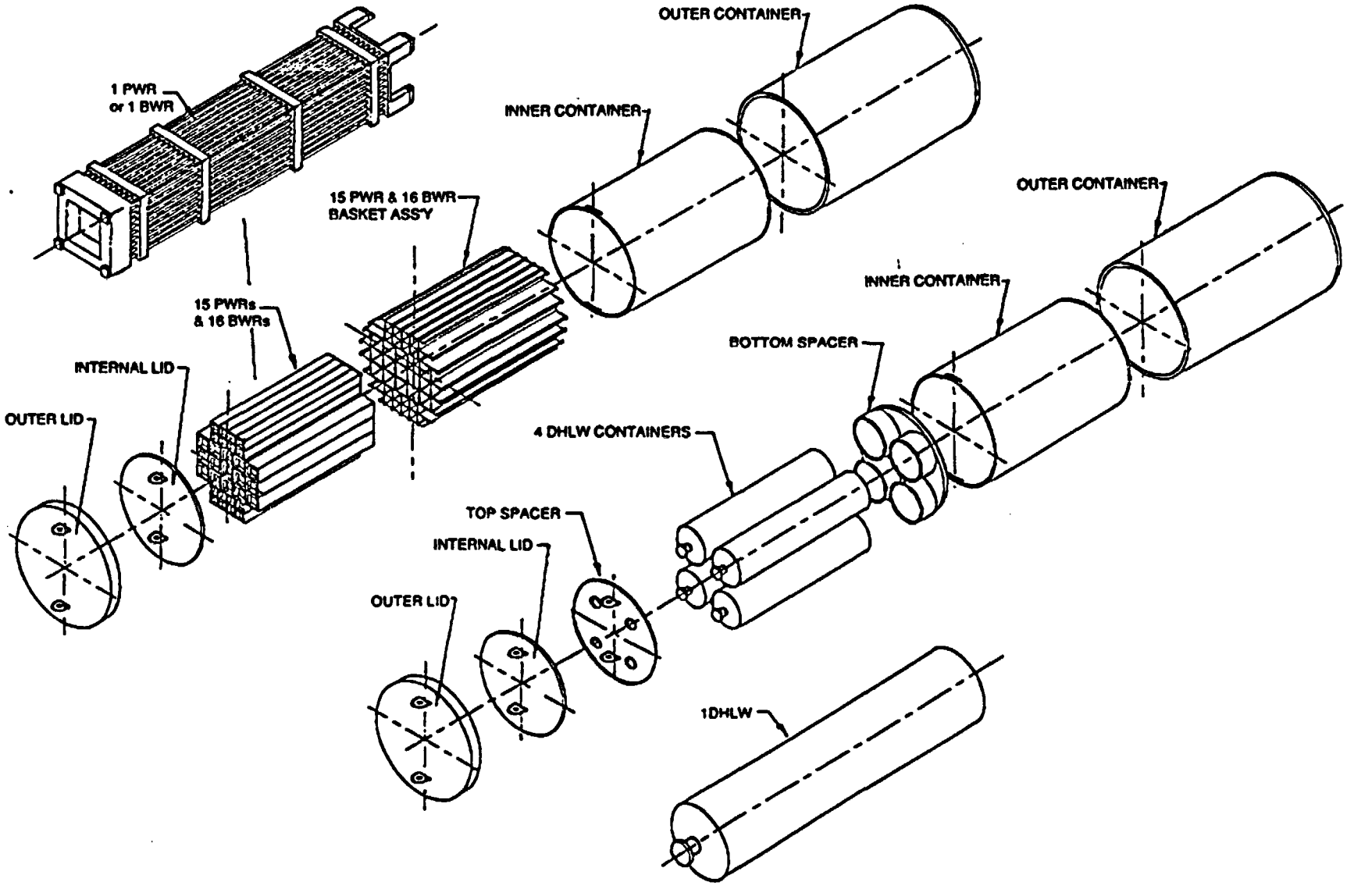

Figure 3-6 Relationship Between the Components of the Waste Package - Drift Emplacement Concept (TBD)

D. The Engineered Barrier Segment shall be designed, assuming anticipated processes and events, so that containment of radioactive material within the waste packages will be substantially complete (TBD) for a period to be determined by the NRC, but not less than 300 years nor more than 1,000 years (TBR) after permanent closure of the geologic repository. NRC Staff Position 60-001 indicates that this is a minimum performance requirement, and that credit can be taken in engineered barrier segment and overall repository system performance assessments for containment, provided by design, in excess of 1000 years.

[MGDS-RD 3.7.3.2.C][10 CFR 60.113(a)(1)(ii)(A)]

E. The Engineered Barrier Segment shall be designed, assuming anticipated processes and events, so that the release rate of any radionuclide from the Engineered Barrier Segment following the containment period shall not exceed 1 part in 100,000 per year of the inventory of that radionuclide calculated to be present at 1,000 years following permanent closure, or such other fraction of the inventory as may be approved or specified by the NRC. This requirement does not apply to any radionuclide which is released at a rate less than 0.1 percent of the calculated total release rate limit. The calculated total release rate limit shall be taken to be 1 part in 100,000 per year of the inventory of radioactive waste, originally emplaced in the underground facility that remains after 1,000 years of radioactive decay.

[MGDS-RD 3.7.3.2.D][10 CFR 60.113(a)(1)(ii)(B)]

F. The Engineered Barrier Segment shall maintain performance under rock-induced loading (TBD).

[Derived]

G. To limit the predicted thermal and thermomechanical response of the host rock and surrounding strata, and groundwater system, the Engineered Barrier Segment configuration and loading shall:

1. Limit borehole wall temperature (if a borehole is used) to 275° C (TBV)

2. Limit the maximum temperature 1 meter into the rock to 200° C (TBV)

3. Limit the TSw3 (vitrophyre tuff) maximum temperature to 115° C (TBV)

4. Limit the maximum ground surface temperature change in the vicinity of the repository to 6° C (TBV)

5. Limit the emplacement drift maximum temperature to 100° C (TBV)

6. Limit the access drift maximum temperature to 50° C (TBV).

[MGDS-RD 3.7.3.4.C][10 CFR 60.133(i)]

3.7.1 WASTE PACKAGE SUBSYSTEM REQUIREMENTS

The waste package consists of the waste form and any containers, shielding, packaging, and other absorbent materials immediately surrounding an individual waste container.

A. Packages for SNF and HLW shall be designed so that the in situ chemical, physical, and nuclear properties of the waste package and its interactions with the emplacement environment do not compromise the function of the waste packages or the performance of the underground facility or the geologic setting.

[MGDS-RD 3.7.3.3.A][10 CFR 60.135(a)(1)]

B. The design of waste packages shall include, but not be limited to, consideration of the following factors: solubility, oxidation/reduction reactions, corrosion, hydriding, gas generation, thermal effects, mechanical strength, mechanical stress, radiolysis, radiation damage, radionuclide retardation, leaching, fire and explosion hazards, thermal loads, and synergistic interactions.

[MGDS-RD 3.7.3.3.B][10 CFR 60.135(a)(2)]

C. The waste packages shall not contain explosive or pyrophoric materials or chemically reactive materials in an amount that could compromise the ability of the underground facility to contribute to waste isolation or the ability of the geologic repository to satisfy the performance objectives.

[MGDS-RD 3.7.3.3.C][10 CFR 60.135(b)(1)]

D. The waste package shall not contain free liquids in an amount that could compromise the ability of the waste package to achieve the performance objectives relating to containment of radioactive waste (because of chemical interactions or formation of pressurized vapor) or that could result in spillage and spread of contamination in the event of waste package perforation during the period through permanent closure.

[MGDS-RD 3.7.3.3.D][10 CFR 60.135(b)(2)]

E. Waste packages shall be designed to maintain waste containment during transportation, emplacement, and retrieval.

[MGDS-RD 3.7.3.3.E][10 CFR 60.135(b)(3)]

F. A label or other means of identification shall be provided for each waste package. The identification shall not impair the integrity of the waste package, shall not damage the waste package and shall be applied in such a way that the information shall be legible at least to the end of the period of retrievability. Each waste package's identification shall be consistent with the waste package's permanent written records. The information on the label shall be (TBD).

[MGDS-RD 3.7.3.3.F][10 CFR 60.135(b)(4)]

G. Processes specified for the fabrication, assembly, closure, and inspection of waste packages shall be based on technology reasonably available at the time of final design. These processes need not be reduced to commercial practice in all applicable details and shall not require significant extensions of the technology.

[Derived]

H. The waste package shall contribute to limiting the dispersal of radioactive waste materials in the event of accidents or other dynamic effects.

[Derived]

I. Containment of radioactive material within the waste packages shall be substantially complete (TBD) for a period of years (TBD) after permanent closure of the geologic repository.

[MGDS-RD 3.7.3.2.C][10 CFR 60.113(a)(1)(ii)(A)]

J. The waste package shall meet the following criteria:

1. External dimensions shall be (TBD), with a tolerance of (TBD).

2. Weight shall not exceed (TBD).

3. Surface finish shall be (TBD).

[Derived]

K. The waste package shall be transportable, emplaceable, and retrievable by the repository equipment.

[Derived]

3.7.1.1 WASTE FORM REQUIREMENTS

SNF and HLW that is emplaced in the underground facility shall meet the following criteria:

A. All such radioactive wastes shall be in solid form.

[MGDS-RD 3.7.3.3.G.1][10 CFR 60.135(c)(1)]

B. Radioactive waste shall be placed in sealed containers.

[MGDS-RD 3.7.3.3.G.2][10 CFR 60.135(c)(1)]

C. Particulate waste forms shall be consolidated (for example, by incorporation into an encapsulated matrix) to limit the availability and generation of particulates.

[MGDS-RD 3.7.3.3.G.3][10 CFR 60.135(c)(2)]

D. All combustible radioactive wastes shall be reduced to a noncombustible form unless it can be demonstrated that a fire involving the waste packages containing combustibles will not compromise the integrity of other waste packages, adversely affect any structures, systems, or components important to safety, or compromise the ability of the underground facility to contribute to waste isolation.

[MGDS-RD 3.7.3.3.G.4][10 CFR 60.135(c)(3)]

E. The waste form shall be capable of sustaining normal handling and packaging operational loads without impairing the waste packages's ability to prevent loss of containment.

[Derived]

F. The canistered waste form shall be capable of withstanding a drop of (TBD) onto a flat, essentially unyielding surface without breaching.

[Derived]

G. Seismic loads (TBD) shall not decrease the postclosure performance of the waste form.

[Derived]

H. The waste form shall remain solid during handling, emplacement, and retrieval modes.

[Derived]

3.7.1.2 WASTE CONTAINER REQUIREMENTS

A. The container shall contain the radioactive waste materials during all normal handling and emplacement operations and, in the event of accidents or other dynamic effects, contribute to limiting dispersal of the waste. The container shall also have the mechanical integrity to sustain routine handling and transportation loads (TBD).

[Derived]

B. The container shall contribute to the waste package such that containment of the enclosed radionuclides is substantially complete (TBD) during the containment period of not less than 300 to 1,000 years (TBR) after permanent closure of the geologic repository.

[MGDS-RD 3.7.3.2.C][10 CFR 60.113(a)(1)(ii)(A)]

C. The container shall contribute (TBD) to controlling the release of radionuclides during the period of isolation.

[Derived][10 CFR 60.135(a)(1)]

D. The container shall be designed to limit the amount of liquid water (TBD) allowed to contact the enclosed waste form.

[Derived]

E. The container shall provide a means of unique identification which shall be a label documenting the process history of the container's contents and shall be attached to the body and lid of the container. The information on the label shall be (TBD).

[MGDS-RD 3.7.3.3.F][10 CFR 60.135(b)(4)]

F. The container shall maintain lifting and handling capabilities through the loading, emplacement, and retrieval phases.

1. All of the emplaced containers shall remain intact (TBV) and have sufficient strength through the period of retrievability so that the waste package may be removed.

2. The handling and lifting fixtures on all (TBV) of the containers shall maintain their performance to the end of the period of retrievability.

[Derived]

G. The container shall be designed so that neither its in situ chemical, physical and nuclear properties, nor its interactions with the waste form and the emplacement environment, compromise the function of the waste package or the performance of the natural barriers or engineered barriers.

[MGDS-RD 3.7.3.3.A][10 CFR 60.135(a)(1)]

H. The container shall be designed to meet the following criteria:

1. The surface finish shall be suitable for ease of decontamination.

2. The maximum weight shall be (TBD).

3. The envelope shall be (TBD).

4. The acceptance criteria for weld flaws is (TBD).

[Derived]

I. The container shall be designed for ease of attaching and sealing the lid to the body of the container after the waste forms are installed.

[Derived]

J. If the design requires an inert gas barrier, the container shall be filled with the inert gas (e.g., Ar-He mixture) before final closure. The inert gas shall meet requirements (TBD) pertaining to such issues as fill temperature and pressure, gas purity and closure tightness. Inspection and test requirements shall be (TBD).

[Derived]

3.7.1.3 INTERNAL STRUCTURE REQUIREMENTS

A. The internal structure shall provide separation of the waste forms such that nuclear criticality shall not be possible unless at least two unlikely, independent, and concurrent or sequential changes have occurred in the conditions essential to nuclear criticality safety. The calculated effective multiplication factor (k_{eff}) must be sufficiently below unity to show at least a five percent margin after allowance for the bias in the method of calculation and the uncertainty in the experiments used to validate the method of calculation (TBD).

[MGDS-RD 3.2.2.6.A][10 CFR 60.131(b)(7)]

B. The internal structure of the waste package shall be configured to accommodate the spent fuel waste form, provide mechanical stability of the waste form, and facilitate loading of the waste form into the waste package.

[Derived]

C. The internal structure(s) shall be designed to accommodate each configuration of the canisterized and uncanisterized SNF waste form and the canisterized HLW form.

[Derived]

D. The internal structure shall be capable of withstanding handling, emplacement, and retrieval loads (TBD).

[Derived]

E. The internal structure shall not degrade the performance of components in the waste package which have long term containment requirements.

[Derived]

F. The material used for the internal structure shall not cause adverse galvanic reactions inside the waste package.

[Derived]

G. The internal structure shall maintain functionality under the thermal and chemical conditions generated by the waste form.

[Derived]

3.7.1.4 ADDITIONAL CONTAINERS, PACKING, SHIELDING, AND ABSORBING MATERIALS REQUIREMENTS

Specific allocations of requirements to any containers, packing, shielding, and other absorbent materials immediately surrounding an individual waste container will result from trade studies and engineering analyses performed during ACD. (TBD)

3.7.2 BACKFILL REQUIREMENTS

The requirements for backfill (if needed) are provided in this section for backfill placed in the waste emplacement drifts. This backfill may be used to retard the migration of radionuclides from the waste package to the geologic setting and/or for structural support of the emplacement drifts. It may also be placed in peaked layers to provide a barrier which prevents water from contacting the waste package.

The requirements for backfill placed in other underground openings in the repository are addressed in the Repository Design Requirements Document.

A. Backfill material shall be chemically compatible with waste package containment and not impair its capability.

[Derived]

B. The backfill shall have a permeability of (TBD).

[Derived]

C. The transfer of heat from the waste package to the geologic setting by the backfill material shall not have an adverse effect on the long term performance of the WP.

[Derived]

D. As a design goal, the backfill material shall retard, but not contribute to radionuclide migration.

[Derived]

E. The backfill emplacement operation shall not impair the long term performance of the waste package.

[Derived]

F. The chemical and mechanical stability of the backfill when subjected to the maximum thermal environment anticipated in the repository shall not have an adverse effect on the long term performance of the waste package.

[Derived]

3.7.3 EMPLACEMENT HARDWARE REQUIREMENTS

The emplacement hardware requirements (TBD) are for hardware used to support and protect the emplaced waste packages. Examples of emplacement hardware are a pedestal under the waste package for the in-drift emplacement concept and a carriage and rail system for the horizontal opening concept. Emplacement hardware does not include ground support hardware which is part of the Repository Segment. Emplacement hardware requirements will be added during and after ACD.

3.8 PRECEDENCE

A. The general order of precedence for Engineered Barrier Segment requirements is:

1. Federal Law
   a. Statutes and Treaties
   b. Regulations and Executive Orders
   c. Other (e.g., DOE Orders)

2. State Law and Tribal Law
3. Local Ordinances
4. National and International Standards

[MGDS-RD 3.8.A][CRD 3.8]

B. The NRC requirements shall take precedence when resolving questions of precedence involving DOE orders or parts of the CFR issued by DOE. There are no nuclear safety design-related requirements in DOE Order 5480.11 applicable to the Engineered Barrier Segment, however.

[MGDS-RD 3.8.B][MOA on Nuclear Safety Requirements 4-16-92]

3.9 QUALIFICATION/QUALITY ASSURANCE

The applicable QA controls established by the OCRWM QARD shall be applied to quality affecting items and their associated activities based on the classification of the structure, system, or component.

[MGDS-RD 3.9][DOE/RW-0333P]

4. CONFORMANCE VERIFICATION

4.1 GENERAL

This section relates the requirements of this document to the compliance methods of Section 4.2 that will be used to verify compliance with the requirements. The test and evaluation program and the conformance verification activities are not intended to replace activities associated with NRC license application or the satisfaction of that License.

4.2 METHODS

Verification of the Engineered Barrier Segment components shall be performed on Engineered Barrier Segment components that are representative of the approved production design. Verification of the Engineered Barrier Segment to assure compliance with the requirements of Section 3 shall be by analysis, examination, test, or demonstration which shall be defined as follows:

A. **Analysis.** Analysis is the process needed to verify a requirement by rational thinking, tradeoff studies, modeling, and processing test data and accumulated results to reach a conclusion. Analysis involves the processing of accumulated results and conclusions, intended to provide proof that verification of a requirement has been accomplished. The analytical results may include a compilation or interpretation of existing information or derived from lower level examinations, tests, demonstrations, or analyses.

   Example: Verifying compliance with the substantially complete containment requirement will require integration of the results of multiple studies involving models, test data, and other information.

B. **Examination.** Examination is the process of investigating a product to verify that required features are incorporated. Examination consists of investigation, without the use of special laboratory appliances, procedures, supplies, or services, to determine conformance to those specified requirements which can be determined by such investigations. Examination is generally nondestructive and includes, but is not limited to, visual and other investigations; simple physical manipulation; gauging; and measurement.

   Example: Visual inspection of a road to verify that drainage ditches and culverts are present.

C. **Test.** Test is the quantitative process whereby data is collected over a specified time period, under controlled conditions, in order to document the as-built performance of a product. A test denotes the determination of the properties or elements of items (or components thereof) by technical means, including functional operation, the application of established principles and procedures, and the collection of quantitative data. The analysis of data derived from testing is an integral part of the method.

   Example: Measurements to verify radiologic shielding effects.

D. **Demonstration.** Demonstration is the qualitative process of exercising a product to verify its operability, where data may or may not be collected. Demonstration differs from test by directness of approach in the verification of a requirement and is accomplished without the use of instrumentation or special equipment. Thus, operation of a representative item in or near its use environment would be defined as a demonstration rather than a test. Demonstration attempts to verify, qualitatively, the performance of a function, whereas test involves verifying performance within a specific range of measurement.

Example: Deliberate cut-off of an electric power source to verify automatic operation of emergency lighting.

4.3 CROSS REFERENCE

In Table 4-1, the requirements of Section 3 are correlated with the appropriate inspection method to be used to verify compliance. Documentation of conformance will be accomplished through the use of detailed procedures to be developed and performed on all procured, constructed, and developed equipment, structures, and software.

4.4 VERIFICATION

Documentation of compliance will be accomplished through the use of detailed verification procedures developed in accordance with direction provided in test and evaluation plans. These procedures will be developed and performed on all procured, constructed, and developed equipment, structures, and software, The plans will address: test program documentation; definition of developmental, acceptance, and operational testing; identification of test sites and resources; test philosophy; division of test responsibilities; and general test management, The plans will be implemented through individual test plans, test planning analysis, and test procedures.

Note: In Table 4-1, items marked "N/A" (not applicable) have no verification required. These items are titles or contain explanatory materials. The other columns "Analysis", "Exam", "Test", and "Demo" refer to the verification methods identified in Section 4.2.

Table 4-1 Conformance Verification Matrix (TBV)

Requirement		Verification Method Code				
Number	Title	N/A	Analysis	Exam	Demo	Test
3.2	Characteristics	X				
3.2.1	Performance Characteristics	X				
3.2.1.A	Performance Characteristics		X			
3.2.1.B	Performance Characteristics	X				
3.2.1.1	Construction Mode Requirements			X		
3.2.1.2	Emplacement Mode Requirements	X				
3.2.1.2.A	Emplacement Mode Requirements			X		
3.2.1.2.B	Emplacement Mode Requirements		X			
3.2.1.2.C	Emplacement Mode Requirements		X			
3.2.1.3	Caretaker Mode Requirements		X			
3.2.1.4	Retrieval Mode Requirements	X				
3.2.1.4.A	Retrieval Mode Requirements			X		
3.2.1.4.B	Retrieval Mode Requirements		X	X		
3.2.1.4.C	Retrieval Mode Requirements		X			
3.2.1.5	Closure and Decommissioning Mode Requirements		X			
3.2.1.6	Post-Closure Mode Requirements	X				
3.2.1.6.A	Post-Closure Mode Requirements		X			
3.2.1.6.B	Post-Closure Mode Requirements		X			
3.2.1.7	Off-Normal Mode Requirements	X				
3.2.1.7.A	Off-Normal Mode Requirements		X			
3.2.1.7.B	Off-Normal Mode Requirements		X			
3.2.2	Radiological Protection	X				
3.2.2.1	General Requirements	X				
3.2.2.1.A	General Requirements		X	X		
3.2.2.1.B	General Requirements		X			
3.2.2.1.C	General Requirements		X			
3.2.2.1.D	General Requirements		X			

Table 4-1 Conformance Verification Matrix (TBV) (continued)

Requirement		Verification Method Code				
Number	Title	N/A	Analysis	Exam	Demo	Test
3.2.2.2	Personnel Protection	X				
3.2.2.3	Public Protection	X				
3.2.2.3.A	Public Protection		X			
3.2.2.3.B	Public Protection		X			
3.2.2.3.C	Public Protection		X			
3.2.2.4	Airborne Radioactive Material Control		X			
3.2.2.5	Radiation Monitoring	X				
3.2.2.6	Criticality Protection	X				
3.2.2.6.A	Criticality Protection		X			
3.2.2.6.B	Criticality Protection		X			
3.2.2.7	Low Level Waste Disposal	X				
3.2.2.8	Transportation Protection	X				
3.2.3	Interface Requirements	X				
3.2.3.1	Engineered Barrier Segment - Geologic Setting Interface Requirements	X				
3.2.3.1.A	Engineered Barrier Segment - Geologic Setting Interface Requirements	X				
3.2.3.1.A.1	Engineered Barrier Segment - Geologic Setting Interface Requirements		X			
3.2.3.1.A.2	Engineered Barrier Segment - Geologic Setting Interface Requirements		X			
3.2.3.1.A.3	Engineered Barrier Segment - Geologic Setting Interface Requirements		X			
3.2.3.1.A.4	Engineered Barrier Segment - Geologic Setting Interface Requirements		X	X		
3.2.3.1.A.5	Engineered Barrier Segment - Geologic Setting Interface Requirements		X			
3.2.3.1.B	Engineered Barrier Segment - Geologic Setting Interface Requirements	X				
3.2.3.2	Engineered Barrier Segment - Site Segment Interface Requirements	X				

Table 4-1 Conformance Verification Matrix (TBV) (continued)

Requirement		Verification Method Code				
Number	Title	N/A	Analysis	Exam	Demo	Test
3.2.3.3	Engineered Barrier Segment - Repository Segment Interface Requirements	X				
3.2.3.3.A	Engineered Barrier Segment - Repository Segment Interface Requirements	X				
3.2.3.3.A.1	Engineered Barrier Segment - Repository Segment Interface Requirements	X				
3.2.3.3.A.2	Engineered Barrier Segment - Repository Segment Interface Requirements	X				
3.2.3.3.A.3	Engineered Barrier Segment - Repository Segment Interface Requirements	X				
3.2.3.3.A.4	Engineered Barrier Segment - Repository Segment Interface Requirements	X				
3.2.3.3.A.5	Engineered Barrier Segment - Repository Segment Interface Requirements	X				
3.2.3.3.A.6	Engineered Barrier Segment - Repository Segment Interface Requirements	X				
3.2.3.3.A.7	Engineered Barrier Segment - Repository Segment Interface Requirements	X				
3.2.3.3.A.8	Engineered Barrier Segment - Repository Segment Interface Requirements	X				
3.2.3.3.A.8.a	Engineered Barrier Segment - Repository Segment Interface Requirements	X				
3.2.3.3.A.8.b	Engineered Barrier Segment - Repository Segment Interface Requirements	X				
3.2.3.3.A.8.c	Engineered Barrier Segment - Repository Segment Interface Requirements	X				
3.2.3.3.A.8.d	Engineered Barrier Segment - Repository Segment Interface Requirements	X				
3.2.3.3.A.9	Engineered Barrier Segment - Repository Segment Interface Requirements	X				
3.2.3.3.A.10	Engineered Barrier Segment - Repository Segment Interface Requirements	X				
3.2.3.3.A.10.a	Engineered Barrier Segment - Repository Segment Interface Requirements	X				

Table 4-1 Conformance Verification Matrix (TBV) (continued)

Requirement		Verification Method Code				
Number	Title	N/A	Analysis	Exam	Demo	Test
3.2.3.3.A.10.b	Engineered Barrier Segment - Repository Segment Interface Requirements	X				
3.2.3.3.A.10.c	Engineered Barrier Segment - Repository Segment Interface Requirements	X				
3.2.3.3.A.11	Engineered Barrier Segment - Repository Segment Interface Requirements	X				
3.2.3.3.A.12	Engineered Barrier Segment - Repository Segment Interface Requirements	X				
3.2.3.3.A.12.a	Engineered Barrier Segment - Repository Segment Interface Requirements	X				
3.2.3.3.A.12.b	Engineered Barrier Segment - Repository Segment Interface Requirements	X				
3.2.3.3.A.12.c	Engineered Barrier Segment - Repository Segment Interface Requirements	X				
3.2.3.3.A.12.d	Engineered Barrier Segment - Repository Segment Interface Requirements	X				
3.2.3.3.A.12.e	Engineered Barrier Segment - Repository Segment Interface Requirements	X				
3.2.3.3.A.12.f	Engineered Barrier Segment - Repository Segment Interface Requirements	X				
3.2.3.3.A.13	Engineered Barrier Segment - Repository Segment Interface Requirements	X				
3.2.3.3.A.14	Engineered Barrier Segment - Repository Segment Interface Requirements	X				
3.2.3.3.A.14.a	Engineered Barrier Segment - Repository Segment Interface Requirements	X				
3.2.3.3.A.14.b	Engineered Barrier Segment - Repository Segment Interface Requirements	X				
3.2.3.3.A.15	Engineered Barrier Segment - Repository Segment Interface Requirements	X				
3.2.3.3.A.15.a	Engineered Barrier Segment - Repository Segment Interface Requirements	X				
3.2.3.3.A.15.b	Engineered Barrier Segment - Repository Segment Interface Requirements	X				

Table 4-1 Conformance Verification Matrix (TBV) (continued)

Requirement		Verification Method Code				
Number	Title	N/A	Analysis	Exam	Demo	Test
3.2.3.3.A.15.c	Engineered Barrier Segment - Repository Segment Interface Requirements	X				
3.2.3.3.A.16	Engineered Barrier Segment - Repository Segment Interface Requirements	X				
3.2.3.3.A.16.a	Engineered Barrier Segment - Repository Segment Interface Requirements	X				
3.2.3.3.A.16.b	Engineered Barrier Segment - Repository Segment Interface Requirements	X				
3.2.3.3.A.16.c	Engineered Barrier Segment - Repository Segment Interface Requirements	X				
3.2.3.3.A.17	Engineered Barrier Segment - Repository Segment Interface Requirements	X				
3.2.3.3.B	Engineered Barrier Segment - Repository Segment Interface Requirements	X				
3.2.3.3.B.1	Engineered Barrier Segment - Repository Segment Interface Requirements		X			
3.2.3.3.B.1.a	Engineered Barrier Segment - Repository Segment Interface Requirements		X			
3.2.3.3.B.1.b	Engineered Barrier Segment - Repository Segment Interface Requirements		X			
3.2.3.3.B.1.c	Engineered Barrier Segment - Repository Segment Interface Requirements		X			
3.2.3.3.B.2	Engineered Barrier Segment - Repository Segment Interface Requirements		X			
3.2.3.3.B.2.a	Engineered Barrier Segment - Repository Segment Interface Requirements		X			
3.2.3.3.B.2.b	Engineered Barrier Segment - Repository Segment Interface Requirements		X			
3.2.3.3.B.3	Engineered Barrier Segment - Repository Segment Interface Requirements		X			
3.2.3.3.B.4	Engineered Barrier Segment - Repository Segment Interface Requirements					X
3.2.3.3.B.5	Engineered Barrier Segment - Repository Segment Interface Requirements	X				

Table 4-1 Conformance Verification Matrix (TBV) (continued)

Requirement		Verification Method Code				
Number	Title	N/A	Analysis	Exam	Demo	Test
3.2.3.3.B.5.a	Engineered Barrier Segment - Repository Segment Interface Requirements		X			
3.2.3.3.B.5.b	Engineered Barrier Segment - Repository Segment Interface Requirements		X			
3.2.3.3.B.6	Engineered Barrier Segment - Repository Segment Interface Requirements		X			
3.2.3.3.B.7	Engineered Barrier Segment - Repository Segment Interface Requirements	X				
3.2.3.4	Engineered Barrier Segment - Waste Acceptance Interfaces	X				
3.2.3.4.A	Engineered Barrier Segment - Waste Acceptance Interfaces	X				
3.2.3.4.A.1	Engineered Barrier Segment - Waste Acceptance Interfaces	X				
3.2.3.4.A.1.a	Engineered Barrier Segment - Waste Acceptance Interfaces	X				
3.2.3.4.A.1.b	Engineered Barrier Segment - Waste Acceptance Interfaces	X				
3.2.3.4.A.1.c	Engineered Barrier Segment - Waste Acceptance Interfaces	X				
3.2.3.4.A.1.d	Engineered Barrier Segment - Waste Acceptance Interfaces	X				
3.2.3.4.A.1.e	Engineered Barrier Segment - Waste Acceptance Interfaces	X				
3.2.3.4.A.1.f	Engineered Barrier Segment - Waste Acceptance Interfaces	X				
3.2.3.4.A.2	Engineered Barrier Segment - Waste Acceptance Interfaces	X				
3.2.3.4.A.3	Engineered Barrier Segment - Waste Acceptance Interfaces	X				
3.2.3.4.A.4	Engineered Barrier Segment - Waste Acceptance Interfaces	X				
3.2.3.4.A.5	Engineered Barrier Segment - Waste Acceptance Interfaces	X				

Table 4-1 Conformance Verification Matrix (TBV) (continued)

Requirement		Verification Method Code				
Number	Title	N/A	Analysis	Exam	Demo	Test
3.2.3.4.B	Engineered Barrier Segment - Waste Acceptance Interfaces	X				
3.2.3.4.C	Engineered Barrier Segment - Waste Acceptance Interfaces	X				
3.2.3.4.C.1	Engineered Barrier Segment - Waste Acceptance Interfaces	X				
3.2.3.4.C.1.a	Engineered Barrier Segment - Waste Acceptance Interfaces	X				
3.2.3.4.C.1.b	Engineered Barrier Segment - Waste Acceptance Interfaces	X				
3.2.3.4.C.1.c	Engineered Barrier Segment - Waste Acceptance Interfaces	X				
3.2.3.4.C.1.d	Engineered Barrier Segment - Waste Acceptance Interfaces	X				
3.2.3.4.C.1.e	Engineered Barrier Segment - Waste Acceptance Interfaces	X				
3.2.3.4.C.1.f	Engineered Barrier Segment - Waste Acceptance Interfaces	X				
3.2.3.4.C.1.g	Engineered Barrier Segment - Waste Acceptance Interfaces	X				
3.2.3.4.C.2	Engineered Barrier Segment - Waste Acceptance Interfaces	X				
3.2.3.4.C.3	Engineered Barrier Segment - Waste Acceptance Interfaces	X				
3.2.3.4.C.4	Engineered Barrier Segment - Waste Acceptance Interfaces	X				
3.2.3.4.C.5	Engineered Barrier Segment - Waste Acceptance Interfaces	X				
3.2.3.4.D	Engineered Barrier Segment - Waste Acceptance Interfaces	X				
3.2.3.4.E	Engineered Barrier Segment - Waste Acceptance Interfaces	X				
3.2.3.5	Engineered Barrier Segment - Transportation Interfaces	X				
3.2.4	Physical Characteristics			X		

Table 4-1 Conformance Verification Matrix (TBV) (continued)

Requirement		Verification Method Code				
Number	Title	N/A	Analysis	Exam	Demo	Test
3.2.4.1	Protective Coatings and Materials		X			
3.2.4.2	Habitability	X				
3.2.4.3	Security	X				
3.2.4.4	Radioactive Materials Monitoring	X				
3.2.4.5	Shielding	X				
3.2.4.6	Design Basis Events	X				
3.2.4.6.A	Design Basis Events		X			
3.2.4.6.B	Design Basis Events		X	X		
3.2.5	System Quality Factors	X				
3.2.5.1	Reliability		X			
3.2.5.1.1	Reliability Program Requirements			X		
3.2.5.1.2	Reliability of Equipment	X				
3.2.5.1.2.A	Reliability of Equipment		X			
3.2.5.1.2.B	Reliability of Equipment		X			
3.2.5.1.2.B.1	Reliability of Equipment		X			
3.2.5.1.2.B.1.a	Reliability of Equipment		X			
3.2.5.1.2.B.1.b	Reliability of Equipment		X			
3.2.5.1.2.B.1.c	Reliability of Equipment		X			
3.2.5.1.2.B.1.d	Reliability of Equipment		X			
3.2.5.1.2.B.2	Reliability of Equipment		X			
3.2.5.1.2.B.3	Reliability of Equipment		X			
3.2.5.1.3	Structure, System, and Component Reliability		X			
3.2.5.1.4	Utilities Reliability	X				
3.2.5.1.5	System Throughput		X			
3.2.5.2	Maintainability/Inspectability	X				
3.2.5.2.1	Testing and Maintenance		X			
3.2.5.2.2	Physical Clearance	X				
3.2.5.2.3	Mean Time to Repair			X		

Table 4-1 Conformance Verification Matrix (TBV) (continued)

Requirement		Verification Method Code				
Number	Title	N/A	Analysis	Exam	Demo	Test
3.2.5.2.4	Replacement Equipment	X				
3.2.5.2.4.A	Replacement Equipment		X			
3.2.5.2.4.B	Replacement Equipment		X			
3.2.5.2.4.C	Replacement Equipment		X			
3.2.5.2.5	Fault Isolation		X	X		
3.2.5.2.6	Maintenance in Radioactive Environments		X			
3.2.5.2.7	Important to Safety Equipment		X			
3.2.5.2.8	Design for Maintainability	X				
3.2.5.2.8.A	Design for Maintainability		X	X		
3.2.5.2.8.A.1	Design for Maintainability			X		
3.2.5.2.8.A.2	Design for Maintainability				X	
3.2.5.2.8.A.3	Design for Maintainability				X	
3.2.5.2.8.A.4	Design for Maintainability			X		
3.2.5.2.8.A.5	Design for Maintainability		X			
3.2.5.2.8.B	Design for Maintainability		X			
3.2.5.2.8.C	Design for Maintainability		X			
3.2.5.2.8.D	Design for Maintainability		X			
3.2.5.2.8.E	Design for Maintainability		X			
3.2.5.2.9	Mean Downtime		X	X		
3.2.5.3	Availability	X				
3.2.5.3.A	Availability			X		
3.2.5.3.B	Availability			X		
3.2.5.4	Service Life			X		
3.2.5.5	Overall Utilization	X				
3.2.5.5.A	Overall Utilization				X	
3.2.5.5.B	Overall Utilization		X			
3.2.6	Environmental Requirements	X				
3.2.6.1	Natural Environment	X				

Table 4-1 Conformance Verification Matrix (TBV) (continued)

Requirement		Verification Method Code				
Number	Title	N/A	Analysis	Exam	Demo	Test
3.2.6.1.A	Natural Environment		X			
3.2.6.1.B	Natural Environment		X			
3.2.6.1.C	Natural Environment		X			
3.2.6.1.D	Natural Environment		X			
3.2.6.2	Induced Environment	X				
3.2.6.2.1	Fire, Explosion, and Other Disaster Protection		X			
3.2.6.2.2	Fire Resistance		X			
3.2.6.2.3	Vibration		X	X		
3.2.6.2.4	Creep and Shrinkage		X	X		
3.2.6.2.5	Underground Openings	X				
3.2.7	Transportability/Modularity			X		
3.2.8	Flexibility, Expansion, and Integration		X			
3.2.9	Portability and Load Carrying		X			
3.3	Design and Construction	X				
3.3.1	General Design Criteria	X				
3.3.1.A	General Design Criteria		X			
3.3.1.B	General Design Criteria		X			
3.3.1.C	General Design Criteria		X			
3.3.1.D	General Design Criteria		X			
3.3.1.E	General Design Criteria		X			
3.3.1.F	General Design Criteria		X			
3.3.1.G	General Design Criteria		X			
3.3.1.H	General Design Criteria		X			
3.3.1.I	General Design Criteria		X			
3.3.2	Electromagnetic Radiation	X				
3.3.3	Nameplates and Markings	X				
3.3.3.A	Nameplates and Markings		X			
3.3.3.B	Nameplates and Markings		X			

Table 4-1 Conformance Verification Matrix (TBV) (continued)

Requirement		Verification Method Code				
Number	Title	N/A	Analysis	Exam	Demo	Test
3.3.3.C	Nameplates and Markings		X			
3.3.3.D	Nameplates and Markings		X			
3.3.3.E	Nameplates and Markings		X			
3.3.3.F	Nameplates and Markings		X			
3.3.4	Workmanship	X				
3.3.4.A	Workmanship		X			
3.3.4.B	Workmanship		X			
3.3.5	Interchangeability		X			
3.3.6	Safety	X				
3.3.6.1	General Requirements	X				
3.3.6.1.A	General Requirements		X			
3.3.6.1.B	General Requirements		X			
3.3.6.2	System Safety Precedence	X				
3.3.6.2.A	System Safety Precedence		X			
3.3.6.2.B	System Safety Precedence		X			
3.3.6.2.C	System Safety Precedence		X			
3.3.6.2.D	System Safety Precedence		X			
3.3.6.2.E	System Safety Precedence	X				
3.3.6.2.E.1	System Safety Precedence		X			
3.3.6.2.E.2	System Safety Precedence		X			
3.3.6.3	Facilities, Equipment, and Materials Protective Measures		X			
3.3.6.4	Personnel Protective Equipment	X				
3.3.6.5	Subsurface Protective Measures		X			
3.3.6.6	Safety Labels and Placards	X				
3.3.6.6.A	Safety Labels and Placards		X			
3.3.6.6.B	Safety Labels and Placards		X			
3.3.6.7	Emergency Lighting	X				
3.3.6.8	Equipment Related Hazards	X				

Table 4-1 Conformance Verification Matrix (TBV) (continued)

Requirement		Verification Method Code				
Number	Title	N/A	Analysis	Exam	Demo	Test
3.3.6.8.A	Equipment Related Hazards		X			
3.3.6.8.B	Equipment Related Hazards		X			
3.3.6.9	Posting Requirements	X				
3.3.6.10	Work Platforms	X				
3.3.6.11	Electrical Safety	X				
3.3.7	Human Factors Engineering		X			
3.3.8	Methods and Controls	X				
3.3.8.1	Material Management	X				
3.3.8.1.A	Material Management		X			
3.3.8.1.B	Material Management		X			
3.3.8.1.C	Material Management		X			
3.3.8.1.D	Material Management		X			
3.3.8.2	Inventory Control	X				
3.3.9	Government Furnished Property	X				
3.3.9.A	Government Furnished Property	X				
3.3.9.B	Government Furnished Property		X			
3.3.10	Computer Resources	X				
3.3.11	Environmental Protection Requirements		X			
3.4	Documentation	X				
3.4.1	Specifications	X				
3.4.1.A	Specifications		X			
3.4.1.B	Specifications		X			
3.4.2	Drawings		X			
3.4.3	Maintenance, Operators, and Technical Manuals		X			
3.4.4	Test Plans and Procedures			X		
3.4.5	Quality Assurance Documentation			X		
3.4.6	Construction Records	X				
3.4.6.A	Construction Records			X		

Table 4-1 Conformance Verification Matrix (TBV) (continued)

Requirement		Verification Method Code				
Number	Title	N/A	Analysis	Exam	Demo	Test
3.4.6.B	Construction Records			X		
3.4.7	Computer Documentation		X			
3.4.8	Records Management	X				
3.5	Logistics	X				
3.5.1	Maintenance		X			
3.5.1.1	Equipment Maintenance	X				
3.5.1.1.1	On-Line Maintenance	X				
3.5.1.1.1.A	On-Line Maintenance		X			
3.5.1.1.1.B	On-Line Maintenance		X			
3.5.1.1.1.C	On-Line Maintenance		X			
3.5.1.1.1.D	On-Line Maintenance		X			
3.5.1.1.1.E	On-Line Maintenance		X			
3.5.1.1.2	Intermediate Maintenance		X			
3.5.1.1.3	Salvaging, Off-Site Repair, and Vendor Repair		X			
3.5.1.2	Calibration Maintenance	X				
3.5.1.3	Cask Maintenance	X				
3.5.1.4	Standardization	X				
3.5.1.4.A	Standardization		X			
3.5.1.4.B	Standardization		X			
3.5.1.5	Security Equipment Maintenance	X				
3.5.2	Supply		X	X		
3.5.3	Facilities	X				
3.5.3.1	Warehouse Requirements	X				
3.5.4	Support and Test Equipment		X			
3.6	Personnel and Training	X				
3.6.1	Personnel	X				
3.6.1.A	Personnel		X			X
3.6.1.B	Personnel		X			

Table 4-1 Conformance Verification Matrix (TBV) (continued)

Requirement		Verification Method Code				
Number	Title	N/A	Analysis	Exam	Demo	Test
3.6.2	Training			X		
3.6.2.1	General Requirements	X				
3.6.2.1.A	General Requirements		X			
3.6.2.1.B	General Requirements				X	
3.6.2.1.B.1	General Requirements				X	
3.6.2.1.B.2	General Requirements				X	
3.6.2.1.B.3	General Requirements				X	
3.6.2.1.B.4	General Requirements				X	
3.6.2.1.B.5	General Requirements				X	
3.7	Engineered Barrier Segment Major Component Characteristics/Requirements		X			
3.7.A	Engineered Barrier Segment Major Component Characteristics/Requirements		X			
3.7.B	Engineered Barrier Segment Major Component Characteristics/Requirements		X			
3.7.C	Engineered Barrier Segment Major Component Characteristics/Requirements		X			
3.7.D	Engineered Barrier Segment Major Component Characteristics/Requirements		X			
3.7.E	Engineered Barrier Segment Major Component Characteristics/Requirements		X			
3.7.F	Engineered Barrier Segment Major Component Characteristics/Requirements		X			X
3.7.G	Engineered Barrier Segment Major Component Characteristics/Requirements		X			X
3.7.G.1	Engineered Barrier Segment Major Component Characteristics/Requirements		X			X
3.7.G.2	Engineered Barrier Segment Major Component Characteristics/Requirements		X			X
3.7.G.3	Engineered Barrier Segment Major Component Characteristics/Requirements		X			X
3.7.G.4	Engineered Barrier Segment Major Component Characteristics/Requirements		X			X

Table 4-1 Conformance Verification Matrix (TBV) (continued)

Requirement		Verification Method Code				
Number	Title	N/A	Analysis	Exam	Demo	Test
3.7.G.5	Engineered Barrier Segment Major Component Characteristics/Requirements		X			X
3.7.G.6	Engineered Barrier Segment Major Component Characteristics/Requirements		X			X
3.7.1	Waste Package Subsystem Requirements	X				
3.7.1.A	Waste Package Subsystem Requirements		X	X		X
3.7.1.B	Waste Package Subsystem Requirements		X	X	X	X
3.7.1.C	Waste Package Subsystem Requirements		X			X
3.7.1.D	Waste Package Subsystem Requirements		X			X
3.7.1.E	Waste Package Subsystem Requirements		X		X	X
3.7.1.F	Waste Package Subsystem Requirements			X	X	
3.7.1.G	Waste Package Subsystem Requirements		X			
3.7.1.H	Waste Package Subsystem Requirements		X			
3.7.1.I	Waste Package Subsystem Requirements		X			
3.7.1.J	Waste Package Subsystem Requirements	X				
3.7.1.J.1	Waste Package Subsystem Requirements			X		
3.7.1.J.2	Waste Package Subsystem Requirements			X		
3.7.1.J.3	Waste Package Subsystem Requirements			X		
3.7.1.K	Waste Package Subsystem Requirements		X		X	
3.7.1.1	Waste Form Requirements	X				
3.7.1.1.A	Waste Form Requirements		X	X		
3.7.1.1.B	Waste Form Requirements		X	X		
3.7.1.1.C	Waste Form Requirements		X	X		X
3.7.1.1.D	Waste Form Requirements		X		X	
3.7.1.1.E	Waste Form Requirements		X		X	X
3.7.1.1.F	Waste Form Requirements		X		X	X
3.7.1.1.G	Waste Form Requirements		X			X
3.7.1.1.H	Waste Form Requirements		X		X	X
3.7.1.2	Waste Container Requirements	X				

Table 4-1 Conformance Verification Matrix (TBV) (continued)

Requirement		Verification Method Code				
Number	Title	N/A	Analysis	Exam	Demo	Test
3.7.1.2.A	Waste Container Requirements		X		X	X
3.7.1.2.B	Waste Container Requirements		X			
3.7.1.2.C	Waste Container Requirements		X			
3.7.1.2.D	Waste Container Requirements		X			X
3.7.1.2.E	Waste Container Requirements			X		
3.7.1.2.F	Waste Container Requirements		X		X	
3.7.1.2.F.1	Waste Container Requirements		X			X
3.7.1.2.F.2	Waste Container Requirements		X			X
3.7.1.2.G	Waste Container Requirements		X			X
3.7.1.2.H	Waste Container Requirements		X			X
3.7.1.2.H.1	Waste Container Requirements				X	
3.7.1.2.H.2	Waste Container Requirements			X		
3.7.1.2.H.3	Waste Container Requirements			X		
3.7.1.2.H.4	Waste Container Requirements		X	X		
3.7.1.2.I	Waste Container Requirements			X	X	X
3.7.1.2.J	Waste Container Requirements		X		X	X
3.7.1.3	Internal Structure Requirements	X				
3.7.1.3.A	Internal Structure Requirements		X			
3.7.1.3.B	Internal Structure Requirements		X		X	
3.7.1.3.C	Internal Structure Requirements		X	X		
3.7.1.3.D	Internal Structure Requirements		X		X	X
3.7.1.3.E	Internal Structure Requirements		X			
3.7.1.3.F	Internal Structure Requirements		X			X
3.7.1.3.G	Internal Structure Requirements		X			X
3.7.1.4	Additional Containers, Packing, Shielding and Absorbing Materials		X			
3.7.2	Backfill Requirements	X				
3.7.2.A	Backfill Requirements		X			X
3.7.2.B	Backfill Requirements		X			X

Table 4-1 Conformance Verification Matrix (TBV) (continued)

Requirement		Verification Method Code				
Number	Title	N/A	Analysis	Exam	Demo	Test
3.7.2.C	Backfill Requirements		X			X
3.7.2.D	Backfill Requirements		X			
3.7.2.E	Backfill Requirements		X			
3.7.2.F	Backfill Requirements		X			X
3.7.3	Emplacement Hardware Requirements	X				
3.8	Precedence	X				
3.8.A	Precedence	X				
3.8.A.1	Precedence		X			
3.8.A.1.a	Precedence		X			
3.8.A.1.b	Precedence		X			
3.8.A.1.c	Precedence		X			
3.8.A.2	Precedence		X			
3.8.A.3	Precedence		X			
3.8.A.4	Precedence		X			
3.8.B	Precedence		X			
3.9	Qualification/Quality Assurance		X			

5. PREPARATION FOR OPERATIONS

Not Applicable

6. NOTES

6.1 DEFINITIONS

Accessible environment means: (1) the atmosphere, (2) the land surface, (3) surface water, (4) oceans, and (5) the portion of the lithosphere that is outside the controlled area.

[10 CFR 60.2]

Administrative delay time (ADT) is that portion of downtime during which maintenance is delayed for administrative reasons.

Anticipated processes and events are those natural processes and events that are reasonably likely to occur during the period the intended performance objective must be achieved. To the extent reasonable in the light of the geologic record, it shall be assumed that those processes operating in the geologic setting during the Quaternary Period continue to operate, but with the perturbation caused by the presence of emplaced radioactive waste superimposed thereon.

[10 CFR 60.2]

Architecture is that part of the physical system to be built, found, or selected to perform a function subject to its stated requirements.

As low as is reasonably achievable (ALARA) means making every reasonable effort to maintain exposures to radiation as far below the dose limits in 10 CFR 20 as is practical consistent with the purpose for which the licensed activity is undertaken, taking into account the state of technology, the economics of improvements in relation to state of technology, the economics of improvements in relation to benefits to the public health and safety, and other societal and socioeconomic considerations, and in relation to utilization of nuclear energy and licensed materials in the public interest.

[10 CFR 20.1003]

Backfill is a material whose primary purpose is to fill the space previously created by excavation or drilling, such as in a shaft or borehole.

Barrier is any material or structure that prevents or substantially delays movement of water or radionuclides.

[10 CFR 60.2]

Canister is the structure surrounding the waste form (e.g., high-level waste immobilized in borosilicate glass) that facilitates handling, storage, transportation, and/or disposal. A metal receptacle with the following purpose: (1) for solidified high-level radioactive waste, its purpose is a pour mold and (2) for spent fuel, it may provide structural support for loose rods, nonfuel components or containment of radionuclides during preclosure operations.

Cask is a container for shipping or storing spent nuclear fuel and/or high-level waste that meets all applicable regulatory requirements.

Cask maintenance means those functions necessary to keep a transportation cask in working order (e.g., keep cask in accordance with certification).

Civilian Radioactive Waste Management System (CRWMS) is the composite of the sites, and all facilities, systems, equipment, materials, information, activities, and the personnel required to perform those activities necessary to manage radioactive waste disposal.

Cladding is the metal cylinder that surrounds the uranium pellets.

Container is the component of the waste package that is placed around the waste form or the canistered waste form.

Containment is the confinement of radioactive waste within a designated boundary.
[10 CFR 60.2]

Controlled area means:

(1) a surface location, to be marked by suitable monuments, extending horizontally no more than 10 kilometers in any direction from the outer boundary of the underground facility, and the underlying subsurface, which area has been committed to use as a geologic repository and from which incompatible activities would be restricted following permanent closure;
[10 CFR 60.2]

(2) (a) a surface location, to be identified by passive institutional controls, that encompasses no more than 100 square kilometers and extends horizontally no more than 5 kilometers in any direction from the outer boundary of the original location of the radioactive wastes in a disposal system; and (b) the subsurface underlying such a surface location;
[40 CFR 191.12(g)]

(3) an area, outside of a restricted area but inside the site boundary, access to which can be limited by the licensee for any reason.
[10 CFR 20.1003]

Decommission means to remove (as a facility) safely from service and reduce residual radioactivity to a level that permits release of the property for unrestricted use and termination of license.
[10 CFR 72.3]

Disposal is the isolation of radioactive wastes from the accessible environment. [10 CFR 60.2] Disposal means the emplacement in a repository of high-level radioactive waste, spent nuclear fuel, or other highly radioactive material with no foreseeable intent of recovery, whether or not such emplacement permits the recovery of such waste.
[10 CFR 961.11][NWPA Section 2(9)]

Disposal package or **waste package** is the primary container that holds, and is in contact with, solidified high-level radioactive waste, spent nuclear fuel, or other radioactive materials, and any overpacks that are emplaced at a repository.
[NWPA Section 2(90]

Disposal system is any combination of engineered and natural barriers that isolate spent nuclear fuel or radioactive waste after disposal.

[40 CFR 191.12(a)]

Drift is a nearly horizontal mine passageway driven on or parallel to the course of a vein or rock stratum or a small crosscut in a mine.

Engineered barrier system is the waste packages and the underground facility.

[10 CFR 60.2]

Engineered Barrier Segment consists of the waste packages, any backfill placed in emplacement drifts, and emplacement hardware used to support the emplaced waste packages. It also includes that portion of the underground facility that provides long term waste isolation.

Function is a primary statement of purpose; definition of what a system or subsystem must accomplish to meet the system mission.

Functional analysis is the first step in the Systems Engineering process that defines a baseline of functions and function performance requirements that must be met in order to adequately accomplish the operation, support, test, and production requirements of a system.

Functional interface is the interaction between functions, as in the flow of material or information between a sequence of activities.

Furnishings are structural steel sets consisting of the following: buttons attached to fabricated brackets, which are fixed to the shaft wall or to other structural members, shaft guides, fixed guide brackets and backers, conveyance chairs, crash beams, various enclosures or blockouts required to support instrumentation and cabling, and utility brackets to facilitate installation of shaft utilities such as electrical power, communication, compressed air, water, and waste-water removal.

Geologic repository is a system which is intended to be used for, or may be used for, the disposal of radioactive wastes in excavated geologic media. A geologic repository includes: (1) the geologic repository operations area, and (2) the portion of the geologic setting that provides isolation of the radioactive waste.

[10 CFR 60.2]

Geologic repository operations area (GROA) is a high-level radioactive waste facility that is part of a geologic repository, including both surface and subsurface areas, where waste handling activities are conducted.

[10 CFR 60.2]

High-level Radioactive Waste (HLW) means (1) the highly radioactive material resulting from the reprocessing of spent nuclear fuel, including liquid waste produced directly in reprocessing and any solid material derived from such liquid waste that contains fission products in sufficient concentrations; and (2) other highly radioactive material that the Nuclear Regulatory Commission, consistent with existing law, determines by rule requires permanent isolation.

[NWPA Section 2(1)][10 CFR 72.3][10 CFR 960.2][10 CFR 961.11]

(Items) **Important to Waste Isolation** means the natural and engineered barriers which are relied on for achieving the postclosure performance objectives in 10 CFR 60 Subpart E.

Institutional Barrier System consists of the active and passive institutional controls.

> Active institutional controls include: (1) Controlling access to the MGDS by any means other than passive institutional controls; (2) Performing maintenance operations or remedial actions at a site; (3) Controlling or cleaning up releases from a site; or (4) Monitoring parameters related to disposal system performance.
>
> Passive institutional controls include: (1) Permanent markers placed at a disposal site; (2) Public records and archives; (3) Government ownership and regulations regarding land or resource use, and (4) other means of preserving knowledge about the location, design, and contents of a disposal system. (TBR)
>
> [40 CFR 191.02]

Isolation is inhibiting the transport of radioactive material so that amounts and concentrations of this material entering the accessible environment will be kept within prescribed limits.

[10 CFR 60.2]

Logistics Delay Time means maintenance downtime that is expanded as a result of waiting for a spare part, tool, facility, or whatever to become available in order to effect repair.

Mean Time to Repair (MTTR) is the mean or average elapsed time to perform scheduled and unscheduled maintenance (Excludes LDT and ADT).

Mission Critical refers to those systems, structures, and components (and related activities) whole importance to the successful accomplishment of the CRWMS mission is determined by management to warrant the selected application of QA Program controls.

Off-normal are abnormal or unplanned events or conditions that adversely affect, potentially affect, or are indicative of degradation in, the safety, security, environmental or health protection performance or operation of a facility.

Package means the packaging together with its radioactive contents as presented for transport.

[10 CFR 71.4]

Packaging means the assembly of components necessary to ensure compliance with the packaging requirements of 10 CFR 71. It may consist of one or more receptacles, absorbent materials, spacing structures, thermal insulation, radiation shielding, and devices for cooling or absorbing mechanical shocks. The vehicle, tie-down system, and auxiliary equipment may be designated as part of the packaging.

[10 CFR 71.4]

Permanent closure is final backfilling of the underground facility and the sealing of shafts and boreholes.

[10 CFR 60.2]

Physical system means the Civilian Radioactive Waste Management System (CRWMS) consisting of the composite of the sites, and all facilities, systems, equipment, materials, information, activities, and the personnel required to perform those activities necessary to manage waste disposal.

Radioactive waste or **waste** is HLW and other radioactive materials other than HLW that are received for emplacement in a geologic repository.

[10 CFR 60.2]

Repository is any system licensed by the Commission that is intended to be used for, or may be used for, the permanent deep geologic disposal of high-level radioactive waste and spent nuclear fuel, whether or not such system is designed to permit the recovery, for a limited period during initial operation, of any materials placed in such system . Such term includes both surface and subsurface areas at which high-level radioactive waste and spent nuclear fuel handling activities are conducted.

[NWPA]

Retrieval is the act of intentionally removing radioactive waste from the underground location at which the waste had been previously emplaced for disposal.

[10 CFR 60.2]

Spent Nuclear Fuel (SNF) is fuel which has been withdrawn from a nuclear reactor following irradiation, the constituent elements of which have not separated by reprocessing. {Specifically in this document, SNF includes (1) intact, non-defective fuel assemblies; (2) failed fuel assemblies in canisters; (3) fuel assemblies in canisters; (4) consolidated fuel rods in canisters; (5) non-fuel assembly hardware inserted in PWR fuel assemblies, including, but not limited to, control rod assemblies, burnable poison assemblies, thimble plug assemblies, neutron source assemblies, instrumentation assemblies; (6) fuel channels attached to boiling water reactor fuel assemblies; and (7) non-fuel assembly hardware and structural parts of assemblies resulting from consolidation in canisters.}

[NWPA Section 2(23)][10 CFR 961.11]

Unanticipated processes and events mean those processes and events affecting the geologic setting that are judged not to be reasonably likely to occur during the period the intended performance objective must be achieved, but which are nevertheless sufficiently credible to warrant consideration. Unanticipated processes and events may be either natural processes or events or processes and events initiated by human activities other than those activities licensed under this part. Processes and events may be either natural processes or events or processes and events initiated by human activities other than those activities licensed under this part. Processes and events initiated by human activities may only be found to be sufficiently credible to warrant consideration if it is assumed that: (1) The monuments provided by this part are sufficiently permanent to serve their intended purpose; (2) the value to future generations of potential resources within the site can be assessed adequately under the applicable provisions of this part; (3) an understanding of the nature of radioactivity, and an appreciation of its hazards, have been retained in some functioning institutions; (4) institutions are able to assess risk and to take remedial action

at a level of social organization and technological competence equivalent to, or superior to, that which was applied in initiating the processes or events concerned; and (5) relevant records are preserved, and remain accessible, for several hundred years after permanent closure.

[10 CFR 60.2]

Underground facility is the underground structure, including openings and backfill materials, but excluding shafts, boreholes, and their seals.

[10 CFR 60.2]

Unrestricted area means any area, access to which is not controlled by the licensee for purposes of protection of individuals from exposure to radiation and radioactive materials, and any area used for residential quarters.

Waste form is the radioactive waste materials and any encapsulating or stabilizing matrix.

[10 CFR 60.2]

Waste Package means the waste form and any containers, shielding, packing, and other absorbent materials immediately surrounding an individual waste container.

[10 CFR 60.2]

6.2 ACRONYMS AND ABBREVIATIONS

ACD	Advanced Conceptual Design
ADT	Administrative Delay Time
ALARA	As low as is reasonably achievable
BITE	Built-in-Test Equipment
BWR	Boiling Water Reactor
CFR	Code of Federal Regulations
CHLW	Commercial High-Level Radioactive Waste
CRD	CRWMS System Requirements Document
CRWMS	Civilian Radioactive Waste Management System (Formerly NWMS - Effective 1-9-92)
DBA	Design Basis Accidents
DHLW	Defense High-Level Radioactive Waste
DOE	U.S. Department of Energy
EB-DRD	Engineered Barrier Design Requirements Document
GROA	Geologic Repository Operations Area
HLW	High-level radioactive waste
LDT	Logistics Delay Time
LSA	Logistic Support Analysis
LWR	Light Water Reactor
MGDS	Mined Geologic Disposal System
MGDS-RD	Mined Geologic Disposal System Requirements Document
MOA	Memorandum of Agreement
MOU	Memorandum of Understanding
mSv	milli Sievert
MSHA	Mine Safety and Health Administrative
NRC	Nuclear Regulatory Commission
NWPA	Nuclear Waste Policy Act of 1982
NWPAA	Nuclear Waste Policy Amendments Act of 1987
OCRWM	Office of Civilian Radioactive Waste Management (DOE)
PWR	Pressurized Water Reactor
QA	Quality Assurance
QARD	Quality Assurance Requirements and Description Document (OCRWM)
RD	Requirements Document
RIB	Reference Information Base
SCP	Site Characterization Plan
SNF	Spent Nuclear Fuel
S&TE	Support and Test Equipment
TBD	To be determined
TBR	To be resolved
TBV	To be verified
TSw3	Topopah Springs welded unit 3 (Vitrophyre tuff)
UCRL	University of California Radiation Laboratory
USC	United States Code
WA	Waste Acceptance
WA-SRD	Waste Acceptance System Requirements Document
WMSR	Waste Management System Requirements

6.3 REQUIREMENTS CROSS REFERENCE

Table 6-1 provides a requirements cross reference between the regulatory source documents, the MGDS-RD, and the EB-DRD. This table establishes the traceability of all requirements contained in the EB-DRD.

Appendix A identifies, for each requirements paragraph in the MGDS-RD, the corresponding paragraph in the EB-DRD. For those requirements not allocated to the Engineered Barrier Segment, the allocation to the site or repository segments is provided.

Table 6-1 Requirements Cross Reference

SOURCE	MGDS-RD PARAGRAPH	EB-DRD PARAGRAPH
10 CFR 20	3.2.5.1.2	3.2.5.1.2.A
10 CFR 20.1101(b)	3.2.2.1.B	3.2.2.1.A
10 CFR 20.1201 (Derived)		3.2.3.3.B.3
10 CFR 20.1301 (Derived)		3.2.3.3.B.3
10 CFR 20.1301(a) (Derived)		3.2.2.3.A
10 CFR 20.1301(a)(2) (Derived)		3.2.2.3.C
10 CFR 20.1301(b) (Derived)		3.2.2.3.B
10 CFR 20.1301(c) (Derived)		3.2.2.3.A
10 CFR 20.1701	3.2.2.4.A	3.2.2.4
10 CFR 60.15(c)(1)	3.2.1.1.B	3.2.3.2
10 CFR 60.21(c)(1)(ii)(D)	3.2.1.1.J	3.3.1.A
10 CFR 60.51(a)(1)	3.2.1.7.A	3.2.1.6.A
10 CFR 60.52(c)(2)	3.2.1.6	3.2.1.5
10 CFR 60.72(b)(11)	3.4.6.B	3.4.6.B
10 CFR 60.74(a)(1) (Derived)		3.2.3.3.B.1.a
10 CFR 60.74(a)(2) (Derived)		3.2.3.3.B.1.b
10 CFR 60.74(a)(4) (Derived)		3.2.3.3.B.1.c
10 CFR 60.111(a)	3.2.1.3.K, 3.2.1.4, 3.2.1.5.C	3.2.1.2.C, 3.2.1.3, 3.2.1.4.C, 3.2.2.1.D
10 CFR 60.111(b)(1)	3.2.1.5.B	3.2.1.4.B
10 CFR 60.112	3.7.2.2.A, 3.7.3.2.B, 3.7.3.2.E.3	3.2.3.1.B, 3.2.3.3.A.16.c, 3.7.B
10 CFR 60.113(a)(1)(i) (Derived)		3.7.C
10 CFR 60.113(a)(1)(ii)(A)	3.7.3.2.C	3.7.D. 3.7.1.I, 3.7.1.2.B
10 CFR 60.113(a)(1)(ii)(B)	3.7.3.2.D	3.7.E

Table 6-1 Requirements Cross Reference (continued)

SOURCE	MGDS-RD PARAGRAPH	EB-DRD PARAGRAPH
10 CFR 60.113(a)(2)	3.7.2.2.B	3.2.3.1.A.1
10 CFR 60.130	3.3.1.E	3.3.1.F
10 CFR 60.131(a)(2)	3.2.5.2.6, 3.2.5.2.8.E	3.2.5.2.6, 3.2.5.2.8.E
10 CFR 60.131(b)(1) (Derived)		3.2.6.1.A
10 CFR 60.131(b)(3)	3.2.5.1.3	3.2.5.1.3
10 CFR 60.131(b)(3)(i)	3.2.1.8.C	3.2.1.7.B
10 CFR 60.131(b)(3)(i) (Derived)		3.2.6.2.1
10 CFR 60.131(b)(3)(ii) (Derived)		3.2.6.2.2
10 CFR 60.131(b)(4)(i)	3.2.1.8.B	3.2.1.7.A
10 CFR 60.131(b)(6)	3.2.5.2.1, 3.5.1	3.2.5.2.1, 3.5.1
10 CFR 60.131(b)(7)	3.2.2.6.A	3.2.2.6.A, 3.7.1.3.A
10 CFR 60.133(a)(1)	3.7.3.4.A	3.2.3.3.A.14
10 CFR 60.133(f)	3.7.2.6.G.2	3.2.3.3.A.15
10 CFR 60.133(h)	3.7.3.2.A	3.7.A
10 CFR 60.133(i)	3.7.3.4.C	3.2.3.3.A.17, 3.7.G
10 CFR 60.134(a)	3.7.3.2.E.1	3.2.3.3.A.16.a
10 CFR 60.134(b)(1)	3.7.3.2.E.2	3.2.3.3.A.16.b
10 CFR 60.134(b)(2)	3.7.3.2.E.2	3.2.3.3.A.16.b
10 CFR 60.135(a)(1)	3.7.3.3.A	3.7.1.A, 3.7.1.2.G
10 CFR 60.135(a)(1) (Derived)		3.7.1.2.C
10 CFR 60.135(a)(2)	3.7.3.3.B	3.7.1.B
10 CFR 60.135(b)(1)	3.7.3.3.C	3.7.1.C
10 CFR 60.135(b)(2)	3.7.3.3.D	3.7.1.D
10 CFR 60.135(b)(3)	3.7.3.3.E	3.7.1.E
10 CFR 60.135(b)(4)	3.7.3.3.F	3.7.1.F, 3.7.1.2.E
10 CFR 60.135(c)(1)	3.7.3.3.G.1, 3.7.3.3.G.2	3.7.1.1.A, 3.7.1.1.B

Table 6-1 Requirements Cross Reference (continued)

SOURCE	MGDS-RD PARAGRAPH	EB-DRD PARAGRAPH
10 CFR 60.135(c)(2)	3.7.3.3.G.3	3.7.1.1.C
10 CFR 60.135(c)(3)	3.7.3.3.G.4	3.7.1.1.D
10 CFR 60.140(d)(2) (Derived)		3.2.3.3.B.2.a, 3.2.3.3.B.2.b
10 CFR 60.141(b) (Derived)		3.2.3.3.B.6
10 CFR 60.141(e)	3.7.2.7.D	3.2.3.3.B.5.a
10 CFR 60.142(a)	3.2.1.2.A, 3.7.2.7.B	3.2.1.1
10 CFR 60.143(c) (Derived)		3.2.3.3.B.5.b
10 CFR 60.160	3.6.1.A	3.6.1.A
10 CFR 60.162	3.6.1.C	3.6.1.B
10 CFR 960.3-4	3.3.11.B	3.3.11
10 CFR 961.11 VI.A.1	3.2.3.2.2.A.3, 3.2.3.2.2.B.2	3.2.3.4.B, 3.2.3.4.E
10 CFR 961.11 App E, B.1	3.2.3.2.2.A.1	3.2.3.4.C.1.a, 3.2.3.4.C.1.b
10 CFR 961.11 App E, B.2	3.2.3.2.2.A.1	3.2.3.4.C.1.c
10 CFR 961.11 App E, B.3	3.2.3.2.2.A.1	3.2.3.4.C.1.d
10 CFR 961.11 App E, B.4	3.2.3.2.2.A.1	3.2.3.4.C.1.e
10 CFR 961.11 App E, B.5	3.2.3.2.2.A.1	3.2.3.4.C.1.f
10 CFR 961.11, App E, B.6	3.2.3.2.2.A.2	3.2.3.4.D
29 CFR 1910	3.2.6.1.C, 3.3.6.2.E, 3.3.6.8.A	3.3.6.1.B, 3.3.6.2.E, 3.3.6.8.A
29 CFR 1910, E	3.3.6.6.C	3.3.6.6.B
29 CFR 1910, H	3.3.6.3.E	3.3.6.3
29 CFR 1910, J	3.3.6.6.A	3.3.6.6.A
29 CFR 1910, O	3.3.6.3.E	3.3.6.3
29 CFR 1910.147	3.3.6.8.B	3.3.6.8.B
29 CFR 1926	3.3.6.1.B, 3.3.6.2.E	3.2.6.1.B, 3.3.6.2.E
29 USC 651 et seq.	3.3.6.1.A	3.3.6.1.A
30 CFR 57	3.3.6.1.B, 3.3.6.2.E, 3.3.6.5, 3.3.6.8.A	3.3.6.1.B, 3.3.6.2.E, 3.3.6.5, 3.3.6.8.A
30 CFR 57, M	3.5.1.1.1.E	3.5.1.1.1.E

Table 6-1 Requirements Cross Reference (continued)

SOURCE	MGDS-RD PARAGRAPH	EB-DRD PARAGRAPH
30 CFR 57.12016	3.3.6.8.B	3.3.6.8.B
40 CFR 191.03(a)(1) (TBR)	3.2.2.1.F.1	3.2.2.1.B
40 CFR 191.13(a) (TBR)	3.2.1.7.C	3.2.1.6.B
40 CFR 191.15 (TBR)	3.2.2.1.G	3.2.3.1.A.2
40 CFR 191.16(a) (TBR) (Derived)		3.2.3.1.A.3
40 CFR 191.16(b) (TBR) (Derived)		3.2.3.1.A.4
42 USC 10131(b)(1)	3.7.2.8.C	3.2.3.3.A.1
DOE 4330.4A, I, 3.1.4	3.6.2.1.A	3.6.2.1.A
DOE 4330.4A, I, 3.5	3.5.1.1.1.D	3.5.1.1.1.D
DOE 4700.1, p.V-17, q	3.2.5.2.8.A	3.2.5.2.8.A
DOE 6430.1A 0101-2	3.3.1.D	3.3.1.E
DOE 6430.1A, 0109	3.3.4.B	3.3.4.B
DOE 6430.1A, 0111-2.8.1	3.2.6.2.3	3.2.6.2.3
DOE 6430.1A, 0111-2.8.4	3.2.6.1.I	3.2.6.1.D
DOE 6430.1A, 0111-2.8.5	3.2.6.2.4	3.2.6.2.4
DOE 6430.1A, 0111-99.0	3.2.4.6.D	3.2.4.6.B
DOE 6430.1A, 0900-99.0	3.2.4.1	3.2.4.1
DOE 6430.1A, 1300-4	3.2.2.6.B	3.2.2.6.B
DOE 6430.1A, 1300-12.4.11	3.3.3.A, 3.3.3.B, 3.3.3.C, 3.3.3.D, 3.3.3.E	3.3.3.A, 3.3.3.B, 3.3.3.C, 3.3.3.D, 3.3.3.E
DOE 6430.1A, 1324-2.1	3.2.4.6.A	3.2.4.6.A
DOE/RW-0333P	3.3.4.A, 3.3.8.1.A, 3.4.1.C, 3.4.2, 3.4.3, 3.4.5, 3.4.7, 3.9	3.3.4.A, 3.3.8.1.A, 3.4.1.B, 3.4.2, 3.4.3, 3.4.5, 3.4.7, 3.9
MOA/RW/NS (Memorandum, dated April 16, 1992, MOA on Nuclear Safety Requirements)	3.8.B	3.8.B
NWPA, 111(a)(1)	3.2.1.A	3.2.1.A
NWPA, 114(d)	3.2.1.3.A	3.2.1.2.A

Table 6-1 Requirements Cross Reference (continued)

SOURCE	MGDS-RD PARAGRAPH	EB-DRD PARAGRAPH
NWPA, 122	3.2.1.5.A	3.2.1.4.A
Presidential Memo, 1985	3.2.1.A	3.2.1.A
UCRL 15673, Sec 1	3.2.5.2.8.B	3.2.5.2.8.B
UCRL 15673, Sec 2	3.2.5.2.8.C	3.2.5.2.8.C
UCRL 15673, Sec 3	3.2.5.2.8.D	3.2.5.2.8.D
CRD, 3.2.1.B	3.2.1.3.J	3.2.1.2.B
CRD, 3.2.1.1.E	3.2.1.3.J	3.2.1.2.B
CRD, 3.2.4	3.2.4	3.2.4
CRD, 3.2.4.1	3.2.4.1	3.2.4.1
CRD, 3.2.5.1.A	3.2.5.1	3.2.5.1
CRD, 3.2.5.1.B	3.2.5.1.1	3.2.5.1.1
CRD, 3.2.5.1.D	3.2.5.1.2	3.2.5.1.2.A
CRD, 3.2.5.1.E	3.2.5.1.5	3.2.5.1.5
CRD, 3.2.5.3.A	3.2.5.3.A	3.2.5.3.A
CRD, 3.2.5.3.B	3.2.5.3.B	3.2.5.3.B
CRD, 3.2.5.4	3.2.5.4.B	3.2.5.4
CRD, 3.2.5.5.A	3.2.5.5.A	3.2.5.5.A
CRD, 3.2.5.5.B	3.2.5.5.B	3.2.5.5.B
CRD, 3.2.6.1.A	3.2.6.1.A	3.2.6.1.B
CRD, 3.2.6.1.B	3.2.6.1.B	3.2.6.1.B
CRD, 3.2.7	3.2.7	3.2.7
CRD, 3.2.8	3.2.8	3.2.8
CRD, 3.2.9	3.2.9	3.2.9
CRD, 3.3.1.A	3.3.1.A, 3.3.1.B	3.3.1.B, 3.3.1.C
CRD, 3.3.1.B	3.3.1.F	3.3.1.G
CRD, 3.3.1.C	3.3.1.G	3.3.1.H
CRD, 3.3.3	3.3.3.F	3.3.3.F
CRD, 3.3.5	3.3.5	3.3.5
CRD, 3.3.6.2.A	3.3.6.2.A	3.3.6.2.A

Table 6-1 Requirements Cross Reference (continued)

SOURCE	MGDS-RD PARAGRAPH	EB-DRD PARAGRAPH
CRD, 3.3.6.2.B	3.3.6.2.B	3.3.6.2.B
CRD, 3.3.6.2.C	3.3.6.2.C	3.3.6.2.C
CRD, 3.3.6.2.D	3.3.6.2.D	3.3.6.2.D
CRD, 3.3.7.11	3.3.7.11	3.3.7
CRD, 3.3.8.1.B	3.3.8.1.B	3.3.8.1.B
CRD, 3.3.8.1.C	3.3.8.1.C	3.3.8.1.C
CRD, 3.3.8.1.D	3.3.8.1.D, 3.5.1.4.A, 3.5.1.4.B	3.3.8.1.D, 3.5.1.4.A, 3.5.1.4.B
CRD, 3.3.9.B	3.3.9.B	3.3.9.A
CRD, 3.3.9.C	3.3.9.C	3.3.9.B
CRD, 3.4.1.A	3.4.1.B	3.4.1.A
CRD, 3.4.4	3.4.4	3.4.4
CRD, 3.4.6.A	3.4.6.A	3.4.6.A
CRD, 3.5.1.1.A	3.5.1.1.1.B	3.5.1.1.1.B
CRD, 3.5.1.1.B	3.5.1.1.1.C	3.5.1.1.1.C
CRD, 3.5.2	3.5.2	3.5.2
CRD, 3.5.4	3.5.4	3.5.4
CRD, 3.6.2	3.6.2	3.6.2
CRD, 3.6.2.1.A	3.6.2.1.B	3.6.2.1.B
CRD, 3.6.2.1.D	3.6.2.1.B	3.6.2.1.B
CRD, 3.7.4.1.1	3.7.3.1.A, 3.7.3.1.B	3.7
CRD, 3.7.4.2.G	3.2.1.3.J	3.2.1.2.B
CRD, 3.8	3.8.A	3.8.A
MGDS-RD	3.2.3.2.2.B.1	3.2.3.4.A.1
MGDS-RD	3.2.3.2.2.C	3.2.3.3.A.6
MGDS-RD	3.2.3.2.2.D	3.2.3.3.A.7
MGDS-RD	3.2.5.2.3	3.2.5.2.3
MGDS-RD	3.2.5.2.4.A	3.2.5.2.4.A
MGDS-RD	3.2.5.2.4.B	3.2.5.2.4.B
MGDS-RD	3.2.5.2.4.C	3.2.5.2.4.C

Table 6-1 Requirements Cross Reference (continued)

SOURCE	MGDS-RD PARAGRAPH	EB-DRD PARAGRAPH
MGDS-RD	3.2.5.2.5	3.2.5.2.5
MGDS-RD	3.2.5.2.7	3.2.5.2.7
MGDS-RD	3.2.5.2.9	3.2.5.2.9
MGDS-RD	3.2.6.1.C	3.2.6.1.C
MGDS-RD	3.3.1.C	3.3.1.D
MGDS-RD	3.5.1.1.1.A	3.5.1.1.1.A
MGDS-RD	3.5.1.1.2.A	3.5.1.1.2
MGDS-RD	3.5.1.1.3	3.5.1.1.3
MGDS-RD	3.7.2.6.K	3.2.3.3.A.3
MGDS-RD	3.7.3.4.D	3.2.3.3.A.3
WA-SRD 3.7.1.2.1.2.B		3.2.3.4.A.4
WA-SRD 3.7.1.2.1.2.1.B(7)		3.2.3.4.A.2
WA-SRD 3.7.1.2.1.2.17 (Derived)		3.2.3.4.A.5
Derived		3.2.2.1.C
Derived		3.2.3.1.A.5
Derived		3.2.3.3.A.2
Derived		3.2.3.3.A.4
Derived		3.2.3.3.A.5
Derived		3.2.3.3.A.8
Derived		3.2.3.3.A.8.a
Derived		3.2.3.3.A.8.b
Derived		3.2.3.3.A.8.c
Derived		3.2.3.3.A.8.d
Derived		3.2.3.3.A.9
Derived		3.2.3.3.A.10.a
Derived		3.2.3.3.A.10.b
Derived		3.2.3.3.A.10.c
Derived		3.2.3.3.A.11

Table 6-1 Requirements Cross Reference (continued)

SOURCE	MGDS-RD PARAGRAPH	EB-DRD PARAGRAPH
Derived		3.2.3.3.A.12
Derived		3.2.3.3.A.13
Derived		3.2.3.3.B.4
Derived		3.2.3.3.B.7
Derived		3.2.3.4.A.3
Derived		3.2.3.4.C.1.g
Derived		3.2.3.4.C.2
Derived		3.2.3.4.C.3
Derived		3.2.3.4.C.4
Derived		3.2.3.4.C.5
Derived		3.2.5.1.2.B
Derived		3.3.1.I
Derived		3.7.F
Derived		3.7.1.G
Derived		3.7.1.H
Derived		3.7.1.J
Derived		3.7.1.K
Derived		3.7.1.1.E
Derived		3.7.1.1.F
Derived		3.7.1.1.G
Derived		3.7.1.1.H
Derived		3.7.1.2.A
Derived		3.7.1.2.D
Derived		3.7.1.2.F
Derived		3.7.1.2.H
Derived		3.7.1.2.I
Derived		3.7.1.2.J
Derived		3.7.1.3.B
Derived		3.7.1.3.C

Table 6-1 Requirements Cross Reference (continued)

SOURCE	MGDS-RD PARAGRAPH	EB-DRD PARAGRAPH
Derived		3.7.1.3.D
Derived		3.7.1.3.E
Derived		3.7.1.3.F
Derived		3.7.1.3.G
Derived		3.7.2.A
Derived		3.7.2.B
Derived		3.7.2.C
Derived		3.7.2.D
Derived		3.7.2.E
Derived		3.7.2.F

Appendix A
MGDS-RD Traceability Matrix

MGDS-RD TRACEABILITY MATRIX	
MGDS-RD PARAGRAPH	EB-DRD PARAGRAPH
3.2.1.A	3.2.1.A These are also Site Segment and Repository Segment design requirements.
3.2.1.1.A	Not allocated to the Engineered Barrier Segment, these are Site Segment design requirements.
3.2.1.1.B	3.2.3.2 These are also Site Segment and Repository design requirements.
3.2.1.1.C	Not allocated to the Engineered Barrier Segment, these are Site Segment design requirements.
3.2.1.1.D	Not allocated to the Engineered Barrier Segment, these are Site Segment design requirements.
3.2.1.1.E	Not allocated to the Engineered Barrier Segment, these are Site Segment design requirements.
3.2.1.1.F.1	Not allocated to the Engineered Barrier Segment, these are Site Segment design requirements.
3.2.1.1.F.2	Not allocated to the Engineered Barrier Segment, these are Site Segment design requirements.
3.2.1.1.H	Not allocated to the Engineered Barrier Segment, these are Site Segment design requirements.
3.2.1.1.I	Not allocated to the Engineered Barrier Segment, these are Site Segment design requirements.
3.2.1.1.J	3.3.1.A These are also Site Segment and Repository Segment design requirements.
3.2.1.2.A	3.2.1.1 These are also Repository Segment design requirements.
3.2.1.2.B	Not allocated to the Engineered Barrier Segment, these are Repository Segment design requirements.
3.2.1.2.C	Not allocated to the Engineered Barrier Segment, these are Repository Segment design requirements.
3.2.1.2.D	Not allocated to the Engineered Barrier Segment, these are Repository Segment design requirements.
3.2.1.3.A	3.2.1.2.A These are also Repository Segment design requirements.
3.2.1.3.J	3.2.1.2.B These are also Repository Segment design requirements.
3.2.1.3.K	Not allocated to the Engineered Barrier Segment, these are Repository Segment design requirements.

MGDS-RD TRACEABILITY MATRIX	
MGDS-RD PARAGRAPH	EB-DRD PARAGRAPH
3.2.1.4	3.2.1.3 These are also Repository Segment design requirements.
3.2.1.5.A	3.2.1.4.A These are also Repository Segment design requirements.
3.2.1.5.B	3.2.1.4.B These are also Repository Segment design requirements.
3.2.1.5.C	3.2.1.2.C 3.2.1.4.C 3.2.2.1.D These are also Repository Segment design requirements.
3.2.1.6	3.2.1.5 These are also Repository Segment design requirements.
3.2.1.7.A	3.2.1.6.A These are also Repository Segment design requirements.
3.2.1.7.B	Not allocated to the Engineered Barrier Segment, these are Repository Segment design requirements.
3.2.1.7.C	3.2.1.6.B These are also Repository Segment design requirements.
3.2.1.8.A	Not allocated to the Engineered Barrier Segment, these are Repository Segment design requirements.
3.2.1.8.B	3.2.1.7.A These are also Repository Segment design requirements.
3.2.1.8.C	3.2.1.7.B These are also Repository Segment design requirements.
3.2.2.1.B	3.2.2.1.A These are also Repository Segment design requirements.
3.2.2.1.C	Not allocated to the Engineered Barrier Segment, these are Repository Segment design requirements.
3.2.2.1.D	Not allocated to the Engineered Barrier Segment, these are Repository Segment design requirements.
3.2.2.1.F	Not allocated to the Engineered Barrier Segment, these are Repository Segment design requirements.
3.2.2.1.F.1	3.2.2.1.B These are also Repository Segment design requirements.
3.2.2.1.G	3.2.3.1.A.2 These are also Repository Segment design requirements.
3.2.2.3.A	Not allocated to the Engineered Barrier Segment, these are Repository Segment design requirements.

MGDS-RD TRACEABILITY MATRIX	
MGDS-RD PARAGRAPH	EB-DRD PARAGRAPH
3.2.2.3.B	Not allocated to the Engineered Barrier Segment, these are Repository Segment design requirements.
3.2.2.3.C	Not allocated to the Engineered Barrier Segment, these are Repository Segment design requirements.
3.2.2.4.A	3.2.2.4 These are also Repository Segment design requirements.
3.2.2.4.B	Not allocated to the Engineered Barrier Segment, these are Repository Segment design requirements.
3.2.2.4.C	Not allocated to the Engineered Barrier Segment, these are Repository Segment design requirements.
3.2.2.5.A.1	Not allocated to the Engineered Barrier Segment, these are Repository Segment design requirements.
3.2.2.5.A.2	Not allocated to the Engineered Barrier Segment, these are Repository Segment design requirements.
3.2.2.5.A.3	Not allocated to the Engineered Barrier Segment, these are Repository Segment design requirements.
3.2.2.5.B.1	Not allocated to the Engineered Barrier Segment, these are Repository Segment design requirements.
3.2.2.5.B.2	Not allocated to the Engineered Barrier Segment, these are Repository Segment design requirements.
3.2.2.6.A	3.2.2.6.A 3.7.1.3.A These are also Repository Segment design requirements.
3.2.2.6.B	3.2.2.6.B These are also Repository Segment design requirements.
3.2.2.6.C	Not allocated to the Engineered Barrier Segment. these are Repository Segment design requirements.
3.2.2.7.A	Not allocated to the Engineered Barrier Segment, these are Repository Segment design requirements.
3.2.2.7.B	Not allocated to the Engineered Barrier Segment, these are Repository Segment design requirements.
3.2.2.8	Not allocated to the Engineered Barrier Segment, these are Repository Segment design requirements.
3.2.3.1.A	Not allocated to the Engineered Barrier Segment, these are Site Segment and Repository Segment design requirements.
3.2.3.1.B	3.2.3.2 These are also Site Segment and Repository Segment design requirements.

MGDS-RD TRACEABILITY MATRIX	
MGDS-RD PARAGRAPH	EB-DRD PARAGRAPH
3.2.3.2.1.A	Not allocated to the Engineered Barrier Segment, these are Repository Segment design requirements.
3.2.3.2.1.B	Not allocated to the Engineered Barrier Segment, these are Repository Segment design requirements.
3.2.3.2.2.A.1	3.2.3.4.C.1.a 3.2.3.4.C.1.b 3.2.3.4.C.1.c 3.2.3.4.C.1.d 3.2.3.4.C.1.e 3.2.3.4.C.1.f These are also Repository Segment design requirements.
3.2.3.2.2.A.2	3.2.3.4.D These are also Repository Segment design requirements.
3.2.3.2.2.A.3	3.2.3.4.E These are also Repository Segment design requirements.
3.2.3.2.2.B.1	3.2.3.4.A.1 These are also Repository Segment design requirements.
3.2.3.2.2.B.2	3.2.3.4.B These are also Repository Segment design requirements.
3.2.3.2.2.C	3.2.3.3.A.6 These are also Repository Segment design requirements.
3.2.3.2.2.D	3.2.3.3.A.7 These are also Repository Segment design requirements.
3.2.3.2.2.E	Not allocated to the Engineered Barrier Segment, these are Repository Segment design requirements.
3.2.3.2.3.A	Not allocated to the Engineered Barrier Segment, these are Repository Segment design requirements.
3.2.3.2.3.B	Not allocated to the Engineered Barrier Segment, these are Repository Segment design requirements.
3.2.3.2.3.C	Not allocated to the Engineered Barrier Segment, these are Repository Segment design requirements.
3.2.3.2.3.D	Not allocated to the Engineered Barrier Segment, these are Repository Segment design requirements.
3.2.3.2.3.E	Not allocated to the Engineered Barrier Segment, these are Repository Segment design requirements.
3.2.3.2.3.F	Not allocated to the Engineered Barrier Segment, these are Repository Segment design requirements.
3.2.3.2.3.G	Not allocated to the Engineered Barrier Segment, these are Repository Segment design requirements.

MGDS-RD TRACEABILITY MATRIX	
MGDS-RD PARAGRAPH	EB-DRD PARAGRAPH
3.2.3.2.3.H	Not allocated to the Engineered Barrier Segment, these are Repository Segment design requirements.
3.2.3.2.3.I	Not allocated to the Engineered Barrier Segment, these are Repository Segment design requirements.
3.2.4	3.2.4 These are also Site Segment and Repository Segment design requirements.
3.2.4.1	3.2.4.1 These are also Site Segment and Repository Segment design requirements.
3.2.4.2.1	Not allocated to the Engineered Barrier Segment, these are Site Segment and Repository Segment design requirements.
3.2.4.2.2	Not allocated to the Engineered Barrier Segment, these are Site Segment and Repository Segment design requirements.
3.2.4.2.3	Not allocated to the Engineered Barrier Segment, these are Site Segment and Repository Segment design requirements.
3.2.4.2.4	Not allocated to the Engineered Barrier Segment, these are Site Segment and Repository Segment design requirements.
3.2.4.2.5	Not allocated to the Engineered Barrier Segment, these are Site Segment and Repository Segment design requirements.
3.2.4.2.6	Not allocated to the Engineered Barrier Segment, these are Site Segment and Repository Segment design requirements.
3.2.4.3.1.1	Not allocated to the Engineered Barrier Segment, these are Repository Segment design requirements.
3.2.4.3.1.2A	Not allocated to the Engineered Barrier Segment, these are Repository Segment design requirements.
3.2.4.3.1.2B	Not allocated to the Engineered Barrier Segment, these are Repository Segment design requirements.
3.2.4.3.1.2C	Not allocated to the Engineered Barrier Segment, these are Repository Segment design requirements.
3.2.4.3.1.2D	Not allocated to the Engineered Barrier Segment, these are Repository Segment design requirements.
3.2.4.3.1.2E	Not allocated to the Engineered Barrier Segment, these are Repository Segment design requirements.
3.2.4.3.1.2F	Not allocated to the Engineered Barrier Segment, these are Repository Segment design requirements.
3.2.4.3.1.3A	Not allocated to the Engineered Barrier Segment, these are Repository Segment design requirements.

MGDS-RD TRACEABILITY MATRIX	
MGDS-RD PARAGRAPH	EB-DRD PARAGRAPH
3.2.4.3.1.3B	Not allocated to the Engineered Barrier Segment, these are Repository Segment design requirements.
3.2.4.3.1.3C	Not allocated to the Engineered Barrier Segment, these are Repository Segment design requirements.
3.2.4.3.1.3D	Not allocated to the Engineered Barrier Segment, these are Repository Segment design requirements.
3.2.4.3.1.3E	Not allocated to the Engineered Barrier Segment, these are Repository Segment design requirements.
3.2.4.3.1.4	Not allocated to the Engineered Barrier Segment, these are Repository Segment design requirements.
3.2.4.3.2.A	Not allocated to the Engineered Barrier Segment, these are Repository Segment design requirements.
3.2.4.3.2.B	Not allocated to the Engineered Barrier Segment, these are Repository Segment design requirements.
3.2.4.3.3	Not allocated to the Engineered Barrier Segment, these are Repository Segment design requirements.
3.2.4.4	Not allocated to the Engineered Barrier Segment, these are Repository Segment design requirements.
3.2.4.5.1.A	Not allocated to the Engineered Barrier Segment, these are Repository Segment design requirements.
3.2.4.5.1.B	Not allocated to the Engineered Barrier Segment, these are Repository Segment design requirements.
3.2.4.5.1.C	Not allocated to the Engineered Barrier Segment, these are Repository Segment design requirements.
3.2.4.5.1.D	Not allocated to the Engineered Barrier Segment, these are Repository Segment design requirements.
3.2.4.5.2	Not allocated to the Engineered Barrier Segment, these are Repository Segment design requirements.
3.2.4.6.A	3.2.4.6.A These are also Repository Segment design requirements.
3.2.4.6.B	Not allocated to the Engineered Barrier Segment, these are Repository Segment design requirements.
3.2.4.6.C	Not allocated to the Engineered Barrier Segment, these are Repository Segment design requirements.
3.2.4.6.D	3.2.4.6.B These are also Repository Segment design requirements.
3.2.5.1	3.2.5.1 These are also Repository Segment design requirements.

MGDS-RD TRACEABILITY MATRIX	
MGDS-RD PARAGRAPH	EB-DRD PARAGRAPH
3.2.5.1.1	3.2.5.1.1 These are also Site Segment and Repository Segment design requirements.
3.2.5.1.2	3.2.5.1.2.A These are also Site Segment and Repository Segment design requirements.
3.2.5.1.3	3.2.5.1.3 These are also Site Segment and Repository Segment design requirements.
3.2.5.1.4.A	Not allocated to the Engineered Barrier Segment, these are Site Segment and Repository Segment design requirements.
3.2.5.1.4.B	Not allocated to the Engineered Barrier Segment, these are Repository Segment design requirements.
3.2.5.1.5	3.2.5.1.5 These are also Repository Segment design requirements.
3.2.5.2.1	3.2.5.2.1 These are also Site Segment and Repository Segment design requirements.
3.2.5.2.2.A	Not allocated to the Engineered Barrier Segment, these are Site Segment and Repository Segment design requirements.
3.2.5.2.2.B	Not allocated to the Engineered Barrier Segment, these are Site Segment and Repository Segment design requirements.
3.2.5.2.3	3.2.5.2.3 These are also Site Segment and Repository Segment design requirements.
3.2.5.2.4.A	3.2.5.2.4.A These are also Site Segment and Repository Segment design requirements.
3.2.5.2.4.B	3.2.5.2.4.B These are also Repository Segment design requirements.
3.2.5.2.4.C	3.2.5.2.4.C These are also Repository Segment design requirements.
3.2.5.2.5	3.2.5.2.5 These are also Site Segment and Repository Segment design requirements.
3.2.5.2.6	3.2.5.2.6 These are also Repository Segment design requirements.
3.2.5.2.7	3.2.5.2.7 These are also Site Segment and Repository Segment design requirements.

MGDS-RD TRACEABILITY MATRIX	
MGDS-RD PARAGRAPH	EB-DRD PARAGRAPH
3.2.5.2.8.A	3.2.5.2.8.A These are also Site Segment and Repository Segment design requirements.
3.2.5.2.8.B	3.2.5.2.8.B These are also Repository Segment design requirements.
3.2.5.2.8.C	3.2.5.2.8.C These are also Repository Segment design requirements.
3.2.5.2.8.D	3.2.5.2.8.D These are also Repository Segment design requirements.
3.2.5.2.8.E	3.2.5.2.8.E These are also Repository Segment design requirements.
3.2.5.2.9	3.2.5.2.9 These are also Site Segment and Repository Segment design requirements.
3.2.5.3.A	3.2.5.3.A These are also Site Segment and Repository Segment design requirements.
3.2.5.3.B	3.2.5.3.B These are also Repository Segment design requirements.
3.2.5.4.A	Not allocated to the Engineered Barrier Segment, these are Repository Segment design requirements.
3.2.5.4.B	3.2.5.4 These are also Site Segment and Repository Segment design requirements.
3.2.5.5.A	3.2.5.5.A These are also Site Segment and Repository Segment design requirements.
3.2.5.5.B	3.2.5.5.B Not allocated to the Engineered Barrier Segment, these are Repository Segment design requirements.
3.2.6.1	Not allocated to the Engineered Barrier Segment, these are Repository Segment design requirements.
3.2.6.1.A	3.2.6.1.B These are also Site Segment and Repository Segment design requirements.
3.2.6.1.B	3.2.6.1.B These are also Site Segment and Repository Segment design requirements.

MGDS-RD TRACEABILITY MATRIX	
MGDS-RD PARAGRAPH	EB-DRD PARAGRAPH
3.2.6.1.C	3.2.6.1.C These are also Site Segment and Repository Segment design requirements.
3.2.6.1.D	Not allocated to the Engineered Barrier Segment, these are Repository Segment design requirements.
3.2.6.1.E.1	Not allocated to the Engineered Barrier Segment, these are Site Segment and Repository Segment design requirements.
3.2.6.1.E.2	Not allocated to the Engineered Barrier Segment, these are Site Segment and Repository Segment design requirements.
3.2.6.1.E.3.a	Not allocated to the Engineered Barrier Segment, these are Repository Segment design requirements.
3.2.6.1.E.3.b	Not allocated to the Engineered Barrier Segment, these are Repository Segment design requirements.
3.2.6.1.E.3.c	Not allocated to the Engineered Barrier Segment, these are Repository Segment design requirements.
3.2.6.1.E.4	Not allocated to the Engineered Barrier Segment, these are Repository Segment design requirements.
3.2.6.1.F	Not allocated to the Engineered Barrier Segment, these are Repository Segment design requirements.
3.2.6.1.G.1	Not allocated to the Engineered Barrier Segment, these are Site Segment and Repository Segment design requirements.
3.2.6.1.G.2	Not allocated to the Engineered Barrier Segment, these are Site Segment and Repository Segment design requirements.
3.2.6.1.H.1	Not allocated to the Engineered Barrier Segment, these are Site Segment and Repository Segment design requirements.
3.2.6.1.H.2	Not allocated to the Engineered Barrier Segment, these are Repository Segment design requirements.
3.2.6.1.I	3.2.6.1.D These are also Site Segment and Repository Segment design requirements.
3.2.6.1.J	Not allocated to the Engineered Barrier Segment, these are Site Segment and Repository Segment design requirements.
3.2.6.2.1.A	Not allocated to the Engineered Barrier Segment, these are Repository Segment design requirements.
3.2.6.2.1.B	Not allocated to the Engineered Barrier Segment, these are Repository Segment design requirements.
3.2.6.2.1.C	Not allocated to the Engineered Barrier Segment, these are Site Segment and Repository Segment design requirements.

MGDS-RD TRACEABILITY MATRIX	
MGDS-RD PARAGRAPH	EB-DRD PARAGRAPH
3.2.6.2.2.A	Not allocated to the Engineered Barrier Segment, these are Repository Segment design requirements.
3.2.6.2.2.B	Not allocated to the Engineered Barrier Segment, these are Repository Segment design requirements.
3.2.6.2.2.C	Not allocated to the Engineered Barrier Segment, these are Repository Segment design requirements.
3.2.6.2.2.D	Not allocated to the Engineered Barrier Segment, these are Repository Segment design requirements.
3.2.6.2.3	3.2.6.2.3 These are also Site Segment and Repository Segment design requirements.
3.2.6.2.4	3.2.6.2.4 These are also Site Segment and Repository Segment design requirements.
3.2.6.2.5	Not allocated to the Engineered Barrier Segment, these are Repository Segment design requirements.
3.2.7	3.2.7 These are also Site Segment and Repository Segment design requirements.
3.2.8	3.2.8 These are also Site Segment and Repository Segment design requirements.
3.2.9	3.2.9 These are also Site Segment and Repository Segment design requirements.
3.3.1.A	3.3.1.B These are also Site Segment and Repository Segment design requirements.
3.3.1.B	3.3.1.C These are also Site Segment and Repository Segment design requirements.
3.3.1.C	3.3.1.D These are also Site Segment and Repository Segment design requirements.
3.3.1.D	3.3.1.E These are also Site Segment and Repository Segment design requirements.
3.3.1.E	3.3.1.F These are also Site Segment and Repository Segment design requirements.

MGDS-RD TRACEABILITY MATRIX	
MGDS-RD PARAGRAPH	EB-DRD PARAGRAPH
3.3.1.F	3.3.1.G These are also Repository Segment design requirements.
3.3.1.G	3.3.1.H These are also Site Segment and Repository Segment design requirements.
3.3.2.A	Not allocated to the Engineered Barrier Segment, these are Site Segment and Repository Segment design requirements.
3.3.2.B	Not allocated to the Engineered Barrier Segment, these are Site Segment and Repository Segment design requirements.
3.3.2.C	Not allocated to the Engineered Barrier Segment, these are Site Segment and Repository Segment design requirements.
3.3.2.D	Not allocated to the Engineered Barrier Segment, these are Site Segment and Repository Segment design requirements.
3.3.3.A	3.3.3.A These are also Site Segment and Repository Segment design requirements.
3.3.3.B	3.3.3.B These are also Site Segment and Repository Segment design requirements.
3.3.3.C	3.3.3.C These are also Site Segment and Repository Segment design requirements.
3.3.3.D	3.3.3.D These are also Site Segment and Repository Segment design requirements.
3.3.3.E	3.3.3.E These are also Site Segment and Repository Segment design requirements.
3.3.3.F	3.3.3.F These are also Site Segment and Repository Segment design requirements.
3.3.4.A	3.3.4.A These are also Site Segment and Repository Segment design requirements.
3.3.4.B	3.3.4.B These are also Site Segment and Repository Segment design requirements.
3.3.5	3.3.5 These are also Site Segment and Repository Segment design requirements.

MGDS-RD TRACEABILITY MATRIX	
MGDS-RD PARAGRAPH	EB-DRD PARAGRAPH
3.3.6.1.A	3.3.6.1.A These are also Site Segment and Repository Segment design requirements.
3.3.6.1.B	3.3.6.1.B These are also Site Segment and Repository Segment design requirements.
3.3.6.2.A	3.3.6.2.A These are also Site Segment and Repository Segment design requirements.
3.3.6.2.B	3.3.6.2.B These are also Site Segment and Repository Segment design requirements.
3.3.6.2.C	3.3.6.2.C These are also Site Segment and Repository Segment design requirements.
3.3.6.2.D	3.3.6.2.D These are also Site Segment and Repository Segment design requirements.
3.3.6.2.E.1	Not allocated to the Engineered Barrier Segment, these are Site Segment and Repository Segment design requirements.
3.3.6.2.E.2	3.3.6.2.E.2 These are also Site Segment and Repository Segment design requirements.
3.3.6.3.A.1	Not allocated to the Engineered Barrier Segment, these are Site Segment and Repository Segment design requirements.
3.3.6.3.A.2	Not allocated to the Engineered Barrier Segment, these are Site Segment and Repository Segment design requirements.
3.3.6.3.A.3	Not allocated to the Engineered Barrier Segment, these are Site Segment and Repository Segment design requirements.
3.3.6.3.A.4	Not allocated to the Engineered Barrier Segment, these are Site Segment and Repository Segment design requirements.
3.3.6.3.B	Note allocated to the Engineered Barrier Segment, these are Site Segment and Repository Segment design requirements.
3.3.6.3.C	Not allocated to the Engineered Barrier Segment, these are Site Segment and Repository Segment design requirements.
3.3.6.3.D	Not allocated to the Engineered Barrier Segment, these are Site Segment and Repository Segment design requirements.
3.3.6.3.E	3.3.6.3 These are also Site Segment and Repository Segment design requirements.

MGDS-RD TRACEABILITY MATRIX	
MGDS-RD PARAGRAPH	EB-DRD PARAGRAPH
3.3.6.3.F	Not allocated to the Engineered Barrier Segment. these are Site Segment and Repository Segment design requirements.
3.3.6.3.G	Not allocated to the Engineered Barrier Segment, these are Repository Segment design requirements.
3.3.6.4.A	Not allocated to the Engineered Barrier Segment. these are Site Segment and Repository Segment design requirements.
3.3.6.4.B	Not allocated to the Engineered Barrier Segment, these are Site Segment and Repository Segment design requirements.
3.3.6.4.C	Not allocated to the Engineered Barrier Segment. these are Site Segment and Repository Segment design requirements.
3.3.6.4.D	Not allocated to the Engineered Barrier Segment. these are Site Segment and Repository Segment design requirements.
3.3.6.4.E	Not allocated to the Engineered Barrier Segment, these are Site Segment and Repository Segment design requirements.
3.3.6.5	3.3.6.5 These are also Site Segment and Repository Segment design requirements.
3.3.6.6.A	3.3.6.6.A These are also Site Segment and Repository Segment design requirements.
3.3.6.6.B	Not allocated to the Engineered Barrier Segment, these are Site Segment and Repository Segment design requirements.
3.3.6.6.C	3.3.6.6.B These are also Site Segment and Repository Segment design requirements.
3.3.6.7.A	Not allocated to the Engineered Barrier Segment, these are Site Segment and Repository Segment design requirements.
3.3.6.7.B	Not allocated to the Engineered Barrier Segment, these are Site Segment and Repository Segment design requirements.
3.3.6.7.C	Not allocated to the Engineered Barrier Segment, these are Repository Segment design requirements.
3.3.6.8.A	3.3.6.8.A These are also Site Segment and Repository Segment design requirements.
3.3.6.8.B	3.3.6.8.B These are also Site Segment and Repository Segment design requirements.
3.3.6.8.C	Not allocated to the Engineered Barrier Segment, these are Site Segment and Repository Segment design requirements.

MGDS-RD TRACEABILITY MATRIX	
MGDS-RD PARAGRAPH	EB-DRD PARAGRAPH
3.3.6.8.D	Not allocated to the Engineered Barrier Segment, these are Site Segment and Repository Segment design requirements.
3.3.6.8.E	Not allocated to the Engineered Barrier Segment, these are Site Segment and Repository Segment design requirements.
3.3.6.8.F	Not allocated to the Engineered Barrier Segment, these are Site Segment and Repository Segment design requirements.
3.3.6.9.A	Not allocated to the Engineered Barrier Segment, these are Repository Segment design requirements.
3.3.6.9.B	Not allocated to the Engineered Barrier Segment, these are Repository Segment design requirements.
3.3.6.9.C	Not allocated to the Engineered Barrier Segment, these are Repository Segment design requirements.
3.3.6.9.D	Not allocated to the Engineered Barrier Segment, these are Repository Segment design requirements.
3.3.6.9.E	Not allocated to the Engineered Barrier Segment, these are Repository Segment design requirements.
3.3.6.10.A	Not allocated to the Engineered Barrier Segment, these are Site Segment and Repository Segment design requirements.
3.3.6.10.B	Not allocated to the Engineered Barrier Segment, these are Site Segment and Repository Segment design requirements.
3.3.6.11.A	Not allocated to the Engineered Barrier Segment, these are Site Segment and Repository Segment design requirements.
3.3.6.11.B	Not allocated to the Engineered Barrier Segment, these are Site Segment and Repository Segment design requirements.
3.3.6.11.C	Not allocated to the Engineered Barrier Segment, these are Site Segment and Repository Segment design requirements.
3.3.7.1	Not allocated to the Engineered Barrier Segment, these are Repository Segment design requirements.
3.3.7.2	Not allocated to the Engineered Barrier Segment, these are Repository Segment design requirements.
3.3.7.3	Not allocated to the Engineered Barrier Segment, these are Repository Segment design requirements.
3.3.7.4	Not allocated to the Engineered Barrier Segment, these are Repository Segment design requirements.
3.3.7.5	Not allocated to the Engineered Barrier Segment, these are Repository Segment design requirements.
3.3.7.6	Not allocated to the Engineered Barrier Segment, these are Repository Segment design requirements.

MGDS-RD TRACEABILITY MATRIX	
MGDS-RD PARAGRAPH	EB-DRD PARAGRAPH
3.3.7.7	Not allocated to the Engineered Barrier Segment, these are Repository Segment design requirements.
3.3.7.8	Not allocated to the Engineered Barrier Segment, these are Repository Segment design requirements.
3.3.7.9	Not allocated to the Engineered Barrier Segment, these are Site Segment and Repository Segment design requirements.
3.3.7.10	Not allocated to the Engineered Barrier Segment, these are Site Segment and Repository Segment design requirements.
3.3.7.11	3.3.7 These are also Site Segment and Repository Segment design requirements.
3.3.7.12	Not allocated to the Engineered Barrier Segment, these are Site Segment and Repository Segment design requirements.
3.3.7.13	Not allocated to the Engineered Barrier Segment, these are Repository Segment design requirements.
3.3.7.13.A	Not allocated to the Engineered Barrier Segment, these are Site Segment and Repository Segment design requirements.
3.3.7.13.B	Not allocated to the Engineered Barrier Segment, these are Site Segment and Repository Segment design requirements.
3.3.7.14	Not allocated to the Engineered Barrier Segment, these are Site Segment and Repository Segment design requirements.
3.3.8.1.A	3.3.8.1.A These are also Repository Segment design requirements.
3.3.8.1.B	3.3.8.1.B These are also Repository Segment design requirements.
3.3.8.1.C	3.3.8.1.C These are also Repository Segment design requirements.
3.3.8.1.D	3.3.8.1.D These are also Repository Segment design requirements.
3.3.8.2.A	Not allocated to the Engineered Barrier Segment, these are Repository Segment design requirements.
3.3.8.2.B	Not allocated to the Engineered Barrier Segment, these are Repository Segment design requirements.
3.3.8.2.C	Not allocated to the Engineered Barrier Segment, these are Repository Segment design requirements.
3.3.9.A	Not allocated to the Engineered Barrier Segment, these are Site Segment and Repository Segment design requirements.

MGDS-RD TRACEABILITY MATRIX	
MGDS-RD PARAGRAPH	EB-DRD PARAGRAPH
3.3.9.B	3.3.9.A These are also Site Segment and Repository Segment design requirements.
3.3.9.C	3.3.9.B These are also Site Segment and Repository Segment design requirements.
3.3.10.A	Not allocated to the Engineered Barrier Segment, these are Site Segment and Repository Segment design requirements.
3.3.10.B	Not allocated to the Engineered Barrier Segment, these are Site Segment and Repository Segment design requirements.
3.3.11.A	Not allocated to the Engineered Barrier Segment, these are Site Segment and Repository Segment design requirements.
3.3.11.B	3.3.11 These are Site Segment and Repository Segment design requirements.
3.3.11.2.A	Not allocated to the Engineered Barrier Segment, these are Repository Segment design requirements.
3.3.11.2.B	Not allocated to the Engineered Barrier Segment, these are Repository Segment design requirements.
3.3.11.3.A.1	Not allocated to the Engineered Barrier Segment, these are Repository Segment design requirements.
3.3.11.3.A.2	Not allocated to the Engineered Barrier Segment, these are Repository Segment design requirements.
3.3.11.3.A.3	Not allocated to the Engineered Barrier Segment, these are Repository Segment design requirements.
3.3.11.3.A.4	Not allocated to the Engineered Barrier Segment, these are Repository Segment design requirements.
3.3.11.3.A.5	Not allocated to the Engineered Barrier Segment, these are Repository Segment design requirements.
3.3.11.3.B	Not allocated to the Engineered Barrier Segment, these are Repository Segment design requirements.
3.3.11.4.A	Not allocated to the Engineered Barrier Segment, these are Repository Segment design requirements.
3.3.11.4.B	Not allocated to the Engineered Barrier Segment, these are Repository Segment design requirements.
3.3.11.5	Not allocated to the Engineered Barrier Segment, these are Repository Segment design requirements.
3.3.11.6	Not allocated to the Engineered Barrier Segment, these are Repository Segment design requirements.

MGDS-RD TRACEABILITY MATRIX	
MGDS-RD PARAGRAPH	EB-DRD PARAGRAPH
3.3.11.7	Not allocated to the Engineered Barrier Segment. these are Repository Segment design requirements.
3.3.11.8	Not allocated to the Engineered Barrier Segment, these are Repository Segment design requirements.
3.3.11.9	Not allocated to the Engineered Barrier Segment, these are Repository Segment design requirements.
3.4.1.B	3.4.1.A These are also Site Segment and Repository Segment design requirements.
3.4.1.C	3.4.1.B These are also Site Segment and Repository Segment design requirements.
3.4.2	3.4.2 These are also Site Segment and Repository Segment design requirements.
3.4.3	3.4.3 These are also Site Segment and Repository Segment design requirements.
3.4.4	3.4.4 These are also Site Segment and Repository Segment design requirements.
3.4.5	3.4.5 These are also Site Segment and Repository Segment design requirements.
3.4.6.A	3.4.6.A These are also Repository Segment design requirements.
3.4.6.B	3.4.6.B These are also Repository Segment design requirements.
3.4.7	3.4.7 These are also Site Segment and Repository Segment design requirements.
3.4.8	Not allocated to the Engineered Barrier Segment. these are Site Segment and Repository Segment design requirements.
3.5.1	3.5.1 These are also Site Segment and Repository Segment design requirements.
3.5.1.1.1.A	3.5.1.1.1.A These are also Site Segment and Repository Segment design requirements.

MGDS-RD TRACEABILITY MATRIX	
MGDS-RD PARAGRAPH	EB-DRD PARAGRAPH
3.5.1.1.1.B	3.5.1.1.1.B These are also Site Segment and Repository Segment design requirements.
3.5.1.1.1.C	3.5.1.1.1.C These are also Site Segment and Repository Segment design requirements.
3.5.1.1.1.D	3.5.1.1.1.D These are also Site Segment and Repository Segment design requirements.
3.5.1.1.1.E	3.5.1.1.1.E These are also Site Segment and Repository Segment design requirements.
3.5.1.1.2.A	3.5.1.1.2 These are also Site Segment and Repository Segment design requirements.
3.5.1.1.2.B	Not allocated to the Engineered Barrier Segment, these are Site Segment and Repository Segment design requirements.
3.5.1.1.3	3.5.1.1.3 These are also Site Segment and Repository Segment design requirements.
3.5.1.2.A	Not allocated to the Engineered Barrier Segment, these are Repository Segment design requirements.
3.5.1.2.B	Not allocated to the Engineered Barrier Segment, these are Repository Segment design requirements.
3.5.1.3	Not allocated to the Engineered Barrier Segment, these are Repository Segment design requirements.
3.5.1.4.A	3.5.1.4.A These are also Site Segment and Repository Segment design requirements.
3.5.1.4.B	3.5.1.4.B These are also Site Segment and Repository Segment design requirements.
3.5.1.5	Not allocated to the Engineered Barrier Segment, these are Site Segment and Repository Segment design requirements.
3.5.2	3.5.2 These are also Site Segment and Repository Segment design requirements.
3.5.3.1	Not allocated to the Engineered Barrier Segment, these are Site Segment and Repository Segment design requirements.

MGDS-RD TRACEABILITY MATRIX	
MGDS-RD PARAGRAPH	EB-DRD PARAGRAPH
3.5.3.2.A	Not allocated to the Engineered Barrier Segment, these are Site Segment and Repository Segment design requirements.
3.5.3.2.B	Not allocated to the Engineered Barrier Segment, these are Site Segment and Repository Segment design requirements.
3.5.3.3	Not allocated to the Engineered Barrier Segment, these are Repository Segment design requirements.
3.5.3.4	Not allocated to the Engineered Barrier Segment, these are Repository Segment design requirements.
3.5.3.5	Not allocated to the Engineered Barrier Segment, these are Repository Segment design requirements.
3.5.4	3.5.4 These are also Site Segment and Repository Segment design requirements.
3.6.1.A	3.6.1.A These are also Site Segment and Repository Segment design requirements.
3.6.1.C	3.6.1.B These are also Site Segment and Repository Segment design requirements.
3.6.2	3.6.2 These are also Site Segment and Repository Segment design requirements.
3.6.2.1.A	3.6.2.1.A These are also Site Segment and Repository Segment design requirements.
3.6.2.1.B	3.6.2.1.B These are also Site Segment and Repository Segment design requirements.
3.6.2.1.B.1	Not allocated to the Engineered Barrier Segment, these are Repository Segment design requirements.
3.6.2.1.B.2	Not allocated to the Engineered Barrier Segment, these are Repository Segment design requirements.
3.6.2.1.B.3	Not allocated to the Engineered Barrier Segment, these are Repository Segment design requirements.
3.6.2.1.B.4	Not allocated to the Engineered Barrier Segment, these are Repository Segment design requirements.
3.6.2.1.B.5	Not allocated to the Engineered Barrier Segment, these are Repository Segment design requirements.

MGDS-RD TRACEABILITY MATRIX	
MGDS-RD PARAGRAPH	EB-DRD PARAGRAPH
3.6.2.1.C	Not allocated to the Engineered Barrier Segment. these are Site Segment and Repository Segment design requirements.
3.6.2.2.A	Not allocated to the Engineered Barrier Segment, these are Repository Segment design requirements.
3.7.1.1.A	Not allocated to the Engineered Barrier Segment, these are Site Segment design requirements.
3.7.1.1.B	Not allocated to the Engineered Barrier Segment, these are Site Segment design requirements.
3.7.1.2	Not allocated to the Engineered Barrier Segment, these are Site Segment design requirements.
3.7.1.3.A	Not allocated to the Engineered Barrier Segment, these are Site Segment design requirements.
3.7.1.3.B.1	Not allocated to the Engineered Barrier Segment, these are Site Segment design requirements.
3.7.1.3.B.2	Not allocated to the Engineered Barrier Segment, these are Site Segment design requirements.
3.7.1.3.B.3	Not allocated to the Engineered Barrier Segment, these are Site Segment design requirements.
3.7.1.3.C	Not allocated to the Engineered Barrier Segment, these are Site Segment design requirements.
3.7.2	Not allocated to the Engineered Barrier Segment, these are Repository Segment design requirements.
3.7.2.1.A	Not allocated to the Engineered Barrier Segment, these are Repository Segment design requirements.
3.7.2.1.B	Not allocated to the Engineered Barrier Segment, these are Repository Segment design requirements.
3.7.2.1.C	Not allocated to the Engineered Barrier Segment, these are Repository Segment design requirements.
3.7.2.2.A	3.2.3.1.B These are also Repository Segment design requirements.
3.7.2.2.B	3.2.3.1.A.1 These are also Repository Segment design requirements.
3.7.2.2.C	Not allocated to the Engineered Barrier Segment, these are Repository Segment design requirements.
3.7.2.2.D	Not allocated to the Engineered Barrier Segment, these are Repository Segment design requirements.
3.7.2.2.E	Not allocated to the Engineered Barrier Segment, these are Repository Segment design requirements.

MGDS-RD TRACEABILITY MATRIX	
MGDS-RD PARAGRAPH	EB-DRD PARAGRAPH
3.7.2.3.A	Not allocated to the Engineered Barrier Segment, these are Repository Segment design requirements.
3.7.2.3.B.1	Not allocated to the Engineered Barrier Segment, these are Repository Segment design requirements.
3.7.2.3.B.2	Not allocated to the Engineered Barrier Segment, these are Repository Segment design requirements.
3.7.2.3.B.3	Not allocated to the Engineered Barrier Segment, these are Repository Segment design requirements.
3.7.2.3.C.1	Not allocated to the Engineered Barrier Segment, these are Repository Segment design requirements.
3.7.2.3.C.2	Not allocated to the Engineered Barrier Segment, these are Repository Segment design requirements.
3.7.2.3.D.1	Not allocated to the Engineered Barrier Segment, these are Repository Segment design requirements.
3.7.2.3.D.2	Not allocated to the Engineered Barrier Segment, these are Repository Segment design requirements.
3.7.2.3.E	Not allocated to the Engineered Barrier Segment, these are Repository Segment design requirements.
3.7.2.3.F	Not allocated to the Engineered Barrier Segment, these are Repository Segment design requirements.
3.7.2.4	Not allocated to the Engineered Barrier Segment, these are Repository Segment design requirements.
3.7.2.4.1.A	Not allocated to the Engineered Barrier Segment, these are Repository Segment design requirements.
3.7.2.4.1.B	Not allocated to the Engineered Barrier Segment, these are Repository Segment design requirements.
3.7.2.4.1.C	Not allocated to the Engineered Barrier Segment, these are Repository Segment design requirements.
3.7.2.4.1.D	Not allocated to the Engineered Barrier Segment, these are Repository Segment design requirements.
3.7.2.4.2.A	Not allocated to the Engineered Barrier Segment, these are Repository Segment design requirements.
3.7.2.4.2.B	Not allocated to the Engineered Barrier Segment, these are Repository Segment design requirements.
3.7.2.4.2.C	Not allocated to the Engineered Barrier Segment, these are Repository Segment design requirements.
3.7.2.4.3.A	Not allocated to the Engineered Barrier Segment, these are Repository Segment design requirements.

MGDS-RD TRACEABILITY MATRIX	
MGDS-RD PARAGRAPH	EB-DRD PARAGRAPH
3.7.2.4.3.B	Not allocated to the Engineered Barrier Segment, these are Repository Segment design requirements.
3.7.2.4.3.C	Not allocated to the Engineered Barrier Segment, these are Repository Segment design requirements.
3.7.2.4.3.D	Not allocated to the Engineered Barrier Segment, these are Repository Segment design requirements.
3.7.2.4.3.F	Not allocated to the Engineered Barrier Segment, these are Repository Segment design requirements.
3.7.2.4.3.G	Not allocated to the Engineered Barrier Segment, these are Repository Segment design requirements.
3.7.2.4.3.H	Not allocated to the Engineered Barrier Segment, these are Repository Segment design requirements.
3.7.2.4.4.A	Not allocated to the Engineered Barrier Segment, these are Repository Segment design requirements.
3.7.2.4.4.B	Not allocated to the Engineered Barrier Segment, these are Repository Segment design requirements.
3.7.2.4.5	Not allocated to the Engineered Barrier Segment, these are Repository Segment design requirements.
3.7.2.4.6.B	Not allocated to the Engineered Barrier Segment, these are Repository Segment design requirements.
3.7.2.4.6.C	Not allocated to the Engineered Barrier Segment, these are Repository Segment design requirements.
3.7.2.4.7.A	Not allocated to the Engineered Barrier Segment, these are Repository Segment design requirements.
3.7.2.4.7.B	Not allocated to the Engineered Barrier Segment, these are Repository Segment design requirements.
3.7.2.4.8.A	Not allocated to the Engineered Barrier Segment, these are Repository Segment design requirements.
3.7.2.4.8.B	Not allocated to the Engineered Barrier Segment, these are Repository Segment design requirements.
3.7.2.5.1.A.1	Not allocated to the Engineered Barrier Segment, these are Repository Segment design requirements.
3.7.2.5.1.A.2	Not allocated to the Engineered Barrier Segment, these are Repository Segment design requirements.
3.7.2.5.1.B	Not allocated to the Engineered Barrier Segment, these are Repository Segment design requirements.
3.7.2.5.1.C	Not allocated to the Engineered Barrier Segment, these are Repository Segment design requirements.

MGDS-RD TRACEABILITY MATRIX	
MGDS-RD PARAGRAPH	EB-DRD PARAGRAPH
3.7.2.5.2.A	Not allocated to the Engineered Barrier Segment, these are Repository Segment design requirements.
3.7.2.5.2.B	Not allocated to the Engineered Barrier Segment, these are Repository Segment design requirements.
3.7.2.5.2.C	Not allocated to the Engineered Barrier Segment, these are Repository Segment design requirements.
3.7.2.5.2.D	Not allocated to the Engineered Barrier Segment, these are Repository Segment design requirements.
3.7.2.5.2.E	Not allocated to the Engineered Barrier Segment, these are Repository Segment design requirements.
3.7.2.5.2.F	Not allocated to the Engineered Barrier Segment, these are Repository Segment design requirements.
3.7.2.5.4.A	Not allocated to the Engineered Barrier Segment, these are Repository Segment design requirements.
3.7.2.5.4.B	Not allocated to the Engineered Barrier Segment, these are Repository Segment design requirements.
3.7.2.5.4.C	Not allocated to the Engineered Barrier Segment, these are Repository Segment design requirements.
3.7.2.5.4.D	Not allocated to the Engineered Barrier Segment, these are Repository Segment design requirements.
3.7.2.5.6.A	Not allocated to the Engineered Barrier Segment, these are Repository Segment design requirements.
3.7.2.5.6.B	Not allocated to the Engineered Barrier Segment, these are Repository Segment design requirements.
3.7.2.5.6.C	Not allocated to the Engineered Barrier Segment, these are Repository Segment design requirements.
3.7.2.5.6.D	Not allocated to the Engineered Barrier Segment, these are Repository Segment design requirements.
3.7.2.5.6.E1	Not allocated to the Engineered Barrier Segment, these are Repository Segment design requirements.
3.7.2.5.6.E3	Not allocated to the Engineered Barrier Segment, these are Repository Segment design requirements.
3.7.2.5.6.E4	Not allocated to the Engineered Barrier Segment, these are Repository Segment design requirements.
3.7.2.5.6.F1	Not allocated to the Engineered Barrier Segment, these are Repository Segment design requirements.
3.7.2.5.6.F2	Not allocated to the Engineered Barrier Segment, these are Repository Segment design requirements.

MGDS-RD TRACEABILITY MATRIX	
MGDS-RD PARAGRAPH	EB-DRD PARAGRAPH
3.7.2.5.6.F3	Not allocated to the Engineered Barrier Segment, these are Repository Segment design requirements.
3.7.2.5.6.F4	Not allocated to the Engineered Barrier Segment, these are Repository Segment design requirements.
3.7.2.5.6.F5	Not allocated to the Engineered Barrier Segment, these are Repository Segment design requirements.
3.7.2.5.6.G	Not allocated to the Engineered Barrier Segment, these are Repository Segment design requirements.
3.7.2.5.6.H	Not allocated to the Engineered Barrier Segment, these are Repository Segment design requirements.
3.7.2.5.6.I1	Not allocated to the Engineered Barrier Segment, these are Repository Segment design requirements.
3.7.2.5.6.I2	Not allocated to the Engineered Barrier Segment, these are Repository Segment design requirements.
3.7.2.5.6.I3	Not allocated to the Engineered Barrier Segment, these are Repository Segment design requirements.
3.7.2.5.6.J1	Not allocated to the Engineered Barrier Segment, these are Repository Segment design requirements.
3.7.2.5.6.J2	Not allocated to the Engineered Barrier Segment, these are Repository Segment design requirements.
3.7.2.5.6.K	Not allocated to the Engineered Barrier Segment, these are Repository Segment design requirements.
3.7.2.5.6.L.1	Not allocated to the Engineered Barrier Segment, these are Repository Segment design requirements.
3.7.2.5.6.L.2	Not allocated to the Engineered Barrier Segment, these are Repository Segment design requirements.
3.7.2.6.A	Not allocated to the Engineered Barrier Segment, these are Repository Segment design requirements.
3.7.2.6.B	Not allocated to the Engineered Barrier Segment, these are Repository Segment design requirements.
3.7.2.6.C	Not allocated to the Engineered Barrier Segment, these are Repository Segment design requirements.
3.7.2.6.D	Not allocated to the Engineered Barrier Segment, these are Repository Segment design requirements.
3.7.2.6.E.1	Not allocated to the Engineered Barrier Segment, these are Repository Segment design requirements.
3.7.2.6.E.2	Not allocated to the Engineered Barrier Segment, these are Repository Segment design requirements.

MGDS-RD TRACEABILITY MATRIX	
MGDS-RD PARAGRAPH	EB-DRD PARAGRAPH
3.7.2.6.F.1	Not allocated to the Engineered Barrier Segment, these are Repository Segment design requirements.
3.7.2.6.F.2	Not allocated to the Engineered Barrier Segment, these are Repository Segment design requirements.
3.7.2.6.F.3	Not allocated to the Engineered Barrier Segment, these are Repository Segment design requirements.
3.7.2.6.F.4	Not allocated to the Engineered Barrier Segment, these are Repository Segment design requirements.
3.7.2.6.F.5	Not allocated to the Engineered Barrier Segment, these are Repository Segment design requirements.
3.7.2.6.F.6	Not allocated to the Engineered Barrier Segment, these are Repository Segment design requirements.
3.7.2.6.F.7	Not allocated to the Engineered Barrier Segment, these are Repository Segment design requirements.
3.7.2.6.G.1	Not allocated to the Engineered Barrier Segment, these are Repository Segment design requirements.
3.7.2.6.G.2	3.2.3.3.A.15 These are also Repository Segment design requirements.
3.7.2.6.H	Not allocated to the Engineered Barrier Segment, these are Repository Segment design requirements.
3.7.2.6.I	Not allocated to the Engineered Barrier Segment, these are Repository Segment design requirements.
3.7.2.6.J.1	Not allocated to the Engineered Barrier Segment, these are Repository Segment design requirements.
3.7.2.6.J.2	Not allocated to the Engineered Barrier Segment, these are Repository Segment design requirements.
3.7.2.6.J.3	Not allocated to the Engineered Barrier Segment, these are Repository Segment design requirements.
3.7.2.6.K	3.2.3.3.A.3 These are also Repository Segment design requirements.
3.7.2.6.L.1	Not allocated to the Engineered Barrier Segment, these are Repository Segment design requirements.
3.7.2.6.L.2	Not allocated to the Engineered Barrier Segment, these are Repository Segment design requirements.
3.7.2.6.L.3	Not allocated to the Engineered Barrier Segment, these are Repository Segment design requirements.
3.7.2.6.L.4	Not allocated to the Engineered Barrier Segment, these are Repository Segment design requirements.

MGDS-RD TRACEABILITY MATRIX	
MGDS-RD PARAGRAPH	EB-DRD PARAGRAPH
3.7.2.6.M	Not allocated to the Engineered Barrier Segment, these are Repository Segment design requirements.
3.7.2.7.A.1	Not allocated to the Engineered Barrier Segment, these are Repository Segment design requirements.
3.7.2.7.A.2	Not allocated to the Engineered Barrier Segment, these are Repository Segment design requirements.
3.7.2.7.A.3	Not allocated to the Engineered Barrier Segment, these are Repository Segment design requirements.
3.7.2.7.A.4	Not allocated to the Engineered Barrier Segment, these are Repository Segment design requirements.
3.7.2.7.A.5	Not allocated to the Engineered Barrier Segment, these are Repository Segment design requirements.
3.7.2.7.A.6	Not allocated to the Engineered Barrier Segment, these are Repository Segment design requirements.
3.7.2.7.B	Not allocated to the Engineered Barrier Segment, these are Repository Segment design requirements.
3.7.2.7.C	Not allocated to the Engineered Barrier Segment, these are Repository Segment design requirements.
3.7.2.7.D	3.2.3.3.B.5.a These are also Repository Segment design requirements.
3.7.2.7.E	Not allocated to the Engineered Barrier Segment, these are Repository Segment design requirements.
3.7.2.7.F	Not allocated to the Engineered Barrier Segment, these are Repository Segment design requirements.
3.7.2.7.G	Not allocated to the Engineered Barrier Segment, these are Repository Segment design requirements.
3.7.2.8.A	Not allocated to the Engineered Barrier Segment, these are Repository Segment design requirements.
3.7.2.8.B	Not allocated to the Engineered Barrier Segment, These are Repository Segment design requirements.
3.7.2.8.C	Not allocated to the Engineered Barrier Segment, these are Repository Segment design requirements.
3.7.2.8.D	Not allocated to the Engineered Barrier Segment, these are Repository Segment design requirements.
3.7.2.8.E	Not allocated to the Engineered Barrier Segment, these are Repository Segment design requirements.
3.7.2.8.F	Not allocated to the Engineered Barrier Segment, these are Repository Segment design requirements.

MGDS-RD TRACEABILITY MATRIX	
MGDS-RD PARAGRAPH	EB-DRD PARAGRAPH
3.7.2.8.G	Not allocated to the Engineered Barrier Segment, these are Repository Segment design requirements.
3.7.3.1.A	3.7
3.7.3.1.B	3.7
3.7.3.1.C	Not allocated to the Engineered Barrier Segment, these are Repository Segment design requirements.
3.7.3.2.A	3.7.A These are also Repository Segment design requirements.
3.7.3.2.B	3.7.B These are also Repository Segment design requirements.
3.7.3.2.C	3.7.D 3.7.1.I 3.7.1.2.B These are also Repository Segment design requirements.
3.7.3.2.D	3.7.E These are also Repository Segment design requirements.
3.7.3.2.E.1	3.2.3.3.A.16.a These are also Repository Segment design requirements.
3.7.3.2.E.2	3.2.3.3.A.16.b These are also Repository Segment design requirements.
3.7.3.2.E.3	3.2.3.3.A.16.c These are also Repository Segment design requirements.
3.7.3.3.A	3.7.1.A 3.7.1.2.G
3.7.3.3.B	3.7.1.B
3.7.3.3.C	3.7.1.C
3.7.3.3.D	3.7.1.D
3.7.3.3.E	3.7.1.E
3.7.3.3.F	3.7.1.F 3.7.1.2.E
3.7.3.3.G.1	3.7.1.1.A
3.7.3.3.G.2	3.7.1.1.B
3.7.3.3.G.3	3.7.1.1.C
3.7.3.3.G.4	3.7.1.1.D
3.7.3.4.A	3.2.3.3.3.A.14 These are also Repository Segment design requirements.

MGDS-RD TRACEABILITY MATRIX	
MGDS-RD PARAGRAPH	EB-DRD PARAGRAPH
3.7.3.4.C	3.7.G These are also Repository Segment design requirements.
3.7.3.4.D	3.2.3.3.A.3 These are also Repository Segment design requirements.
3.8.A	3.8.A These are also Repository Segment design requirements.
3.8.B	3.8.B These are also Repository Segment design requirements.
3.9	3.9 These are also Repository Segment design requirements.
5.2	Not allocated to the Engineered Barrier Segment, these are Repository Segment design requirements.