November 29, 1999

Ms. Wendy R. Dixon
EIS Project Manager
Yucca Mountain Site Characterization Office
Office of Civilian Radioactive Waste Management
U.S. Department of Energy
P.O. Box 30307, Mail Stop 010
North Las Vegas, Nevada 89036-0307

SUBJECT: TRANSMITTAL OF NUREG/BR-0111, "TRANSPORTING SPENT FUEL: PROTECTING AGAINST SEVERE HIGHWAY AND RAILROAD ACCIDENTS"

Dear Ms. Dixon:

We distributed several copies of NUREG/BR-0111 during the U.S. Nuclear Regulatory Commission public meeting in Caliente, Nevada, on November 9, 1999. After the meeting, U.S. Department of Energy staff requested copies of this document and suggested that we direct them to you. Enclosed are two copies of the document.

If you have any questions about this letter or enclosure, I can be reached at (301) 415-6628, or via Internet mail service (jrf@nrc.gov).

Sincerely,

[Original signed by:]

James R. Firth
Systems Performance Analyst
Performance Assessment and Integration Section
High-Level Waste and Performance
Assessment Branch
Division of Waste Management
Office of Nuclear Material Safety and Safeguards

Enclosure: NUREG/BR-0111, "Transporting Spent Fuel: Protection Provided Against Severe Highway and Railroad Accidents"

cc: See distribution list

Distribution: File Center, JHolonich, SWastler, CNWRA, OSR, DWM r/f, HLWB r/f, URLL r/f, CReamer, KStablein, FYoung, DBrooks, MComar

DOCUMENT NAME: S:\DWM\HLWB\JRF\DOEtransportation.wpd

OFC	HLWB		URLL							
NAME	JFirth/jcg JRF		CAbrams							
DATE	11/24/99		11/29/99							

OFFICIAL RECORD COPY

ACNW: YES X **NO** ___ **Delete file after distribution: Yes** ___ **No** X

1) This document should/should not be made available to the PUBLIC JRF 11/24/99
(Initials) (Date)

2) This document is/is not related to the HLW program. If it is related to HLW, it should/should not be placed in the LSS. JRF 11/24/99
(Initials) (Date)

Legacy Mail

U.S. NUCLEAR
REGULATORY
COMMISSION

Transporting Spent Fuel

Protection Provided Against Severe Highway and Railroad Accidents

U.S. DEPARTMENT OF ENERGY
Office of Civilian Radioactive Waste Management
Yucca Mountain Project

Wendy R. Dixon
EIS Project Manager

1551 Hillshire Drive, Suite A
Las Vegas, NV 89134

P.O. Box 30307
N. Las Vegas, NV 89036-0307

Office: (702) 794-5564
Fax: (702) 794-5038
E-Mail: wendy_dixon@ymp.gov

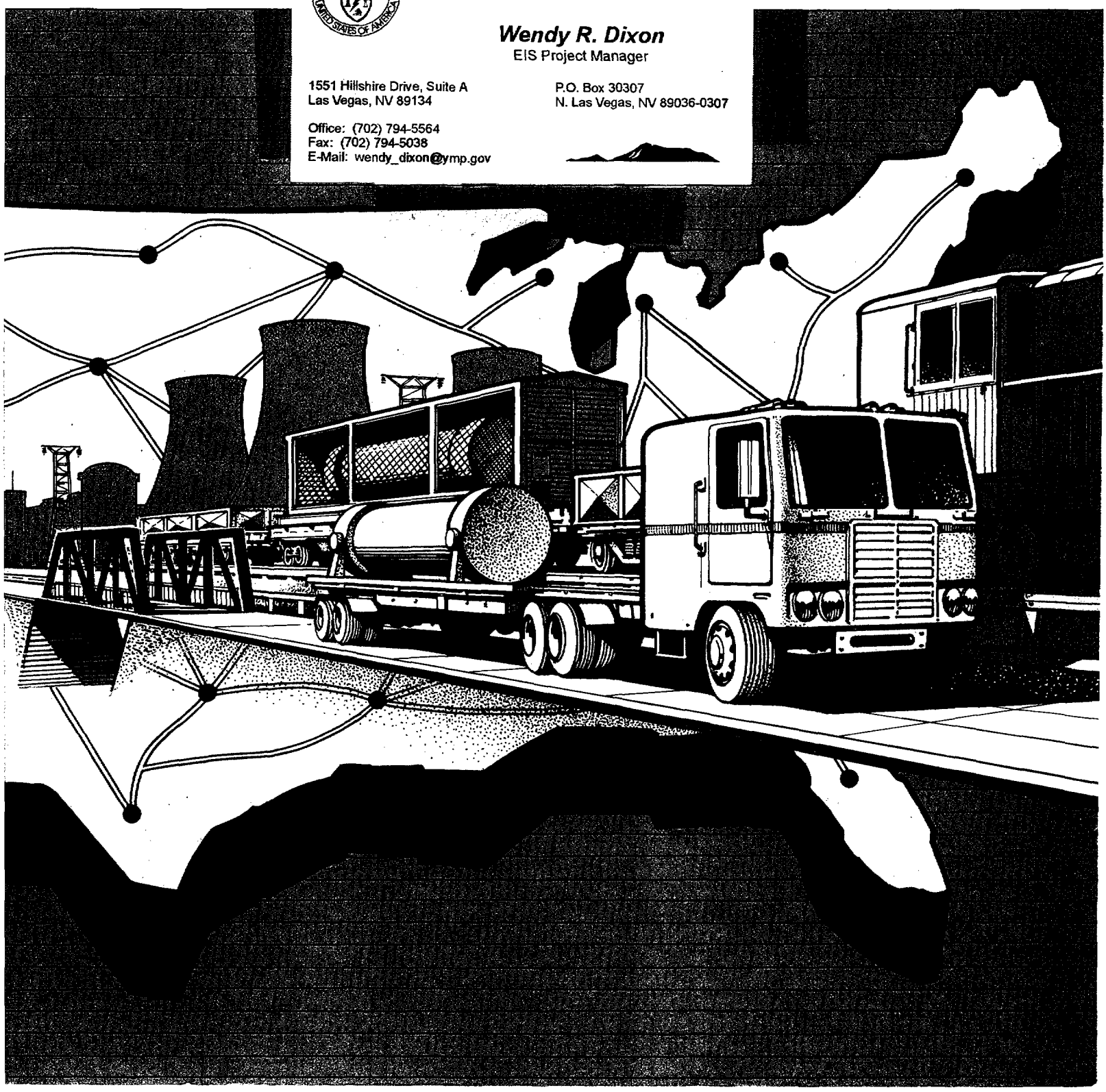

U.S. NUCLEAR
REGULATORY
COMMISSION

Transporting Spent Fuel

Protection Provided Against Severe Highway and Railroad Accidents

March 1987

Author: William R. Lahs

Division of Regulatory Applications
Office of Nuclear Regulatory Research
U.S. Nuclear Regulatory Commission
Washington, D.C. 20555

TABLE OF CONTENTS

Overview Page

Introduction 1
Accidents With No Expected Radiological Hazards *(illustration)* 2
Summary of Objective and Results 3
Background 3
How Is Safety Achieved? 4
Standards for Spent Fuel Casks 5
Accident Scenarios 6
Occurrence Rates for Truck Accident Scenarios *(illustration)* 7
Occurrence Rates for Railroad Accident Scenarios *(illustration)* 9

Cask Characteristics and Responses

Can Cask Safety Be Characterized in Real-World Accidents? 10
Representative Designs for Truck and Rail Casks *(illustration)* 10
Schematic of Spent Fuel Cask *(illustration)* 11
Cask Safety Functions and Representative Cask Design Features 11
Establishing a Scale to Measure Cask Response 13
Measure of Cask and Spent Fuel Response to: Mechanical Loads and Thermal Loads *(2 illustrations)* 14
Evaluating Cask and Spent Fuel Response to Accident Loads 15
Cask Response (Damage) Regions *(illustration)* 15
Relationships Between Cask Response and Potential Radiological Hazards 16
Typical Radioactive Material Release Pathway *(illustration)* 17
Typical Radiation Level Increase as a Result of Lead (Gamma Shield) Slumping *(illustration)* 19
Cask Damage - What Accident Conditions Are Important and How Are They Defined? 20

Potential Hazards and Risk

Fraction of Accidents Without Expected Radiological Hazards 22
Accident Scenarios Generating Mechanical Forces Incapable of Causing Functional Cask Damage *(illustration)* 23
Accident Scenarios Generating Thermal Forces Incapable of Causing Functional Cask Damage *(illustration)* 25
Potential Radiological Hazards Resulting From Functional Cask Damage 26
Fraction of Truck and Rail Accidents Involving Spent Fuel Shipments That Cause Cask Responses Within Each Response Region *(illustration)* 27
Interpretation of the Relationship Between Potential Radiological Hazards and Real-World Severe Accidents 28
Risk Estimate for Spent Fuel Shipments 28
Risk Results - Comparison With Past FES Evaluation *(illustration)* 30

INTRODUCTION

This report summarizes the results of a study conducted for the Nuclear Regulatory Commission (NRC) to determine the level of safety provided during shipments of spent fuel from U.S commercial nuclear power plants. The study focuses on the protection provided for shipments that may be involved in truck or railroad accidents.

During shipment, the cask and the form and structure of the spent fuel being shipped provide the primary physical means for containing radioactivity and for limiting radiation levels outside the cask. These functions must be maintained at acceptable levels even under the wide range of forces the cask and fuel could be subjected to during an accident.

Spent fuel shipments are regulated by both the Department of Transportation (DOT) and the NRC. The NRC evaluates and certifies the design of the shipping casks used to transport spent fuel, while DOT regulates vehicles and drivers.

Current NRC regulations require that shipping casks meet certain performance standards. The performance standards include normal operating conditions and hypothetical accident conditions a cask must be capable of withstanding without exceeding specified acceptance criteria that (1) limit releases of radioactive material and radiation levels outside the cask and (2) assure that the spent fuel will remain subcritical (that is will *not* undergo a self-sustaining nuclear reaction).

The study, conducted by Lawrence Livermore National Laboratory (LLNL),* began with an assessment of the possible mechanical and/or thermal forces generated by actual truck and railroad transportation accidents. The magnitudes of forces from actual accidents were compared with forces attributed to the "regulatory-defined" hypothetical accident conditions. The frequency of the accidents that can produce defined levels of thermal or mechanical forces was also developed. With this information, the study results show that for certain broad classes of accidents, spent fuel casks provide essentially complete protection against radiological hazards. For extremely severe accidents, those that could conceivably impose forces on the cask greater than those implied by the hypothetical accident conditions, the likelihood and magnitude of any radiological hazard were conservatively calculated. The study also contains an evaluation of the radiological risk from transportation accidents. Risk represents the summation of the products of the magnitude and likelihood of all accident outcomes. The purpose for making the risk calculations was to compare the resulting values with those previously used by NRC in judging the adequacy of its regulations.

The purpose of this summary, prepared by the NRC staff, is to present the results of the LLNL study to a broad range of readers who may possess varying degrees of knowledge on the technical subjects covered in the LLNL technical report. As a result, this summary focuses on the overall approach and major results of the study. Although this summary describes many important assumptions and insights, a complete understanding of the scope and meaning of the LLNL work would require, as a minimum, frequent reference to the main LLNL report and its supporting appendices.

For the reader interested solely in the results of the LLNL study, the figure on the next page, the foldout on page 29, and the discussion under "Summary of Objective and Results" should be consulted. Readers wishing to understand the logic of the approach and the basis for major assumptions should refer to the main body of this summary report, which presents a step-by-step explanation of the separate tasks required to meet the study's objectives.

* "Shipping Container Response to Severe Highway and Railway Accidents," NUREG/CR-4829, February 1987. This report underwent peer review by the Denver Research Institute. The LLNL report and documentation resulting from peer review are available for inspection and copying at the NRC Public Document Room, 1717 H Street, NW, Washington, D.C. Formal NRC reports are available for purchase through the Superintendent of Documents, U.S. Government Printing Office, Post Office Box 37082, Washington, D.C. 20013-7082.

OVERVIEW

Accidents With No Expected Radiological Hazards

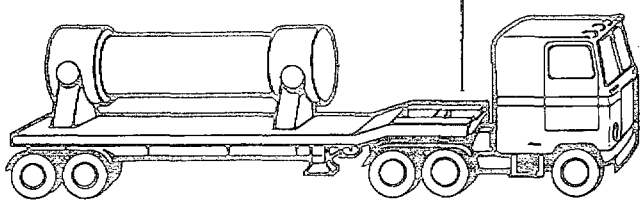

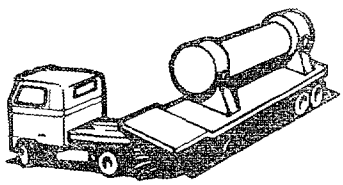

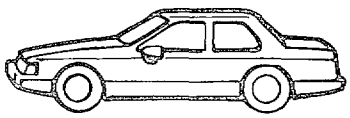

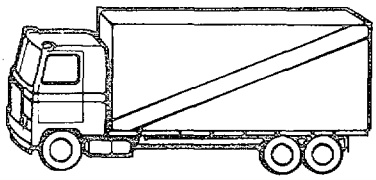

~950 of Every 1000 Accidents

- "Soft" Target Vis-a-Vis Spent Fuel Cask
- No Fire or Fire of Either Limited Extent, Temperature, or Duration

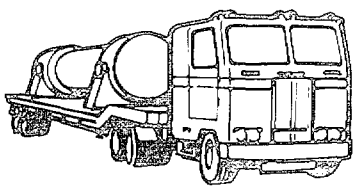

~44 of Remaining 50 Accidents

One or More of the Following Apply:

- Velocity Too Low
- Impact Angle Too Shallow
- Object Surface Too Soft
- No Fire or Fire of Either Limited Extent, Temperature, or Duration

Conclusion:

994 of Every 1000 Truck Accidents Generate Forces Incapable of Causing Cask Functional Damage.

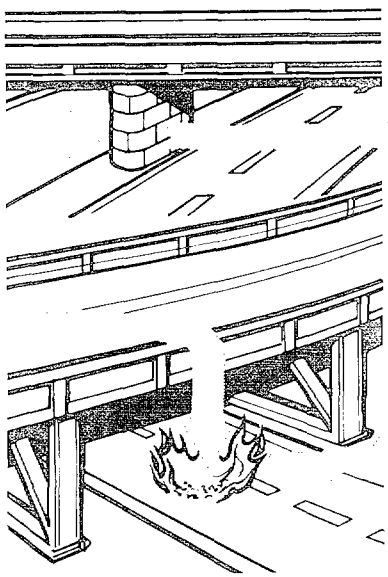

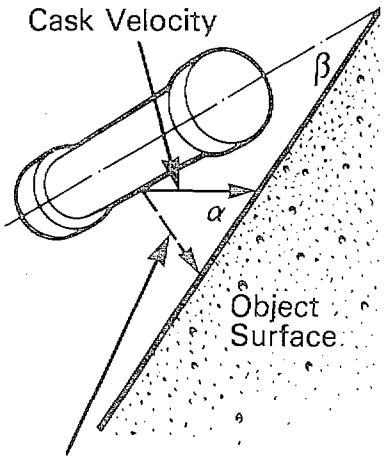

α = Impact Angle

β = Cask Orientation Angle

Summary of Objective and Results

The objective of this study was to characterize the level of safety for commercial spent nuclear fuel shipments should they become involved in severe transportation accidents. Researchers evaluated a broad spectrum of severe, historically documented, truck and rail accidents that caused death, injury, or significant property damage and assessed the minimal level of performance that should be achieved by NRC-licensed spent fuel shipping casks. The results, illustrated in the figure on the opposite page, indicate that no radiological hazard would be expected in at least 994 of every 1000 severe transportation accidents. In only about one accident every 40 million shipment miles (or once every 13 years assuming 3 million shipment miles per year) would minor functional cask damage be expected. If any radiological hazards were created, their magnitude would be expected to be less than currently-defined compliance values in existing regulation. In only about one accident every 80 million shipment miles could cask damage be significant enough to cause a radiological hazard which could equal or slightly exceed existing compliance values.

The data from documented severe accidents had to be extrapolated to characterize extremely severe accidents for which experience provided no models. This process led to the finding that in about 1 in 100,000 truck accidents and 1 in 10,000 rail accidents, extensive damage to cask and fuel could occur. In these situations, engineering judgment was used to conservatively estimate the resulting radiological hazard; however, predictions made under such unlikely accident conditions are subject to uncertainty.

In an attempt to gauge this uncertainty, the study assessed the potential for a radiological hazard in extremely severe accidents by assuming that a spent fuel shipping cask with minimally acceptable capabilities was involved in the four documented severe accidents shown on page 29. The most likely outcome in three of these four accidents would be minor or superficial damage to the cask and no radiological hazard. In the fourth, and under some circumstances in two of the three previous accidents, a radiological hazard could occur. Its magnitude would be less than or comparable to the hazard implied by compliance values in existing NRC regulations.

As a final point of reference, the risk of spent fuel shipments was evaluated and compared with previous estimates used in assessing the adequacy of existing regulations. The resulting risk level was less than one-third of past estimates.

BACKGROUND

Over the last 10 years, thousands of shipments of commercially generated spent nuclear fuel have been made throughout the United States without causing any adverse radiological consequence to members of the public. In the near future, the number of these shipments is expected to increase. More than 40,000 spent fuel assemblies have been used at nuclear power plants in the United States and are currently being stored in underwater "fuel pools" at these sites. Under the terms of the Nuclear Waste Policy Act (NWPA) of 1982, these spent fuel assemblies will be placed in a Federal Repository for permanent storage beginning in 1998. Shipments from reactor sites to the Repository for ultimate disposition will require increased rail and road movement of spent fuel.

In part, because of the projected increase in the number of spent fuel shipments, the U.S. Nuclear Regulatory Commission (NRC) decided to reassess the level of safety provided by casks designed to existing regulations.

In large measure, the safety associated with spent fuel shipments, especially in the event of a transportation accident, is provided by the casks that contain the spent fuel during shipment. These casks must meet performance requirements specified in the *Code of Federal Regulations* (10 CFR 71) and their design must be certified by the U.S. Nuclear Regulatory Commission.

OVERVIEW

Other elements of safety are provided by the Department of Transportation's operating requirements for vehicles and drivers. These operating requirements are defined under Title 49 of the *Code of Federal Regulations*.

What Is Spent Nuclear Fuel?

Spent nuclear fuel refers to uranium-bearing fuel elements that have been used at commercial nuclear power reactors. This spent (used) fuel contains radioactive material resulting from the fission process that takes place within the reactor. The radioactive material is formed within ceramic fuel pellets about the diameter of an aspirin tablet but twice as thick. These pellets are contained in 15-foot-long sealed metal tubes or rods—a few hundred per rod. From about 50 to 400 of these rods are grouped in a square array to form a spent fuel assembly.

When spent fuel is removed from the reactor, the self-sustaining fission process has stopped; however, spent fuel assemblies still generate significant amounts of radiation and heat. This heat and radiation are caused by the "radioactive decay" of the products of the fission process. The actual material emitting the radiation is, for the most part, still contained within the ceramic fuel pellet. Some material, however, mainly in gaseous or volatile form, can leave the pellet. This material is normally contained within the metal fuel rods that surround the pellets.

The heat and radioactivity in spent fuel necessitates that any shipment be made in containers or casks that provide the necessary degree of public protection. In practice, this means a cask must shield and contain the radioactivity and dissipate the generated heat.

How Is Safety Achieved?

Safety in the shipment of spent nuclear fuel is achieved by a combination of factors including the physical properties of the spent fuel itself, the ruggedness of the container or cask containing the fuel, and the operating procedures and controls applicable to both the cask and the vehicle transporting the cask. If a transportation accident should occur, safety is primarily assured by the integrity of the spent fuel shipping cask. The design of all casks used to ship commercially generated fuel in the United States must meet performance-oriented requirements specified in Federal and international regulations. The performance requirements include the definition of a series of "hypothetical accident conditions," described on the opposite page. All licensed casks must be capable of withstanding the mechanical and thermal loadings imposed by these conditions and still meet specified acceptance criteria.

These acceptance criteria include: (1) stringent limits on both the maximum allowable release of radioactive material and the radiation levels outside of a cask and (2) requirements regarding cask configurations which assure that subcriticality of the spent fuel is maintained.

In practice, NRC verifies conformance with these acceptance criteria by analyses demonstrating that essentially no permanent deformations or excessive temperatures occur within a cask's containment shell following the sequentially applied loadings imposed by hypothetical accident conditions. Demonstrations that casks can withstand these conditions, coupled with information about cask designs and construction materials, suggests that casks should be capable of withstanding far greater mechanical and thermal loadings during an accident than those caused by hypothetical accident conditions without causing any significant radiological hazard. The LLNL quantifies this capability through two supporting analytical assessments. The first identifies actual documented accidents in which mechanical and thermal loads would be less than those implied by the hypothetical accident conditions. The second identifies accidents (and their likelihood of occurrence) in which loads could exceed those specified in the regulations and evaluates the capability of a cask to continue to function safely under such conditions.

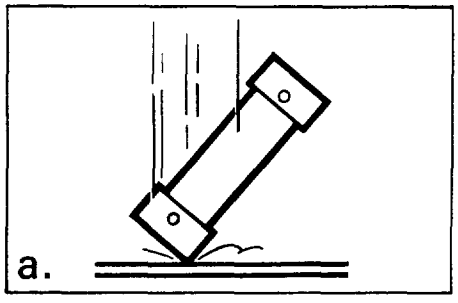

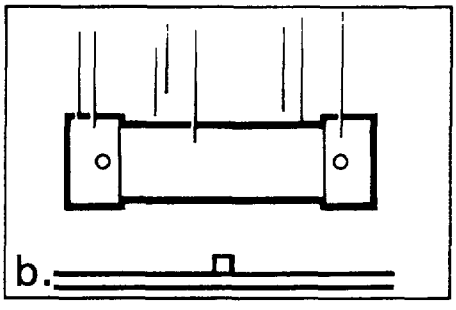

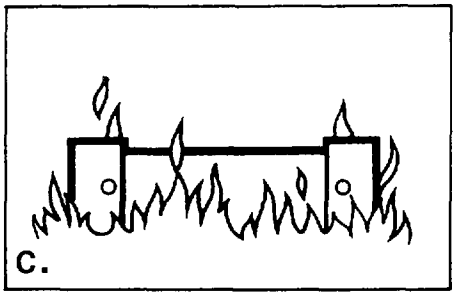

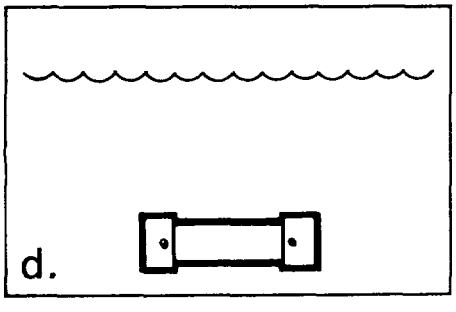

Standards for Spent Fuel Casks

For certification by the NRC, a cask must be shown by test or analysis to withstand a series of accident conditions. These conditions have been internationally accepted as simulating damage to spent fuel casks that could occur in most severe credible accidents. The impact, fire, and water-immersion tests are considered in sequence to determine their cumulative effects on one package. A separate cask is subjected to a deep water-immersion test. The details of the tests are as follows:

Impact

Free Drop (a) — The cask drops 30 feet onto a flat, horizontal, unyielding surface so that it strikes at its weakest point.

Puncture (b) — The cask drops 40 inches onto a 6-inch-diameter steel bar at least 8 inches long; the bar strikes the cask at its most vulnerable spot.

Fire (c)

After the impact tests, the cask is totally engulfed in a 1475°F thermal environment for 30 minutes.

Water Immersion (d)

The cask is completely submerged under at least 3 feet of water for 8 hours. A separate cask is completely immersed under 50 feet of water for 8 hours.

Insights on the Safety Provided by Typical Spent Fuel Shipping Casks

Over the last decade, considerable experimental and analytical evidence has been gathered to provide insights into the safety provided by spent fuel shipping casks. The most dramatic evidence has involved full-scale crash tests carried out both in this country and in Great Britain. Trucks and rail cars carrying casks have been run head-on into massive concrete barriers at speeds from 60 to over 80 mph. Casks have also been struck by locomotives travelling at 100 mph and have been immersed in fires in which temperatures have been deliberately kept high. In all tests, the resulting cask damage ranged from superficial to very minor. These results certainly attest to the overall ruggedness of the casks tested and the general integrity of their design. From an analytical standpoint, the most notable effort to provide insights into the safety of spent fuel shipments involved the preparation of a generic environmental statement on the shipment of all radioactive materials, including spent fuel.* This study included an evaluation of the risks from transportation accidents involving shipments of radioactive material. Risk is a measure that multiplies all potential radiological hazards by

* "Transportation of Radioactive Material By Air and Other Modes," NUREG-0170, December 1977.

OVERVIEW

their individual likelihood of occurrence and sums the results. The risk associated with all radioactive material shipments was so small that the Nuclear Regulatory Commission judged that its regulations regarding the packaging of these materials were adequate and not in need of immediate change. The Commission did call for continuing efforts to further understand the hazards and risks posed by the transportation of radioactive material. The LLNL study is one result of that effort.

Accident Scenarios

Spent fuel shipments could be subjected to a variety of transportation accident situations or scenarios. Identifying these potential scenarios began with the historical data from typical truck accidents that involved deaths and injuries or those that exceeded certain levels of property damage. Data from minor accidents (e.g., fender benders) were excluded.

Highway

Most of the information on the likelihood of single and multi-vehicle accidents in the figure on the opposite page is based on historical data. The solid lines show accident scenarios derived from the historical data whereas the dashed extrapolations consider the potential effects of cask impacts with a variety of hard objects or surfaces. Impacts with these types of objects or surfaces have the greatest potential for causing damage. The extrapolation was made by merging documented accident data with statistical data representing highway terrain and adjacent structures. This data was obtained from recorded information and by surveying hundreds of miles of typical interstate highway to determine how frequently surfaces and objects such as large bridge columns or hard rock surfaces occur. Most spent fuel shipments will be made over such interstates.

TRUCK ACCIDENT SPEEDS

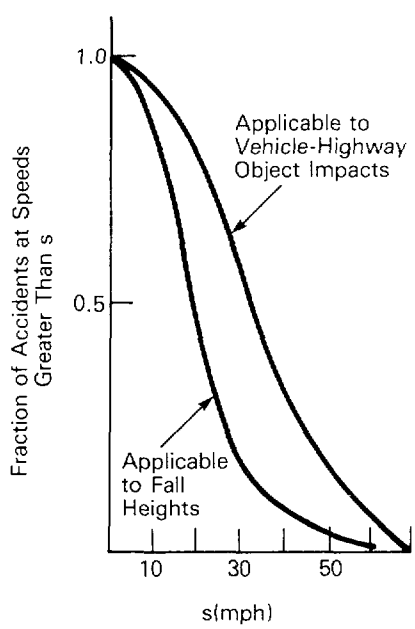

The historical data also provided the basis for developing speed distributions typical of the accidents (see the figure on this page).

The speed distributions were based on (1) estimated vehicle speeds at time of impact; (2) speeds attained in falls (where fall heights were calculated from a survey of bridge heights along interstate highways); or (3) combinations of these speeds. For the truck-train scenario, the train speed distribution reflects the historical data applicable to grade-crossing accidents.

Historical data on accident-related fires was limited to statements of whether or not a fire occurred. Information on the duration and temperatures of fires, and of their location with respect to a vehicle's cargo was extremely sparse. As a result, the environments typical of accident-related fires had to be assessed through an engineering model. This model is discussed in the following section on railroad accident scenarios.

Occurrence Rates for Truck Accident Scenarios

† Rounded values

* Accident sequences subsequently shown to have the most likely possibility of causing cask damage

■■ Developed extensions of historical *scenario data*

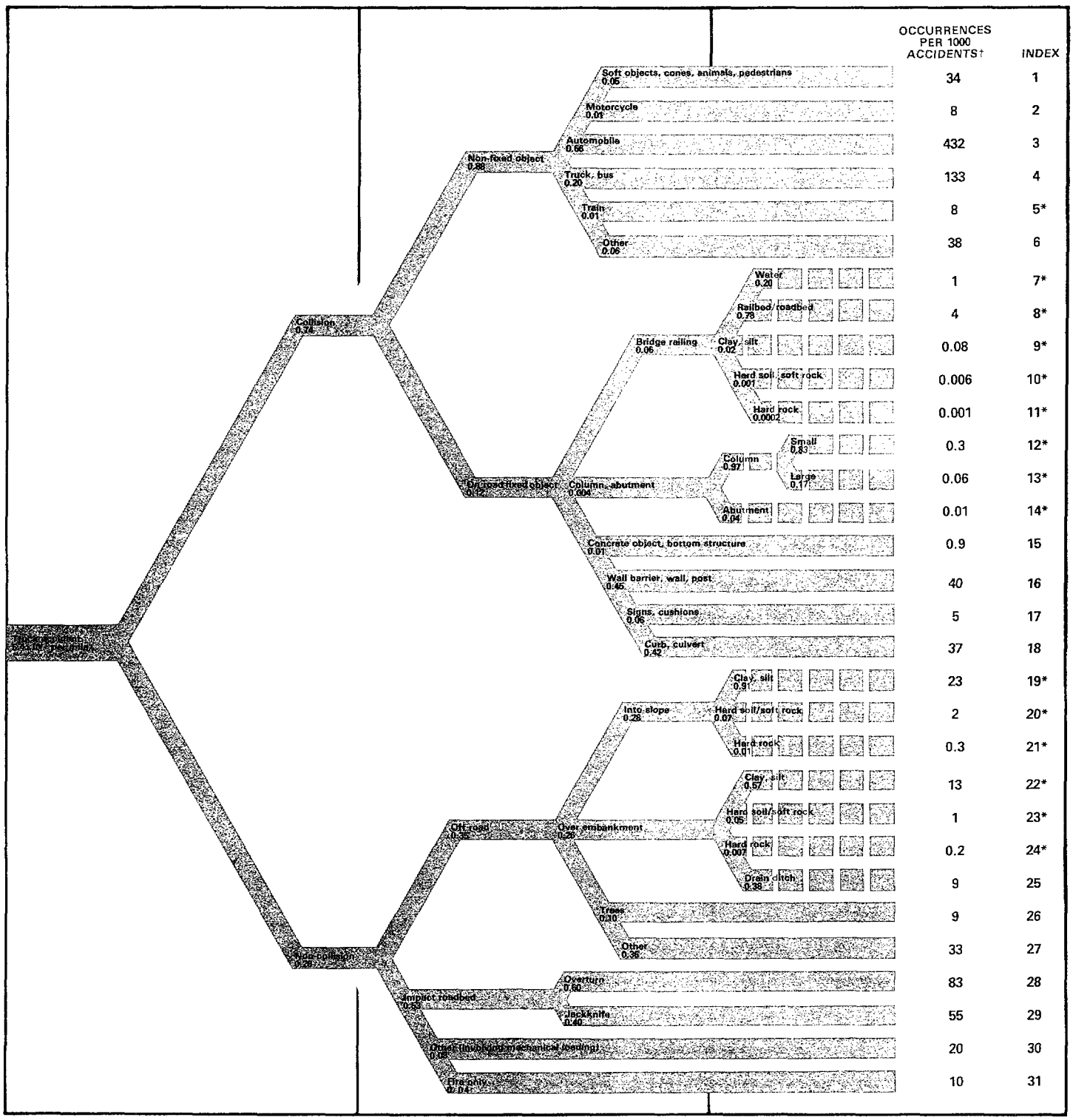

OVERVIEW

Railroad

Railroad accident scenarios were also based on documented rail accidents involving deaths, injuries, or property damage exceeding small thresholds. This historical data provided the bases for the likelihood of accident scenarios shown in the figure on the opposite page. The dashed lines indicate accident scenarios derived mainly from route survey information. They were developed to more accurately determine the types of accidents with the potential to cause functional damage to the cask.

The available historical fire-accident data, pertinent to both rail and truck accidents, could not be used to determine potential thermal loadings on casks. Therefore, an existing computer code, previously developed to characterize transportation accident fires, was used to estimate the likelihood of fire temperatures and durations. The code evaluated data on accident type, cause of fire, availability of combustibles, fire-fighting efforts, and combustible burning rates to predict the likelihood that fire temperatures and durations would reach specific values. The top graph on this page shows this evaluation for railroad collision and derailment accidents. The bottom graph gives the results of the evaluation applicable to temperatures for both truck and rail accidents.

These results, which included several conservative assumptions, were used to represent transportation accident fires. For example, for railroad accidents involving collisions, about 10% of all fires were estimated to last longer than 2 hours. Temperatures in over half of such accidents were estimated to exceed 1800°F.

FIRE DURATIONS AND TEMPERATURES

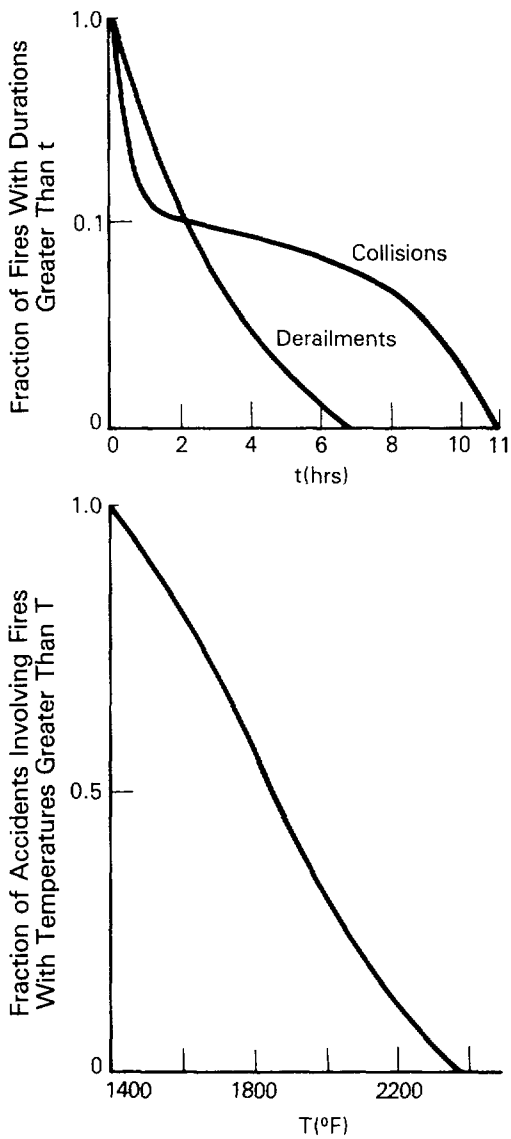

Occurrence Rates for Railroad Accident Scenarios

† Rounded values

* Accident sequences subsequently shown to have the most likely possibility of causing cask damage

■■ Developed extensions of historical scenario data

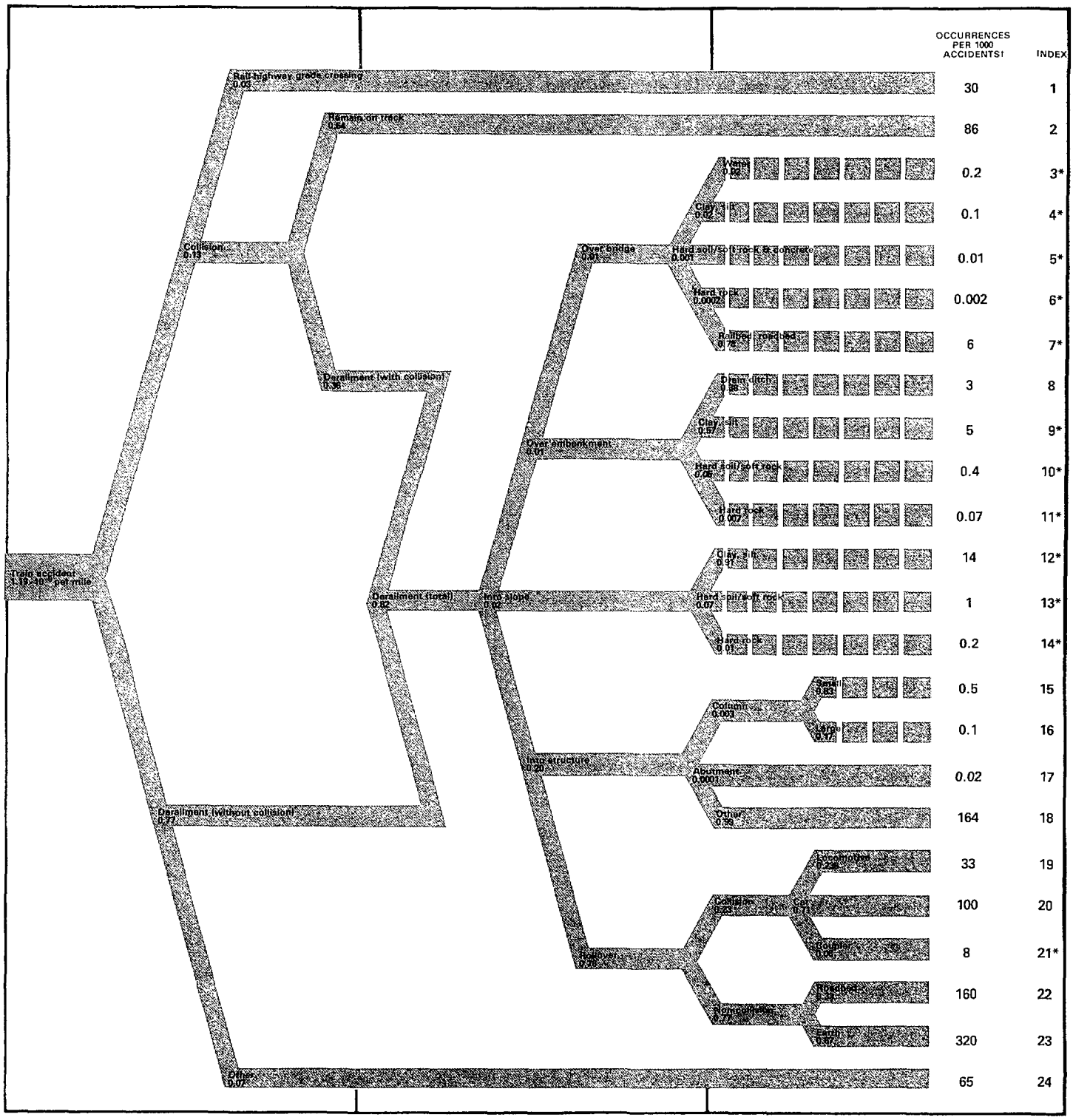

CASK CHARACTERISTICS AND RESPONSES

Can Cask Safety Be Characterized in Real-World Accidents?

This question was critical to the credibility of the LLNL study. The answer was "Yes." An approach to the problem could be followed to allow fair characterization of the minimal level of safety that would be meaningful to an assessment of the adequacy of existing regulatory requirements. The first step taken in this approach was to define two representative cask designs—one for truck shipments and one for rail shipments. In both cases, the casks were designed to just meet "regulatory" acceptance criteria following an accident with mechanical, thermal, and water-immersion accident conditions depicted on page 5. The cask designs included only those features absolutely necessary to determine a cask's ability to achieve its primary safety functions. (These safety functions and the cask features that achieve these functions are discussed briefly on pages 11 through 13.)

Representative Designs for Truck and Rail Casks

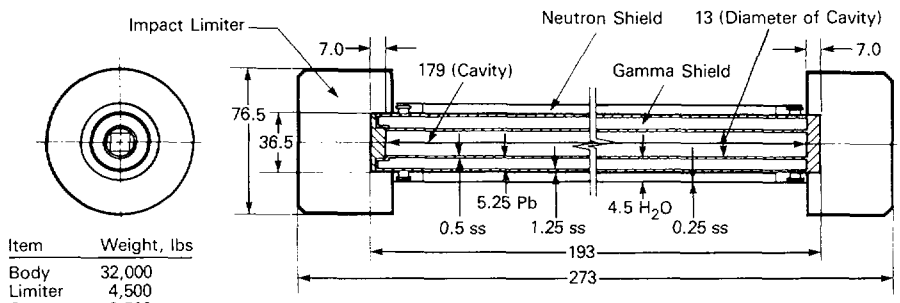

Item	Weight, lbs
Body	32,000
Limiter	4,500
Contents	2,500
	39,000

TRUCK CASK

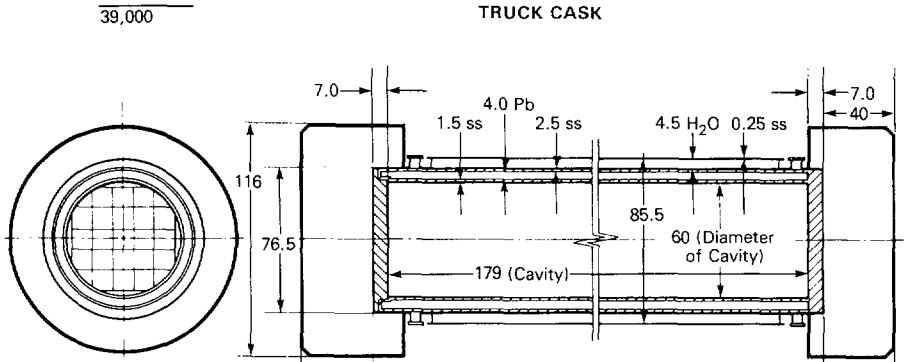

Item	Weight, lbs
Body	122,500
Limiter	22,500
Contents	52,500
	197,000

RAIL CASK

All Dimensions in Inches

ss = Stainless Steel
Pb = Lead
H_2O = Water

Note:
The representative truck and rail casks consist of stainless steel cylindrical shells that enclose a ring of lead shielding material. A water jacket surrounds this cylindrical structure. At each end of the cask, an "impact limiter" is provided to protect the cask against impact forces.

CASK CHARACTERISTICS AND RESPONSES

Once these representative cask designs were defined, they were subjected to the most damaging accident scenarios identified on pages 6 through 9 to determine their structural response. By measuring structural response, researchers estimated their potential for a radiological hazard. If the potential existed, the magnitude of the radiological hazard was conservatively evaluated. Through this process, that fraction of severe rail and truck accidents capable of causing a specified radiological hazard was estimated. The radiological hazard was then compared with compliance criteria in existing NRC regulations.

As an additional point of reference, the radiological risk of shipping commercial spent fuel was compared to documented estimates used by the NRC in making its past judgment on the adequacy of existing regulations (see insert on page 5).

Cask Safety Functions and Representative Cask Design Features

The primary cask safety functions include: (1) containment of radioactive material, (2) shielding against the radiation emanating from the spent fuel, and (3) assurance that subcriticality of the fuel is maintained.

Containment is achieved by retaining the radioactive material within a closed vessel. Typically, containment is provided by the integrity of the spent fuel cladding and by the cylindrical steel containment vessel or inner cask shell (see figure below). The vessel is provided with a bolted-end closure to permit loading and unloading. The closure contains a seal between the cask cavity and the environment that prevents leakage. Piping penetrations, which terminate in protected enclosures, are also provided for operational purposes. The required containment safety function is achieved by these features. Furthermore, the successful functioning of these features is promoted by (1) an externally located, energy-absorbing structure designed to protect the cask against impacts, and (2) the integration of the containment features into an overall cask design that maximizes protection provided against outside forces. In defining a representative cask, the complexities associated with various designs for containment closures, penetrations, and seals were not modeled. The failure of these features was assumed if the containment or inner shell was calculated to incur any significant permanent structural damage.

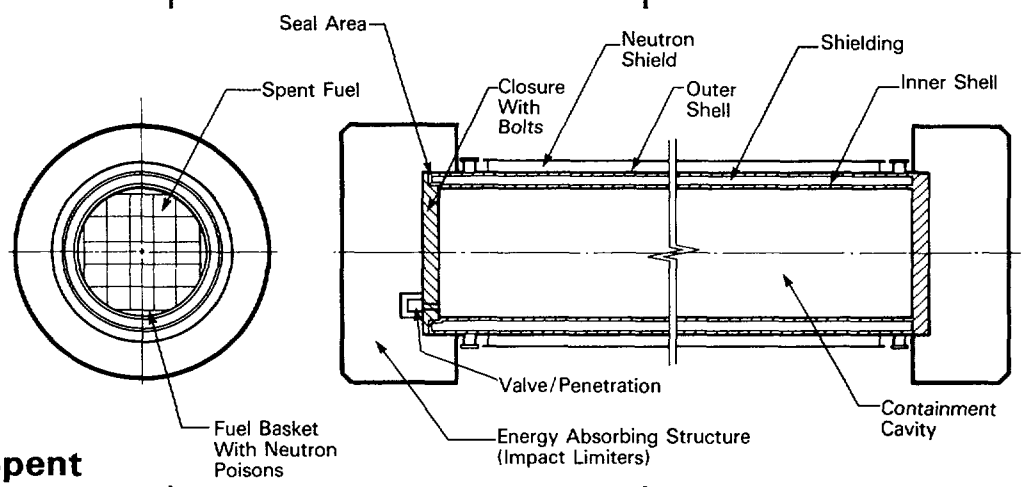

Schematic of Spent Fuel Cask

CASK CHARACTERISTICS AND RESPONSES

Shielding is provided against **gamma** and **neutron** radiation. Protection against gamma radiation which is very penetrating is most important and is achieved through use of heavy materials such as lead, uranium, or steel that reduce the radiation level. This material surrounds the containment vessel as seen in the schematic on page 11. Protection against neutron radiation is often provided by water, which typically fills a jacket surrounding the main cask body. Loss of the neutron shield normally results in a small increase in external radiation levels, but to a value that is within regulatory limits for transportation accidents. Failure of the neutron shield was assumed to occur for all accidents considered in this study. As a result, only the lead gamma shield was modeled in some detail in the representative cask designs.

Subcriticality is assured by either limiting the amount of spent fuel being shipped or by maintaining control of the spent fuel configuration during shipment and including "neutron poisons" in cask structural materials. The "poisons" are typically included in the solid structure or "basket" holding the fuel assemblies and absorb emitted neutrons, thereby making a "chain reaction" impossible and thus assuring subcriticality. Before the fuel basket can incur any significant damage, the total cask structure, including the containment

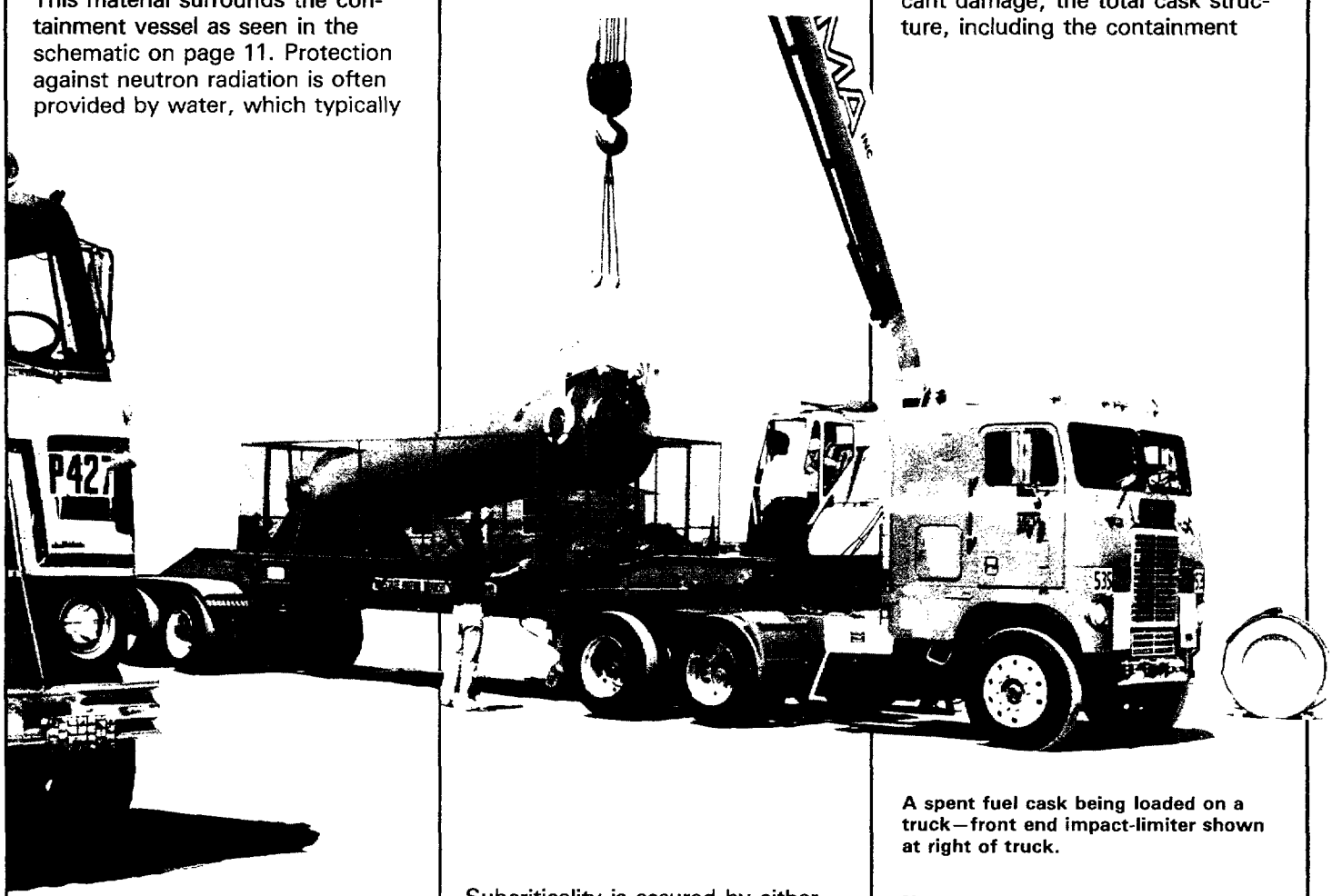

A spent fuel cask being loaded on a truck—front end impact-limiter shown at right of truck.

Note:
Actual spent fuel casks like the one shown in this figure are expected to perform their intended safety functions during an accident better than the representative cask designs assessed in this study.

shell, would have to be severely damaged. However, physical damage alone does not affect a cask's ability to maintain subcritical conditions. A material like water must surround the cask and fill the area between individual fuel rods and fuel assemblies before criticality would be possible. For these reasons, the features to assure subcriticality are not specifically modeled in the representative cask designs. Instead, an upper-bound estimate of the likelihood of criticality is provided in the LLNL report. The estimate is based on the type of accident that could substantially deform a cask in the presence of a material, like water, that would promote criticality. A brief discussion of this estimate is presented in the section on potential hazards and risks on page 26.

What Constitutes a Severe Transportation Accident?

In this study, a severe accident is one that could compromise one of three basic cask safety functions: (1) any loss of containment of spent fuel material, (2) a degradation or reduction in cask shielding capability, or (3) a loss of subcriticality control. Any of these occurrences could potentially create a radiological hazard.

Severe accidents typically involve impacts with massive and hard objects or surfaces or exposure to high-temperature fires of long duration. The scenarios shown on pages 7 and 9 are those that could compromise a cask's safety functions and potentially cause a radiological hazard.

Given the ruggedness and massiveness of spent fuel casks, a severe accident in this study would *not* include tragedies involving collisions between the vehicle transporting the cask and an automobile or bus in which several people might be killed or injured. Although potentially serious to the occupants of such vehicles, collisions with automobiles and buses at any speed involve forces that would **not** seriously compromise cask safety functions. Any deaths or injuries from such accidents would not be caused by the radioactivity of the spent fuel cargo.

Establishing a Scale to Measure Cask Response

Mechanical Loads—Measure of Cask Response

A cask and the nuclear fuel it contains can undergo various types of damage when subjected to mechanical loads. The most significant damage would include material yielding, dimensional changes, and rupture of the cask. The most common engineering guidelines used to characterize structural damage are stress, strain and displacement. Strain, particularly on the inner "containment" shell of the cask, was selected as the best single indicator to characterize cask damage following a transportation accident. Sensitivity studies established a relationship between the strains at different cask locations and the maximum strains experienced in the cask containment shell. As a result, it was possible to use a specific strain in the cask shell to estimate damage to cask components such as seals, closures, and penetrations.

Three discrete levels of strain were defined to encompass four broad ranges of cask and fuel damage, as shown in the figure on the following page. The significance of the 0.2-, 2-, and 30-percent strain values, in terms generally indicative of cask and fuel damage, is also illustrated on page 14.

CASK CHARACTERISTICS AND RESPONSES

Thermal Loads—Measure of Cask Response

Heat from a fire can conceivably damage cask components, the cask structure itself, or the spent fuel. The more important types of damage can involve degradation of cask seals, melting of the lead gamma shield, or structural failures. The significance of high temperatures on spent fuel is that it can eventually cause the fuel rods to rupture and release radioactive material into the cask.

The temperature at the centerline of the cask's gamma radiation shield is the indicator most likely to reveal the extent of cask damage from fires associated with transportation accidents. Four temperature levels are defined to categorize five ranges of cask and fuel damage. These response ranges are indicated in the next column at the bottom of the page.

What Does Strain Measure?

When subjected to a force, the steel used in the cask containment shell can change dimension. The change in dimension of any segment of the steel shell along a given direction, when divided by the original length of the segment in that direction, is termed "strain." Strains experienced by materials under design loads are typically small, except for a few

Measures of Cask and Spent Fuel Response to Mechanical Loads

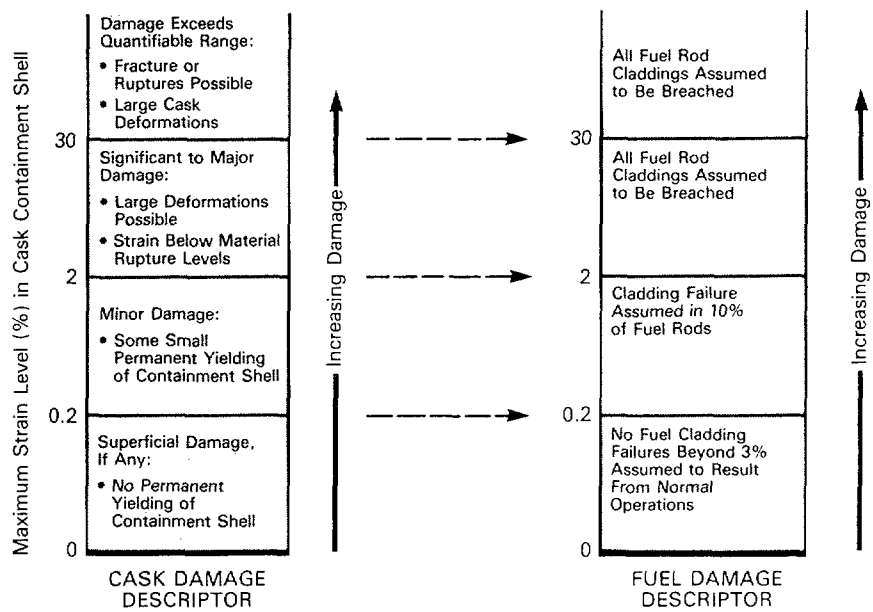

Measures of Cask and Spent Fuel Response to Thermal Loads

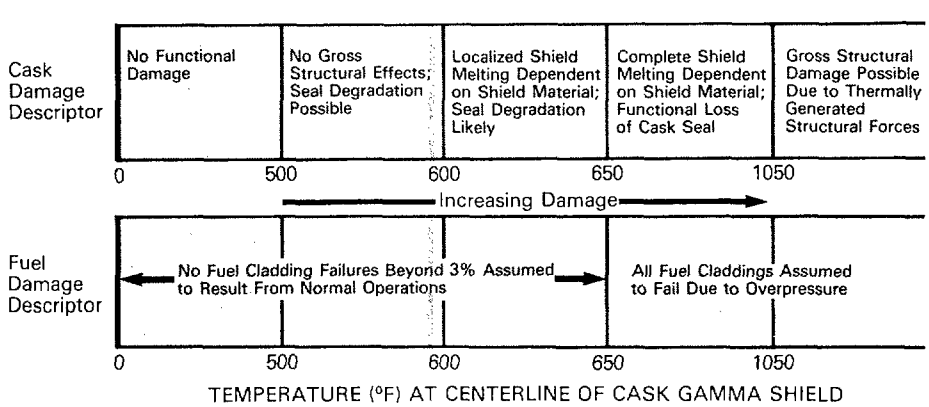

materials such as rubber. For a given material, the measure of strain can indicate whether a material will remain elastic and not deform or permanently yield or fracture and result in a rupture.

What Does Temperature Measure?

The temperature at points within a massive spent fuel cask can indicate the amount of heat absorbed from external sources such as fires and can also indicate potential cask or fuel damage. The cask can be damaged by the degradation of seals or the melting of the gamma radiation shield. For the spent fuel, the pressure of gases within the fuel rods, and the strength of the fuel cladding is strongly influenced by temperature. If temperatures become high enough, fuel rods could rupture and release radioactive material inside the cask.

Evaluating Cask and Spent Fuel Response to Accident Loads

On the previous two pages, cask containment strains and centerline shield temperatures were defined separately to characterize broad categories of cask and fuel damage. In real transportation accidents, however, a cask could undergo a combination of mechanical and thermal loads. The "cask response matrix" shown on this page therefore combines the

Cask Response (Damage) Regions

Note:
The size of each region or group of regions has no relationship to the likelihood of accidents causing the described damage level.

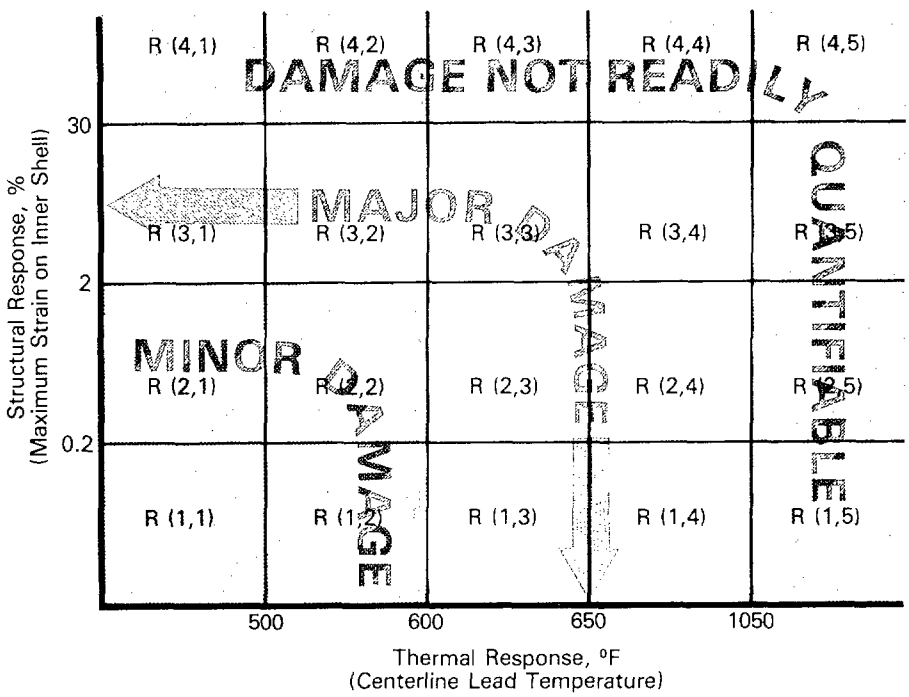

SUPERFICIAL DAMAGE—No permanent deformation to containment vessel. Temperatures too low to degrade material. Strains and temperatures less than or equal to values considered acceptable following imposition of "regulation-defined" hypothetical accident conditions.

MAJOR DAMAGE—Large containment vessel deformations without gross fractures or ruptures. Temperatures high enough to melt lead shielding.

MINOR DAMAGE—Limited permanent containment vessel deformations. Temperatures approaching the range where the lead shield could melt and the seals could degrade.

DAMAGE EXCEEDING DEFINABLE RANGES—Fractures or ruptures possible. Temperatures sufficiently high to affect cask and spent fuel integrity.

CASK CHARACTERISTICS AND RESPONSES

structural and thermal responses to categorize cask damage from all possible combinations of mechanical and thermal loads.

The process of categorizing cask response for a specific accident scenario is best described by an example. From the figure on page 7, scenario 20 indicates that about 2 of every 1000 truck accidents are expected to result in an impact into a slope consisting of hard soil or soft rock. Cask damage from this type of accident can be estimated (in terms of maximum containment vessel strain) if truck velocity, angle of impact, and cask orientation at impact are specified. Similarly, if a fire occurs during this accident (an event expected in about 1 of every 100 slope-impact accidents), damage to the cask can be estimated in terms of temperature at the centerline of the lead shield if the fire temperature, duration, and cask location relative to the fire are specified. The overall cask damage for the entire spectrum of transportation accidents characterized by cask impact with a soft rock slope can be calculated and placed into one of the response regions shown on page 15.

Two further steps are then required to complete the evaluation of the level of safety provided for spent fuel shipments. First, each response region must be considered in terms of the radiological hazard that could result from the specified level of cask damage. This relationship is described on pages 16 through 19. Second, the likelihood that the specific accident scenario (for example, impact into soft rock slope) can lead to a cask response within a particular region must be evaulated. This part of the evaluative process is further described on pages 20 through 27.

Relationship Between Cask Response and Potential Radiological Hazards

For most cask responses to transportation accident loads, any resulting radiological hazards can be conservatively estimated with a high degree of confidence.

Relationships of Mechanical Loads, Cask Response, and Radiological Hazards

For accidents causing small structural strains in the cask containment shell, no radiological hazards would be expected since, for less than 0.2 percent strain, no significant permanent deformation would occur in the containment shell.

Strains in the 0.2- to 2-percent or the 2- to 30-percent ranges were presumed to cause containment functional failure, but without gross rupture of the containment (see figure on opposite page). The lack of any gross rupture is a reasonable expectation based on the known ductility (that is, the ability to stretch without fracturing) of the stainless steel material typically used in cask containment shells. At these strain levels, however, the impact loads could cause the lead gamma shield material to "slump." Where voids or gaps in the shield occur, radioactivity inside the cask could increase radiation levels outside the cask (see figure on page 19).

The major difference between accidents causing 0.2- to 2-percent strain as opposed to 2- to 30-percent strain involves the behavior of the fuel rod cladding that contains the spent fuel within the cask. The lower range was assumed to cause failure of up to 10 percent of the fuel rod cladding, whereas at the higher range, all rod claddings are assumed to fail. In either case, experimental information on radioactive releases from failed fuel rods is used to establish the fraction of gaseous, volatile, and solid radioactive material that could escape from each fuel rod. For the purpose of this study, all of this material was assumed to be released from the cask, although in reality, a large but undefinable fraction would "plate out" or adhere to surfaces within the cask.

What Types of Radiological Hazards Could Be Possible in Transportation Accidents?

The fuel assemblies used in commercial power reactors contain solid ceramic uranium oxide (UO_2) fuel pellets. During reactor operation, the uranium fuel fissions creating radioactive fission and activation products. Physically, most of the radioactive material remains in solid form within the pellets, although the pellets may exhibit some degree of fracturing. However, a small fraction of the fission products are gases or are in volatile form (the amount of volatiles being dependent on temperature). The radiological hazards that could conceivably be created by this material can occur through two distinct cask-damage mechanisms: (1) a release of material from a damaged cask or (2) an increase in the external radiation level emanating from material within the cask.

Material releases can occur in gaseous, volatile, or in solid form. The solids can be small airborne particles or larger pieces. Solid particles that could be inhaled can pose a significant hazard to people.

Increased radiation levels from material still within the cask could occur as the result of voids in the cask shielding due to mechanical forces or temperatures high enough to cause shield materials to melt.

Typical Radioactive Material Release Pathway

Presumed if either:

(1) Cask containment vessel strain between 0.2 and 30 percent, or

(2) Centerline gamma shield temperature between 500°F and 1050°F

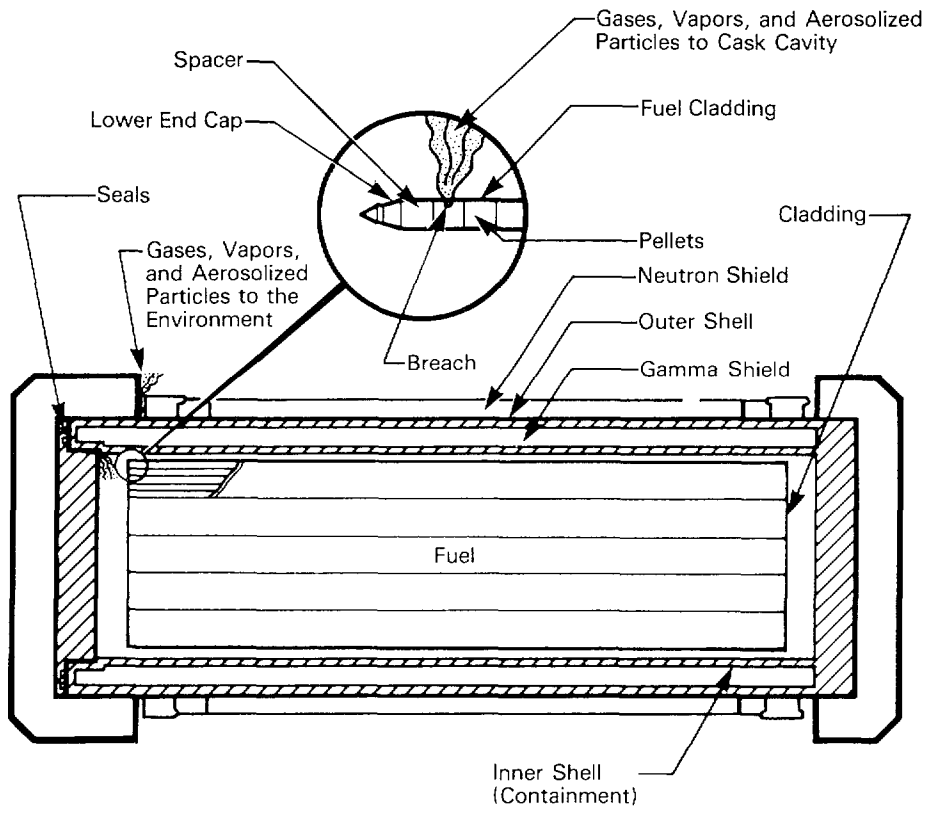

CASK CHARACTERISTICS AND RESPONSES

The radiological hazards from accidents causing cask strains greater than 30 percent could not be precisely predicted because of the extensive and potentially varied nature of cask and spent fuel damage. In these situations, all gaseous material was presumed to be released while radioactive material in volatile and solid form was arbitrarily assumed to increase by a factor of 10 over the values predicted for accidents causing strain in the range of 2 to 30 percent. Only a very small fraction of truck or rail accidents, beyond any known accidents, could be severe enough to cause strains greater than 30 percent in the cask containment shell.

Relationships of Thermal Loads, Cask Response, and Radiological Hazards

Fires resulting from transportation accidents can affect a spent fuel cask and its contents. If the fire does not cause 500°F temperatures at the cask shield centerline, no radiological hazard would be expected since cask structural components are not susceptible to thermal deterioration or damage at temperatures below this level.

If temperatures at the shield centerline should reach between 500°F and 600°F, certain cask seal materials could degrade and lose their capacity to function. The spent fuel within the cask, however, would not reach temperatures high enough to fail the fuel rod cladding material. As a result, any potential radiological hazard created by a release of radioactive material from a cask would be limited to gaseous and volatile materials that have escaped from fuel rods whose cladding has failed during or before the accident for reasons other than the fire. Based on past experience, 3 percent of the fuel rods in a shipment were assumed to have cracks or breaks as a result of their use in the reactor, handling and storage before shipment, or vibrational loads during normal shipment.

At centerline shield temperatures between 600°F and 650°F, two types of radiological hazard could be created if lead is used as the gamma shield material (as is the case for the representative cask designs). Lead melts at 621°F and expands in volume during the melting process. This expansion can cause structural stresses that can result in loss of the cask's containment function. When the lead cools and resolidifies, its contraction can cause voids or gaps to form in the gamma shield. These gaps degrade cask shielding capabilities and so increase radiation levels outside the cask, as shown in the figure on the opposite page. In this study, a cask's loss of shielding capability was calculated as a function of temperature. A cask configuration that maximizes lead slump and subsequent voids, thereby maximizing radiation levels outside the casks, was also assumed.

Between 650°F and 1050°F, release of radioactive material from the cask or increased radiation levels outside the cask from contained material are more likely to occur and the magnitude of the resulting hazard could become larger. The major factor affecting the potential radiological hazard is the fraction of fuel rods experiencing cladding failures. For shield temperatures in this range, fuel rod temperatures can cause cladding failures; therefore, any radioactive material in mobile form could be released from the fuel to the cask. If cask containment is compromised, this material could reach the environment. Experimental information on the release of radioactivity from spent fuel has been used to estimate the magnitude of the potential radiological hazard. The conservative assumption was made that any material released inside the cask would escape from the cask to the environment.

If centerline shield temperatures exceed 1050°F, a cask's functional capabilities could be affected by several complex chemical, thermal, and structural processes that cannot be precisely predicted. In these situations, all gaseous radioactive material was presumed released to the environment whereas the release of radioactive material in volatile or solid form was arbitrarily assumed to increase by a factor of 10 over values

Typical Radiation Level Increase as a Result of Lead (Gamma Shield) Slumping

Presumed if either:

(1) Cask containment vessel strain exceeds 0.2 percent, or

(2) Centerline gamma shield (lead) temperature exceeds 600°F

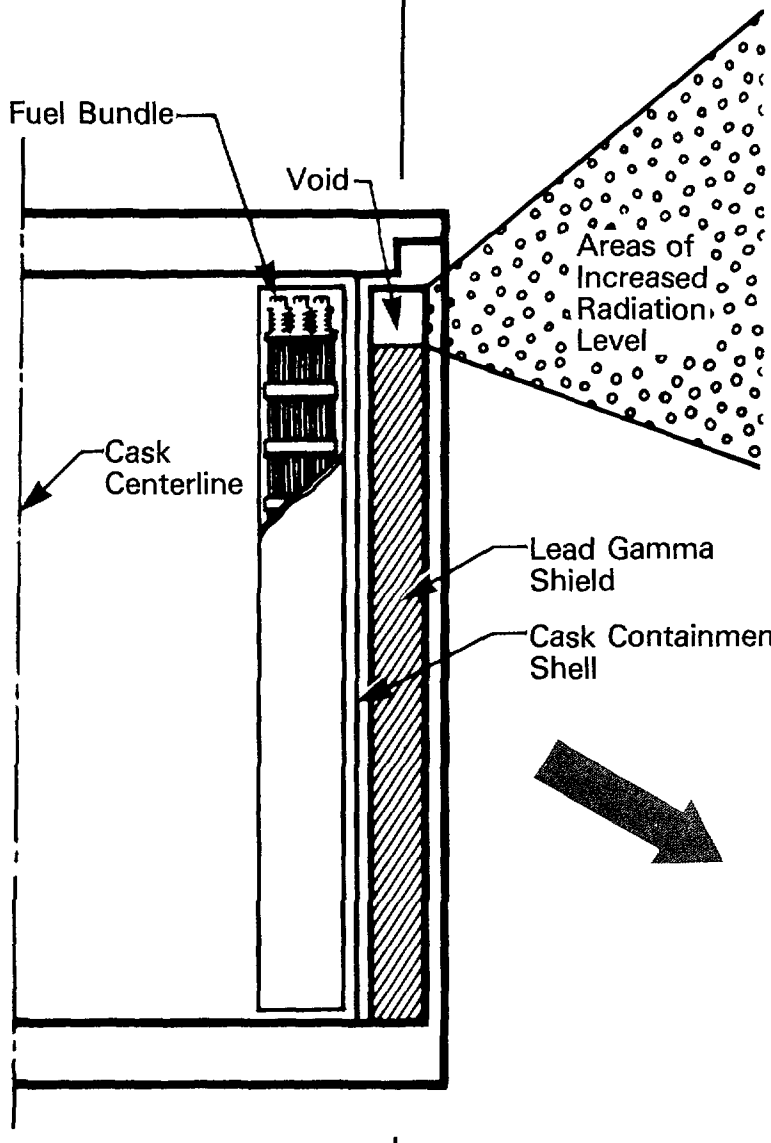

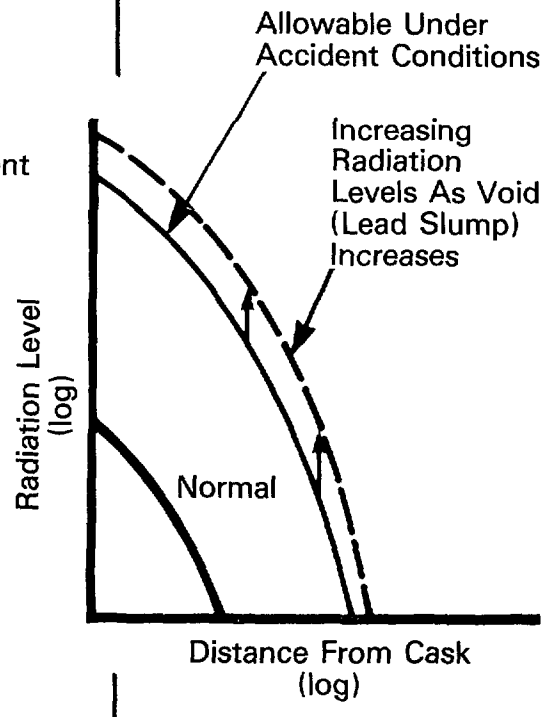

assigned for temperatures in the 650°F to 1050°F range. As is the case for accidents causing extremely large structural strains, no historical truck or rail accident could be specifically identified that would have the potential to cause shield temperatures above 1050°F.

Cask Damage—What Accident Conditions Are Important and How Are They Defined?

Damage Caused by Mechanical Loads

The most important accident conditions used to define the mechanical loads imposed on a cask during an accident are those associated with various impacts. Because of the large weight, hardness, and rigidity of spent fuel casks, loads caused by crushing, by projectiles, or by other mechanisms have been demonstrated to be far less damaging than loads caused by impacts with hard, massive objects. As in any impact involving a motor vehicle or train, the damage sustained would depend on vehicle speed, the angle of impact (a head-on or a side-swiping impact), the hardness and massiveness of the object struck, and the orientation of the vehicle or object at the time of impact (front, rear, or side impact).

● Velocity at Impact

Potential cask velocities on impact were principally based on records of truck and rail accidents. The truck information shown on page 6 was derived from a sample of truck accidents causing fatalities or injuries reported by the California Highway Patrol. The rail information was derived from mainline accident data available from the Federal Railroad Administration. For accidents involving falls, the velocity of impact was based principally on a survey of bridge heights along a typical section of interstate highway. The velocity of trains involved in truck impacts was derived from rail-highway grade-crossing accident information.

● Angle of Impact

The angle of impact between a cask-carrying truck or rail car and the object or surface hit was estimated for each of the accident scenarios shown on pages 7 and 9. For example, head-on impacts with objects such as bridge abutments and columns were estimated to be far more likely than a side-swiping impact. Specifically, about 40 percent of all impacts with columns or abutments were assumed to occur at an angle less than 20° from head on. About 21 percent were estimated to occur within 10° of head on.

● Hardness of Object Struck

The hardness and massiveness of the object struck was determined, for the most part, by the information from the accident scenarios described on pages 7 and 9. Surfaces, such as hard rock, soft rock, and clay/silt, were modeled to provide a conservative representation of the variety of possible surfaces occurring within these three "earth" classifications.

● Orientation at Impact

Cask orientation on impact was estimated for each accident scenario similar to the process used to determine the possible angles of impact. For impacts with slopes or in impacts with other vehicles, any orientation was considered equally likely. For impacts with bridge columns and abutments, all orientations were considered possible, but the most likely orientation was estimated to involve an impact with the front end of the cask.

Damage Caused by Thermal Loads

The temperature of an accident-generated fire is the most important consideration in assessing potential cask functional degradation. The cumulative heat affecting a cask depends not only on the temperature and duration of the fire but also on the extent to which the cask is exposed. Data on fire temperatures and durations are not readily available in accident records; however, conservative estimates of fire temperatures and duration can be calculated based on pertinent information about the accident. For example, the thermal loading to a cask involved in a collision with a tanker carrying flammable cargo can be estimated by knowing the maximum volume carried by a typical tank truck and the nature of the product being shipped (for example, gasoline). For accidents involving trucks or trains carrying nonflammable cargo, knowledge of fuel tank volumes and the types and amounts of combustible material typical of truck or rail car construction is sufficient to allow similar conservative estimates to be made.

The only accident condition that could not be based, even qualitatively, on recorded accident data was the location of a cask relative to a fire resulting from a transportation accident. In the absence of recorded data, the researchers provided estimates that would be prudently conservative. The result was a presumption that in all accidents involving fires, a truck cask would be located at or within 31.5 feet of the fire center, the chance of any specific location within this range being equally likely. For rail casks, this location parameter was broadened slightly to encompass a range of 0 to 43 feet. Beyond these ranges, the thermal loads were not significant.

POTENTIAL HAZARDS AND RISK

Fraction of Accidents Without Any Expected Radiological Hazards

For every 1000 truck or rail accidents involving spent fuel shipments that are capable of causing injury, death, or significant property damage, 994 would be expected to cause no significant radiological hazard. This estimate took into consideration cask responses to both mechanical and thermal accident loadings.

Mechanical Forces

- **Responses to "Non-Severe" Transportation Accidents**

How the cask responded to mechanical forces was first considered for the objects identified in the accident scenarios described on pages 7 and 9. Estimates were made of the maximum forces that could be generated by each object or surface when struck at any impact velocity. These estimates were compared to the force necessary to cause a cask's containment structure to begin to permanently yield or deform. Through this comparison, many scenarios involving impacts with "soft" targets are shown to cause no functional damage to a cask (see opposite page). (These scenarios are shown without an asterisk on pages 7 and 9.) To illustrate this process, consider damage to a truck caused by a variety of collisions with animals and pedestrians; motorcycles; automobiles; other trucks; and, finally, fixed objects. Collisions with animals, pedestrians, motorcycles, and, to some degree, with automobiles typically cause little truck damage. These objects are "soft" relative to the truck, and as a result incur most of the damage sustained in the accident. Shipping casks are massive, heavy structures so that the objects so indicated on pages 7 and 9 are indeed "soft" relative to the cask.

Summing the accident rates for truck accident scenarios involving impacts with a "soft" object provides a basis for concluding that these accidents describe about 950 out of every 1000 truck accidents. Such accidents would be unlikely to cause any functional cask damage. For the railroad accident scenarios, "soft" object impacts would occur in about 960 of every 1000 railroad accidents.

- **Responses to "Hard" Object Impact Accidents**

In accidents involving cask impacts with potentially massive and/or hard objects (see the scenarios marked with asterisks on pages 7 and 9), the possibility of cask functional damage is controlled by accident-specific parameters. For example, a truck carrying a spent fuel cask could hit a bridge column at 60 miles per hour. If the truck and cask side-swipe the column, however, the effective impact velocity (cask-vehicle velocity perpendicular to the column) could be only a few miles per hour and the resulting forces would be insufficient to damage the cask functionally. A second possibility is that the truck hits the bridge column or abutment head on but the truck and cask are traveling at less than 30 mph. Because current regulations require that a cask be subjected to a 30-mph impact on an unyielding surface without sustaining unacceptable damage, any impact of less than 30 mph on a generally flat surface would not be expected to cause functional damage. When these combinations of possible accident parameters are taken into account, at least 44 out of every 50 accidents involving impacts with "non-soft" objects or surfaces would be expected to cause no functional damage to a cask. The same outcome is anticipated for railroad accidents: conversely stated, a maximum of about 6 accidents out of every 1000 have the potential to cause some degree of cask functional damage.

Accident Scenarios Generating Mechanical Forces Incapable of Causing Functional Cask Damage

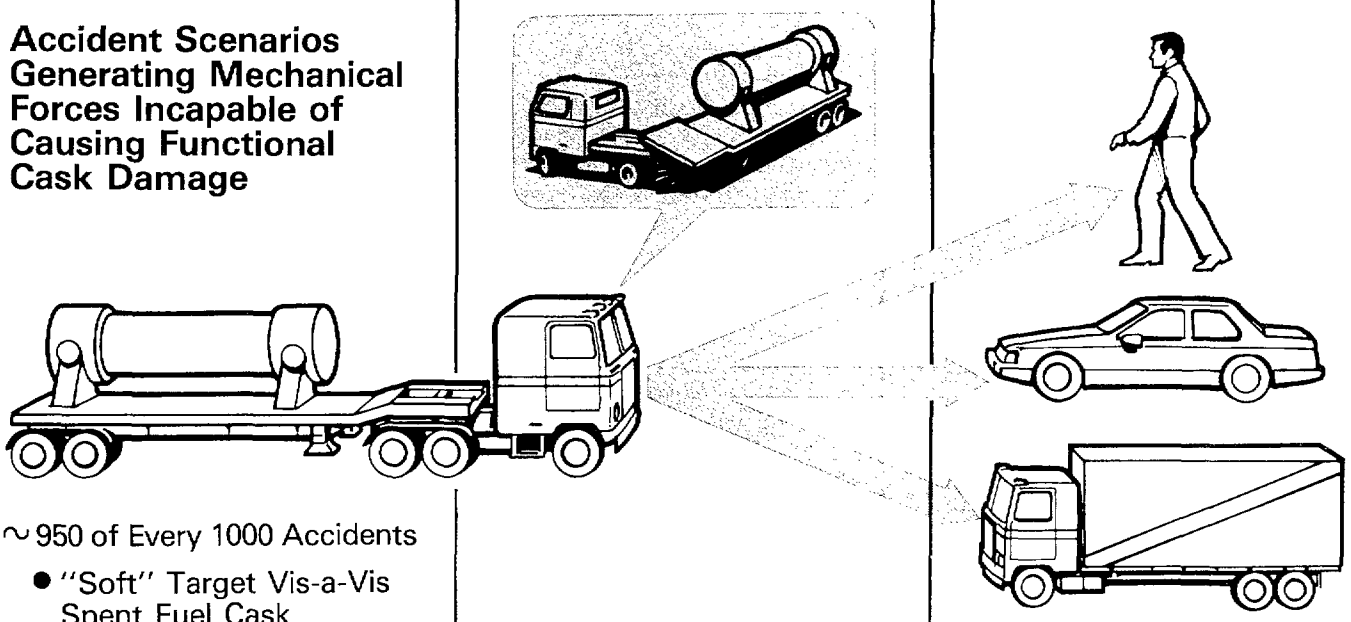

~950 of Every 1000 Accidents

- "Soft" Target Vis-a-Vis Spent Fuel Cask

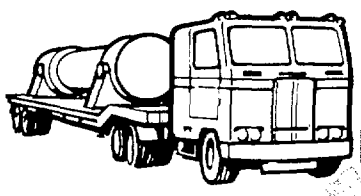

~44 of Remaining 50 Accidents

One or More of the Following Apply:

- Velocity Too Low
- Impact Angle Too Shallow

Conclusion:

994 of Every 1000 Truck Accidents Generate Mechanical Forces Incapable of Causing Cask Functional Damage.

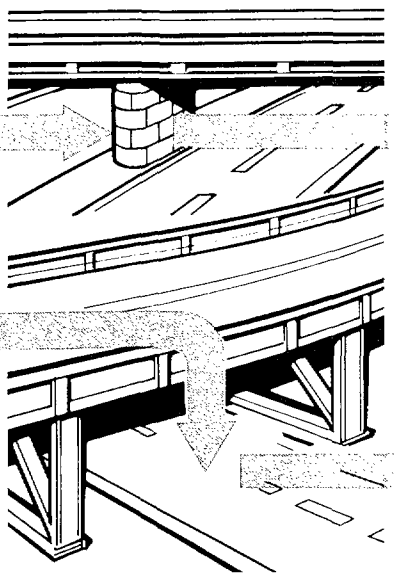

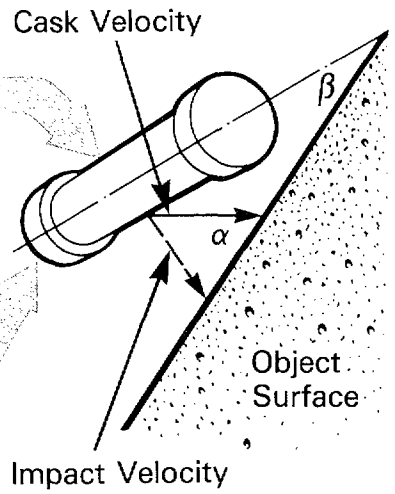

α = Impact Angle

β = Cask Orientation Angle

POTENTIAL HAZARDS AND RISK

Thermal Forces

Cask damage from fires could cause melting of the lead shield or degradation of the closure seal. Either form of damage requires that the affected component reach temperatures in excess of 500°F. The mass and heat capacity of spent fuel casks are large. For a truck cask to reach such a temperature, it would have to be engulfed in a 1700°F fire for over an hour. For the larger representative rail cask to sustain equivalent damage, it would have to be engulfed for an estimated 1.35 hours. With few exceptions, only about 1% of the accidents in the truck and rail accident scenarios listed on pages 7 and 9 involve fires. Many of these fires would be fed by diesel or gasoline fuel from the truck or other vehicle involved in a highway accident, or from diesel fuel, lubricants, and rail car structural materials in railroad accident scenarios. These types of fires would not be expected to generate the heat necessary to cause functional cask damage. Furthermore, these types of fires are generally localized and not likely to completely engulf a cask over 16 feet long and 5 feet in diameter. The potential for functional cask damage from fires is therefore limited to accidents involving tanker trucks, locomotives, and tank cars with large quantities of flammable materials.

The approach taken to calculate cask responses to fires was to determine the likelihood that a fire would occur given a specific truck or train accident scenario defined on pages 7 and 9. Each scenario was assigned one of eight fire duration estimates (five for truck and three for rail accidents), two of which are shown on the upper figure on page 8. For rail accidents, a significant fraction of fires were assumed to have long durations (1 of 8 for the accident scenarios illustrated on page 9 were assumed to last longer than 1 hour). For truck accidents with other trucks or with trains, a similar fraction of fires exceeded 1 hour. Only for truck accidents involving no collision, a collision with a fixed object or a collision with an automobile were the fire durations limited so that only about 1 percent or less exceeded 1 hour. This assessment reflects the likelihood that fire durations would be limited by the amount of fuel in the fuel tanks of the vehicle involved in the accident.

These estimates were chosen conservatively because of the lack of actual accident data. The likelihood distribution applicable to fire temperatures is shown in the bottom figure on page 8. A large fraction of fires were assigned temperatures in excess of those typical in such accidents.

The fire temperatures and duration parameters, when considered with the potential for cask involvement in any accident-caused fire, resulted in the prediction that less than 1 of every 1000 truck or rail accidents has the potential to cause a fire capable of compromising cask safety. This conclusion is illustrated on the opposite page.

Accident Scenarios Generating Thermal Forces Incapable of Causing Functional Cask Damage

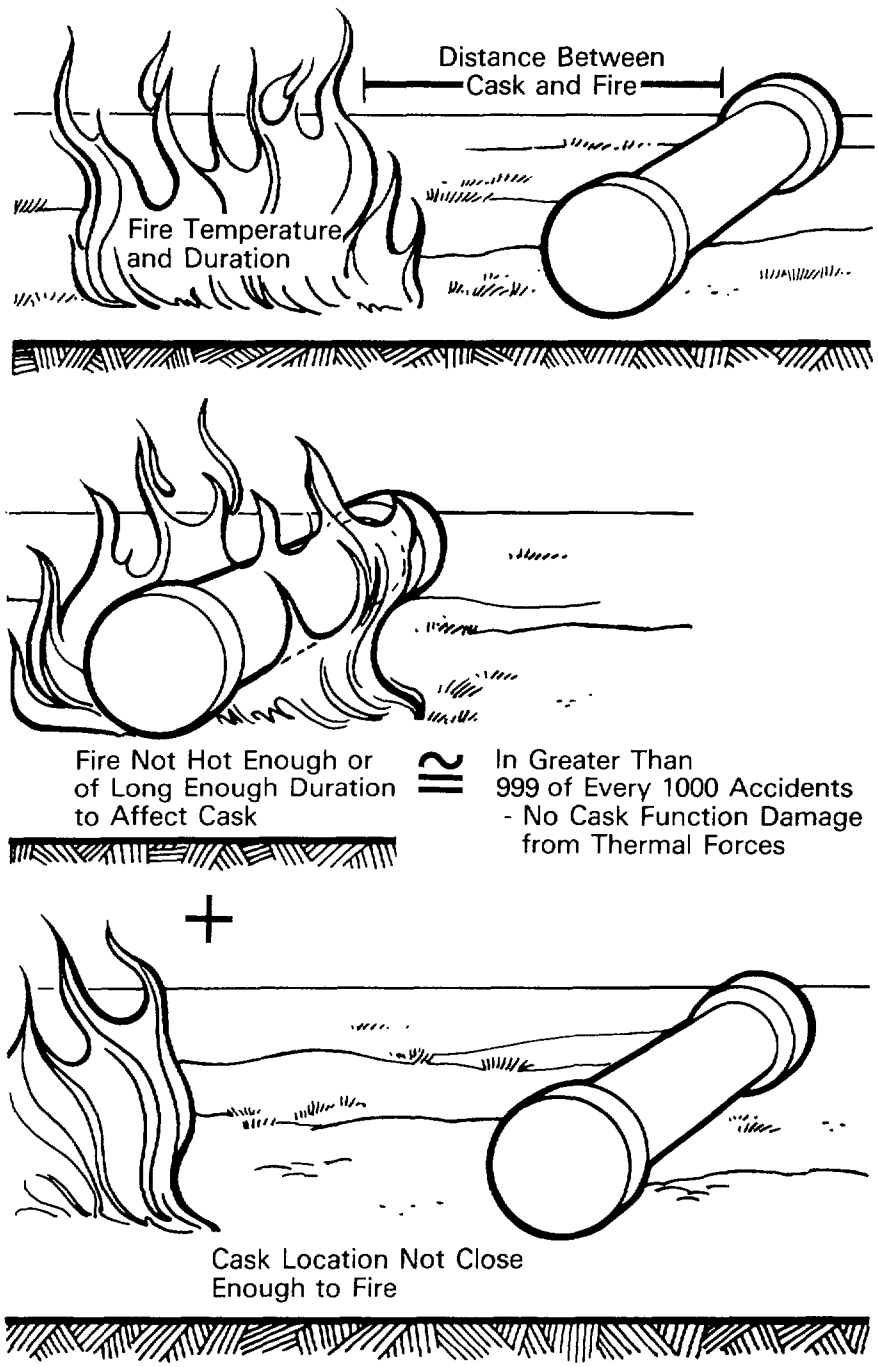

POTENTIAL HAZARDS AND RISK

Potential Radiological Hazards Resulting From Functional Cask Damage

The evaluations described on pages 22 through 25 indicate that less than 6 of every 1000 truck accidents and 6 of every 1000 rail accidents could cause some functional cask damage. Damage to the cask could lead in turn to radiological hazards caused by either (1) the release of radioactive material from the cask's containment, or (2) an increased level of radiation emanating from the spent fuel within the cask caused by a degradation in a cask's shielding. The magnitude of any radiological hazard will vary depending on the extent of the cask's damage—the hazard tending to increase in magnitude as cask damage increases. In order to evaluate this variability in the potential hazard, three broad areas of cask response were characterized (see the figure on the opposite page).

Most of the accidents capable of causing any functional cask damage produce the limited responses shown within the gray area of the figure. In fact, of the 6 truck accidents out of every 1000 capable of causing any functional damage, about 4 are estimated to result in a cask response within this region. Similarly, 4 of the 6 damage-producing rail accidents are estimated to generate similar levels of damage. In this gray area, containment vessel structural damage is limited (to strains of less than 2 percent) and cask gamma radiation shield temperatures within the body of the cask are typically below melting temperatures (less than 600°F compared with the lead-melt temperature of 621°F). Note that other casks which do not use lead as a shield material would be expected to experience little, if any, shield damage. At this level of response, any radioactive materials released from the cask would exist as a gas and only a small fraction would occur either in volatile form or as small solid particles in an aerosol. Furthermore, little degradation of the cask's shielding would be expected since the mechanical and thermal forces imposed on the cask are insufficient to cause significant shield "slump" or voiding. In quantifying the potential magnitude of any radiological release created by responses in this area, researchers estimated that the magnitude of any release was likely to be *less* than compliance values applied to casks after they have been subjected to the hypothetical accident conditions described on page 5.

In the large open area, structural damage to a cask's containment could be significant, although gross rupture of the cask's containment shell would not be expected. The heat could melt lead in the shield, resulting in voids and increased external radiation levels. For cask responses in the large open area, radioactive material releases and/or external radiation levels potentially could slightly exceed existing regulatory compliance values. Just about 2 of every 1000 truck and rail accidents involving a spent fuel shipment are conservatively predicted to be capable of causing this level of radiological hazard.

Finally, only about 1 in every 100,000 truck accidents and 1 in every 10,000 rail accidents are calculated to lead to cask damage as described in the outer ring of response regions. No documented accident can be specifically identified that can cause this degree of cask damage. As indicated on pages 16 through 20, the radiological consequences of events in the outer ring were hypothesized because of the extensive and potentially varied nature of cask and spent fuel damage. Similarly, the potential for a loss of the cask's subcriticality function would be expected to be restricted to a small fraction of the "outer ring-type events" in which sufficient quantities of water were physically present.

Fraction of Truck and Rail Accidents Involving Spent Fuel Shipments that Cause Cask Responses Within Each Response Region

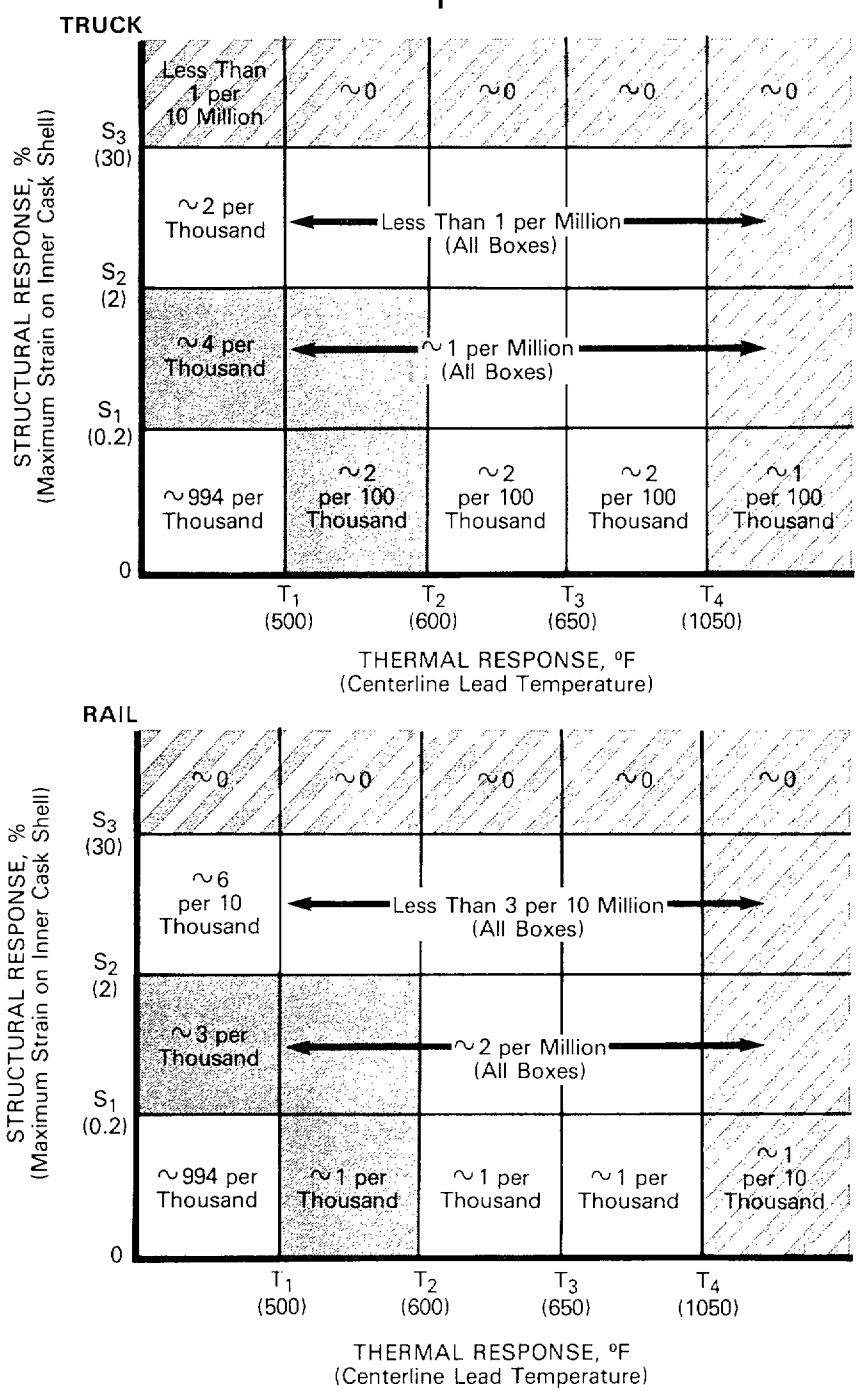

Note: Numbers have been rounded off.

POTENTIAL HAZARDS AND RISK

Interpretation of the Relationship Between Potential Radiological Hazards and Real-World Severe Accidents

Predicting the likelihood and magnitude of any radiological hazard in a severe transportation accident is not an exact science. The forces applied to the spent fuel shipment in extremely severe accidents are based on extrapolations of historical accident data, the evidence from physical tests, and predictions from engineering models using conservative assumptions. What is clear is that as the severity of accidents increases, the extent of possible damage to casks and spent fuel also increases.

This summary report has described the processes and results used to assess the level of safety for spent fuel shipments. To better understand the results, two further interpretations of the level of safety can be made. First, an illustration of the relationship between potential radiological hazards and some understandable accident parameters is provided in the illustration on the opposite page. The illustration applies to truck shipments of spent fuel subjected to mechanical forces. The expected yearly accident event frequencies, indicated on the figure, include consideration of predicted spent fuel shipment activity and a truck accident rate of 6.4 accidents per million truck miles. It is important to remember that the statements on event likelihoods apply to the performance of the defined representative cask designs—real cask designs are expected to provide a greater level of safety in transportation accidents.

The second interpretation involves the prediction of the performance of the representative cask designs if they had been involved in certain historically documented, severe transportation accidents. Four specific events were selected from about 400 severe accidents that, in turn, were selected from a much broader DOT data base. The description of the four events and the predictions of cask response are illustrated on a portion of the figure on the opposite page.

Together, these results are believed to present a fair picture of the minimum level of safety provided during shipments of spent fuel. The reader is encouraged to refer to the LLNL report for a complete interpretation of the studies approach and results.

Risk Estimate for Spent Fuel Shipments

"Risk" and "expected value" are two of several measures used to predict future occurrences based on past experience in fields ranging from safety to sports. In this study, historical information on truck and rail accidents was supplemented by route survey data to predict the occurrence frequency of severe transportation accidents. Engineering models were then used to predict how a spent fuel shipment would respond in these accidents and what magnitude of radiological hazard might be created. A risk measure was determined by multiplying the magnitude of each potential hazard by its occurrence frequency and summing all the resulting values.

This type of risk measure has a regulatory precedent applicable to this study. In December 1977, a study that evaluated the risk for all radioactive material shipments, including spent fuel, was published as a Final Environmental Statement (FES).* The evaluations contained in the FES indicated a radiological risk from transportation accidents of one latent cancer fatality every 59 years for all projected 1985 radioactive material shipments. Most of this risk was associated with shipments of medical radioisotopes. The contribution from spent fuel shipments was 2.5 percent of this estimate.

* "Transportation of Radioactive Material by Air and Other Modes," NUREG-0170, December 1977.

Accident Scenarios Generating Mechanical Forces Potentially Capable of Causing a Radiological Hazard

Occurrence Rate
= 6 Events per 1000 Accidents
= One Accident Expected Every 10 Years (Assuming ~3 Million Shipment Miles Per Year)

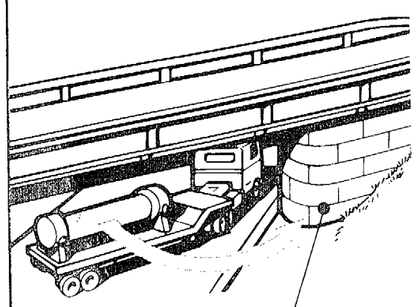

"Non-Soft" Object

Cask Velocity Normal to Surface or Object - Between 32 mph and 50 mph

4 Events per 1000 Accidents or 1 Expected Event Every 14 Years

~2 Events per 1000 Accidents or 1 Expected Event Every 35 Years

Cask Velocity Normal to Surface or Object - Between 50 mph and 75 mph

Less Than 1 Event per 10 Million Accidents or No Expected Events During Repository Shipments

Cask Velocity Normal to Surface or Object - Exceeds 75 mph

POTENTIAL MAGNITUDE OF RADIOLOGICAL HAZARD

- Material Releases (Primarily Gases and Volatiles) Less Than Compliance Values*
- No Significant Increase in External Radiation Levels

- Material Releases (Primarily Gases and Volatiles) Could Exceed Compliance Values* by a Small Factor (i.e., 2 or 3 Times)
- External Radiation Levels Could Equal or Slightly Exceed (by a Factor of ~3) Compliance Values*

- Material Releases Estimated to Exceed Compliance Values* by About a Factor of 20 Dependent on the Specifics of the Accident
- External Radiation Levels Estimated to Exceed Compliance Values* by a Factor of 30 Dependent on the Specifics of the Accident

*Compliance Values as Defined in Current Regulations

Predicted Cask Response to Selected Historical Accident Events

CALDECOTT TUNNEL FIRE - 4/82

- 3-Vehicle Collision — Gasoline Truck-Trailer, Bus and Automobile
- 8,800 Gallons of Gasoline
- Fire of 2 Hours and 42 Minutes - 40 Minutes @ 1900°F

Predicted Cask Response

- No Significant Impact Damage - "Soft" Objects
- 45 Minutes @ 1900°F Causes 500°F Centerline Temperature

I-80 BRIDGE ACCIDENT - 3/81

- Collision With Pickup Truck and Fall from 64-Foot High Bridge Onto Soil

Predicted Cask Response

- 44 mph Impact
- No Significant Impact Damage

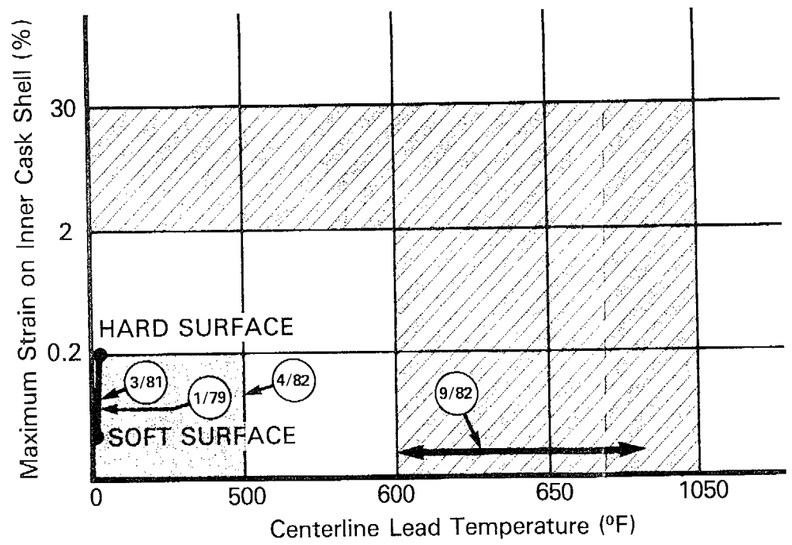

No Radiological Hazard

Radiological Hazard Approximates Compliance Values*

Radiological Hazard Exceeds Compliance Values By Up to a Factor of 4

LIVINGSTON TRAIN FIRE - 9/82

- Derailment of Vinyl Chloride/ Petroleum Tank Cars
- Large Fires for Several Days Moved Over Large Area
- 2 Explosions

Predicted Cask Response

- Maximum Probable Cask Exposure to Petroleum Fire - Between 82 Hours and 4 Days
- No Significant Damage from Explosion
- Centerline Shield Temperature Between 600°F and 720°F Dependent on Degree of Cask Involvement

DERAILMENT ON ALABAMA RIVER BRIDGE -1/79

- Plunge Off 75-Foot High Bridge
- Railcar Impacts Into Water and Mud

Predicted Cask Response

- 47 mph Impact in Soft Target
- No Significant Impact Damage

POTENTIAL HAZARDS AND RISK

In the FES, the predicted performance of radioactive material packages was based, for the most part, on engineering models and conservative engineering judgments. The LLNL study, on the other hand, focused entirely on spent fuel shipments and provided a detailed engineering analysis of package or cask performance under severe transportation accident conditions. The table on this page compares the results from the two studies.

The LLNL study included a more detailed approach to the calculation of radiological hazards that involved the consideration of releases of radioactive material as small inhalable particles. Any solid material release from a cask would require the creation of a direct release pathway from both the containment provided by the fuel rod and the cask (that is, a pathway much more direct than one needed for gaseous or volatile material releases). With the assumption of such a pathway and the presumed release of solid material,* the risk, as calculated in the LLNL study, is shown in the following table to be less than one-third of the values estimated in the FES. Therefore, to the extent that the Commission's conclusion on the adequacy of NRC regulations were initially valid and were dependent on the FES risk estimates, the LLNL study has not identified any increase in risk that would change the Commission's conclusion.

RISK RESULTS - COMPARISON WITH PAST FES EVALUATION

	FES (NUREG-0170) ESTIMATES	LLNL STUDY RESULTS
Fraction of Transportation Accidents Involving Spent Fuel Shipments Causing Any Radiological Hazard	0.09 (Truck) 0.20 (Rail)	0.006 (Truck) 0.006 (Rail)
Fraction of Transportation Accidents Involving Spent Fuel Shipments Causing Largest Estimated Radiological Hazard	0.004 (Truck) 0.002 (Rail)	0.00001 (Truck) 0.00013 (Rail)
Overall Annual Risk From Transportation Accidents Involving Spent Fuel Shipments	0.0004 Latent Cancer Fatalities Per Year	Less Than 1/3 of FES Value

*A shipping cask has been subjected to attack by explosive to evaluate cask and spent fuel response to a device 30 times larger in explosive weight than a typical anti-tank weapon. This device would carve an approximately 3-inch-diameter hole through the cask wall and contained spent fuel and is estimated to cause the release of 2/100,000 of the total fuel weight (~10 grams of fuel) in an inhalable form. No transportation accident can be identified that would impose anywhere near the energy per unit volume caused by this explosive attack.

Notes

NUREG/BR-0111