CIMARRON CORPORATION LETTER OF TRANSMITTAL

DATE : 12/30/2003

TO: Mr. Ken Kalman
United States Nuclear Regulatory Commission
NMSS/DWM/DCB
Mail Stop 7 F27
Room 7 E69
Washington, D.C. 20555-0001

FROM: Quality Assurance Coordinator
Cimarron Corporation
P.O. BOX 315
Crescent, OK 73028

☐ First Class Mail
☒ Overnight–Fed Ex
☐ Second Day–Fed Ex
☐ Internal
☐ UniShippers
☐ Other _____
☐ Overnight–UPS
☐ Second Day Air–UPS

COPY NO.	DATE	DESCRIPTION
2	*Dec. 30, 2003*	*Draft Technitium-99 Groundwater Assessment Report* *Docket No. 70-925; License No. SNM-928*

These are transmitted as checked below:

☐ For Approval
☐ As requested
☐ Disapproved
☐ Approved as submitted
☐ Returned for corrections
☐ For review and comment
■ For your use
☐ Return ____ corrected prints
☐ Controlled copy

REMARKS: The above item(s) is for your use. Please sign and return transmittal letter.

NOTE:

SIGNATURE: LaDonna Smith

ACKNOWLEDGMENT OF RECEIPT PLEASE RETURN ONE SIGNED COPY TO SENDER

I HAVE RECEIVED THE DOCUMENTS IDENTIFIED ABOVE AND THE PRIOR REVISIONS OF THESE HAVE BEEN DESTROYED N/A VOIDED N/A -

PRINTED NAME OF RECIPIENT: _____

SIGNATURE OF RECIPIENT: _____

DATE RECEIVED: _____

If enclosures are not noted, kindly notify Cimarron Corporation at once.

NMSS01

CHASE ENVIRONMENTAL GROUP, INC.
environmental remediation, engineering & consulting

TECHNETIUM-99

GROUNDWATER ASSESSMENT REPORT

for

Cimarron Corporation's Former
Nuclear Fuel Fabrication Facility
Crescent, Oklahoma

December 2003

License Number: SNM-928
Docket Number: 70-0925

Cimarron Corporation
Crescent, Oklahoma

11450 Watterson Court
Louisville, Kentucky 40299-2389

(502) 267-1455
FAX (502) 267-7299

CIMARRON CORPORATION

P O. BOX 315 • CRESCENT, OK 73028

December 30, 2003

Mr. Kenneth Kalman
Low-Level Waste & Decommissioning Projects Branch
Division of Waste Management
Office of Nuclear Materials Safety & Safeguards
U. S. Nuclear Regulatory Commission
Washington, D. C. 20555

Re: Docket No. 70-925; License No. SNM-928
Draft Technitium-99 Groundwater Assessment Report

Dear Mr. Kalman:
Cimarron Corporation (Cimarron) submits herein three (3) copies of "Draft Technetium-99 Groundwater Assessment Report". This report presents the results of the investigation performed in accordance with "Technetium-99 Site Impact Evaluation and Proposed Groundwater Assessment Workplan". This report describes the hydrogeology of the subject areas, presents groundwater concentration data generated during the investigation, and delineates the extent of Tc-99 in groundwater in these areas.

This report is the result of a comprehensive effort to identify both the maximum concentration of Tc-99 in groundwater, to determine the extent of Tc-99 impact in groundwater, and to conclusively demonstrate that groundwater remediation for Tc-99 is not required at the Cimarron site to comply with the release limit of 3,700 pCi/L.

If you have questions or comments, please call me at (405) 642-5152.

Sincerely,

Jeff Lux
Manager, Planning and Regulatory Compliance

xc: Blair Spitzberg, NRC Region IV

TECHNETIUM-99

GROUNDWATER ASSESSMENT REPORT

for

Cimarron Corporation's Former
Nuclear Fuel Fabrication Facility
Crescent, Oklahoma

December 2003

License Number: SNM-928
Docket Number: 70-0925

Cimarron Corporation
Crescent, Oklahoma

TABLE OF CONTENTS

Tc-99 ASSESSMENT

1.0 INTRODUCTION .....
2.0 SITE GEOLOGY AND HYDROGEOLOGY .....
2.1 Permian Bedrock Water Bearing Zones and Confining Strata .....
2.2 Sandstone A Seeps .....
2.3 Alluvial Aquifer Recharge Mechanisms .....
2.4 Hydrogeologic Summary .....
3.0 ASSESSMENT PLAN / FIELD ACTIVITIES .....
4.0 SEDIMENTARY CHARACTERISTICS OF ALLUVIAL DEPOSITS .....
5.0 GROUNDWATER FLOW DIRECTION .....
5.1 Direction of Groundwater Flow in Sandstone A Hydrogeologic Unit .....
5.2 Direction of Groundwater Flow in Sandstone B Hydrogeologic Unit .....
5.3 Direction and Rate of Groundwater Flow in Alluvial Aquifer .....
6.0 ANALYTICAL DATA PRESENTATION – U-POND #1 .....
6.1 Analytical Data (Sandstone A) .....
6.2 Analytical Data (Sandstone B) .....
6.3 Analytical Data (Alluvial Wells) .....
6.4 U-Pond #1 Area Summary .....
7.0 ANALYTICAL DATA PRESENTATION – U-POND #2 .....
7.1 Analytical Data (Sandstone A) .....
7.2 Analytical Data (Sandstone B) .....
7.3 Analytical Data (Alluvial Wells) .....
7.4 U-Pond #2 Area Data Summary .....
8.0 CONCLUSION .....
9.0 REFERENCES .....

ATTACHMENTS

A. Boring Logs and Well Construction Diagrams
B. U-Pond #1 & #2 Areas (Well Location Drawing)
C. Table 1 – Summary of New Well Construction Details
Table 2 – Summary of Measured Groundwater Elevations
Table 3 – Potential Groundwater Hydraulic Gradients
D. Groundwater Potentiometric Surface Sandstone (A) Water Levels 9/16/03
E. U-Pond #1 Area Analytical Data
F. Trend Analyses for Gross Beta and Tc-99 for Wells 1312 and 1313
G. U-Pond #2 Area Analytical Data
H. Trend Analyses for Gross Beta and Tc-99 for Well 1336 and Seep 1208

TEXT

TECHNETIUM-99 GROUNDWATER ASSESSMENT REPORT

1.0 INTRODUCTION

The purpose of this Report is to present results from the Technetium-99 (Tc-99) groundwater assessment performed for the Cimarron Site. In response to the Nuclear Regulatory Commission's (NRC's) March 12, 2002 letter[1] requesting a further evaluation of the presence of Tc-99 in groundwater at the Cimarron site, Cimarron Corporation completed a "Technitium-99 Site Impact Evaluation and Proposed Groundwater Assessment Work Plan[2]" (Work Plan). This Work Plan discussed the hydrogeology of the site in general terms, provided a summary of historical groundwater data related to Tc-99, and presented Cimarron's understanding of the origin, occurrence, and extent of Tc-99 in groundwater at the site. The data included in the evaluation demonstrated that elevated levels of Tc-99 are present downgradient from the two former waste management areas (U-Pond #1 and U-Pond #2) and are, in general, not present at concentrations above laboratory detection levels anywhere else on site. The Work Plan proposed an assessment to further evaluate the levels of Tc-99 in groundwater downgradient from the two U-Pond areas that have been previously impacted by Tc-99. This Report discusses the results of the assessment performed under that Work Plan.

2.0 SITE GEOLOGY AND HYDROGEOLOGY

As discussed in numerous site characterization and groundwater monitoring reports and work plans, groundwater at the site is encountered in the unconsolidated alluvial deposits of the Cimarron River floodplain and in water-yielding consolidated sandstone units of the upland Permian-aged Garber Sandstone–Wellington Formation (Garber-Wellington Formation). The Garber–Wellington Formation is the regional bedrock formation that underlies the site and the Cimarron River. The Garber–Wellington Formation is a consolidated sequence of interbedded sandstones, mudstones, and shales that is approximately 1800 feet in thickness. The Cimarron River (a shallow ephemeral stream system typical of western-state semi-arid environments) is deeply entrenched into the Permian bedrock formation. At the site, the river has formed a broad alluvial floodplain that is approximately 2200 feet wide that is flanked by the active meandering channel of the Cimarron River to the north and a system of low-lying bluffs to the south (See Figure 1). The former U-Ponds of the Cimarron site are located in an upland area several hundred feet south of the low-lying bluffs. In the area of the Tc-99 assessment, the alluvial floodplain is part of a broad expanse of sandy sediments deposited as a laterally accreting point bar of the Cimarron River. The low-lying bluffs are formed by erosion-resistant sandstone and mudstone units of the Permian bedrock which have been exposed as a result of the Pleistocene carving and entrenchment of the Cimarron River meander belt.

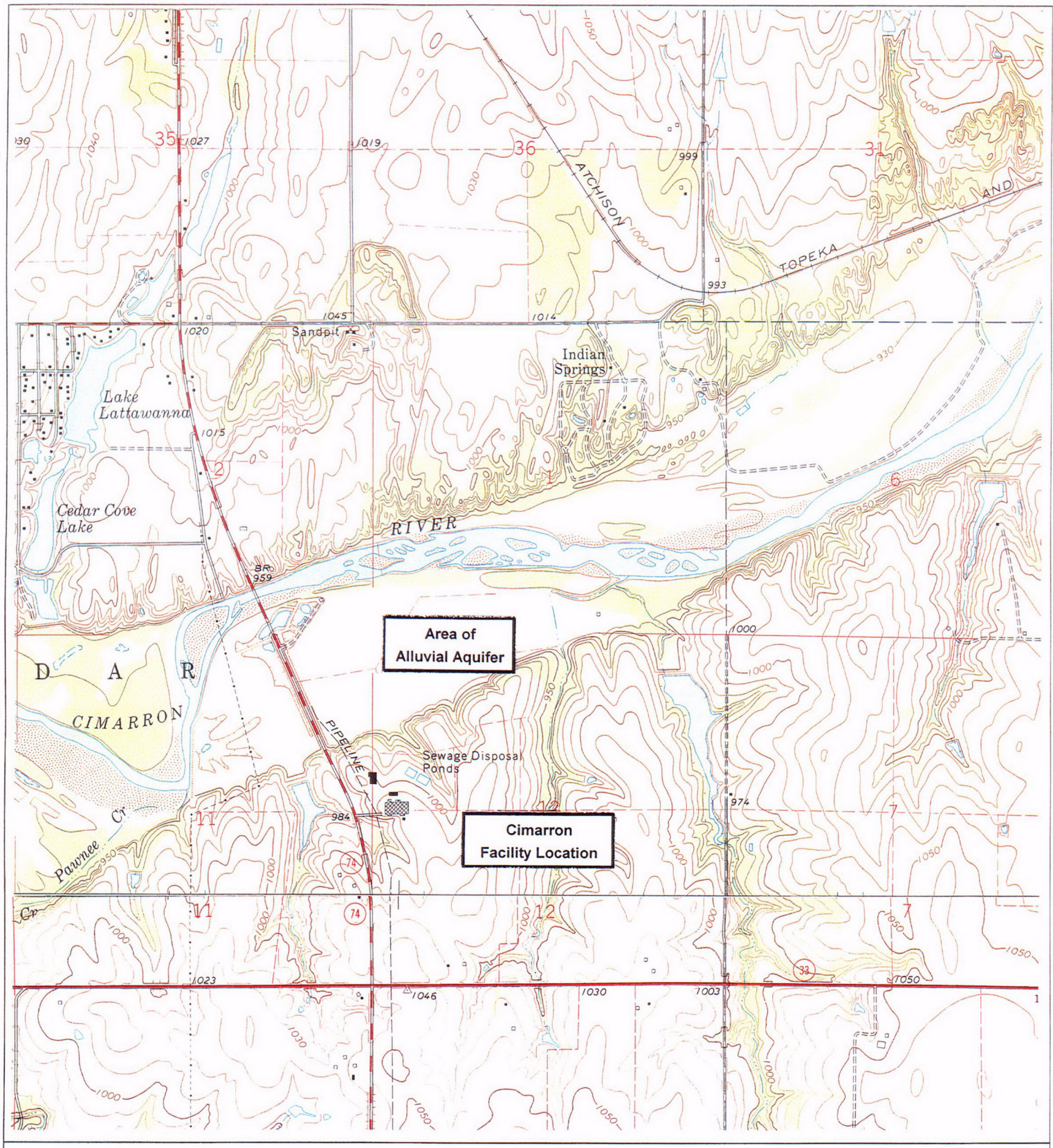

Source:
U.S. Geological Survey

CRESCENT, OKLA.
7.5 Minute Topographic Quadrangle
N3552.5-W9730/7.5
1970, Photo Inspected 1981
and

NAVINA, OKLA.
7.5 Minute Topographic Quadrangle
N3545-W9730/7.5
1970

1000 0 1000 2000
Graphic Scale
1" = 2000'

North

Cimarron
Site Location Map

Chase Environmental Group, Inc.
environmental engineering, remediation & consulting
11450 Watterson Ct., Louisville, Kentucky 40299
9470 Highway 60 West, Kevil, Kentucky 42053
608-B Simmons Road, Knoxville, Tennessee 37932
Louisville 502-267-1455 Kevil 270-488-2584
Knoxville 865-584-0833

Date: 01-22-03
Project Mgr.:
Project: C406003
Figure 1

C01

In the area of assessment, the bluffs are approximately 40 to 50 feet high and are nearly vertical. The northerly facing bluffs are approximately 1250 feet downgradient from the former U-Ponds. The site topography slopes in a northerly direction toward the bluffs and floodplain of the Cimarron River to the north. The former U-Ponds were located at an elevation of approximately 990 to 995 feet above mean sea level (MSL) and the top of the bluffs (in the areas downgradient from the former U-Ponds) are at an elevation of approximately 975 to 980 feet MSL. The direction of surface drainage and shallow groundwater flow is in a northerly direction toward the bluffs and alluvial floodplain. In the upland areas of the site (i.e., areas located upgradient from the face of the low-lying bluffs), the direction of shallow groundwater flow may be influenced by local topography such as surface drainage ravines.

2.1 Permian Bedrock Water Bearing Zones and Confining Strata

The Permian bedrock at the site includes three water-bearing zones that have been characterized as Sandstone A, Sandstone B, and Sandstone C. The water-yielding sandstone units are separated by less-permeable mudstone units that act as confining strata and/or aquitards that limit and/or preclude the potential downward migration of groundwater. The mudstone units are laterally continuous across the site and have been characterized as Mudstone A (separating Sandstone A and Sandstone B) and Mudstone B (separating Sandstone B and Sandstone C). In the areas downgradient from the former U-Ponds, Sandstone A is encountered at a depth of approximately 20 feet; Sandstone B is encountered at a depth of approximately 40 feet; and Sandstone C is encountered at a depth of approximately 70 feet.

2.2 Sandstone A Seeps

In the area of the Tc-99 assessment, groundwater from the base of Sandstone A is known to "daylight" at a series of seeps located on the face of the low-lying bluffs. Most of the seeps bear water in response to seasonally high groundwater elevations with only a few of the seeps being active year-round, including the dry season from mid-summer through late fall.

2.3 Alluvial Aquifer Recharge Mechanisms

The Cimarron River north of the site is characterized as a gaining stream. This means that base flow in the river occurs as a result of continuous groundwater discharge from the alluvial aquifer. The alluvial aquifer in turn is recharged as a result of surface infiltration, including bluff-face seepage from Sandstone A, and as a result of groundwater flow from the water-bearing units of the underlying bedrock (i.e., the Garber-Wellington Formation including sections of Sandstone B and Sandstone C).

In Pleistocene time, the ancient Cimarron River carved a deep channel into the underlying bedrock (i.e., the sandstones, mudstones, and shales of the Garber-Wellington Formation). As a result of fluvial depositional processes, a portion of the meander belt channel has subsequently been filled with up to 28 to 30 feet of unconsolidated deposits of mostly sand with minor amounts of gravel, silt, and clay. The alluvial deposits are in

erosional (unconformable) contact with the water-bearing bedrock units that have been identified at the site including Sandstone B and part of Sandstone C. As a result of upland hydraulic head and subsurface exposure and/or contact with the alluvial deposits, groundwater from Sandstone B and Sandstone C is continuously discharged to the alluvial aquifer. Shallow groundwater encountered in Sandstone A is discharged to a system of seeps located along the face of the low-lying bluffs. The seeps have developed along the contact of the Sandstone A with the underlying Mudstone A (which acts as a confining layer and/or aquitard).

Groundwater in Sandstone A is recharged from upland sources, from on-site reservoirs, and from surface infiltration. Groundwater in the deeper zones (Sandstone B and Sandstone C) is recharged regionally at upland outcrop areas.

2.4 Hydrogeologic Summary

In summary, groundwater in the alluvial aquifer and in the upland bedrock sandstones (i.e., Sandstones A, B and C) migrates in a northerly direction toward the Cimarron River. In the upland areas, confining mudstone strata effectively separate the groundwater zones of Sandstones A, B, and C. These mudstones have low permeability characteristics and limit the potential downward migration of shallow groundwater found in the A and B sandstone units. Shallow groundwater in Sandstone A discharges to a series of seeps on the face of the low-lying bluffs. A limited number of the seeps discharge on a continuous, year-round basis. During seasonally high groundwater periods, groundwater in Sandstone A may also flow and discharge in a lateral direction toward local ravines and surface drainage pathways. Groundwater in Sandstone B and Sandstone C similarly flows in a northerly direction and discharges on a continuous basis to the subsurface deposits of sand and silt in the alluvial aquifer. In the upland bedrock areas, the groundwater flow direction, confining mudstone strata, and seepage faces limit the potential for contaminant migration into the deeper groundwater zones and support the premise of monitoring the first major sandstone for the potential migration of radionuclides.

3.0 ASSESSMENT PLAN / FIELD ACTIVITIES

Because of the elevated concentrations of Tc-99 in groundwater downgradient from the two U-Ponds, Cimarron proposed further groundwater assessment and hydrogeologic characterization for the upland bedrock sandstone and for the alluvium of the Cimarron River north of the bluff area. The proposed Work Plan included the installation of two Sandstone B monitoring wells and eleven alluvial wells located below the bluffs south of the Cimarron River. Of the thirteen wells proposed, six wells were to be installed downgradient from the former U-Pond #1 area and seven wells downgradient from U-Pond #2. Subsequent sampling results for these new wells and thirteen other monitored locations (11 groundwater wells and 2 seeps) also were included with this Work Plan for a total of 26 monitored locations.

On November 13, 2002[3], the NRC approved Cimarron's Technetium-99 Site Impact Evaluation and Assessment Work Plan. With NRC's approval of the Cimarron Site

Assessment recommending that only the two U-Pond areas warranted further characterization, Cimarron implemented the Work Plan.

The Work Plan was implemented in phases in April 2003 with the first phase being the installation of the proposed thirteen new groundwater wells. Two bedrock wells were installed on the bluff, one north of former U-Pond #1 and one north of U-Pond #2 area. These bedrock wells were completed in Sandstone B which were installed in holes drilled through Sandstone A and Mudstone A. The A Sandstone was then cased to prevent downward migration from the A to the B Sandstones. The wells were screened into Sandstone B as specified in the Work Plan. The wells are numbered as follows:

- Sandstone B:
  U-Pond #1 well - 1345
  U-Pond #2 well - 1346

One additional well (i.e., 1347) was added to the assessment with the installation of a Sandstone A well between former U-Pond #2 and seep 1208. The boring logs and well construction drawings for the three wells are included in Attachment A. The locations of the new groundwater wells are shown on the well location Drawing included in Attachment B.

Below the bluff north of the two U-Pond areas, eleven alluvial borings were advanced to the top of bedrock. Depths for these borings ranged from 15 to 23.8 feet at locations near the bluffs. As the alluvium thickens to the north approaching the Cimarron River, depths reached up to 27 feet. The boring logs for these wells are included in Attachment A. The monitor wells were completed within each of these eleven borings with the installation of 2-inch PVC casing and screened across the full-saturated thickness of the aquifer. Screen lengths ranged from 10 to 15 feet in the vicinity of the bluffs. For the thicker alluvial material in the direction of the river, screen lengths ranged from 10 to 20 feet. Well construction logs are included in Attachment A. The wells are numbered as follows:

- Alluvium at the base of the bluff:
  U-Pond #1 Alluvial Area Wells - T-57 and T-58
  U-Pond #2 Alluvial Area Wells - T-54, T-55, and T-56

- Alluvium midway to Cimarron River:
  U-Pond #1 Alluvial Area Wells - T-51, T-52, and T-53
  U-Pond #2 Alluvial Area Wells - T-59, T-60, and T-61

The monitor wells were thoroughly developed to remove sediment and flush fines from the sand pack to improve the hydraulic communication between the well and the native sediment of the formation adjacent to the well screen. Each monitor well location and top-of-casing elevation was surveyed using survey-grade global positioning (GPS) equipment. X and Y state-plane coordinates were located and top of casing elevations were recorded to within 0.1 foot.

Monitor well installation and development, groundwater sampling, groundwater sample preservation and analysis, and monitor well abandonment were performed in accordance with the Cimarron Sampling and Analysis Plan (SAP).

The next phase of fieldwork included sampling and off-site analyses for the fourteen new wells. The initial sampling event occurred in April 2003 with a second sampling in June. Samples were collected and shipped overnight to an off-site laboratory for analysis (i.e., gross alpha, gross beta, and Tc-99).

Also in June, the other existing wells and seeps listed below were included in this sampling event:

Seeps:	1206	Wells:	1311	1325	1340
	1208		1312	1336	1341
			1313	1337	1343
			1320	1338	

After the initial well installations, NRC representatives conducting a site inspection, requested that two additional wells be installed in the alluvium at the base of the cliff just northwest of the former U-Pond #1. After receiving on-site analytical results from these two new wells, two additional wells were installed in the alluvium. These four alluvial wells were installed in July 2003 and groundwater samples were then collected for off-site analysis. These wells are shown on the drawing included in Attachment B and are numbered as follows:

- Alluvium at the base of the bluff:
  U-Pond #1 Wells - T-62, T-63, T-64, and T-65

Since the eighteen new wells and thirteen existing monitor locations (including two seeps and eleven wells) were sampled at different times, Cimarron felt it was important to complete a final sampling event of all locations per the Work Plan. All eighteen new wells and the thirteen existing environmental monitor locations were sampled in September 2003. Groundwater elevations were collected during each sampling event.

This groundwater Assessment Report includes the laboratory results for the U-Pond #1 area and U-Pond #2 area. It presents a refined assessment of the hydrogeology of the subject area, the extent of Tc-99 found in the environment, and the projected rate and direction of groundwater flow toward the Cimarron River. This Assessment Report is based primarily on data collected during the 2003 sampling events, but also references historical environmental data as appropriate.

4.0 SEDIMENTARY CHARACTERISTICS OF ALLUVIAL DEPOSITS

Fifteen (15) of the eighteen (18) new monitor wells installed for this groundwater assessment are located in the alluvial floodplain in areas downgradient from the former upland U-Pond locations. The alluvial floodplain in the two Tc-99 areas of assessment

are characterized as a broad alluvial plain formed by a point bar deposited by the Cimarron River. The Tc-99 areas of assessment, including the monitor well locations, are illustrated by the drawing included in Attachment B. The soil boring logs and monitor well construction logs for the fifteen alluvial deposit wells are provided in Attachment A.

Construction details for the fifteen (15) wells are summarized in Table 1 - Summary of New Well Construction Details included in Attachment C. Table 1 includes a summary of the type of unconsolidated sedimentary materials encountered at each drilling location (i.e., sand. silt, and/or clay). The results of drilling show that the under-lying floodplain deposits in the U-Pond areas of assessment are predominantly sand as is characteristic of a fluvial point bar deposit.

5.0 GROUNDWATER FLOW DIRECTION

Monitor well groundwater elevations were measured on September 16, 2003 and are reported in Table 2 - Summary of Measured Groundwater Elevations - Tc-99 Groundwater Assessment. This table is in Attachment C. The wells measured included wells screened in the Sandstone A and Sandstone B hydrogeologic units and the new wells installed in the alluvial floodplain. The monitor well groundwater elevation data has been used for the calculation of horizontal hydraulic gradients in the alluvial aquifer as well as Sandstone A and Sandstone B. Horizontal hydraulic gradients are reported in Table 3 - Potential Groundwater Hydraulic Gradients in Alluvial Aquifer, Sandstone A, and Sandstone B. This table is in Attachment C.

5.1 Direction of Groundwater Flow in Sandstone A Hydrogeologic Unit

The direction of groundwater flow in Sandstone A in the U-Pond areas of assessment is illustrated by the Sandstone A Groundwater Potentiometric Surface Drawing included in Attachment D. The direction of groundwater flow in the Sandstone A hydrogeologic unit is in a northerly direction toward the low-lying bluffs that border the alluvial floodplain. Groundwater from Sandstone A is discharged to a system of seeps that have developed on the face of the northward facing bluffs. The discharge zone is located at the base of Sandstone A at the contact of Sandstone A with the underlying Mudstone A. Mudstone A has low permeability characteristics and acts as an aquitard to limit the potential downward migration of Sandstone A groundwater. The seeps have been sampled in the past and the most prolific water producing seep (i.e., 1208) is included in the site's groundwater monitoring programs. Seep 1208 is located in an area downgradient from former U-Pond #2. Seep 1208 produces water on a year-long basis including the dry season that extends from mid-summer through late fall.

At times of seasonally high groundwater elevations, the direction of groundwater flow in Sandstone A may be influenced by the local topography and incised surface drainage system. These drainages have developed on the gently sloping hills and ravines that ramp downward in a northerly direction toward the bedrock bluffs that border the alluvial floodplain. Excepting the influence of local topography, the general direction of

groundwater flow in the Sandstone A hydrogeologic unit is in a northerly direction toward the bedrock bluffs that border the alluvial floodplain as previously reported.

5.2 Direction of Groundwater Flow in Sandstone B Hydrogeologic Unit

The Sandstone B groundwater flow direction continues to be in a northerly direction toward the bluffs and toward the alluvial aquifer. Measurement and interpretation of Sandstone B groundwater elevation data (combined with other site elevation data such as drilling logs and cross-sections) shows that groundwater in Sandstone B discharges to the subsurface alluvial aquifer. See Table 3, Attachment C.

5.3 Direction and Rate of Groundwater Flow in Alluvial Aquifer

The direction of groundwater flow in the alluvial aquifer in the area downgradient of the two U-Pond areas also is in a northerly direction toward the Cimarron River; however, the hydraulic gradient is exceptionally flat and the rate of groundwater migration in this area of the alluvial aquifer is correspondingly slow.

The depth to groundwater in this area of the alluvial floodplain is approximately nine to ten feet below ground surface. The hydraulic gradient in the alluvial aquifer in this area is very, very low and, based on groundwater elevation measurements taken in September 2003, is calculated to range from approximately 0.0003 foot per foot to 0.0008 foot per foot (vertical foot per horizontal foot). See Table 3, Attachment C.

The results of drilling and installation of groundwater monitor wells in this area have shown that the subsurface alluvial deposits are primarily sand. Assuming a characteristic hydraulic conductivity of approximately 10 to 100 meters per day for the alluvial sand deposits with a hydraulic gradient of 0.0008, the rate of groundwater flow in this area is estimated to be less than 10 meters per year.

6.0 ANALYTICAL DATA PRESENTATION – U-POND #1

Analytical data from both newly installed bedrock wells and alluvial well and data from previously installed wells in this area are discussed in this Section. The well locations are shown on the drawing included in Attachment B. Data discussed includes gross alpha, gross beta, and Tc-99. Cimarron has been analyzing for gross beta constituents as an integral part of its environmental monitoring program since the inception of site operations. Specific analyses for Tc-99 were not started until 1996 when it was added to the environmental monitoring program. A summary of the bedrock wells discussed in this section is included in Table 4.

Table 4 Well Construction Information				
Well No.	Formation	Date Installed	Location	Site Monitoring Program
1311	Sandstone A	1985	Upgradient	Yes
1312	Sandstone A	1985	Downgradient	Yes
1313	Sandstone A	1985	Downgradient	Yes
1340	Sandstone A	1997	Downgradient	No
1341	Sandstone B	1997	Downgradient	No
1345	Sandstone B	2003	Downgradient	No

Data from four shallow bedrock (Sandstone A) wells and two deeper bedrock (Sandstone B) wells are reviewed for monitoring groundwater upgradient and downgradient from the former U-Pond #1 area. The four shallow Sandstone A wells are 1311, 1312, 1313, and 1340; well 1341 and new well 1345 are Sandstone B wells. Wells 1311 is upgradient to former U-Pond #1. All other wells are downgradient wells. Monitor wells 1311, 1312, and 1313 were installed in 1985. These wells are part of the site environmental monitoring program; consequently, there is a significant amount of groundwater data from these wells. Monitor wells 1340 and 1341 were installed in 1997 for a site hydrogeological investigation. Well 1345 was installed in April 2003 for this Tc-99 investigation.

Also, as part of the Tc-99 assessment, analytical data from the five alluvial wells (i.e., T-51, T-52, T-53, T-57, and T-58) installed north of the former U-Pond #1 area in April 2003 are presented in this Section. Finally, data from the four wells (i.e., T-62, T-63, T-64, and T-65) installed in July 2003 are discussed. Analytical data tables for all wells within the U-Pond #1 area sampled in accordance with the Work Plan are included in Attachment E.

6.1 Analytical Data (Sandstone A)

In 1996, during the site-wide investigation to further evaluate disproportionate gross beta to gross alpha ratios in groundwater, numerous wells on site were sampled. Bedrock wells sampled included both upgradient and downgradient wells as shown in Table 4.

Upgradient well 1311 was analyzed in 1996 for Tc-99. The Tc-99 concentration was measured at 18 ± 4.8 pCi/L which is at the lower limit of detection for the off-site laboratory. Sampling in June and September 2003 for this assessment showed Tc-99 results at 23.2 pCi/L and 21.2 pCi/L; also, at or below the detection limit for the laboratory.

In 1996 and succeeding quarters, Tc-99 has been monitored in downgradient wells 1312 and 1313 and has been detected at elevated concentrations. Tc-99 concentrations in well

1312 have generally decreased from a high of 3,680 pCi/L in 1997 to 2,850 pCi/L for the September 2003 analysis. Well 1313 had a Tc-99 concentration in 1997 of 1,560 pCi/L and the most recent analyses in June and September 2003 showed concentrations at 157 pCi/L and 411 pCi/L respectively. As discussed, Cimarron has monitored for gross beta since these wells were installed. Plots of gross beta and Tc-99 versus the duration of the sampling period for wells 1312 and 1313 are included in Attachment F. These four figures (i.e., Figures 2.0 through 5.0) show an overall general decrease in concentrations for both gross beta and Tc-99 for wells 1312 and 1313. For 2003, the analytical data for Tc-99 would indicate an increase in concentrations for both wells. However, these short-term trends are not indicative of the overall downward trend noted from the complete data set. Concentrations have fluctuated with historic groundwater elevations with the overall trend still being downward.

Groundwater samples from well 1340 have been analyzed for Tc-99 infrequently and cannot be trended. However, the recorded gross beta has shown a downward trend. The February 1997 gross beta was 430 pCi/L and the September 2003 result was 57.6 pCi/L. The June and September 2003 Tc-99 analyses showed Tc-99 at 83 pCi/L and 122 pCi/L respectively. The analytical data for all wells discussed in this section are presented in Attachment F with the 2003 Tc-99 data summarized below in Table 5. All locations sampled show Tc-99 concentrations substantially below the 3,790 pCi/L limit[4] for license termination.

TABLE 5 – SANDSTONE A
Tc-99 CONCENTRATIONS (pCi/L) for 2003

LOCATION	FEBRUARY	JUNE	SEPTEMBER
1311	5.3	23.2	21.2
1312	1,260	2,060	2,850
1313	169	157	411
1340	-	83.8	122

6.2 Analytical Data (Sandstone B)

Well 1341 was installed adjacent to well 1340 east and downgradient of former U-Pond #1 into Sandstone B as a monitored location for the 1997 hydrogeologic investigation. Analytical results for Tc-99 from the latest sampling event, September 2003, shows 263 pCi/L with the gross beta reported at 120 pCi/L. This well was first sampled in 1997 for gross alpha, beta, and total uranium. The gross beta results have shown a general downward trend from the June 1997 sampling event when the gross beta was recorded at 620 pCi/L.

Well 1345 has been sampled three times for off-site Tc-99 analysis. The original analysis in April 2003, after well installation, showed Tc-99 at a concentration of 54.3 pCi/L. The June 2003 result was at a non-detection concentration, and the most recent September 2003 result was 0.5 pCi/L for Tc-99, both results were below the laboratory detection limit for Tc-99. The analytical data for all wells discussed in this section are presented in

Attachment E, and a summary of the 2003 Tc-99 analytical results are included in Table 6.

TABLE 6 – SANDSTONE B Tc-99 CONCENTRATIONS (pCi/L) for 23003			
LOCATION	APRIL	JUNE	SEPTEMBER
1341	-	323	263
1345	54.3	ND*	0.5

*Non detect

6.3 Analytical Data (Alluvial Wells)

The 1996 investigation, which included water samples collected from temporary well points north of both former U-Pond areas, along the base of the bluff area face and below the bluff in the shallow alluvium, indicated Tc-99 was present at elevated concentrations. These well points were sampled a second time in 2001. The highest recorded concentration was 1,700 pCi/L for a sample collected in 2001 prior to the well points being closed. The most recent well installations in the alluvium were to confirm the results from the previous investigation and to better characterize this groundwater.

The April sampling event for the five new wells within the U-Pond #1 area showed Tc-99 ranging from 16 pCi/L for well T-51 to 627 pCi/L for well T-57. Well T-57 is adjacent to the bluff and well T-51 is midway between the bluff and the Cimarron River. For the September sampling, the two wells adjacent to the cliff, T-57 and T-58, showed concentrations of Tc-99 of 706 pCi/L and 69.9 pCi/L respectively. The three wells further north, midway between the bluff and the Cimarron River, wells T-51, T-52, and T-53, show Tc-99 concentrations of 8.8 pCi/L, 32.1 pCi/L and 20.9 pCi/L respectively which are similar to the June sampling event. Analytical data for Tc-99 from the April, June, and September 2003 sampling events for the five new wells installed are shown in Table 7.

TABLE 7 – ALLUVIUM Tc-99 CONCENTRATIONS (pCi/L) for 2003				
LOCATION	APRIL	JUNE	JULY	SEPTEMBER
T-51	16	10.6	-	8.8
T-52	30	ND*	-	32.1
T-53	28.9	17.5	-	20.9
T-57	627	671	-	706
T-58	115	124	-	69.9
T-62	-	-	464	510
T-63	-	-	715	1,160
T-64	-	-	-	26.7
T-65	-	-	-	267

*Non-detect

The four new wells installed in July at the base of the cliff just to the west of T-58 showed concentrations of Tc-99 ranging from 26.7 pCi/L to 1,160 pCi/L for the September 2003 sampling events. These wells are T-62, T-63, T-64, and T-65. Well T-63 shows the highest result. The Tc-99 analytical data for these four wells are also summarized in Table 7.

6.4 U-Pond #1 Area Summary

Shallow groundwater within Sandstone A and Sandstone B downgradient from the former U-Pond #1 has been impacted by prior site operations and shows elevated but decreasing concentrations of Tc-99. The highest concentration of Tc-99 within this sandstone area is at well 1312 with a concentration of 2,850 pCi/L. In June 1989, prior to Tc-99 analysis, well 1312 showed a gross beta of 8,000 pCi/L; the September 2003 gross beta was 1,810 pCi/L. Well 1341, located in Sandstone B, shows a slight impact from prior site operations and also shows a general downward trend in Tc-99 concentrations. All analytical data showed concentrations of Tc-99 below the groundwater concentration limit of 3,790 pCi/L for license termination with well 1312 being the highest concentration at 75% of the limit. Concentrations of Tc-99 have peaked in Sandstone A and Sandstone B downgradient from the former U-pond as the shallow groundwater flows laterally north and discharges at the sandstone outcrops along the bluff and into the alluvium.

The shallow alluvium north of the bluff shows elevated concentrations of Tc-99 with the highest concentration recorded at well T-63 with a concentration of 1,160 pCi/L. As discussed in the September 2002 Technituim-99 Site Impact Evaluation[2], groundwater in Sandstone A downgradient from the former U-Pond, flows laterally and discharges to the incised drainage pathways and seeps found in the low-lying bluffs and cliffs that border the floodplain. These discharge zones are the source for the Tc-99 found in the alluvium groundwater. All locations sampled show concentrations substantially below the Tc-99 limit of 3,790 pCi/L for license termination with well T-63 being the highest concentration at 30% of this limit. Since the original source (i.e., U-Pond #1) is removed, the concentrations of Tc-99 in groundwater and at the discharge zones will continue to decrease as will the concentration of Tc-99 in the alluvium.

7.0 ANALYTICAL DATA PRESENTATION – U-POND #2

Analytical data from both the newly installed bedrock and alluvial wells and data from previously installed wells in this area are discussed in this section. Data from both Sandstone A and Sandstone B bedrock wells and two seeps are included. The bedrock and alluvium locations sampled are shown on the drawing included in Attachment B; a bedrock well summary is listed in Table 8.

Table 8 Well Construction Information				
Well/Seep No.	**Date Installed**	**Formation**	**Location**	**Site Monitoring Program**
1208	-	Sandstone A	Downgradient	Yes
1320	1989	Sandstone A	Downgradient	Yes
1325	1989	Sandstone A	Upgradient	Yes
1336/1336A	1989/1994	Sandstone A	Downgradient	Yes
1337	1997	Sandstone A	Downgradient	No
1338	1997	Sandstone B	Downgradient	No
1346	2003	Sandstone B	Downgradient	No
1347	2003	Sandstone A	Downgradient	No

Well 1325 is an environmental well installed in Sandstone A in 1989 and is located upgradient to the U-Pond area. Wells designated 1320, 1336, 1337 and 1338 were installed to monitor groundwater under and downgradient from the former U-Pond area. Wells 1320 and 1336 are environmental monitoring wells installed in Sandstone A in 1989. Wells 1337 and 1338 were installed as two monitored locations for the 1997 hydrogeologic investigation to monitor Sandstone A and Sandstone B, respectively. Wells 1346 and 1347 were installed in April 2003 for this Tc-99 assessment. Well 1346 is a Sandstone B well and well 1347 a Sandstone A well. Groundwater seep 1208, located north of the U-Pond area at the face of the cliff, is included as a monitored location in this area for Sandstone A. Wells 1320, 1336, and 1325 and seep 1208 are monitored locations that are part of the site environmental monitoring program; consequently, there is a significant amount of analytical data for these locations.

Also, as part of this Tc-99 assessment, six alluvial wells (i.e., T-54, T-55, T-56, T-59 T-60 and T-61) were installed north of the former U-Pond area. These wells were installed at the base of the cliff and midway between the cliff and the Cimarron River. Well 1343, installed adjacent to the River in 1997, also was sampled for this assessment. Analytical data tables for wells and seeps sampled in accordance with the Work Plan are included in Attachment G.

7.1 Analytical Data (Sandstone A)

Since 1996, Tc-99 has been specifically monitored at several locations within this U-Pond #2 area including well 1336A and seep 1208. Tc-99 concentrations in well 1336A (well 1336A replaced well 1336 in June 1994) have decreased from a high of 2,590 pCi/L in 1997 to 947 pCi/L for the September 2003 analysis. The gross beta concentrations from earlier well 1336 sampling events (i.e., 11,000 pCi/g gross beta in 1989) would indicate that the Tc-99 plume has peaked at this location and subsequently is dissipating as the groundwater flows north toward the bluff. Trend analyses for well 1336 including

both gross beta and Tc-99 are included in Attachment H, Figures 6.0 and 7.0, and show the downward trending concentrations.

Seep 1208 had a recorded Tc-99 concentration in 1996 of 4,550 pCi/L and a gross beta of 3,190 pCi/L. The general trending for gross beta has been slowly downward. The June 2003 Tc-99 analysis indicates a possible error in the original reported analytical data. The Tc-99 concentration from General Engineering Laboratories (GEL) was recorded at 5,300 pCi/L. This June sample was split with the NRC, whose result from ORISE was 1,800 pCi/L for Tc-99. Ten other samples split with the NRC and analyzed for Tc-99 were all within 1% agreement. The discrepancies between the 1208 sample results for Tc-99 were investigated by both Cimarron and the NRC. GEL re-analyzed the sample and recorded 3,500 pCi/L for Tc-99. ORISE's performed Tc-99 analysis on both the original split sample sent to ORISE from GEL and their original sample with results of 3,510 pCi/L and 3,340 pCi/L respectively. Cimarron believes the 3,500 pCi/L analytical results to be representative of the June sampling event and has recorded this result in the data files.

The September 2003 seep 1208 analysis for Tc-99 was 4,020 pCi/L and the analytical result for gross beta was 1,710 pCi/L. Trend analyses for both gross beta and Tc-99 are included in Attachment H, Figures 8.0 and 9.0. Since 1989 the gross beta trending continues to be downward. The more recent Tc-99 trending data shows a gradual increase in concentrations for this sample location. However, despite the data fluctuations, Tc-99 concentrations in seep 1208 appear somewhat steady, averaging approximately 3,000 pCi/L Tc-99 since 1996. Also, since this is a seep sample that is collected from a small pool located just below the seep discharge, samples collected from this pool and analyzed for Tc-99 produce results that are not necessarily as accurate as samples collected from a properly constructed well. This pool can be subjected to impurities being deposited in the pool from the natural surroundings that can influence and interfere with subsequent Tc-99 analyses. The two upgradient wells, 1336A and 1347, show Tc-99 concentrations substantially below the license release limit of 3,790 pCi/L.

Groundwater samples from well 1337 have been analyzed for Tc-99 infrequently and cannot be trended. This well was first sampled in 1997 for gross alpha/beta and total uranium. The gross beta was reported at 343 pCi/L. In June 1999 this well was first sampled for Tc-99 and showed a concentration of 113 pCi/L. The September 2003 sampling event showed Tc-99 at 294 pCi/L with a gross beta of 95.1 pCi/L. In September 2003, wells 1320 and 1325 were analyzed for technetium and showed a concentration below the off-site laboratory detection limit (DL) for this constituent.

The new Sandstone A well, 1347, was first sampled in April 2003 with a reported concentration of Tc-99 at 720 pCi/L. The June analytical result was 96.1 pCi/L and 45.3 pCi/L for the September sampling event. This well is upgradient from seep 1208.

Seep 1206, although not considered a downgradient seep to this U-Pond area was sampled per the Work Plan. The September 2003 analytical results showed Tc-99 at 14.4

pCi/L, which is below the DL for the laboratory. Also, this location was sampled for analyses three times in 1997 and twice in 2002. The analytical results for Tc-99 ranged from 12.2 pCi/L to 54.4 pCi/L during this period. The 2003 Tc-99 analytical results for Sandstone A wells are summarized in Table 9.

TABLE 9 – SANDSTONE A Tc-99 CONCENTRATIONS (pCi/L) for 2003			
LOCATION	FEBRUARY	JUNE	SEPTEMBER
1320	6.9	4.8	6.9
1325	-	-	7.7
1336A	1,020	952	947
1337	207	234	294
1347	720	96.1	45.3
1206	-	-	14.4
1208	4,280	3,500*	4,020

*Re-analysis by GEL

7.2 Analytical Data (Sandstone B)

Sandstone B well 1338 was installed in 1997, northeast and downgradient of former U-Pond #2, for the purpose of verifying that a hydrologic barrier layer (Mudstone A) exists between Sandstones A and B under this area. This well was first analyzed for Tc-99 in June 1999 and showed a result of 32.7 pCi/L. Gross beta and Tc-99 analytical results from the September 2003 sampling event were 8.6 pCi/L and 8.8 pCi/L respectively.

The new well, 1346, showed a concentration of Tc-99 of 6 pCi/L for the June sampling event, and 84.2 pCi/L for September. These Sandstone B concentrations are either below the DL for the off-site laboratory reporting the results or a small fraction of the license release limit. A summary of the 2003 Tc-99 analytical results is shown in Table 10.

TABLE 10 – SANDSTONE B Tc-99 CONCENTRATIONS (pCi/L) for 2003			
LOCATION	APRIL	JUNE	SEPTEMBER
1338	23.1	ND*	8.8
1346	291	6	84.2

*Non-detect

7.3 Analytical Data (Alluvial Wells)

In 1996, Cimarron conducted an investigation north of U-Pond #2 along the bluff face and in the shallow groundwater at the base of the bluff using shallow temporary well points. The analytical results for several of the temporary PVC wells showed the presence of Tc-99 as reflected by the elevated gross beta results. Prior to the abandonment of these wells, the highest recorded concentration was 1,148 pCi/L for a sample collected in 2001.

The most recent properly constructed wells installed in the alluvium were intended to confirm and better characterize the shallow groundwater north of the bluff. The initial sampling in April, after well installation, showed Tc-99 concentrations ranging from 167 pCi/L to 1,590 pCi/L for wells T-54, T-55, and T-56, which are located near the bluff. The wells midway between the bluff and the River, showed Tc-99 concentrations at the detection limit for the off-site laboratory ranging from 15.9 to 23.7 pCi/L. These northern wells are numbered T-59, T-60 and T-61.

The June 2003 sampling event showed sample results ranging form 220 pCi/L to 1,480 pCi/L for wells T-54, T-55, and T-56 and results below the detection limit for wells T-59, T-60, and T-61. For the September 2003 sampling event, wells T-54, T-55, and T-56 showed concentrations of Tc-99 of 1,310 pCi/L, 286 pCi/L, and 237 pCi/L respectively. The three wells further north, wells T-59, T-60, and T-61, showed Tc-99 concentrations of 14.5 pCi/L, 14.3 pCi/L, and 20 pCi/L respectively. These northern well concentrations are all below the laboratory DL for this radionuclide. Well 1343 located north of T-61 adjacent to the Cimarron River showed a Tc-99 concentration of 0.8 pCi/L for the September 2003 sampling event; this reported result is also below the detection limit for the laboratory performing the analysis. The 2003 analytical data for Tc-99 are shown in Table 11.

TABLE 11 – ALLUVIUM
Tc-99 CONCENTRATIONS (pCi/L) for 2003

LOCATION	APRIL	JUNE	SEPTEMBER
T-54	1,320	1,480	1,310
T-55	1,590	767	286
T-56	167	220	237
T-59	16.6	ND*	14.5
T-60	23.7	11.7	14.3
T-61	15.9	2.7	20
1343		ND*	0.8

*Non-Detect

7.4 U-Pond #2 Area Data Summary

Shallow groundwater within Sandstone A and Sandstone B downgradient from the former U-Pond #2 has been impacted by prior site operations and shows elevated concentrations of Tc-99. Concentrations of Tc-99 have peaked within Sandstone A downgradient from the former U-Pond #2 area and at the outcrops along the bluff as demonstrated by the analytical data recorded for seep 1208. Seep 1208 shows the highest Tc-99 concentration for the September sampling event at 4,020 pCi/L. The concentration of Tc-99 at this location has fluctuated since 1996 with an overall average of 3,000 pCi/L. Groundwater samples collected from Sandstone B were recorded either at the detection limit for the laboratory or at a fraction of the license release criteria, indicating minor impact to this zone from prior site operations.

The shallow alluvium shows elevated concentrations of Tc-99 adjacent to the bluff. As discussed in Section 5.1, the source for the elevated concentrations of Tc-99 in the alluvium is the discharge from the low-lying bluffs and cliffs that border the floodplain. The highest concentration in the alluvium as reported from the September 2003 sampling event was for well T-54 which is located just north of seep 1208. The reported concentration was 1,310 pCi/L.

With the exception of seep 1208, all analytical data for this area showed concentrations of Tc-99 below the groundwater concentration limit of 3,790 pCi/L for license termination. Although the data showed the Tc-99 in seep 1208 is slightly above the limit, this is tempered by he gross beta concentrations which indicate a gradual general downward trend. The two upgradient wells to seep 1208 show concentrations of Tc-99 substantially below the license termination limit. With this U-Pond closed and vegetated, Tc-99 in groundwater and at the outcrops along the bluff will continue to decrease as it moves beyond the extent of the former impoundment within both the sandstones and alluvium and disperses.

8.0 CONCLUSION

In response to the NRC's March 12, 2002[1] letter, Cimarron developed a Technitium-99 Site Impact Evaluation and Proposed Work Plan[2] addressing the presence of Tc-99 in groundwater at the Cimarron facility. Based upon data presented in that Work Plan, Cimarron concluded that the presence of Tc-99 in groundwater had been characterized downgradient from U-Pond #1, U-Pond #2, Burial Area #1, and other areas on-site. This characterization demonstrated that elevated levels of Tc-99 are present downgradient from the two former waste management areas of U-Pond #1 and U-Pond #2 within the shallow sandstones and at the seep outcrops and are not generally present at concentrations above laboratory detection limits anywhere else on site.

Because of the elevated concentrations of Tc-99 in groundwater downgradient from the two U-Ponds, Cimarron proposed further groundwater characterization within the shallow sandstones and in the alluvium of the Cimarron River north of the bluff area. This proposed assessment has been completed and has not modified Cimarron's understanding of the disposition of the Tc-99 plumes nor the hydrologic setting of the site.

In general, shallow groundwater in the A Sandstone unit discharges to the incised drainage pathways and seeps found north of the former U-Pond areas. Also, the intersections of the alluvium with the deeper underlying B Sandstones creates discharge zones for the sandstones and further influences and controls lateral movement of the groundwater in the alluvium towards the Cimarron River. The hydraulic gradient within the alluvium is exceptionally flat.

Cimarron previously had concluded that the Tc-99 concentrations in groundwater adjacent to the former U-Ponds were trending downward and that peak concentrations

had reached the bluffs north of the two pond areas. The peak concentration was found at seep 1208. Cimarron determined that seep 1208 represented the highest Tc-99 concentration on site, and did not believe additional monitoring points were needed. Seep 1208 continues to produce sufficient water for sampling throughout the year, including the dry months of August through October. This seep has been monitored continuously under the site's revised 1989 environmental monitoring program. Also, as noted previously, seep 1208 samples are collected from a small pool that actually is located below the seep, which probably produce results that are not as representative as samples collected from a properly constructed well in Sandstone A. The two upgradient wells to seep 1208, wells 1336A and 1347, show concentrations of Tc-99 substantially below the license release limit of 3,790 pCi/L.

The fact that seep 1208 represented the highest concentration of Tc-99 located on-site was based upon the data presented in the initial September 2002 "Technetium-99 Site Impact Evaluation[2]." This study presented data from the 1996 seep sampling event which showed gross beta sample results from fourteen seep locations north of both U-Ponds. Seep 1208 had the highest Tc-99 concentration for groundwater discharging from Sandstone A seeps downgradient from the two U-Ponds. The gross beta was recorded at 3,190 pCi/L in December 1996.

The conclusion that seep 1208 represents the highest concentration of Tc-99 monitored on site has not changed with the additional data generated from the installation of eighteen new wells. The additional data did confirm the presence of Tc-99 at slightly elevated concentrations in the shallow alluvium groundwater immediately north of the bluff area. Whereas, the six wells located midway between the bluff and the Cimarron River showed concentrations of Tc-99 at or slightly above the DL for the laboratory performing the analyses. The bluff area includes shallow Sandstone A discharge points downgradient from both former U-Pond areas which have resulted in the Tc-99 concentrations in the alluvium. However, these concentrations are substantially below the concentrations monitored at seep 1208. Seep 1208 presently is the only sample location that has yielded a Tc-99 concentrations slightly above the license termination guideline value of 3,790 pCi/L[4]. Data from the June re-analysis showed Tc-99 at 3,500 pCi/L which is just below the limit. While the September Tc-99 result was slightly above the limit at 4,020 pCi/L, previous gross beta results in December 1996 at 3,190 pCi/L and September 2003, at 1,710 pCi/L, indicate that Tc-99 concentrations are decreasing also. Cimarron believes that sufficient data has been generated to fully characterize the Tc-99 in groundwater downgradient from the two U-Pond areas and neither remediation nor further characterization is required based upon this assessment. The only location where further monitoring is justified is seep 1208. Cimarron will submit a license amendment request in early 2004 that will request replacing the existing "environmental monitoring" program with a "post decommissioning monitoring" program. Wells presently located within the two U-Pond areas will be affected by this request.

9.0 REFERENCES

1. NRC letter from Mr. Ken Kalman, Environmental Scientist, Decommissioning Branch, Division of Waste Management, Office of Nuclear Material Safety and Safeguards, to Mr. Jeff Lux, Manager, Planning and Regulatory Compliance, Cimarron Corporation, dated March 12, 2002.

2. Kerr-McGee Corporation, "Technium-99 Site Impact Evaluation and Proposed Groundwater Assessment Work Plan for Cimarron Corporation's Former Nuclear Fuel Fabrication Facility, Crescent, Oklahoma, " September 2002.

3. USNRC letter from Mr. Ken Kalman, Environmental Scientist, Decommissioning Branch, Division of Waste Management, Office of Nuclear Material Safety and Safeguards, to Mr. Jeff Lux, Manager, Planning and Regulatory Compliance, Cimarron Corporation, dated November 13, 2002.

4. USNRC letter from Mr. Larry W. Camper, Chief Officer of Nuclear Material Safety and Safeguards, to Mr. Jess Larsen, Vice President, Cimarron Corporation, dated August 20, 1999.

Attachment A

SOIL BORING LOG KM—5655-A

KERR-McGEE CORPORATION Hydrology Dept. Engineering Services	KM SUBSIDIARY Cimarron	LOCATION	BORING NUMBER 1345

DEPTH IN FEET	LITHOLOGIC DESCRIPTION	GRAPHIC LOG	UNIFIED SOIL FIELD CLASS.	BLOWS PER FOOT	PID (ppm)	SOIL SAMPLE NO.	TYPE	DEPTH	REC.	REMARKS OR FIELD OBSERVATIONS
	Sand: fn., 10YR4/8 red, round, silty		SM							Air drill lithology described from blown cuttings -no sampling 10:15
10	Sand SS nodules, ind		SM							
20	Sand; fn, silty, rdd		SM							
30	Shale; Sandy ip w/ hd Sandy conglomerates, nods		ML							Hard drilling
	Shale: red, 10R4/8, few blu-grn layers, spots		ML							
40	Sand: conglomerates, 2.5YR4/6		SM							4/7/03 11:0 Softer drilling at 45' 4/8/03
	Shale: 10YR4/8		ML							making water
50	Sand: 7.5YR5/8, strong brn, fine grn, rdd		SM							
60	Shale: red, sandy?, wet mud 10R4/8 dk rd		ML							wet red mud
	TD 65'									
65										

EXPLANATION

- ▼ Water Table (24 Hour)
- ▽ Water Table (Time of Boring)
- PID Photoionization Detection (ppm)
- NO. Identifies Sample by Number
- TYPE Sample Collection Method

SPLIT-BARREL | AUGER | ROCK CORE | THIN-WALLED TUBE | CONTINUOUS SAMPLER | NO RECOVERY

DEPTH Depth Top and Bottom of Sample
REC. Actual Length of Recovered Sample in Feet

GRAPHIC LOG LEGEND

CLAY | DEBRIS FILL | SILT | HIGHLY ORGANIC (PEAT) | SAND | SANDY CLAY | GRAVEL | CLAYEY SAND | SILTY CLAY | ____ | CLAYEY SILT | ____

DATE DRILLED	PAGE
4/7/03	of

DRILLING METHOD: Air Rotary
DRILLED BY: AEI
LOGGED BY: J. Crawford
EXISTING GRADE ELEVATION (FT. AMSL): 989.1 TOC, pin 987.1
LOCATION OR GRID COORDINATES:

KERR-McGEE CORPORATION
HYDROLOGY DEPARTMENT
MONITORING WELL INSTALLATION DIAGRAM

Protective Pipe — Yes ☑ No ☐ — Steel ☑ PVC ☐

Surveying Pin ? Yes ☑ No ☐

Casing Cap Vent ? Yes ☑ No ☐

Lock ? Yes ☑ No ☐

Weep Hole ? Yes ☑ No ☐

Concrete Pad 3 Ft. x 3 Ft. x 4 Inches

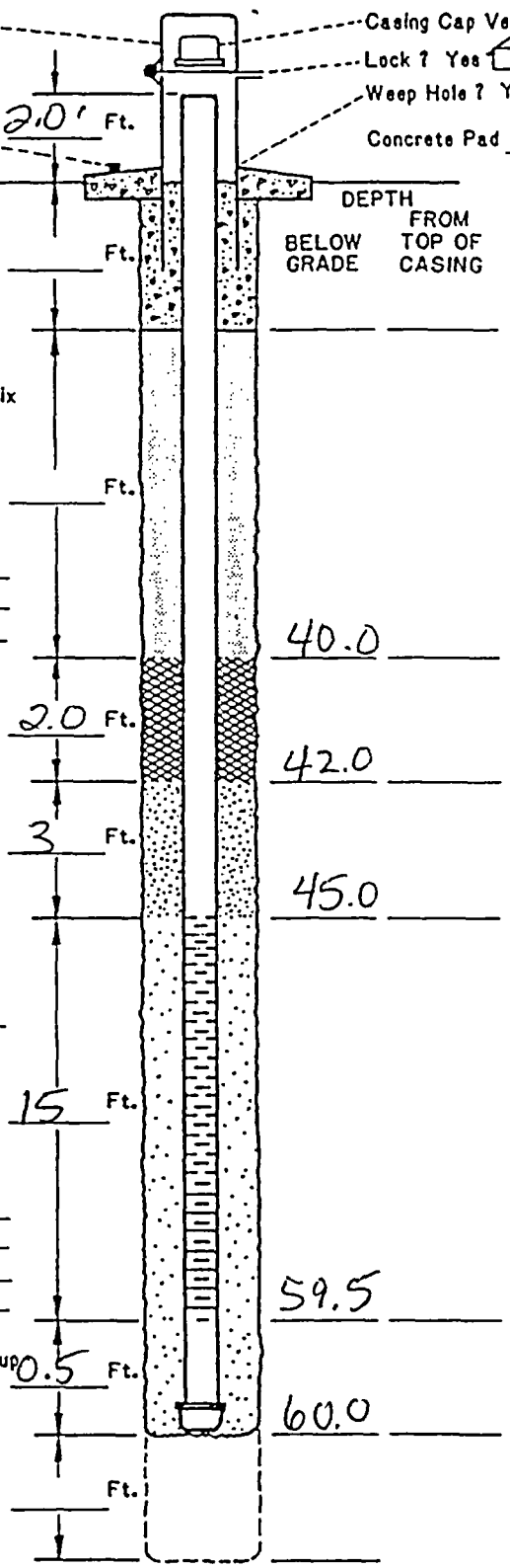

DRILLING INFORMATION:

1. Borehole Diameter= 6 3/4 Inches.
2. Were Drilling Additives Used ? Yes ☐ No ☐
   Revert ☐ Bentonite ☐ Water ☐
   Solid Auger ☐ Hollow Stem Auger ☐
3. Was Outer ~~Steel~~ PVC Casing Used ? Yes ☒ No ☐
   Depth= 0 to 40 Feet. 8"
4. Borehole Diameter for Outer Casing 10 3/4 Inches.

WELL CONSTRUCTION INFORMATION:

1. Type of Casing: PVC ☒ Galvanized ☐ Teflon ☐
   Stainless ☐ Other
2. Type of Casing Joints: Screw-Couple ☒ Glue-Couple ☐ Other
3. Type of Well Screen: PVC ☒ Galvanized ☐
   Stainless ☐ Teflon ☐ Other
4. Diameter of Casing and Well Screen:
   Casing 2 Inches, Screen 2 Inches.
5. Slot Size of Screen: 10
6. Type of Screen Perforation: Factory Slotted ☒
   Hacksaw ☐ Drilled ☐ Other
7. Installed Protector Pipe w/Lock: Yes ☒ No ☐

WELL DEVELOPMENT INFORMATION:

1. How was Well Developed ? Bailing ☐ Pumping ☐
   Air Surging (Air or Nitrogen) ☒ Other
2. Time Spent on Well Development ?
   1.5 Minutes/Hours @0.5gpm
3. Approximate Water Volume Removed ? 67.5 Gallons
4. Water Clarity Before Development ? Clear ☐
   Turbid ☒ Opaque ☐
5. Water Clarity After Development ? Clear ☒
   Turbid ☐ Opaque ☐
6. Did Water have Odor ? Yes ☐ No ☐
   If Yes, Describe
7. Did Water have any Color ? Yes ☐ No ☐
   If Yes , Describe

WATER LEVEL INFORMATION:

Water Level Summary (From Top of Casing)

During Drilling Ft. Date

Before Development Ft. Date

After Development Ft. Date

Driller/Firm AET Drill Rig Type Failing Date Installed 4/8/03

Drill Crew Graham/Foster Well No. 1345 Kerr-McGee Hydrologist J. Crawford

SOIL BORING LOG KM—5655-A

KERR-McGEE CORPORATION Hydrology Dept. Engineering Services	KM SUBSIDIARY Cimarron	LOCATION	BORING NUMBER 1346

DEPTH IN FEET	LITHOLOGIC DESCRIPTION	GRAPHIC LOG	UNIFIED SOIL FIELD CLASS.	BLOWS PER FOOT	PID (ppm)	SOIL SAMPLE NO.	TYPE	DEPTH	REC.	REMARKS OR FIELD OBSERVATIONS
12:30	7.5YR 4/6 rd SS fg rd		SM							12:30
10	SS vf-fg slty Red orb sm sh lams		SM							
20	SS fg rd 2.5YR 5/8 rd slty 4/2 gry sm clr		SM							
30	SS orb SS sm conglom.									
40	Sh 2.5R 3/6 dk rd sdy sm sp		ML	TD 40		For		8" PVC		35-40 may be conglom SS w/ shale fg to md sz Sand w/ sm sh & R clay
12:00	Shale 40-43 Sand fn									
50	Sand 2.5YR 5/8 vfn sand		SM							
	Shale 5 8-6									
60	TD 60'		ML							
	Surface casing 0-40 drill to 60 Screen 60-45									

EXPLANATION

- Water Table (24 Hour)
- Water Table (Time of Boring)
- PID Photoionization Detection (ppm)
- NO. Identifies Sample by Number
- TYPE Sample Collection Method

SPLIT-BARREL · AUGER · ROCK CORE · THIN-WALLED TUBE · CONTINUOUS SAMPLER · NO RECOVERY

DEPTH Depth Top and Bottom of Sample
REC. Actual Length of Recovered Sample in Feet

GRAPHIC LOG LEGEND

CLAY · SILT · SAND · GRAVEL · SILTY CLAY · CLAYEY SILT · DEBRIS FILL · HIGHLY ORGANIC (PEAT) · SANDY CLAY · CLAYEY SAND

DATE DRILLED	PAGE
4-8-03	of

DRILLING METHOD: Air Rotary
DRILLED BY: ABI
LOGGED BY: J. Crawford
EXISTING GRADE ELEVATION (FT. AMSL): TOC 991.9 989.6 pin
LOCATION OR GRID COORDINATES:

KERR-McGEE CORPORATION
HYDROLOGY DEPARTMENT
MONITORING WELL INSTALLATION DIAGRAM

Protective Pipe
Yes ☒ No ☐
Steel ☒ PVC ☐
Surveying Pin ?
Yes ☒ No ☐

Casing Cap Vent ? Yes ☒ No ☐
Lock ? Yes ☒ No ☐
Weep Hole ? Yes ☒ No ☐
Concrete Pad 3 Ft. x 3 Ft. x 4 Inches

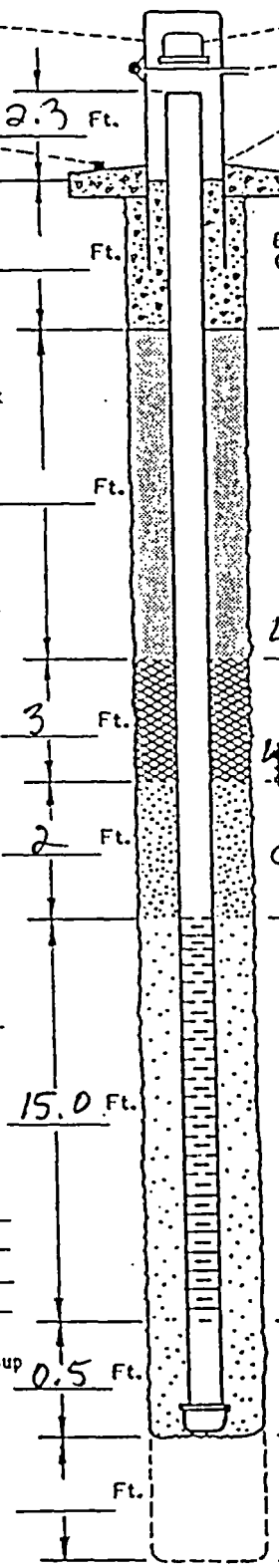

		DEPTH BELOW GRADE	DEPTH FROM TOP OF CASING
	2.3 Ft.		
Concrete	Ft.		
Cement/Bentonite Grout Mix Yes ☐ No ☐ 5.5 Gallons Water to 94Lb. Bag Cement & 3-5 Lb. Bentonite Powder Other:	Ft.		
		40	
Bentonite Seal Pellets ☒ Slurry ☐	3 Ft.		
		43	
Filter Pack Above Screen	2 Ft.	centralizer at 44-43	
		45	
FILTER PACK MATERIAL Silica Sand ☐ Washed Sand ☐ Pea Gravel ☐ Other: Sand Size 10-20	15.0 Ft.		
		59.5	
Dense Phase Sampling Cup Bottom Plug Yes ☐ No ☐	0.5 Ft.	centralizer at 59.5-60.5	
		60	
Overdrilled Material Backfill Grout ☐ Sand ☒ Caved Material ☐ Other:	Ft.		

DRILLING INFORMATION:

1. Borehole Diameter= 6 3/4 Inches.
2. Were Drilling Additives Used ? Yes ☐ No ☒
   Revert ☐ Bentonite ☐ Water ☐
   Solid Auger ☐ Hollow Stem Auger ☐
3. Was Outer Steel Casing Used ? Yes ☒ No ☐
   Depth= 0 to 40 Feet. 8" PVC
4. Borehole Diameter for Outer Casing 10 3/4 Inches.

WELL CONSTRUCTION INFORMATION:

1. Type of Casing: PVC ☒ Galvanized ☐ Teflon ☐
   Stainless ☐ Other
2. Type of Casing Joints: Screw-Couple ☒ Glue-Couple ☐ Other
3. Type of Well Screen: PVC ☒ Galvanized ☐
   Stainless ☐ Teflon ☐ Other
4. Diameter of Casing and Well Screen:
   Casing 2" Inches, Screen 2" Inches.
5. Slot Size of Screen: 0.01
6. Type of Screen Perforation: Factory Slotted ☒
   Hacksaw ☐ Drilled ☐ Other
7. Installed Protector Pipe w/Lock: Yes ☒ No ☐

WELL DEVELOPMENT INFORMATION:

1. How was Well Developed ? Bailing ☐ Pumping ☐
   Air Surging (Air or Nitrogen) ☒ Other hand bailed
2. Time Spent on Well Development ?
   F Minutes/Hours
3. Approximate Water Volume Removed ? 10 Gallons
4. Water Clarity Before Development ? Clear ☐
   Turbid ☒ Opaque ☐
5. Water Clarity After Development ? Clear ☐
   Turbid ☒ Opaque ☐
6. Did Water have Odor ? Yes ☐ No ☐
   If Yes, Describe
7. Did Water have any Color ? Yes ☐ No ☐
   If Yes, Describe

WATER LEVEL INFORMATION:

Water Level Summary (From Top of Casing)

During Drilling Ft. Date
Before Development 53.15 Ft. Date 4/9/03
After Development Ft. Date

Driller/Firm AEI
Drill Rig Type Failing
Date Installed 4/9/03
Drill Crew B. Graham
Well No. 1346
Kerr-McGee Hydrologist J. Poor

SOIL BORING LOG KM—5655-A

KERR-McGEE CORPORATION Hydrology Dept. Engineering Services	KM SUBSIDIARY Cimarron	LOCATION	BORING NUMBER 1347

DEPTH IN FEET	LITHOLOGIC DESCRIPTION	GRAPHIC LOG	UNIFIED SOIL FIELD CLASS.	BLOWS PER FOOT	PID (ppm)	SOIL SAMPLE NO.	TYPE	DEPTH	REC.	REMARKS OR FIELD OBSERVATIONS
	Silt: 7.5YR5/4 fine, dry		ML							1023
	Shale/silt: 5YR 4/6 slightly clayey		ML					10		
10	Shale: 10-12									
	Sand: 12-12.5 fn 2.5YR5/8		SP							
	Shale: 12-16.5 2.5YR5/6									
	Sand: 16.5-20 2.5YR5/8 fn		SP					20		
20	Sand: 20'-26 2.5YR ~~5/8~~ 4/6 fn silty.									
	Shale: 26-30, fn snd, clayey		ML					30		
30	Shale: 30-32									
	Sand: 32-33 2.5YR 4/6									
	Shale: 33-35									
	Sand: 35-40', fn. 2.5YR 4/6		SP					40		
40										1110
	TD 40'									

EXPLANATION

- Water Table (24 Hour)
- Water Table (Time of Boring)
- PID Photoionization Detection (ppm)
- NO. Identifies Sample by Number
- TYPE Sample Collection Method

SPLIT-BARREL | AUGER | ROCK CORE | THIN-WALLED TUBE | CONTINUOUS SAMPLER | NO RECOVERY

DEPTH Depth Top and Bottom of Sample
REC. Actual Length of Recovered Sample in Feet

GRAPHIC LOG LEGEND

CLAY | DEBRIS FILL | SILT | HIGHLY ORGANIC (PEAT) | SAND | SANDY CLAY | GRAVEL | CLAYEY SAND | SILTY CLAY | CLAYEY SILT

DATE DRILLED	PAGE
4/9/03	1 of 1

DRILLING METHOD: Air Rotary

DRILLED BY: AEI

LOGGED BY: J. Poor

EXISTING GRADE ELEVATION (FT AMSL): TOC 994.7 — 996.8 pm

LOCATION OR GRID COORDINATES:

KERR-McGEE CORPORATION
HYDROLOGY DEPARTMENT
MONITORING WELL INSTALLATION DIAGRAM

Protective Pipe
Yes ☐ No ☐
Steel ☐ PVC ☐
Surveying Pin ?
Yes ☐ No ☐

Casing Cap Vent ? Yes ☐ No ☐
Lock ? Yes ☐ No ☐
Weep Hole ? Yes ☐ No ☐
Concrete Pad _____ Ft. x _____ Ft. x _____ Inches

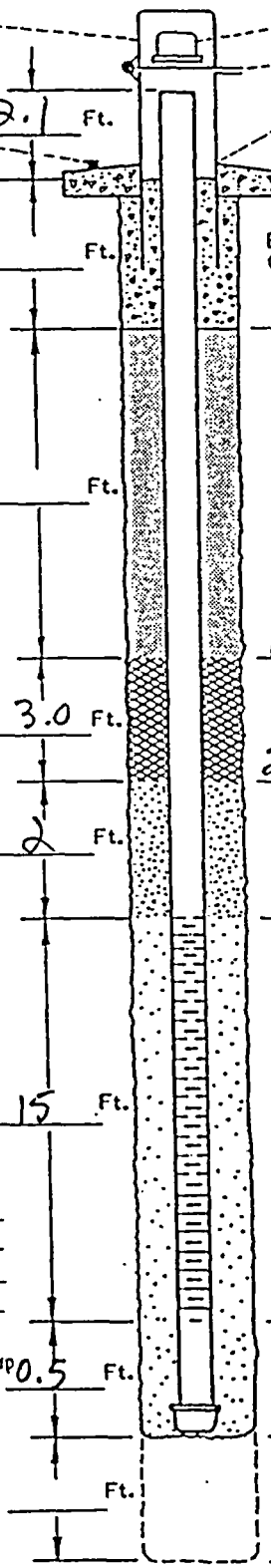

		DEPTH BELOW GRADE	DEPTH FROM TOP OF CASING
	2.1 Ft.		
Concrete	Ft.		
Cement/Bentonite Grout Mix Yes ☒ No ☐ 5.5 Gallons Water to 94Lb. Bag Cement & 3-5 Lb. Bentonite Powder	Ft.		
		19.5	
Bentonite Seal Pellets ☒ Slurry ☐	3.0 Ft.		
		22.5	
Filter Pack Above Screen	2 Ft.		
		24.5	
FILTER PACK MATERIAL Silica Sand ☒ Washed Sand ☐ Pea Gravel ☐	15 Ft.		
Sand Size 10-20		39.5	
Dense Phase Sampling Cup Bottom Plug Yes ☐ No ☐	0.5 Ft.		
		40.0	
Overdrilled Material Backfill Grout ☐ Sand ☐ Caved Material ☐	Ft.		

Other: _____

DRILLING INFORMATION:

1. Borehole Diameter= 6 3/4 Inches.
2. Were Drilling Additives Used ? Yes ☐ No ☒
   Revert ☐ Bentonite ☐ Water ☐
   Solid Auger ☐ Hollow Stem Auger ☐
3. Was Outer Steel Casing Used ? Yes ☐ No ☒
   Depth= _____ to _____ Feet.
4. Borehole Diameter for Outer Casing _____ Inches.

WELL CONSTRUCTION INFORMATION:

1. Type of Casing: PVC ☒ Galvanized ☐ Teflon ☐
   Stainless ☐ Other _____
2. Type of Casing Joints: Screw-Couple ☒ Glue-Couple ☐ Other _____
3. Type of Well Screen: PVC ☒ Galvanized ☐
   Stainless ☐ Teflon ☐ Other _____
4. Diameter of Casing and Well Screen:
   Casing 2" Inches, Screen 2" Inches.
5. Slot Size of Screen: 0.01
6. Type of Screen Perforation: Factory Slotted ☒
   Hacksaw ☐ Drilled ☐ Other _____
7. Installed Protector Pipe w/Lock: Yes ☐ No ☐

WELL DEVELOPMENT INFORMATION:

1. How was Well Developed ? Bailing ☐ Pumping ☐
   Air Surging (Air or Nitrogen) ☐ Other _____
2. Time Spent on Well Development ?
   _____ 2 Minutes/Hours 1.5 hr
3. Approximate Water Volume Removed ? 60 Gallons
4. Water Clarity Before Development ? Clear ☐
   Turbid ☒ Opaque ☐
5. Water Clarity After Development ? Clear ☒
   Turbid ☐ Opaque ☐
6. Did Water have Odor ? Yes ☐ No ☒
   If Yes, Describe _____
7. Did Water have any Color ? Yes ☐ No ☒
   If Yes, Describe _____

WATER LEVEL INFORMATION:

Water Level Summary (From Top of Casing)

During Drilling _____ Ft. Date _____
Before Development 31.58 Ft. Date 4/9
After Development _____ Ft. Date _____

Driller/Firm AEI
Drill Rig Type Failing
Date Installed 4/9/03
Drill Crew AEI B. Graham
Well No. 1347
Kerr-McGee Hydrologist J. Poor

SOIL BORING LOG KM—5655-A

KERR-McGEE CORPORATION Hydrology Dept. Engineering Services	KM SUBSIDIARY Cimarron	LOCATION 900N, 150E	BORING NUMBER T51

DEPTH IN FEET	LITHOLOGIC DESCRIPTION	GRAPHIC LOG	UNIFIED SOIL FIELD CLASS.	BLOWS PER FOOT	PID (ppm)	SOIL SAMPLE NO.	TYPE	DEPTH	REC.	REMARKS OR FIELD OBSERVATIONS
	Silt: w/ vfn sand, 5YR 4/4		MH							
	clay:		CH							
	Silt:		MH							
	Sand: fn-vfn 5YR 6/6					1		5.0	5.0	
5	Sand: med, 5YR 7/4, crs 5%		SW							water @ 6.0' ▽
	Clay:		CL							
	Sand: med									
	Sand: fine		SW							
	Sand: med-crs					2		10.0	2.5	
10	Sand: vcrs, wrdd, p.grd 7.5YR 6/4									
						3		15.0	1.8	
15	Sand: vcrs, w.rdd, p.grd 7.5YR 5/4		SW							
	Sand: vcrs, wrdd, p.grd, 5% chert		SW							
	Bedrock 19.0, gravel & clay		GC			4		20.	2.5	
20										
	TD 20.0'									

EXPLANATION

- ▼ Water Table (24 Hour)
- ▽ Water Table (Time of Boring)
- PID Photoionization Detection (ppm)
- NO. Identifies Sample by Number
- TYPE Sample Collection Method

SPLIT-BARREL · AUGER · ROCK CORE · THIN-WALLED TUBE · CONTINUOUS SAMPLER · NO RECOVERY

DEPTH Depth Top and Bottom of Sample
REC. Actual Length of Recovered Sample in Feet

GRAPHIC LOG LEGEND

CLAY · SILT · SAND · GRAVEL · SILTY CLAY · CLAYEY SILT · DEBRIS FILL · HIGHLY ORGANIC (PEAT) · SANDY CLAY · CLAYEY SAND

DATE DRILLED	4/1/03
PAGE	1 of 1
DRILLING METHOD	Auger.
DRILLED BY	AEI
LOGGED BY	J. POOR
EXISTING GRADE ELEVATION (FT AMSL)	938.0 PIN 940.5 TOC
LOCATION OR GRID COORDINATES	900N-150E

KERR-McGEE CORPORATION
HYDROLOGY DEPARTMENT
MONITORING WELL INSTALLATION DIAGRAM

Protective Pipe
Yes ☐ No ☐
Steel ☐ PVC ☐
Surveying Pin ? Yes ☐ No ☐

Casing Cap Vent ? Yes ☐ No ☐
Lock ? Yes ☐ No ☐
Weep Hole ? Yes ☐ No ☐

Concrete Pad 3 Ft. x 3 Ft. x 4 Inches

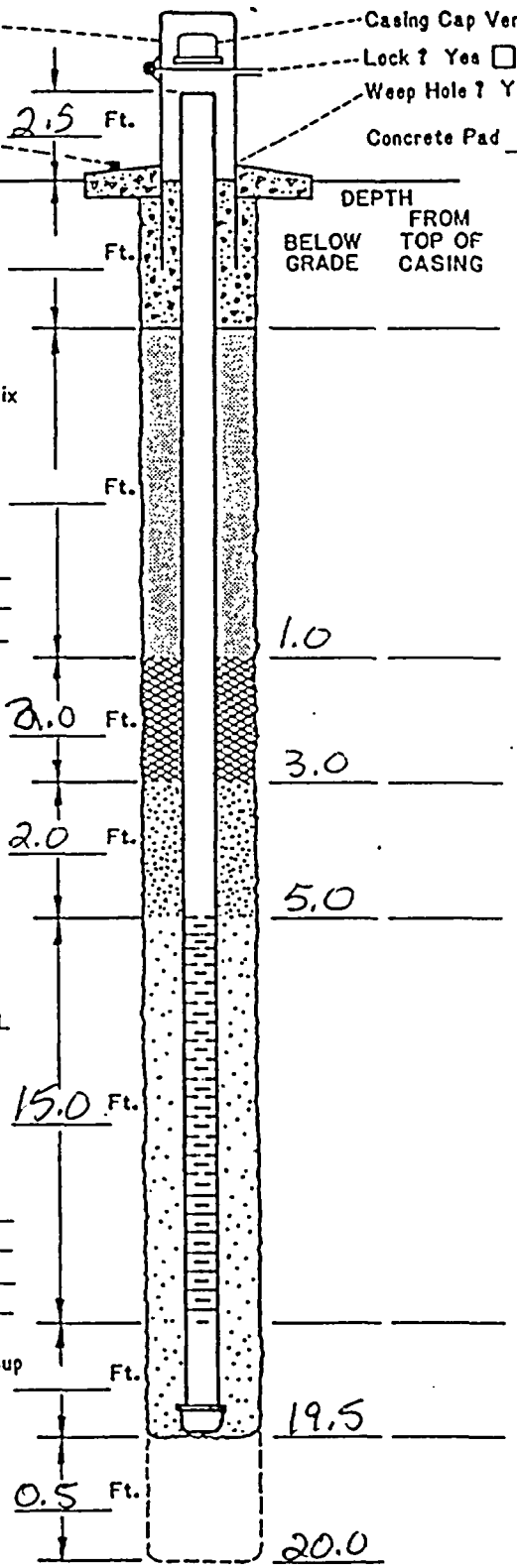

DRILLING INFORMATION:

1. Borehole Diameter= 8 3/4 Inches.
2. Were Drilling Additives Used ? Yes ☐ No ☒
   Revert ☐ Bentonite ☐ Water ☐
   Solid Auger ☐ Hollow Stem Auger ☐
3. Was Outer Steel Casing Used ? Yes ☐ No ☒
   Depth= _____ to _____ Feet.
4. Borehole Diameter for Outer Casing _____ Inches.

WELL CONSTRUCTION INFORMATION:

1. Type of Casing: PVC ☒ Galvanized ☐ Teflon ☐
   Stainless ☐ Other _____
2. Type of Casing Joints: Screw-Couple ☒ Glue-Couple ☐ Other _____
3. Type of Well Screen: PVC ☒ Galvanized ☐
   Stainless ☐ Teflon ☐ Other _____
4. Diameter of Casing and Well Screen:
   Casing 2" Inches, Screen 2" Inches.
5. Slot Size of Screen: 10
6. Type of Screen Perforation: Factory Slotted ☒
   Hacksaw ☐ Drilled ☐ Other _____
7. Installed Protector Pipe w/Lock: Yes ☐ No ☐

WELL DEVELOPMENT INFORMATION:

1. How was Well Developed ? Bailing ☐ Pumping ☐
   Air Surging (Air or Nitrogen) ☒ Other _____
2. Time Spent on Well Development ?
   2.5hr / _____ Minutes/Hours @4gpm
3. Approximate Water Volume Removed ? 600 Gallons
4. Water Clarity Before Development ? Clear ☒
   Turbid ☒ Opaque ☐ silty
5. Water Clarity After Development ? Clear ☒
   Turbid ☐ Opaque ☐
6. Did Water have Odor ? Yes ☐ No ☒
   If Yes, Describe _____
7. Did Water have any Color ? Yes ☐ No ☒
   If Yes, Describe _____

WATER LEVEL INFORMATION:

Water Level Summary (From Top of Casing)

During Drilling 6.0 gl Ft. Date 4/1/03
Before Development 7.33 gl Ft. Date 4/3/03
After Development _____ Ft. Date _____

Driller/Firm AEI Drill Rig Type Failing F-10 Date Installed 4/1/03
Drill Crew Graham, Foster Well No. T51 Kerr-McGee Hydrologist J. Poor

900 N, 150 E

SOIL BORING LOG KM-5655-A

KERR-McGEE CORPORATION Hydrology Dept. Engineering Services	KM SUBSIDIARY CIMARRON	LOCATION 900N - 260E	BORING NUMBER T-52

DEPTH IN FEET	LITHOLOGIC DESCRIPTION	GRAPHIC LOG	UNIFIED SOIL FIELD CLASS.	BLOWS PER FOOT	PID (ppm)	SOIL SAMPLE NO.	TYPE	DEPTH	REC.	REMARKS OR FIELD OBSERVATIONS
	Siltyclay, yellow-red, soft moist, 5YR 4/6									
	Sand: sat, 7.5YR 6/8 red/yell loose, med. fn		SW					5	3.9	
5	Sand: med-crs fn, wet w grd, 5b rdd, bcmg crs w/ depth sm v crs		SW					10	2	few traces of clay clasts
10									1.5	INNER Barrel sand locked
15	SAND ABO		SW					15		Fill Augers to run in w/ plug on bottom. Log cuttings from auger flights
20										
25	Sand: v crs to med crs gr sm small gravel tr clay		GM							
	SS: redish Pink vf-fg									
	TD @ 27' Bedrock at 26.5'									

EXPLANATION

- ▼ Water Table (24 Hour)
- ▽ Water Table (Time of Boring)
- PID Photoionization Detection (ppm)
- NO. Identifies Sample by Number
- TYPE Sample Collection Method

SPLIT-BARREL | AUGER | ROCK CORE | THIN-WALLED TUBE | CONTINUOUS SAMPLER | NO RECOVERY

DEPTH. Depth Top and Bottom of Sample
REC. Actual Length of Recovered Sample in Feet

GRAPHIC LOG LEGEND

CLAY | DEBRIS FILL | SILT | HIGHLY ORGANIC (PEAT) | SAND | SANDY CLAY | GRAVEL | CLAYEY SAND | SILTY CLAY | CLAYEY SILT

DATE DRILLED	4/2/03
PAGE	1 of 1
DRILLING METHOD	HSA
DRILLED BY	AEI
LOGGED BY	J. Crawford
EXISTING GRADE ELEVATION (FT. AMSL)	937.1 PIN 939.2 TOC
LOCATION OR GRID COORDINATES	900N - 260E

KERR-McGEE CORPORATION
HYDROLOGY DEPARTMENT
MONITORING WELL INSTALLATION DIAGRAM

Protective Pipe
Yes ☐ No ☐
Steel ☐ PVC ☐
Surveying Pin ?
Yes ☐ No ☐

Casing Cap Vent ? Yes ☐ No ☐
Lock ? Yes ☐ No ☐
Weep Hole ? Yes ☐ No ☐
Concrete Pad ____ Ft. x ____ Ft. x 4 Inches

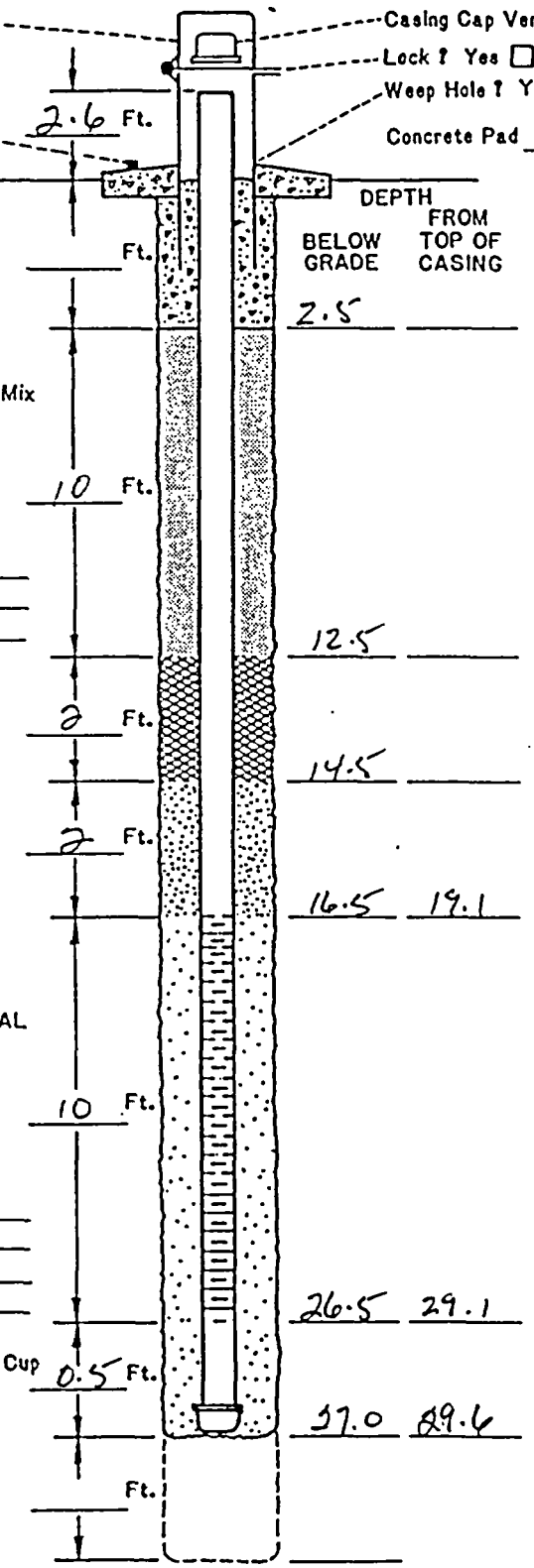

DRILLING INFORMATION:

1. Borehole Diameter= 8 3/4 Inches.
2. Were Drilling Additives Used ? Yes ☐ No ☒
   Revert ☐ Bentonite ☐ Water ☐
   Solid Auger ☐ Hollow Stem Auger ☐
3. Was Outer Steel Casing Used ? Yes ☐ No ☒
   Depth= ____ to ____ Feet.
4. Borehole Diameter for Outer Casing ____ Inches.

WELL CONSTRUCTION INFORMATION:

1. Type of Casing: PVC ☒ Galvanized ☐ Teflon ☐
   Stainless ☐ Other ____
2. Type of Casing Joints: Screw-Couple ☒ Glue-Couple ☐ Other ____
3. Type of Well Screen: PVC ☒ Galvanized ☐
   Stainless ☐ Teflon ☐ Other ____
4. Diameter of Casing and Well Screen:
   Casing 2" Inches, Screen 2" Inches.
5. Slot Size of Screen: 10
6. Type of Screen Perforation: Factory Slotted ☒
   Hacksaw ☐ Drilled ☐ Other ____
7. Installed Protector Pipe w/Lock: Yes ☐ No ☐

WELL DEVELOPMENT INFORMATION:

1. How was Well Developed ? Bailing ☐ Pumping ☐
   Air Surging (Air or Nitrogen) ☒ Other ____
2. Time Spent on Well Development ?
   2.75hr / ____ Minutes/Hours
3. Approximate Water Volume Removed ? 475 Gallons
4. Water Clarity Before Development ? Clear ☐
   Turbid ☒ Opaque ☐
5. Water Clarity After Development ? Clear ☒
   Turbid ☐ Opaque ☐
6. Did Water have Odor ? Yes ☐ No ☒
   If Yes, Describe ____
7. Did Water have any Color ? Yes ☐ No ☒
   If Yes, Describe ____

WATER LEVEL INFORMATION:

Water Level Summary (From Top of Casing)

During Drilling 6 Ft. Date 4-2
Before Development 6.49 Ft. Date 4-2
After Development ____ Ft. Date ____

Driller/Firm AEI
Drill Rig Type F-10
Date Installed 4-2-03
Drill Crew Graham/Foster
Well No. T-52
Kerr-McGee Hydrologist J. Crawford

SOIL BORING LOG KM—5655-A

KERR-McGEE CORPORATION Hydrology Dept. Engineering Services	KM SUBSIDIARY CIMARRON	LOCATION 900N - 360E	BORING NUMBER T-53

DEPTH IN FEET	LITHOLOGIC DESCRIPTION	GRAPHIC LOG	UNIFIED SOIL FIELD CLASS.	BLOWS PER FOOT	PID (ppm)	SOIL SAMPLE NO.	TYPE	DEPTH	REC.	REMARKS OR FIELD OBSERVATIONS
	Silty Clay									
5										Samples logged from auger flights
	Sand strg brn 7.5YR 4/6 f-mg loose sb rd		SW							
10										
15										
20	Sand yel rd 5YR 4/6 crs-v crs sm grvl 1/8" mostly qtz		SW							
25										
	Sandstone @ 26.0									
	Bedrock at 26'									
	TD 27'									

EXPLANATION

- Water Table (24 Hour)
- Water Table (Time of Boring)
- PID Photoionization Detection (ppm)
- NO. Identifies Sample by Number
- TYPE Sample Collection Method

SPLIT-BARREL; AUGER; ROCK CORE; THIN-WALLED TUBE; CONTINUOUS SAMPLER; NO RECOVERY

DEPTH. Depth Top and Bottom of Sample
REC. Actual Length of Recovered Sample in Feet

GRAPHIC LOG LEGEND

CLAY; DEBRIS FILL; SILT; HIGHLY ORGANIC (PEAT); SAND; SANDY CLAY; GRAVEL; CLAYEY SAND; SILTY CLAY; CLAYEY SILT

DATE DRILLED	PAGE
4-2-03	1 of 1

DRILLING METHOD: HSA

DRILLED BY: AEI

LOGGED BY: J Crawford

EXISTING GRADE ELEVATION (FT. AMSL): 936.4 PIW 938.8 TOC

LOCATION OR GRID COORDINATES: 900N - 360E

KERR-McGEE CORPORATION
HYDROLOGY DEPARTMENT
MONITORING WELL INSTALLATION DIAGRAM

Protective Pipe
Yes ☐ No ☐
Steel ☐ PVC ☐
Surveying Pin ?
Yes ☐ No ☐

Casing Cap Vent ? Yes ☐ No ☐
Lock ? Yes ☐ No ☐
Weep Hole ? Yes ☐ No ☐

Concrete Pad 3 Ft. x 3 Ft. x 4 Inches

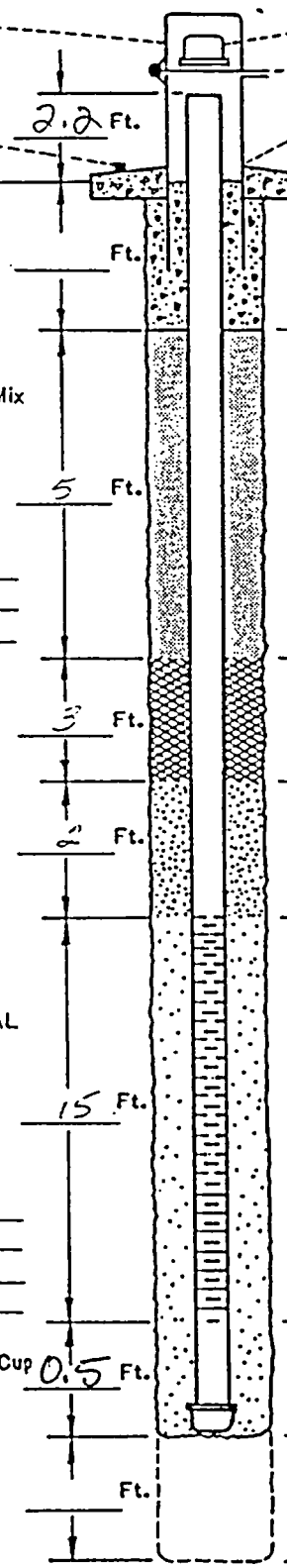

DRILLING INFORMATION:

1. Borehole Diameter= 8 3/4 Inches.
2. Were Drilling Additives Used ? Yes ☐ No ☒
   Revert ☐ Bentonite ☐ Water ☐
   Solid Auger ☐ Hollow Stem Auger ☐
3. Was Outer Steel Casing Used ? Yes ☐ No ☒
   Depth= _____ to _____ Feet.
4. Borehole Diameter for Outer Casing _____ Inches.

WELL CONSTRUCTION INFORMATION:

1. Type of Casing: PVC ☒ Galvanized ☐ Teflon ☐
   Stainless ☐ Other _____
2. Type of Casing Joints: Screw-Couple ☒ Glue-Couple ☐ Other _____
3. Type of Well Screen: PVC ☒ Galvanized ☐
   Stainless ☐ Teflon ☐ Other _____
4. Diameter of Casing and Well Screen:
   Casing 2 Inches, Screen 2 Inches.
5. Slot Size of Screen: 10
6. Type of Screen Perforation: Factory Slotted ☒
   Hacksaw ☐ Drilled ☐ Other _____
7. Installed Protector Pipe w/Lock: Yes ☒ No ☐

WELL DEVELOPMENT INFORMATION:

1. How was Well Developed ? Bailing ☐ Pumping ☐
   Air Surging (Air or Nitrogen) ☒ Other _____
2. Time Spent on Well Development ?
   2.75hr / _____ Minutes/Hours
3. Approximate Water Volume Removed ? 475 Gallons
4. Water Clarity Before Development ? Clear ☐
   Turbid ☒ Opaque ☐
5. Water Clarity After Development ? Clear ☒
   Turbid ☐ Opaque ☐
6. Did Water have Odor ? Yes ☐ No ☒
   If Yes, Describe _____
7. Did Water have any Color ? Yes ☐ No ☒
   If Yes, Describe _____

WATER LEVEL INFORMATION:

Water Level Summary (From Top of Casing)

During Drilling 6 Ft. Date 4-2
Before Development 5.96 gl Ft. Date 4/3/03
After Development _____ Ft. Date _____

Driller/Firm AEI
Drill Rig Type F-10
Date Installed 4-2-03
Drill Crew Graham/Foster
Well No. T-53
Kerr-McGee Hydrologist J. Crawford

SOIL BORING LOG KM—5655-A

KERR-McGEE CORPORATION Hydrology Dept. Engineering Services	KM SUBSIDIARY Cimarron	LOCATION	BORING NUMBER T-54

DEPTH IN FEET	LITHOLOGIC DESCRIPTION	GRAPHIC LOG	UNIFIED SOIL FIELD CLASS.	BLOWS PER FOOT	PID (ppm)	SOIL SAMPLE NO.	TYPE	DEPTH	REC.	REMARKS OR FIELD OBSERVATIONS
	Clay: silty, stiff, 2.5 YR4/6		ML							
	Sand: silty, 2.5YR4/6		SP							
5	Clay; stiff, 2.5YR4/6		CM			1		5	4.9	
	Sand: fn, loose, moist, 2.5YR4/8		SP							▽
10	Sand: fn-med, subrdd, loose, 7.5YR5/6, brn		SW			2		10	3.2	
	Sand: 5YR4/6, loose, m-crs, some v crs, w. grd		SW			3		15	—	Auger rest of hole
15	Bedrock: clay, slty w/ sm sand, 10YR4/8, firm					4		16	—	
	TD 16.0'									

EXPLANATION

▼ Water Table (24 Hour)

▽ Water Table (Time of Boring)

PID Photoionization Detection (ppm)

NO. Identifies Sample by Number

TYPE Sample Collection Method

SPLIT-BARREL | AUGER | ROCK CORE

THIN-WALLED TUBE | CONTINUOUS SAMPLER | NO RECOVERY

DEPTH Depth Top and Bottom of Sample

REC. Actual Length of Recovered Sample in Feet

GRAPHIC LOG LEGEND

CLAY | DEBRIS FILL

SILT | HIGHLY ORGANIC (PEAT)

SAND | SANDY CLAY

GRAVEL | CLAYEY SAND

SILTY CLAY | ____

CLAYEY SILT | ____

DATE DRILLED 4/2/03 | PAGE of

DRILLING METHOD HSA

DRILLED BY B. Graham

LOGGED BY J. Crawford

EXISTING GRADE ELEVATION (FT. AMSL) TOC 937.7 Pin 940.4

LOCATION OR GRID COORDINATES

KERR-McGEE CORPORATION
HYDROLOGY DEPARTMENT
MONITORING WELL INSTALLATION DIAGRAM

Protective Pipe
Yes ☐ No ☐
Steel ☐ PVC ☐
Surveying Pin ? Yes ☐ No ☐

Casing Cap Vent ? Yes ☐ No ☐
Lock ? Yes ☐ No ☐
Weep Hole ? Yes ☐ No ☐
Concrete Pad 3 Ft. x 3 Ft. x 4 Inches

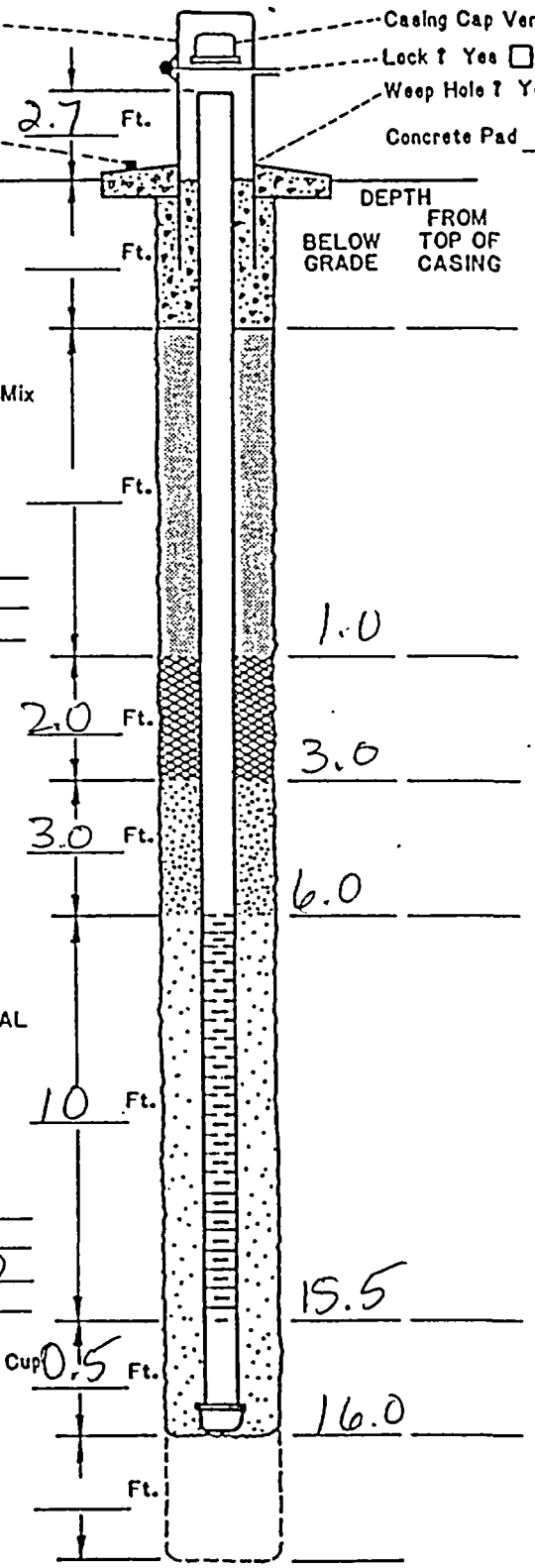

		DEPTH BELOW GRADE	DEPTH FROM TOP OF CASING
Concrete	2.7 Ft.		
Cement/Bentonite Grout Mix Yes ☐ No ☐ 5.5 Gallons Water to 94Lb. Bag Cement & 3-5 Lb. Bentonite Powder Other:	Ft.	1.0	
Bentonite Seal Pellets ☐ Slurry ☐	2.0 Ft.	3.0	
Filter Pack Above Screen	3.0 Ft.	6.0	
FILTER PACK MATERIAL Silica Sand ☒ Washed Sand ☐ Pea Gravel ☐ Other: Sand Size 10-20	10 Ft.	15.5	
Dense Phase Sampling Cup Bottom Plug Yes ☐ No ☐	0.5 Ft.	16.0	
Overdrilled Material Backfill Grout ☐ Sand ☐ Caved Material ☐ Other:	Ft.		

DRILLING INFORMATION:

1. Borehole Diameter= 8 3/4 Inches.
2. Were Drilling Additives Used ? Yes ☐ No ☒
   Revert ☐ Bentonite ☐ Water ☐
   Solid Auger ☐ Hollow Stem Auger ☐
3. Was Outer Steel Casing Used ? Yes ☐ No ☒
   Depth= _____ to _____ Feet.
4. Borehole Diameter for Outer Casing _____ Inches.

WELL CONSTRUCTION INFORMATION:

1. Type of Casing: PVC ☒ Galvanized ☐ Teflon ☐
   Stainless ☐ Other _____
2. Type of Casing Joints: Screw-Couple ☒ Glue-Couple ☐ Other _____
3. Type of Well Screen: PVC ☒ Galvanized ☐
   Stainless ☐ Teflon ☐ Other _____
4. Diameter of Casing and Well Screen:
   Casing 2 Inches, Screen 2 Inches.
5. Slot Size of Screen: 10
6. Type of Screen Perforation: Factory Slotted ☒
   Hacksaw ☐ Drilled ☐ Other _____
7. Installed Protector Pipe w/Lock: Yes ☒ No ☐

WELL DEVELOPMENT INFORMATION:

1. How was Well Developed ? Bailing ☐ Pumping ☐
   Air Surging (Air or Nitrogen) ☐ Other _____
2. Time Spent on Well Development ?
   2.75hr / _____ Minutes/Hours
3. Approximate Water Volume Removed ? 475 Gallons
4. Water Clarity Before Development ? Clear ☐
   Turbid ☒ Opaque ☐
5. Water Clarity After Development ? Clear ☒
   Turbid ☐ Opaque ☐
6. Did Water have Odor ? Yes ☐ No ☒
   If Yes, Describe _____
7. Did Water have any Color ? Yes ☐ No ☒
   If Yes, Describe _____

WATER LEVEL INFORMATION:

Water Level Summary (From Top of Casing)

During Drilling 7.0 gl Ft. Date 4/2/03
Before Development 6.1 Pgl Ft. Date 4/3/03
After Development _____ Ft. Date _____

Driller/Firm AEI
Drill Rig Type Failing F10
Date Installed 4/2/03
Drill Crew B. Graham / Foster
Well No. T-54
Kerr-McGee Hydrologist J. Crawford

SOIL BORING LOG KM-5655-A

KERR-McGEE CORPORATION Hydrology Dept. Engineering Services	KM SUBSIDIARY CIMARRON	LOCATION	BORING NUMBER T-55

DEPTH IN FEET	LITHOLOGIC DESCRIPTION	GRAPHIC LOG	UNIFIED SOIL FIELD CLASS.	BLOWS PER FOOT	PID (ppm)	SOIL SAMPLE NO.	TYPE	DEPTH	REC.	REMARKS OR FIELD OBSERVATIONS
	Clay: 7.5YR3/4 plastic, silty moist		CH							13:-
5	Clay					1		5.0		
	Sand vfn 7.5YR4/6		SM							Water Level ▽
10	Sand: vfn-fn 7.5YR4/6		SM			2		10.0		
15	Bedrock 14.5': fn snd some thin clay beds					3		15.0		
	TD 16' 2.5YR4/6					4				13:4

EXPLANATION

- ▼ Water Table (24 Hour)
- ▽ Water Table (Time of Boring)
- PID Photoionization Detection (ppm)
- NO. Identifies Sample by Number
- TYPE Sample Collection Method

SPLIT-BARREL · AUGER · ROCK CORE · THIN-WALLED TUBE · CONTINUOUS SAMPLER · NO RECOVERY

DEPTH. Depth Top and Bottom of Sample
REC. Actual Length of Recovered Sample in Feet

GRAPHIC LOG LEGEND

CLAY · DEBRIS FILL · SILT · HIGHLY ORGANIC (PEAT) · SAND · SANDY CLAY · GRAVEL · CLAYEY SAND · SILTY CLAY · CLAYEY SILT

DATE DRILLED	PAGE
4/2/03	1 of 1

DRILLING METHOD: Auger

DRILLED BY: B. Graham

LOGGED BY: J. Poor

EXISTING GRADE ELEVATION (FT. AMSL): 936.3 PN 938.8 TOC

LOCATION OR GRID COORDINATES

KERR-McGEE CORPORATION
HYDROLOGY DEPARTMENT
MONITORING WELL INSTALLATION DIAGRAM

Protective Pipe
Yes ☐ No ☐
Steel ☐ PVC ☐
Surveying Pin ?
Yes ☐ No ☐

Casing Cap Vent ? Yes ☐ No ☐
Lock ? Yes ☐ No ☐
Weep Hole ? Yes ☐ No ☐
Concrete Pad 3 Ft. x 3 Ft. x 4 Inches

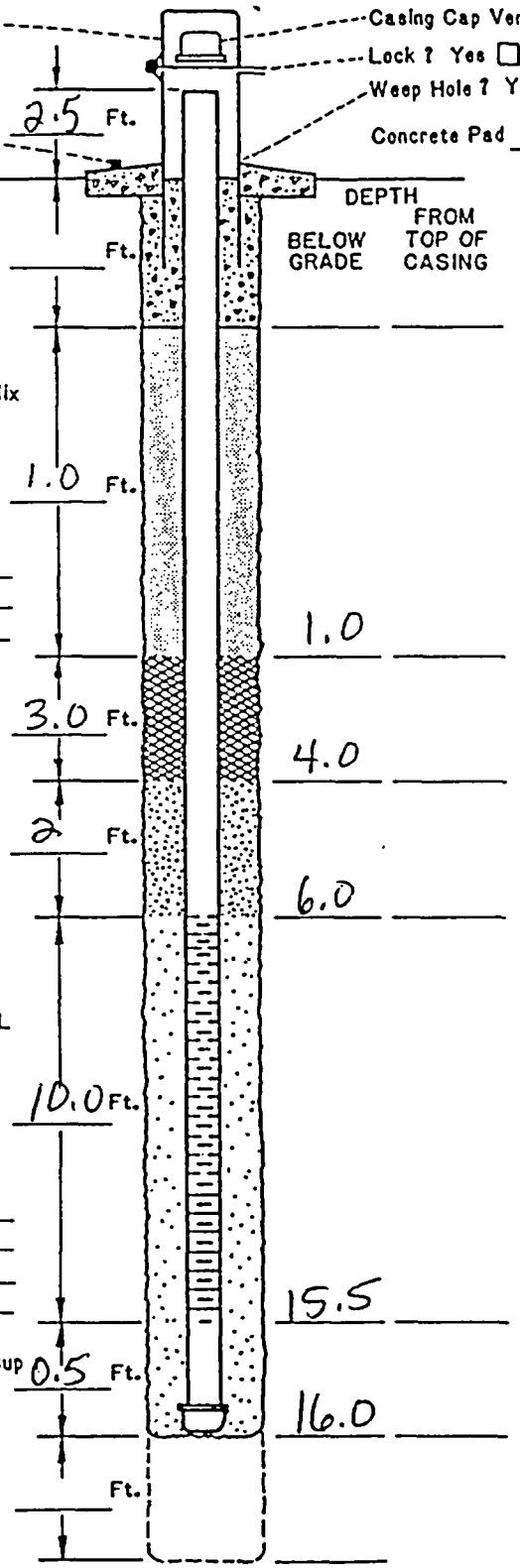

Cement/Bentonite Grout Mix
Yes ☐ No ☐
5.5 Gallons Water to 94Lb. Bag Cement & 3-5 Lb. Bentonite Powder
Other: _____

Bentonite Seal
Pellets ☐ Slurry ☐

Filter Pack Above Screen

FILTER PACK MATERIAL
Silica Sand ☐
Washed Sand ☐
Pea Gravel ☐
Other: _____
Sand Size _____

Dense Phase Sampling Cup
Bottom Plug
Yes ☐ No ☐

Overdrilled Material Backfill
Grout ☐ Sand ☐
Caved Material ☐
Other: _____

DRILLING INFORMATION:

1. Borehole Diameter= 8 3/4 Inches.
2. Were Drilling Additives Used ? Yes ☐ No ☒
   Revert ☐ Bentonite ☐ Water ☐
   Solid Auger ☐ Hollow Stem Auger ☐
3. Was Outer Steel Casing Used ? Yes ☐ No ☒
   Depth= _____ to _____ Feet.
4. Borehole Diameter for Outer Casing _____ Inches.

WELL CONSTRUCTION INFORMATION:

1. Type of Casing: PVC ☒ Galvanized ☐ Teflon ☐
   Stainless ☐ Other _____
2. Type of Casing Joints: Screw-Couple ☒ Glue-Couple ☐ Other _____
3. Type of Well Screen: PVC ☒ Galvanized ☐
   Stainless ☐ Teflon ☐ Other _____
4. Diameter of Casing and Well Screen:
   Casing 2 Inches, Screen 2 Inches.
5. Slot Size of Screen: 10
6. Type of Screen Perforation: Factory Slotted ☒
   Hacksaw ☐ Drilled ☐ Other _____
7. Installed Protector Pipe w/Lock: Yes ☒ No ☐

WELL DEVELOPMENT INFORMATION:

1. How was Well Developed ? Bailing ☐ Pumping ☐
   Air Surging (Air or Nitrogen) ☒ Other _____
2. Time Spent on Well Development ?
   1.5 hr / _____ Minutes/Hours 3 gpm
3. Approximate Water Volume Removed ? 270 Gallons
4. Water Clarity Before Development ? Clear ☐
   Turbid ☒ Opaque ☐
5. Water Clarity After Development ? Clear ☒
   Turbid ☐ Opaque ☐
6. Did Water have Odor ? Yes ☐ No ☒
   If Yes, Describe _____
7. Did Water have any Color ? Yes ☐ No ☒
   If Yes, Describe _____

WATER LEVEL INFORMATION:

Water Level Summary (From Top of Casing)

During Drilling 7' GL Ft. Date _____
Before Development 4.90 GL Ft. Date 4/3/03
After Development _____ Ft. Date _____

Driller/Firm AEI
Drill Rig Type Failing
Date Installed 4/2/03
Drill Crew B. Graham
Well No. T 55
Kerr-McGee Hydrologist J. Poor

SOIL BORING LOG KM—5655-A

KERR-McGEE CORPORATION Hydrology Dept. Engineering Services	KM SUBSIDIARY Cimarron	LOCATION	BORING NUMBER T 56

DEPTH IN FEET	LITHOLOGIC DESCRIPTION	GRAPHIC LOG	UNIFIED SOIL FIELD CLASS.	BLOWS PER FOOT	PID (ppm)	SOIL SAMPLE NO.	TYPE	DEPTH	REC.	REMARKS OR FIELD OBSERVATIONS
	Silt		MH							14:8
	Clay									
			CL			1		5		
5										
	Sand: 6.8': fn, vfn 5YR 5/6		SM							▽ Water 6.5
						2		10		
10										
						3		15		
15	Bedrock; 14.0, clay w/SS, gravel 1", 5YR4/6									14:2
	TD 15.0'									

EXPLANATION

- ▼ Water Table (24 Hour)
- ▽ Water Table (Time of Boring)
- PID Photoionization Detection (ppm)
- NO. Identifies Sample by Number
- TYPE Sample Collection Method

SPLIT-BARREL | AUGER | ROCK CORE | THIN-WALLED TUBE | CONTINUOUS SAMPLER | NO RECOVERY

DEPTH Depth Top and Bottom of Sample
REC. Actual Length of Recovered Sample in Feet

GRAPHIC LOG LEGEND

CLAY | DEBRIS FILL | SILT | HIGHLY ORGANIC (PEAT) | SAND | SANDY CLAY | GRAVEL | CLAYEY SAND | SILTY CLAY | CLAYEY SILT

DATE DRILLED	PAGE
4/2/03	1 of 1

DRILLING METHOD: Auger

DRILLED BY: B. Graham

LOGGED BY: J. Poor

EXISTING GRADE ELEVATION (FT. AMSL): 935.9 PIN 938.1 TOC

LOCATION OR GRID COORDINATES

KERR-McGEE CORPORATION
HYDROLOGY DEPARTMENT
MONITORING WELL INSTALLATION DIAGRAM

Protective Pipe
Yes ☐ No ☐
Steel ☐ PVC ☐
Surveying Pin ?
Yes ☐ No ☐

Casing Cap Vent ? Yes ☐ No ☐
Lock ? Yes ☐ No ☐
Weep Hole ? Yes ☐ No ☐
Concrete Pad 3 Ft. x 3 Ft. x 4 Inches

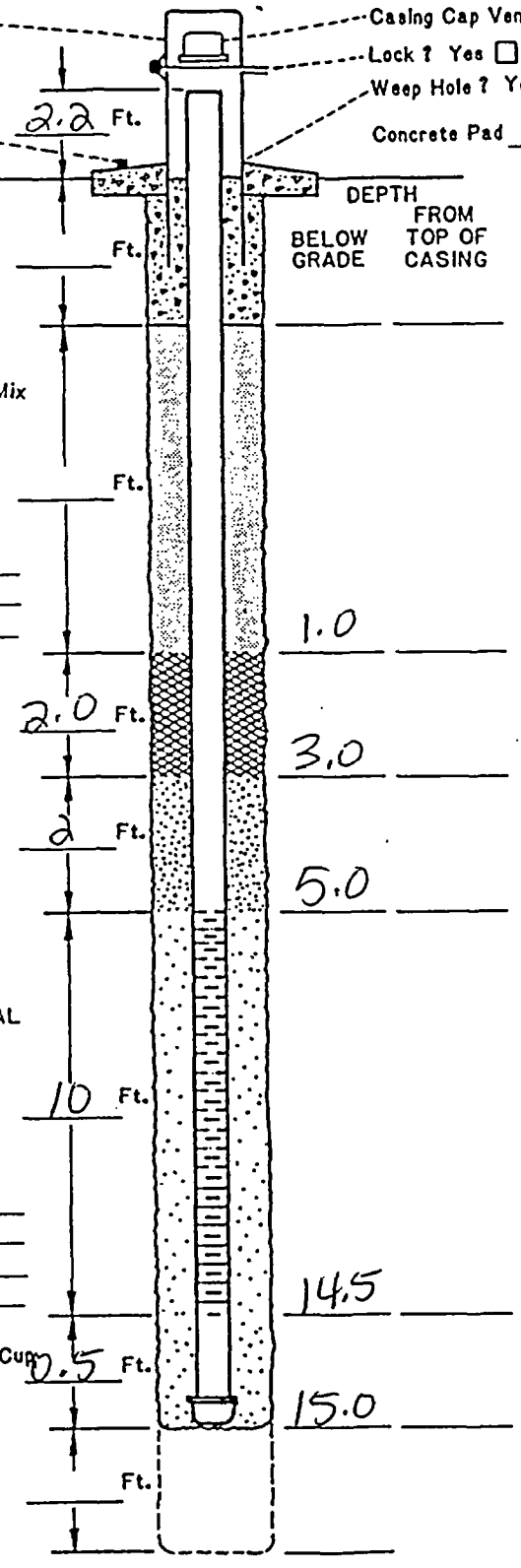

DRILLING INFORMATION:

1. Borehole Diameter= 8 3/4 Inches.
2. Were Drilling Additives Used ? Yes ☐ No ☒
   Revert ☐ Bentonite ☐ Water ☐
   Solid Auger ☐ Hollow Stem Auger ☐
3. Was Outer Steel Casing Used ? Yes ☐ No ☒
   Depth= _____ to _____ Feet.
4. Borehole Diameter for Outer Casing _____ Inches.

WELL CONSTRUCTION INFORMATION:

1. Type of Casing: PVC ☒ Galvanized ☐ Teflon ☐
   Stainless ☐ Other _____
2. Type of Casing Joints: Screw-Couple ☒ Glue-Couple ☐ Other _____
3. Type of Well Screen: PVC ☒ Galvanized ☐
   Stainless ☐ Teflon ☐ Other _____
4. Diameter of Casing and Well Screen:
   Casing 2 Inches, Screen 2 Inches.
5. Slot Size of Screen: 10
6. Type of Screen Perforation: Factory Slotted ☒
   Hacksaw ☐ Drilled ☐ Other _____
7. Installed Protector Pipe w/Lock: Yes ☒ No ☐

WELL DEVELOPMENT INFORMATION:

1. How was Well Developed ? Bailing ☐ Pumping ☐
   Air Surging (Air or Nitrogen) ☒ Other _____
2. Time Spent on Well Development ?
   1.5 / _____ Minutes/Hours 3 gpm
3. Approximate Water Volume Removed ? 270 Gallons
4. Water Clarity Before Development ? Clear ☐
   Turbid ☒ Opaque ☐
5. Water Clarity After Development ? Clear ☒
   Turbid ☐ Opaque ☐
6. Did Water have Odor ? Yes ☐ No ☒
   If Yes, Describe _____
7. Did Water have any Color ? Yes ☐ No ☒
   If Yes, Describe _____

WATER LEVEL INFORMATION:

Water Level Summary (From Top of Casing)

During Drilling 6.56 Ft. Date _____
Before Development 4.48 Ft. Date 4/3/03
After Development _____ Ft. Date _____

Driller/Firm AEI
Drill Rig Type Failing
Date Installed 4/2/03
Drill Crew B. Graham
Well No. T56
Kerr-McGee Hydrologist J. Poor

SOIL BORING LOG KM—5655-A

KERR-McGEE CORPORATION Hydrology Dept. Engineering Services	KM SUBSIDIARY Cimarron	LOCATION N600, E300	BORING NUMBER T57

DEPTH IN FEET	LITHOLOGIC DESCRIPTION	GRAPHIC LOG	UNIFIED SOIL FIELD CLASS.	BLOWS PER FOOT	PID (ppm)	SOIL SAMPLE NO.	TYPE	DEPTH	REC.	REMARKS OR FIELD OBSERVATIONS
	Sand: silty, 5YR 5/6		ML							15:2
	Clay: silty, 5YR 4/3 lean,		CL			1		5		
5	Sand: fn, vfn, w. srt, p. grad, moist, w. rdd, 5YR 5/6		SP							▽
						2		10		
10	Sand: med, p. grd, w rdd, 5YR 5/6		SP							
						3		15		
15	Sand: med,		SP							
	Sand: crs					4		19		
	Bedrock: 18.0', tr. clay 2.5YR 4/8, large SS pieces									15:5
20	TD 19.0									

EXPLANATION

- ▼ Water Table (24 Hour)
- ▽ Water Table (Time of Boring)
- PID Photoionization Detection (ppm)
- NO. Identifies Sample by Number
- TYPE Sample Collection Method

SPLIT-BARREL | AUGER | ROCK CORE | THIN-WALLED TUBE | CONTINUOUS SAMPLER | NO RECOVERY

DEPTH Depth Top and Bottom of Sample
REC. Actual Length of Recovered Sample in Feet

GRAPHIC LOG LEGEND

CLAY | DEBRIS FILL | SILT | HIGHLY ORGANIC (PEAT) | SAND | SANDY CLAY | GRAVEL | CLAYEY SAND | SILTY CLAY | ____ | CLAYEY SILT | ____

DATE DRILLED	PAGE
4/2/03	of

DRILLING METHOD: HSA

DRILLED BY: AEI - B. Graham

LOGGED BY: J. Poor

EXISTING GRADE ELEVATION (FT AMSL): TOC 939.6, pin 937.4

LOCATION OR GRID COORDINATES: N 600 E 300

KERR-McGEE CORPORATION
HYDROLOGY DEPARTMENT
MONITORING WELL INSTALLATION DIAGRAM

Protective Pipe
Yes ☒ No ☐
Steel ☒ PVC ☐
Surveying Pin ?
Yes ☒ No ☐

Casing Cap Vent ? Yes ☒ No ☐
Lock ? Yes ☒ No ☐
Weep Hole ? Yes ☒ No ☐
Concrete Pad 3 Ft. x 3 Ft. x 4 Inches

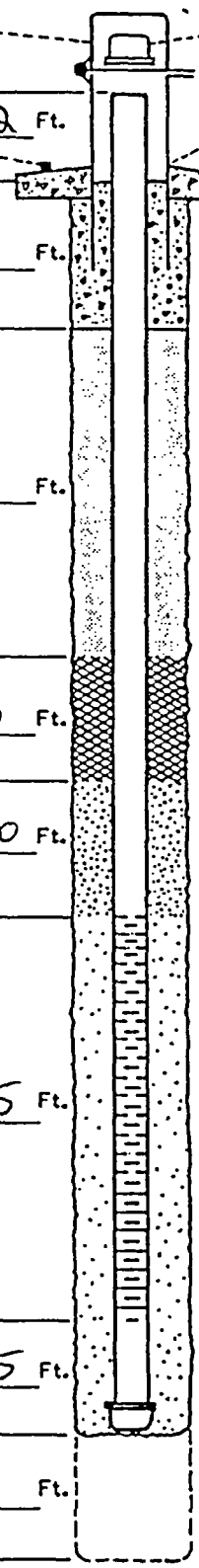

		DEPTH BELOW GRADE	DEPTH FROM TOP OF CASING
	2.2 Ft.		
Concrete	Ft.	0	
Cement/Bentonite Grout Mix Yes ☐ No ☒ 5.5 Gallons Water to 94Lb. Bag Cement & 3-5 Lb. Bentonite Powder	Ft.	1.0	
Bentonite Seal Pellets ☐ Slurry ☐	2.0 Ft.	3.0	
Filter Pack Above Screen	1.0 Ft.	4.0	
FILTER PACK MATERIAL Silica Sand ☒ Washed Sand ☐ Pea Gravel ☐ Sand Size 10-20	15 Ft.	19.5	
Dense Phase Sampling Cup Bottom Plug Yes ☐ No ☐	0.5 Ft.	19	
Overdrilled Material Backfill Grout ☐ Sand ☐ Caved Material ☐	Ft.		

Other: _____

DRILLING INFORMATION:

1. Borehole Diameter= 8 3/4 Inches.
2. Were Drilling Additives Used ? Yes ☐ No ☒
   Revert ☐ Bentonite ☐ Water ☐
   Solid Auger ☐ Hollow Stem Auger ☐
3. Was Outer Steel Casing Used ? Yes ☐ No ☒
   Depth= _____ to _____ Feet.
4. Borehole Diameter for Outer Casing _____ Inches.

WELL CONSTRUCTION INFORMATION:

1. Type of Casing: PVC ☒ Galvanized ☐ Teflon ☐
   Stainless ☐ Other _____
2. Type of Casing Joints: Screw-Couple ☒ Glue-Couple ☐ Other _____
3. Type of Well Screen: PVC ☒ Galvanized ☐
   Stainless ☐ Teflon ☐ Other _____
4. Diameter of Casing and Well Screen:
   Casing 2 Inches, Screen 2 Inches.
5. Slot Size of Screen: 10
6. Type of Screen Perforation: Factory Slotted ☒
   Hacksaw ☐ Drilled ☐ Other _____
7. Installed Protector Pipe w/Lock: Yes ☒ No ☐

WELL DEVELOPMENT INFORMATION:

1. How was Well Developed ? Bailing ☐ Pumping ☐
   Air Surging (Air or Nitrogen) ☒ Other _____
2. Time Spent on Well Development ?
   _____ / 3hrs Minutes/Hours
3. Approximate Water Volume Removed ? 450 Gallons
4. Water Clarity Before Development ? Clear ☐
   Turbid ☒ Opaque ☐
5. Water Clarity After Development ? Clear ☒
   Turbid ☐ Opaque ☐
6. Did Water have Odor ? Yes ☐ No ☒
   If Yes, Describe _____
7. Did Water have any Color ? Yes ☐ No ☒
   If Yes, Describe _____

WATER LEVEL INFORMATION:

Water Level Summary (From Top of Casing)

During Drilling 6.0 gl Ft. Date 4/2/03
Before Development 5.75 gl Ft. Date 4/3/03
After Development _____ Ft. Date _____

Driller/Firm AEI
Drill Rig Type Failing F-10
Date Installed 4/2/03
Drill Crew Graham / Foster
Well No. T-57
Kerr-McGee Hydrologist J. Poor

SOIL BORING LOG KM—5655-A

KERR-McGEE CORPORATION Hydrology Dept. Engineering Services	KM SUBSIDIARY Cimarron	LOCATION 525 N, 210 E	BORING NUMBER T 58

DEPTH IN FEET	LITHOLOGIC DESCRIPTION	GRAPHIC LOG	UNIFIED SOIL FIELD CLASS.	BLOWS PER FOOT	PID (ppm)	SOIL SAMPLE NO.	TYPE	DEPTH	REC.	REMARKS OR FIELD OBSERVATIONS
	Silt:		ML							1615
	Clay; med plasticity 5YR 4/3		CL			1		5		
5	Sand: 2.5 YR 5/6 fn, p grd		SP			2		10		▽
10	Sand, 2.5YR 5/6 med. p grd, w rdd		SP			3		15		
15	Sand, ↑crs, wrdd, w grd, 2.5YR 5/6		SW							
	Bedrock: 19' clay w/ SS					4		20		1602
	TD 20'									

EXPLANATION

- ▼ Water Table (24 Hour)
- ▽ Water Table (Time of Boring)
- PID Photoionization Detection (ppm)
- NO. Identifies Sample by Number
- TYPE Sample Collection Method

SPLIT-BARREL | AUGER | ROCK CORE | THIN-WALLED TUBE | CONTINUOUS SAMPLER | NO RECOVERY

DEPTH Depth Top and Bottom of Sample
REC. Actual Length of Recovered Sample in Feet

GRAPHIC LOG LEGEND

CLAY | DEBRIS FILL | SILT | HIGHLY ORGANIC (PEAT) | SAND | SANDY CLAY | GRAVEL | CLAYEY SAND | SILTY CLAY | ____ | CLAYEY SILT | ____

DATE DRILLED	PAGE
4/2/03	of

DRILLING METHOD: HSA

DRILLED BY: AEI

LOGGED BY: J. Poor

EXISTING GRADE ELEVATION (FT. AMSL): TOC 939.5 pin 937.3

LOCATION OR GRID COORDINATES:

KERR-McGEE CORPORATION
HYDROLOGY DEPARTMENT
MONITORING WELL INSTALLATION DIAGRAM

Protective Pipe
Yes ☐ No ☐
Steel ☐ PVC ☐
Surveying Pin ? Yes ☐ No ☐

Casing Cap Vent ? Yes ☐ No ☐
Lock ? Yes ☐ No ☐
Weep Hole ? Yes ☐ No ☐
Concrete Pad 3 Ft. x 3 Ft. x 4 Inches

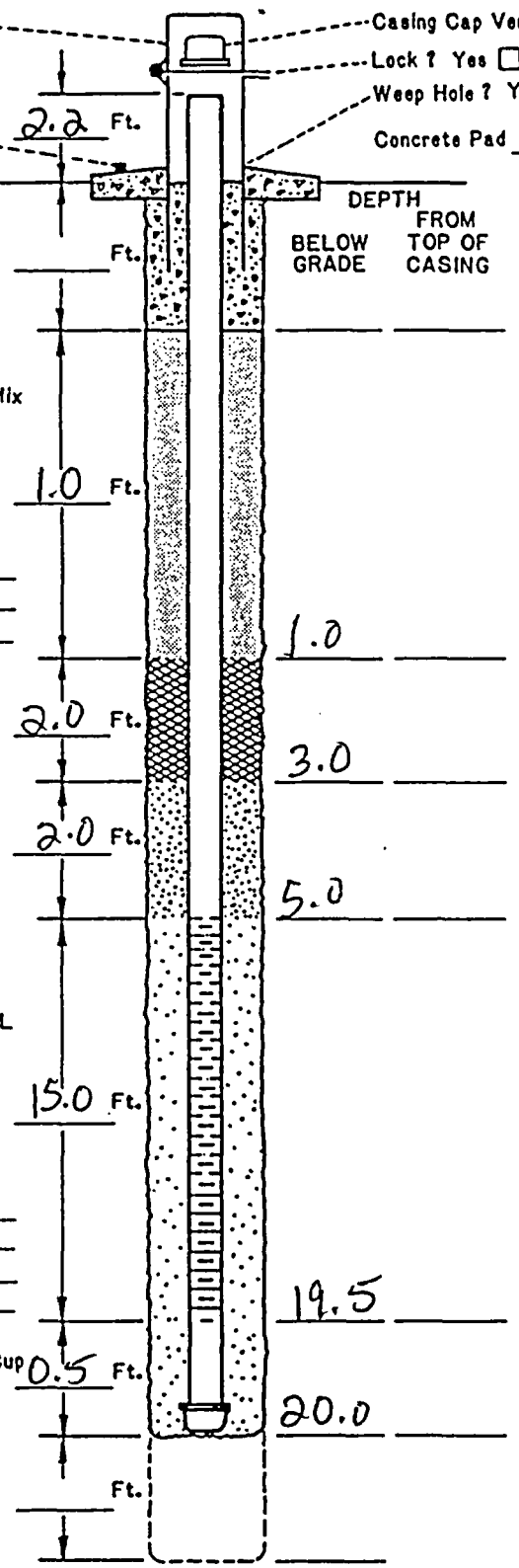

Other: _____

DEPTH BELOW GRADE | DEPTH FROM TOP OF CASING

Other: _____

DRILLING INFORMATION:

1. Borehole Diameter= 8 3/4 Inches.
2. Were Drilling Additives Used ? Yes ☐ No ☒
   Revert ☐ Bentonite ☐ Water ☐
   Solid Auger ☐ Hollow Stem Auger ☐
3. Was Outer Steel Casing Used ? Yes ☐ No ☒
   Depth= _____ to _____ Feet.
4. Borehole Diameter for Outer Casing _____ Inches.

WELL CONSTRUCTION INFORMATION:

1. Type of Casing: PVC ☒ Galvanized ☐ Teflon ☐
   Stainless ☐ Other _____
2. Type of Casing Joints: Screw-Couple ☒ Glue-Couple ☐ Other _____
3. Type of Well Screen: PVC ☒ Galvanized ☐
   Stainless ☐ Teflon ☐ Other _____
4. Diameter of Casing and Well Screen:
   Casing 2 Inches, Screen 2 Inches.
5. Slot Size of Screen: 10
6. Type of Screen Perforation: Factory Slotted ☒
   Hacksaw ☐ Drilled ☐ Other _____
7. Installed Protector Pipe w/Lock: Yes ☒ No ☐

WELL DEVELOPMENT INFORMATION:

1. How was Well Developed ? Bailing ☐ Pumping ☐
   Air Surging (Air or Nitrogen) ☒ Other _____
2. Time Spent on Well Development ?
   1 3/4 Minutes/Hours
3. Approximate Water Volume Removed ? 400 Gallons
4. Water Clarity Before Development ? Clear ☐
   Turbid ☐ Opaque ☐
5. Water Clarity After Development ? Clear ☐
   Turbid ☐ Opaque ☐
6. Did Water have Odor ? Yes ☐ No ☐
   If Yes, Describe _____
7. Did Water have any Color ? Yes ☐ No ☐
   If Yes , Describe _____

WATER LEVEL INFORMATION:

Water Level Summary (From Top of Casing)

During Drilling 6.0 Ft. Date 4/2/03
Before Development 5.55 gl Ft. Date 4/3/03
After Development _____ Ft. Date _____

Driller/Firm AEI
Drill Rig Type Failing F-10
Date Installed 4/2/03
Drill Crew Graham / Foster
Well No. T58
Kerr-McGee Hydrologist J. Poor

SOIL BORING LOG KM—5655-A

KERR-McGEE CORPORATION Hydrology Dept. Engineering Services	KM SUBSIDIARY Cimarron	LOCATION 900N-450E	BORING NUMBER T-59

DEPTH IN FEET	LITHOLOGIC DESCRIPTION	GRAPHIC LOG	UNIFIED SOIL FIELD CLASS.	BLOWS PER FOOT	PID (ppm)	SOIL SAMPLE NO.	TYPE	DEPTH	REC.	REMARKS OR FIELD OBSERVATIONS
	Silt: fn sand, 5YR 5/4 dry		ML							08:4
	clayey silt 5YR5/4		ML-CL			1		5		
5	Sand: fn, w. srt, p. grd 5YR 5/6		SP							▽
	Sand: fn, w srt, 5YR5/6					2		10		
10			SP							
	Sand: fn, 5YR 5/6					3		15		
15	Sand: med, 5YR 5/6		SP							
						4		20		
20	Sand: fn w/ clay layers 10YR 3/6		SC							
	tr SS pieces, 1/2"		SM			5		25		
25	Sand: silty, 10YR 2/6									
	Bedrock: SS, 26.'					6		27.0		
	TD 27.0'									09:0

EXPLANATION

- ▼ Water Table (24 Hour)
- ▽ Water Table (Time of Boring)
- PID Photoionization Detection (ppm)
- NO. Identifies Sample by Number
- TYPE Sample Collection Method

SPLIT-BARREL | AUGER | ROCK CORE | THIN-WALLED TUBE | CONTINUOUS SAMPLER | NO RECOVERY

DEPTH Depth Top and Bottom of Sample
REC. Actual Length of Recovered Sample in Feet

GRAPHIC LOG LEGEND

CLAY | DEBRIS FILL | SILT | HIGHLY ORGANIC (PEAT) | SAND | SANDY CLAY | GRAVEL | CLAYEY SAND | SILTY CLAY | CLAYEY SILT

DATE DRILLED	PAGE
4/3/03	of

DRILLING METHOD: HSA

DRILLED BY: B. Graham

LOGGED BY: J. Poor

EXISTING GRADE ELEVATION (FT. AMSL): TOC 938.2 pin 936.2

LOCATION OR GRID COORDINATES: 900N-450E

KERR-McGEE CORPORATION
HYDROLOGY DEPARTMENT
MONITORING WELL INSTALLATION DIAGRAM

Protective Pipe
Yes ☐ No ☐
Steel ☐ PVC ☐
Surveying Pin ?
Yes ☐ No ☐

Casing Cap Vent ? Yes ☒ No ☐
Lock ? Yes ☐ No ☐
Weep Hole ? Yes ☒ No ☐
Concrete Pad 3 Ft. x 3 Ft. x 4 Inches

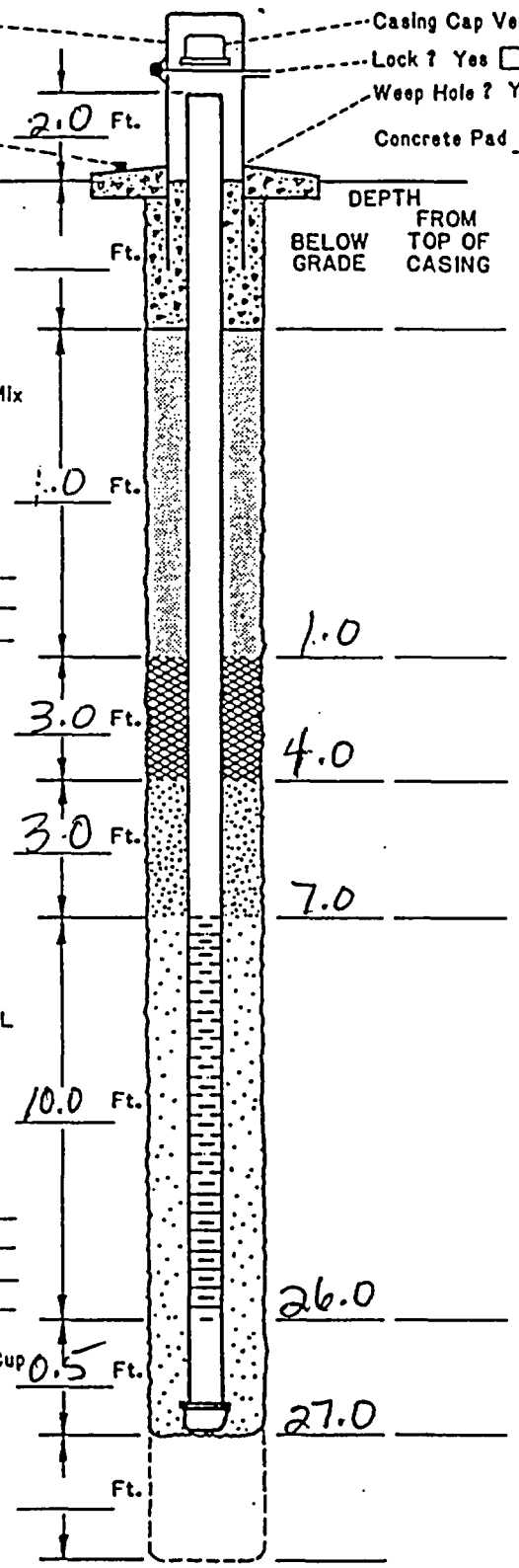

Cement/Bentonite Grout Mix
Yes ☐ No ☐
5.5 Gallons Water to 94Lb. Bag Cement & 3-5 Lb. Bentonite Powder
Other: _____

Bentonite Seal
Pellets ☐ Slurry ☐

Filter Pack Above Screen

FILTER PACK MATERIAL
Silica Sand ☐
Washed Sand ☐
Pea Gravel ☐
Other: _____
Sand Size _____

Dense Phase Sampling Cup
Bottom Plug
Yes ☐ No ☐

Overdrilled Material Backfill
Grout ☐ Sand ☐
Caved Material ☐
Other: _____

DRILLING INFORMATION:

1. Borehole Diameter= 8 3/4 Inches.
2. Were Drilling Additives Used ? Yes ☐ No ☒
   Revert ☐ Bentonite ☐ Water ☐
   Solid Auger ☐ Hollow Stem Auger ☐
3. Was Outer Steel Casing Used ? Yes ☐ No ☒
   Depth= _____ to _____ Feet.
4. Borehole Diameter for Outer Casing _____ Inches.

WELL CONSTRUCTION INFORMATION:

1. Type of Casing: PVC ☒ Galvanized ☐ Teflon ☐
   Stainless ☐ Other _____
2. Type of Casing Joints: Screw-Couple ☒ Glue-Couple ☐ Other _____
3. Type of Well Screen: PVC ☒ Galvanized ☐
   Stainless ☐ Teflon ☐ Other _____
4. Diameter of Casing and Well Screen:
   Casing 2 Inches, Screen 2 Inches.
5. Slot Size of Screen: 10
6. Type of Screen Perforation: Factory Slotted ☒
   Hacksaw ☐ Drilled ☐ Other _____
7. Installed Protector Pipe w/Lock: Yes ☒ No ☐

WELL DEVELOPMENT INFORMATION:

1. How was Well Developed ? Bailing ☐ Pumping ☐
   Air Surging (Air or Nitrogen) ☒ Other _____
2. Time Spent on Well Development ?
   _____ / 1 Minutes/Hours 4gpm
3. Approximate Water Volume Removed ? 240 Gallons
4. Water Clarity Before Development ? Clear ☐
   Turbid ☒ Opaque ☐
5. Water Clarity After Development ? Clear ☒
   Turbid ☐ Opaque ☐
6. Did Water have Odor ? Yes ☐ No ☒
   If Yes, Describe _____
7. Did Water have any Color ? Yes ☐ No ☒
   If Yes, Describe _____

WATER LEVEL INFORMATION:

Water Level Summary (From Top of Casing)

During Drilling 6.0 Ft. Date 2/3/03
Before Development 5.52gl Ft. Date 2/3/03
After Development _____ Ft. Date _____

Driller/Firm AEI
Drill Rig Type Failing F-10
Date Installed 4/3/03
Drill Crew Graham / Foster
Well No. T-59
Kerr-McGee Hydrologist J. Poor

SOIL BORING LOG KM—5655-A

KERR-McGEE CORPORATION Hydrology Dept. Engineering Services	KM SUBSIDIARY: Cimarron	LOCATION: 900N- 550E	BORING NUMBER: T60

DEPTH IN FEET	LITHOLOGIC DESCRIPTION	GRAPHIC LOG	UNIFIED SOIL FIELD CLASS.	BLOWS PER FOOT	PID (ppm)	SOIL SAMPLE NO.	TYPE	DEPTH	REC.	REMARKS OR FIELD OBSERVATIONS
	Silt:		ML							09:2
	Silt: clay 5YR4/4		CL			1		5		
5	Sand: fn 5YR6/6, p grad		SP							▽
						2		10		
10	Sand: crs-med, 5YR4/6 w. grd, w. rdd.		SW							
						3		15		
15	Sand: med-crs, w. grd, 5YR4/6		SW							
						4		20		
20	Sand: med-crs, w. rdd w. grd 5YR4/6		SW							
						5		25		
25	Bedrock: 26'					6		27		09:3
	TD 27.0									

EXPLANATION

- ▼ Water Table (24 Hour)
- ▽ Water Table (Time of Boring)
- PID Photoionization Detection (ppm)
- NO. Identifies Sample by Number
- TYPE Sample Collection Method

SPLIT-BARREL; AUGER; ROCK CORE; THIN-WALLED TUBE; CONTINUOUS SAMPLER; NO RECOVERY

DEPTH Depth Top and Bottom of Sample
REC. Actual Length of Recovered Sample in Feet

GRAPHIC LOG LEGEND

CLAY; SILT; SAND; GRAVEL; SILTY CLAY; CLAYEY SILT; DEBRIS FILL; HIGHLY ORGANIC (PEAT); SANDY CLAY; CLAYEY SAND; ____; ____

DATE DRILLED	4/3/03
PAGE	of
DRILLING METHOD	HSA
DRILLED BY	B. Graham
LOGGED BY	J. Poor
EXISTING GRADE ELEVATION (FT. AMSL)	TOC 938.1 Pin 936.1
LOCATION OR GRID COORDINATES	900 N- 550 E

KERR-McGEE CORPORATION
HYDROLOGY DEPARTMENT
MONITORING WELL INSTALLATION DIAGRAM

Protective Pipe
Yes ☐ No ☐
Steel ☐ PVC ☐
Surveying Pin ?
Yes ☐ No ☐

2.0 Ft.

Casing Cap Vent ? Yes ☐ No ☐
Lock ? Yes ☐ No ☐
Weep Hole ? Yes ☐ No ☐
Concrete Pad 3 Ft. x 3 Ft. x 4 Inches

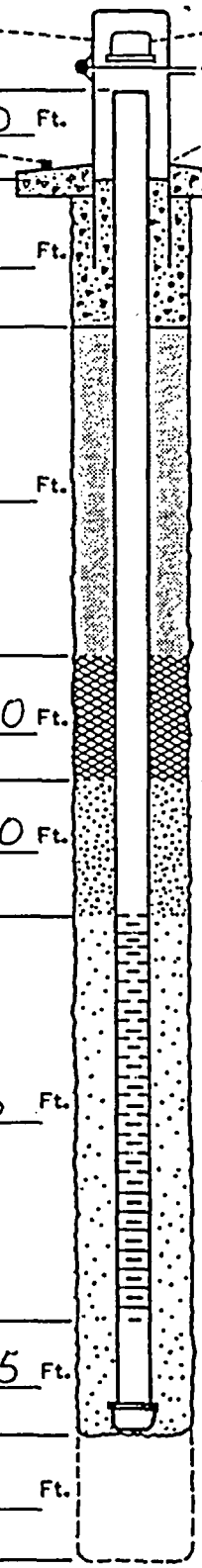

	Ft.	DEPTH BELOW GRADE	DEPTH FROM TOP OF CASING
Concrete			
Cement/Bentonite Grout Mix Yes ☐ No ☐ 5.5 Gallons Water to 94Lb. Bag Cement & 3-5 Lb. Bentonite Powder Other:		2.0	
Bentonite Seal Pellets ☐ Slurry ☐	3.0	5.0	
Filter Pack Above Screen	2.0	7.0	
FILTER PACK MATERIAL Silica Sand ☐ Washed Sand ☐ Pea Gravel ☐ Other: Sand Size	20	26.5	
Dense Phase Sampling Cup Bottom Plug Yes ☐ No ☐	0.5	27.0	
Overdrilled Material Backfill Grout ☐ Sand ☐ Caved Material ☐ Other:			

DRILLING INFORMATION:

1. Borehole Diameter= 8 3/4 Inches.
2. Were Drilling Additives Used ? Yes ☐ No ☒
   Revert ☐ Bentonite ☐ Water ☐
   Solid Auger ☐ Hollow Stem Auger ☐
3. Was Outer Steel Casing Used ? Yes ☐ No ☒
   Depth= _____ to _____ Feet.
4. Borehole Diameter for Outer Casing _____ Inches.

WELL CONSTRUCTION INFORMATION:

1. Type of Casing: PVC ☒ Galvanized ☐ Teflon ☐
   Stainless ☐ Other _____
2. Type of Casing Joints: Screw-Couple ☒ Glue-Couple ☐ Other _____
3. Type of Well Screen: PVC ☒ Galvanized ☐
   Stainless ☐ Teflon ☐ Other _____
4. Diameter of Casing and Well Screen:
   Casing 2 Inches, Screen 2 Inches.
5. Slot Size of Screen: 10
6. Type of Screen Perforation: Factory Slotted ☒
   Hacksaw ☐ Drilled ☐ Other _____
7. Installed Protector Pipe w/Lock: Yes ☒ No ☐

WELL DEVELOPMENT INFORMATION:

1. How was Well Developed ? Bailing ☐ Pumping ☐
   Air Surging (Air or Nitrogen) ☒ Other _____
2. Time Spent on Well Development ?
   _____ / 1 Minutes/Hours
3. Approximate Water Volume Removed ? 240 Gallons
4. Water Clarity Before Development ? Clear ☐
   Turbid ☒ Opaque ☐
5. Water Clarity After Development ? Clear ☒
   Turbid ☐ Opaque ☐
6. Did Water have Odor ? Yes ☐ No ☒
   If Yes, Describe _____
7. Did Water have any Color ? Yes ☐ No ☒
   If Yes, Describe _____

WATER LEVEL INFORMATION:

Water Level Summary (From Top of Casing)

During Drilling 6.0 Ft. Date 4/3/03
Before Development 5.32 gl Ft. Date 4/3/03
After Development _____ Ft. Date _____

Driller/Firm AEI Drill Rig Type Failing F-10 Date Installed 4/3/03
Drill Crew Graham / Foster Well No. T60 Kerr-McGee Hydrologist J. Poor

SOIL BORING LOG KM-5655-A

KERR-McGEE CORPORATION Hydrology Dept. Engineering Services	KM SUBSIDIARY Cimarron	LOCATION 900N 650E	BORING NUMBER T 61

DEPTH IN FEET	LITHOLOGIC DESCRIPTION	GRAPHIC LOG	UNIFIED SOIL FIELD CLASS.	BLOWS PER FOOT	PID (ppm)	SOIL SAMPLE NO.	TYPE	DEPTH	REC.	REMARKS OR FIELD OBSERVATIONS
	Silt: fn sand, 5YR4/4 dry		MH							09:5
	Clay: silty, 5YR4/4		CH							
5	Sand: fn, 5YR6/4 w. srt, p. grd w. rdd		SM					5		wl 6.0 ▽
10	Sand: crs, w rdd, p. grd 5YR5/6		SP					10		
15	Sand: med-crs, w. rdd 5YR5/6		SW					15		
20	Sand: med-crs		SW					20		
25	Bedrock 24.0; clay w/SS							25		
	TD 25.0									10:15

EXPLANATION

- ▼ Water Table (24 Hour)
- ▽ Water Table (Time of Boring)
- PID Photoionization Detection (ppm)
- NO. Identifies Sample by Number
- TYPE Sample Collection Method

SPLIT-BARREL | AUGER | ROCK CORE | THIN-WALLED TUBE | CONTINUOUS SAMPLER | NO RECOVERY

DEPTH. Depth Top and Bottom of Sample
REC. Actual Length of Recovered Sample in Feet

GRAPHIC LOG LEGEND

CLAY | DEBRIS FILL | SILT | HIGHLY ORGANIC (PEAT) | SAND | SANDY CLAY | GRAVEL | CLAYEY SAND | SILTY CLAY | CLAYEY SILT

DATE DRILLED 4/3/03	PAGE of
DRILLING METHOD HSA	
DRILLED BY AEI	
LOGGED BY J. Poor	
EXISTING GRADE ELEVATION (FT. AMSL)	
LOCATION OR GRID COORDINATES 900 N - 650 E	

KERR-McGEE CORPORATION
HYDROLOGY DEPARTMENT
MONITORING WELL INSTALLATION DIAGRAM

Protective Pipe
Yes ☐ No ☐
Steel ☐ PVC ☐
Surveying Pin ?
Yes ☐ No ☐

Casing Cap Vent ? Yes ☐ No ☐
Lock ? Yes ☐ No ☐
Weep Hole ? Yes ☐ No ☐
Concrete Pad 3 Ft. x 3 Ft. x 4 Inches

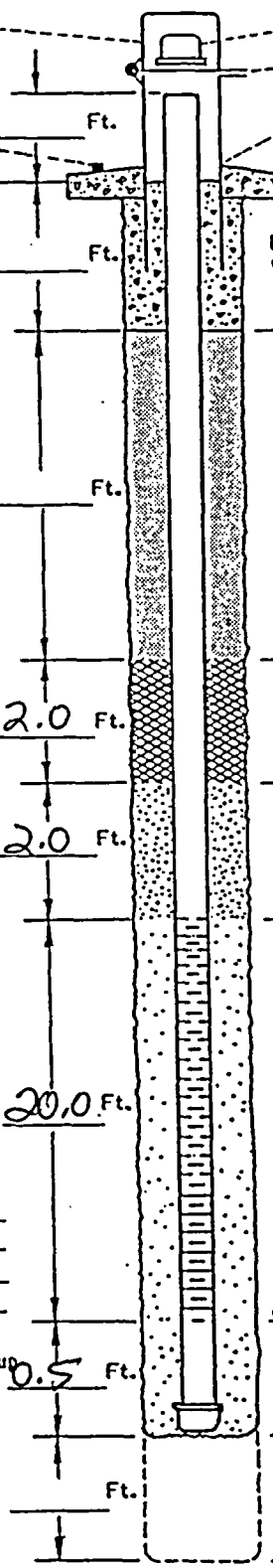

	Ft.	DEPTH BELOW GRADE	DEPTH FROM TOP OF CASING
Concrete			
Cement/Bentonite Grout Mix Yes ☐ No ☐ 5.5 Gallons Water to 94Lb. Bag Cement & 3-5 Lb. Bentonite Powder Other:		1.0	
Bentonite Seal Pellets ☐ Slurry ☐	2.0	3.0	
Filter Pack Above Screen	2.0	5.0	
FILTER PACK MATERIAL Silica Sand ☑ Washed Sand ☐ Pea Gravel ☐ Other: Sand Size 10/20	20.0	24.5	
Dense Phase Sampling Cup Bottom Plug Yes ☐ No ☐	0.5	25.0	
Overdrilled Material Backfill Grout ☐ Sand ☐ Caved Material ☐ Other:			

DRILLING INFORMATION:

1. Borehole Diameter= 6 3/4 Inches.
2. Were Drilling Additives Used ? Yes ☐ No ☒
   Revert ☐ Bentonite ☐ Water ☐
   Solid Auger ☐ Hollow Stem Auger ☐
3. Was Outer Steel Casing Used ? Yes ☐ No ☒
   Depth= _____ to _____ Feet.
4. Borehole Diameter for Outer Casing _____ Inches.

WELL CONSTRUCTION INFORMATION:

1. Type of Casing: PVC ☒ Galvanized ☐ Teflon ☐
   Stainless ☐ Other _____
2. Type of Casing Joints: Screw-Couple ☒ Glue-Couple ☐ Other _____
3. Type of Well Screen: PVC ☒ Galvanized ☐
   Stainless ☐ Teflon ☐ Other _____
4. Diameter of Casing and Well Screen:
   Casing 2 Inches, Screen 2 Inches.
5. Slot Size of Screen: 0.01
6. Type of Screen Perforation: Factory Slotted ☒
   Hacksaw ☐ Drilled ☐ Other _____
7. Installed Protector Pipe w/Lock: Yes ☐ No ☐

WELL DEVELOPMENT INFORMATION:

1. How was Well Developed ? Bailing ☐ Pumping ☐
   Air Surging (Air or Nitrogen) ☐ Other _____
2. Time Spent on Well Development ?
   _____ 2 Minutes/Hours
3. Approximate Water Volume Removed ? 420 Gallons
4. Water Clarity Before Development ? Clear ☐
   Turbid ☐ Opaque ☐
5. Water Clarity After Development ? Clear ☐
   Turbid ☐ Opaque ☐
6. Did Water have Odor ? Yes ☐ No ☐
   If Yes, Describe _____
7. Did Water have any Color ? Yes ☐ No ☐
   If Yes, Describe _____

WATER LEVEL INFORMATION:

Water Level Summary (From Top of Casing)

During Drilling 6.0 Ft. Date 4/3/03
Before Development 5.45 Ft. Date 4/4/03
After Development _____ Ft. Date _____

Driller/Firm AEI Drill Rig Type Failing Date Installed 4/3/03
Drill Crew B. Graham / S. Foster Well No. T-61 Kerr-McGee Hydrologist J. Poor

SOIL BORING LOG KM-5655-A

KERR-McGEE CORPORATION Hydrology Dept. Engineering Services	KM SUBSIDIARY Cimarron	LOCATION Alluvial- Area H	BORING NUMBER T62

DEPTH IN FEET	LITHOLOGIC DESCRIPTION	GRAPHIC LOG	UNIFIED SOIL FIELD CLASS.	BLOWS PER FOOT	PID (ppm)	SOIL SAMPLE NO.	TYPE	DEPTH	REC.	REMARKS OR FIELD OBSERVATIONS
	Clay: moist, 2.5yR 3/3 silty, low plastic, cohesive, lean		CL							180' west of T63 10:45 Soil described off augers
5								5		
			CL							▽
10	Sand: vfn, wsrt, p.grd 2.5yR 5/8, saturated		SP-SM					10		
15	Sand: crs-med w.grd, clean, rdd-sub rdd, 2.5yR 5/6		SW					15		
	Bedrock 18.2', sandstone p.srt, w.grd, rdd hard w. cemented									hard drilling: Lifts rig
20	TD. 20.0'							20		set well to 20'

EXPLANATION

- ▼ Water Table (24 Hour)
- ▽ Water Table (Time of Boring)
- PID Photoionization Detection (ppm)
- NO. Identifies Sample by Number
- TYPE Sample Collection Method

SPLIT-BARREL | AUGER | ROCK CORE | THIN-WALLED TUBE | CONTINUOUS SAMPLER | NO RECOVERY

- DEPTH Depth Top and Bottom of Sample
- REC. Actual Length of Recovered Sample in Feet

GRAPHIC LOG LEGEND

CLAY | DEBRIS FILL | SILT | Shale/Mudstone | SAND | SANDY CLAY | GRAVEL | CLAYEY SAND | SILTY CLAY | ____ | CLAYEY SILT | ____

DATE DRILLED	PAGE
7/7/03	1 of 1

DRILLING METHOD: HSA

DRILLED BY: D. Jarman - AEI

LOGGED BY: Jami Poor

EXISTING GRADE ELEVATION (FT. AMSL)

LOCATION OR GRID COORDINATES

KERR-McGEE CORPORATION
HYDROLOGY DEPARTMENT
MONITORING WELL INSTALLATION DIAGRAM

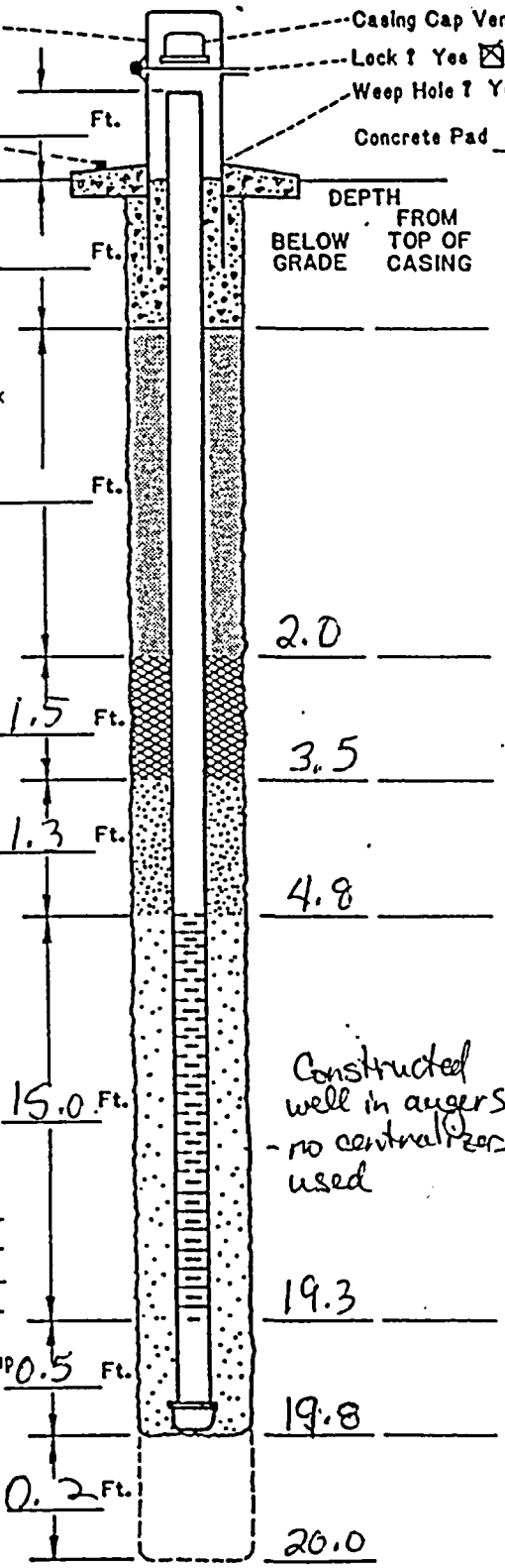

Protective Pipe
Yes ☒ No ☐
Steel ☐ PVC ☐
Surveying Pin ? Yes ☒ No ☐

Ft.

Concrete Ft.

Cement/Bentonite Grout Mix
Yes ☒ No ☐
5.5 Gallons Water to 94Lb. Bag Cement & 3-5 Lb. Bentonite Powder
Ft.
Other: _____

Bentonite Seal
Pellets ☒ Slurry ☐
1.5 Ft.

Filter Pack Above Screen
1.3 Ft.

FILTER PACK MATERIAL
Silica Sand ☒
Washed Sand ☐
15.0 Ft.
Pea Gravel ☐
Other: _____
Sand Size 10-20

Dense Phase Sampling Cup 0.5 Ft.
Bottom Plug
Yes ☐ No ☐

Overdrilled Material Backfill
0.2 Ft.
Grout ☐ Sand ☒
Caved Material ☐
Other: _____

Casing Cap Vent ? Yes ☐ No ☒
Lock ? Yes ☒ No ☐
Weep Hole ? Yes ☐ No ☒
Concrete Pad 3 Ft. x 3 Ft. x 3 Inches

Constructed well in augers - no central pipes used

DRILLING INFORMATION:
1. Borehole Diameter= 8 3/4 Inches.
2. Were Drilling Additives Used ? Yes ☐ No ☒
   Revert ☐ Bentonite ☐ Water ☐
   Solid Auger ☐ Hollow Stem Auger ☒
3. Was Outer PVC Casing Used ? Yes ☐ No ☒
   Depth= _____ to _____ Feet.
4. Borehole Diameter for Outer Casing NA Inches.

WELL CONSTRUCTION INFORMATION:
1. Type of Casing: PVC ☒ Galvanized ☐ Teflon ☐
   Stainless ☐ Other _____
2. Type of Casing Joints: Screw-Couple ☒ Glue-Couple ☐ Other _____
3. Type of Well Screen: PVC ☒ Galvanized ☐
   Stainless ☐ Teflon ☐ Other _____
4. Diameter of Casing and Well Screen:
   Casing 2 Inches, Screen 2 Inches.
5. Slot Size of Screen: 0.010
6. Type of Screen Perforation: Factory Slotted ☒
   Hacksaw ☐ Drilled ☐ Other _____
7. Installed Protector Pipe w/Lock: Yes ☒ No ☐

WELL DEVELOPMENT INFORMATION:
1. How was Well Developed ? Bailing ☐ Pumping ☐
   Air Surging (Air or Nitrogen) ☒ Other _____
2. Time Spent on Well Development ? 2 hrs, 15 min Minutes/Hours
3. Approximate Water Volume Removed ? 340 Gallons
4. Water Clarity Before Development ? Clear ☐
   Turbid ☒ Opaque ☐
5. Water Clarity After Development ? Clear ☒
   Turbid ☐ Opaque ☐
6. Did Water have Odor ? Yes ☐ No ☒
   If Yes, Describe _____
7. Did Water have any Color ? Yes ☒ No ☐
   If Yes, Describe _____

WATER LEVEL INFORMATION:
Water Level Summary (From Top of Casing)

During Drilling _____ Ft. Date _____
Before Development _____ Ft. Date _____
After Development _____ Ft. Date _____

Driller/Firm AEI
Drill Rig Type Failing F10
Date Installed 7/7/03
Drill Crew D. Jarman
Well No. T62
Kerr-McGee Hydrologist J. Poor

SOIL BORING LOG KM-5655-A

KERR-McGEE CORPORATION Hydrology Dept. Engineering Services	KM SUBSIDIARY Cimarron	LOCATION Alluvial - Area H	BORING NUMBER T63

DEPTH IN FEET	LITHOLOGIC DESCRIPTION	GRAPHIC LOG	UNIFIED SOIL FIELD CLASS.	BLOWS PER FOOT	PID (ppm)	SOIL SAMPLE NO.	TYPE	DEPTH	REC.	REMARKS OR FIELD OBSERVATIONS
	Clay: moist 2.5YR4/4		CL							Soil described off augers 13:2
	Sand: v.fn, p grd, 2.5YR6/6		SP-SM					5		
5	Sand: vfn, slty, 2.5YR5/6 p-grd									
10	Sand: vfn, slty, moist 2.5YR5/4		SP-SM					10		water 12.0' ▽
15	Sand: vfn, saturated							15		
	Sand: med-crs, w.rdd p. srt, w.grd		SW							
20	Sand: 2.5YR5/6							20		
	Bedrock 23.5 sandstone									13:50
25	TD 23.8									

EXPLANATION

- ▼ Water Table (24 Hour)
- ▽ Water Table (Time of Boring)
- PID Photoionization Detection (ppm)
- NO. Identifies Sample by Number
- TYPE Sample Collection Method

SPLIT-BARREL | AUGER | ROCK CORE | THIN-WALLED TUBE | CONTINUOUS SAMPLER | NO RECOVERY

DEPTH Depth Top and Bottom of Sample
REC. Actual Length of Recovered Sample in Feet

GRAPHIC LOG LEGEND

CLAY | DEBRIS FILL | SILT | Shale/Mudstone | SAND | SANDY CLAY | GRAVEL | CLAYEY SAND | SILTY CLAY | CLAYEY SILT

DATE DRILLED	PAGE
7/7/03	1 of 1

DRILLING METHOD: Auger

DRILLED BY: D. Jarman - AEI

LOGGED BY: Jami Poor

EXISTING GRADE ELEVATION (FT. AMSL)

LOCATION OR GRID COORDINATES

KERR-McGEE CORPORATION
HYDROLOGY DEPARTMENT
MONITORING WELL INSTALLATION DIAGRAM

Protective Pipe
Yes ☒ No ☐
Steel ☐ PVC ☐
Surveying Pin ?
Yes ☒ No ☐

Casing Cap Vent ? Yes ☐ No ☒
Lock ? Yes ☒ No ☐
Weep Hole ? Yes ☐ No ☒
Concrete Pad 3 Ft. x 3 Ft. x 3 Inches

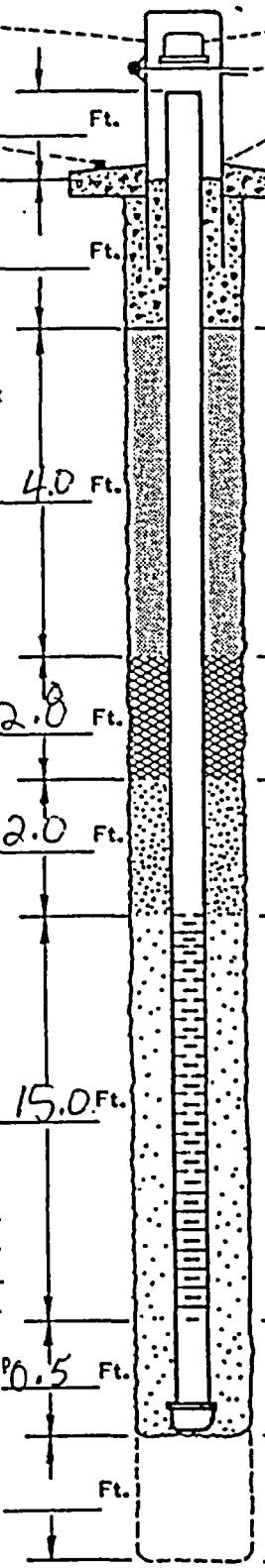

	Ft.	Depth Below Grade	Depth From Top of Casing
	Ft.		
Cement/Bentonite Grout Mix (Yes ☒ No ☐; 5.5 Gallons Water to 94Lb. Bag Cement & 3-5 Lb. Bentonite Powder)	4.0 Ft.	4.0	
Bentonite Seal (Pellets ☐ Slurry ☐)	2.8 Ft.	6.8	
Filter Pack Above Screen	2.0 Ft.	8.8	
FILTER PACK MATERIAL (Silica Sand ☒; Washed Sand ☐; Pea Gravel ☐; Sand Size 10-20)	15.0 Ft.	23.3	
Dense Phase Sampling Cup (Bottom Plug Yes ☐ No ☐)	0.5 Ft.	23.8	
Overdrilled Material Backfill (Grout ☐ Sand ☐; Caved Material ☐)	Ft.		

Other: _____

Constructed well in augers - no centralizers used

DRILLING INFORMATION:

1. Borehole Diameter= 8 3/4 Inches.
2. Were Drilling Additives Used ? Yes ☐ No ☒
   Revert ☐ Bentonite ☐ Water ☐
   Solid Auger ☐ Hollow Stem Auger ☒
3. Was Outer PVC Casing Used ? Yes ☐ No ☒
   Depth= _____ to _____ Feet.
4. Borehole Diameter for Outer Casing _____ Inches.

WELL CONSTRUCTION INFORMATION:

1. Type of Casing: PVC ☒ Galvanized ☐ Teflon ☐
   Stainless ☐ Other _____
2. Type of Casing Joints: Screw-Couple ☒ Glue-Couple ☐ Other _____
3. Type of Well Screen: PVC ☒ Galvanized ☐
   Stainless ☐ Teflon ☐ Other _____
4. Diameter of Casing and Well Screen:
   Casing 2 Inches, Screen 2 Inches.
5. Slot Size of Screen: 0.010
6. Type of Screen Perforation: Factory Slotted ☒
   Hacksaw ☐ Drilled ☐ Other _____
7. Installed Protector Pipe w/Lock: Yes ☒ No ☐

WELL DEVELOPMENT INFORMATION:

1. How was Well Developed ? Bailing ☐ Pumping ☐
   Air Surging (Air or Nitrogen) ☒ Other _____
2. Time Spent on Well Development ?
   1 hr 50 Minutes/Hours
3. Approximate Water Volume Removed ? 532 Gallons
4. Water Clarity Before Development ? Clear ☐
   Turbid ☒ Opaque ☐
5. Water Clarity After Development ? Clear ☒
   Turbid ☐ Opaque ☐
6. Did Water have Odor ? Yes ☐ No ☒
   If Yes, Describe _____
7. Did Water have any Color ? Yes ☒ No ☐
   If Yes, Describe _____

WATER LEVEL INFORMATION:

Water Level Summary (From Top of Casing)

During Drilling _____ Ft. Date _____
Before Development _____ Ft. Date _____
After Development _____ Ft. Date _____

Driller/Firm AEI
Drill Rig Type Failing F10
Date Installed 7/7/03
Drill Crew D. Jarman
Well No. T63
Kerr-McGee Hydrologist J. Poor

SOIL BORING LOG KM—5655-A

KERR-McGEE CORPORATION Hydrology Dept. Engineering Services	KM SUBSIDIARY Cimarron	LOCATION Alluvial - Area H	BORING NUMBER T64

DEPTH IN FEET	LITHOLOGIC DESCRIPTION	GRAPHIC LOG	UNIFIED SOIL FIELD CLASS.	BLOWS PER FOOT	PID (ppm)	SOIL SAMPLE NO.	TYPE	DEPTH	REC.	REMARKS OR FIELD OBSERVATIONS
	Silty sand: vfn 2.5YR 5/8		SM-SP							14:05
5	Silty sand: vfn, moist		SM-SP					5.0		
	Sand: 2.5YR 6/8, vfn, silty		SP							▽
10	Sand: wsrt, p.grd, moist,							10.0		
15	Sandy clay: 2.5YR 4/8 subrdd, wsrt, p.grd.		SC					15.0		
	Sand: fn-med, 10YR 6/8 sub ang		SW							14:25
	Bedrock 17.0'									
20	TD 17.50'									

EXPLANATION

- ▼ Water Table (24 Hour)
- ▽ Water Table (Time of Boring)
- PID Photoionization Detection (ppm)
- NO. Identifies Sample by Number
- TYPE Sample Collection Method

SPLIT-BARREL · AUGER · ROCK CORE · THIN-WALLED TUBE · CONTINUOUS SAMPLER · NO RECOVERY

DEPTH Depth Top and Bottom of Sample
REC. Actual Length of Recovered Sample in Feet

GRAPHIC LOG LEGEND

CLAY · DEBRIS FILL · SILT · Shale/Mudstone · SAND · SANDY CLAY · GRAVEL · CLAYEY SAND · SILTY CLAY · CLAYEY SILT

DATE DRILLED	PAGE
7/2/03	1 of 1

DRILLING METHOD: HSA

DRILLED BY: D. Jarman - AEI

LOGGED BY: Jami Poor

EXISTING GRADE ELEVATION (FT. AMSL)

LOCATION OR GRID COORDINATES

KERR-McGEE CORPORATION
HYDROLOGY DEPARTMENT
MONITORING WELL INSTALLATION DIAGRAM

Protective Pipe
Yes ☒ No ☐
Steel ☐ PVC ☐
Surveying Pin ?
Yes ☒ No ☐

Casing Cap Vent ? Yes ☐ No ☒
Lock ? Yes ☒ No ☐
Weep Hole ? Yes ☐ No ☒
Concrete Pad 3 Ft. x 3 Ft. x 3 Inches

Ft.

Concrete Ft.

Cement/Bentonite Grout Mix
Yes ☒ No ☐
5.5 Gallons Water to 94Lb. Bag Cement & 3-5 Lb. Bentonite Powder
Ft.
Other: _____

Bentonite Seal
Pellets ☐ Slurry ☐
2.0 Ft.

Filter Pack Above Screen
2.5 Ft.

FILTER PACK MATERIAL
Silica Sand ☒
Washed Sand ☐
Pea Gravel ☐
10.0 Ft.
Other: _____
Sand Size 10-20

Dense Phase Sampling Cup
Bottom Plug
Yes ☐ No ☐
0.5 Ft.

Overdrilled Material Backfill
Grout ☐ Sand ☐
Caved Material ☐
Ft.
Other: _____

DEPTH FROM BELOW GRADE	DEPTH FROM TOP OF CASING
3.0	
5.0	
7.5	
17.0	
17.5	

well constructed in augers
No centralizer used.

DRILLING INFORMATION:

1. Borehole Diameter= 8 3/4 Inches.
2. Were Drilling Additives Used ? Yes ☐ No ☒
   Revert ☐ Bentonite ☐ Water ☐
   Solid Auger ☐ Hollow Stem Auger ☒
3. Was Outer PVC Casing Used ? Yes ☐ No ☒
   Depth= _____ to _____ Feet.
4. Borehole Diameter for Outer Casing NA Inches.

WELL CONSTRUCTION INFORMATION:

1. Type of Casing: PVC ☒ Galvanized ☐ Teflon ☐
   Stainless ☐ Other _____
2. Type of Casing Joints: Screw-Couple ☒ Glue-Couple ☐ Other _____
3. Type of Well Screen: PVC ☒ Galvanized ☐
   Stainless ☐ Teflon ☐ Other _____
4. Diameter of Casing and Well Screen:
   Casing 2 Inches, Screen 2 Inches.
5. Slot Size of Screen: 0.010
6. Type of Screen Perforation: Factory Slotted ☒
   Hacksaw ☐ Drilled ☐ Other _____
7. Installed Protector Pipe w/Lock: Yes ☒ No ☐

WELL DEVELOPMENT INFORMATION:

1. How was Well Developed ? Bailing ☐ Pumping ☐
   Air Surging (Air or Nitrogen) ☒ Other _____
2. Time Spent on Well Development ?
   1 hr / 10 min Minutes/Hours
3. Approximate Water Volume Removed ? 70 Gallons
4. Water Clarity Before Development ? Clear ☐
   Turbid ☒ Opaque ☐
5. Water Clarity After Development ? Clear ☒
   Turbid ☐ Opaque ☐
6. Did Water have Odor ? Yes ☐ No ☒
   If Yes, Describe _____
7. Did Water have any Color ? Yes ☒ No ☐
   If Yes, Describe _____

WATER LEVEL INFORMATION:

Water Level Summary (From Top of Casing)

During Drilling _____ Ft. Date _____
Before Development _____ Ft. Date _____
After Development _____ Ft. Date _____

Driller/Firm AEI
Drill Rig Type Failing F10
Date Installed 7/21/03
Drill Crew D. Jarman
Well No. T64
Kerr-McGee Hydrologist J. Poor

SOIL BORING LOG KM—5655-A

KERR-McGEE CORPORATION Hydrology Dept. Engineering Services	KM SUBSIDIARY Cimarron	LOCATION Alluvial-Area H	BORING NUMBER T65

DEPTH IN FEET	LITHOLOGIC DESCRIPTION	GRAPHIC LOG	UNIFIED SOIL FIELD CLASS.	BLOWS PER FOOT	PID (ppm)	SOIL SAMPLE NO.	TYPE	DEPTH	REC.	REMARKS OR FIELD OBSERVATIONS
	Silt: 2.5YR5/8		ML							07:45
								5.0		
5	Sand: vfn, p.grd		SP							
	Clay: moist, low-med plastic, 5YR4/6		CL							
	Sand: 5YR5/8, p.grd		SP					10.0		wl ▽
10	Sand: vfn-fn, 5YR5/6, w. srt, p.grd.		SP							
	15% 80% 5%							15.0		
15	Sand: fn-med-crs, w.grd. 5YR5/6		SW							
								20.0		
20	Sand: crs, sub rdd : med-crs, p.srt, w. grd, 5YR5/6		SW							
	Bedrock: 23.5'									08:35
	TD 23.5									

EXPLANATION

- ▼ Water Table (24 Hour)
- ▽ Water Table (Time of Boring)
- PID Photoionization Detection (ppm)
- NO. Identifies Sample by Number
- TYPE Sample Collection Method

SPLIT-BARREL · AUGER · ROCK CORE · THIN-WALLED TUBE · CONTINUOUS SAMPLER · NO RECOVERY

DEPTH Depth Top and Bottom of Sample
REC. Actual Length of Recovered Sample in Feet

GRAPHIC LOG LEGEND

CLAY · SILT · SAND · GRAVEL · SILTY CLAY · CLAYEY SILT · DEBRIS FILL · Shale/Mudstone · SANDY CLAY · CLAYEY SAND · ____ · ____

DATE DRILLED	PAGE
7/22/03	1 of 1

DRILLING METHOD: HSA

DRILLED BY: D. Jarman - AEI

LOGGED BY: Jami Poor

EXISTING GRADE ELEVATION (FT. AMSL)

LOCATION OR GRID COORDINATES

KERR-McGEE CORPORATION
HYDROLOGY DEPARTMENT
MONITORING WELL INSTALLATION DIAGRAM

Protective Pipe
Yes ☒ No ☐
Steel ☐ PVC ☐
Surveying Pin ?
Yes ☒ No ☐

Casing Cap Vent ? Yes ☐ No ☒
Lock ? Yes ☒ No ☐
Weep Hole ? Yes ☐ No ☒
Concrete Pad 3 Ft. x 3 Ft. x 3 Inches

Ft.

Concrete Ft.

Cement/Bentonite Grout Mix
Yes ☒ No ☐
5.5 Gallons Water to 94Lb. Bag Cement & 3-5 Lb. Bentonite Powder
Other:

Ft.

Bentonite Seal
Pellets ☒ Slurry ☐
3.5 Ft.

Filter Pack Above Screen
1.5 Ft.

FILTER PACK MATERIAL
Silica Sand ☒
Washed Sand ☐
Pea Gravel ☐
Other:
Sand Size 10-20
15.0 Ft.

Dense Phase Sampling Cup
Bottom Plug
Yes ☐ No ☐
0.5 Ft.

Overdrilled Material Backfill
Grout ☐ Sand ☐
Caved Material ☐
Other:
Ft.

DEPTH BELOW GRADE	DEPTH FROM TOP OF CASING
2.5	
6.0	
7.5	
22.0	
22.5	
23.5	

well constructed in augers - no centralizer used.

DRILLING INFORMATION:

1. Borehole Diameter= 8 3/4 Inches.
2. Were Drilling Additives Used ? Yes ☐ No ☒
   Revert ☐ Bentonite ☐ Water ☐
   Solid Auger ☐ Hollow Stem Auger ☒
3. Was Outer PVC Casing Used ? Yes ☐ No ☒
   Depth= _____ to _____ Feet.
4. Borehole Diameter for Outer Casing NA Inches.

WELL CONSTRUCTION INFORMATION:

1. Type of Casing: PVC ☒ Galvanized ☐ Teflon ☐
   Stainless ☐ Other
2. Type of Casing Joints: Screw-Couple ☒ Glue-Couple ☐ Other
3. Type of Well Screen: PVC ☒ Galvanized ☐
   Stainless ☐ Teflon ☐ Other
4. Diameter of Casing and Well Screen:
   Casing 2 Inches, Screen 2 Inches.
5. Slot Size of Screen: 0.010
6. Type of Screen Perforation: Factory Slotted ☒
   Hacksaw ☐ Drilled ☐ Other
7. Installed Protector Pipe w/Lock: Yes ☒ No ☐

WELL DEVELOPMENT INFORMATION:

1. How was Well Developed ? Bailing ☐ Pumping ☐
   Air Surging (Air or Nitrogen) ☒ Other
2. Time Spent on Well Development ?
   65 min Minutes/Hours
3. Approximate Water Volume Removed ? 280 Gallons
4. Water Clarity Before Development ? Clear ☐
   Turbid ☒ Opaque ☐
5. Water Clarity After Development ? Clear ☒
   Turbid ☐ Opaque ☐
6. Did Water have Odor ? Yes ☐ No ☒
   If Yes, Describe
7. Did Water have any Color ? Yes ☒ No ☐
   If Yes, Describe

WATER LEVEL INFORMATION:

Water Level Summary (From Top of Casing)

During Drilling _____ Ft. Date _____
Before Development _____ Ft. Date _____
After Development _____ Ft. Date _____

Driller/Firm AEI
Drill Rig Type Failing F10
Date Installed 7/22/03
Drill Crew D. Jarman
Well No. T65
Kerr-McGee Hydrologist J. Poor

ATTACHMENT B

THIS PAGE IS AN OVERSIZED DRAWING OR FIGURE,

THAT CAN BE VIEWED AT THE RECORD TITLED:

"U-PONDS #1 AND #2 AREAS TOPOGRAPHIC CONTOURS"

WITHIN THIS PACKAGE.

D-01

ATTACHMENT C

ATTACHMENT D

Table 1. Summary of New Well Construction Details - Tc-99 Groundwater Assessment

Table Reference Number	Monitoring Well Identification	Date Completed	Designated Monitoring Zone	Well Diameter Inches	Casing Type	Diameter of Boring	Well Depth Feet BGS	Screened Interval Feet BGS	Length of Screened Interval	Top-of-Casing Elevation Feet MSL	Well Casing Stick Up Length Feet AGS	Ground Surface Elevation Feet MSL	Drilling Comments
1	T51	3-Apr-03	Alluvium	2	PVC	8.75 Inches	20	5 to 20	15 Feet	940.5	2.6	937.9	Saturated Zone is Mostly Sand
2	T52	2-Apr-03	Alluvium	2	PVC	8.75 Inches	27.5	16.5 to 27.5	15 Feet	939.2	2.1	937.1	Saturated Zone is Mostly Sand
3	T53	3-Apr-03	Alluvium	2	PVC	8.75 Inches	27	12 to 27	15 Feet	938 0	2.2	935.8	Saturated Zone is Mostly Sand
4	T54	3-Apr-03	Alluvium	2	PVC	8.75 Inches	16	6 to 16	10 Feet	940.4	2.7	937.7	Saturated Zone is Mostly Sand
5	T55	2-Apr-03	Alluvium	2	PVC	8.75 Inches	16	6 to 16	10 Feet	938.8	2.5	936.3	Saturated Zone is Mostly Sand
6	T56	2-Apr-03	Alluvium	2	PVC	8.75 Inches	15	5 to 15	10 Feet	938.1	2.2	935.9	Saturated Zone is Mostly Sand
7	T57	2-Apr-03	Alluvium	2	PVC	8.75 Inches	19	4 to 19	15 Feet	939.6	2.1	937.4	Saturated Zone is Mostly Sand
8	T58	2-Apr-03	Alluvium	2	PVC	8.75 Inches	20	5 to 20	15 Feet	939.5	2.2	937.3	Saturated Zone is Mostly Sand
9	T59	2-Apr-03	Alluvium	2	PVC	8.75 Inches	27	7 to 27	10 Feet	938.3	2.1	936.2	Saturated Zone is Mostly Sand
10	T60	2-Apr-03	Alluvium	2	PVC	8.75 Inches	27	7 to 27	20 Feet	938.1	2.0	936.1	Saturated Zone is Mostly Sand
11	T61	04-Apr-03	Alluvium	2	PVC	8.75 Inches	25	5 to 25	20 Feet	938.7	2.4	936.3	Saturated Zone is Mostly Sand
12	T62	07-Jul-03	Alluvium	2	PVC	8.75 Inches	19.8	4.8 to 19.8	15 Feet	941.4	2.0	939.4	Saturated Zone is Mostly Sand
13	T63	07-Jul-03	Alluvium	2	PVC	8.75 Inches	23.8	8.8 to 23.8	15 Feet	940.8	2.5	938.2	Saturated Zone is Mostly Sand
14	T64	21-Jul-03	Alluvium	2	PVC	8.75 Inches	17.5	7.5 to 17.5	10 Feet	943.8	2.3	941.5	Saturated Zone is Mostly Sand
15	T65	22-Jul-03	Alluvium	2	PVC	8.75 Inches	22.5	7.5 to 22.5	15 Feet	941.3	2.3	939.0	Saturated Zone is Mostly Sand
.....	.....	.....	.....	.....	.....	.....	.....	.....	.....	.....	.....	.....	.....
1	1347	9-Apr-03	Sandstone A	2	PVC	6.75 Inches	39.5	24.5 to 39.5	15 Feet	996.7	1.9	994.8	Interbedded Sandstone & Shale
.....	.....	.....	.....	.....	.....	.....	.....	.....	.....	.....	.....	.....	.....
1	1345	8-Apr-03	Sandstone B	2	PVC	6.75 Inches 10.75 Inches (double cased well)	60	45 to 60	15 Feet	989.1	2.0	987.1	Interbedded Sandstone & Shale
2	1346	9-Apr-03	Sandstone B	2	PVC	6.75 Inches 10.75 Inches (double cased well)	60	45 to 60	15 Feet	991.9	2.2	989.6	Interbedded Sandstone & Shale

Notes:

Table data collected from field drilling and monitoring well installation logs

Alluvial Aquifer monitoring wells installed using Hollow-Stem Auger drilling method in un-consolidated alluvial deposits.

Sandstone B monitoring wells installed using Double-Cased Air Rotary drilling method in consolidated bedrock.

Feet BGS = Feet Below Ground Surface

Feet AGS = Feet Above Ground Surface (for wells with "stick-up" surface completion)

MSL = Mean Sea Level

Chase Environmental Group, Inc.
Draft - Updated October 10, 2003

Table 2. Summary of Measured Monitoring Well Groundwater Elevations - Tc-99 Groundwater Assessment

Designated Monitoring Zone	Monitoring Well Identification	Date Measured	Groundwater Elevation Feet MSL	Total Depth Of Well Feet BGS	Amount of Water In Well Feet	Top-of-Casing Elevation Feet MSL	Height of Well Stick-Up Feet	Approximate Ground Surface Elevation Feet MSL	Measured Depth To Groundwater Feet
U-Pond #1 Upland Assessment Area - Sandstone A (1311, 1312, 1313, 1340)					- - - - - - - - - - Supplemental Groundwater Elevation Data - - - - - - - -				
	1311	09/16/03	965.5	42.69	11.89	996.28	1.55	994.73	30.80
	1312	09/16/03	953.6	*39.24*	*Note: Dry Well*	992.84	2.74	990.10	*39.24*
	1313	09/16/03	963.6	40.50	8.78	995.32	2.50	992.82	31.72
	1340	09/16/03	961.5	33.88	10.35	985.02	2.48	982.54	23.53
U-Pond #1 Upland Assessment Area - Sandstone B (1341, 1345)									
	1341	09/16/03	936.8	66.55	18.32	984.98	2.70	982.28	48.23
	1345	09/16/03	933.7	68.36	13.00	989.10	2.03	987.07	55.36
U-Pond #1 Alluvial Assessment Area at Base of Bluffs (T-57, T-58, T-62, T-63, T-64, T-65)									
	T-57	09/16/03	929.8	21.13	11.39	939.57	2.14	937.43	9.74
	T-58	09/16/03	929.9	22.45	12.86	939.46	2.18	937.28	9.59
	T-62	09/16/03	929.8	22.28	10.72	941.40	1.98	939.42	11.56
	T-63	09/16/03	930.0	26.46	15.73	940.75	2.51	938.24	10.73
	T-64	09/16/03	930.3	20.16	6.67	943.80	2.33	941.47	13.49
	T-65	09/16/03	930.1	25.03	13.83	941.26	2.26	939.00	11.20
U-Pond #1 Down-Gradient Alluvial Assessment Area (T-51, T-52, T-53)									
	T-51	09/16/03	929.3	21.59	10.32	940.53	2.49	938.04	11.27
	T-52	09/16/03	929.1	29.58	19.46	939.19	2.07	937.12	10.12
	T-53	09/16/03	929.1	28.38	18.64	938.83	2.21	936.62	9.74
U-Pond #2 Upland Assessment Area - Sandstone A (1336A, 1337, 1347)									
	1336A	09/16/03	959.7	34.46	5.46	988.65	0.00	988 65	29.00
	1337	09/16/03	965.9	37.58	8.58	994.90	3.20	991.70	29.00
	1347	09/16/03	965.1	42.02	10.43	996.72	1.89	994.83	31.59
U-Pond #2 Upland Assessment Area - Sandstone B (1338, 1346)									
	1338	09/16/03	943.7	62.76	11.77	994.70	3.40	991.30	50.99
	1346	09/16/03	937.6	61.61	7.34	991.87	2.23	989.64	54.27
U-Pond #2 Alluvial Assessment Area at Base of Bluffs (T-54, T-55, T-56)									
	T-54	09/16/03	929.7	17.27	6.50	940 42	2.72	937.70	10.77
	T-55	09/16/03	929.3	18.12	8 61	938.81	2.48	936.33	9.51
	T-56	09/16/03	929.2	17.21	8.33	938.09	2.17	935.92	8.88
U-Pond #2 Down-Gradient Alluvial Assessment Area (T-53, T-59, T-60, T-61, 1343)									
	T-53	09/16/03	929.1	28.38	18.64	938 83	2.21	936.62	9.74
	T-59	09/16/03	928.9	29.53	20.25	938.22	2.03	936.19	9.28
	T-60	09/16/03	928.9	29.77	20.55	938.11	2.00	936.11	9.22
	T-61	09/16/03	928.7	24.14	14.09	938.70	2.39	936.31	10.05
	1343	09/16/03	928.4	25.48	12.00	941.85	1.61	940.24	13.48
U-Pond #2 Seep in Bluff	*Seep #1208 Approximate Elevation - 968 Feet MSL*								

Explanation: BGS = Below Ground Surface MSL = Mean Sea Level

Table 3. Potential Groundwater Hydraulic Gradients in Alluvial Aquifer, Sandstone A, and Sandstone B

Note: Groundwater Elevations Measured September 16, 2003.

Alluvial Aquifer Assessment Area And Well Identification	Groundwater Elevation Feet MSL	Map/Drawing Measured Scale Distance (inches)	Map Scale (feet per inch)	Calculated Distance Between Wells	Calculated Horizontal Hydraulic Gradient
U-Pond Area #1:		8.25	250	2063 feet	
T-57	929.8		Vertical Gradient =	0.7 feet	Hydraulic Gradient: 0.0003 foot/foot
T-52	929.1		Horizontal Distance =	2063 feet	(vertical gradient/horizontal distance)
		(Estimated Distance from Well T-57 to T52)			
U-Pond Area #2		1.5	250	375 feet	
T-56	929.2		Vertical Gradient =	0.3 feet	Hydraulic Gradient: 0.0008 foot/foot
T-59	928.9		Horizontal Distance =	375 feet	(vertical gradient/horizontal distance)
		(Estimated Distance from Well T-56 to T-59)			

Sandstone A: Assessment Area And Well Identification	Groundwater Elevation Feet MSL	Map/Drawing Measured Scale Distance (inches)	Map Scale (feet per inch)	Calculated Distance Between Wells	Calculated Horizontal Hydraulic Gradient
U-Pond Area #1		2.375	250	594 feet	
1311	965.5		Vertical Gradient =	4 feet	Hydraulic Gradient: 0.0067 foot/foot
1340	961.5		Horizontal Distance =	594 feet	(vertical gradient/horizontal distance)
		(Estimated Distance from Well 1311 to 1340)			
U-Pond Area #2		1.9375	250	484 feet	
1320	967.0		Vertical Gradient =	7.3 feet	Hydraulic Gradient: 0.0151 foot/foot
1336A	959.7		Horizontal Distance =	484 feet	(vertical gradient/horizontal distance)
		(Estimated Distance from Well 1320 to 1336A)			

Sandstone B: Assessment Area And Well Identification	Groundwater Elevation Feet MSL	Map/Drawing Measured Scale Distance (inches)	Map Scale (feet per inch)	Calculated Distance Between Wells	Calculated Horizontal Hydraulic Gradient
U-Pond Area#1		0.75	250	188 feet	
1341	936.8		Vertical Gradient =	3.1 feet	Hydraulic Gradient: 0.0165 foot/foot
1345	933.7		Horizontal Distance =	188 feet	(vertical gradient/horizontal distance)
		(Estimated Distance from Well 1341 to 1345)			
U-Pond Area#2		0.75	250	188 feet	
1338	943.7		Vertical Gradient =	6.1 feet	Hydraulic Gradient: 0.0325 foot/foot
1346	937.6		Horizontal Distance =	188 feet	(vertical gradient/horizontal distance)
		(Estimated Distance from Well 1338 to 1346)			

THIS PAGE IS AN OVERSIZED DRAWING OR FIGURE,

THAT CAN BE VIEWED AT THE RECORD TITLED:

"GROUND WATER POTENTIOMETRIC SURFACE SANDSTONE "A" WATER LEVELS 9-16-03"

WITHIN THIS PACKAGE.

D-02

ATTACHMENT E

CIMARRON FACILITY - ENVIRONMENTAL MONITOR WELLS

WELL #: 1311 GRID: 2092480E;321052.976N Elevation: 995.69 WELL DEPTH: 42.83

SOUTH OF WASTE POND 1 SAMPLE DATE	GROSS ALPHA pCi/L	GROSS BETA pCi/L	Tc-99 pCi/L
Jun-85	10	31	
Apr-86	<10	<20	
Jun-86	<10	<20	
Jun-87	<10	<20	
Jun-88	<10	<20	
Mar-89	<10	23.0	
Jun-89	10.0	<20	
Oct-89	<10	<20	
Jun-90	32.0	45.0	
Jun-91	<10	<20	
Jun-92	32.0	49.0	
Jun-93	13.0	<20	
Jun-94	<10	<20	
Jun-95	5.3	7.8	
Apr-96	5.8	5.1	
Dec-96	ND	3.6	
Mar-97	4.4	16.4	18.1
Jun-97	13.3	18.3	
Jun-98	5.1	22.1	
Jun-99	1.6	3.2	
Jun-00	2.4	2.11	
Jun-01	3.16	0.37	
Sep-01	3.04	4.36	
Jun-02	3.95	3.38	
Feb-03	3.4	2.38	5.27
Jun-03	3.95	12	23.2
Sep-03	2.82	20.8	21.2

ND - NOT DETECTABLE

CIMARRON FACILITY - ENVIRONMENTAL MONITOR WELLS

WELL #: 1312 GRID: 2092307E;321234.321I ELEVATION: 992.17 WELL DEPTH 39.45

WEST OF WASTE POND 1 SAMPLE DATE	GROSS ALPHA pCI/L	GROSS BETA pCI/L	Tc-99 pCI/L
Jun-85	2220	8272	
Apr-86	340	11800	
Jun-86	94	7300	
Jun-87	41	65	
Jun-88	90	231	
Mar-89	59.0	2370.0	
Jun-89	250.0	8000.0	
Oct-89	64.0	6200.0	
Jun-90	200.0	1320.0	
Jun-91	953.0	2620.0	
Jun-92	840.0	1200.0	
Jun-93	116.0	176.0	
Jun-94	348.0	521.0	
Jun-95	82.6	1670.0	
Apr-96	37.0	2600.0	
Oct-96	52.3	1490.0	856.0
Dec-96	34.6	1940.0	
Mar-97	33.5	1550.0	3680.0
Jun-97	92.5	1230.0	1470.0
Sep-97	31.3	1610.0	2190.0
Dec-97	27.3	1800.0	1570.0
Mar-98	15.8	1400.0	1850.0
Jun-98	57.7	1510.0	1820.0
Sep-98	16.8	1630.0	2110.0
Dec-98	19.5	1200.0	1650.0
Mar-99	28.1	973.0	1450.0
Jun-99	24.0	438.0	569.0
Sep-99	20.1	807.0	919.0
Dec-99	31.9	905.0	1410.0
Mar-00	28.3	624.0	1350.0
Jun-00	45.0	406.0	930.0
Sep-00	45.2	503.0	1100.0
Dec-00	42.2	536.0	1120.0
Mar-01			957.0
Jun-01	65.5	381.0	747.0
Sep-01	28.2	86.1	557.0
Dec-01	39.4	176.0	744.0
Mar-02	26	214	859
Jun-02	47	373	826
Jun-02	24.3	216	824
Sep-02	54.1	567	1030
Dec-02	45.3	583	1030
Feb-03	40.7	687	1260
Jun-03	59	978	2060
Sep-03	62.1	1810	2850

CIMARRON FACILITY - ENVIRONMENTAL MONITOR WELLS

WELL #: 1313 GRID: 2092343E ; 321380.219 ELEVATION: 994.7 WELL DEPTH: 40.55

NORTH OF WASTE POND 1 SAMPLE DATE	GROSS ALPHA pCi/L	GROSS BETA pCi/L	Tc-99 pCi/L
Jun-85	453	1512	
Apr-86	140	208	
Jun-86	230	3000	
Jun-87	84	25	
Jun-88	61	24	
Mar-89	260.0	2200.0	
Jun-89	345.0	6400.0	
Oct-89	100.0	3100.0	
Jun-90	840.0	5760.0	
Jun-91	880.0	2004.0	
Jun-92	1510.0	1580.0	
Jun-93	647.0	791.0	
Jun-94	936.0	1240.0	
Jun-95	115.0	2960.0	
Apr-96	28.5	1202.0	
Oct-96			1410.0
Jun-97	65.8	768.0	1190.0
Sep-97	65.4	1280.0	1560.0
Dec-97	26.7	955.0	874.0
Mar-98	30.6	614.0	562.0
Jun-98	88.7	518.0	511.0
Sep-98	42.6	396.0	478.0
Dec-98	35.2	323.0	428.0
Mar-99	45.2	176.0	307.0
Jun-99	41.3	275.0	357.0
Sep-99	17.7	135.0	194.0
Dec-99	17.3	166.0	291.0
Mar-00	26.8	132.0	369.0
Jun-00	28.2	172.0	392.0
Sep-00	44.8	241.0	476.0
Dec-00	17.4	181.0	312.0
Mar-01			259.0
Jun-01	32.9	106.0	280.0
Sep-01	23.9	75.7	195.0
Dec-01	14.4	61.3	204
Mar-02	17.3	37.1	143
Jun-02	25.6	96	205
Jun-02	14.7	66	154
Sep-02	16.8	57.9	144
Dec-02	14.5	68.1	132
Feb-03	15.8	113	169
Jun-03	15.4	76.8	157
Sep-03	16	180	411

CIMARRON FACILITY - ENVIRONMENTAL MONITOR WELLS

WELL #: 1340 GRID:2092550E; 321342.409N ELEVATION: 984.68 WELL DEPTH: 30.5

EAST OF WASTE POND 1 SAMPLE DATE	GROSS ALPHA pCi/L	GROSS BETA pCi/L	TC 99 pCi/L
Feb-97	53.1	430.0	
Jun-97	7.8	144.0	
Sep-97	10.0	98.6	
Jun-98	1.9	61.3	
Jun-99	8.5	32.8	45.3
Mar-02	5.68	29.8	138
Jun-03	5.23	61.7	83.8
Sep-03	6.27	57.6	122

ND - NOT DETECTABLE

CIMARRON FACILITY - ENVIRONMENTAL MONITOR WELLS

WELL #: 1341 GRID: 2092542E ; 321354.535N ELEVATION: 985.17 WELL DEPTH: 60.5

EAST OF WASTE POND 1 SAMPLE DATE	GROSS ALPHA pCi/L	GROSS BETA pCi/L	Tc-99 pCi/L
Feb-97	10.9	117.0	
Jun-97	30.0	620.0	
Sep-97	1.1	194.0	
Jun-98	6.9	380.0	
Jun-99	4.9	355.0	489.00
Mar-02	2.37	3.6	0.52
Sep-02	15.1	252	433.00
Jun-03	10.2	211	323.00
Sep-03	4.09	120	263.00

ND - NOT DETECTABLE

CIMARRON FACILITY - ENVIRONMENTAL MONITOR WELLS

WELL #: 1345 GRID: 2092346.267E ; 321461.3 ELEVATION: 989.096 WELL DEPTH: 62.0

ALLUVIUM ADJACENT RIVER B.G. #2 SAMPLE DATE	GROSS ALPHA pCi/L	GROSS BETA pCi/L	TC 99 pCi/L
Apr-03			54.30
Apr-03	9.55	24.40	
Jun-03	3.66	1.34	-31.30
Sep-03	6.22	5.67	0.52

CIMARRON FACILITY - ENVIRONMENTAL MONITOR WELLS

WELL #: T - 57 GRID: 321787.811N-2092460. ELEVATION: 939.573 WELL DEPTH: 21.6

ALLUVIUM N. OF U-POND #1 SAMPLE DATE	GROSS ALPHA pCi/L	GROSS BETA pCi/L	Tc- 99 pCi/L
April-03	23.1	291	627
June-03	49.9	287	671
Sep-03	34.8	479	706

CIMARRON FACILITY - ENVIRONMENTAL MONITOR WELLS

WELL #: T - 58 GRID: 321742.286N-2092164. ELEVATION: 939.459 WELL DEPTH: 22.2

ALLUVIUM N. OF U-POND #1 SAMPLE DATE	GROSS ALPHA pCi/L	GROSS BETA pCi/L	Tc-99 pCi/L
Apr-03	43.90	63.80	115.00
Jun-03	34.30	64.10	124.00
Sep-03	29.40	48.00	69.90

CIMARRON FACILITY - ENVIRONMENTAL MONITOR WELLS

WELL #: T-62 :ID: E2091961.874 N 322775. ELEVATION: WELL DEPTH:

ALLUVIUM N.W. OF U-POND #1 SAMPLE DATE	GROSS ALPHA pCi/L	GROSS BETA pCi/L	Tc-99 pCi/L
Jul-03	200	182	464
Sep-03	182	298	510

ND - NOT DETECTABLE

CIMARRON FACILITY - ENVIRONMENTAL MONITOR WELLS

WELL #: T-63 GRID: ELEVATION: WELL DEPTH:

ALLUVIUM N.W. OF U-POND #1 SAMPLE DATE	GROSS ALPHA pCi/L	GROSS BETA pCi/L	Tc-99 pCi/L
Jul-03	69.5	270	715
Sep-03	82.1	657	1160

ND - NOT DETECTABLE

CIMARRON FACILITY - ENVIRONMENTAL MONITOR WELLS

WELL #: T-64 GRID: ELEVATION: WELL DEPTH:

ALLUVIUM N.W. OF U-POND #1	GROSS ALPHA	GROSS BETA	Tc-99
SAMPLE DATE	pCi/L	pCi/L	pCi/L
Sep-03	25.1	15.7	26.7

ND - NOT DETECTABLE

CIMARRON FACILITY - ENVIRONMENTAL MONITOR WELLS

WELL #: T-65 GRID: ELEVATION: WELL DEPTH:

ALLUVIUM N.W. OF U-POND #1	GROSS ALPHA	GROSS BETA	Tc-99
SAMPLE DATE	pCi/L	pCi/L	pCi/L
16-Sep-03	156	179	267

ND - NOT DETECTABLE

ATTACHMENT F

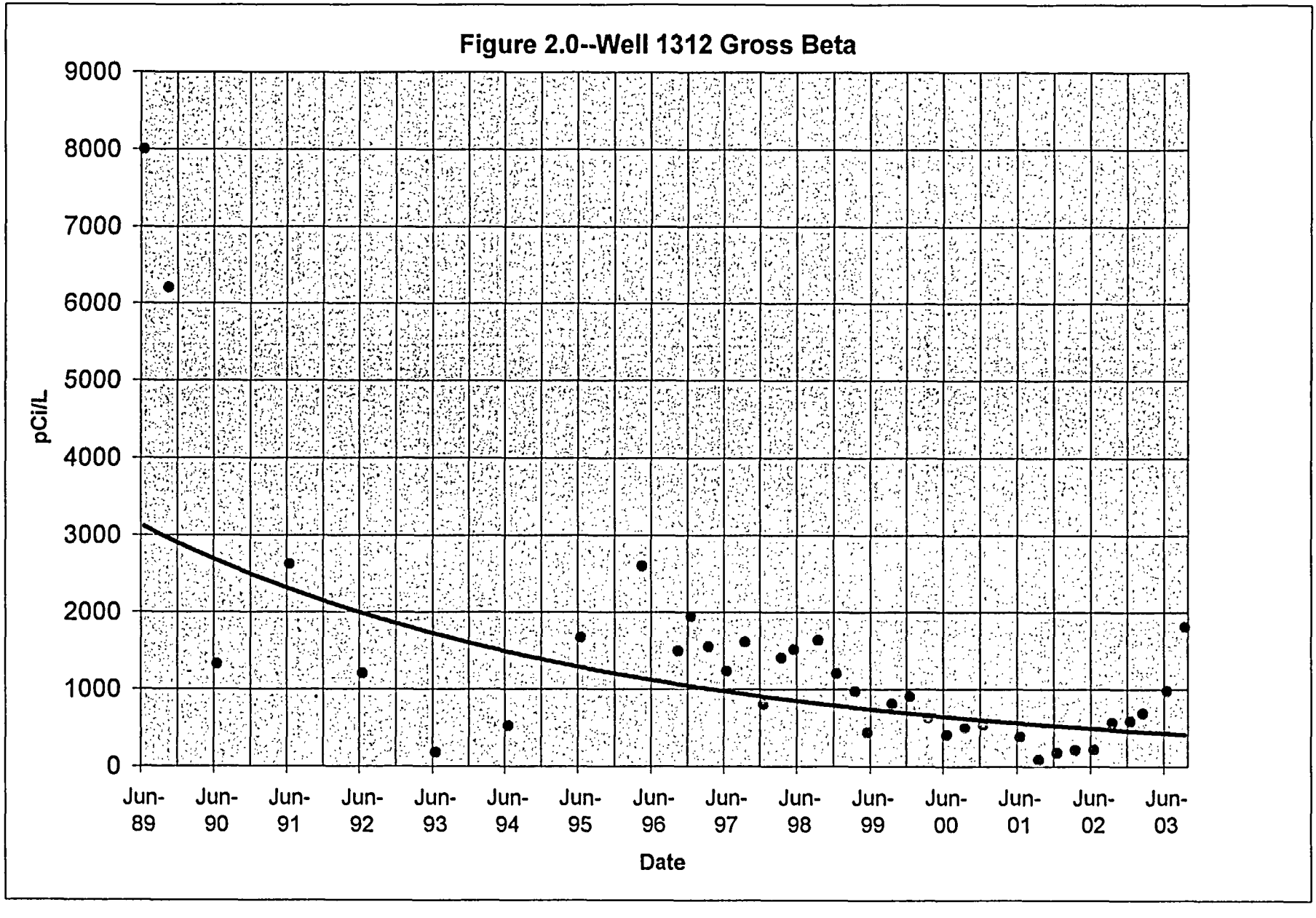
Figure 2.0--Well 1312 Gross Beta
9000
8000
7000
6000
5000
4000
3000
2000
1000
0
pCi/L
Jun-89
Jun-90
Jun-91
Jun-92
Jun-93
Jun-94
Jun-95
Jun-96
Jun-97
Jun-98
Jun-99
Jun-00
Jun-01
Jun-02
Jun-03
Date

Figure 3.0--Well 1312--Tc 99

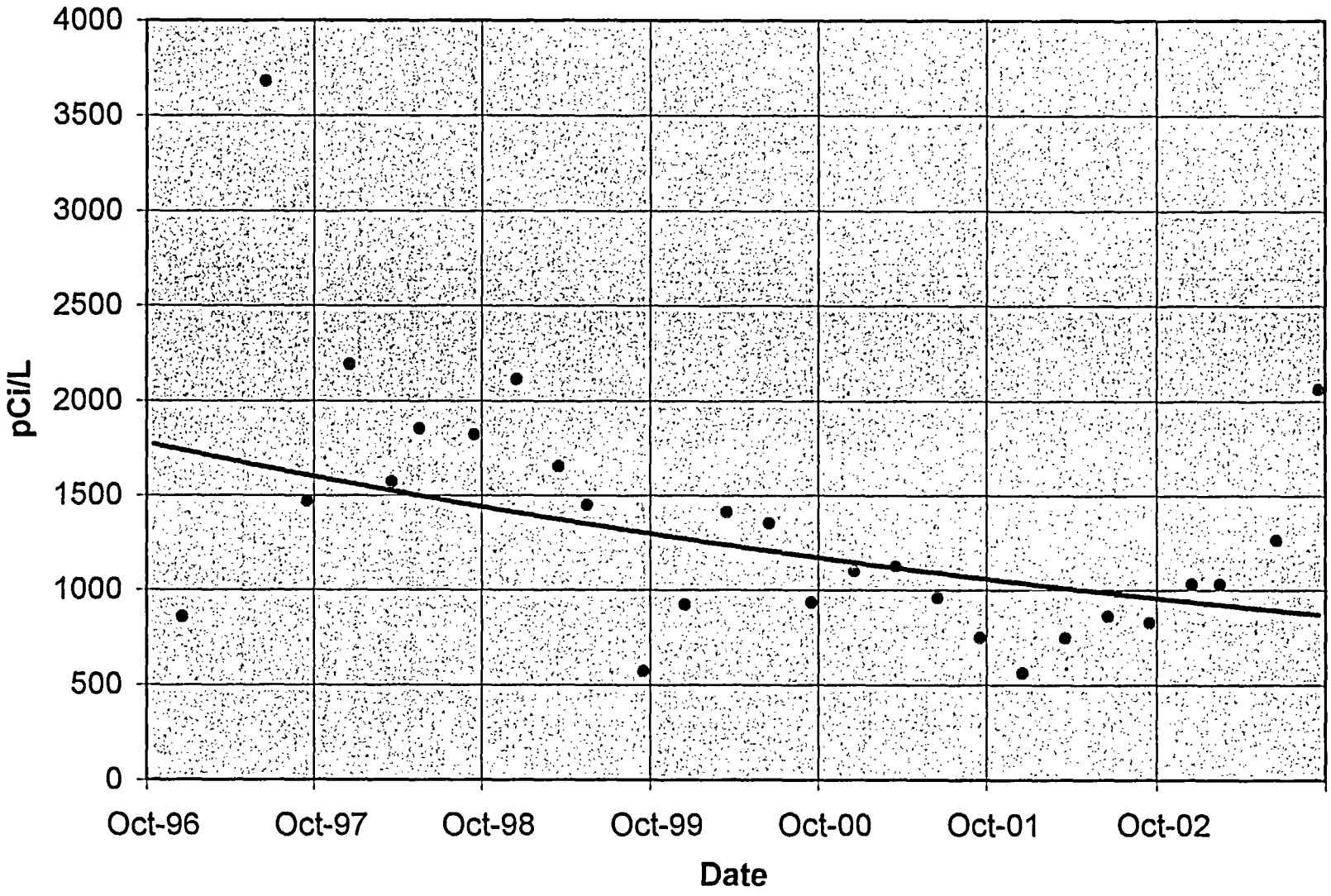

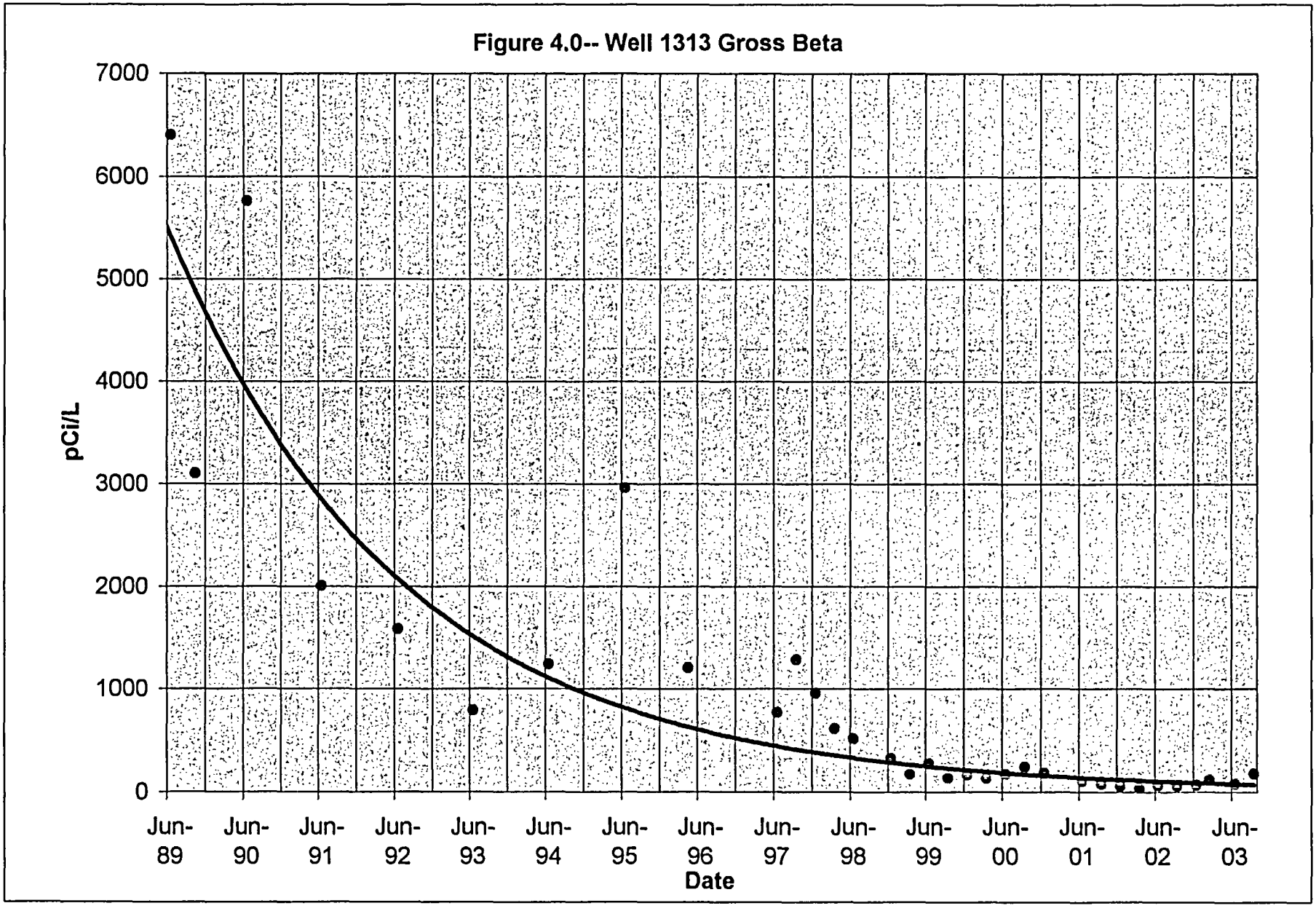
Figure 4.0-- Well 1313 Gross Beta
7000
6000
5000
4000
3000
2000
1000
0
pCi/L
Jun-89
Jun-90
Jun-91
Jun-92
Jun-93
Jun-94
Jun-95
Jun-96
Jun-97
Jun-98
Jun-99
Jun-00
Jun-01
Jun-02
Jun-03
Date

Figure 5.0--Well 1313--Tc 99

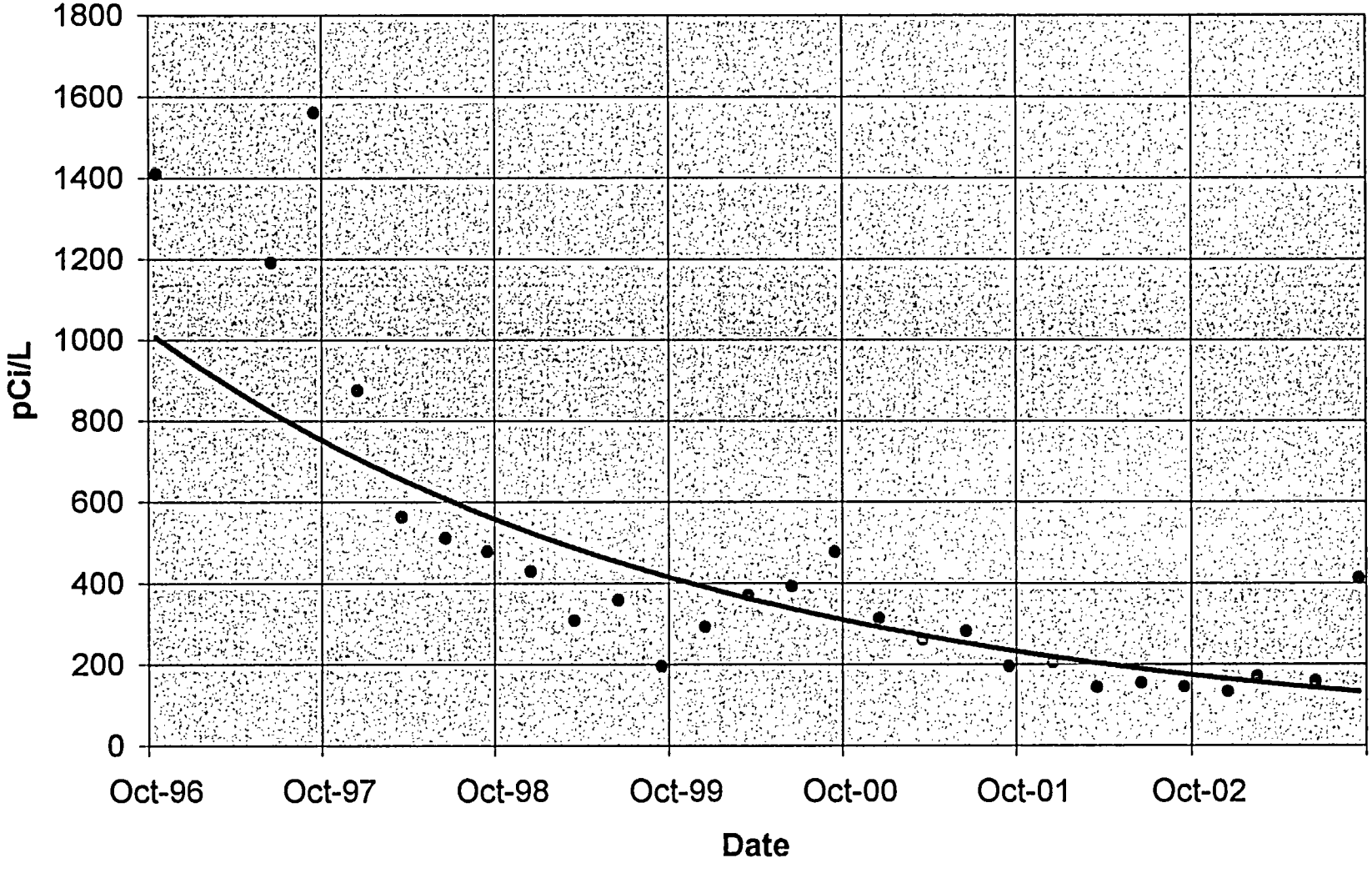

ATTACHMENT G

CIMARRON FACILITY - ENVIRONMENTAL SURFACE WATER

1206 GRID: 2092443.054E : 320560.873N ELEVATION 971.084

Seep N.E. OF of U-Plant SAMPLE DATE	GROSS ALPHA pCi/L	GROSS BETA pCi/L	TC -99 pCi/L
Jun-77	185.00	787.00	
Jun-78	69.00	480.00	
Jun-79	19.00	371.00	
Jun-80	130.00	2600.00	
Jun-81	100.00	755.00	
Jun-82	54.00	36.00	
Jun-83	160.00	160.00	
Jun-84	DRY	DRY	
Jun-85	195.00	216.00	
Jun-86	130.00	199.00	
Jun-87	27.00	<20	
Jun-88	330.00	150.00	
Jun-89	190.00	52.00	
Jun-90	260.00	62.00	
Jun-91	195.00	76.00	
Jun-92	126.00	<20	
Jun-93	11.00	<20	
Jun-94	261.00	37.00	
Jun-95	59.60	28.10	
Apr-96	258.00	77.60	
Dec-96	96.20	55.20	
Mar-97	162.00	40.50	12.20
Jun-97	273.00	116.00	25.40
Sep-97	155.00	64.10	54.40
Dec-97	DRY	DRY	DRY
Mar-98	89.30	30.50	
Jun-98	56.30	8.40	
Dec-98	106.00	24.00	
Mar-99	90.20	7.10	
Jun-99	40.00	27.90	
Sep-99	72.10	56.70	
Dec-99	102.00	47.00	
Mar-00	109.00	33.80	
Aug-00	82.30	34.30	
Sep-00	80.70	34.00	
Dec-00	74.30	40.60	
Jun-01	117.00	35.00	
Jun-01	87.60	35.20	
Sep-01	74.20	35.70	
Dec-01	86.80	30.20	
Mar-02	96.30	41.60	
Jun-02	159.00	47.50	40.80
Jun-02	102.00	36.90	19.90
Sep-02	148.00	36.30	
Dec-02	167.00	33.10	
Feb-03	129.00	46.90	
Apr-03	215.00	51.60	
Apr-03	129.00	44.30	
Jun-03	95.10	33.10	
Jul-03	87.80	27.80	
Sep-03	119.00	28.80	14.40

CIMARRON FACILITY - ENVIRONMENTAL MONITOR WELLS

WELL #: 1320 GRID: 2093144E ; 321379.772N ELEVATION: 998.14 WELL DEPTH: 43.3

WEST OF WASTE POND 2 SAMPLE DATE	GROSS ALPHA pCi/L	GROSS BETA pCi/L	Tc-99 pCi/L
Mar-89	<10	<20	
Jun-89	12.0	<20	
Oct-89	10.0	<20	
Jun-90	<10	<20	
Jun-91	10.0	<20	
Jun-92	14.0	<20	
Jun-93	14.0	24.0	
Jun-94	19.0	<20	
Jun-95	12.7	59.6	
Apr-96	1.6	166	
Oct-96	3.9	20.4	28.2
Jun-97	11.6	30.3	34.0
Jun-98	19.6	48.6	
Jun-99	3.5	10.1	
Jun-00	2.58	4.08	
Jun-01	3.92	4.74	
Jun-02	6.93	2	23
Jun-02	6.82	7.33	1.59
Jun-03	2.08	4.17	4.84
Sep-03			6.89

ND - NOT DETECTABLE

CIMARRON FACILITY - ENVIRONMENTAL MONITOR WELLS

WELL #: 1325 GRID: 2093350E ; 320610.626N ELEVATION: 1008.32 WELL DEPTH: 50.1

SOUTH OF ONSITE DISPOSAL CELL SAMPLE DATE	GROSS ALPHA pCi/L	GROSS BETA pCi/L	Tc-99 pCi/L
Mar-89	<10	<20	
Jun-89	<10	<20	
Oct-89	<10	<20	
Jun-90	<10	24.0	
Jun-91	<10	<20	
Jun-92	<10	<20	
Jun-93	<10	<20	
Jun-94	<10	<20	
Jun-95	5.3	6.3	
Apr-96	1.7	5.1	
Jun-97	3.1	ND	
Jun-98	ND	2.2	
Jun-99	1.3	0.9	
Jun-00	0.9	1.58	
Jun-01	0.845	3.61	
Jun-02	1.15	2.3	
Jun-03	0.722	1.57	
Sep-03	1.92	-0.315	7.74

ND - NOT DETECTABLE

CIMARRON FACILITY - ENVIRONMENTAL MONITOR WELLS

WELL #: 1336 GRID: ELEVATION: 986.02 WELL DEPTH: 30.8

NORTH OF WASTE POND 2 SAMPLE DATE	GROSS ALPHA pCi/L	GROSS BETA pCi/L	Tc-99 pCi/L
Mar-89	140.0	4970.0	
Jun-89	170.0	11000.0	
Oct-89	28.0	8300.0	
Jun-90	980.0	5300.0	
Jun-91	1010.0	2082.0	
	WELL NO. 1336 OUT OF SERVICE IN 1991 - REPLACED WITH 1336A JUNE 1994		

ND - NOT DETECTABLE

WELL #: 1336 A GRID: 2093108E ; 321859.493N ELEVATION: 986.02 WELL DEPTH: 30.8

NORTH OF WASTE POND 2 SAMPLE DATE	GROSS ALPHA pCi/L	GROSS BETA pCi/L	Tc-99 pCi/L
Jun-94	682.0	1100.0	
Jan-95	38.1	1140.0	
Feb-95	31.0	948.0	
Mar-95	37.0	1060.0	
Apr-95	53.4	1740.0	
May-95	18.5	1980.0	
Jun-95	67.6	2150.0	
Jul-95	80.3	1500.0	
Aug-95	93.0	2090.0	
Sep-95	40.1	937.0	
Oct-95	50.8	1490.0	
Nov-95	26.7	1340.0	
Dec-95	32.3	1630.0	
Jan-96	43.1	1700.0	
Feb-96	21.0	1290.0	
Mar-96	41.6	1170.0	
Apr-96	39.0	1398.0	
Apr-96	67.9	1020.0	
Apr-96	77.7	1280.0	
May-96	93.1	1210.0	
May-96	43.0	1503.0	
Jun-96	54.1	1330.0	
Jul-96	91.5	1060.0	
Aug-96	88.7	1520.0	
Sep-96	158.0	1470.0	
Oct-96	117.0	1730.0	
Nov-96	39.8	1400.0	
Dec-96	69.9	1340.0	
Mar-97	46.6	1520.0	2590.0
Jun-97	61.4	1430.0	1930.0
Sep-97	54.9	1390.0	1880.0
Dec-97	109.0	2200.0	1200.0
Mar-98	27.2	1400.0	1600.0
Jun-98	13.6	1380.0	1850.0
Sep-98	75.8	1210.0	1510.0
Dec-98	48.1	923.0	1260.0
Mar-99	26.0	806.0	
Jun-99	23.7	740.0	974.0
Sep-99	15.8	612.0	713.0
Dec-99	23.8	724.0	1160.0
Mar-00	34.5	134.0	1070.0
Jun-00	49.3	411.0	
Sep-00	27.4	373.0	939.0
Dec-00	30.9	369.0	890.0
Mar-01			946.0
Jun-01	33.6	386.0	875.0
Sep-01	14.2	143.0	571.0
Dec-01	35.6	184	600
Mar-02	16.5	214	844
Jun-02	36	520	1060
Jun-02	25.8	291	788
Sep-02	48.4	568	898
Dec-02	33.8	628	1020
Jun-03	26.6	424	952
Sep-03	80.4	615	947

CIMARRON FACILITY - ENVIRONMENTAL MONITOR WELLS

WELL #: 1337 GRID: 2093545E ; 321832.546N ELEVATION: 995.67 WELL DEPTH: 34.5

N.E. OF WASTE POND 2 SAMPLE DATE	GROSS ALPHA pCi/L	GROSS BETA pCi/L	Tc-99 pCi/L
Feb-97	39.30	343.00	
Jun-97	17.00	143.00	
Jun-98	20.50	171.00	
Jun-99	12.40	78.20	113.00
Mar-02	9.60	51.20	207.00
Jun-03	15.60	148.00	234.00
Sep-03	14.50	95.10	294.00

ND - NOT DETECTABLE

CIMARRON FACILITY - ENVIRONMENTAL MONITOR WELLS

WELL #: 1338 GRID: 2093545E ; 321818.991N ELEVATION: 995.47 WELL DEPTH: 59.5

N.E. OF WASTE POND 2 SAMPLE DATE	GROSS ALPHA pCi/L	GROSS BETA pCi/L	Tc-99 pCi/L
Feb-97	44.6	130.0	
Jun-97	10.1	102.0	
Jun-98	ND	43.5	
Jun-99	1.8	28.1	32.7
Mar-02	2.92	10.1	23.1
Jun-03	-1.68	7.34	-4.08
Sep-03	5.63	8.55	8.77

ND - NOT DETECTABLE

CIMARRON FACILITY - ENVIRONMENTAL MONITOR WELLS

WELL #: 1343 GRID: 2093597;323387.363N ELEVATION: 939.23 WELL DEPTH: 25.8

ALLUVIUM ADJACENT RIVER SAMPLE DATE	GROSS ALPHA pCi/L	GROSS BETA pCi/L	Tc-99 pCi/L
Oct-97	82.6	46.5	12.5
Dec-97	25.2	7.9	
Mar-98	9.8	10.4	
Jun-98	6.5	7.4	
Jun-99	7.6	ND	
Jun-00	21.6	26.8	
Jan-00	33.6	14.1	
Jun-01	25.3	29.9	
Jun-03	14.1	4.46	-33.1
Sep-03	12.7	2.05	0.748

ND - NOT DETECTABLE

CIMARRON FACILITY - ENVIRONMENTAL MONITOR WELLS

WELL #: 1346 RID: E2093199.85 N321854.2 ELEVATION: 991.87 WELL DEPTH: 62.2

NORTH WASTE POND #2 SAMPLE DATE	GROSS ALPHA pCi/L	GROSS BETA pCi/L	Tc-99 pCi/L
Apr-03			291.00
Apr-03	12.40	149.00	
Jun-03	2.20	174.00	5.99
Sep-03	5.47	90.40	84.20

CIMARRON FACILITY - ENVIRONMENTAL MONITOR WELLS

WELL #: 1347 GRID: E 2093364.382 N 321 ELEVATION: 996.716 WELL DEPTH: 41.9

NORTH OF WASTE POND #2 SAMPLE DATE	GROSS ALPAH pCi/L	GROSS BETA pCi/L	Tc-99 pCi/L
Apr-03			720.00
Apr-03	70.30	347.00	
Jun-03	61.30	35.60	96.10
Sep-03	67.50	28.90	45.30

CIMARRON FACILITY - ENVIRONMENTAL MONITOR WELLS

WELL #: T - 54 Grid: 321927.482N-2092869.9 ELEVATION:940342 WELL DEPTH: 18.7

ALLUVIUM N. OF U-POND #2 SAMPLE DATE	GROSS ALPHA pCi/L	GROSS BETA pCi/L	Tc-99 pCi/L
Apr-03	6.19	535.00	1320.00
Jun-03	26.60	678.00	1480.00
Sep-03	26.50	701.00	1310.00

CIMARRON FACILITY - ENVIRONMENTAL MONITOR WELLS

WELL #: T - 55 GRID: 322069.474N-2093119. ELEVATION: 938.807 WELL DEPTH: 18.5

ALLUVIUM N. OF U-POND #2 SAMPLE DATE	GROSS ALPHA pCi/L	GROSS BETA pCi/L	Tc-99 pCi/L
Apr-03	12.00	705.00	1590.00
Jun-03	12.90	343.00	767.00
Sep-03	10.40	186.00	286.00

CIMARRON FACILITY - ENVIRONMENTAL MONITOR WELLS

WELL #: T - 56 GRID: 322211.053N-2093377. ELEVATION: 938.08 WELL DEPTH: 17.2

ALLUVIUM N. OF U-POND #2 SAMPLE DATE	GROSS ALPHA pCi/L	GROSS BETA pCi/L	Tc-99 pCi/L
Apr-03	5.47	84.20	167.00
Jun-03	5.95	68.10	220.00
Sep-03	0.93	158.00	237.00

CIMARRON FACILITY - ENVIRONMENTAL MONITOR WELLS

WELL #: T - 59 GRID: 322773.741N-2092954. ELEVATION: 938.22 WELL DEPTH: 29.0

ALLUVIUM N. OF U-POND #2 SAMPLE DATE	GROSS ALPHA pCi/L	GROSS BETA pCi/L	Tc-99 pCi/L
April-03	15.60	14.70	16.60
June-03	51.90	42.30	-5.17
Sep-03	56.00	30.60	14.50

CIMARRON FACILITY - ENVIRONMENTAL MONITOR WELLS

WELL #: T - 60 GRID:322773.834N-2093281.3 ELEVATION: 938.112 WELL DEPTH: 29.0

ALLUVIUM N. OF U-POND #2 SAMPLE DATE	GROSS ALPHA pCi/L	GROSS BETA pCi/L	Tc-99 pCi/L
Apr-03	99.90	61.90	23.70
Jun-03	16.70	26.80	11.70
Sep-03	13.90	11.80	14.30

CIMARRON FACILITY - ENVIRONMENTAL MONITOR WELLS

WELL #: T - 61 GRID: 322774.189N-2093609. ELEVATION: 938.695 WELL DEPTH: 27.4

ALLUVIUM N. OF U-POND #2 SAMPLE DATE	GROSS ALPHA pCi/L	GROSS BETA pCi/L	Tc-99 pCi/L
Apr-03	30.10	15.80	15.90
Jun-03	24.10	13.40	2.73
Sep-03	36.80	17.10	20.00

ATTACHMENT H

Figure 6.0-- Well 1336 Gross Beta

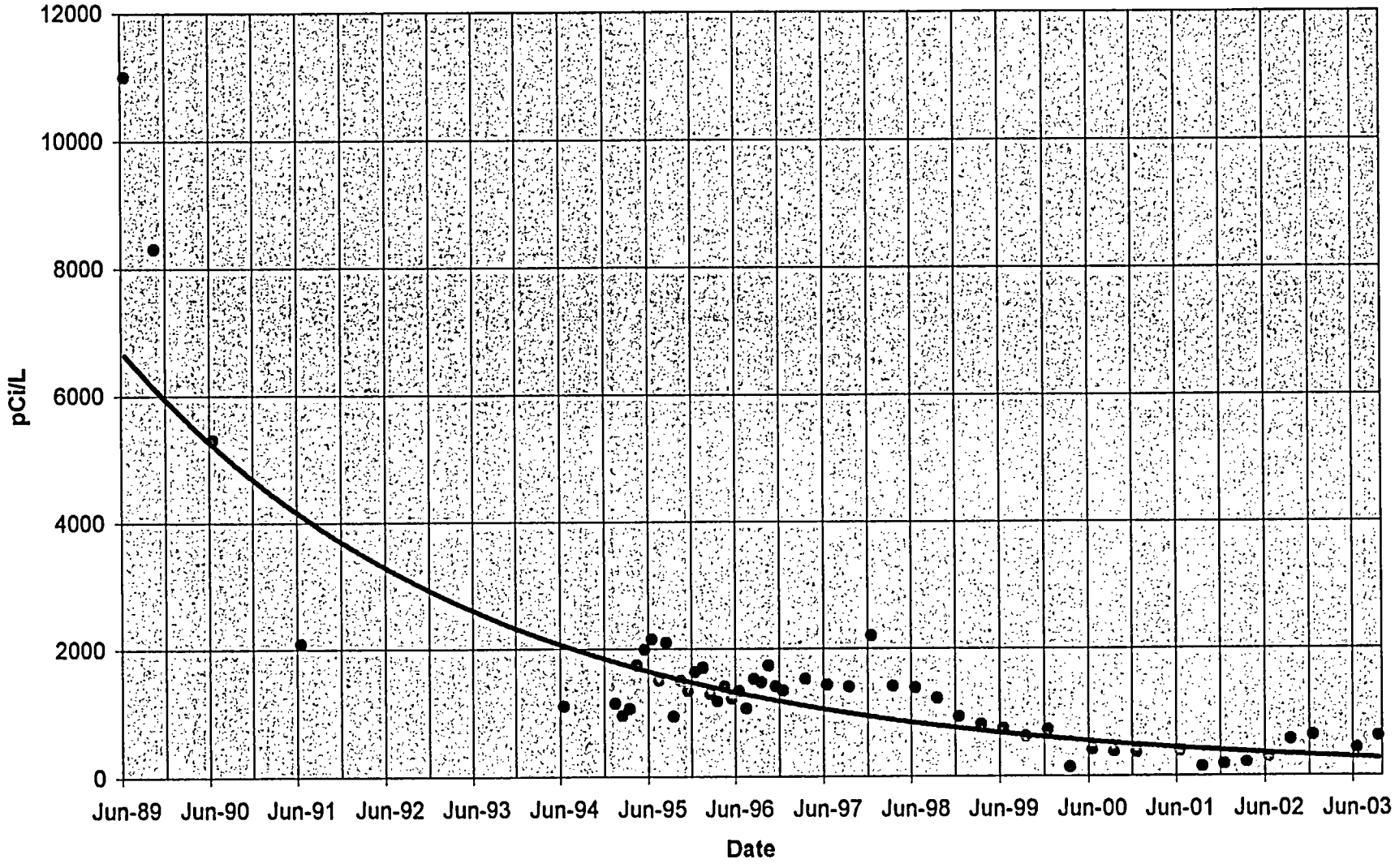

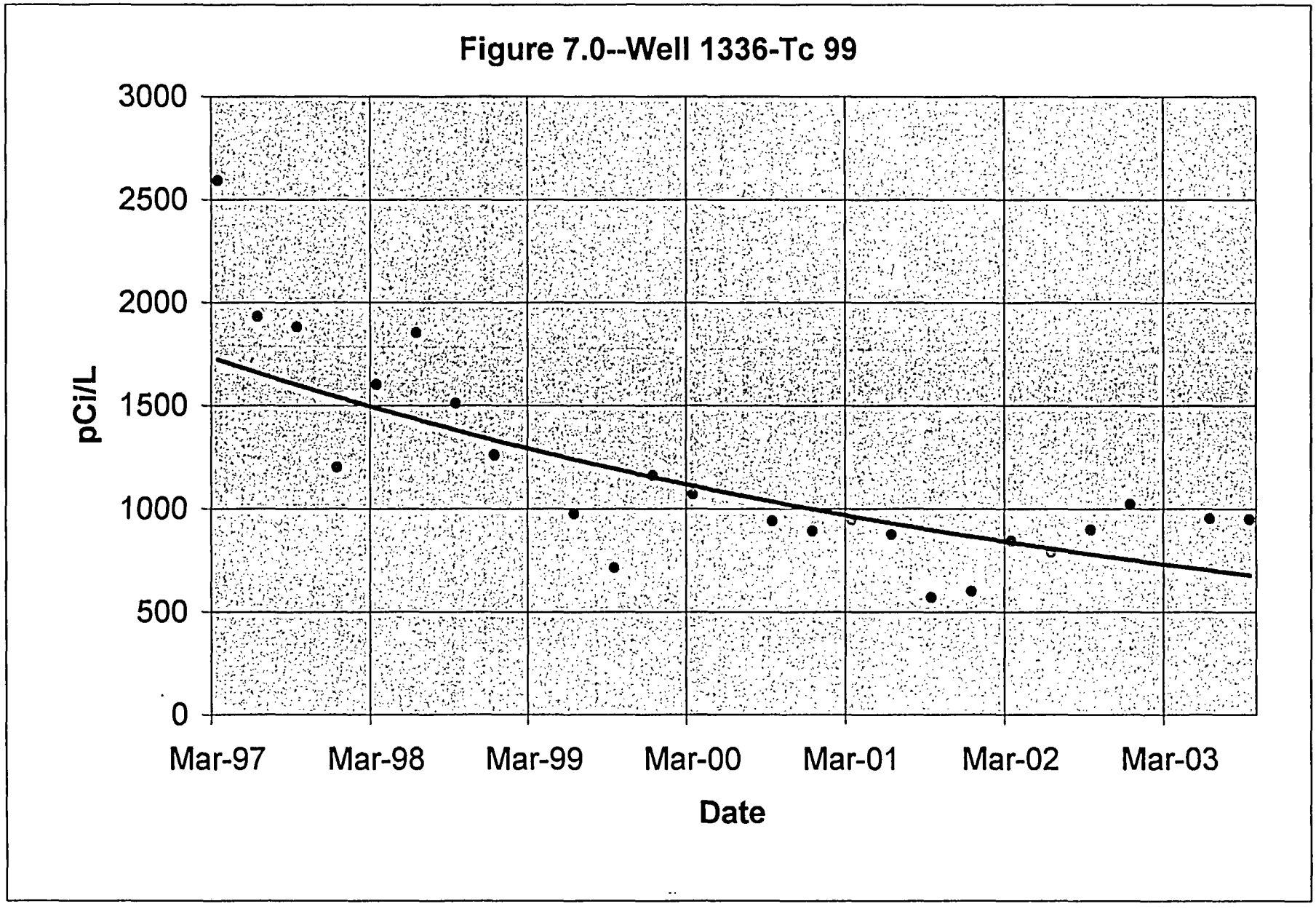
Figure 7.0--Well 1336-Tc 99
3000
2500
2000
1500
1000
500
0
pCi/L
Mar-97
Mar-98
Mar-99
Mar-00
Mar-01
Mar-02
Mar-03
Date

Figure 8.0--Seep 1208 Gross Beta

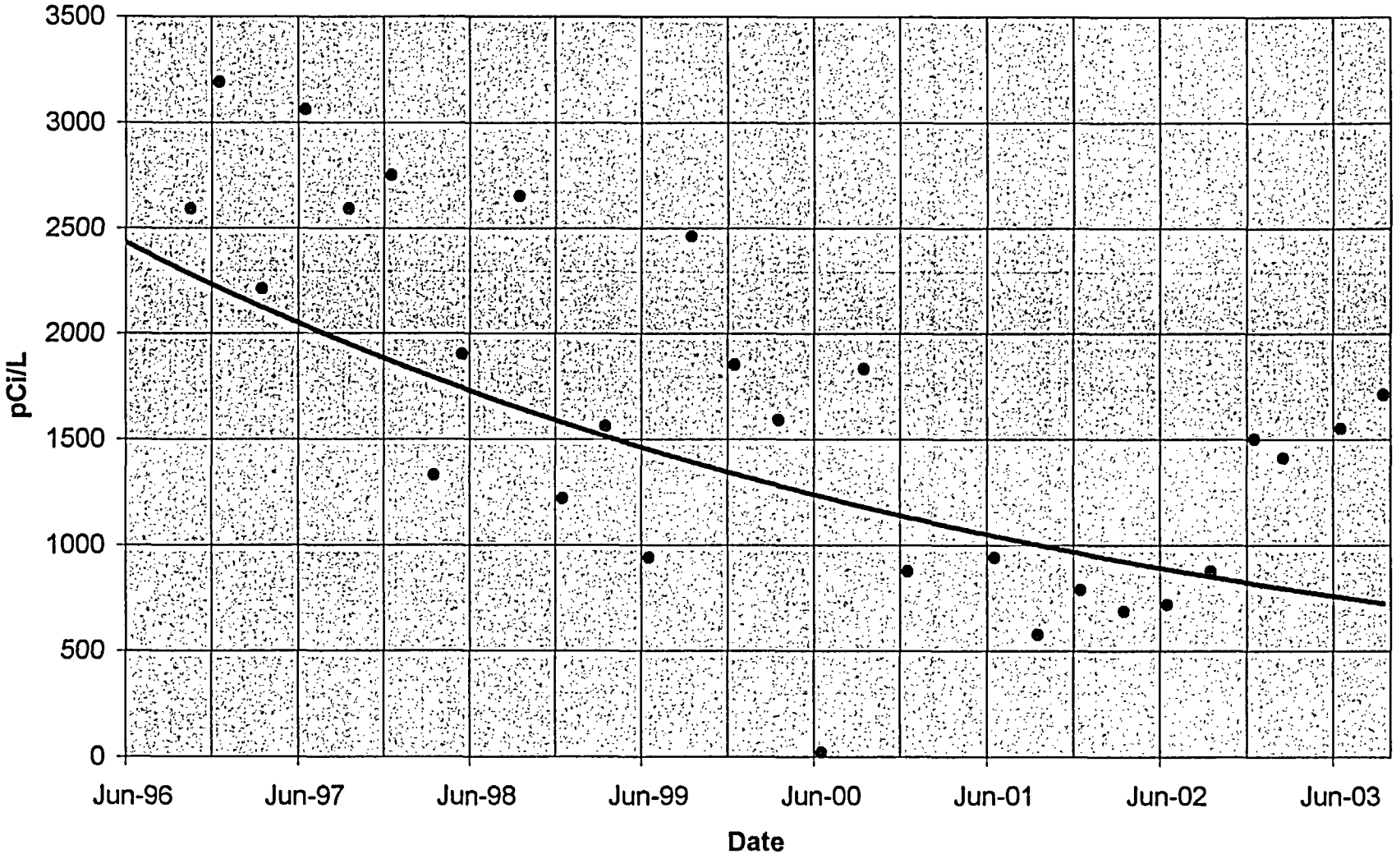
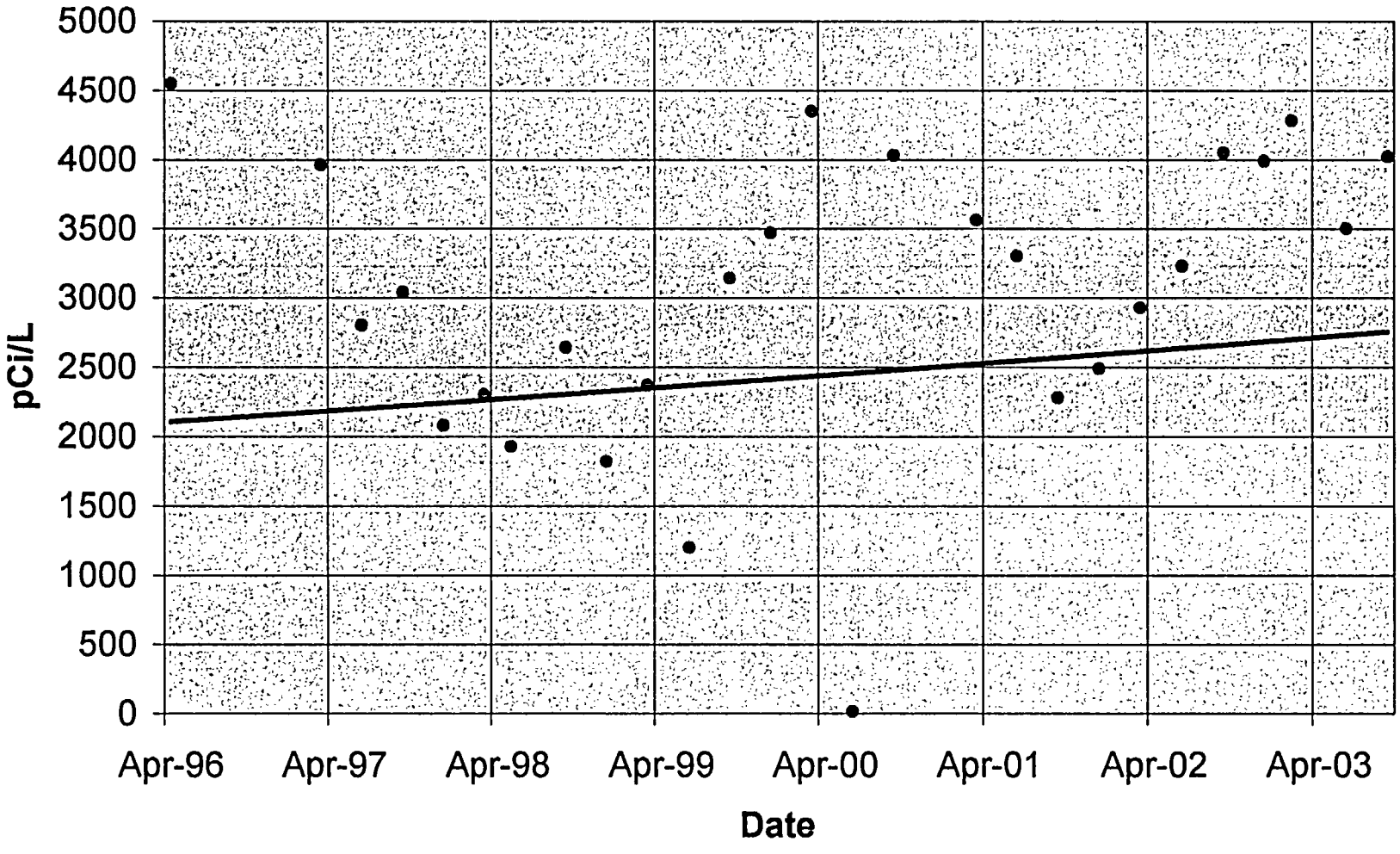
Figure 9.0--Seep 1208-Tc 99