© COPYRIGHT 2000 BY ION TRACK INSTRUMENTS LLC, ALL RIGHTS RESERVED

NOTES:

1. SEE SEPARATE PARTS LIST.
2. ASSEMBLE PER MP022222.

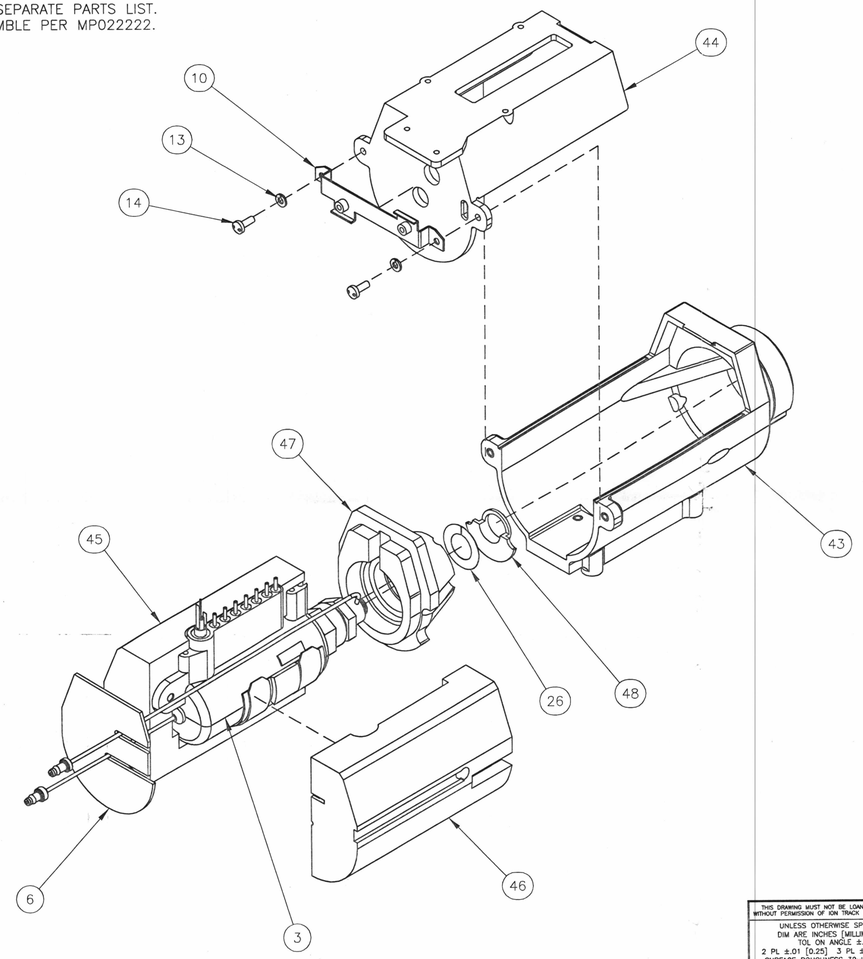

REVISION HISTORY

REV	ECO	DESCRIPTION	DATE	APP'D
1	200055	RELEASE TO PRODUCTION PER ERN 188, FORMERLY M0001209 REV 7		
2	200258	REPLACE INSULATION AND ADD CENTERING RING.	10/22/2002	

THIS DRAWING MUST NOT BE LOANED OR COPIED WITHOUT PERMISSION OF ION TRACK INSTRUMENTS LLC

UNLESS OTHERWISE SPECIFIED
DIM ARE INCHES [MILLIMETERS]
TOL ON ANGLE ±.5°
2 PL ±.01 [0.25] 3 PL ±.005 [0.13]
SURFACE ROUGHNESS 32μIN [0.80μM]
INTERPRET DIM AND TOL PER
ASME Y14.5M-1994

THIRD ANGLE PROJECTION

MATERIAL

FINISH

APPROVALS		DATE
DRAWN BY:	R.CHOUINARD	10/22/2002
MFG ENG'R:	R.CHOUINARD	10/22/2002
PROJ ENG'R:	S. CROOK	10/22/2002

ION TRACK INSTRUMENTS
205 Lowell Street Wilmington MA 01887-2941
978-658-3767

TITLE: DETECTOR ASSEMBLY, VTEX

SIZE	CAGE CODE	DWG NO	REV
C	55503	MD001209	2

SCALE NONE SHEET 1 OF 2

D-15