MOL.19980811.0635

CRWMS/M&O

Calculation Cover Sheet

Complete only applicable items.

1. QA: L NA (ETD) 8/12/98 P.A. 8/13/98

2. Calculation Title Criticality Evaluation of Plutonium Disposition Ceramic Waste Form: Intact Mode	
3. Document Identifier (including Revision Number) BBA000000-01717-0210-00012 REV 00	4. Total Pages 15
5. Total Attachments 25	6. Attachment Numbers - Number of pages in each I/12, II/1, III-a/1, III-b/1, IV/3, V/3, see remarks below for attachments VI through XXV

	Print Name	Signature	Date
7. Originator	Bassam J. Dahdouh	Bassam J. Dahdouh	7/30/1998
8. Checker	Amir S. Mobasheran	Amir S. Mobasheran	7/30/98
9. Lead Design Engineer	Peter Gottlieb	Peter Gottlieb	7/30/98

10. Remarks

Magnetic Tape I.D. # BBA000000-01717-0210-00012 Rev 00 containing 20 attachments (attachments VI, VII, VIII, IX, X, XI, XII, XIII, XIV, XV, XVI, XVII, XVIII, XIX, XX, XXI, XXII, XXIII, XXIV, XXV) of computer files representing outputs for each of the cases considered as shown in Section 8.

Revision History

11. Revision No.	12. Date Approved	13. Description of Revision

Table of Contents

1. Purpose

The purpose of this calculation is to investigate the criticality of a 5 High-Level Waste (HLW) Canister Waste Package (WP) containing immobilized plutonium arriving at a repository in the form of ceramic disks embedded inside the HLW glass pour canisters (see Figures 5-3 and 5-4). This WP configuration includes a centrally located central tube. The results of this analysis will be used in subsequent evaluations leading to the final selection of a waste package design for immobilized plutonium to be placed in a Monitored Geologic Repository (MGR).

2. Method

The tools utilized for this criticality calculation are the Monte Carlo N-Particle Version 4B2 computer code (MCNP4B) and Microsoft Excel. The MCNP4B2 code package uses the Monte Carlo methodology to perform transport calculations and arrive at the effective neutron multiplication factor, k_{eff}. The Monte Carlo numerical method simulates and records the behavior of individual particles within the system as an estimate for criticality potential. This mathematical approach applies random selections of particle transport characteristics and interactions based on probabilities, cross sections, and system geometry. The fission process is regarded as the birth event that separates generations of neutrons. A generation is the lifetime of a neutron from birth by fission to death by either escape, parasitic capture, or absorption leading to fission. The average behavior of the sample set of neutrons is used to describe the average behavior of the system with regards to the number of neutrons in successive generations, i.e., effective neutron multiplication factor, k_{eff}. This code was used to calculate the k_{eff} of the model developed for this analysis. The input to the MCNP4B computer code is taken from the geometry and the composition results obtained using the parameters shown in Section 5 and data obtained from the Lawrence Livermore National Laboratory report PIP 98-012 (Ref. 7.1).

3. Assumptions

3.1 The High-Level Waste Disposal Canister geometry is assumed to be cylindrical in shape versus that given in Ref. 7.2, Figures 3.3.1 and 3.3.2, ORNL DWG 90-418 and ORNL DWG 90-419. The reason for this assumption is to simplify the canister geometry as compared to that given in Ref. 7.2. This assumption is used in Section 5.

3.2 Water will fill the central tube, see Section 5.3 and Figure 5-2, as well as the space surrounding the canisters inside the waste package. For conservatism, water will also

fill the voids present in the cans containing the immobilized plutonium. This assumption is used in Section 5.

3.3 The central tube and the waste canisters will settle in the waste package, as shown in Figure 5-2. This assumption is used in Section 5.

3.4 The HLW glass is assumed to be poured to fill the remaining space inside the HLW canisters, and the expanded or perforated metal magazine sleeve will be assumed not to form a barrier between the cans and the glass. The reason for this assumption is due to the fact that the can-in-canister design has not been finalized yet. This assumption is used in Section 5.

3.5 The materials content of the magazine sleeve, tie rods, scalloped plates, socket plates, latch, and support plates inside the waste canister as shown in Attachment II are not known at this time and thus are not considered. The reason for this assumption is due to the fact that the can-in-canister design has not been finalized yet. This assumption is used in Section 5.

4.0 Use of Computer Software

4.1 Software Approved for QA Work

4.1.1 MCNP4B2

MCNP4B2 computer code (Ref. 7.5), is used to calculate the effective neutron multiplication factor, k_{eff}, for this analysis, Reference 7.4.

- Program Name: MCNP
- Version/Revision Number: Version 4B2
- Computer Software Configuration Item (CSCI) Number: 30033 V4B2LV
- Computer Type: Hewlett Packard 9000, SUN Ultra2 Workstations, and Personal Computers (PC)

The input files used are echoed in their corresponding output files. The output files are listed in Attachments VI through XXV.

a) The MCNP4B2 computer code (Ref. 7.4) is an appropriate tool to be utilized to estimate the effective neutron multiplication factor k_{eff}.
b) This software has been validated over the range it was used.
c) It was previously obtained from the Software Control Management (SCM) in accordance with appropriate procedures.

4.2 Software Routines

4.2.1 Excel

- Title: Excel
- Version/Revision Number: Microsoft Excel 97
- The Excel spreadsheet program was used for simple numeric calculations as documented in Attachment IV

5. Calculation

The calculated parameters are derived by performing several activities. These activities are explained in the following sections.

5.1. Calculation Input

5.1.1 Description of the Discs and Cans Inside one Canister

An intact (non-degraded) 5-HLW WP is utilized to contain the immobilized plutonium in the form of ceramic discs inside cans, cans inside HLW waste canisters, and HLW canisters inside the WP. Each plutonium bearing can (Ref. 7.1) contains 20 cylindrical discs that are 2.625 inches in diameter and 1 inch thick. Each HLW canister contains 28 cans of immobilized plutonium. The cans are placed into seven tubes (4 cans per tube), arranged as shown in Figures 5-3 and 5-4. The cans in each tube are stacked vertically and separated by spacers called handling ugs, as shown in Attachment II. The ceramic discs do not fill the cans completely; voids are left inside the cans as shown in Figure 5-1. These voids were modeled in the analysis.

5.1.2 Description of a Single Can

The physical characteristics of a single can, Ref. 7.1, are taken as follows:

Ceramic discs per can	20
Height	53.34 cm
Outer diameter	7.62 cm
Wall thickness	0.3175 cm
Material	Type 316 Stainless Steel

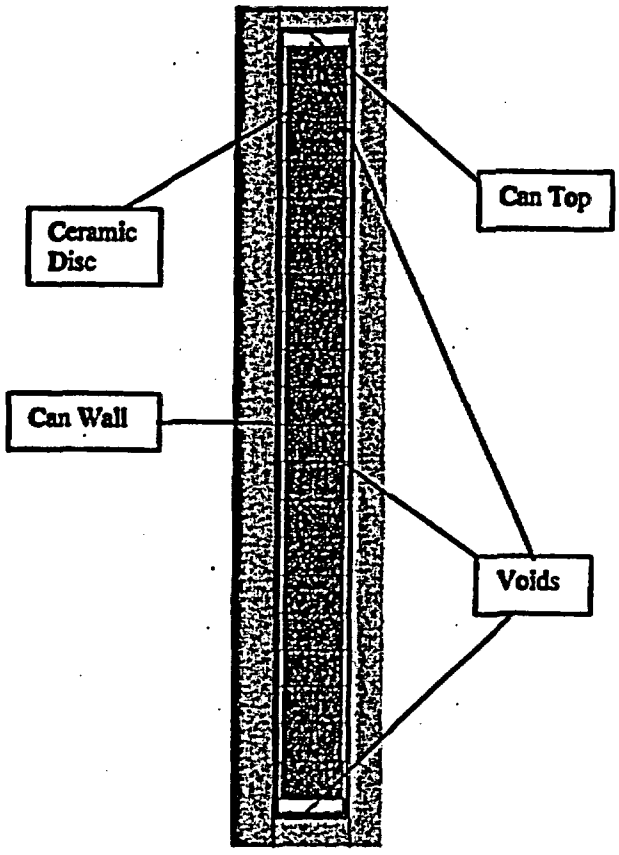

Figure 5-1. Discs in One Can With Voids Showing

5.1.3 Description of a Single Canister

The physical characteristics of a single HLW canister, Ref. 7.2, are taken as follows:

Cans per canister	28 (seven stacks of four)
Height	299.72 cm
Outer diameter	60.96 cm
Wall thickness	0.9525 cm
Material	Type 304L Stainless Steel

5.1.4 Description of Ceramic Discs

The physical characteristics of the cylindrical discs, Ref. 7.1, are as follows:

Diameter	6.6675 cm
Thickness	2.54 cm

5.1.5 Description of the Ceramic Chemical Composition

The chemical composition of the discs is analyzed as shown in Attachment IV.

5.1.6 Description of the Waste Package

The 5-HLW WP design used in the analysis is shown in Attachment I and Figure 5-2. It consists of inner and outer barriers. The materials and dimensions of the WP are given in Sections 5.4 and 5.6. The five HLW canisters were placed in a pentagonal array as shown in Figure 5-2. Figure 5-2 also shows the canisters and central tube settling due to the horizontal orientation of the emplaced WP. The 28 cans contained in seven tubes each containing 4 cans are shown in Figure 5-3.

Because the dimensions and material specifications of the can-in-canister were not given in Ref. 7.1, and Attachment II, the spacers/ugs dimensions were scaled to be 4.445 cm each. The coordinates of these geometries were entered in the input file as echoed in Attachments XXIV and XXV. HLW waste canister dimensions were taken from Ref. 7.2, Figures 3.3.1 and 3.3.2, ORNL DWG 90-418 and ORNL DWG 90-419, respectively.

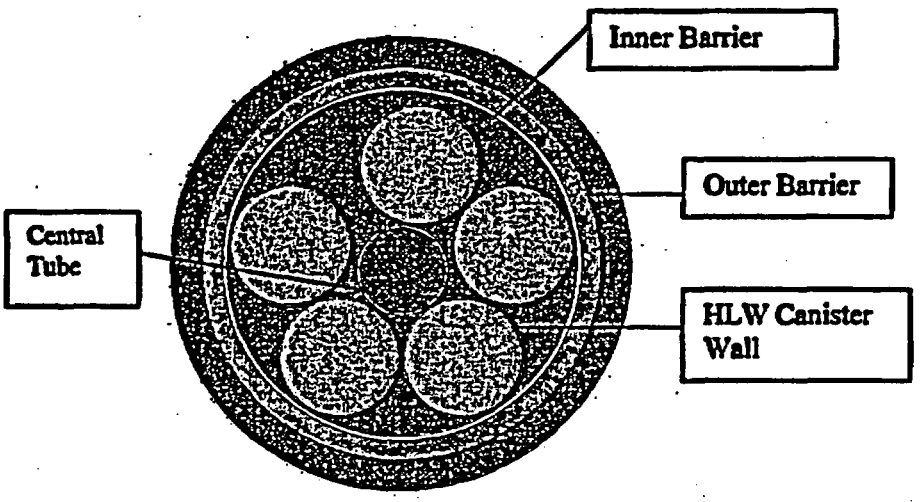

Figure 5-2. The Waste Package with the Five HLW Canisters and the Central Tube Settled

5.2. Waste Package and the Waste Canisters

The (x y z) coordinates of the five canisters fitting into the settled pentagonal array relative to the WP centerline, see Attachment III-a, were scaled as (55 9.4 0), (8.6 49.3 0), (-55 9.4 0), (-30.5 -46.5 0), and (30.5 -46.5 0) respectively, see Figure 5-2.

5.3 The Seven Tubes Inside One Canister

The (x y z) coordinates of the seven tubes containing 4 cans each, relative to the canister centerline, see Attachment III-b, were scaled as (14.85 12.45 0), (-0.36 19.05 0), (-14.73 11.85 0), (-18.3 -4.35 0), (-7.82 -17.1 0), (8.55 -16.74 0), and (18.6 -3.6 0) respectively, see Figure 5-3.

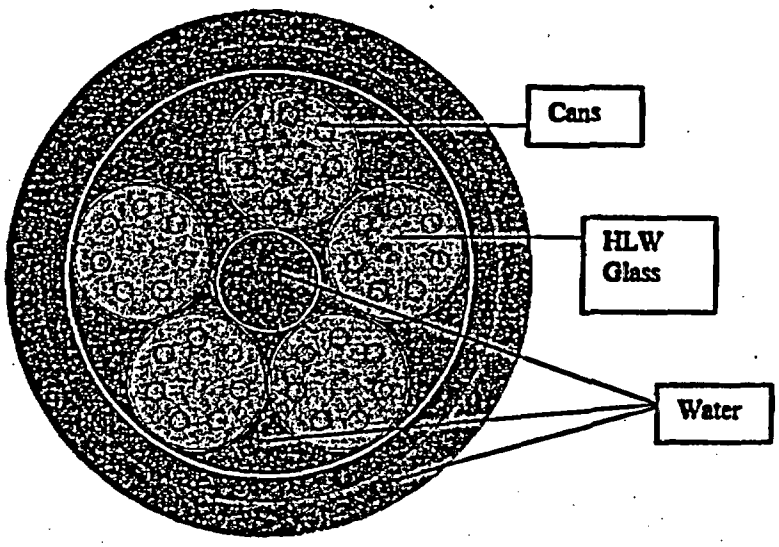

Figure 5-3. Ceramic Disc Cans Inside Canisters of the Waste Package

5.4 Material Densities

The model comprised the following materials and their corresponding density in g/cc except for water where the density is listed in atoms/barn cm (Ref. 7.1):

Material	Density
Ceramic	5.5 g/cc
HLW glass	2.85 g/cc
ASTM A 516 Carbon steel	7.832 g/cc
ASTM B 575 N06022 (Alloy 22)	8.69 g/cc
Water	1.0032-01 atoms/barn-cm
SS 304L	7.9 g/cc
SS 316	7.952 g/cc

5.5 Element MCNP ID and Atomic Weights

Attachment V and Reference 7.5 (see page G-6 of Ref. 7.5) are utilized for the corresponding isotope MCNP nuclide identification numbers.

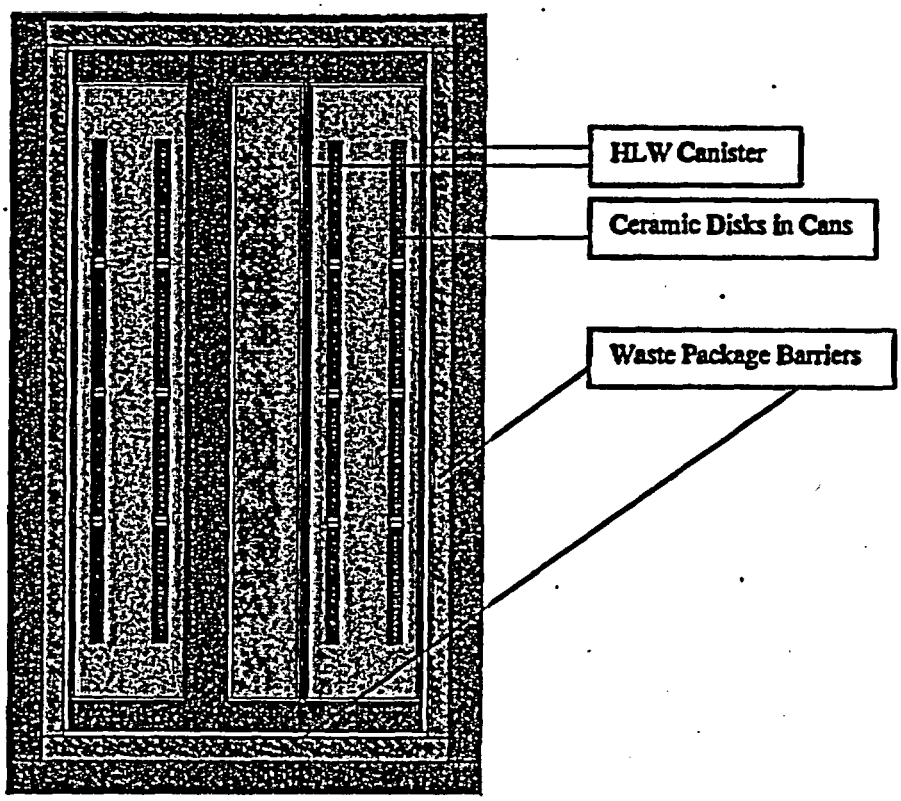

Figure 5-4. WP Section View Showing Four Stacked Cans Columns Inside HLW Canisters

5.6 Dimensions Used

The dimensions used, (see Attachment I), are:

Inner radius of WP	86.5 cm
Radius of inner barrier outer wall	88.5 cm
Radius of outer barrier outer wall	98.5 cm
Inner radius of central tube wall	21.18 cm
Outer radius of central tube wall	22.45 cm
Inner height (one-half)	152 cm
Inner barrier lid thickness	2.5 cm
Outer barrier lid thickness	11.0 cm

5.7 Ceramic Configuration and Composition

The immobilized plutonium in the ceramic discs, as given by the PIP 98-012 (Ref. 7.1), does not fill up the cans completely and leaves voids as shown in Figure 5-1. These voids were filled with water, (see Figure 5-5), to analyze the impact on the effective neutron multiplication factor, k_{eff}, as shown in Tables 6-3, 6-4, and 6-5. The ceramic composition contained the following various elements, including nuclides, and oxides: Ca, Hf, U, Ti, Pu-238, Gd-152, Gd-154, Gd-155, Gd-156, Gd-157, Gd-158, Gd-160, Pu-239, Pu-240, Am-241, and Pu-242.

5.8 Infinite Lattice and Pitch Variation Input

An infinite hexahedral lattice model was developed for the ceramic discs placed in the four stacked cans configuration. Figure 5-5 shows one stack of these four cans. The pitch, the distance between the centerlines of the adjacent cans inside the canister, was varied, and the effective neutron multiplication factor, k_{eff}, was calculated for three configurations: 1) Dry cans (no water) cases, 2) Flooded cans, 100% water density, cases, and 3) Varied water density cases. Eighteen computer runs for these infinite lattice cases, and two runs for the total WP, were made and the resulting k_{eff} values were tabulated in Section 6.

6. Results

These results should not be used for procurement, fabrication, or construction, and should be tracked as "To Be Verified", TBV, and controlled by appropriate procedures. Tables 6-1, 6-2, 6-3, and 6-4 show that the highest k_{eff} was reached when the pitch between the cans was 7.64 cm. At this pitch where the cans are almost touching, the highest concentration of the ceramic containing the immobilized plutonium is present. Thus, this pitch representing the highest k_{eff} was used to analyze the cases of Tables 6-1 and 6-4. These k_{eff} results are shown below in Tables 6-1; for the no water case, Table 6-2; for water outside of cans only; Table 6-3; for flooded 100% water density cases, and Table 6-4; for the varied water density cases. The output MCNP4B files for the cases shown below are found in 20 attachments, numbered VI through XXV, see Section 8.

The output files cases (input files echoed in the output files), impuydff and impuynff, for the overall waste package, dry and flooded cans cases, respectively, are given in Attachments XXIV and XXV. Substantial nuclides fission has taken place in the zones where both the ceramic and the HLW glass are located. An example of this is reflected in Table 140 of the computer run case impuynff. Thus, one computer warning that there was no fission in some of the larger universe cells of the model appears to be irrelevant. The results of the calculations for the overall k_{eff} are shown in Table 6-5.

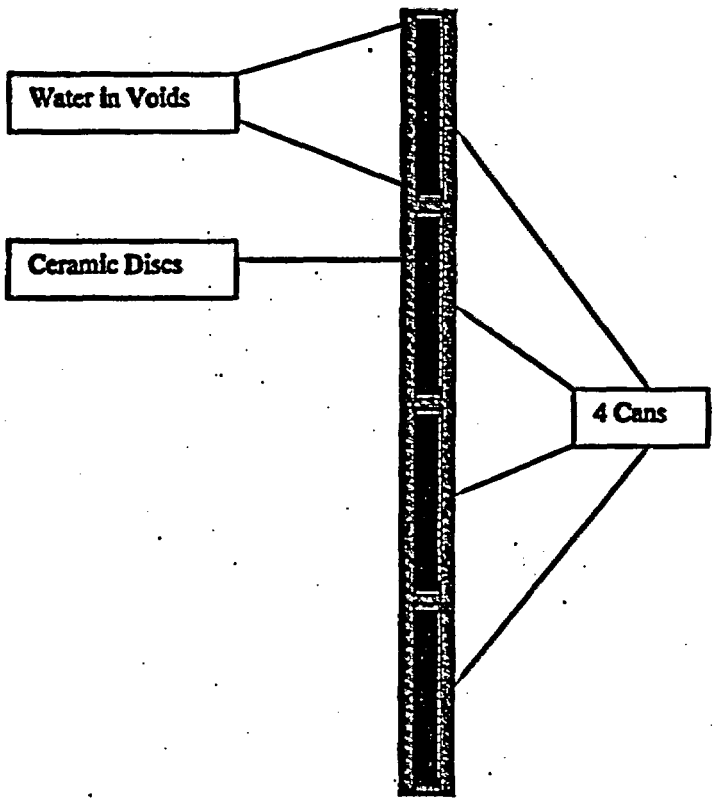

Figure 5-5. Cans Flooded With Water (One Cell of an Infinite Lattice)

Table 6-1. Dry Inside and Outside Cans (No Water)

Input Case Name	Pitch, (cm)	k_{eff}	$k_{eff} \pm 1\sigma$	$k_{eff} + 2\sigma$
ldnwf	7.64	0.86721	0.86721±0.00049	0.86819

Table 6-2. Dry Inside of Cans, 100% Water Outside

Input Case Name	Pitch, (cm)	k_{eff}	$k_{eff} \pm 1\sigma$	$k_{eff} + 2\sigma$
pd7.64f	7.64	0.53004	0.53004±0.00076	0.53156
pd8f	8	0.47985	0.47985±0.00072	0.48129
pd9f	9	0.36763	0.36763±0.00071	0.36953
pd10f	10	0.29124	0.29124±0.00062	0.29248
pd15f	15	0.13933	0.13933±0.00045	0.14023
pd20f	20	0.10543	0.10543±0.00039	0.10621

Table 6-3. Flooded 100% Density Water Inside of Can, 100% Density Water Outside

Input Case Name	Pitch, (cm)	k_{eff}	$k_{eff} \pm 1\sigma$	$k_{eff} + 2\sigma$
pw7.64f	7.64	0.49831	0.49831±0.00068	0.49967
pw8f	8	0.45192	0.45192±0.00064	0.45320
pw9f	9	0.35053	0.35053±0.00070	0.35193
pw10f	10	0.27874	0.27874±0.00061	0.27996
pw15f	15	0.13704	0.13704±0.00043	0.13790
pw20f	20	0.10545	0.10545±0.00036	0.10617

Table 6-4. Varied (%) Water Density, Similar Inside and Outside of Cans

Input Case Name	Pitch, (cm)	k_{eff}	$k_{eff} \pm 1\sigma$	$k_{eff} + 2\sigma$
pt1f, (1% water)	7.64	0.85312	0.85312±0.00055	0.85422
pt5f, (5% water)	7.64	0.81452	0.81452±0.00061	0.81574
pt10f, (10% water)	7.64	0.77908	0.77908±0.00055	0.78018
pt15f, (15% water)	7.64	0.74974	0.74974±0.00061	0.75069
pt20f, (20% water)	7.64	0.72299	0.72299±0.00064	0.72427

Table 6-5. Overall Multiplication Factor Results

Case Name	k_{eff}	$k_{eff} \pm 1\sigma$	$k_{eff} + 2\sigma$
impuydff	0.11407	0.11407±0.00018	0.11443
impuynff	0.12459	0.12459±0.00025	0.12509

7. References

7.1 *Plutonium Immobilization Project,* PIP 98-012, January 23, 1998. Data for Yucca Mountain TSPS, Rev 1, Lawrence Livermore National Laboratory.

7.2 *Characteristics Of Potential Repository Wastes,* DOE/RW-0184-R1, Volume 1, July 1992, US DOE Contract No. DE-AC05-840R21400.

7.3 *Material Compositions and Number Densities for Neutronics Calculations,* Document Identifier (DI) Number: BBA000000-01717-0200-00002 REV 00, Civilian Radioactive Waste Management System (CRWMS) Management and Operating Contractor (M&O).

7.4 *Software Qualification Report for MCNP Version 4B2,* A General Monte Carlo N-Particle Transport Code, DI Number: 30033-2003 REV 00, CRWMS M&O.

7.5 Briesmeister, Judith F., Ed., *MCNP- A General Monte Carlo N-Particle Transport Code*, Los Alamos National Laboratory (LANL), LA-12625M, Version 4B, March 1997.

7.6 Dahdouh, Bassam J., MOL 19980715.0397, *Criticality Evaluation of Plutonium Disposition Ceramic Waste Form: Intact Mode*, CRWMS M&O 1998. Electronic Attachments for DI Number: BBA000000-01717-0210-00012 REV 00. Colorado Backup Tape, Las Vegas, NV.

8. Attachments

Attachment I	5-HLW Canister Waste Package, 12 pages, TBV
Attachment II	Can-in-Canister Assembly
Attachment III-a	Coordinates scale of the five settled canisters, 1 page
Attachment III-b	Coordinates scale of the seven stacks of cans, 1 page
Attachment IV	Ceramic Spreadsheet, cer-base.xls, 3 pages
Attachment V	MCNP ID Table, 3 pages

A magnetic Tape contains the following 20 attachments, see page 15, created on a HP Series 9000 work station.

Attachment VI	Results output file for case pd7.64f
Attachment VII	Results output file for case pd8f
Attachment VIII	Results output file for case pd9f
Attachment IX	Results output file for case pd10f
Attachment X	Results output file for case pd15f
Attachment XI	Results output file for case idnwf
Attachment XII	Results output file for case pd20f
Attachment XIII	Results output file for case pw7.64f
Attachment XIV	Results output file for case pw8f
Attachment XV	Results output file for case pw9f
Attachment XVI	Results output file for case pw10f
Attachment XVII	Results output file for case pw15f
Attachment XVIII	Results output file for case pw20f
Attachment XIX	Results output file for case pt1f
Attachment XX	Results output file for case pt5f
Attachment XXI	Results output file for case pt10f
Attachment XXII	Results output file for case pt15f
Attachment XXIII	Results output file for case pt20f
Attachment XXIV	Results output file for case impuydff
Attachment XXV	Results output file for case impuynff

The magnetic tape contains the following 20 attachments created on a HP Series 9000 work station and transferred to a PC desktop computer. This tape was written using the Colorado Model T1000e External Parallel Port Backup System for personal computers. The files representing the following attachments are on a Colorado backup tape having an identification MOL 19980715.0397 (Ref. 7.6).

Magnetic Tape Table of Contents

Case File Name	HP 9000 File Size	File Type	Date and Time	HP Work Station File Name
idnwf	229062	ASCII	7/28/98, 8:32 AM	home/dahdouh/mcnp/ idnwf
pd7.64f	227215	ASCII	7/15/98, 9:54 AM	home/dahdouh/mcnp/ pd7.64f
pd8f	226148	ASCII	7/15/98, 9:54 AM	home/dahdouh/mcnp/ pd8f
pd9f	227312	ASCII	7/15/98, 9:55 AM	home/dahdouh/mcnp/ pd9f
pd10f	226342	ASCII	7/15/98, 9:55 AM	home/dahdouh/mcnp/ pd10f
pd15f	227624	ASCII	7/15/98, 9:55 AM	home/dahdouh/mcnp/ pd15f
pd20f	227936	ASCII	7/15/98, 9:55 AM	home/dahdouh/mcnp/ pd20f
pw7.64f	227975	ASCII	7/15/98, 9:55 AM	home/dahdouh/mcnp/ pw7.64f
pw8f	227975	ASCII	7/15/98, 9:55 AM	home/dahdouh/mcnp/ pw8f
pw9f	226811	ASCII	7/15/98, 9:55 AM	home/dahdouh/mcnp/ pw9f
pw10f	227005	ASCII	7/15/98, 9:56 AM	home/dahdouh/mcnp/ pw10f
pw15f	228287	ASCII	7/15/98, 9:56 AM	home/dahdouh/mcnp/ pw15f
pw20f	228502	ASCII	7/15/98, 9:56 AM	home/dahdouh/mcnp/ pt20f
pt1f	229223	ASCII	7/15/98, 9:56 AM	home/dahdouh/mcnp/ pt1f
pt5f	227742	ASCII	7/15/98, 9:56 AM	home/dahdouh/mcnp/ pt5f
pt10f	228583	ASCII	7/15/98, 9:57 AM	home/dahdouh/mcnp/ pt10f
pt15f	227227	ASCII	7/15/98, 9:57 AM	home/dahdouh/mcnp/ pt15f
pt20f	228599	ASCII	7/15/98, 9:57 AM	home/dahdouh/mcnp/ pt20f
impuydff	363901	ASCII	7/17/98, 1:39 PM	home/dahdouh/mcnp/ impuydff
impuynff	364252	ASCII	7/17/98, 1:39 PM	home/dahdouh/mcnp/ impuynff

ATTACHMENT I
PAGE I-1

HEA000000-01717-0210-00012 REV 00

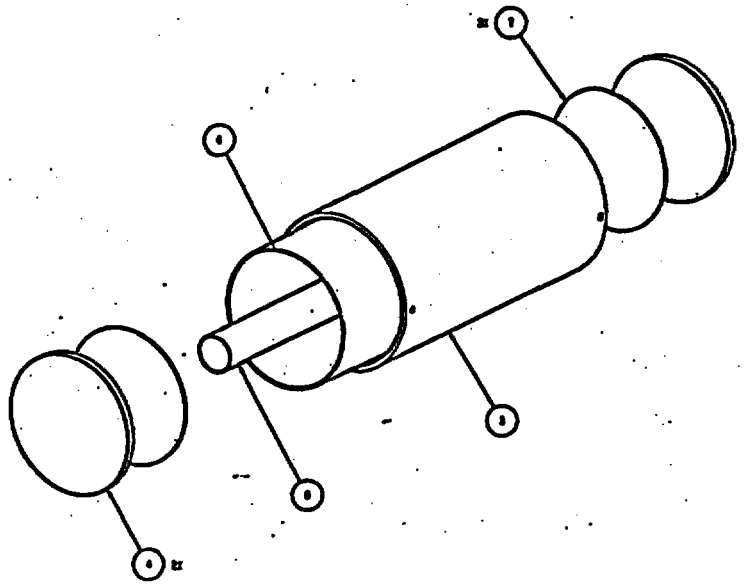

FIELD CONTROLLED COPY
NO. 183/152
THIS IS A RED STAMP

9/29/97
EFFECTIVE DATE

RECEIVED
OCT 6 1997
BY DRC

DO NOT SCALE FROM THIS DRAWING

U.S. DEPARTMENT OF ENERGY

S-HON LEVEL WASTE DISPOSAL CONTAINER

ATTACHMENT I
PAGE I-2

BDA000000-01717-0230-00012 REV 00

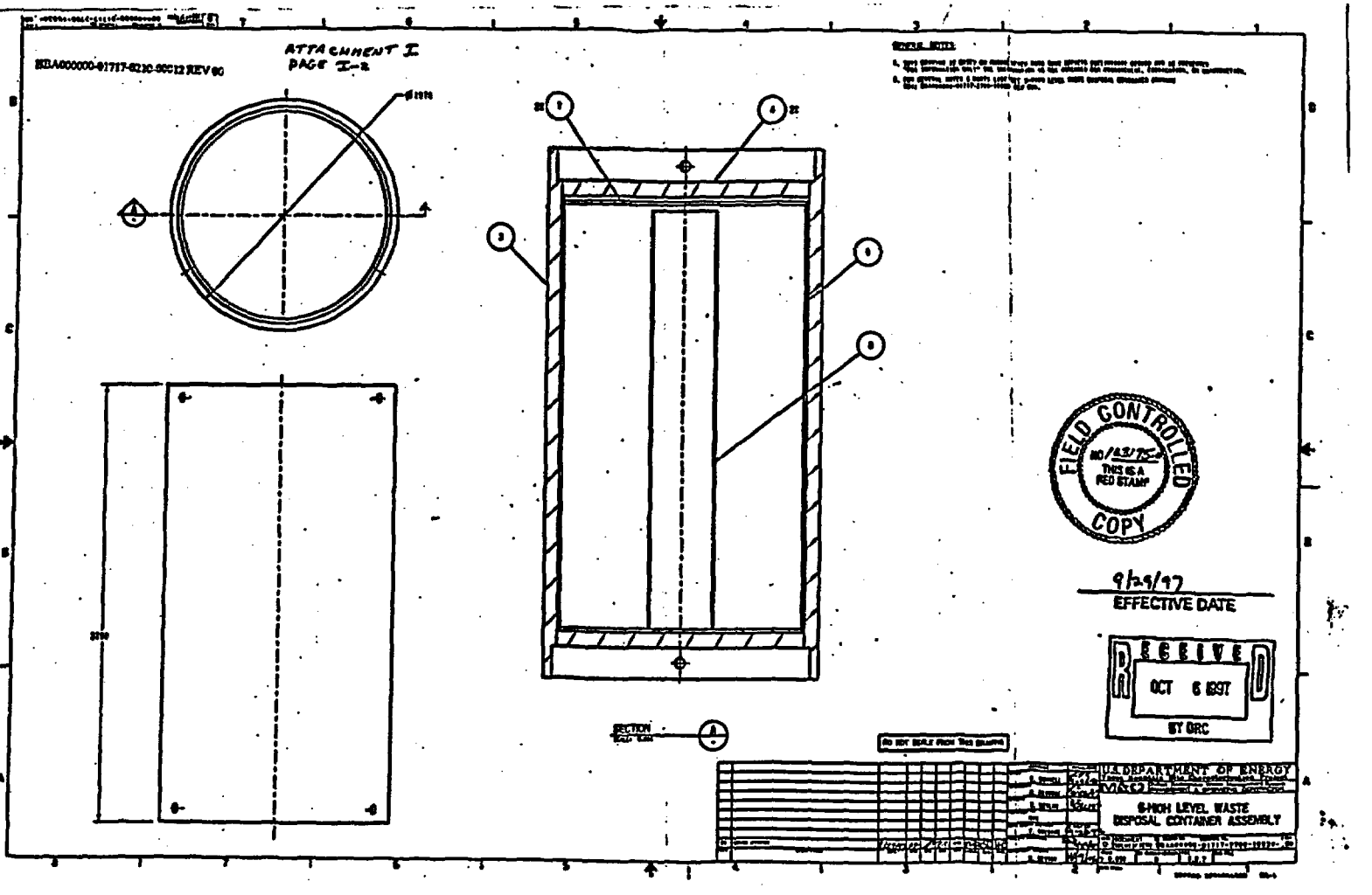

FIELD CONTROLLED COPY
NO/ASTRE
THIS IS A RED STAMP

9/29/97
EFFECTIVE DATE

RECEIVED
OCT 6 1997
BY DRC

ATTACHMENT I

PAGE I-3

BBA000000-01717-0210-00012 REV 00

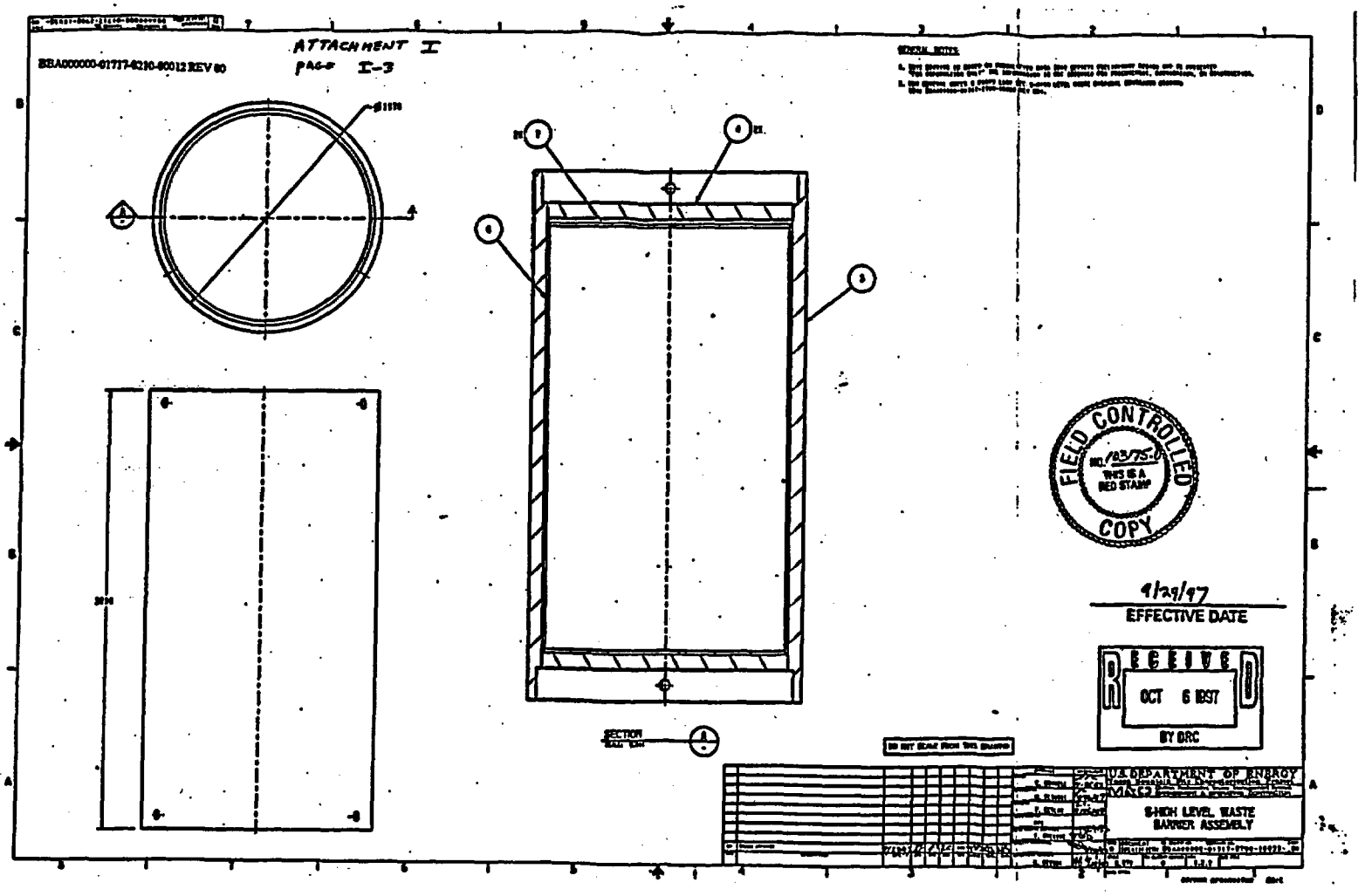

ATTACHMENT I
PAGE I-4

ESA000000-01717-0210-00012 REV 00

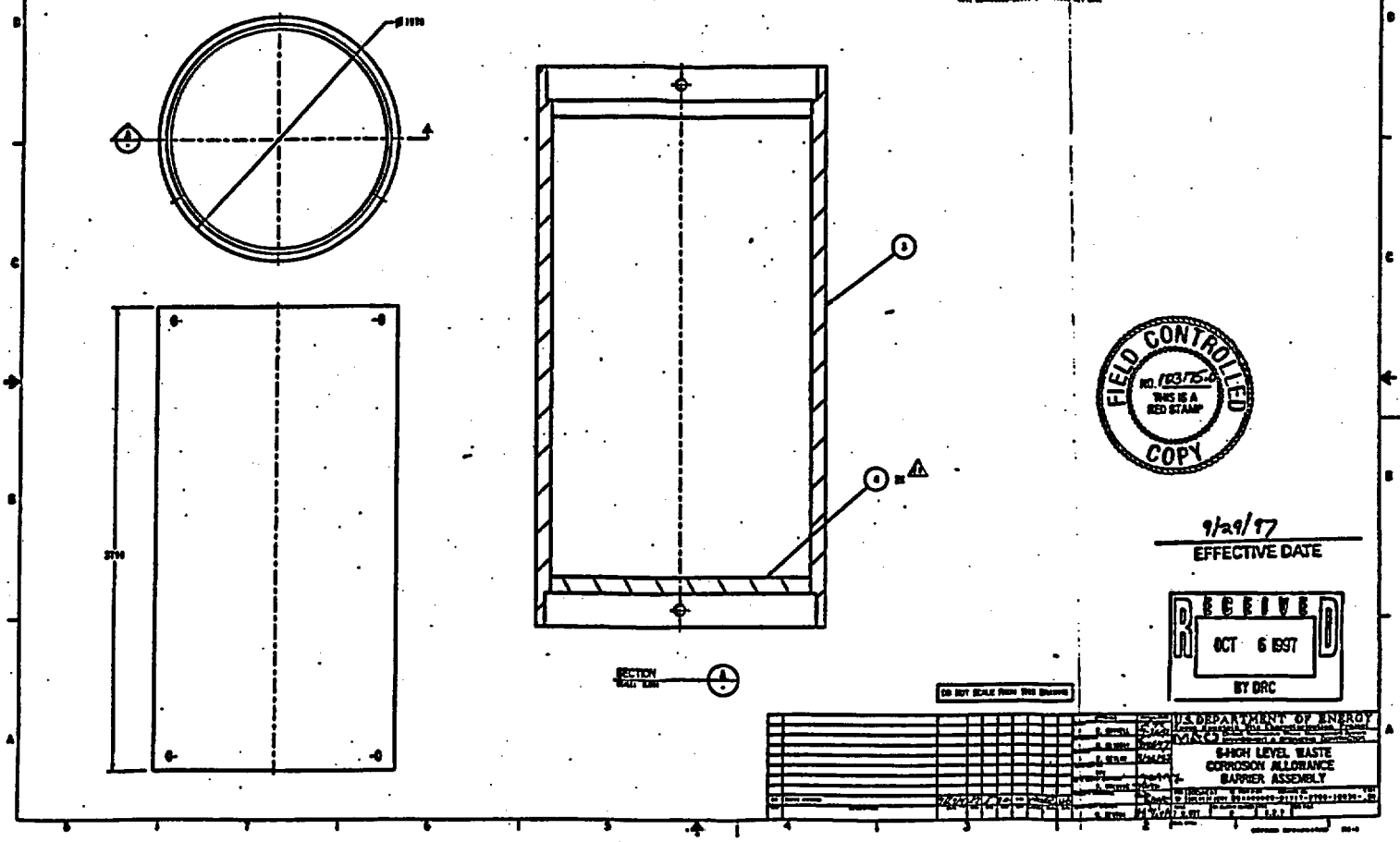

FIELD CONTROLLED COPY
NO. 103/75-0
THIS IS A RED STAMP

9/29/97
EFFECTIVE DATE

RECEIVED
OCT 6 1997
BY DRC

ATTACHMENT I
PAGE I-5

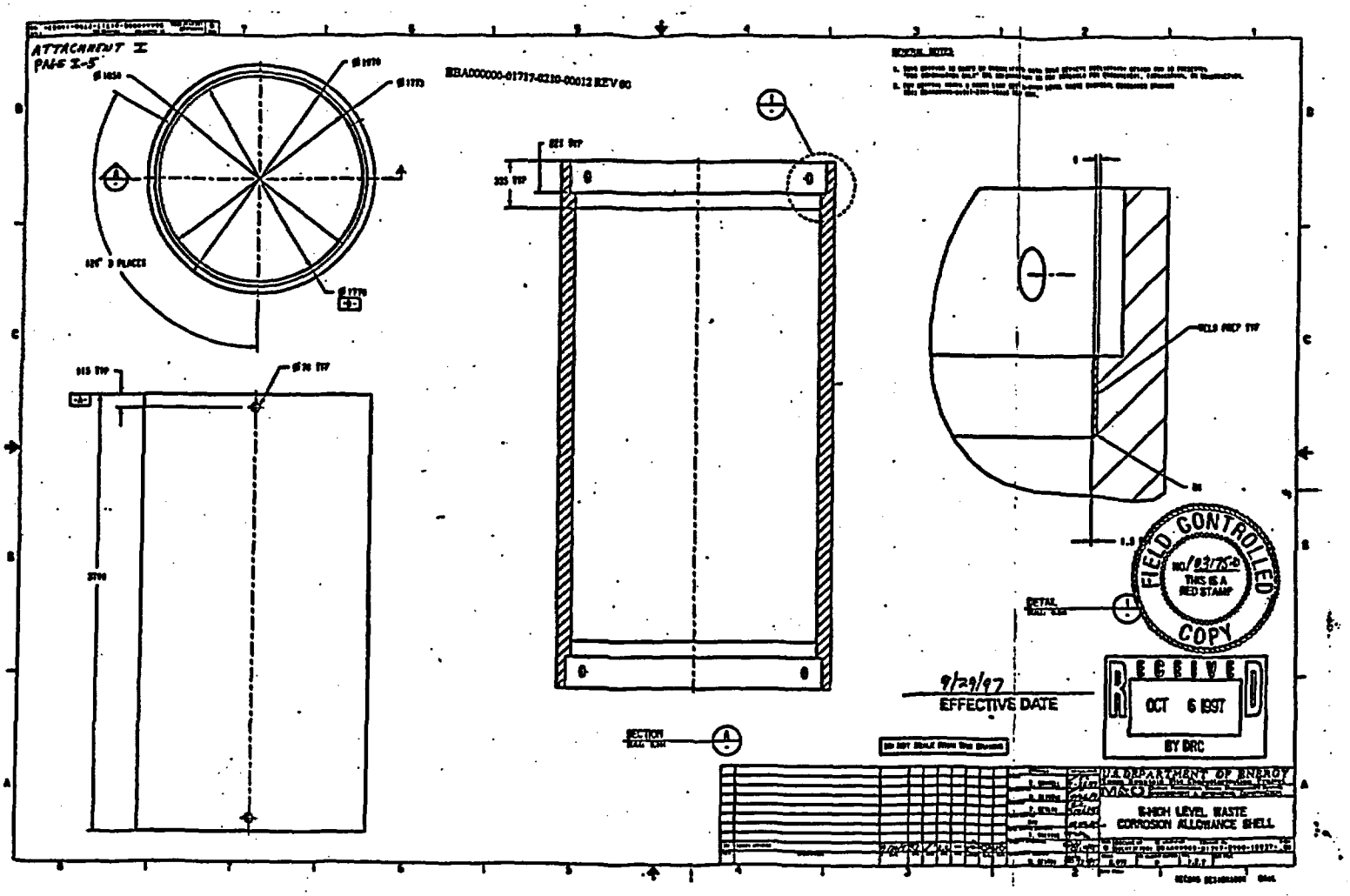

ATTACHMENT I
PAGE I-6

ESA000000-01717-0210-00012 REV 00

GENERAL NOTES

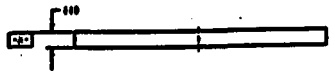

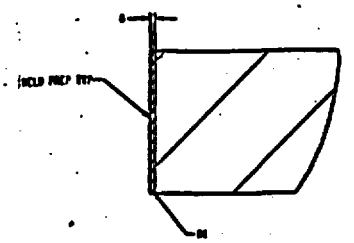

DETAIL

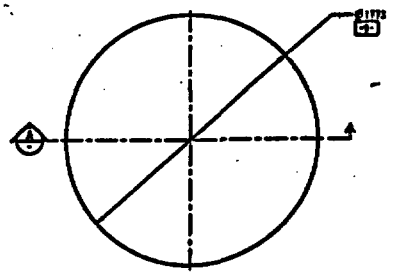

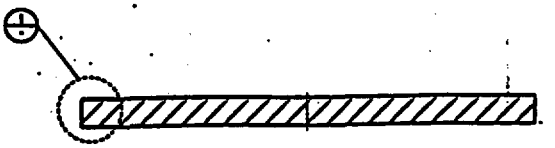

SECTION

FIELD CONTROLLED COPY
NO. 163/75
THIS IS A RED STAMP

9/29/97
EFFECTIVE DATE

RECEIVED
OCT 6 1997
BY DRC

DO NOT SCALE FROM THIS DRAWING

U.S. DEPARTMENT OF ENERGY
WIPP

S-HIGH LEVEL WASTE
CORROSION ALLOWANCE SHELL LID

ATTACHMENT I
PAGE I-7

ESAC00000-01717-0210-00012 REV 00

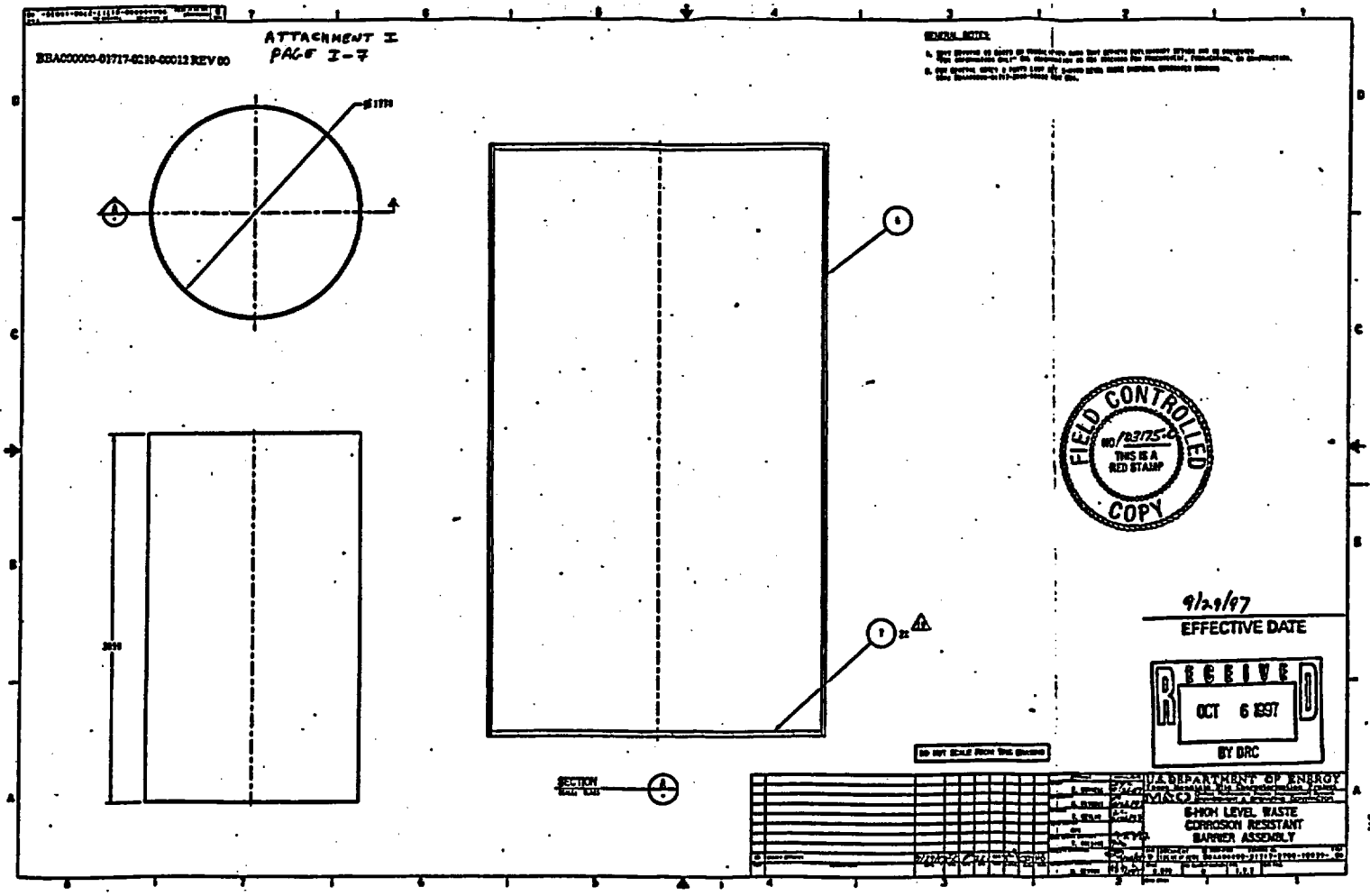

ATTACHMENT I
PAGE I-3

HS.A000000-01717-0210-00012 REV 00

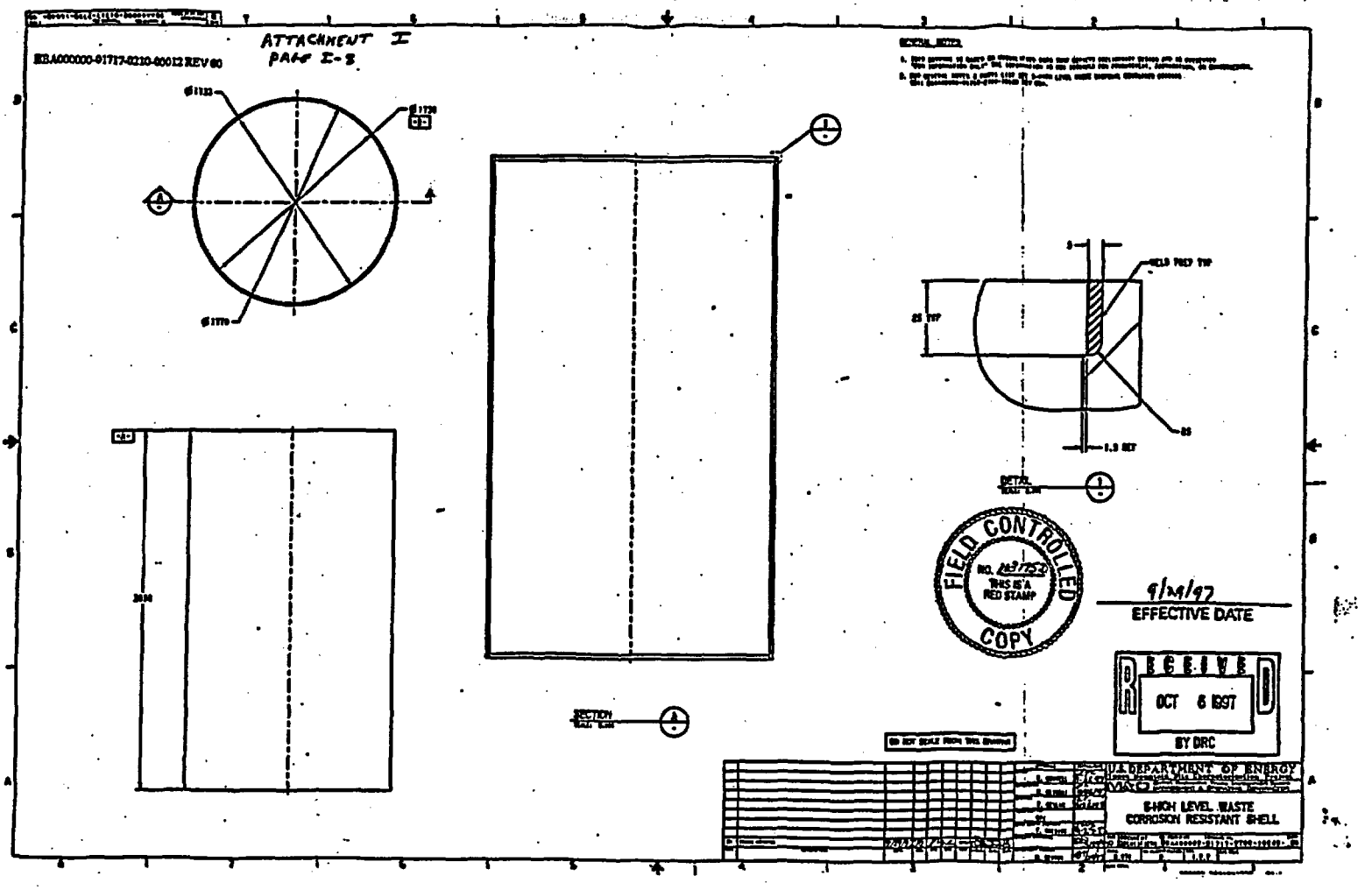

ATTACHMENT I
PAGE I-9

BBA000000-01717-0210-00012 REV 00

GENERAL NOTES

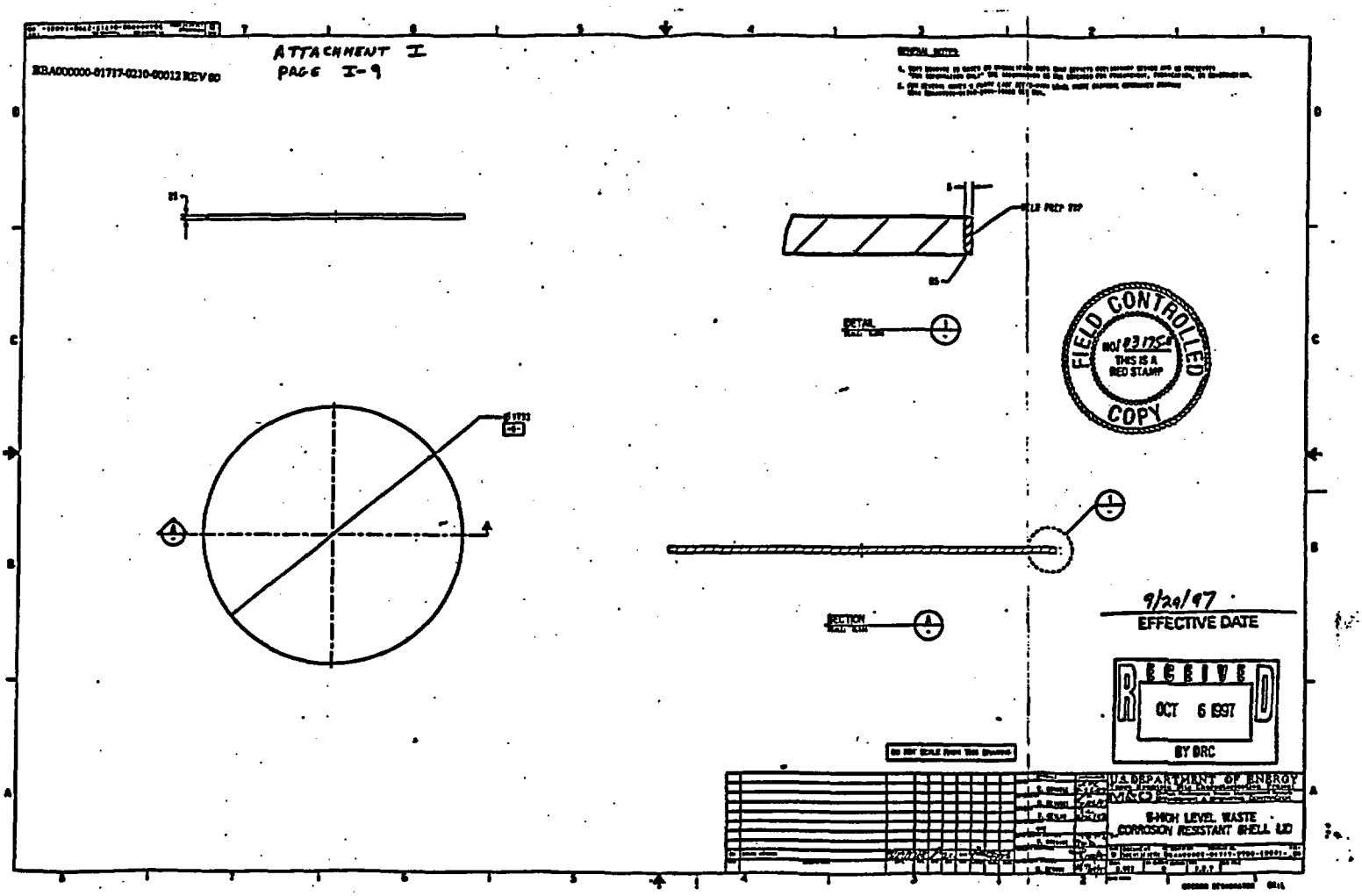

ATTACHMENT I
PAGE I-10

BBA000000-01717-6210-00012 REV 00

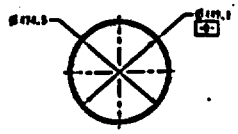

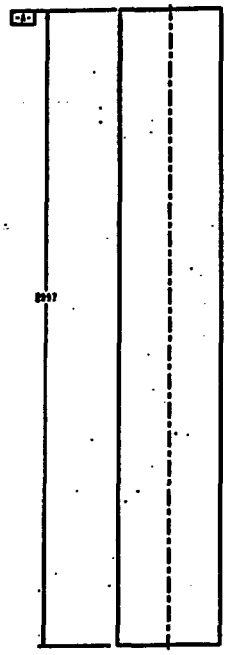

GENERAL NOTES:

1. [illegible]
2. [illegible]

FIELD CONTROLLED COPY
NO. 1 2 3 4 5 6
THIS IS A RED STAMP

9/29/97
EFFECTIVE DATE

RECEIVED
OCT 6 1997
BY DRC

DO NOT SCALE FROM THIS DRAWING

U.S. DEPARTMENT OF ENERGY
WIPP
S-HIGH LEVEL WASTE CANISTER GUIDE TUBE

ATTACHMENT I
PAGE I-11

BBA000000-01717-0210-00012 REV 00

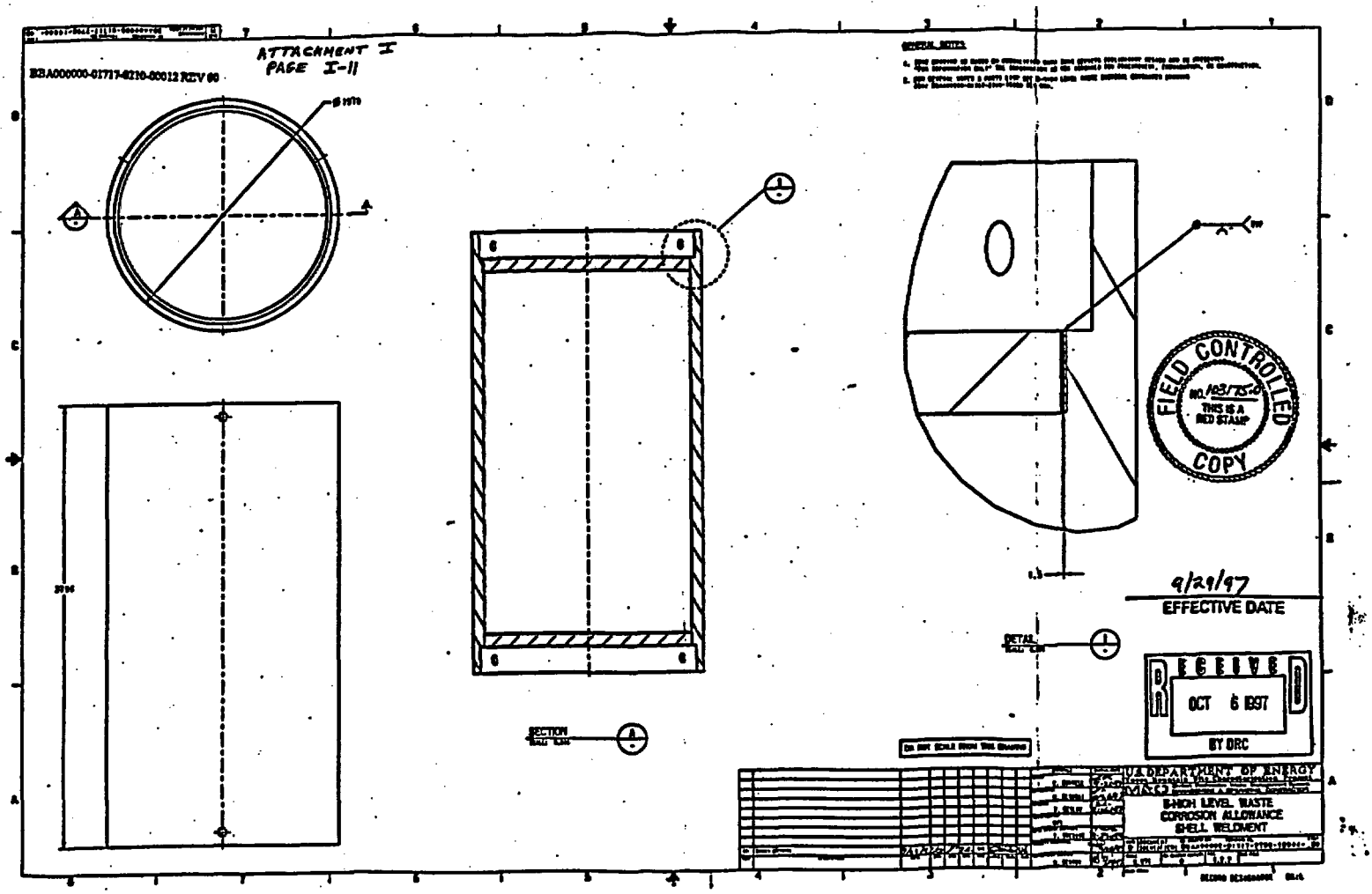

ATTACHMENT I
PAGE I-12

HBA000000-01717-0210-00012 REV 00

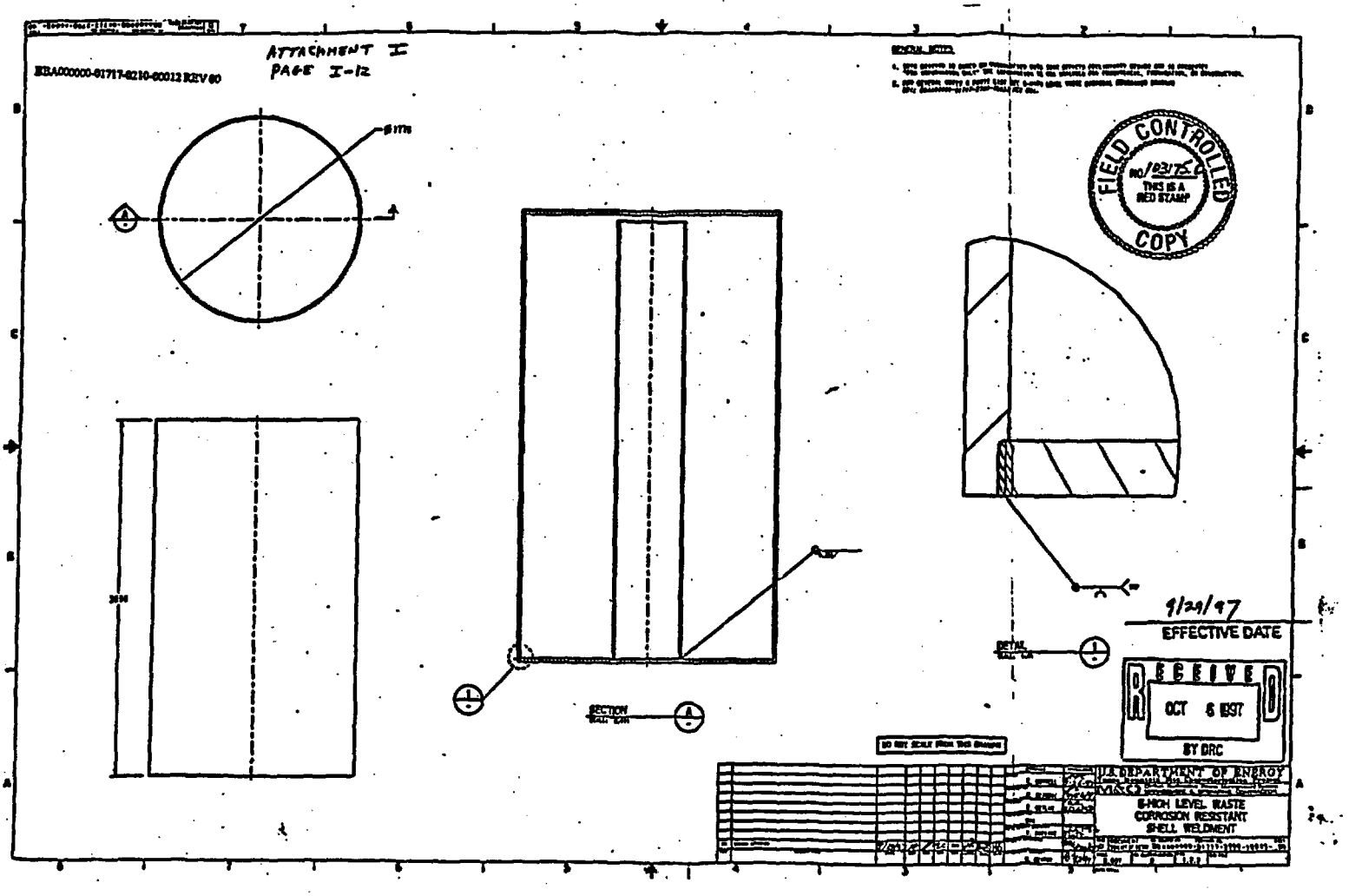

ATTACHMENT II
PAGE II-1

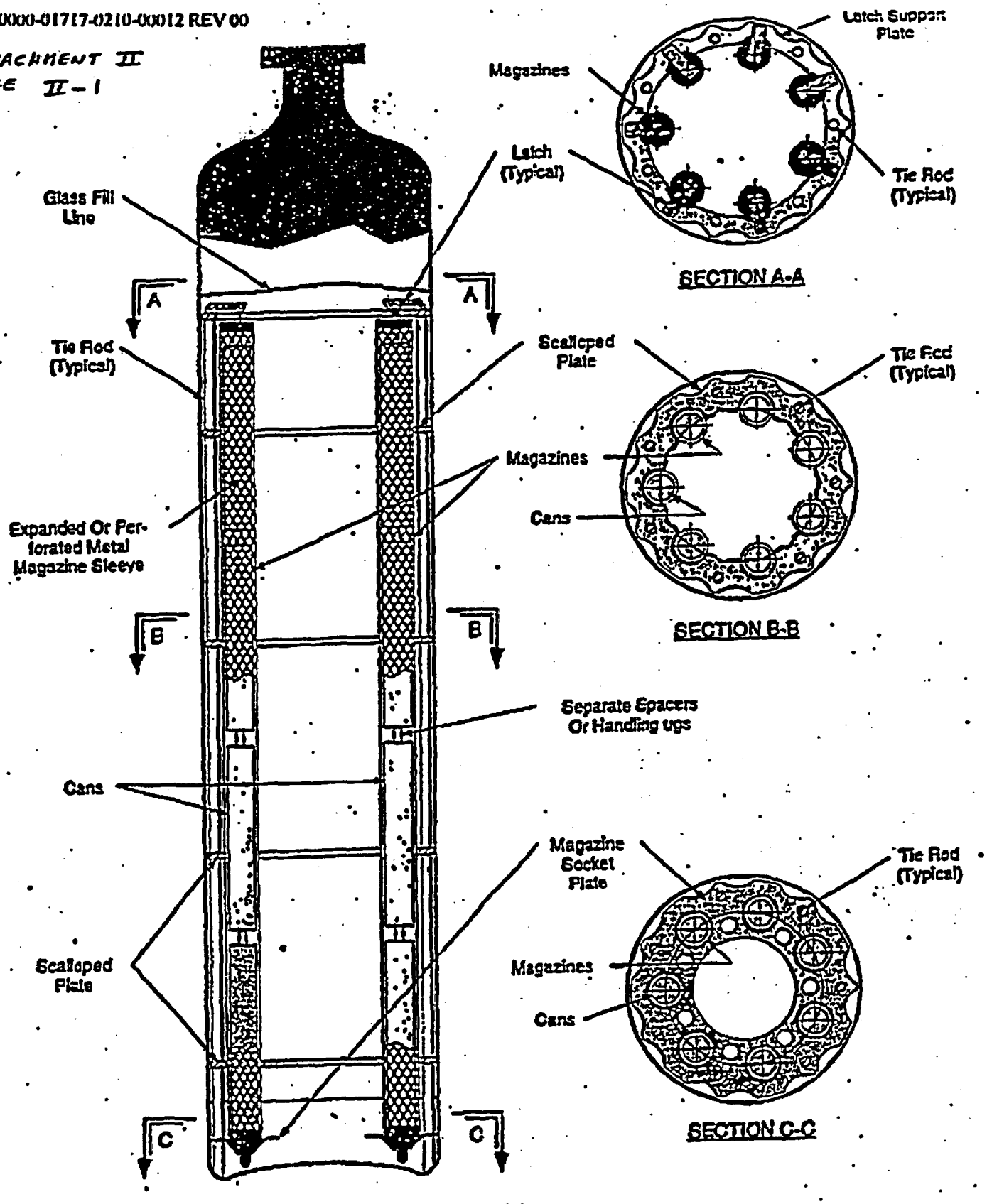

Figure 2.0(a)
Can-In-Canister Assembly

Scale 1:10 cm
Dwp =WP ID=177.3 cm
Dc1=Canister OD=60.96 cm
Coordinates of the 5 canisters:
1-(55 9.4 0)
2- (8.6 49.3 0)
3- (-55 9.4 0)
4- (-30.5 -46.5 0)
5- (30.5 -46.5 0)

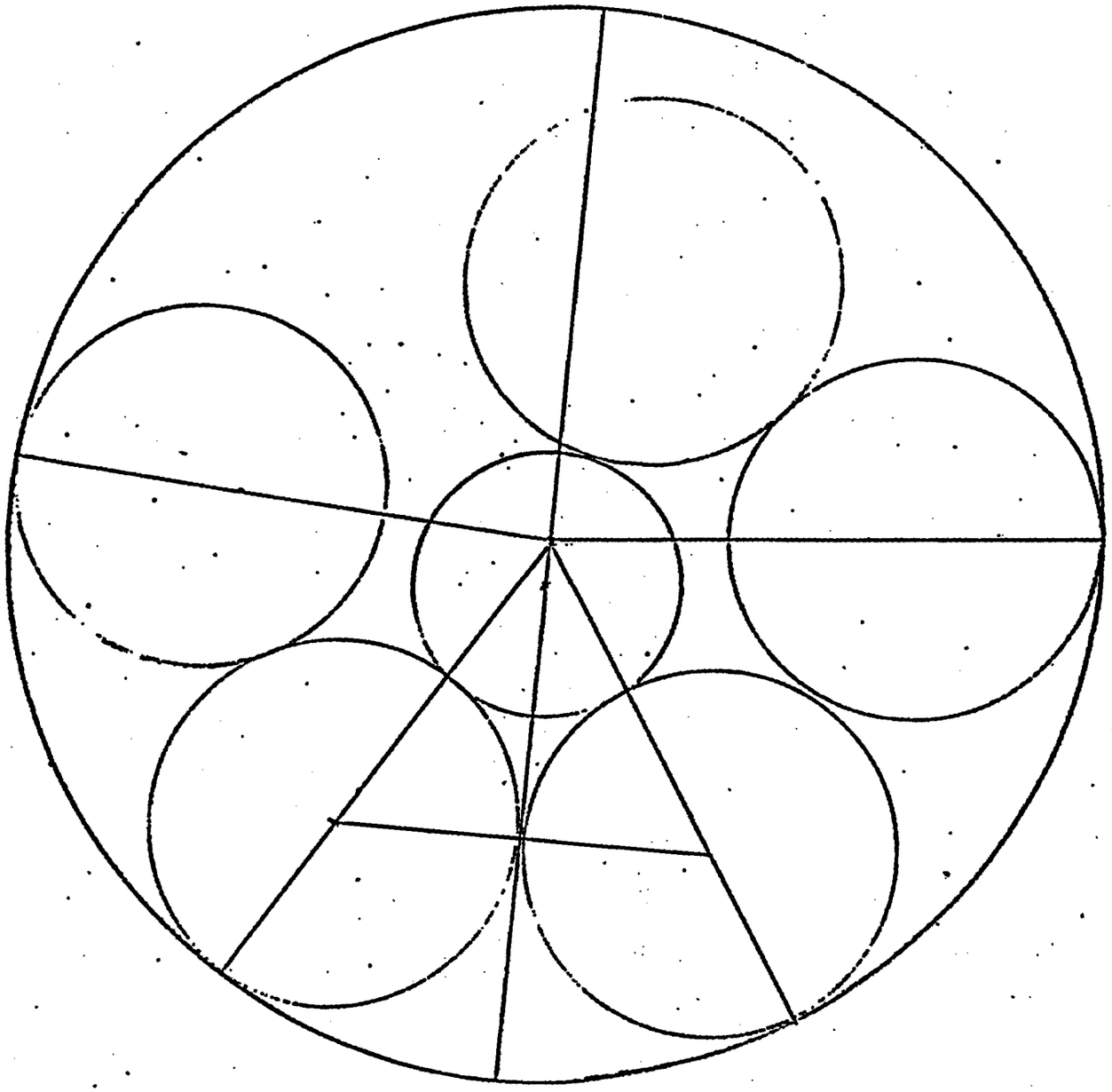

Scale 1=3 cm
Dcan= Can Diameter=7.62 cm
Rcan= Can Radius=3.81 cm
Dc1=Canister OD =60.96 cm
A1=Model buffer zone=2*883*3cm=5.298cm
A2=Dc1-A1=55.662 cm
C1=Center to outer can shortest distance=15 cm
C2=Center to center can =19.35 cm
Coordinates of the seven stacks:
1- (14.85 12.45 0)
2- (-0.36 19.05 0)
3- (-14.73 11.85 0)
4. (-18.3 -4.35 0)
5. (-7.82 -17.1 0)
6. (8.55 -16.74 0)
7. (18.6 -3.6 0)

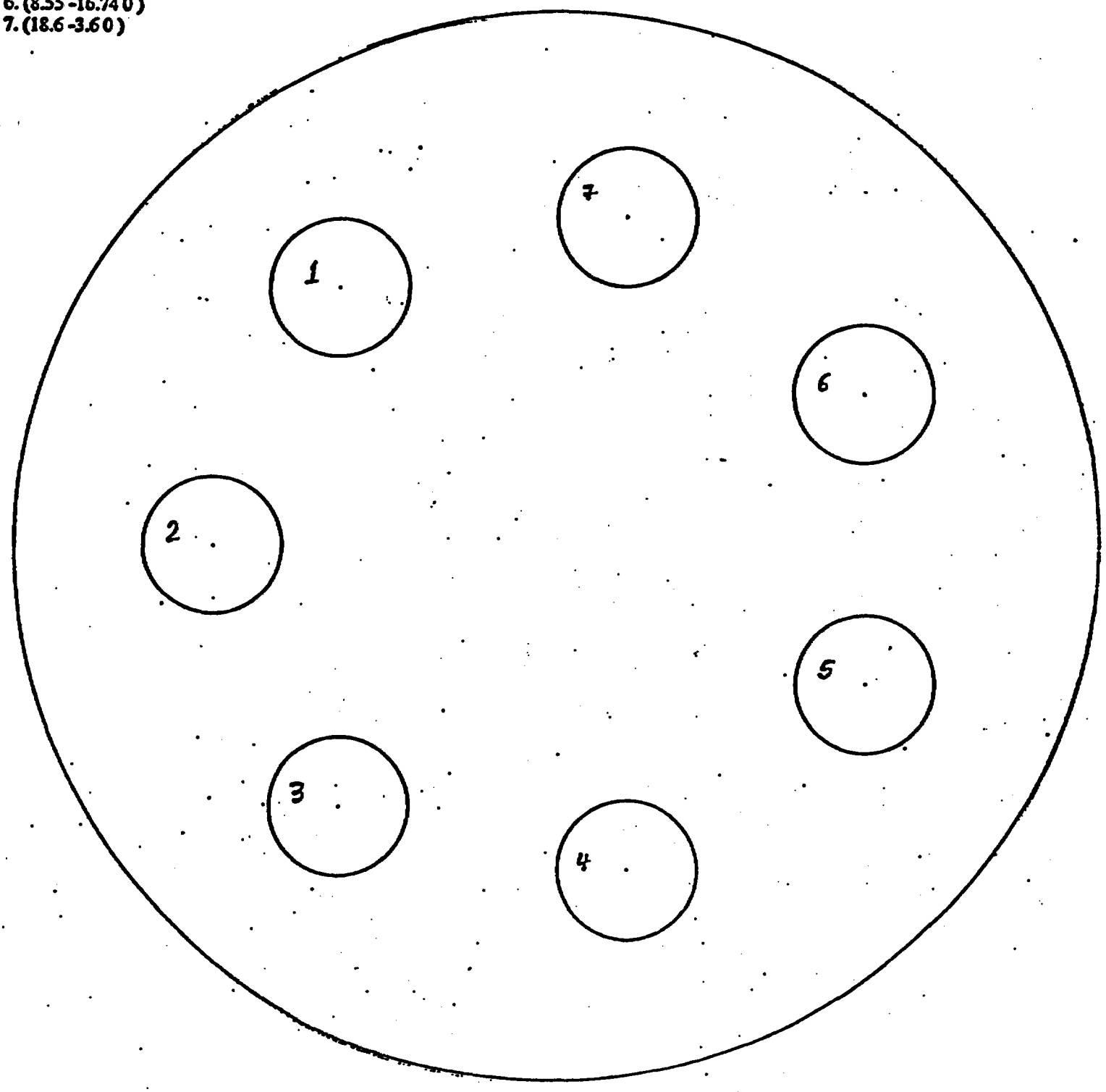

	A	B	C	D	E	F	G
3	Oxide	Wt. %	Atomic Mass, 1'st	MCNP ID, 1'st	Atomic Mass, 2,nd	Wt. 1 mole	
4	CaO	10	40.08	20000.50C	15.994915	56.074915	
5	HfO2	10.6	178.49	72000.50C	31.98983	210.47983	
6	UO2	23.7	238.05077	92238.50C	31.98983	270.0406	
7	PuO2	11.9	239.156738	see d16 to d20	31.98983	271.146568	
8	Gd2O3	7.9	314.5	see f16 to f20	47.984745	362.484745	MCNP ID,
9	TiO2	35.9	47.9	22000.50C	31.98983	79.88983	8016.50C
10		100					
11							
12			Pu total wt %		10.49603985		
13							
14	Isotope wt % 17 ton case, year 2010, ref PIP, page 15, table 4.3						
15			wt % in Ceramic	MCNP ID	Pu Eff AL Wt.	Gd Isotope	MCNP ID
16	Pu 238	0.02	0.002099208	94238.50C	0.047609902	Gd 152	64152.50C
17	Pu 239	90.59	9.508382498	94239.55C	216.5573391	Gd 154	64154.50C
18	Pu 240	8.41	0.882716951	94240.50C	20.18853148	Gd 155	64155.50C
19	(Am+Pu)241	0.89	0.093414765	95241.50C	2.145404765	Gd156	64156.50C
20	Pu 242	0.09	0.009446436	94242.50C	0.217852853	Gd157	64157.50C
21					239.156738	Gd158	64158.50C
22						Gd160	64160.50C
23							
24	MCNP ID	Wt. %					
25	20000.50C	7.14768105					
26	72000.50C	8.98895633					
27	92238.50C	20.892426					
28	64152.50C	0.01324237					
29	64154.50C	0.14625548					
30	64155.50C	0.99940103					
31	64156.50C	1.39119546					
32	64157.50C	1.07044509					
33	64158.50C	1.70988216					
34	64160.50C	1.52381789					
35	22000.50C	21.6247673					
36							

	A	B	C	D	E	F	G
3	Oxide	Wt. %	Atomic Mass, 1'st	MCNP ID, 1'st	Atomic Mass, 2,nd	Wt. 1 mole	
4	CaO	10	40.08	20000.50C	15.994915	56.074915	
5	HfO2	10.6	178.49	72000.50C	31.98983	210.47983	
6	UO2	23.7	238.05077	92238.50C	31.98983	270.0406	
7	PuO2	11.9	239.156738	see d16 to d20	31.98983	271.146568	
8	Gd2O3	7.9	314.5	see f16 to f20	47.984745	362.484745	MCNP ID,
9	TiO2	35.9	47.9	22000.50C	31.98983	79.88983	8016.50C
10		100					
11							
12			Pu total wt %		10.49603985		
13							
14	Isotope wt % 17 ton case, year 2010, ref PIP, page 15, table 4.3						
15			wt % in Ceramic	MCNP ID	Pu Eff AL Wt.	Gd isotope	MCNP ID
16	Pu 238	0.02	0.002099208	94238.50C	0.047609902	Gd 152	64152.50C
17	Pu 239	90.59	9.508362498	94239.55C	216.5573391	Gd 154	64154.50C
18	Pu 240	8.41	0.882716951	94240.50C	20.18853148	Gd 155	64155.50C
19	(Am+Pu)241	0.89	0.093414755	95241.50C	2.145404755	Gd156	64156.50C
20	Pu 242	0.09	0.009446436	94242.50C	0.217852853	Gd157	64157.50C
21					239.156738	Gd158	64158.50C
22						Gd160	64160.50C
23							
24	MCNP ID	Wt. %					
25	20000.50C	7.14758105					
26	72000.50C	8.98895833					
27	92238.50C	20.692426					
28	64152.50C	0.01324237					
29	64154.50C	0.14625548					
30	64155.50C	0.99940103					
31	64156.50C	1.39119546					
32	64157.50C	1.07044509					
33	64158.50C	1.70988216					
34	64160.50C	1.52381789					
35	22000.50C	21.5247873					
36							

	A	B	C	D	E	F	G
37							
38	94238.50C	0.00209921					
39	94239.55C	9.5083625					
40	94240.60C	0.68271695					
41	95241.60C	0.09341476					
42	94242.60C	0.00944644					
43	8016.60C	24.09601					
44	Total Wt. %	100					

	H	I	J	K	L
3	wt %, 1st element	wt % Oxygen			
4	7.147581053	2.852418947			
5	8.988956329	1.611043671			
6	20.89242599	2.807574013			
7	10.49603985	1.403960152			
8	6.854219479	1.045780521			
9	21.5247673	14.3752327			
10	75.90398999	24.09601001			
11					
12					
13					
14					
15	Wt %*		Wt % in Ceramic		
16	0.001932	0.00028187	0.013242365		
17	0.021338	0.003113119	0.146255481		
18	0.145808	0.021272736	0.999401033		
19	0.202969	0.02961227	1.391195485		
20	0.156173	0.022784943	1.070445089		
21	0.249461	0.036395245	1.709862155		
22	0.222318	0.032435203	1.52381789		
23	0.999999	0.145895388	6.854219479		
24					
25	*Ref:GE Nuclear Energy, Nuclides and Isotopes, 14'th edition				
26	U-238 assumed to be 100% in UO2 because U-235 content is insignificant				
27					
28					
29					
30					
31					
32					
33					
34					
35					
36					

4.1.2 List of Isotope Atomic Weights
Reference 5.16, Appendix C, Page 941 - 978

	Element	Symbol	Isotope	MCNP ID	Atomic Weight
1	Hydrogen	H	H-1	1001.50C	1.00782519
		D	H-2	1002.55C	2.01410222
		T	H-3	1003.50C	3.01604971
2	Helium	He	natural	2000.01C	4.0026
		He	He-4	2004.50C	4.00260312
3	Lithium	Li	Li-6	3006.50C	6.0151247
		Li	Li-7	3007.55C	7.0160039
4	Beryllium	Be	Be-9	4009.50C	9.0121855
5	Boron	B	B-10	5010.50C	10.0129388
		B	B-11	5011.56C	11.0093053
6	Carbon	C	natural	6000.50C	12.01115
		C	C-12	6012.50C	12.0000
7	Nitrogen	N	N-14	7014.50C	14.00307439
8	Oxygen	O	O-16	8016.50C	15.994915
9	Fluorine	F	F-19	9019.50C	18.9984046
11	Sodium	Na	Na-23	11023.50C	22.9897707
12	Magnesium	Mg	natural	12000.50C	24.312
13	Aluminum	Al	Al-27	13027.50C	26.9815389
14	Silicon	Si	natural	14000.50C	28.086
15	Phosphorus	P	P-31	15031.50C	30.9737647
16	Sulfur	S	S-32	16032.50C	31.9720737
17	Chlorine	Cl	natural	17000.50C	35.452
19	Potassium	K	natural	19000.50C	39.102
20	Calcium	Ca	natural	20000.50C	40.08
22	Titanium	Ti	natural	22000.50C	47.9
23	Vanadium	V	natural	23000.50C	50.942
24	Chromium	Cr	natural	24000.50C	51.996
25	Manganese	Mn	Mn-55	25055.50C	54.9380503
26	Iron	Fe	natural	26000.55C	55.847
27	Cobalt	Co	Co-59	27059.50C	58.933189
28	Nickel	Ni	natural	28000.50C	58.71
29	Copper	Cu	natural	29000.50C	63.54
30	Zinc	Zn	natural	30000.50C	65.37
33	Arsenic	As	As-75	33075.35C	74.9215964
38	Strontium	Sr	natural	38000.50C	87.62
40	Zirconium	Zr	natural	40000.50C	91.22
41	Niobium	Nb	Nb-93	41093.50C	92.906382
42	Molybdenum	Mo	natural	42000.50C	95.94
		Mo	Mo-95	42095.50C	94.905839
43	Technetium	Tc	Tc-99*	43099.50C	98.90627501*

4.1.2 List of Isotope Atomic Weights (Continued)

	Element	Symbol	Isotope	MCNP ID	Atomic Weight
44	Ruthenium	Ru	Ru-101	44101.50C	100.905576
45	Rhodium	Rh	Rh-103	45103.50C	102.905511
46	Palladium	Pd	natural	46000.50C	106.4
47	Silver	Ag	Ag-109	47109.50C	108.904756
48	Cadmium	Cd	natural	48000.50C	112.4
49	Indium	In	natural	49000.50C	114.82
50	Tin	Sn	natural	50000.35C	118.69
55	Cesium	Cs	Cs-133	55133.50C	132.905355
		Cs	Cs-135	55135.50C	134.90577
56	Barium	Ba	natural	56000.50C	137.34
57	Lanthanum	La	natural	57000.50C	138.91
58	Cerium	Ce	natural	58000.50C	140.12
60	Neodymium	Nd	Nd-143	60143.50C	142.909779
		Nd	Nd-145	60145.50C	144.912538
62	Samarium	Sm	Sm-147	62147.50C	146.914867
		Sm	Sm-149	62149.50C	148.91718
		Sm	Sm-150	62150.50C	149.917276
		Sm	Sm-151	62151.50C	150.919919
		Sm	Sm-152	62152.50C	151.919756
63	Europium	Eu	Eu-151	63151.55C	150.919838
		Eu	Eu-153	63153.55C	152.921242
		Eu	Eu-154	63154.50C	153.923053
64	Gadolinium	Gd	natural	64000.35C	157.25
		Gd	Gd-155	64155.50C	154.922664
		Gd	Gd-157	64157.50C	156.924025
72	Hafnium	Hf	natural	72000.50C	178.49
73	Tantalum	Ta	Ta-181	73181.50C	180.948007
74	Tungsten	W	natural	74000.55C	183.85
82	Lead	Pb	natural	82000.50C	207.19
92	Uranium	U	U-233	92233.50C	233.039522
		U	U-234	92234.50C	234.040904
		U	U-235	92235.50C	235.043915
		U	U-236	92236.50C	236.045637
		U	U-238	92238.50C	238.05077
93	Neptunium	Np	Np-237	93237.55C	237.048056
94	Plutonium	Pu	Pu-238	94238.50C	238.049511
		Pu	Pu-239	94239.55C	239.052146
		Pu	Pu-240	94240.50C	240.053882
		Pu	Pu-241	94241.50C	241.056737
		Pu	Pu-242	94242.50C	242.058725
		Pu	Pu-243	94243.35C	243.061972

4.1.2 List of Isotope Atomic Weights (Concluded)

	Element	Symbol	Isotope	MCNP ID	Atomic Weight
95	Americium	Am	Am-241	95241.50C	241.056714
		Am	Am-242m	95242.50C	242.059502
		Am	Am-243	95243.50C	243.061367
96	Curium	Cm	Cm-243	96243.35C	243.06137
		Cm	Cm-245	96245.35C	245.065371
		Cm	Cm-248	96248.35C	248.0722