CRWMS/M&O

Calculation Cover Sheet

Complete only applicable items.

1. QA: L

2. Calculation Title CRC Reactivity Calculations for Quad Cities Unit 2			
3. Document Identifier (including Revision Number) B00000000-01717-0210-00010 REV 00			4. Total Pages 48
5. Total Attachments 20	6. Attachment Numbers - Number of pages in each See "Remarks" Block for Listing		MOL.19990322.0327
	Print Name	Signature	Date
7. Originator	M. J. Anderson	[signature]	8/26/98
8. Checker	D. P. Henderson/J. M. Scaglione	[signature] [signature]	8/24/98 8/24/98
9. Lead Design Engineer	D. A. Thomas	[signature]	08/25/98

10. Remarks

List of Attachments: I-7, II-13, III-43, IV-16, V-12, VI-41, VII-12, VIII-37, IX-15, X-16, XI-14, XII-9, XIII-59, XIV-241, XV-51, XVI-15, XVII-13, XVIII-28, XIX-21, XX-180

14 [signature] 08/26/98

The number of pages shown for Attachment I refers to the number of pages in the listing of the contents of the tapes.

PCG compliance review by W.E. Wallin 8/24/98

EA REVIEW OF SOFTWARE ROUTINES IN CEAP-S1-0 REV. 4 NOT APPLICABLE SINCE WORK WAS STARTED BEFORE 8/14/98.

Revision History

11. Revision No.	12. Date Approved	13. Description of Revision
00		Initial Release

Table of Contents

Title	Page
1. Purpose	6
2. Method	6
3. Assumptions	6
4. Use of Computer Software	7
4.1. Software Approved for QA Work	8
4.2. Software Routines	8
5. Calculation	9
5.1. Automation of MCNP Input Deck Creation	9
5.2. Data Acquisition	12
5.3. Process Framework	25
5.4. Automation Creation	28
5.5. Conventions for Surface, Cell and Material Numbering	38
5.6. Development of MCNP Input for Quad Cities Unit 1, BOL, Criticality Calculations	38
5.7. Development of MCNP Input for Quad Cities Unit 2, Cycle 13, Criticality Calculations	38
5.8. Development of MCNP Input for Quad Cities Unit 2, Cycle 14, Criticality Calculations	38
6. Results	40
6.1. Treatment of Gadolinia	41
6.2. Conclusions	46
7. References	47
8. Attachments	48

List of Tables

Table	Title	Page
Table 5-1.	Task List for Prototype Implementation	10
Table 5-2.	Task List for Production Software Routine Creation	11
Table 5-3.	Library Identifiers for Nuclides Used in Evaluations	21
Table 5-4.	List of Nuclides in "Principal Isotope" Set	24
Table 5-5.	List of Nuclides in "Principal Actinide" Set	25
Table 5-6.	List of Nuclides in "Actinide-only" Set	25
Table 5-7.	Input Requirements for IDSGEN	26
Table 5-8.	Input Requirements for BLINK	27
Table 5-9.	Location of Data for Core Structures	33
Table 5-10.	Order of Indices	38
Table 5-11.	Critical Experiments Performed in Cycle 13, in Quad Cities Unit 2	38
Table 5-12.	Critical Experiments Performed in Cycle 14, in Quad Cities Unit 2	39
Table 6-1.	Results for CRC Reactivity Calculations	40
Table 6-2.	Gadolinium Inventory for Node 3	43
Table 6-3.	Gadolinium Inventory for Node 8	43
Table 8-1.	List of Attachments	48

List of Figures

Figure	Title	Page
Figure 5-1	Components in MCNP Model for BWR Core (Planar Slice)	13
Figure 5-2	Components in MCNP Model for BWR Core (Axial Slice)	14
Figure 5-3	7x7 BWR Fuel Assembly (Planar Section)	15
Figure 5-4	BWR Fuel Assembly (Axial Section)	16
Figure 5-5	Control Blade Model	17
Figure 5-6	Origin for MCNP Model	29
Figure 5-7	Fuel Assembly Model	29
Figure 5-8	Control Blade Model	30
Figure 5-9	Control Cell Layout Illustration	31
Figure 5-10	Core Arrangement	32
Figure 5-11	Top Level Flowchart for Automation Code	34
Figure 6-1	Results for CRC Reactivity Calculations	41
Figure 6-2	Gadolinium Inventory for Node 3	44
Figure 6-3	Gadolinium Inventory for Node 8	45
Figure 6-4	Comparison of Loss in Gadolinia Effectiveness	46

List of Worksheets

Worksheet	Title	Page
Worksheet 5-1	Core Data Requirements	18
Worksheet 5-2	Lattice Data Requirements	20
Worksheet 5-3	Control Blade Data Requirements	20

1. Purpose

In the development of a methodology to account for exposure effects on the reactivity of spent Boiling Water Reactor (BWR) fuel in the proposed Monitored Geologic Repository (MGR) at Yucca Mountain, the accuracy of the methods used to predict the inventories of fissile and fissionable nuclides as well as neutron poisons present in the spent fuel must be established. One aspect of this confirmatory effort is accomplished by performing benchmark problems for known in-reactor critical configurations – Commercial Reactor Criticals (CRC's). These "experiments" are performed during each startup of a core and provide a test of the ability of the Waste Package Operations (WPO) methods to properly predict neutron multiplication for a fuel mass that includes actinides and fission products created during power operation.

2. Method

The analytical model employed in this analysis consisted of using the MCNP computer program (References 7.1 and 7.2, the MCNP 4A and 4B User's Manuals) to determine the effective neutron multiplication factor (k_{eff}) for CRC's. The results reported for the MCNP calculations are the combined average values of k_{eff} from the three estimates (collision, absorption and track length) listed in the final generation summary in the MCNP output. The calculation of acceptable bias values and subcritical margins are based on the results of numerous evaluations performed using the MCNP code system. The CRC's documented in this analysis may be used to help determine appropriate bias values for use in subsequent criticality evaluations performed with MCNP.

The input instructions to MCNP are constructed from two sources. For the definition of core and peripheral components and thermodynamic values, reference is made to applicable references. For the constituents of exposed fuel, reference to values from companion calculations performed with the SAS2H sequence of the SCALE computer code package (Reference 7.3) is made.

3. Assumptions

The following assumptions were made in preparing this calculation. Note that assumptions used in the generation of the nuclide inventories of the spent fuel are not included. For those assumptions, see the NLP-3-27 Engineering Calculation that documents their generation (Reference 7.4, hereafter cited as the "QC2 Depletion Calculations").

1) It is assumed that quarter-core symmetry adequately approximates the fuel loading of the core. Since it is the practice of nuclear fuel vendors and the operating utilities to use this assumption (or a more restrictive assumption of one-eighth symmetry) in developing fuel loading patterns and selecting control blade positions, negligible error is introduced by performing calculations with this assumption. This assumption is used throughout this engineering calculation.

2) It is assumed that the water density throughout the core is the same; however, this is not exact since the exposed fuel is thermally hot and creates local temperature – and hence density gradients – due to convection. Further there is a small increase in density from the top of the core to the bottom of the core due to the weight of water above the particular axial location. Since both the isothermal and isobaric compressibility for sub-cooled water and saturated liquid water are small, there is a small variation in density throughout the problem and this is a good assumption. This assumption is used throughout this engineering calculation.

3) The presence of stainless steel components between the core shroud and the inner surface of the pressure vessel, including the jet pumps, is neglected. This is acceptable since the importance of neutrons in this region of the problem is vanishingly small. The stainless steel liner on the inside surface of the pressure vessel is omitted for the same reason. This assumption is used in §5.1.3.

4) The structural components above and below the active fuel, including the upper and lower tie plates, core grid and core plate are homogenized with the moderator to represent the neutron transport characteristics of regions. This is acceptable since these regions of the problem affect the computed neutron multiplication through the reflection of neutrons that have escaped from the region of the active core and the estimation of the hydrogen density is most important to determining this reflection. Since there is little variation in moderator density from startup test to startup test, the same homogenized composition is used for all the exposed-core calculations. This assumption is used in Attachments III, XVIII and XIX.

5) For the exposed-core calculations, the fuel assembly grid spacers were omitted. For these cases the nodes were very large and the spacer grid volume fraction was very low. Further, the spacer grids are composed of zircaloy, which is virtually transparent to neutrons. Therefore, there is little error in this assumption. This assumption is used in Attachments XVIII and XIX.

6) In the computation of the oxygen inventory for gadolinia-bearing fuel lattices, the computation of the oxygen inventory of the UO_2 is not decreased by the fraction of UO_2 displaced by the gadolinia; however, the lattice-averaged gadolinia concentration is generally less than 1% and the low atomic weight of oxygen makes the effect even less pronounced. Therefore, this assumption is acceptable. This assumption is used in Attachment VIII.

7) The isotopic inventories for exposed fuel are uniformly distributed through all the fuel rods in a given lattice. This is necessary since the depletion calculations are performed on a lattice-averaged basis and no information is provided to re-distribute the fuel materials. This is also true for the gadolinia in fuel lattices with integral burnable absorber. The effect of this approximation is studied for beginning-of-cycle (BOC) calculations where the effect should be the most pronounced. This is possible since the explicit loading of gadolinia in the fresh fuel is known. This assumption is used in Attachments VI, XVIII and XIX.

8) For exposed gadolinia-bearing fuel, the ^{155}Gd due to fission is not processed from the depletion calculations. This is acceptable since there is already ^{155}Gd in the fuel in the form of "tails" from the gadolinia added as an integral burnable absorber and the incremental effect of the fission product ^{155}Gd is probably small. Further, this is a conservative assumption that increases the neutron multiplication. This assumption is used in Attachments VI, XVII and XIX.

9) For startup criticality tests that do not have quarter-core symmetric critical control blade patterns, the symmetry locations in the four quadrants are averaged together. This is acceptable since the incremental reactivity effect of the position of a small number of control blades is approximately represented by the depth of insertion into the core. This is particularly true if the blades are withdrawn beyond the strong axial flux peak near the top of the core. This assumption is used in Attachments VI, XVII and XIX.

4. Use of Computer Software

Two types of software are used in the analyses documented herein. The first type is software that has been approved for Quality Assurance (QA) work and is already qualified within the context of the Civilian Radioactive Waste Management System (CRWMS) QA system. The second type is "software routines." Some of these are routines written to automate the process described in this document. These are fully documented in this document. Others are commercially available products which are merely referenced; nevertheless, the results of the use of such software, as well as the inputs, are described in sufficient detail to permit an independent repetition of the calculations.

4.1. Software Approved for QA Work

The versions of MCNP used for these calculations is MCNP 4A HP 9000 Version, CSCI: 30006 VER. 4A (Reference 7.5, the MCNP Version 4A Software Qualification Report – SQR) and MCNP 4B2 HP9000 Version, CSCI: 30033 VER 4B2LV (Reference 7.6, the MCNP Version 4B2 SQR), both installed on a Hewlett Packard 9000 Workstation. The neutron interaction libraries used in this analysis are those documented in the Software Qualification Report. Both the ENDF/B-V and ENDF/B-VI libraries were qualified for use in the MNCP 4A and 4B2 SQR's.

The input files used are reiterated in the output files and those output files are contained on a magnetic tape. The contents of this tape are given in Attachment I.

a) The MCNP 4A and 4B2 computer codes are an appropriate tools to determine the criticality potential, k_{eff}, of fresh and spent lattices of light water reactor fuel assemblies.

b) This software has been validated over the range it was used.

c) It was previously obtained from the Software Control Management (SCM) in accordance with appropriate procedures.

4.2. Software Routines

Two software routines were created to support the work documented in herein.

4.2.1. BLINK

BLINK (BWR Linkage) is a software routine that creates an MCNP model of a BWR core as card image representations in an ASCII-format file.

4.2.2. IDSGEN

IDSGEN (Intermediate Dataset Generator) creates ASCII-format files containing information defining the fresh and exposed fuel materials for the fuel assemblies that populate a given BWR core.

5. Calculation

The subject calculations for this document are for Cycles 13 and 14 of the Quad Cities Unit 2 BWR. However, the software routines developed to support this work are substantial, so an initial calculation was performed to model the initial core criticality of the Quad Cities Unit 1 core. Specific testing of the model produced by the automation is demonstrated for the model of the Quad Cities Unit 1 initial core, while integration testing of the linkage is obtained from the evaluation of that core. This calculation mimicked the previous analysis of that core with a specifically prepared ("hand crafted") MCNP model (Reference 7.7, hereafter cited as the "Previous Analysis") and good agreement between that analysis and an analysis with the software routine automation provides confidence in the models generated by that automation.

Subsequent to this reiteration of the Quad Cities Unit 1 CRC, the analysis of the CRC's from Quad Cities Unit 2 are documented.

5.1. Automation of MCNP Input Deck Creation

This sub-section documents the creation of a process to create MNCP input representations suitable for modeling BWR CRC's and calculations that support the validity of that process. This process includes the following components:

- reference ASCII-format datasets containing information common to modeling for specific types of BWR's and the components thereof;
- input instructions for the specific analysis; and
- problem-specific datasets containing number densities for exposed fuel SAS2H.

5.1.1. Process Abstract

The analysis tools currently approved for use within MGR for performing such computations are the SAS2H sequence of the SCALE code system to generate fuel nuclide inventories with depletion and decay, and the MCNP code to compute the steady state neutron transport and multiplication in the reactor core. Therefore, a process must be structured whereby isotopic inventories are transferred, with appropriate manipulation, from the output of the SAS2H sequence computations to the MCNP input representations.

In order to achieve an efficient and error-resistant process, suitable automation must be developed to perform this linkage. This linkage prepares the MCNP representation of the fuel assemblies, core structure, and components and regions adjacent to the active fuel. Adequate testing must be performed to verify its performance.

5.1.2. Computational Platform and Software

The linkage that creates the MCNP input representations (i.e., BLINK) was created on an HP 9000 Workstation and was written to be compliant with either FORTRAN-77 or C-89 as appropriate. The automation to directly process SAS2H output files and create intermediate fuel datasets for use by BLINK (i.e., IDSGEN) was written to be compliant with FORTRAN-77.

5.1.3. Specific Data Requirements

The information necessary to create an MCNP model of a particular BWR core at a specific point in time are:

- core arrangement, including design of fuel assemblies at each location in the core and locations of control blades and in-core instrumentation dry tubes;

- geometrical design of fuel assemblies;
- location, dimensions and composition of fuel spacer grids;
- material composition of fuel in fuel assemblies;
- geometrical design and material compositions of control blades;
- location and thickness of core shroud;
- location and thickness of reactor pressure vessel; and
- configuration and composition of axial reactor internal components above and below the active core.

The isotopic inventories from SAS2H are applicable to distinct lattices designs at specific combinations of exposure and moderator density history (or the corollary void history). Thus for an exposed core, unique inventories must be provided for each distinct node in the core tracking supplied by the plant process computer in the portion of the core modeled (generally a quarter of the core). At a maximum, every fuel assembly must be modeled, and each assembly will be divided into multiple axial nodes. The core tracking data is generally performed in 24 or 25 axial nodes, so this is as fine of a division as may be used.

The execution of the SAS2H code set has been automated for the purposes of these analyses with CRAFT Version 4B and its attendant executive, SPACE Version 00 (Attachments I and II of the QC2 Depletion Calculations, respectively). The results from SAS2H are compiled in databases for each fuel assembly type in the particular CRC "experiment."

Additional databases are created based on the BWR size and layout and the varieties of fuel assembly designs, as well as common materials used in the construction of the BWR internals and the fuel assemblies.

5.1.4. Tasks

In order to implement the automated process whereby an MCNP representation of a BWR can be created, the tasks shown in Tables 5-1 and 5-2 must be accomplished.

Table 5-1. Task List for Prototype Implementation

Index	Task	Sub-task	Description	Predecessors
1.0	Data Acquisition			
1.1		Determine Required Data	Data to Describe Core and Fuel Assemblies	
1.2		Data Sources	Identify Sources of Data	1.1
2.0	Process Framework			
2.1		Data Structures	Define Data Structures within Context of Automation (file contents and directory structure)	1.1
2.2		Populate Structures	Load Data into Data Structures	1.2, 2.1
3.0	Automation Creation			
3.1		MNCP Model Layout	Create Overall Framework for BWR Core Model	
3.2		Link to Data	Correlate Data with Regions in	2.2

Index	Task	Sub-task	Description	Predecessors
		Structures	Layout	
3.3		Program Flow	Top Level Program Flowchart	2.1, 3.1
3.4		Functional Description	Create Functional Description of Major Modules	3.3
3.5		Encode Logic		3.2, 3.3
4.0	Testing			3.0
4.1		Dummy Datasets Creation	SAS2H Dataset Representing Initial Core	2.1
4.2		MCNP Input Representation Creation		3.0
4.3		Result Comparison	Compare Results from Automation to Previous Analysis	4.2
5.0	Depleted-core Analysis			4.0
5.1		Dataset Update	Create Models for New Lattices Types	2.1
5.2		SAS2H Datasets	Process SAS2H Datasets for Depleted Configuration	
5.3		MCNP Input Representation Creation	Input Representations for Depleted BWR Core	5.1, 5.2
5.4		Generate Results		5.3

Table 5-2. Task List for Production Software Routine Creation

Index	Task	Sub-task	Description	Predecessors
1.0	Upgrade to Full Scope			
1.1		Core Models	Introduce Datasets for other Core Sizes and Layouts	
1.2		Lattices Models	Introduce Datasets for other Lattices	

The balance of this document describes the fulfillment of these tasks.

5.2. Data Acquisition

5.2.1. Required Data

The data requirements for automating the creation of MNCP input representations for BWR cores is informed by the analysis for the initial core of the Quad Cities-1 BWR (the Previous Analysis). The MCNP model represents a BWR core and adjacent core internals and is either a full-core representation or a symmetrical subset of the full core (i.e., a quarter of the core). This representation contains the following components:

- fuel assemblies, including fuel rods, water rods (where applicable), channels and water among channels (inter-assembly bypass flow);
- control rods;
- instrument dry tubes;
- core shroud and bypass region between fuel region and shroud (extra-assembly bypass flow);
- water in downcomer, outside of the shroud; and
- axial ends comprised of mixtures of light water and stainless steel to approximate the core internal below and above the fuel.

These components and their relative locations are illustrated in Figure 5-1, which shows a planar section of the core model. An axial section of the reactor is shown in Figure 5-2. A detailed planar section illustration of a typical 7x7 off-set BWR fuel assembly design is shown in Figure 5-3 (N.B., this design does not incorporate water rods) and an axial schematic is shown in Figure 5-4. In the axial schematic contemporary axial zoning of the lattices designs is shown with General Electric (GE) terminology. While not all fuel assemblies will have these specific zones, the schematic does illustrate the range of different lattice nuclear designs realizable with a single fuel assembly. An illustration of a typical control blade for the same lattice geometry is shown in Figure 5-5.

Since BWR cores come in a variety of sizes, templates are developed to represent the particular core designs modeled. Further, BWR lattices designs and control blade designs vary and specific models are provided as appropriate.

The data to describe the entire core may be correlated with the illustrations in this section. The necessary data for the core and core structure are shown in Worksheet 5-1. Information required for modeling of a 7x7 fuel assembly in shown in Worksheet 5-2, while data for modeling a control blade used in this type core is provided in Worksheet 5-3.

Figure 5-1. Components in MCNP Model for BWR Core (Planar Slice)

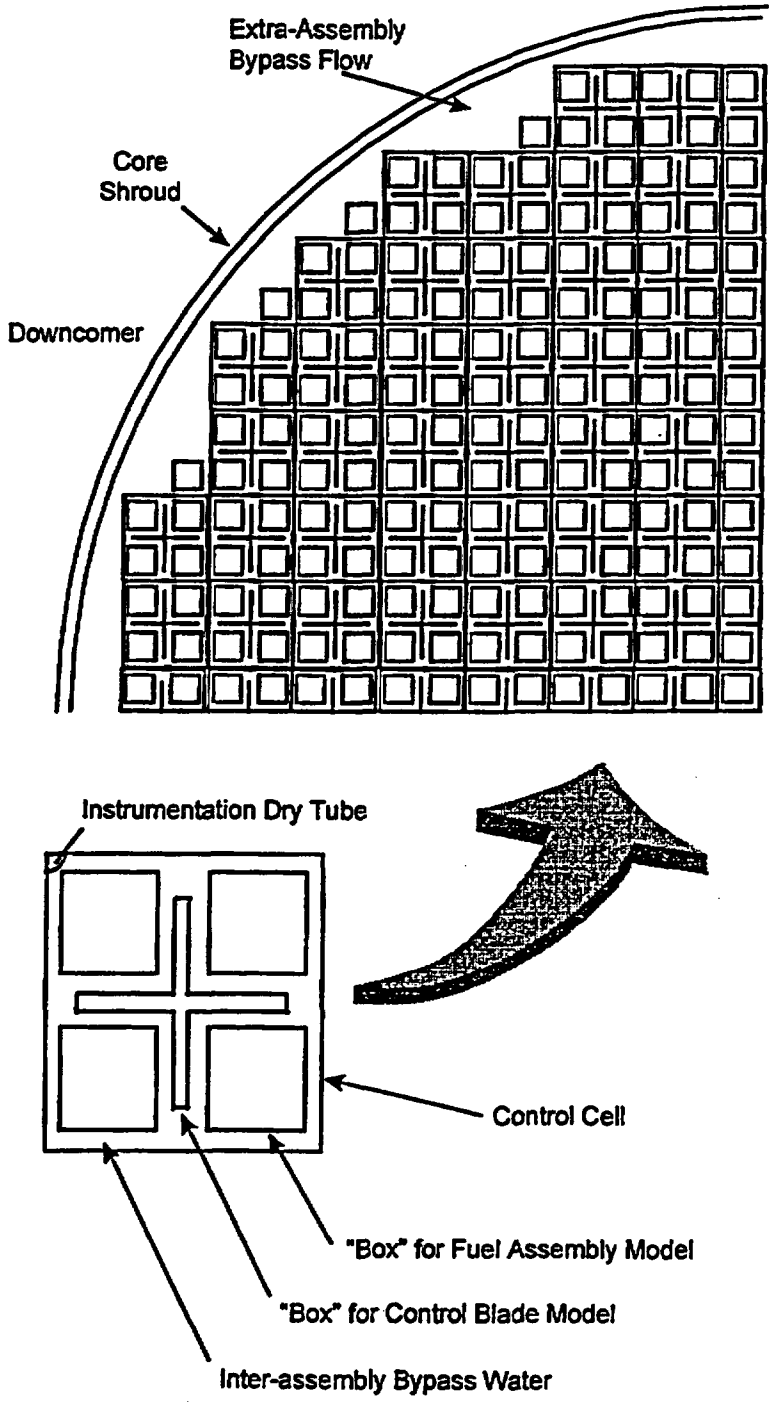

Figure 5-2. Components in MCNP Model for BWR Core (Axial Slice)

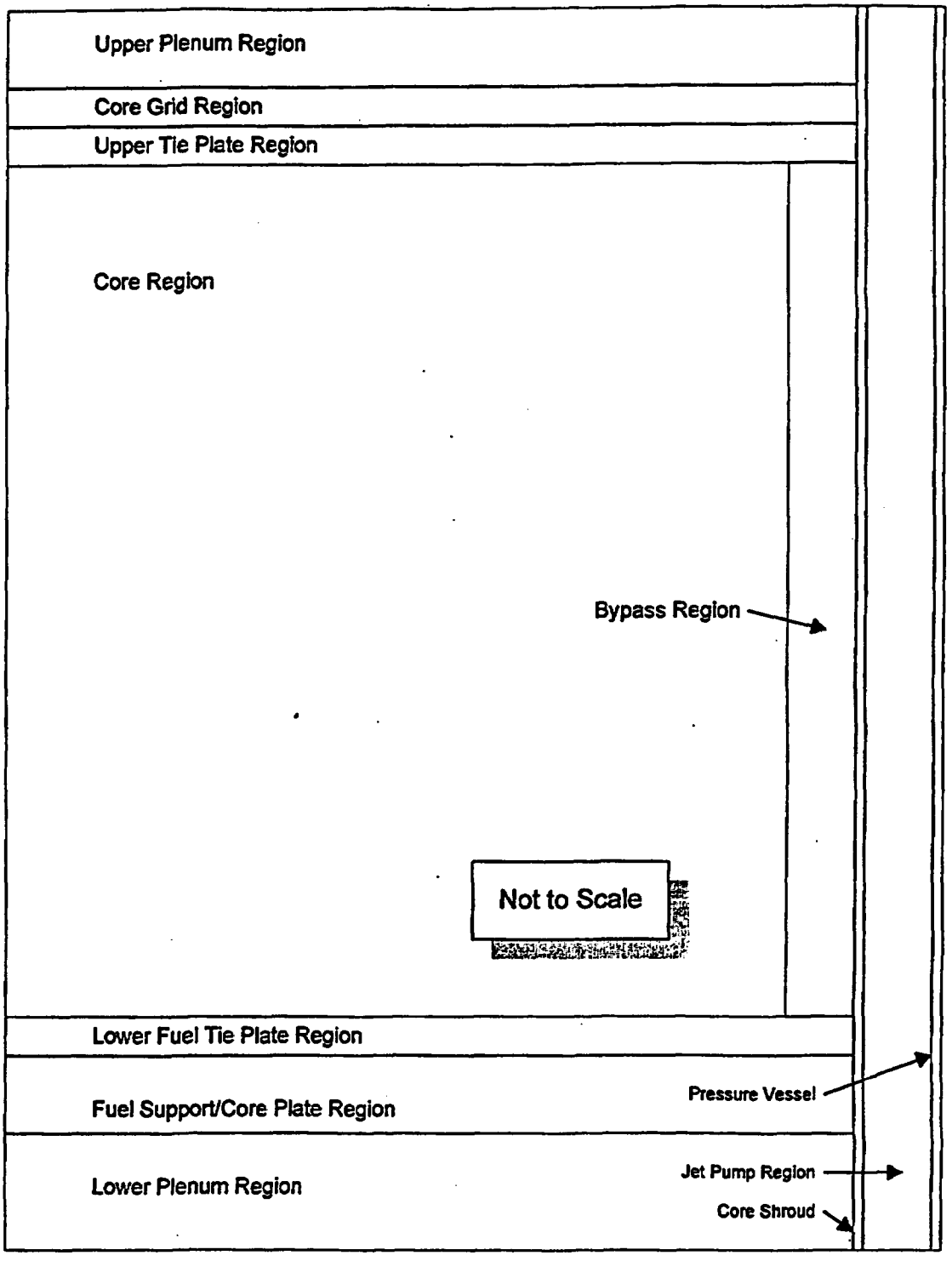

Figure 5-3. 7x7 BWR Fuel Assembly (Planar Section)

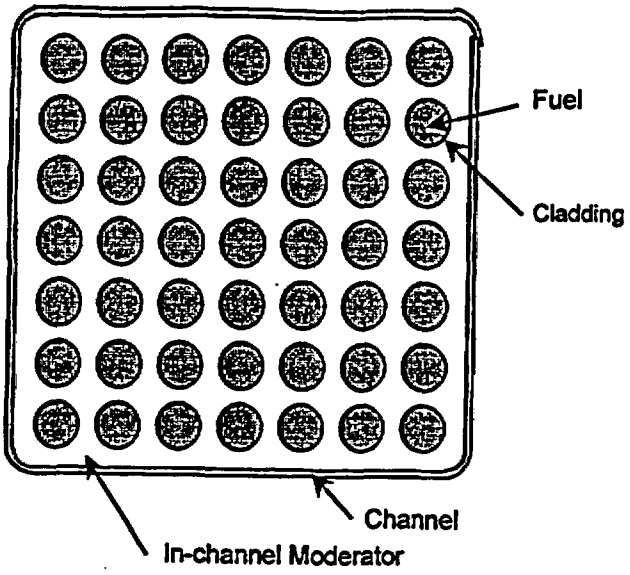

Figure 5-4. BWR Fuel Assembly (Axial Section)

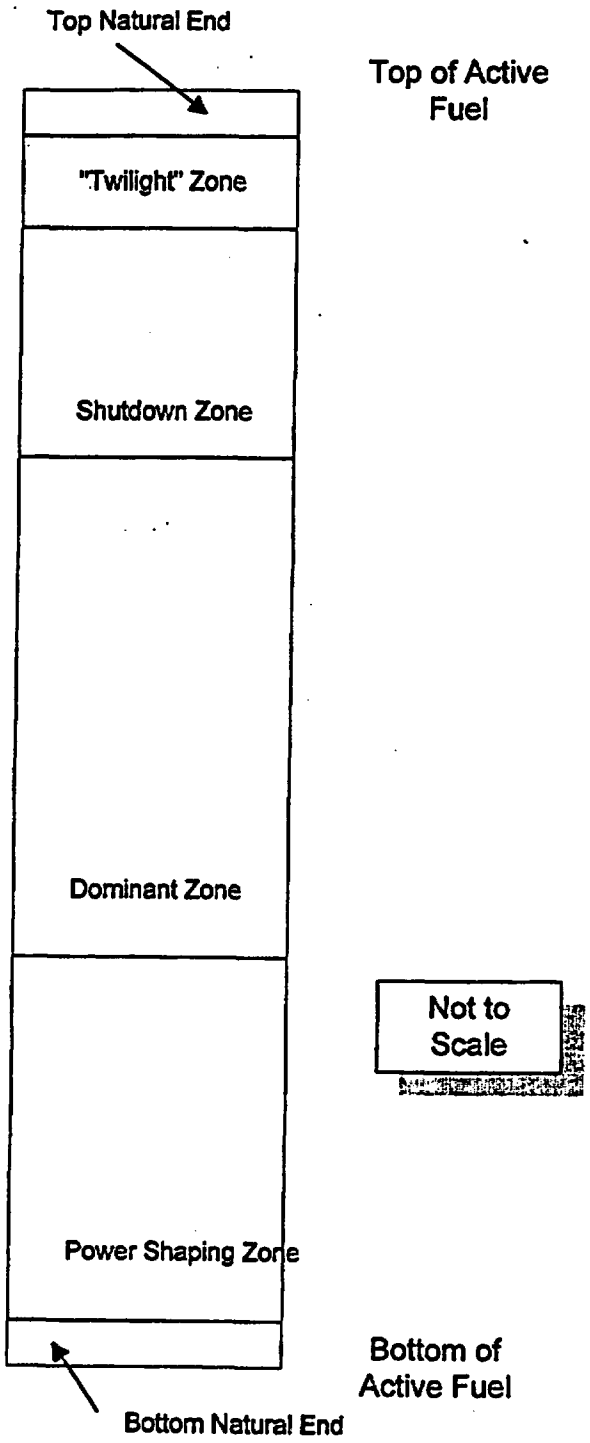

Figure 5-5. Control Blade Model

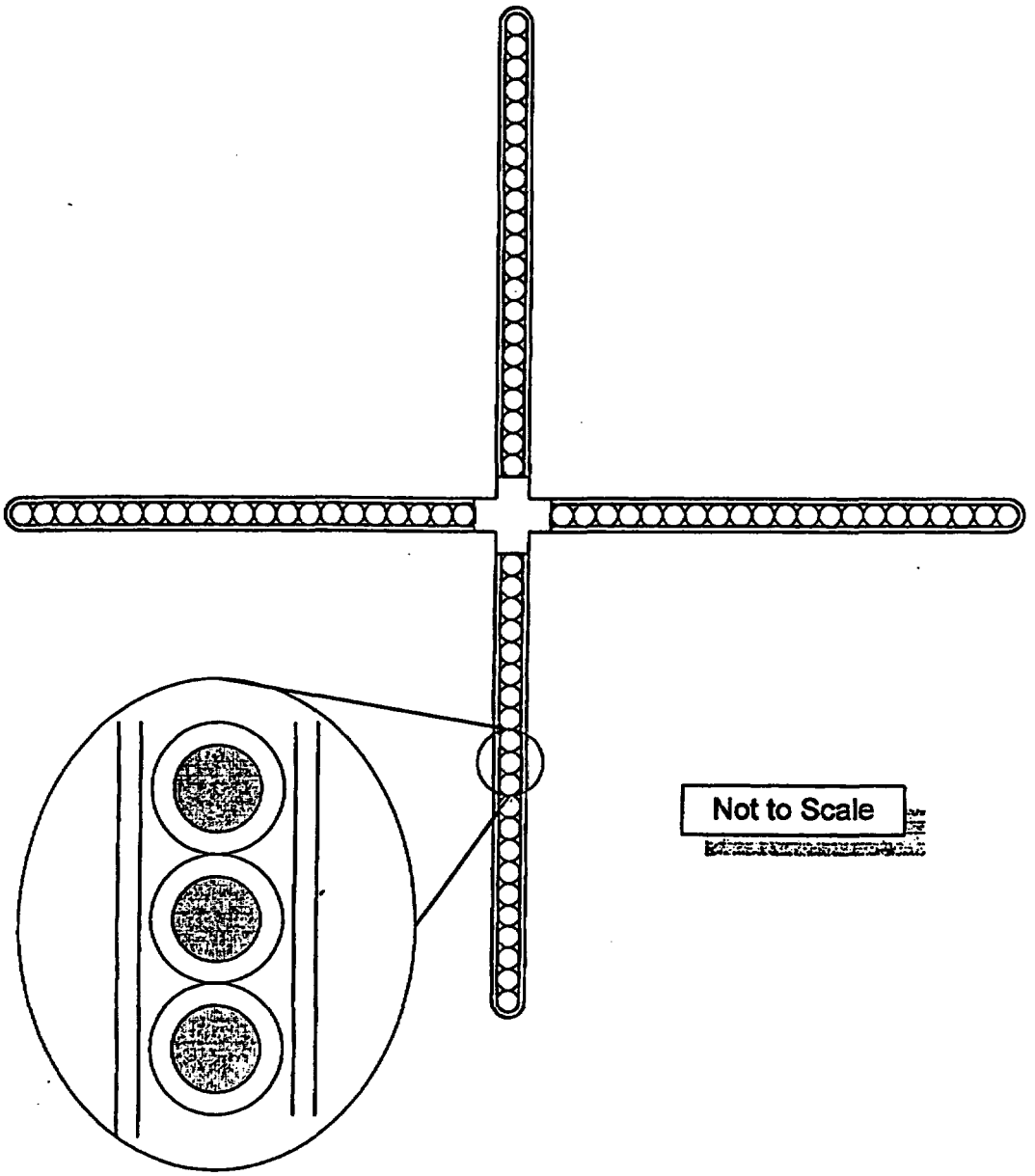

Worksheet 5-1. Core Data Requirements

Component	Parameter	Purpose
Vessel	Outer Diameter	Define Outer Lateral Edge of Problem Domain
	Thickness	Define Inner Radius of Vessel Component and helps to Define the Jet Pump Region
	Material Composition	Needed to Select Appropriate Nuclear Data Constants
Core Shroud	Outer Diameter	Define Outer Radius of Shroud Component and helps to Define Jet Pump Region
	Inner Diameter	Define Inner Radius of Shroud Component and helps to Define Region between Shroud and Peripheral Fuel Assemblies
	Material Composition	Needed to Select Appropriate Nuclear Data Constants
Core	Number of Columns in Fuel Assembly Map	Defines Size of Problem
	Number of Rows in Fuel Assembly Map	Defines Size of Problem
	Valid Fuel Assembly Locations	Gives Locations of Fuel Assemblies
	Valid Control Blade Locations	Gives Locations of Control Blades
	Instrumentation Tube Layout	Gives Location of In-core Instrumentation Dry Tubes
	Guide Tube Outer Diameter	Defines Size of Guide Tube
	Guide Tube Inner Diameter	Defines Size of Guide Tube
	Material Composition of In-core Guide Tube	Needed to Select Appropriate Nuclear Data Constants
	Fuel Assembly Pitch	Provides Sizing for Problem and Separation between Fuel Assemblies and Control Blades
	Top of Upper Tie Plate Region	Helps Define Upper Tie Plate Region
	Top of Core Grid Region	Helps Define Core Grid Region
	Material Composition of Top Grid Region	Needed to Select Appropriate Nuclear Data Constants (N.B., Homogenized with the Moderator in that Region)
	Axial Top of Problem	Non-re-entrant Surface to Delimit Problem Domain (fixed to be 30 cm above the Top of Core Grid Region)
	Bottom of Lower Tie Plate Region	Helps Define Lower Tie Plate Cell

Worksheet 5-1 (cont'd)

Component	Parameter	Purpose
	Bottom of Fuel Support/Core Plate Region	Helps Define Fuel Support/Core Plate Region
	Material Composition of Fuel Support/Core Plate Region	Needed to Select Appropriate Nuclear Data Constants (N.B., Homogenized with the Moderator in that Region)
	Bottom of Lower Plenum Region	Non-re-entrant Surface to Delimit Problem Domain (fixed to be 30 cm below the Bottom of Fuel Support/Core Plate Region

Worksheet 5-2. Lattice Data Requirements

Component	Parameter	Purpose
Channel	Inner Span	Provide "Window" for Fuel Rod Array and helps to Define Channel Inner Surface
	Wide Gap Thickness	Give Offset from Control Blade and helps to Define Channel Outer Surface in Wide Gaps
	Narrow Gap Thickness	Give Offset from Instrument Tube and helps to Define Channel Thickness in Narrow Gaps
	Thickness	Helps to Define Channel Inner Surfaces
	Corner Inner Radius	Define Inner and Outer Channel Surfaces at Corners
Fuel Rods	Clad to Clad Separation	Helps to Situate Fuel Rods with respect to One Another
	Channel to Clad Separation	Situates Fuel Rods with respect to Channel Inner Surface
	Fuel Rod Pitch	Helps to Situate Fuel Rods with respect to One Another
	Cladding Outer Diameter	Defines Outer Surface of Fuel Rod Cladding Cell
	Cladding Thickness	Define Inner Surface of Fuel Rod Cladding Cell and help to Define Fuel-to-cladding Gap
	Pellet Diameter	Defines Outer Surface of Fuel Pellet and helps to Define Fuel-to-cladding Gap
Instrument Tube	Dry Tube Outer Diameter	Defines Outer Surface of Dry Tube
	Dry Tube Inner Diameter	Defines Inner Surface of Dry Tube and also Defines Detector Location for In-core Instrumentation

Worksheet 5-3. Control Blade Data Requirements

Component	Parameter	Purpose
Absorber Tubes	Inner Diameter	Defines B_4C Poison Cell and Helps to Define Absorber Tube Cell
	Outer Diameter	Helps to Define Absorber Tube Cell and Internal Flow Area
	Placement	Locates Absorber Tubes within Internal Sheath Volume
Tie Rod	Span	Helps to Define Tie Rod Cell and Placement of Sheath and Absorber Tubes
	Thickness	Helps to Define Tie Rod Cell and Placement of Sheath
	Length	Defines Length of Control Blade Model
Sheath	Thickness	Helps to Define Sheath Cell

5.2.2. Data Sources

For the prototype development, the data necessary to construct the MCNP model for the initial core model will come from the Quad Cities-1 analysis already noted. Additional supporting information will come from the EPRI report documenting the startup testing and cycle tracking (Reference 7.8). For the first exposed core CRC, data is obtained from utility data and compiled in a QAP-3-5 document (Reference 7.9, hereafter cited as the "Quad Cities Unit 2 CRC Data Report").

For both the core structural materials and the exposed fuel materials, cross sections must be selected from those available in the MCNP libraries to represent the nuclear properties of those materials. The libraries used for the isotopes considered in the present analysis are shown in Table 5-3. For "best estimate" evaluations, all of the nuclides shown in Table 5-3 are used. Three other nuclide sets are considered for evaluations, the "principal isotope" set (Reference 7.10, page 3-26), the "principal actinide set" (which is merely the "principal isotope" set less the fission products) and the "actinide-only" set used in the transportation licensing effort (Reference 7.11). The identities of the nuclides in the "principal isotope" set are shown in Table 5-4. The other identifying characteristics for the libraries for these nuclides are identical to those shown in Table 5-3. Nuclides included in the "principal actinide" set are provided in Table 5-5 and those of the "actinide-only" set are shown in Table 5-6.

Table 5-3. Library Identifiers for Nuclides Used in Evaluations

Element / Isotope	MCNP ZAID	Temperature (K)	Library Name	Data Source
H-1	1001.50c	294.0	rmccs	ENDF/B-V.0
H-3	1003.50c	294.0	rmccs	ENDF/B-V.0
He-4	2004.50c	294.0	rmccs	ENDF/B-V.0
Li-6	3006.50c	294.0	rmccs	ENDF/B-V.0
Li-7	3007.55c	294.0	rmccs	ENDF/B-V.2
Be-9	4009.50c	294.0	rmccs	ENDF/B-V.0
B-10	5010.50c	294.0	rmccs	ENDF/B-V.0
B-11	5011.56c	294.0	newxs	LANL/T-2
C-nat	6000.50c	294.0	rmccs	ENDF/B-V.0
N-14	7014.50c	294.0	rmccs	ENDF/B-V.0
O-16	8016.50c	294.0	rmccs	ENDF/B-V.0
Al-27	13027.50c	294.0	rmccs	ENDF/B-V.0
Si-nat	14000.50c	294.0	endf5p	ENDF/B-V.0
P-31	15031.50c	294.0	endf5u	ENDF/B-V.0
S-32	16032.50c	294.0	endf5u	ENDF/B-V.0
Ti-nat	22000.50c	294.0	endf5u	ENDF/B-V.0
Cr-50	24050.60c	294.0	endf60	ENDF/B-VI.1
Cr-52	24052.60c	294.0	endf60	ENDF/B-VI.1
Cr-53	24053.60c	294.0	endf60	ENDF/B-VI.1
Cr-54	24054.60c	294.0	endf60	ENDF/B-VI.1
Mn-55	25055.50c	294.0	endf5u	ENDF/B-V.0

Element / Isotope	MCNP ZAID	Temperature (K)	Library Name	Data Source
Fe-54	26054.60c	294.0	endf60	ENDF/B-VI.1
Fe-56	26056.60c	294.0	endf60	ENDF/B-VI.1
Fe-57	26057.60c	294.0	endf60	ENDF/B-VI.1
Fe-58	26058.60c	294.0	endf60	ENDF/B-VI.1
Co-59	27059.50c	294.0	endf5u	ENDF/B-V.0
Ni-58	28058.60c	294.0	endf60	ENDF/B-VI.1
Ni-60	28060.60c	294.0	endf60	ENDF/B-VI.1
Ni-61	28061.60c	294.0	endf60	ENDF/B-VI.1
Ni-62	28062.60c	294.0	endf60	ENDF/B-VI.1
Ni-64	28064.60c	294.0	endf60	ENDF/B-VI.1
Cu-63	29063.60c	294.0	endf60	ENDF/B-VI.2
Cu-65	29065.60c	294.0	endf60	ENDF/B-VI.2
As-75	33075.35c	0.0	rmccsa	ENDF/B-V.0
Kr-80	36080.50c	294.0	rmccsa	ENDF/B-V.0
Kr-82	36082.50c	294.0	rmccsa	ENDF/B-V.0
Kr-83	36083.50c	294.0	rmccsa	ENDF/B-V.0
Kr-84	36084.50c	294.0	rmccsa	ENDF/B-V.0
Kr-86	36086.50c	294.0	rmccsa	ENDF/B-V.0
Y-89	39089.50c	294.0	endf5u	ENDF/B-V.0
Zr-nat	40000.60c	294.0	endf60	ENDF/B-VI.1
Zr-93	40093.50c	294.0	kidman	ENDF/B-V.0
Nb-93	41093.50c	294.0	endf5p	ENDF/B-V.0
Mo-nat	42000.50c	294.0	endf5u	ENDF/B-V.0
Mo-95	42095.50c	294.0	kidman	ENDF/B-V.0
Tc-99	43099.50c	294.0	kidman	ENDF/B-V.0
Ru-101	44101.50c	294.0	kidman	ENDF/B-V.0
Ru-103	44103.50c	294.0	kidman	ENDF/B-V.0
Rh-103	45103.50c	294.0	rmccsa	ENDF/B-V.0
Rh-105	45105.50c	294.0	kidman	ENDF/B-V.0
Pd-105	46105.50c	294.0	kidman	ENDF/B-V.0
Pd-108	46108.50c	294.0	kidman	ENDF/B-V.0
Ag-107	47107.60c	294.0	endf60	ENDF/B-VI.0
Ag-109	47109.60c	294.0	endf60	ENDF/B-VI.0
Cd-nat	48000.50c	294.0	endf5u	ENDF/B-V.0
In-nat	49000.60c	294.0	endf60	ENDF/B-VI.0

Element / Isotope	MCNP ZAID	Temperature (K)	Library Name	Data Source
Sn-nat	50000.35c	0.0	endl85	LLNL
Xe-131	54131.50c	294.0	kidman	ENDF/B-V.0
Xe-134	54134.35c	0.0	endl85	LLNL
Xe-135	54135.53c	587.0	eprixs	ENDF/B-V
Cs-133	55133.50c	294.0	kidman	ENDF/B-V.0
Cs-135	55135.50c	294.0	kidman	ENDF/B-V.0
Ba-138	56138.50c	294.0	mmccs	ENDF/B-V.0
Pr-141	59141.50c	294.0	kidman	ENDF/B-V.0
Nd-143	60143.50c	294.0	kidman	ENDF/B-V.0
Nd-145	60145.50c	294.0	kidman	ENDF/B-V.0
Nd-147	60147.50c	294.0	kidman	ENDF/B-V.0
Nd-148	60148.50c	294.0	kidman	ENDF/B-V.0
Pm-147	61147.50c	294.0	kidman	ENDF/B-V.0
Pm-148	61148.50c	294.0	kidman	ENDF/B-V.0
Pm-149	61149.50c	294.0	kidman	ENDF/B-V.0
Sm-147	62147.50c	294.0	kidman	ENDF/B-V.0
Sm-149	62149.50c	294.0	endf5u	ENDF/B-V.0
Sm-150	62150.50c	294.0	kidman	ENDF/B-V.0
Sm-151	62151.50c	294.0	kidman	ENDF/B-V.0
Sm-152	62152.50c	294.0	kidman	ENDF/B-V.0
Eu-151	63151.55c	294.0	newxs	LANL/T-2
Eu-152	63152.50c	294.0	endf5u	ENDF/B-V.0
Eu-153	63153.55c	294.0	newxs	LANL/T-2
Eu-154	63154.50c	294.0	endf5u	ENDF/B-V.0
Eu-155	63155.50c	294.0	kidman	ENDF/B-V.0
Gd-152	64152.50c	294.0	endf5u	ENDF/B-V.0
Gd-154	64154.50c	294.0	endf5u	ENDF/B-V.0
Gd-155	64155.50c	294.0	endf5u	ENDF/B-V.0
Gd-156	64156.50c	294.0	endf5u	ENDF/B-V.0
Gd-157	64157.50c	294.0	endf5u	ENDF/B-V.0
Gd-158	64158.50c	294.0	endf5u	ENDF/B-V.0
Gd-160	64160.50c	294.0	endf5u	ENDF/B-V.0
Ho-165	67165.55c	294.0	newxs	LANL/T-2
Ta-181	73181.50c	294.0	endf5u	ENDF/B-V.0
Th-232	90232.50c	294.0	endf5u	ENDF/B-V.0

Element / Isotope	MCNP ZAID	Temperature (K)	Library Name	Data Source
Pa-233	91233.50c	294.0	endf5u	ENDF/B-V.0
U-233	92233.50c	294.0	rmccs	ENDF/B-V.0
U-234	92234.50c	294.0	endf5p	ENDF/B-V.0
U-235	92235.50c	294.0	eprixs	ENDF/B-V.0
U-236	92236.50c	294.0	endf5p	ENDF/B-V.0
U-237	92237.50c	294.0	endf5p	ENDF/B-V.0
U-238	92238.50c	294.0	eprixs	ENDF/B-V.0
Np-235	93235.35c	0.0	endl85	LLNL
Np-236	93236.35c	0.0	endl85	LLNL
Np-237	93237.50c	294.0	endf5p	ENDF/B-V.0
Np-238	93238.35c	0.0	endl85	LLNL
Pu-237	94237.35c	0.0	endl85	LLNL
Pu-238	94238.50c	294.0	endf5p	ENDF/B-V.0
Pu-239	94239.55c	294.0	rmccs	ENDF/B-V.2
Pu-240	94240.50c	294.0	rmccs	ENDF/B-V.0
Pu-241	94241.50c	294.0	endf5p	ENDF/B-V.0
Pu-242	94242.50c	294.0	endf5p	ENDF/B-V.0
Am-241	95241.50c	294.0	endf5u	ENDF/B-V.0
Am-242m	95242.50c	294.0	endf5u	ENDF/B-V.0
Am-243	95243.50c	294.0	endf5u	ENDF/B-V.0
Cm-242	96242.50c	294.0	endf5u	ENDF/B-V.0
Cm-243	96243.35c	0.0	endl85	LLNL
Cm-244	96244.50c	294.0	endf5u	ENDF/B-V.0
Cm-245	96245.35c	0.0	endl85	LLNL
Cm-246	96246.35c	0.0	endl85	LLNL
Cm-247	96247.35c	0.0	endl85	LLNL
Cm-248	96248.35c	0.0	endl85	LLNL

Table 5-4. List of Nuclides in "Principal Isotope" Set

Mo-95	Nd-145	Eu-151	U-236	Pu-241
Tc-99	Sm-147	Eu-153	U-238	Pu-242
Ru-101	Sm-149	Gd-155	Np-237	Am-241
Rh-103	Sm-150	U-233	Pu-238	Am-242m
Ag-109	Sm-151	U-234	Pu-239	Am-243
Nd-143	Sm-152	U-235	Pu-240	

Table 5-5. List of Nuclides in "Principal Actinide" Set

U-233	U-236	Pu-238	Pu-241	Am-242m
U-234	U-238	Pu-239	Pu-242	Am-243
U-235	Np-237	Pu240	Am-241	

Table 5-6. List of Nuclides in "Actinide-only" Set

U-234	U-238	Pu240	Am-241
U-235	Pu-238	Pu-241	
U-236	Pu-239	Pu-242	

5.3. Process Framework

The software routine for the MCNP input representations is only one part of the process whereby MNCP input decks are created to model BWR CRC's. The process relies on reliable data flowing from multiple sources. These sources supply the data described in §5.2.

5.3.1. Data Structures

The data obtained from the various sources that are used by the automation to produce the MCNP input decks are loaded into reference datasets. These are ASCII-format files that contain defined sets of data that are applicable to specific components. While these datasets are dependent on a particular core geometrical arrangement or fuel geometrical design, they are not dependent on the particular CRC being evaluated. Thus a set of such datasets will be created for a 724-bundle BWR (e.g., Quad Cities-1) which will be usable for all such cores. Further, geometrical datasets will be prepared for GE 7x7 fuel designs which are present in the Quad Cities-1 initial core. These datasets will be valid for use in other cores which incorporated fuel assemblies with this geometric design.

Datasets were created for common structural materials used in these problems, e.g., Type 304 stainless steel, zircaloy-2 and zircaloy-4. This will provide a common source for material compositions and reduce the potential for error in the inclusion of such materials in the MNCP input deck.

Additional datasets for depleted fuel compositions come from results of the SAS2H code. The "cut" files from that code are processed into compact ASCII-format datasets for accessing by the automation software routine.

These datasets will be stored in a common locations (dataset classes) on the HP workstation used for running the automation. The filenames for these datasets are are:

- Core Geometry datasets: core_database/
- Control Blade Geometry datasets: blade_database/
- Lattice Geometry datasets: lattice_database/
- Structural Component Material datasets: material_database/

The Fuel Intermediate Datasets representing fuel constituents from SAS2H depend on the specific CRC analyzed.

In addition to the file specification for the location of the SAS2H data, the information shown in Table 5-7 is required by IDSGEN to create the Fuel Intermediate Datasets.

Table 5-7. Input Requirements for IDSGEN

Item	Purpose
Lattice Dimensionality	Sizes the Problem
Lattice Identification	Identifies the Lattice Dataset
Pellet Stack Densities	Needed to Compute Nodal Mass
Pellet Outer Diameter	Needed to Compute Nodal Mass
Lattice Map	Defines the Location of Fuel Rods Types within Lattice to Properly Compute Average Values
Enrichments	Needed to Compute Proper Inventories for Unexposed Fuel and Name Dataset for both Exposed and Unexposed Fuel
Gadolinia	Needed to Compute Proper Inventories for Unexposed Fuel and Name Dataset for both Exposed and Unexposed Fuel

5.3.2. Data Structure Population

The definition and filling of the core geometry dataset for a 724-bundle BWR is given in Attachment II. The contents and generation of the core materials datasets is given in Attachment III. The creation of lattice geometry datasets applicable to the Quad Cities Unit 1 initial core CRC as well as those applicable to all the exposed core CRC for Quad Cities Unit 2 is documented in Attachment IV. A description of the format of that dataset is also located in that attachment. Attachment V provides the same information for the control blade geometry datasets.

5.3.3. Case-specific Input to Process

With the exception of the Fuel Intermediate Datasets, the data structures are intended to be applicable to more than a single CRC. The requirements for user input to the linkage automation are shown in Table 5-8.

Table 5-8. Input Requirements for BLINK

Item	Purpose
File Specification for Core Materials Database	Necessary to Locate the Database
File Specification for Core Geometry Database	Necessary to Locate the Database
File Specification for Blade Geometry Database	Necessary to Locate the Database
File Specification for Lattice Geometry Database	Necessary to Locate the Fuel Geometry Datasets
Thermodynamic Parameters	Necessary to Specify Problem Temperatures and Moderator Density
Material Compositions for Upper and Lower Tie Plate Regions	Necessary to Properly Model these Homogenized Regions of the Core
Fuel Assembly Loading Map by Geometry	Placement of Lattice Design
Fuel Assembly Loading Map by Material Composition	Placement of Lattice Design
Blade Position Map	Position of Control Blades
Lattice Assignments to Fuel Assemblies	Necessary to Build Fuel Assembly Models
Names of Lattice Geometry Datasets	Necessary to Locate Proper Geometrical Data
Names of Lattice Material Datasets	Necessary to Locate Proper Material Data
Number, Location and Material Specification for Grid Spacers	Necessary to Properly Model such Spacers

5.4. Automation Creation

This section of the document describes the specification for and encoding of automation.

5.4.1. MCNP Model Layout

The model of the MCNP core is comprised of the vessel, core shroud and various repeating structures. The origin assumed for the model is shown in Figure 5-6. The repeating structures in the core are the fuel assemblies and the control blades. The fuel assemblies are modeled as stacks of rectangular parallelepipeds as shown in Figure 5-7.

The control rods are modeled as a single structure as shown in Figure 5-8. This permits the blades to readily be moved to new positions to perform sensitivity studies and to reduce unnecessary complexity in the blade model. Further subdivision provides no calculational benefit since blade depletion is generally not provided with the CRC data. Further, since blade lifetime criteria are based on small effects on overall core reactivity, the effect of blade depletion should be small and within the resolution of the Monte Carlo calculation. As shown in the illustration, the blade handle and blade velocity limiter are omitted. The handle has a small effect on reactivity due to the displacement of moderator and introduction of stainless steel as an absorber. While these two considerations will offset one another somewhat, the net effect should be small.

These repeating structures are situated in the core through the device of "control cells." A control cell is illustrated in Figure 5-9. Each control cell is constructed from four fuel assemblies and a control blade at the center of the cell. Each fuel assembly may be different in its geometric details – and certainly in their material compositions. These control cells are placed in the larger framework of the core (see Figure 5-10).

Figure 5-6. Origin for MCNP Model

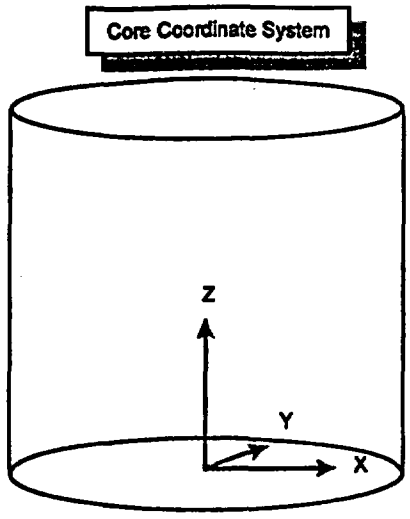

Figure 5-7 Fuel Assembly Model

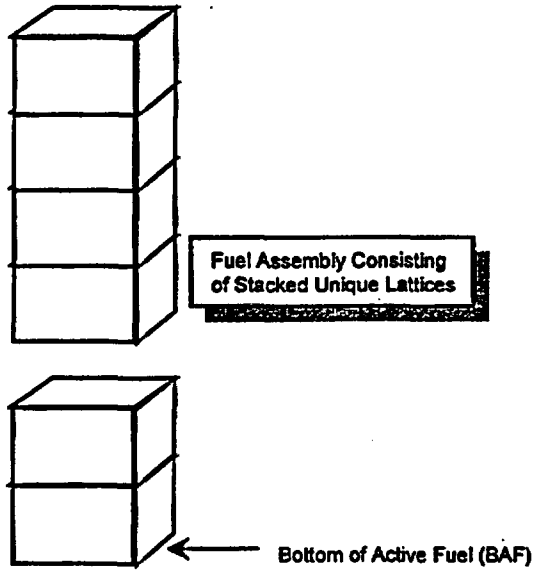

Figure 5-8. Control Blade Model

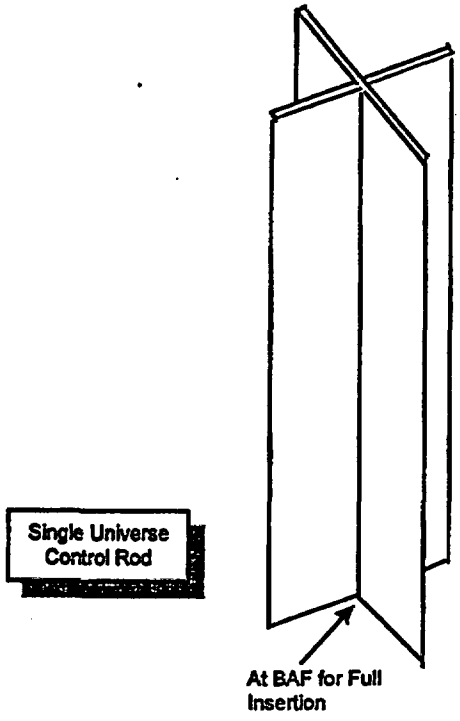

Figure 5-9. Control Cell Layout Illustration

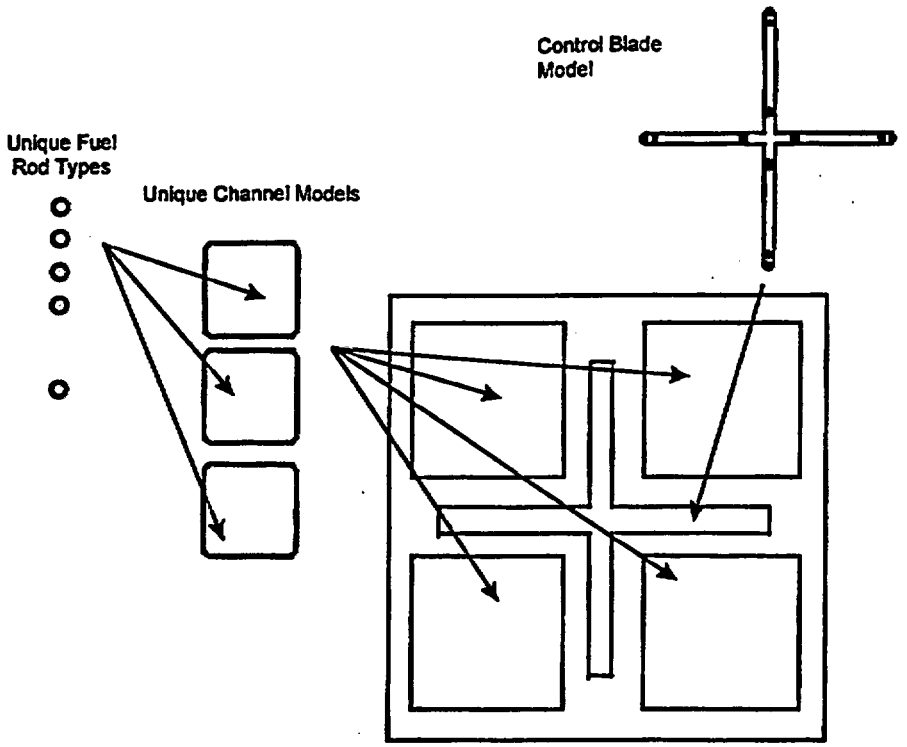

Figure 5-10. Core Arrangement

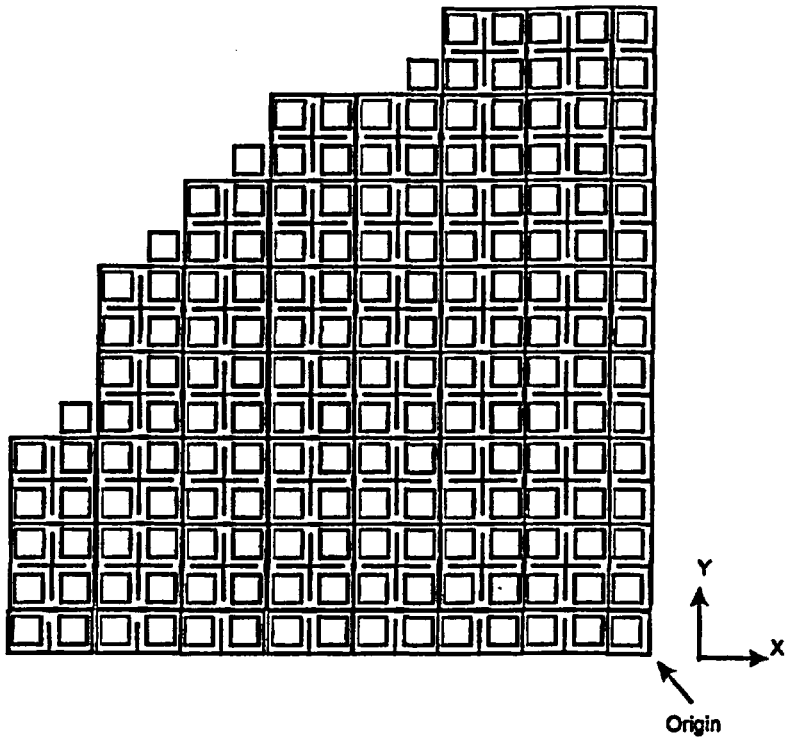

5.4.2. Link to Data Structures

The classes of datasets described in §5.3 are used by the automation process to create MCNP input representations for the structures described in §5.2. The dataset classes where information for each component is provided is delineated in Table 5-9. For all the components except the fuel pellets within the fuel rods, material definitions are provided in the Core Structural Material datasets.

Table 5-9. Location of Data for Core Structures

Structure	Dataset Class
Vessel	Core Geometry
Core Shroud	Core Geometry
Axial Ends	Core Geometry
Control Blades	Control Blade
Instrument Dry Tubes	Core Geometry
Axial Structure of Fuel Assembly	Core Geometry/Lattice Geometry
Channel	Lattice Geometry
Fuel Assembly Spacer Grids	Lattice Geometry
Fuel Rods	Lattice Geometry
Water Rods	Lattice Geometry

5.4.3. Program Flow

The program flow to transform the instructions from the user and the contents of the appropriate datasets into card image input representations for MCNP is shown in Figure 5-11.

Figure 5-11. Top Level Flowchart for Automation Software Routine

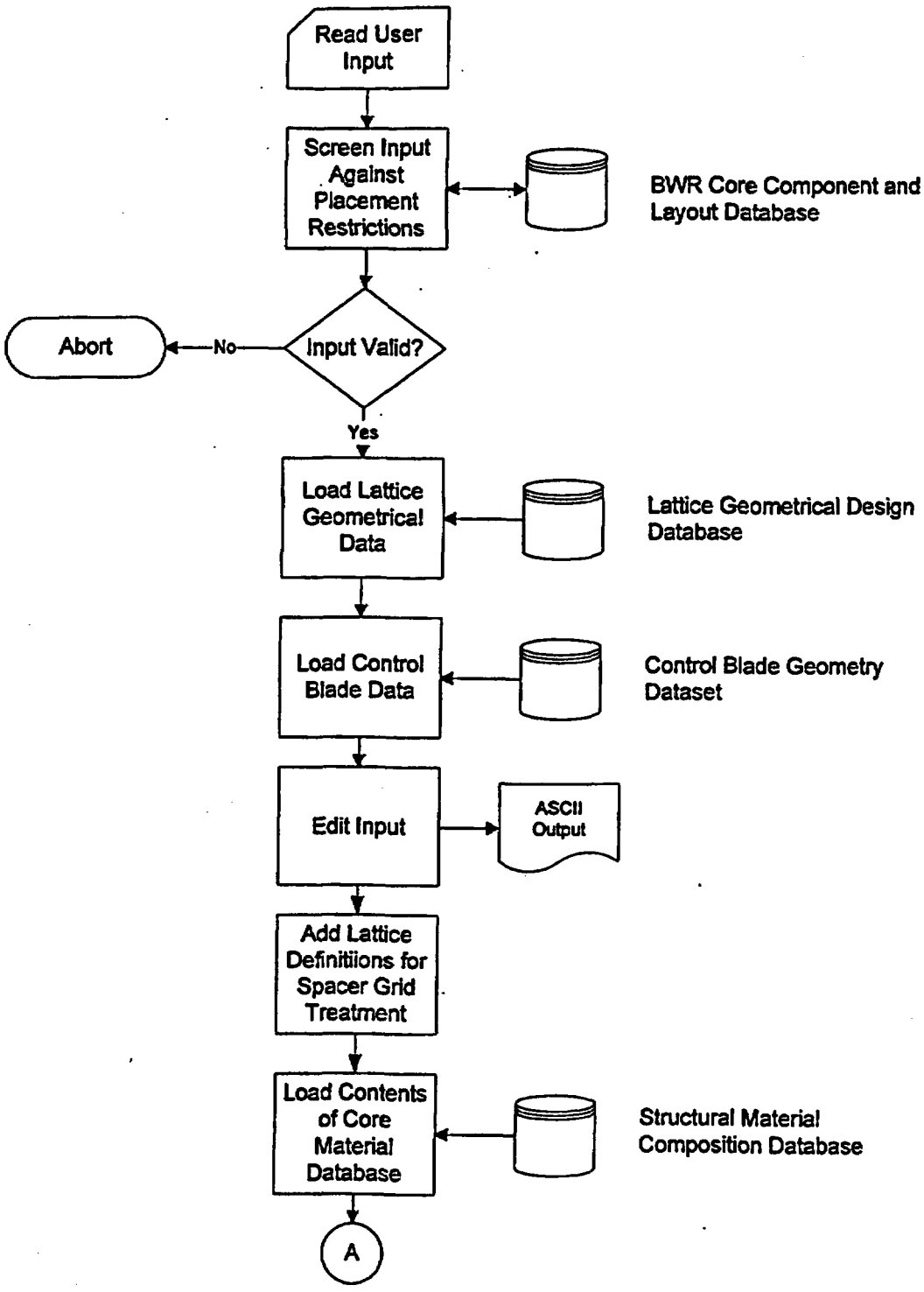

Figure 5-11 (cont'd)

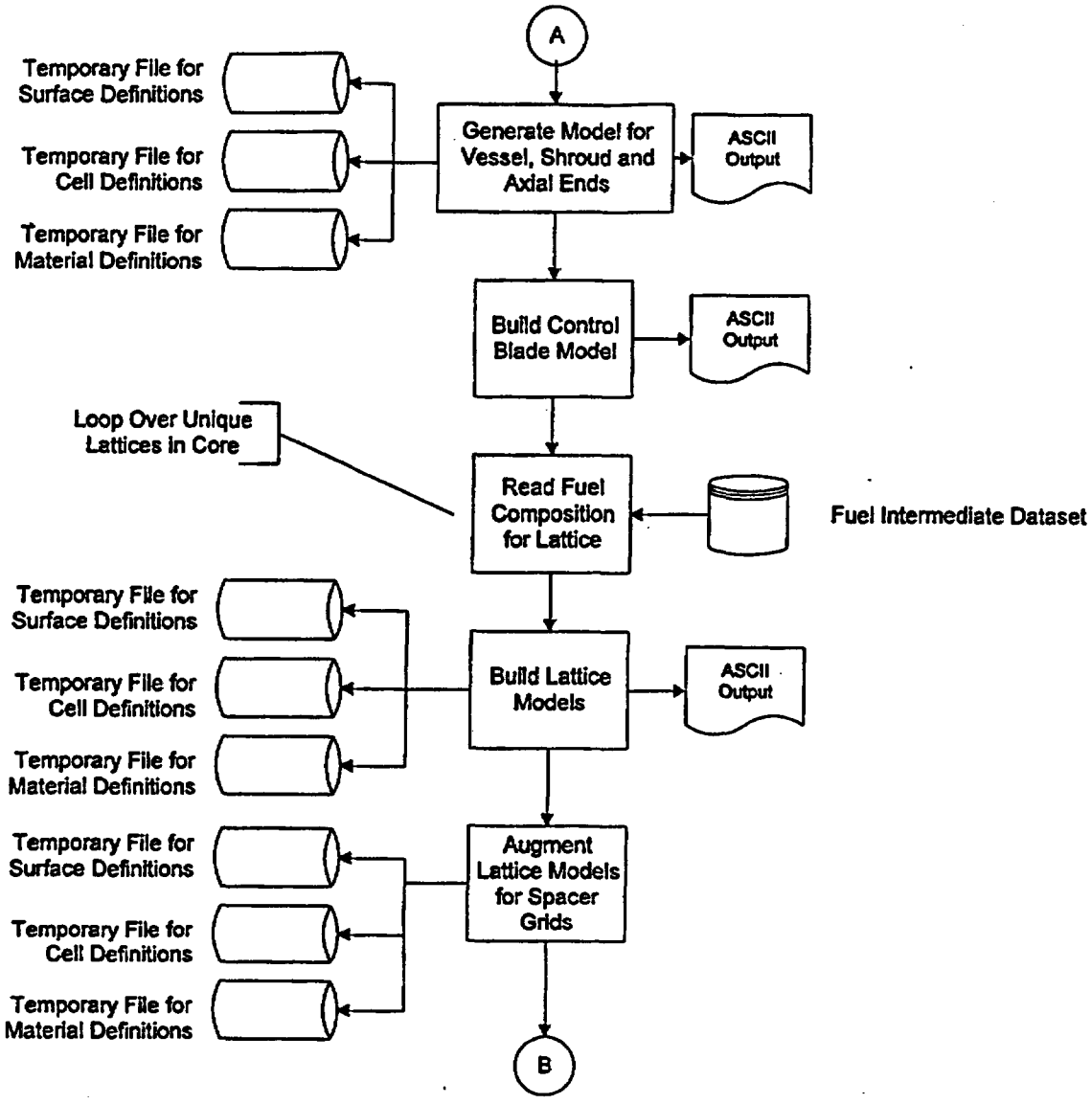

Figure 5-11 (cont'd)

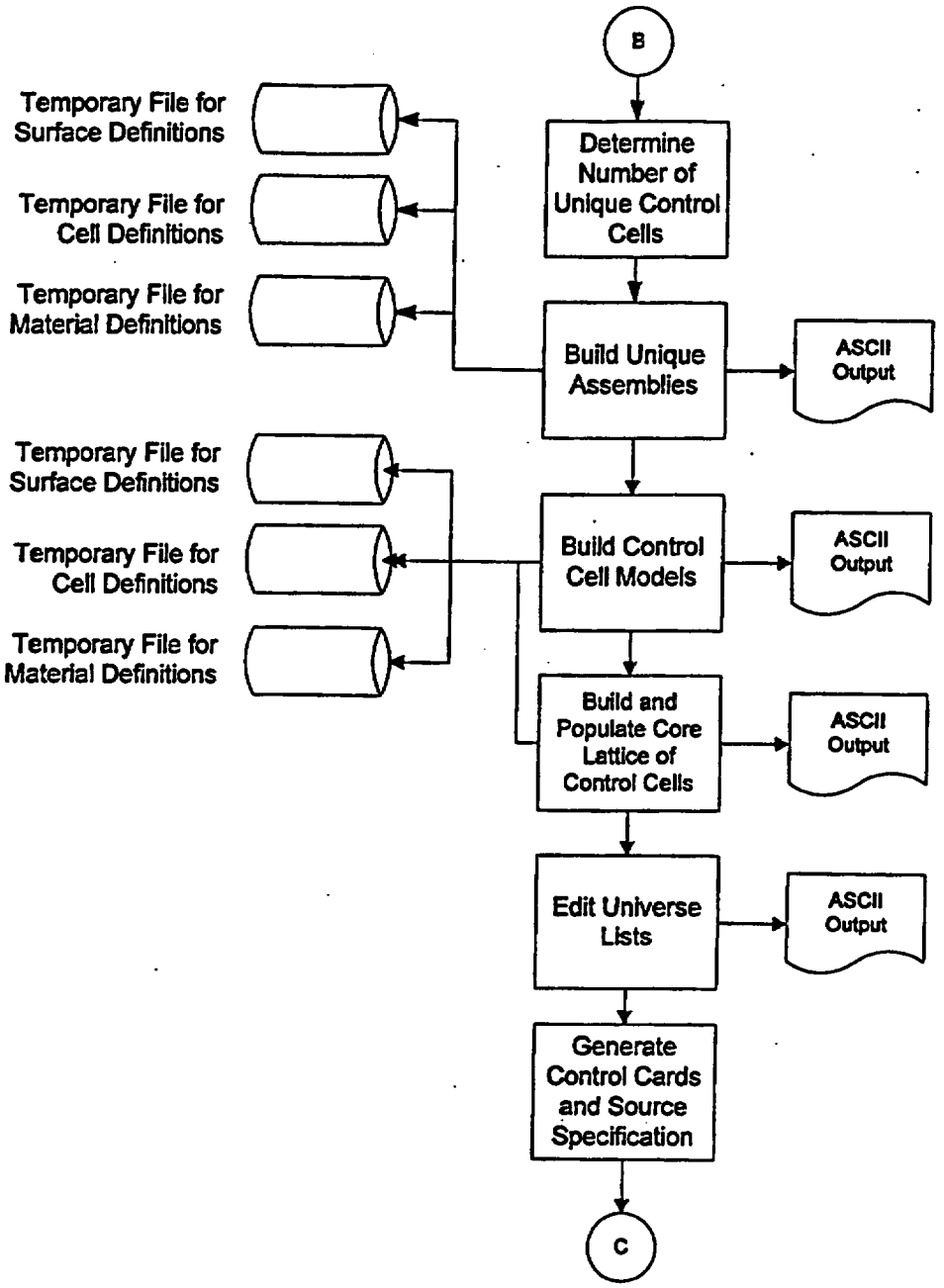

Figure 5-11 (cont'd)

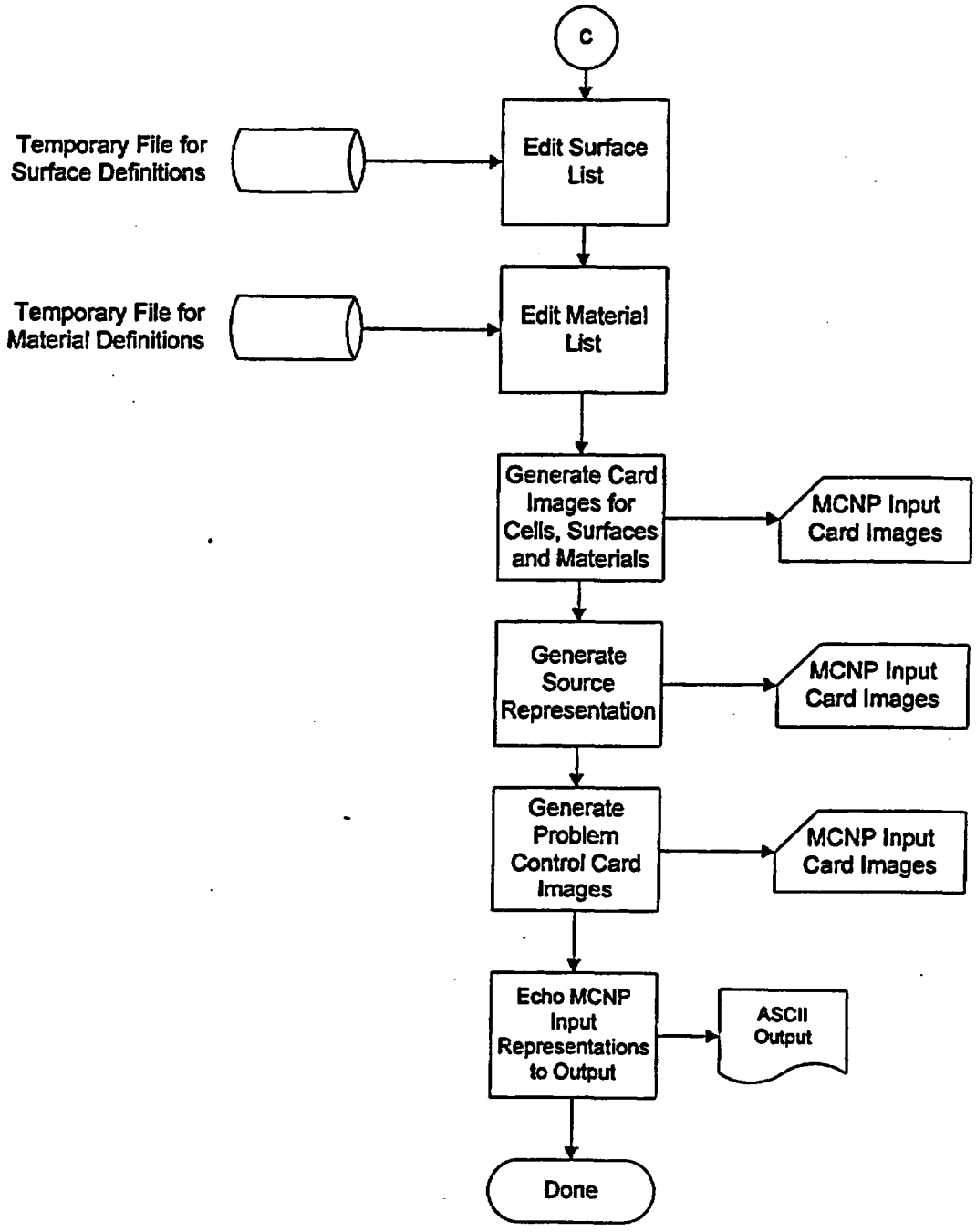

5.5. Conventions for Surface, Cell and Material Numbering

In order to provide consistent generation of MCNP input decks for a variety of fuel and control rod designs and core sizes, the assignment of indices for cells, surfaces and materials is performed sequentially by BLINK. However, the order of the indices assigned follows the order shown in Table 5-10. Note that while the cells will appear in this order in the input deck, the indices for the components may not be so ordered. This is because MCNP generates special indices for translated cells; therefore, low numbered cell indices are reserved for such cells. While this could be a consideration for surfaces, there are many fewer surfaces than cells due to the elimination of redundant surfaces.

Table 5-10. Order of Indices

Relative Position	Components
1	Vessel, Shroud and Axial Region Outside Active Fuel
2	Control Blade
3	Fuel Lattice
4	Fuel Assemblies
5	Control Cells
6	Active Core Region
7	Control Cell Lattice

5.6. Development of MCNP Input for Quad Cities Unit 1, BOL, Criticality Calculations

To support the integration testing of the automation, the previously performed calculations for the beginning-of-life (BOL) core of the Quad Cities Unit 1 unit were reiterated. The development of the input for the automation is provided in Attachment XII.

5.7. Development of MCNP Input for Quad Cities Unit 2, Cycle 13, Criticality Calculations

Four critical reactor startup tests performed during Cycle 13 of the Quad Cities Unit 2 core were modeled with MCNP. These are identified in Table 5-11 (see the Quad Cities Unit 2 CRC Data Report, §4.3) and the development of the input for the previously described automation is provided in Attachment XVIII.

Table 5-11. Critical Experiments Performed in Cycle 13, in Quad Cities Unit 2

Cycle Exposure (MWd/t)	Identifier
0.0	QC2BOC13
201.61	QC2C13CP10
2257.20	QC2C13CP11
6489.46	QC2C13CP13

5.8. Development of MCNP Input for Quad Cities Unit 2, Cycle 14, Criticality Calculations

Two critical reactor startup tests performed during Cycle 14 of the Quad Cities Unit 2 core were modeled with MCNP. These are identified in Table 5-12 (as before, these are from the Quad Cities Unit 2 CRC Data Report, §4.3) and the development of the input for the previously described automation is provided in Attachment XIX.

Table 5-12. Critical Experiments Performed in Cycle 14, in Quad Cities Unit 2

Cycle Exposure (MWd/t)	Identifier
0.0	QC2BOC14
4238.45	QC2C14CP16

6. Results

The results for the CRC reactivity analysis cases for Quad Cities Unit 2, Cycles 13 and 14, are shown in Table 6-1 and Illustrated in Figure 6-1.

Table 6-1. Results for CRC Reactivity Calculations

Identifier	EFPD	Exposure (MWD/t)	k_{eff}	σ
Best Estimate				
QC2BOC13[a]	0.00	0.00	1.02122	0.00027
QC2BOC13[b]	0.00	0.00	0.98992	0.00026
QC2C13CP10	10.00	201.61	0.99525	0.00024
QC2C13CP11	123.00	2257.20	1.00254	0.00025
QC2C13CP13	325.00	6489.46	1.03404	0.00026
QC2BOC14[a]	0.00	0.00	1.01929	0.00028
QC2BOC14[b]	0.00	0.00	1.00293	0.00034
QC2C14CP16	211.00	4238.45	1.00176	0.00036
Principal Isotope				
QC2BOC13[a]	0.00	0.00	1.03132	0.00027
QC2C13CP10	10.00	201.61	1.00927	0.00027
QC2C13CP11	123.00	2257.20	1.01553	0.00027
QC2C13CP13	325.00	6489.46	1.05023	0.00027
QC2BOC14[a]	0.00	0.00	1.02855	0.00027
QC2C14CP16	211.00	4238.45	1.01582	0.00031
Principal Actinide				
QC2BOC13[a]	0.00	0.00	1.07578	0.00027
QC2C13CP10	10.00	201.61	1.06023	0.00025
QC2C13CP11	123.00	2257.20	1.06666	0.00028
QC2C13CP13	325.00	6489.46	1.05912	0.00026
QC2BOC14[a]	0.00	0.00	1.06990	0.00030
QC2C14CP16	211.00	4238.45	1.06440	0.00033
Actinide Only				
QC2BOC13[a]	0.00	0.00	1.07690	0.00025
QC2C13CP10	10.00	201.61	1.06113	0.00026
QC2C13CP11	123.00	2257.20	1.06760	0.00027
QC2C13CP13	325.00	6489.46	1.10745	0.00024
QC2BOC14[a]	0.00	0.00	1.07065	0.00027
QC2C14CP16	211.00	4238.45	1.06615	0.00032

[a]. Fresh Fuel Assemblies have Non-smeared Nodal Treatment
[b]. Fresh Fuel Assemblies have Smeared Nodal Treatment

Figure 6-1. Results for CRC Reactivity Calculations

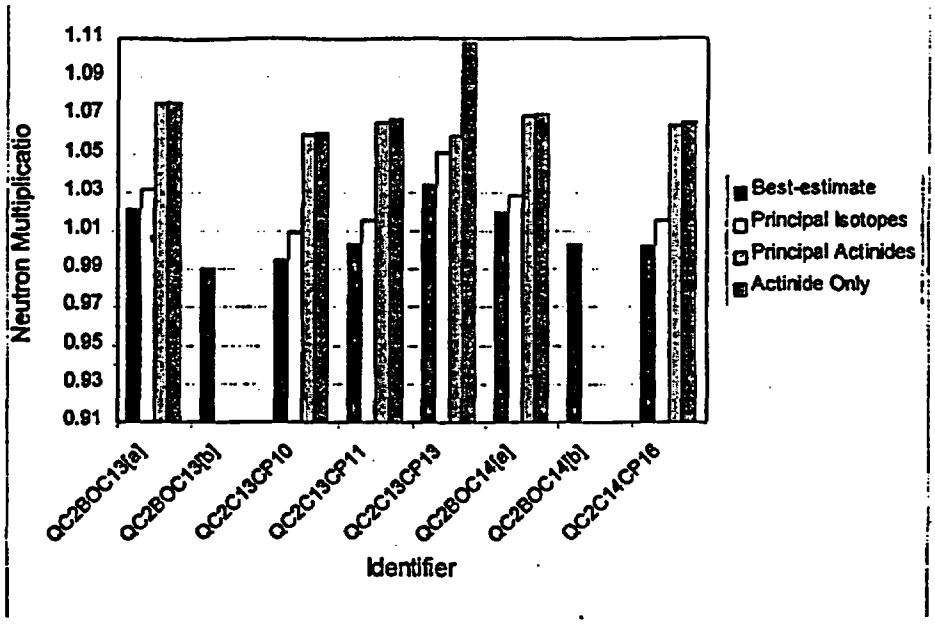

6.1. Treatment of Gadolinia

Gadolinia incorporated as an integral burnable absorber markedly suppresses the power in the fuel rods in which it is incorporated. Since the SAS2H sequence lumps the fuel constituents into a single mass to perform depletion calculations, the significant spatial self-shielding inherent in such fuel rods is lost. Thus the gadolinia depletes uniformly rather than from the surface to the center of a gadolinia-laden fuel rod (the "onion skin" effect). This results in premature burn-out of the gadolinia isotopes. An allied effect is the distribution of gadolinia in the fuel rods in a given lattice. When the gadolinia is segregated in the relatively few rods in which it was originally placed, the effect on reactivity is less than if it is uniformly distributed among all the fuel rods in the lattice. This is because most of the gadolinia is spatially self-shielded and the reactivity contribution is suppressed in only the few fuel rods in which it is incorporated.

To illustrate the effect of the gadolinia depletion rates obtained from the SAS2H analysis, the gadolinia inventory was tabulated for two nodes in a GE 8x8 assembly with a large-central water rod loaded into the core in Cycle 13. The first selected node – designated as "Node 3" – is in the power shaping section of the fuel assembly, where the reaction rates may be assumed to be high, particularly in the first half of the cycle. This particular lattice has an average enrichment of 3.32 w/o (here and subsequently the symbol "w/o" represents the weight percentage) with two gadolinia-bearing fuel rods with a Gd_2O_3 concentration of 3.0 w/o and eight gadolinia-bearing fuel rods with a concentration of 4.0 w/o. The node is 12.0 inches (30.48 cm) in length. These values are provided in Table 6-2 and illustrated in Figure 6-2. The second node selected in this assembly – designated as "Node 8" – is near the top of core, in the "shutdown zone." This lattice has an average enrichment of 3.48 w/o and the same gadolinia loading. This node is 18.0 inches (45.72 cm) long. Since this second node is near the top of the core, the power should be less than that of the first node. The gadolinia inventory values for this node are shown in Table 6-3 and illustrated in Figure 6-3.

The "weighting factor" is the product of the weight percentage of the gadolinium isotope in the node and the 2200 m/s absorption cross section (Reference 7.12, page 9, hereafter cited as the "Chart of the Nuclides) for that isotope. Thus the change in the sum of these weighting factors over time is a measure of capability of the gadolinia loading to reduce fuel assembly reactivity. As may be seen from Figure 6-2, the effective weighting factor in Node 3 drops rapidly over the first 2000 MWD/MTU, indicating the rapid burnout of the gadolinium isotopes with high thermal absorption cross sections. For Node 8, Figure 6-3 shows a less dramatic decrease. These two weighting factor curves are compared in Figure 6-4.

The results shown in Figure 6-1 may now be understood in light of the known behavior of the gadolinia burnout. Two effects are present. The first is the effect of the uniform application of the exposed lattice isotopics to all the fuel rods, as seen in the change in neutron multiplication between QC2BOC13[a] and QC2BOC13[b], and QC2BOC14[a] and QC2BOC14[b], while the second is the premature depletion of the neutronically important gadolinium isotopes. The first effect markedly decreases the spatial self-shielding of the gadolinium and increases its negative reactivity contribution to the core. This effect is fairly uniform as long as there is substantial gadolinia remaining in the newly inserted fuel; however, when the gadolinia is effectively gone due to premature burnout, as in QC2C13CP13, the reactivity "hold down" supplied by the gadolinia also disappears and the inherent excess reactivity of the core is revealed. This same phenomenon is probably at work in Cycle 14, and the eigenvalue of QC2C14CP16 is still reduced by the uniformly distributed gadolinia since the effective exhaustion of gadolinia has not yet occurred.

As expected, the principal isotope results track the best-estimate results well, indicating that no significant effect is omitted by assuming the abbreviated nuclide set. Further, it may be seen that the reactivity increment accepted by omitting the less important fission products is about 1%, most of which is probably from ^{149}Sm.

The effect of eliminating all of the fission products in the principal actinide and actinide only cases produces another increase in reactivity; however, the differences among the results are somewhat softened, probably by the redistribution of power caused by the elimination of the fission products, but this remained to be confirmed. (N.B., the results for QC2C13CP13PA appear to be too low based on the other results and clearly there should be better agreement between the principal actinide and actinide-only results.)

Table 6-2. Gadolinium Inventory for Node 3

	Description	Critical Point 9		Critical Point 10		Critical Point 11	
	Cycle Exposure	0.00 MWD/MTU		201.61 MWD/MTU		2257.20 MWD/MTU	
Gadolinium Isotope	σ_a^{2200} (barns) [b]	Weight Percentage	Weighting Factor	Weight Percentage	Weighting Factor	Weight Percentage	Weighting Factor
152	900	0.00110	0.99	0.00109	0.98	0.00107	0.96
154	60	0.01173	0.70	0.01191	0.71	0.01172	0.70
155	61000	0.08013	4887.93	0.07815	4767.15	0.04267	2603.05
156	2	0.11150	0.22	0.11475	0.23	0.15021	0.30
157	255000	0.08580	21879.00	0.07629	19453.95	0.00745	1900.97
158	2.4	0.13710	0.33	0.14514	0.35	0.21466	0.52
160	1	0.12220	0.12	0.11971	0.12	0.00004	0.00
	Fuel Mass (g)	16122.9	26769.30	16216.1	24223.49	16194.8	4506.51

[a]. Note that the core-averaged exposure increment has been carried across the cycle break.
[b]. These values are from the Chart of the Nuclides.

Table 6-2 (cont'd)

	Critical Point 13 [a]		Critical Point 14 [a]		Critical Point 16 [a]	
	6489.46 MWD/MTU		7735.27 MWD/MTU		11973.72 MWD/MTU	
Gadolinium Isotope	Weight Percentage	Weighting Factor	Weight Percentage	Weighting Factor	Weight Percentage	Weighting Factor
152	0.00101	0.91	0.00100	0.90	0.00000	0.00
154	0.01105	0.66	0.01087	0.65	0.00004	0.00
155	0.00005	2.91	0.00005	3.21	0.00000	0.17
156	0.19232	0.38	0.19196	0.38	0.00196	0.00
157	0.00003	8.53	0.00003	8.36	0.00000	1.05
158	0.22353	0.54	0.22359	0.54	0.00058	0.00
160	0.00082	0.00	0.00072	0.00	0.00004	0.00
	16187.3	13.94	16186.8	14.04	16112.7	1.23

Table 6-3. Gadolinium Inventory for Node 8

	Description	Critical Point 9		Critical Point 10		Critical Point 11	
	Cycle Exposure	0.00 MWD/MTU		201.61 MWD/MTU		2257.20 MWD/MTU	
Gadolinium Isotope	σ_a^{2200} (barns)	Weight Percentage	Weighting Factor	Weight Percentage	Weighting Factor	Weight Percentage	Weighting Factor
152	900	0.00110	0.99	0.00109	0.98	0.00107	0.96
154	60	0.01173	0.70	0.01191	0.71	0.01170	0.70
155	61000	0.08013	4887.93	0.07898	4817.54	0.05541	3379.95
156	2	0.11150	0.22	0.11412	0.23	0.13777	0.28
157	255000	0.08580	21879.00	0.07856	20033.82	0.02226	5676.30
158	2.4	0.13710	0.33	0.14265	0.34	0.19974	0.48
160	1	0.12220	0.12	0.11950	0.12	0.11950	0.12
	Fuel Mass (g)	24184.4	26769.30	24309.9	24853.74	24217.1	9058.79

[a]. Note that the core-averaged exposure increment has been carried across the cycle break.

Table 6-3 (cont'd)

	Critical Point 13		Critical Point 14		Critical Point 16	
	6489.46 MWD/MTU		7735.27 MWD/MTU		11973.72 MWD/MTU	
Gadolinium Isotope	Weight Percentage	Weighting Factor	Weight Percentage	Weighting Factor	Weight Percentage	Weighting Factor
152	0.00101	0.91	0.00099	0.89	0.00000	0.00
154	0.01117	0.67	0.01097	0.66	0.00004	0.00
155	0.00067	40.70	0.00009	5.75	0.00000	0.18
156	0.19193	0.38	0.19216	0.38	0.00148	0.00
157	0.00007	18.21	0.00006	15.70	0.00001	1.30
158	0.22305	0.54	0.22353	0.54	0.00047	0.00
160	0.00078	0.00	0.00078	0.00	0.00003	0.00
		61.41		23.92		1.49
	23997.9		24002.4		23804.3	

Figure 6-2. Gadolinia Inventory for Node 3

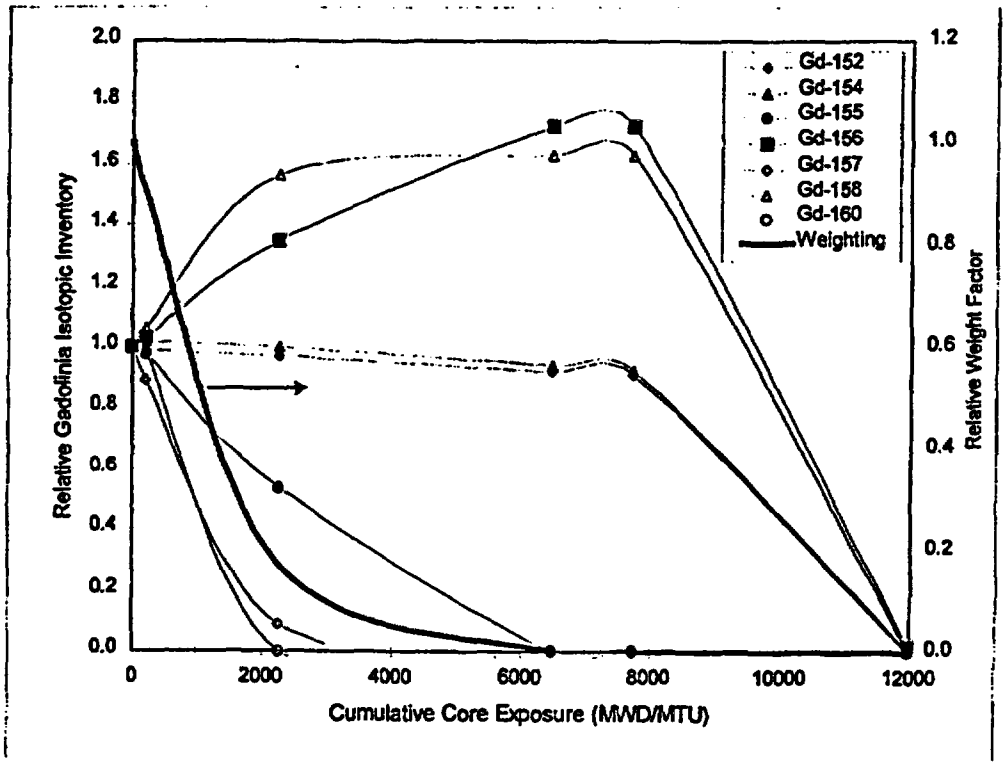

Figure 6-3. Gadolinia Inventory for Node 8

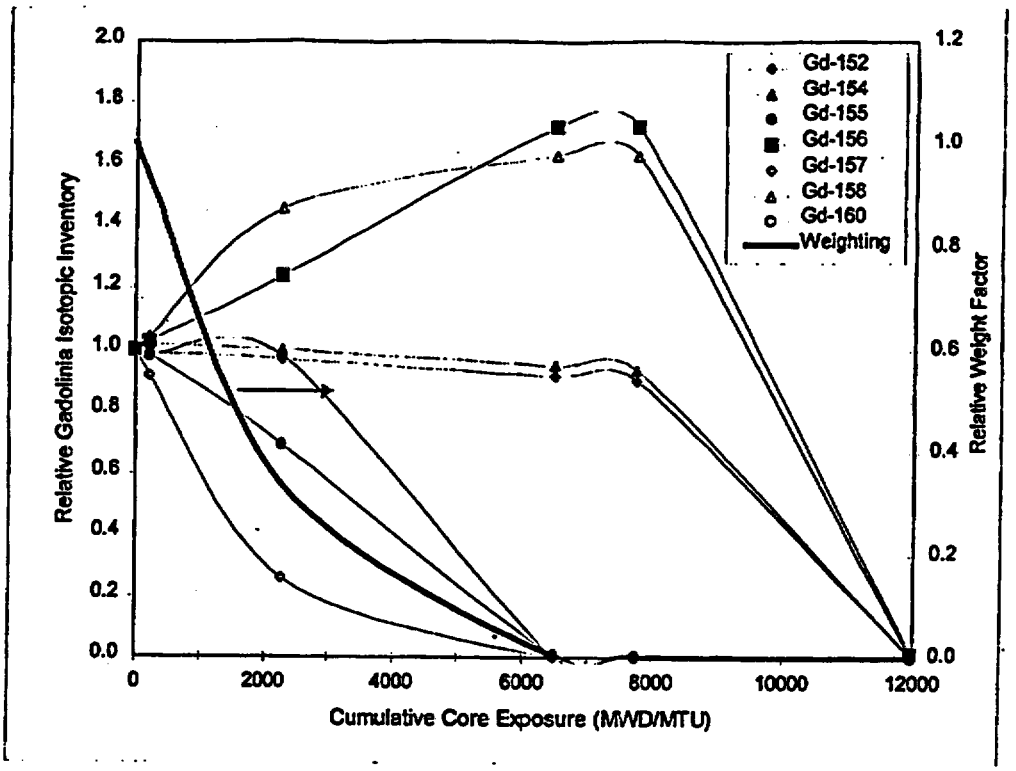

Figure 6-4. Comparison of Loss in Gadolinia Effectiveness

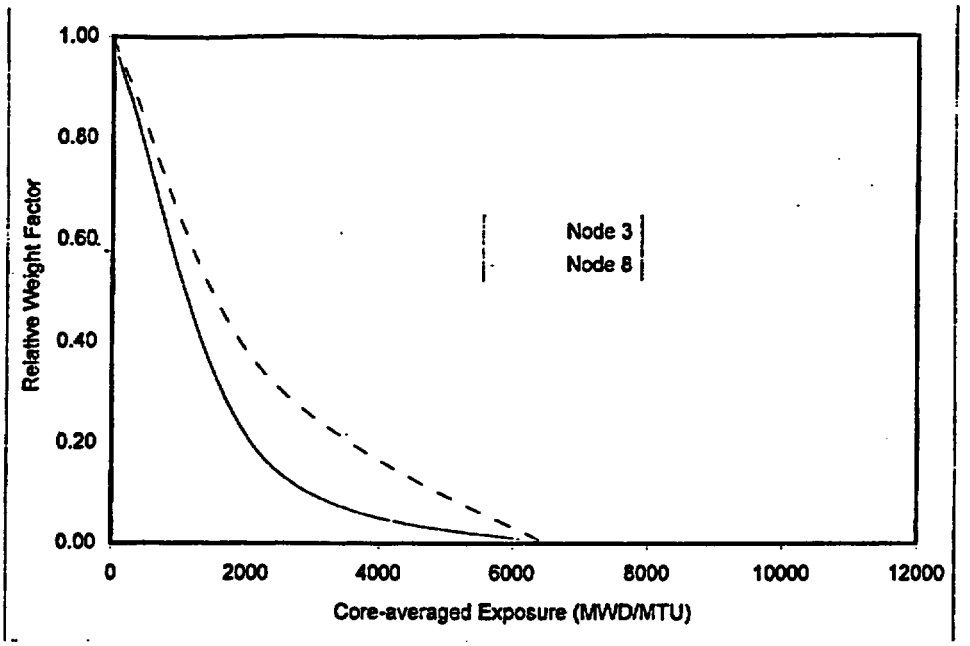

6.2. Conclusions

While the Quad Cities Unit 2 CRC reactivity calculations substantially under-predict the neutron multiplication for startup tests, several modeling characteristics have been identified that lead to this result. These suggest that the following actions be taken when these calculations are revised:

1. improve the gadolinia treatment by introducing a lattice physics code that properly treats the gadolinia spatial self-shielding;

2. improve the treatment of gadolinia by partitioning its placement for exposed fuel, viz., put depleted gadolinia only into fuel rods that originally contained it (note that the introduction of a two-dimensional lattice physics code eliminates this concern);

3. include control blade insertion in the depletion calculations; and

4. improve fuel temperature treatment to model fuel-to-cladding gap closure.

For future BWR CRC evaluations, an effort should be made to improve the quality of the three-dimensional data obtained from the utilities.

7. References

7.1 Briesmeister, J. F., Ed., *MCNP™ – A General Monte Carlo N-Particle Transport Code, Version 4A*, LA-12625-M, Los Alamos National Laboratory (LANL), November 1993. Technical Information Center Number (TIC #): 233782.

7.2 Briesmeister, J. F., Ed., *MCNP™ – A General Monte Carlo N-Particle Transport Code, Version 4B*, LA-12625-M, LANL, March 1997. MOL.19980624.0328.

7.3 *Software Qualification Report for the SCALE Modular Code System Version 4.3*, SCALE Version 4.3 Computer Software Configuration Item (CSCI): 30011 V4.3, DI#: 30011-2002 REV 01, CRWMS M&O. MOL.19970731.0884.

7.4 *CRC Depletion Calculations for Quad Cities Unit 2*, Document Identification Number (DI#): B00000000-01717-0210-00009 REV 00, Civilian Radioactive Waste Management System, Management and Operating Contractor (CRWMS M&O). MOL.19980730.0510.

7.5 *Software Qualification Report for MNCP 4A, A General Monte Carlo N-Particle Transport Code*, CSCI: 30006 V4A, DI#: 30006-2003 REV 02, CRWMS M&O. MOL.19961028.0272.

7.6 *Software Qualification Report for MNCP 4B2, A General Monte Carlo N-Particle Transport Code*, CSCI: 30006 V4B2LV, DI#: 30033-2003 REV 01, CRWMS M&O. MOL.19980622.0637.

7.7 *MCNP CRC Reactivity Calculation for Quad Cities BWR*, DI#: BBA000000-01717-0200-00146 REV 00, CRWMS M&O. MOL.19971229.0128.

7.8 *Core Design and Operating Data for Cycles 1 and 2 of Quad Cities 1*, EPRI NP-240, Electric Power Research Institute, Palo Alto, CA, November 1976. TIC #: 237267.

7.9 *Summary Report of Commercial Reactor Criticality Data for Quad Cities Unit 2*, DI#: B00000000-01717-5705-00096 REV 00, CRWMS M&O. MOL.19980730.0509.

7.10 *Disposal Criticality Analysis Methodology Technical Report*, DI#: B00000000-01717-5705-00020 REV 01, CRWMS M&O. MOL.19980127.0095.

7.11 *Topical Report on Actinide-Only Burnup Credit for PWR Spent Nuclear Fuel Packages*, DOE/RW-0472 Rev. 1, Department of Energy Office of Civilian Radioactive Waste Management, Washington, D.C., May 1997. MOV.19970416.0125.

7.12 *Nuclides and Isotopes (Incorporating the Chart of the Nuclides)*, 14th Edition, General Electric Company, San Jose, CA, 1989. TIC #: 201637.

7.13 *CRC Reactivity Calculation for Quad Cities Unit 2*, DI#: B00000000-01717-0210-00010 REV 00, CRWMS M&O, Attachment I – Data Cartridges. MOL.19980810.0213.

8. Attachments

The attachments that support the work in this document are listed in Table 8-1.

Table 8-1. List of Attachments

Attachment	Contents	Number of Pages
I	Index for Computer Output Files Supporting this Analysis (moved to Attachment 7.13)	7 [a]
II	Development of Core Geometry Datasets	13
III	Development of Core Materials Dataset	43
IV	Development of Lattice Geometry Datasets	16
V	Development of Control Blade Geometry Dataset	12
VI	Development of Algorithms and Encoding for Linkage Automation	41
VII	Specification of Intermediate Datasets for Fuel Materials	12
VIII	Development of Automation to Create Intermediate Fuel Materials Datasets	37
IX	Methodology for Building Control Blade Model	15
X	Methodology for Building GE 7x7 Fuel Lattice Model	16
XI	Methodology for Building GE 8x8 with Small Water Rods Model	14
XII	Creation of MCNP Model for Quad Cities Unit 1, Beginning-of-Life Core	9
XIII	MCNP Input Deck Generated by BLINK, Version 0, for QC1, BOL	59
XIV	Listing of Routines and Functions for BLINK, Version 0	241
XV	Listing of Routines and Functions for IDSGEN, Version 0	51
XVI	Methodology for Building GE 8x8 with Large Central Water Rod Model	15
XVII	Algorithms and Encoding to Produce BLINK, Version 1	~~13~~
XVIII	Creation of MCNP Model for Quad Cities Unit 2 Exposed Core CRC's for Cycle 13	~~28~~
XIX	Creation of MCNP Model for Quad Cities Unit 2 Exposed Core CRC's for Cycle 14	21
XX	Listing of Routines and Functions for BLINK, Version 1	180

DCN 04/24/98

[a]. This is the number of pages in the hard-copy listing of contents of the data cartridges.

Table of Contents

Contents	Page
1. Introduction	3
2. References	7

List of Tables

Table	Contents	Page
Table 1-1	Summary of Computer Output Supporting this Analysis	3

1. Introduction

This attachment provides a description of the computer output produced in the course of this analysis. This output is provided on magnetic tapes (also known as data cartridges). An enumeration and a summary of the contents of the computer output files is located in Table 1-1. The magnetic tapes were written using a Colorado Model T1000e External Parallel Port Backup System for personal computers. (These tapes have been moved to Reference 2.1). Note that the file sizes shown in the table are the MS-DOS file sizes. Sizes from Windows-95

Table 1-1 Summary of Computer Output Supporting this Analysis

File Name	Size (bytes)	Date	Time	Description
IDSGEN Output - Tape 1				
CP14SIO.SUM	113,403	7/3/98	1:26p	Consolidated IDSGEN Output for QC2BOC14 Critical Point with Best Estimate Isotopics and "Smeared" Fresh Fuel Loading
CP10IO.SUM	19,760,450	7/3/98	10:40a	Consolidated IDSGEN Output for QC2C13CP10 Critical Point with Best-estimate Isotopics
CP10PAIO.SUM	9,553,097	7/3/98	11:17a	Consolidated IDSGEN Output for QC2C13CP10 Critical Point with Principal Actinide Isotopics
CP10PIIO.SUM	11,931,000	7/3/98	10:50a	Consolidated IDSGEN Output for QC2C13CP10 Critical Point with Principal Isotope Isotopics
CP11AOIO.SUM	9,224,751	7/3/98	1:21p	Consolidated IDSGEN Output for QC2C13CP11 Critical Point with Actinide-only Isotopics
CP11IO.SUM	20,128,638	7/3/98	10:42a	Consolidated IDSGEN Output for QC2C13CP11 Critical Point with Best-estimate Isotopics
CP11PAIO.SUM	9,623,647	7/3/98	11:17a	Consolidated IDSGEN Output for QC2C13CP11 Critical Point with Principal Actinide Isotopics
CP11PIIO.SUM	12,034,169	7/3/98	10:51a	Consolidated IDSGEN Output for QC2C13CP11 Critical Point with Principal Isotope Isotopics
CP13AOIO.SUM	9,122,495	7/3/98	1:22p	Consolidated IDSGEN Output for QC2C13CP13 Critical Point with Actinide-only Isotopics
CP13IO.SUM	20,202,176	7/3/98	10:44a	Consolidated IDSGEN Output for QC2C13CP13 Critical Point with Best-estimate Isotopics
CP13PAIO.SUM	9,553,097	7/3/98	11:18a	Consolidated IDSGEN Output for QC2C13CP13 Critical Point with Principal Actinide Isotopics
CP13PIIO.SUM	11,934,486	7/3/98	10:53a	Consolidated IDSGEN Output for QC2C13CP13 Critical Point with Principal Isotope Isotopics
CP14AOIO.SUM	7,643,633	7/3/98	1:23p	Consolidated IDSGEN Output for QC2BOC14 Critical Point with Actinide-only Isotopics
CP14IO.SUM	16,695,514	7/3/98	10:46a	Consolidated IDSGEN Output for QC2BOC14 Critical Point with Best-estimate Isotopics
CP14PAIO.SUM	7,969,457	7/3/98	1:16p	Consolidated IDSGEN Output for QC2BOC14 Critical Point with Principal Actinide Isotopics
CP14PIIO.SUM	9,937,595	7/3/98	11:10a	Consolidated IDSGEN Output for QC2BOC14 Critical Point with Principal Isotope Isotopics
CP16AOIO.SUM	9,077,720	7/3/98	1:24p	Consolidated IDSGEN Output for QC2C14CP16 Critical Point with Actinide-only Isotopics
CP16IO.SUM	20,294,019	7/3/98	10:47a	Consolidated IDSGEN Output for QC2C14CP16 Critical Point with Best-estimate Isotopics
CP16PIIO.SUM	11,863,123	7/3/98	11:14a	Consolidated IDSGEN Output for QC2C14CP16 Critical Point with Principal Isotope Isotopics
CP9AOIO.SUM	7,509,033	7/3/98	1:17p	Consolidated IDSGEN Output for QC2BOC13 Critical Point with Actinide-only Isotopics
CP9IO.SUM	16,164,373	7/3/98	10:39a	Consolidated IDSGEN Output for QC2BOC13 Critical Point with Best-estimate Isotopics
CP9PAIO.SUM	7,831,109	7/3/98	11:16a	Consolidated IDSGEN Output for QC2BOC13 Critical Point with Principal Actinide Isotopics

File Name	Size (bytes)	Date	Time	Description
CP9PIIO.SUM	9,775,577	7/3/98	10:48a	Consolidated IDSGEN Output for QC2BOC13 Critical Point with Principal Isotope Isotopics
CP9SIO.SUM	83,339	7/3/98	1:26p	Consolidated IDSGEN Output for QC2BOC13 Critical Point with Best Estimate Isotopics and "Smeared" Fresh Fuel Loading
CP10AOIO.SUM	9,193,377	7/3/98	1:19p	Consolidated IDSGEN Output for QC2C13CP10 Critical Point with Actinide-only Isotopics
BOLIO.SUM	189,933	7/3/98	3:52p	Consolidated IDSGEN Output for Quad Cities Unit Beginning of Life Case
BLINK Output - Tape 2				
QC1C1.OUT	702,845	7/31/98	3:09p	BLINK Output for Quad Cities Unit Beginning of Life Case Prepared with Version 1:- of BLINK
cp10b.out	27,229,289	7/31/98	3:12p	BLINK Output for QC2C13CP10 Critical Point with Best Estimate Isotopics
cp14b.out	23,068,452	7/31/98	3:17p	BLINK Output for QC2BOC14 Critical Point with Best Estimate Isotopics
cp11b.out	27,347,162	7/31/98	3:13p	BLINK Output for QC2C13CP11 Critical Point with Best Estimate Isotopics
cp9sb.out	22,103,321	7/31/98	3:20p	BLINK Output for QC2BOC13 Critical Point with Smeared Best Estimate Isotopics
cp13b.out	27,371,002	7/31/98	3:15p	BLINK Output for QC2C13CP13 Critical Point with Best Estimate Isotopics
cp16b.out	27,731,571	7/31/98	3:18p	BLINK Output for QC2C14CP16 Critical Point with Best Estimate Isotopics
cp10pib.out	26,213,003	7/31/98	3:29p	BLINK Output for QC2C13CP10 Critical Point with Principal Isotopic Set
cp13pib.out	26,217,402	7/31/98	3:32p	BLINK Output for QC2C13CP13 Critical Point with Principal Isotopic Set
cp14sb.out	23,045,527	7/31/98	3:26p	BLINK Output for QC2BOC14 Critical Point with Smeared Best Estimate Isotopics
cp11pib.out	26,249,261	7/31/98	3:30p	BLINK Output for QC2C13CP11 Critical Point with Principal Isotopic Set
cp9pib.out	21,250,855	7/31/98	3:27p	BLINK Output for QC2BOC13 Critical Point with Principal Isotopic Set
cp14pib.out	22,223,000	7/31/98	3:34p	BLINK Output for QC2BOC14 Critical Point with Principal Isotopic Set
cp16pib.out	26,589,443	7/31/98	3:35p	BLINK Output for QC2C14CP16 Critical Point with Principal Isotopic Set
cp9b.out	22,107,360	7/31/98	3:11p	BLINK Output for QC2BOC13 Critical Point with Best Estimate Isotopics
BLINK Output - Tape 3				
cp9pab.out	20,899,061	7/31/98	3:37p	BLINK Output for QC2BOC13 Critical Point with Principal Actinide Set
cp10pab.out	25,791,340	7/31/98	3:38p	BLINK Output for QC2C13CP10 Critical Point with Principal Actinide Set
cp11pab.out	25,813,991	7/31/98	3:40p	BLINK Output for QC2C13CP11 Critical Point with Principal Actinide Set
cp13pab.out	25,791,328	7/31/98	3:41p	BLINK Output for QC2C13CP13 Critical Point with Principal Actinide Set
cp14pab.out	21,866,987	7/31/98	3:43p	BLINK Output for QC2BOC14 Critical Point with Principal Actinide Set
cp16pab.out	26,161,434	7/31/98	3:45p	BLINK Output for QC2C14CP16 Critical Point with Principal Actinide Set
cp13aob.out	25,729,775	7/31/98	3:50p	BLINK Output for QC2C13CP13 Critical Point with Actinide-only Set
cp16aob.out	26,105,850	7/31/98	3:53p	BLINK Output for QC2C14CP16 Critical Point with Actinide-only Set
cp9aob.out	20,858,218	7/31/98	3:46p	BLINK Output for QC2BOC13 Critical Point with Actinide-only Set

File Name	Size (bytes)	Date	Time	Description
cp10aob.out	25,753,191	7/31/98	3:48p	BLINK Output for QC2C13CP10 Critical Point with Actinide-only Set
cp11aob.out	25,762,199	7/31/98	3:49p	BLINK Output for QC2C13CP11 Critical Point with Actinide-only Set
cp14aob.out	21,824,982	7/31/98	3:51p	BLINK Output for QC2BOC14 Critical Point with Actinide-only Set
MCNP Output - Tape 4				
CP9M.OUT	18,217,792	8/1/98	10:53a	MCNP Output for QC2BOC13 Critical Point with Best Estimate Isotopics
CP10M.OUT	21,686,771	8/1/98	10:53a	MCNP Output for QC2C13CP10 Critical Point with Best Estimate Isotopics
CP11M.OUT	20,212,516	8/3/98	10:37a	MCNP Output for QC2C13CP11 Critical Point with Best Estimate Isotopics
CP13M.OUT	22,219,496	8/3/98	10:38a	MCNP Output for QC2C13CP13 Critical Point with Best Estimate Isotopics
CP14M.OUT	19,328,304	8/3/98	10:39a	MCNP Output for QC2BOC14 Critical Point with Best Estimate Isotopics
CP16M.OUT	23,097,085	8/3/98	10:40a	MCNP Output for QC2C14CP16 Critical Point with Best Estimate Isotopics
CP9SM.OUT	16,383,450	8/3/98	10:40a	MCNP Output for QC2BOC13 Critical Point with Smeared Best Estimate Isotopics
CP14SM.OUT	19,038,100	8/3/98	10:41a	MCNP Output for QC2BOC14 Critical Point with Smeared Best Estimate Isotopics
CP9PIM.OUT	13,584,472	8/3/98	10:41a	MCNP Output for QC2BOC13 Critical Point with Principal Isotopic Set
CP10PIM.OUT	16,649,912	8/3/98	10:42a	MCNP Output for QC2C13CP10 Critical Point with Principal Isotopic Set
CP11PIM.OUT	16,765,837	8/3/98	10:42a	MCNP Output for QC2C13CP11 Critical Point with Principal Isotopic Set
CP13PIM.OUT	16,318,737	8/3/98	10:43a	MCNP Output for QC2C13CP13 Critical Point with Principal Isotopic Set
CP14PIM.OUT	14,462,125	8/3/98	10:43a	MCNP Output for QC2BOC14 Critical Point with Principal Isotopic Set
CP16PIM.OUT	16,902,918	8/3/98	10:44a	MCNP Output for QC2C14CP16 Critical Point with Principal Isotopic Set
QC1C1_M.OUT	2,326,451	8/3/98	10:58a	MCNP Output for Quad Cities Unit 1 BOL CRC Calculation
MCNP Output - Tape 5				
CP9PAM.OUT	12,283,059	8/3/98	10:44a	MCNP Output for QC2BOC13 Critical Point with Principal Actinide Set
CP10PAM.OUT	15,202,836	8/3/98	10:45a	MCNP Output for QC2C13CP10 Critical Point with Principal Actinide Set
CP11PAM.OUT	15,185,595	8/3/98	10:54a	MCNP Output for QC2C13CP11 Critical Point with Principal Actinide Set
CP13PAM.OUT	14,584,690	8/3/98	10:54a	MCNP Output for QC2C13CP13 Critical Point with Principal Actinide Set
CP14PAM.OUT	13,223,335	8/3/98	10:55a	MCNP Output for QC2BOC14 Critical Point with Principal Actinide Set
CP16PAM.OUT	15,267,905	8/3/98	10:55a	MCNP Output for QC2C14CP16 Critical Point with Principal Actinide Set
CP9AOM.OUT	12,355,340	8/3/98	10:56a	MCNP Output for QC2BOC13 Critical Point with Actinide-Only Set
CP10AOM.OUT	14,922,179	8/3/98	10:56a	MCNP Output for QC2C13CP10 Critical Point with Actinide-Only Set
CP11AOM.OUT	14,805,739	8/3/98	2:19p	MCNP Output for QC2C13CP11 Critical Point with Actinide-Only Set
CP13AOM.OUT	14,610,099	8/3/98	2:19p	MCNP Output for QC2C13CP13 Critical Point with Actinide-Only Set
CP16AOM.OUT	15,102,800	8/5/98	3:18p	MCNP Output for QC2C14CP16 Critical Point with Actinide-Only Set

File Name	Size (bytes)	Date	Time	Description
Cp14AOM.OUT	12,777,076	8/5/98	3:17p	MCNP Output for QC2BOC14 Critical Point with Actinide-Only Set

2. References

2.1 *CRC Reactivity Calculation for Quad Cities Unit 2*, DI#: B00000000-01717-0210-00010 REV 00, CRWMS M&O, Attachment I – Data Cartridges. MOL.19980810.0213.

Table of Contents

Contents	Page
1. Introduction	5
2. Dataset Structure and Contents	5
3. Dataset Creation	8
3.1. Dataset Title Record	8
3.2. Namelist Input	8
3.3. Space-delimited Fields	8
3.4. Dataset Identification	8
4. References	13

List of Figures

Figure	Contents	Page
Figure 2-1	Location Indexing for Control Blades and Dry Tubes	7
Figure 3-1	Core Geometry Dataset for 724 Bundle BWR/3	9

List of Tables

Table	Contents	Page
Table 2-1	Contents of Dataset	6

List of Worksheets

Worksheet	Contents	Page
Worksheet 3-1	Namelist Input Development	11

1. Introduction

This attachment describes the creation of the datasets defining the core layout and core support structures. It provides a detailed list of contents for such datasets and documents the creation of the datasets of this type used in the present analysis.

2. Dataset Structure and Contents

The dataset structure is an ASCII-format file that incorporates both FORTRAN Namelist-type input and fields of space-delimited data. The contents of this dataset are given in Table 2-1. In this table the format of each datum is given. The indexing for the locations of the control blades and the in-core instrumentation dry tube are depicted in Figure 2-1. In this figure, the control blade shown has an index of (2,2) and the instrument location also has an index of (2,2). This permits the location of the blades and the instrument dry tubes to be referenced to the same scheme as for the fuel assemblies.

Table 2-1 Contents of Dataset

Mnemonic	Definition	Comments	Format
Title	Dataset Title	Character String -- Describes Application for this Dataset (Class of BWR to which it is Applicable)	Single Line
ncol	Dimensionality of Core	Integer -- Maximum Number of Fuel Assemblies in the Widest Rod of such Assemblies	Namelist
nrow	Dimensionality of Core	Integer -- Maximum Number of Fuel Assemblies in the Longest Column of such Assemblies	Namelist
apitch	Assembly Pitch (cm)	Real -- Always Six Inches (15.34 cm) except for BWR/1 and Advanced Boiling Water Reactor (ABWR)	Namelist
vod	Vessel Outer Diameter (cm)	Defines Lateral Outer Surface for Problem	Namelist
vthick	Vessel Thickness (cm)	Used to Compute Inner Surface of Vessel Cell	Namelist
sod	Core Shroud Outer Diameter (cm)	Defines Shroud and Jet Pump Region	Namelist
sthick	Core Shroud Thickness (cm)	Used to Compute Inner Surface of Core Shroud Cell	Namelist
tutpr	Top of Upper Tie Plate Region (cm) [a]	Defines the First Upper Reflector Region	Namelist
tcgr	Top of Core Grid Region (cm) [a]	Defines the Second Upper Reflector Region	Namelist
bltpr	Bottom of Lower Tie Plate Region (cm) [a]	Defines the First Lower Reflector Region	Namelist
bcpr	Bottom of Fuel Support/Core Plate Region (cm) [a]	Defines the Second Lower Reflector Region	Namelist
dtod	Instrument Dry Tube Outer Diameter (cm)	Used to Dimension Dry Tube	Namelist
dtid	Instrument Dry Tube Inner Diameter (cm)	Used to Dimension Dry Tube	Namelist
mvessel	Material Identifier for Vessel	Combined with Water to Create a Homogenized Material	Namelist
mshroud	Material Identifier for Core Shroud	Combined with Water to Create a Homogenized Material	Namelist
mtg	Material Identifier for Core Top Guide	Combined with Water to Create a Homogenized Material	Namelist
mcp	Material Identifier for Core Plate	Combined with Water to Create a Homogenized Material	Namelist

[a]. The axial datum is the bottom of active fuel (BAF).

Table 2-1 (cont'd)

Mnemonic	Definition	Comments	Format
migt	Material Identifier for In-core Guide Tube		Namelist
valid	Array of Valid Assembly Locations	Integer – Values for Entire Core are Provided and then Partitioned for the Particular Problem	Space-delimited Field
bvalid	Array of Valid Control Blade Locations	Integer – Values are Provided for each Control Cell (or Implied Control Cell for Peripheral and non-fuel Locations)	Space-delimited Field
ivalid	Array of Locations for In-core Instrumentation Dry Tubes	Integer – Values are Provided for each Control Cell (or Implied Control Cell for Peripheral and non-fuel Locations)	Space-delimited Field

Figure 2-1 Location Indexing for Control Blades and Dry Tubes

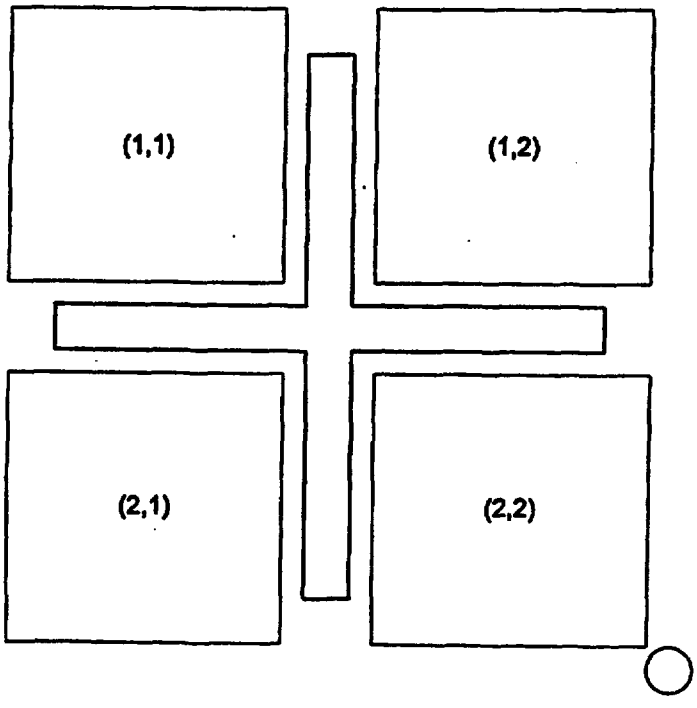

3. Dataset Creation

Each group of data in the dataset will now be discussed in greater detail and the creation of the dataset for a 724-bundle BWR/3 documented. The final dataset is shown in Figure 3-1.

3.1. Dataset Title Record

The first line of the dataset is a title. While the contents of this line are arbitrary, it should contain the following information to ensure consistency with the file name:

- number of bundles in the core (724 in this case); and
- the class of BWR (3 in this case).

3.2. Namelist Input

The FORTRAN namelist-type input variables must adhere to the restrictions inherent in the format of such input. Care must be taken to ensure that the value provided is consistent with the data storage class in the automation (i.e., integer input for integer variables and real input for real variables) so that precision is not lost for real variables and illusory precision is implied for integer variables.

The development of the values appropriate for the 724-bundle BWR/3 is shown in Worksheet 3-1. All of the material identifiers for the dataset are consistent with Type 304 stainless steel (Reference 4.1, for the first two cycles of operation of the Quad Cities-1 core, Table 12 and Figure 29 – hereafter cited as the "EPRI Report").

3.3. Space-delimited Fields

These fields are used for "maps" indicating the locations of fuel assemblies, control blades and in-core instrumentation dry tubes. While these are read in a "free-format," good practice indicates that they should be arrayed in a regular fashion that maximizes legibility.

3.4. Dataset Identification

This dataset file is named: bwr3_724bundle.dat

Figure 3-1 Core Geometry Dataset for 724 Bundle BWR/3

```
Core Geometry for 724-bundle BWR/3
$core
 ncol = 30
 nrow = 30
 apitch = 15.24
 vod = 668.654
 vthick = 15.557
 sod = 526.096
 sthick = 5.08
 tutpr = 399.0
 tcgr = 403.0
 bltpr = -13.49
 bcpr = -18.57
 mvessel = 'SS304'
 mshroud = 'SS304'
 mtg = '3TG1'
 mcp = '3CP1'
 migt = 'SS304'
 dtod = 1.78
 dtid = 1.63
$end
Valid Assembly Locations
 0 0 0 0 0 0 0 0 0 0 1 1 1 1 1 1 1 1 1 1 0 0 0 0 0 0 0 0 0 0
 0 0 0 0 0 0 0 0 0 1 1 1 1 1 1 1 1 1 1 1 1 0 0 0 0 0 0 0 0 0
 0 0 0 0 0 0 1 1 1 1 1 1 1 1 1 1 1 1 1 1 1 1 1 1 1 0 0 0 0 0
 0 0 0 0 0 1 1 1 1 1 1 1 1 1 1 1 1 1 1 1 1 1 1 1 1 1 0 0 0 0
 0 0 0 0 1 1 1 1 1 1 1 1 1 1 1 1 1 1 1 1 1 1 1 1 1 1 1 0 0 0
 0 0 0 1 1 1 1 1 1 1 1 1 1 1 1 1 1 1 1 1 1 1 1 1 1 1 1 1 0 0
 0 0 1 1 1 1 1 1 1 1 1 1 1 1 1 1 1 1 1 1 1 1 1 1 1 1 1 1 1 0
 0 0 1 1 1 1 1 1 1 1 1 1 1 1 1 1 1 1 1 1 1 1 1 1 1 1 1 1 0 0
 0 0 1 1 1 1 1 1 1 1 1 1 1 1 1 1 1 1 1 1 1 1 1 1 1 1 1 1 0 0
 0 1 1 1 1 1 1 1 1 1 1 1 1 1 1 1 1 1 1 1 1 1 1 1 1 1 1 1 1 0
 1 1 1 1 1 1 1 1 1 1 1 1 1 1 1 1 1 1 1 1 1 1 1 1 1 1 1 1 1 1
 1 1 1 1 1 1 1 1 1 1 1 1 1 1 1 1 1 1 1 1 1 1 1 1 1 1 1 1 1 1
 1 1 1 1 1 1 1 1 1 1 1 1 1 1 1 1 1 1 1 1 1 1 1 1 1 1 1 1 1 1
 1 1 1 1 1 1 1 1 1 1 1 1 1 1 1 1 1 1 1 1 1 1 1 1 1 1 1 1 1 1
 1 1 1 1 1 1 1 1 1 1 1 1 1 1 1 1 1 1 1 1 1 1 1 1 1 1 1 1 1 1
 1 1 1 1 1 1 1 1 1 1 1 1 1 1 1 1 1 1 1 1 1 1 1 1 1 1 1 1 1 1
 1 1 1 1 1 1 1 1 1 1 1 1 1 1 1 1 1 1 1 1 1 1 1 1 1 1 1 1 1 1
 1 1 1 1 1 1 1 1 1 1 1 1 1 1 1 1 1 1 1 1 1 1 1 1 1 1 1 1 1 1
 1 1 1 1 1 1 1 1 1 1 1 1 1 1 1 1 1 1 1 1 1 1 1 1 1 1 1 1 1 1
 1 1 1 1 1 1 1 1 1 1 1 1 1 1 1 1 1 1 1 1 1 1 1 1 1 1 1 1 1 1
 0 1 1 1 1 1 1 1 1 1 1 1 1 1 1 1 1 1 1 1 1 1 1 1 1 1 1 1 1 0
 0 0 1 1 1 1 1 1 1 1 1 1 1 1 1 1 1 1 1 1 1 1 1 1 1 1 1 1 0 0
 0 0 1 1 1 1 1 1 1 1 1 1 1 1 1 1 1 1 1 1 1 1 1 1 1 1 1 1 0 0
 0 0 1 1 1 1 1 1 1 1 1 1 1 1 1 1 1 1 1 1 1 1 1 1 1 1 1 1 0 0
 0 0 0 1 1 1 1 1 1 1 1 1 1 1 1 1 1 1 1 1 1 1 1 1 1 1 1 0 0 0
 0 0 0 0 1 1 1 1 1 1 1 1 1 1 1 1 1 1 1 1 1 1 1 1 1 1 0 0 0 0
 0 0 0 0 0 1 1 1 1 1 1 1 1 1 1 1 1 1 1 1 1 1 1 1 1 0 0 0 0 0
 0 0 0 0 0 0 1 1 1 1 1 1 1 1 1 1 1 1 1 1 1 1 1 1 0 0 0 0 0 0
 0 0 0 0 0 0 0 0 0 1 1 1 1 1 1 1 1 1 1 1 0 0 0 0 0 0 0 0 0 0
 0 0 0 0 0 0 0 0 0 0 1 1 1 1 1 1 1 1 1 1 0 0 0 0 0 0 0 0 0 0
```

Figure 3-1 (cont'd)

Valid Control Blade Locations

0	0	0	0	0	1	1	1	1	1	0	0	0	0	0
0	0	0	1	1	1	1	1	1	1	1	1	0	0	0
0	0	1	1	1	1	1	1	1	1	1	1	1	0	0
0	1	1	1	1	1	1	1	1	1	1	1	1	1	0
0	1	1	1	1	1	1	1	1	1	1	1	1	1	0
1	1	1	1	1	1	1	1	1	1	1	1	1	1	1
1	1	1	1	1	1	1	1	1	1	1	1	1	1	1
1	1	1	1	1	1	1	1	1	1	1	1	1	1	1
1	1	1	1	1	1	1	1	1	1	1	1	1	1	1
1	1	1	1	1	1	1	1	1	1	1	1	1	1	1
0	1	1	1	1	1	1	1	1	1	1	1	1	1	0
0	1	1	1	1	1	1	1	1	1	1	1	1	1	0
0	0	1	1	1	1	1	1	1	1	1	1	1	0	0
0	0	0	1	1	1	1	1	1	1	1	1	0	0	0
0	0	0	0	0	1	1	1	1	1	0	0	0	0	0

Incore Instrument Locations

0	0	0	0	0	1	0	1	0	1	0	0	0	0	0
0	0	0	1	0	0	0	0	0	0	0	1	0	0	0
0	1	0	1	0	1	0	1	0	1	0	1	0	0	0
0	0	0	1	0	0	0	0	0	1	0	0	0	0	0
0	1	0	1	0	1	0	1	0	1	0	1	0	1	0
0	0	0	0	0	1	0	1	0	0	0	0	0	0	0
0	1	0	1	0	1	0	1	0	1	0	1	0	1	0
0	0	0	0	0	1	0	1	0	0	0	0	0	0	0
0	1	0	1	0	1	0	1	0	1	0	1	0	1	0
0	0	0	1	0	0	0	0	0	1	0	0	0	0	0
0	1	0	1	0	1	0	1	0	1	0	1	0	1	0
0	0	0	1	0	0	0	0	0	0	0	0	0	0	0
0	0	0	1	0	1	0	1	0	1	0	1	0	0	0
0	0	0	0	0	0	0	0	0	0	0	0	0	0	0
0	0	0	0	0	0	0	0	0	0	0	0	0	0	0

Worksheet 3-1 Namelist Input Development

		Reference			
Mnemonic	Definition	Value	Units	Source	Name
ncol	Dimensionality of Core	30	n/a	[a]	n/a
nrow	Dimensionality of Core	30	n/a	[a]	n/a
apitch	Assembly Pitch	6	inches	[b]	APITCH
vod	Vessel Outer Diameter	668.654	cm	[c]	n/a
vthick	Vessel Thickness	15.557	cm	[c]	n/a
sod	Core Shroud Outer Diameter	526.096	cm	[c]	n/a
sthick	Core Shroud Thickness	5.08	cm	[c]	n/a
n/a	Assembly Length (Handle to Nosepiece)	171.27	inches	[d]	ATLEN
n/a	Nosepiece Guide	1.45	inches	[d]	LNPG
n/a	Nosepiece Cylinder	0.625	inches	[d]	LNPCYL
n/a	Lower Tie Plate	5.31	inches	[d]	LLTP
n/a	Active Fuel Length	144	inches	[d]	AFL
n/a	Handle Length	6.65	inches	[d]	LHANDLE
tutpr	Top of Upper Tie Plate Region	n/a	n/a	n/a	TUTPR
tcgr	Top of Core Grid Region	158.6875	inches	[e]	TCGR
bltpr	Bottom of Lower Tie Plate Region	n/a	n/a	n/a	n/a
n/a	Core Support Plate Thickness	2	inches	[e]	CSPTH
bcpr	Bottom of Fuel Support/Core Plate Region	n/a	n/a	n/a	n/a
dtod	Instrument Dry Tube Outer Diameter	0.700	inches	[f]	DTD
	Dry Tube Thickness	0.03	inches	[f]	DTD
dtid	Instrument Dry Tube Inner Diameter	1.63	inches	n/a	DTID

[a]. This value is from the EPRI Report, Table 15.
[b]. This value is from the EPRI Report, Table 3.
[c]. Reference 4.2, Table 4.1-1.
[d]. This value is from the EPRI Report, Figure 10.
[e]. This value is from the EPRI Report, Figure 26.
[f]. This value is from the EPRI Report, Figure 29.

Worksheet 3-1 (cont'd)

		Dataset		
Mnemonic	Definition	Value	Units	Computation
ncol	Dimensionality of Core	30	n/a	n/a
nrow	Dimensionality of Core	30	n/a	n/a
apitch	Assembly Pitch	15.24	cm	= 2.54*APITCH
vod	Vessel Outer Diameter	668.654	cm	n/a
vthick	Vessel Thickness	15.557	cm	n/a
sod	Core Shroud Outer Diameter	526.096	cm	n/a
sthick	Core Shroud Thickness	5.08	cm	n/a
n/a	Assembly Length (Handle to Nosepiece)	435.03	cm	= 2.54*ATLEN
n/a	Nosepiece Guide	3.68	cm	= 2.54*LNPG
n/a	Nosepiece Cylinder	1.59	cm	= 2.54*LNPCYL
n/a	Lower Tie Plate	13.49	cm	= 2.54*LLTP
n/a	Active Fuel Length	366	cm	= 2.54*AFL
n/a	Handle Length	16.89	cm	= 2.54*LHANDLE
tutpr	Top of Upper Tie Plate Region	399	cm	= 2.54*(AFL+ATLEN-LNPG-LNPCYL-LLTP-AFL-LHANDLE)
tcgr	Top of Core Grid Region	403.0663	cm	= 2.54*TCGR
bltpr	Bottom of Lower Tie Plate Region	-13.49	cm	= -2.54*LLTP
n/a	Core Support Plate Thickness	5.08	cm	= 2.54*CSPTH
bcpr	Bottom of Fuel Support/Core Plate Region	-18.57	cm	= -2.54*(LLTP+CSPTH)
dtod	Instrument Dry Tube Outer Diameter	1.78	cm	= 2.54*DTOD
	Dry Tube Thickness	0.076	cm	= 2.54*DTD
dtid	Instrument Dry Tube Inner Diameter	1.63	cm	= 2.54*(DTOD-2*DTD)

4. References

4.1 *Core Design and Operating Data for Cycles 1 and 2 of Quad Cities 1*, EPRI NP-240, Electric Power Research Institute, Palo Alto, California, November 1976. TIC #: 237267.

4.2 *MCNP CRC Reactivity Calculation for Quad Cities BWR*, DI#: BBA000000-01717-0200-00146 REV 00, CRWMS M&O. MOL.19971229.0128.

Table of Contents

Contents	Page
1. Introduction	5
2. Dataset Structure and Contents	5
3. Dataset Creation	7
3.1. Dataset Title Record	7
3.2. Space-separated-variable Fields	7
3.3. Dataset Location	22
4. References	43

List of Tables

Table	Contents	Page
Table 2-1	Contents of Dataset	6
Table 3-1	Isotopic Constants	8
Table 3-2	End-zone Component Specifications	11
Table 3-3	Moderator Weight Percentages	11
Table 3-4	Moderator Density Values	13
Table 3-5	Upper Tie Plate Region Composition	15
Table 3-6	Lower Tie Plate Composition	15
Table 3-7	Core Grid and Core Plate Compositions	16
Table 3-8	Spacer Grid Composition	20
Table 3-9	Material Dataset – Elemental Portion	22
Table 3-10	Material Dataset – Isotopic Portion	29

List of Figures

Figure	Contents	Page
Figure 3-1	Core Grid Geometry in Control Cell	12
Figure 3-2	Moderator Density Values	14
Figure 3-3	Dataset for Core Materials	36

List of Worksheets

Worksheet	Contents	Page
Worksheet 3-1	B_4C Composition Calculation	10
Worksheet 3-2	Materials Composition for End-zone Regions	16
Worksheet 3-3	Channel Cross-sectional Area Values	19
Worksheet 3-4	Computation of Spacer Composition and Effective Density	20

1. Introduction

This attachment describes the creation of the datasets defining the core materials dataset, including the fuel channel materials, fuel rod cladding and spacer grids. It provides a detailed list of contents for such datasets and documents the creation of the datasets of this type used in the present analysis. Such datasets are not necessarily specific to the analysis at hand and may not be referenced and used in subsequent analyses documented in other engineering calculations.

2. Dataset Structure and Contents

The dataset structure is an ASCII-format file that incorporates fields of space-separated-variable data. The contents of this dataset is given in Table 2-1.

Table 2-1 Contents of Dataset

Value	Description	Notes
Title	Descriptive Title of File Contents	
Material Mnemonic	Five Alphanumeric Character Identifier for Material	This is used as in the input directives to select materials from the dataset for use in the representation of a particular cell.
Density	Material Density in Units of g/cm^3	Density is used on the Cell Card.
Weight Percentage	Weight Percentage of a Given Element in the Composition	
Atomic Number		The atomic number is used to identify the element and construct the reference to the library.
Library (Elemental) [a]	Suffix for Library Entry	This is used to build the library entry identifier for a element.
Mass Number	Atomic Mass Number	This is used to identify the isotope and construct the reference to the library.
Natural Abundance	Frequency of Occurrence of this Isotope in Nature as an Atom Percentage	The natural abundance is used to modify the elemental weight percentage to properly reflect the amount of the nuclide present.
Library (Isotopic) [a]	Suffix for Library Entry	This is used to build the library entry identifier for an isotope.

[a]. A value of zero for this entry indicates that no values are available for this portion of the dataset.

3. Dataset Creation

Each group of data in the dataset will now be discussed in greater detail and the creation of the dataset documented. The final dataset is shown in Figure 3-3.

3.1. Dataset Title Record

The first line of the dataset is a title. While the contents of this line are arbitrary, it should contain the following information to ensure consistency with the file name:

3.2. Space-separated-variable Fields

These fields form the bulk of the information on the dataset. The values in the dataset is given in Tables 3-9 and 3-10. Note that the dataset has been loaded with the library suffixes given in the main body of this document.

Note that the data is grouped by element and isotopes within each element (see Figure 3-3). Thus the first line of a material definition contains, as its last value, a numeral corresponding to the total number of elements in the material. These elements then sequentially follow in the dataset. The elements may also be further sub-divided into data for each constituent isotope. Again, the last value on the record defining the element is a numeral that represents the subsequent number of records of isotopic information.

3.2.1. Homogeneous Compositions

For structures that are composed of a single material rather than a mixture of two distinct (e.g., stainless steel and light water), the basic isotopic constants from Table 3-1 are appropriately combined based on the previously determined compositions (Reference 4.1, hereafter cited as the "Materials Compilation"). For boron carbide, the computation of the weight percentages is given in Worksheet 3-1.

Table 3-1 'Isotopic Constants

Element	Atomic Number [a]	Library [b]	Mass Number [a]	Natural Abundance, Atom percent [a,c]	Library [b]	Atomic Weight g/g-atom [a]	Weight Percentage
Hydrogen	1	n/a	1	100.00	.50c	1.00782503	100.000
Boron	5	n/a	10	19.9	.50c	10.0129371	18.426
			11	80.1	.56c	11.0129371	81.574
Carbon	6	.50c	12	100.00	n/a	12.00000000	100.000
Nitrogen	7	n/a	14	100.00	.50c	14.00307401	100.000
Oxygen	8	n/a	16	100.00	.50c	15.9994	100.000
Magnesium	12	.50c	24	78.99	n/a	23.985042	77.950
			25	10.00	n/a	24.985837	10.280
			26	11.01	n/a	25.982594	11.770
Aluminum	13	n/a	27	100	.50c	26.981538	100.000
Silicon	14	.50c	28	92.23	n/a	27.976927	91.873
			29	4.67	n/a	28.976494	4.818
			30	3.1	n/a	29.973770	3.308
Phosphorus	15	n/a	31	100.0	.50c	30.973762	100.000
Sulfur	16	n/a	32	100.0	.50c	31.9720705	100.000
Titanium	22	.50c	46	8.0	n/a	45.952630	7.920
			47	7.3	n/a	46.951764	7.298
			48	73.8	n/a	47.947947	73.845
			49	5.5	n/a	48.947871	5.532
			50	5.4	n/a	49.944792	5.405
Chromium	24	n/a	50	4.345	.60c	49.946047	4.179
			52	83.79	.60c	51.940511	83.701
			53	9.50	.60c	52.940652	9.673
			54	2.365	.60c	53.938884	2.448
Manganese	25	n/a	55	100.00	.50c	54.938048	100.000
Iron	26	n/a	54	5.9	.60c	53.939613	5.650
			56	91.72	.60c	55.934940	91.898
			57	2.1	.60c	56.935398	2.161
			58	0.28	.60c	57.933278	0.290
Nickel	27	n/a	58	68.27	.60c	57.935348	67.201
			60	26.10	.60c	59.930788	26.773
			61	1.13	.60c	60.931058	1.183
			62	3.59	.60c	61.928346	3.630
			64	0.91	.60c	63.92796988	1.013
Copper	29	n/a	63	69.17	.60c	62.929699	68.499
			65	30.83	.60c	64.927792	31.501
Zirconium	40	.60c	90	51.45	n/a	89.904702	50.706
			91	11.22	n/a	90.905643	11.181
			92	17.15	n/a	91.905038	17.278
			94	17.38	n/a	93.906314	17.891
			96	2.80	n/a	95.908275	2.944
Molybdenum	42	.50c	92	14.84	n/a	91.90607	14.217
			94	9.25	n/a	93.905085	9.055
			95	15.92	n/a	94.905841	15.750
			96	16.68	n/a	95.904678	16.675

Element	Atomic Number [a]	Library [b]	Mass Number [a]	Natural Abundance, Atom percent [a,c]	Library [b]	Atomic Weight g/g-atom [a]	Weight Percentage
			97	9.55	n/a	96.906020	9.647
			98	24.13	n/a	97.905407	24.627
			100	9.63	n/a	99.90748	10.029
Tin	50	.35c	112	0.97	n/a	111.90482	0.914
			114	0.65	n/a	113.902761	0.624
			115	0.36	n/a	114.903347	0.329
			116	14.53	n/a	115.901745	14.196
			117	7.68	n/a	116.902953	7.563
			118	24.22	n/a	117.901606	24.055
			119	8.58	n/a	118.903309	8.604
			120	32.59	n/a	119.902197	32.917
			122	4.63	n/a	121.903440	4.765
			124	5.79	n/a	123.905274	6.043

[a]. These values are from the *Chart of the Nuclides* (Reference 4.2, hereafter cited as the "Chart of the Nuclides").
[b]. These values are from Reference 4.3, page 31.
[c]. In some cases the natural abundances have been changed due to the absence of libraries for some of the isotopes.

Worksheet 3-1 B_4C Composition Calculation

Symbol	Description	Value	Units	Reference/Computation
TDB4C	Theoretical Density of B_4C	2.44	g/cm³	Materials Compilation ¶4.1.22.2.
FTDB4C	Fraction of Theoretical Density	0.73	n/a	Materials Compilation¶4.1.22.2.
DB4C	B_4C Density	1.78	g/cm³	= TDB4C*FTDB4C
AAB10	Natural Abundence of B-10 in Boron	19.90	a/o	Chart of the Nuclides
AAB11	Natural Abundence of B-11 in Boron	80.10	a/o	Chart of the Nuclides
AWB10	Atomic Weight of B-10	10.0129372	g/gm atom	Chart of the Nuclides
AWB11	Atomic Weight of B-11	11.009306	g/gm atom	Chart of the Nuclides
AWB	Atomic Weight of Boron	10.811	g/gm atom	= (AAB10*AWB10+AAB11*AWB11)/100.0
WPB10	Weight Percentage of B-10 in Boron	18.431	w/o	= (AAB10*AWB10)/AWB
WPB11	Weight Percentage of B-11 in Boron	81.569	w/o	= (AAB11*AWB11)/AWB
AWC	Atomic Weight of Carbon	12.011	g/gm atom	Chart of the Nuclides
MWB4C	Molecular Weight of B_4C	55.2548	g/mol	= 4*AWB+AWC
WPBB4C	Weight Percentage of Boron in B_4C	78.2631	w/o	= 400*AWB/MWB4C
WPCB4C	Weight Percentage of Carbon in B_4C	21.7369	w/o	= 100*AWC/MWB4C

3.2.2. Non-homogenous Mixtures

While the majority of the components modeled in the MCNP model are homogenous in composition, some of them are homogenizations of homogeneous materials and moderator. These components are:

- upper tie plate, and empty fuel rod ends and channel portion adjacent to the upper tie plate;
- lower tie plate;
- top grid;
- fuel support piece and core plate; and
- fuel grid spacers.

The composition and effective density of these components and the associated moderator is dependent not only on their relative volume fractions, but also on the moderator density for the calculation.

3.2.2.1. Compositions for End-zone Region

The specifications for the regions both above and below the active core are given in Table 3-2. These values are from the EPRI report on values for methods benchmarking from the Quad Cities Unit 1 core (Reference 4.4 – hereafter cited as the "EPRI Report").

Table 3-2 End-zone Component Specifications

Component [a]	Material	Quantity	Weight (lb_m)	Mass (kg)
End Plugs	Zircaloy-2	98	3.565	1.6171
Lower Tie Plate	Type 304 Stainless Steel	1	9.614	4.3608
Upper Tie Plate	Type 304 Stainless Steel	1	4.514	2.0475
Hold-down Spring	Type 304 Stainless Steel	49	3.402	1.5431
Getter	Type 304 Stainless Steel	49	0.972	0.4409
Orificed Fuel Support [b]	Type 304 Stainless Steel	1	62	28.1227

[a]. These values are from the EPRI Report, Table 12, except as noted.
[b]. This value is from the EPRI Report, Figure 28.

For the moderator in all regions, the weight percentages for the isotopic constituents are as shown in Table 3-3 and the density depends on the pressure and temperature of the moderator for the particular CRC. The proper densities are computed from the tables for saturated liquid by linear interpolation as shown in Table 3-4 and illustrated in Figure 3-2. The computation of the volume of the core grid in a control cell is based on the scheme shown in Figure 3-1. The density in this table and figure were evaluated at 147°F which was the temperature of the Quad Cities Unit 1 initial core critical as documented in the EPRI Report, Figure 35, Page C-35.

Table 3-3 Moderator Weight Percentages

Element	Atomic Weight (g/g-atom) [a]	Atom Fractions	Atomic Mass (g/g-atom)	Weight Percentage
Hydrogen	1.0079	0.6667	0.6720	11.1898
Oxygen	15.9994	0.3333	5.3331	88.8102
		Total	6.0051	100.0000

[a]. These values are from the Chart of the Nuclides.

Figure 3-1 Core Grid Geometry in Control Cell

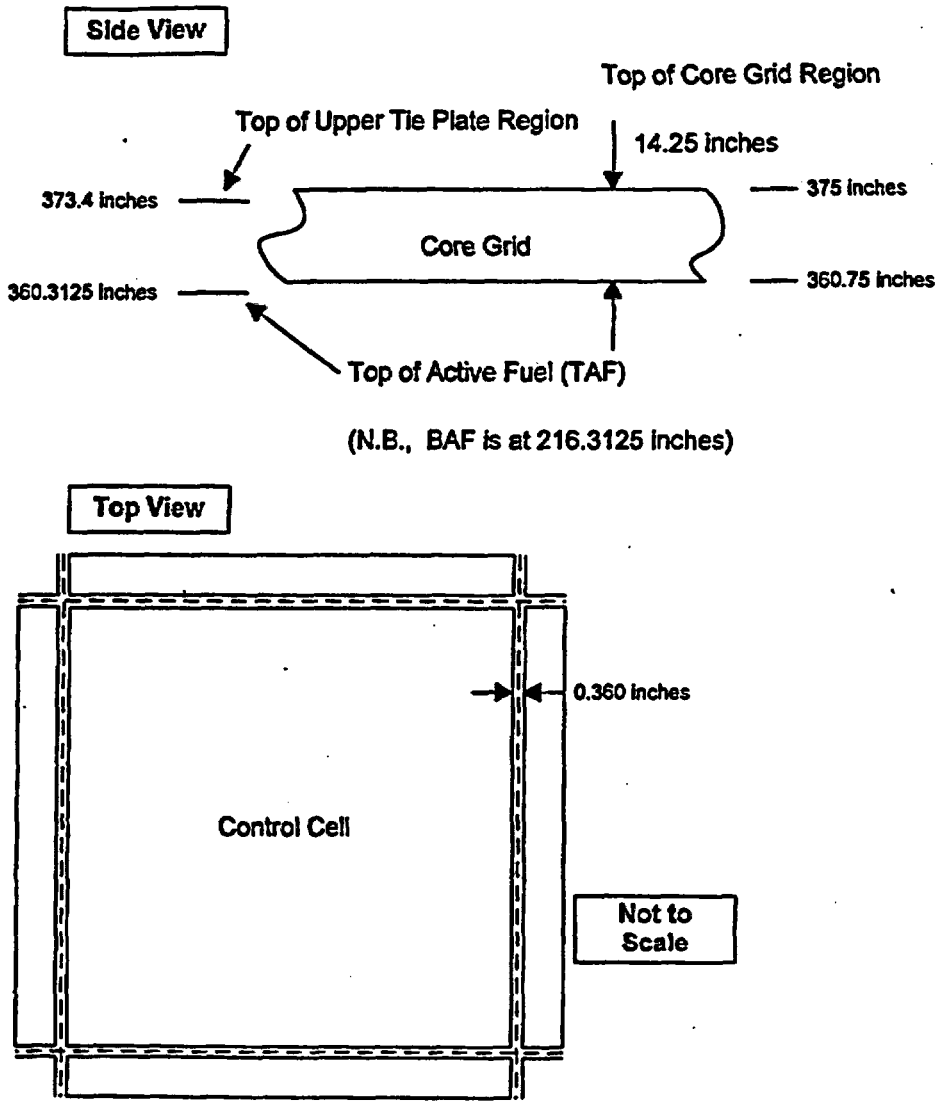

Table 3-4 Moderator Density Values

Temperature (K) [a]	Pressure (Mpa)	v_f (m^3/kg)	ρ_f (g/cm^3)
273.16	0.0006113	0.001000	1.000000
275	0.000698	0.001000	1.000000
280	0.0009912	0.001000	1.000000
285	0.001388	0.001001	0.999001
290	0.001919	0.001001	0.999001
295	0.00262	0.001002	0.998004
300	0.003536	0.001004	0.996016
305	0.004718	0.001005	0.995025
310	0.00623	0.001007	0.993049
315	0.008143	0.001009	0.991080
320	0.01054	0.001011	0.989120
325	0.01353	0.001013	0.987167
330	0.01721	0.001015	0.985222
335	0.02171	0.001018	0.982318
337.04	0.02394	0.00102	0.981141
340	0.02718	0.001021	0.979432
345	0.03377	0.001024	0.976563
350	0.04166	0.001027	0.973710

[a]. These values are from Reference 4.5,.

Figure 3-2 Moderator Density Values

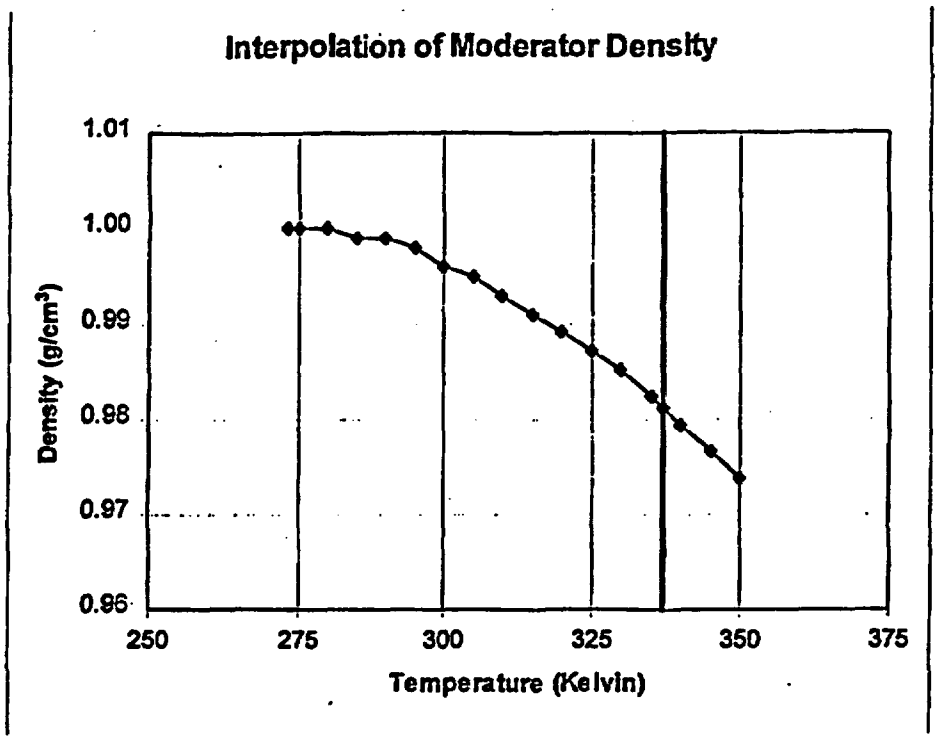

For the Quad Cities Unit 1 initial core CRC, the material weight percentages for the Upper Tie Plate Region are shown in Table 3-5. Those for the Lower Tie Plate Region are given in Table 3-6; those for the Core Grid Region and Core Plate Region (incorporating the Fuel Support Piece) are shown in Table 3-7. The computation of these material weight percentages is shown in Worksheet 3-2 as well as the determination of the effective densities for the non-homogenous mixtures. This computation assumes the computation of channel cross-sectional area values shown in Worksheet 3-3.

Table 3-5 Upper Tie Plate Region Composition

	Upper Tie Plate Region Mass Fractions				
	SS-304	Zircaloy-2	Zircaloy-4	Water	Total
	0.055	0.051	0.264	0.630	1.000
Hydrogen				7.053	7.053
Carbon	0.004				0.004
Nitrogen	0.006				0.006
Oxygen		0.006	0.032	55.977	56.015
Silicon	0.041				0.041
Phosphorus	0.002				0.002
Sulfur	0.002				0.002
Chromium	1.049	0.005	0.026		1.081
Manganese	0.110				0.110
Iron	3.797	0.005	0.053		3.855
Nickel	0.511	0.003			0.513
Zirconium		4.964	25.912		30.876
Tin		0.071	0.369		0.440
Total	5.524	5.054	26.392	63.030	100.000

Table 3-6 Lower Tie Plate Composition

	Lower Tie Plate Region Mass Fractions				
	SS-304	Zircaloy-2	Zircaloy-4	Water	Total
	0.550	0.102	0.079	0.270	1.000
Hydrogen				3.016	3.016
Carbon	0.044				0.044
Nitrogen	0.055				0.055
Oxygen		0.012	0.009	23.935	23.957
Silicon	0.412				0.412
Phosphorus	0.025				0.025
Sulfur	0.016				0.016
Chromium	10.445	0.010	0.008		10.463
Manganese	1.099				1.099
Iron	37.790	0.010	0.016		37.816
Nickel	5.085	0.005			5.090
Zirconium		10.012	7.742		17.754
Tin		0.143	0.110		0.253
Total	54.972	10.192	7.885	26.951	100.000

Table 3-7 Core Grid and Core Plate Compositions

	Core Grid Mass Fractions			Core Plate Mass Fractions		
	SS-304	Water	Total	SS-304	Water	Total
	0.069	0.931	1.000	0.701	0.299	1.000
Hydrogen		10.415	10.415		3.343	3.343
Carbon	0.006		0.0055	0.056		0.056
Nitrogen	0.007		0.0069	0.070		0.070
Oxygen		82.657	82.6571		26.533	26.533
Silicon	0.052		0.0520	0.526		0.526
Phosphorus	0.003		0.0031	0.032		0.032
Sulfur	0.002		0.0021	0.021		0.021
Chromium	1.316		1.3164	13.324		13.324
Manganese	0.139		0.1386	1.402		1.402
Iron	4.763		4.7629	48.207		48.207
Nickel	0.641		0.6409	6.486		6.486
Zirconium			0.0000			0.000
Tin			0.0000			0.000
	6.928	93.072	100.000	70.124	29.876	100.000

Worksheet 3-2 Materials Composition for End-zone Regions

Symbol	Parameter	Value	Units	Computation/Reference
CL	Cladding Length	156	inches	EPRI Report, Table 1. (396.24 cm)
AFL	Active Fuel Length	144	inches	EPRI Report, Figure 10 (365.76 cm).
N/A	Cladding Length Below Bottom of Active Fuel	~0	inches	EPRI Report, Figure 10.
CLATAF	Cladding Length Above Top of Active Fuel	30.480	cm	= (CL-AFL)*2.54
COD	Cladding Outer Diameter	0.563	inches	EPRI Report, Table 4. (1.43 cm)
CWTH	Cladding Wall Thickness	0.032	inches	EPRI Report, Table 4. (0.081 cm)
CID	Cladding Inner Diameter	1.267	cm	= (COD-2*CWTH)*2.54
ZIRC2D	Zircaloy-2 Density	6.560	g/cm^3	Table 3-1
ZIRC4D	Zircaloy-4 Density	6.560	g/cm^3	Table 3-1
SS304D	SS-304 Density	7.900	g/cm^3	Table 3-1
RHOM	Moderator Density for Quad Cities-1 Initial Core Critial Point	0.98114	g/cm^3	From Table 3-3
CMATAF	Cladding Mass Above Top of Active Fuel	3374.246	g	= 49*CLATAF*((PI()/4)*(((COD*2.54)^2)-(CID^2)))ZIRC2D
CVATAF	Cladding Volume Above Top of Active Fuel	514.367	cm^3	= CMATAF/ZIRC2D
EPTM	Endplug Mass (Zircaloy-2)	1617.057	g	
EPVBBAF	Endplug Volume Below Bottom of Active Fuel	123.251	cm^3	= (EPTM/2)/ZIRC2
EPVATAF	Endplug Volume Above Top of Active Fuel	123.251	cm^3	= (EPTM/2)/ZIRC2
LTPM	Lower Tie Plate Mass (SS-304)	4360.837	g	
LTPV	Lower Tie Plate Volume	552.005	cm^3	= LTPM/SS304D

Symbol	Parameter	Value	Units	Computation/Reference
UTPM	Upper Tie Plate Mass (SS-304)	2047.516	g	
UTPV	Upper Tie Plate Volume	259.179	cm^3	= UTPM/SS304D
MHDS	Mass of Hold-down Springs (SS-304)	1543.121	g	
HDSV	Volume of Hold-down Springs	195.332	cm^3	= MHDS/SS304D
MG	Mass of Getters (SS-304)	440.892	g	
VG	Volume of Getters	55.809	cm^3	= MG/SS304D
FVICATAF	Free Volume Inside Fuel Cladding Above Top of Active Fuel	1509.992	cm^3	= 49*((PI()/4)*(CID^2)*CLATAF)-EPVTAF-HDSV-VG
APITCH	Assembly Pitch	6.000	inches	EPRI Report, Table 3. (15.24 cm)
BCG	Bottom of Core Grid	144.4375	inches	EPRI Report, Figure 26 (zero axial location re-adjusted to be at the Bottom of Active Fuel). (366.87 cm)
CGATH	Core Grid Axial Thickness	14.250	inches	EPRI Report,Figure 26. (361.95 cm)
CGWTH	Core Grid Web Thickness	0.360	inches	EPRI Report, Figure 27. (0.914 cm)
ODOFS	Outer Diameter of Orificed Fuel Support at Core Plate	10.447	inches	EPRI Report, Figure 28. (26.535 cm)
CPTH	Core Plate Thickness	2.00	inches	EPRI Report, Figure 26. (5.08 cm)
HOFS	Height of Orificed Fuel Support	10.270	inches	EPRI Report, Figure 28. (26.09 cm)

Upper Tie Plate Region above Assembly

TUTPR	Top of Upper Tie Plate Region	399.000	cm	
CGVUTPR	Core Grid Volume in Upper Tie Plate Region	68.357	cm^3	= (CGWTH*APITCH-(CGWTH/2)^2)*(TUTPR-(BCG*2.54))
CGMUTPR	Core Grid Mass in Upper Tie Plate Region	540.021	g	= CGVUTPR*SS304D
CVUTPR	Channel Volume in Upper Tie Plate Region	3329.814	cm^3	= CCSA*(TUTPR-AFL)
CMUTPR	Channel Mass in Upper Tie Plate Region	21843.581	g	= CVUTPR*ZIRC4D
VUTPRAA	Volume of Upper Tie Plate Region above Assemblies	59225.688	cm^3	= ((APITCH*2.54)^2)*(TUTPR-AFL)
MVUTPRAA	Moderator Volume in Upper Tie Plate Region above Assemblies	53169.587	cm^3	= VUTPRAA-CVATAF-EPVATAF-UTPV-HDSV-VG-FVICATAF-CVUTPR-CGVUTPR
MMUTPRAA	Moderator Mass in Upper Tie Plate Region above Assemblies	52166.877	g	= MVUTPRAA*RHOM
MUTPRAA	Mass in Upper Tie Plate Region	82764.782	g	= CMATAF+(EPTM/2)+UTPM+MHDS+MG+MMUTPRAA+ CGMUTPR
MFC	Mass Fraction for Cladding	0.041	n/a	= CMATAF/MUTPRAA
MFUE	Mass Fraction for Upper Endplugs	0.010	n/a	= (EPTM/2)/MUTPRAA
MFUTP	Mass Fraction for Upper Tie Plate	0.025	n/a	= UTPM/MUTPRAA
MFHDS	Mass Fraction of Hold-down Springs	0.019	n/a	= MHDS/MUTPRAA
MFG	Mass Fraction for Getters	0.005	n/a	= MG/MUTPRAA
MFUTPRMAA	Mass Fraction for Upper Tie Plate Region Moderator above Assembly	0.630	n/a	= MMUTPRAA/MUTPRAA
MFCUTPR	Mass Fraction for Channel in Upper Tie Plate Region	0.264	n/a	= CMUTPR/MUTPRAA
MFCGUTPR	Mass Fraction for Core Grid in Upper Tie Plate Region	0.007	n/a	= CGMUTPR/MUTPRAA

Symbol	Parameter	Value	Units	Computation/Reference
EDUTPR	Effective Density in Upper Tie Plate Region	1.397	g/cm³	= MUTPRAA/ VUTPRAA
Lower Tie Plate Region below Assembly				
BLTPR	Bottom of Lower Tie Plate Region	-12.7	cm	
CLLTPR	Channel Length in Lower Tie Plate Region	7.303	cm	EPRI Report, Figure 10.
CVLTPR	Channel Volume in Lower Tie Plate Region	95.357	cm³	= CCSA*CLLTPR
CMLTPR	Channel Mass in Lower Tie Plate Region	625.540	g	= CVLTPR*ZIRC4D
VLTPRBA	Volume of Lower Tie Plate Region below Assembly	2949.672	cm³	= ((APITCH*2.54)^2)*(-BLTPR)
MVLTPRBA	Moderator Volume in Lower Tie Plate Region below Assembly	2179.059	cm³	= VLTPRBA-EPVBBAF-LTPV-CVLTPR
MMLTPRBA	Moderator Mass in Lower Tie Place Region below Assembly	2137.965	g	= MVLTPRBA*RHOM
MLTPRBA	Mass in Lower Tie Plate Region	7932.870	g	= (EPTM/2)+LTPM+MMLTPRBA+CMLTPR
MFLE	Mass Fraction in Lower End Plugs	0.102	n/a	= (EPTM/2)/MLTPRBA
MFLTP	Mass Fraction in Lower Tie Plate	0.550	n/a	= LTPM/MLTPRBA
MFLTPRMBA	Mass Fraction for Lower Tie Plate Region Moderator below Assembly	0.270	n/a	= MMLTPRBA/MLTPRBA
MFCLTPR	Mass Fraction for Chanel in Lower Tie Plate Region	0.079	n/a	= CMLTPR/MLTPRBA
EDLTPR	Effective Density in Lower Tie Plate Region	2.689	g/cm³	= MLTPRBA/VLTPRBA
Core Grid Region				
TCGR	Top of Core Grid Region	403.000	cm	
CGVCGR	Core Grid Volume in Core Grid Region	8.510	cm³	= (CGWTH*APITCH-(CGWTH/2)^2)*(TCGR-TUTPR)
CGMCGR	Core Grid Mass in Core Grid Region	67.232	g	= CGVCGR*SS304D
VCGRAA	Volume of Core Grid Region above Assembly	929.030	cm³	= ((APITCH*2.54)^2)*(TCGR-TUTPR)
MVCGRAA	Moderator Volume in Core Grid Region above Assembly	920.520	cm³	= VCGRAA-CGVCGR
MMCGRAA	Moderator Mass in Core Grid Region above Assembly	903.160	g	= MVCGRAA*RHOM
MCGR	Mass in Core Grid Region	970.392	g	= CGMCGR+MMCGRAA
MFCGCGR	Mass Fraction of Core Grid in Core Grid Region	0.069	n/a	= CGMCGR/MCGR
MFMCGR	Mass Fraction of Moderator in Core Grid Region	0.931	n/a	= MMCGRAA/MCGR
EDCGR	Effective Density of the Core Grid Region	1.045	g/cm³	= MCGR/MVCRGAA
Core Plate Region				
BCPR	Bottom of Core Plate Region	-38.79	cm	= BLTPR-(HOFS*2.54)
MOFS	Mass of Orificed Fuel Support	28122.73	g	

Symbol	Parameter	Value	Units	Computation/Reference
MOFSBA	Mass of Orificed Fuel Support below Assembly	7030.68	g	= MOFS/4
VOFS	Volume of Orificed Fuel Support	3559.84	cm^3	= MOFS/SS304D
VOFSBA	Volume of Orificed Fuel Support below Assembly	889.96	cm^3	= VOFS/4
CPVBA	Core Plate Volume below Assembly	477.53	cm^3	= (CPTH*2.54)*(APITCH*2.54)^2-(PI()/4)*(CPTH*2.54/4)*(ODOFS*2.54)^2
CPMBA	Core Plate Mass below Assembly	3772.52	g	= CPVBA*SS304D
VCPRBA	Volume of Core Plate Region below Assembly	6058.63	cm^3	= (BLTPR-BCPR)*(APITCH*2.54)^2
VMCPRBA	Volume of Water in Core Plate Region below Assembly	4691.13	cm^3	= VCPRBA-VOFSBA-CPVBA
MMCPRBA	Mass of Water in Core Plate Region below Assembly	4602.66	g	= VMCPRBA*RHOM
MCPRBA	Mass of Core Plate Region below Assembly	15405.86	g	= MOFSBA+CPMBA+MMCPRBA
MFOFSCPR	Mass Fraction of Orificed Fuel Support in Core Plate Region	0.456	n/a	= MOFSBA/MCPRBA
MFCPCPR	Mass Fraction of Core Plate in Core Plate Region	0.245	n/a	= CPMBA/MCPRBA
MFMCPR	Mass Fraction of Moderator in Core Plate Region	0.299	n/a	= MMCPRBA/MCPRBA
EDCPR	Effective Density of Core Plate Region	2.543	g/cm^3	= MCPRBA/VCPRBA

Worksheet 3-3 Channel Cross-sectional Area Values

Symbol	Parameter	Value	Units	Computation/Reference
COS	Outside Span of Channel	5.454	inches	EPRI Report, Figure 14 (Top of Channel Values).
CIS	Inside Span of Channel	5.258	inches	EPRI Report, Figure 14 (Top of Channel Values).
CICR	Channel Inside Corner Radius	0.4	inches	EPRI Report, Table 1.
CSSL	Length of Straight Side	11.3233	cm	= (CIS*2.54)-2*CICR*2.54
CTH	Channel Thickness	0.2489	cm	= ((COS-CIS)/2)*2.54
CSSA	Straight Side Area	2.8186	cm^2	= CTH*CSSL
COCR	Channel Outside Corner Radius	1.2649	cm	= (CICR*2.54)+CTH
CCA	Corner Area	0.4459	cm^2	= ((PI()/4)*(COCR^2-(CICR*2.54)^2)
CCSA	Channel Cross-sectional Area	13.0581	cm^2	= 4*(CSSA+CCA)

3.2.2.2. Compositions for Spacer Grids

The composition and effective density for the spacer grids in the Quad Cities Unit-1 core are shown in Table 3-8. The computation of these values is shown in Worksheet 3-4.

Table 3-8 Spacer Grid Composition

	Spacer Grid Node Weight Percentages			
	Inconel-X	Zircaloy-4	Water	Total
	0.027	0.141	0.832	1.000
Hydrogen			9.309	9.309
Carbon	0.001			0.001
Oxygen		0.017	73.884	73.901
Aluminum	0.024			0.024
Silicon	0.008			0.008
Titanium	0.067			0.067
Chromium	0.452	0.014		0.466
Manganese	0.013			0.013
Iron	0.242	0.028		0.271
Nickel	1.885			1.885
Zirconium		13.857		13.857
Tin		0.198		0.198
Total	2.693	14.113	83.193	100.000

Worksheet 3-4 Computation of Spacer Composition and Effective Density

Symbol	Description	Value	Units	Reference/Computation
NSPACER	Number of Spacers in Assembly	7	n/a	EPRI Report, Table 12.
TZ4WSG	Weight of Zircaloy-4 in Assembly Spacer Grids	3.757	lb_m	EPRI Report, Table 12. (1.704 kg)
TIWSG	Weight of Inconel in Assembly Spacer Grid Springs	0.717	lb_m	EPRI Report, Table 12. (0.325 kg)
Z4MSG	Zircaloy-4 Mass in Spacer Grid	243.5	g	= 1000*(TZ4WSG/NSPACER)/2.2046
IMSG	Inconel Mass in Spacer Grid	46.5	g	= 1000*(TIWSG/NSPACER)/2.2046
NNAF	Number of Nodes in Active Fuel	24	n/a	Assumption
NLEN	Node Length	15.2400	cm	= (AFL*2.54)/NNAF
VNIC	Volume of Node Inside Channel	2704.77	cm^3	= (CSSL^2+4*(CSSL*CICR*2.54)+ PI()*(CICR*2.54)^2)*NLEN
VNFR	Volume of Node Displaced by Fuel Rods	1199.38	cm^3	= NLEN*49*PI()*((COD/2)*2.54)^2
VNZSG	Volume of Node Displaced by Zircaloy in Spacer Grid	37.11	cm^3	= Z4MSG/ZIRC4D
IXD	Density of Inconel-X	8.22	g/cm^3	Reference 4.6, Page 441.
VNISG	Volume of Node Displaced by Inconel-X in Spacer Grid Springs	5.65	cm^3	= IMSG/IXD
VNW	Volume of Water in Node Inside Channel	1462.63	cm^3	= VNIC-VNFR-VNZSG-VNISG
RH2OD	Reference Density of Water	0.981141	g/cm^3	Valid for Quad Cities-1, Initial Core Critical Experiment
MNW	Nodal Mass of Water	1435.05	g	= VNW*RH2OD
NMFZ	Mass Fraction for Zircaloy-4	0.141	n/a	= Z4MSG/(Z4MSG+IMSG+MNW)
NMFI	Mass Fraction for Inconel-X	0.027	n/a	= IMSG/(Z4MSG+IMSG+MNW)

Symbol	Description	Value	Units	Reference/Computation
NMFW	Mass Fraction for Water	0.832	n/a	= MNW/(Z4MSG+IMSG+MNW)
NHD	Homogenized Density	1.179	g/cm³	= (MNW+Z4MSG+IMSG)/MNW
CS1E	Center of First Spacer above Bottom of Active Fuel	18.500	inches	EPRI Report, Table 12, Page A-8.
CS2E	Center of Second Spacer above Bottom of Active Fuel	38.000	inches	EPRI Report, Table 12, Page A-8.
CS3E	Center of Third Spacer above Bottom of Active Fuel	57.500	inches	EPRI Report, Table 12, Page A-8.
CS4E	Center of Fourth Spacer above Bottom of Active Fuel	77.000	inches	EPRI Report, Table 12, Page A-8.
CS5E	Center of Fifth Spacer above Bottom of Active Fuel	96.500	inches	EPRI Report, Table 12, Page A-8.
CS6E	Center of Sixth Spacer above Bottom of Active Fuel	116.000	inches	EPRI Report, Table 12, Page A-8.
CS7E	Center of Seventh Spacer above Bottom of Active Fuel	135.500	inches	EPRI Report, Table 12, Page A-8.
CS1M	Center of First Spacer above Bottom of Active Fuel	46.990	cm	= CS1E*2.54
CS2M	Center of Second Spacer above Bottom of Active Fuel	96.520	cm	= CS2E*2.54
CS3M	Center of Third Spacer above Bottom of Active Fuel	146.050	cm	= CS3E*2.54
CS4M	Center of Fourth Spacer above Bottom of Active Fuel	195.580	cm	= CS4E*2.54
CS5M	Center of Fifth Spacer above Bottom of Active Fuel	245.110	cm	= CS5E*2.54
CS6M	Center of Sixth Spacer above Bottom of Active Fuel	294.640	cm	= CS6E*2.54
CS7M	Center of Seventh Spacer above Bottom of Active Fuel	344.170	cm	= CS7E*2.54

3.3. Dataset Location

This dataset file has the following name:

- core_materials.dat

The contents of the individual fields in the dataset are shown in Tables 3-9 and 3-10, while a copy of the dataset itself is provided in Figure 3-3.

Table 3-9 Material Dataset – Elemental Portion

	Constituents				Elemental	
Material	Mnemonic	Density (g/cm^3)	Element	Weight Percentage	Atomic Number	Library
Type 304 Stainless Steel	SS304	7.900	Carbon	0.080	6	.50c
			Manganese	2.000	25	n/a
			Phosphorus	0.045	15	n/a
			Sulfur	0.030	16	n/a
			Silicon	0.750	14	.50c
			Chromium	19.00	24	n/a
			Nickel	9.250	27	n/a
			Nitrogen	0.100	7	n/a
			Iron	68.745	26	n/a
Zircaloy-2	ZIRC2	6.56	Oxygen	0.12	8	n/a
			Chromium	0.10	24	n/a
			Iron	0.10	26	n/a
			Nickel	0.05	27	n/a

	Constituents				Elemental	
Material	Mnemonic	Density (g/cm^3)	Element	Weight Percentage	Atomic Number	Library
			Tin	1.40	50	.35c
			Zirconium	98.23	40	.60c
Zircaloy-4	ZIRC4	6.56	Oxygen	0.12	8	n/a
			Chromium	0.10	24	n/a
			Iron	0.20	26	n/a
			Tin	1.40	50	.35c
			Zirconium	98.18	40	.60c
Boron Carbide	B4C	1.76	Boron	78.26	5	n/a
			Carbon	21.74	6	.50c
Inconel-X	INCX	8.22	Iron	9.00	26	.55c

	Constituents				Elemental	
Material	Mnemonic	Density (g/cm³)	Element	Weight Percentage	Atomic Number	Library
			Nickel	70.00	27	n/a
			Chromium	16.77	24	n/a
			Titanium	2.50	22	.50c
			Manganese	0.50	25	n/a
			Carbon	0.03	6	.50c
			Silicon	0.30	14	.50c
			Aluminum	0.90	13	n/a
Upper Tie Plate Region	G7UTP1	1.397	Hydrogen	7.05	1	n/a
			Carbon	0.004	6	.50c
			Nitrogen	0.006	7	n/a
			Oxygen	56.015	8	n/a
			Silicon	0.04	14	.50c
			Phosphorus	0.002	15	n/a
			Sulfur	0.002	16	n/a
			Chromium	1.081	24	n/a
			Manganese	0.11	25	n/a
			Iron	3.85	25	n/a
			Nickel	0.51	27	n/a

	Constituents				Elemental	
Material	Mnemonic	Density (g/cm³)	Element	Weight Percentage	Atomic Number	Library
			Zirconium	30.88	40	.60c
			Tin	0.44	50	.35c
Lower Tie Plate Region	G7LTP1	1.397	Hydrogen	3.02	1	n/a
			Carbon	0.044	6	.50c
			Nitrogen	0.055	7	n/a
			Oxygen	23.957	8	n/a
			Silicon	0.41	14	.50c
			Phosphorus	0.025	15	n/a
			Sulfur	0.016	16	n/a
			Chromium	10.463	24	n/a
			Manganese	1.10	25	n/a
			Iron	37.82	25	n/a
			Nickel	5.09	27	n/a
			Zirconium	17.75	40	.60c

	Constituents				Elemental	
Material	Mnemonic	Density (g/cm³)	Element	Weight Percentage	Atomic Number	Library
			Tin	0.25	50	.35c
BWR/3 Core Grid	3TG1	1.045	Hydrogen	10.41	1	n/a
			Carbon	0.006	6	.50c
			Nitrogen	0.007	7	n/a
			Oxygen	82.657	8	n/a
			Silicon	0.052	14	.50c
			Phosphorus	0.003	15	n/a
			Sulfur	0.002	16	n/a
			Chromium	1.316	24	n/a
			Manganese	0.14	25	n/a
			Iron	4.76	26	n/a
			Nickel	0.64	27	n/a
BWR/3 Fuel Support/ Core Plate	3CP1	1.045	Hydrogen	3.34	1	n/a
			Carbon	0.056	6	.50c
			Nitrogen	0.070	7	n/a
			Oxygen	26.533	8	n/a
			Silicon	0.526	14	.50c
			Phosphorus	0.032	15	n/a
			Sulfur	0.021	16	n/a

	Constituents				Elemental	
Material	Mnemonic	Density (g/cm³)	Element	Weight Percentage	Atomic Number	Library
			Chromium	13.324	24	n/a
			Manganese	1.40	25	n/a
			Iron	48.21	26	n/a
			Nickel	6.49	27	n/a
GE 7x7 Spacer Grid D-Lattice	SG7D1	1.179	Hydrogen	9.309	1	n/a
			Carbon	0.001	6	.50c
			Oxygen	73.901	8	n/a
			Aluminum	0.024	13	n/a
			Silicon	0.008	14	.50c
			Titanium	0.067	22	.50c
			Chromium	0.466	24	n/a
			Manganese	0.013	25	n/a
			Iron	0.271	26	n/a
			Nickel	1.885	27	n/a
			Zirconium	13.857	40	.60c

	Constituents				Elemental	
Material	Mnemonic	Density (g/cm^3)	Element	Weight Percentage	Atomic Number	Library
			Tin	0.198	50	.35c

Table 3-10 Material Dataset – Isotopic Portion

Material	Element	Isotopic		
		Mass Number	Isotopic Weight Percentage	Library
Type 304 Stainless Steel	Carbon	12	100	n/a
	Manganese	55	100	.50c
	Phosphorus	31	100	.50c
	Sulfur	32	100	.50c
	Silicon	28	91.873	n/a
		29	4.818	n/a
		30	3.308	n/a
	Chromium	50	4.179	.60c
		52	83.701	.60c
		53	9.673	.60c
		54	2.448	.60c
	Nickel	58	67.201	.60c
		60	26.773	.60c
		61	1.183	.60c
		62	3.830	.60c
		64	1.013	.60c
	Nitrogen	14	100.000	.50c
	Iron	54	5.650	.60c
		56	91.898	.60c
		57	2.161	.60c
		58	0.290	.60c
Zircaloy-2	Oxygen	16	100.000	.50c
	Chromium	50	4.179	.60c
		52	83.701	.60c
		53	9.673	.60c
		54	2.448	.60c
	Iron	54	5.650	.60c
		56	91.898	.60c
		57	2.161	.60c
		58	0.290	.60c
	Nickel	58	67.201	.60c
		60	26.773	.60c
		61	1.183	.60c
		62	3.830	.60c
		64	1.013	.60c
	Tin	112	0.914	n/a
		114	0.624	n/a
		115	0.329	n/a
		116	14.196	n/a
		117	7.563	n/a
		118	24.055	n/a

Material	Element	Isotopic Mass Number	Isotopic Weight Percentage	Library
		119	8.604	n/a
		120	32.917	n/a
		122	4.755	n/a
		124	6.043	n/a
	Zirconium	90	50.706	n/a
		91	11.181	n/a
		92	17.278	n/a
		94	17.891	n/a
		96	2.944	n/a
Zircaloy-4	Oxygen	16	100.000	.50c
	Chromium	50	4.179	.60c
		52	83.701	.60c
		53	9.673	.60c
		54	2.448	.60c
	Iron	54	5.650	.60c
		56	91.898	.60c
		57	2.161	.60c
		58	0.290	.60c
	Tin	112	0.914	n/a
		114	0.624	n/a
		115	0.329	n/a
		116	14.196	n/a
		117	7.563	n/a
		118	24.055	n/a
		119	8.604	n/a
		120	32.917	n/a
		122	4.755	n/a
		124	6.043	n/a
	Zirconium	90	50.706	n/a
		91	11.181	n/a
		92	17.278	n/a
		94	17.891	n/a
		96	2.944	n/a
Boron Carbide	Boron	10	18.426	.50c
		11	81.574	.56c
	Carbon	55	100.000	.50c
Inconel-X	Iron	54	5.650	.60c
		56	91.898	.60c
		57	2.161	.60c
		58	0.290	.60c
	Nickel	58	67.201	.60c
		60	26.773	.60c
		61	1.183	.60c

Material	Element	Isotopic		
		Mass Number	Isotopic Weight Percentage	Library
		62	3.830	.60c
		64	1.013	.60c
	Chromium	50	4.179	.60c
		52	83.701	.60c
		53	9.673	.60c
		54	2.448	.60c
	Titanium	46	7.920	n/a
		47	7.298	n/a
		48	73.845	n/a
		49	5.532	n/a
		50	5.405	n/a
	Manganese	55	100.000	.50c
	Carbon	12	100.000	n/a.
	Silicon	28	91.873	n/a
		29	4.818	n/a
		30	3.308	n/a
	Aluminum	27	100.000	.50c
Upper Tie Plate Region	Hydrogen	1	100.000	.50c
	Carbon	12	100.000	n/a
	Nitrogen	14	100.000	.50c
	Oxygen	16	100.000	.50c
	Silicon	28	91.873	n/a
		29	4.818	n/a
		30	3.308	n/a
	Phosphorus	31	100.000	.50c
	Sulfur	32	100.000	.50c
	Chromium	50	4.179	.60c
		52	83.701	.60c
		53	9.673	.60c
		54	2.448	.60c
	Manganese	55	5.405	n/a
	Iron	55	100.000	.50c
		54	5.650	.60c
		56	91.898	.60c
		57	2.161	.60c
		58	0.290	.60c
	Nickel	58	67.201	.60c
		60	26.773	.60c
		61	1.183	.60c
		62	3.830	.60c
		64	1.013	.60c
	Zirconium	90	50.706	n/a
		91	11.181	n/a

Material	Element	Isotopic Mass Number	Isotopic Isotopic Weight Percentage	Isotopic Library
		92	17.278	n/a
		94	17.891	n/a
		96	2.944	n/a
	Tin	112	0.914	n/a
		114	0.624	n/a
		115	0.329	n/a
		116	14.196	n/a
		117	7.563	n/a
		118	24.055	n/a
		119	8.604	n/a
		120	32.917	n/a
		122	4.755	n/a
		124	6.043	n/a
Lower Tie Plate Region	Hydrogen	1	100.000	.50c
	Carbon	12	100.000	n/a
	Nitrogen	14	100.000	.50c
	Oxygen	16	100.000	.50c
	Silicon	28	91.873	n/a
		29	4.818	n/a
		30	3.308	n/a
	Phosphorus	31	100.000	.50c
	Sulfur	32	100.000	.50c
	Chromium	50	4.179	.60c
		52	83.701	.60c
		53	9.673	.60c
		54	2.448	.60c
	Manganese	55	100.000	.50c
	Iron	55	100.000	.50c
		54	5.650	.60c
		56	91.898	.60c
		57	2.161	.60c
		58	0.290	.60c
	Nickel	58	67.201	.60c
		60	26.773	.60c
		61	1.183	.60c
		62	3.830	.60c
		64	1.013	.60c
	Zirconium	90	50.706	n/a
		91	11.181	n/a
		92	17.278	n/a
		94	17.891	n/a
		96	2.944	n/a
	Tin	112	0.914	n/a

Material	Element	Isotopic		
		Mass Number	Isotopic Weight Percentage	Library
		114	0.624	n/a
		115	0.329	n/a
		116	14.196	n/a
		117	7.563	n/a
		118	24.055	n/a
		119	8.604	n/a
		120	32.917	n/a
		122	4.755	n/a
		124	6.043	n/a
BWR/3 Core Grid	Hydrogen	1	100.000	.50c
	Carbon	12	100.000	n/a
	Nitrogen	14	100.000	.50c
	Oxygen	16	100.000	.50c
	Silicon	28	91.873	n/a
		29	4.818	n/a
		30	3.308	n/a
	Phosphorus	31	100.000	.50c
	Sulfur	32	100.000	.50c
	Chromium	50	4.179	.60c
		52	83.701	.60c
		53	9.673	.60c
		54	2.448	.60c
	Manganese	55	100.000	.50c
	Iron	54	5.650	.60c
		56	91.898	.60c
		57	2.161	.60c
		58	0.290	.60c
		58	67.201	.60c
	Nickel	58	67.201	.60c
		60	26.773	.60c
		61	1.183	.60c
		62	3.830	.60c
		64	1.013	.60c
BWR/3 Fuel Support/ Core Plate	Hydrogen	1	100.000	.50c
	Carbon	12	100.000	n/a
	Nitrogen	14	100.000	.50c
	Oxygen	16	100.000	.50c
	Silicon	28	91.873	.60c
		29	4.818	.60c
		30	3.308	n/a
	Phosphorus	31	100.000	.50c
	Sulfur	32	100.000	.50c
	Chromium	50	4.179	.60c

Material	Element	Isotopic Mass Number	Isotopic Weight Percentage	Library
		52	83.701	.60c
		53	9.673	.60c
		54	2.448	.60c
	Manganese	55	100.000	.50c
	Iron	54	5.650	.60c
		56	91.898	.60c
		57	2.161	.60c
		58	0.290	.60c
		58	67.201	.60c
	Nickel	58	67.201	.60c
		60	26.773	.60c
		61	1.183	.60c
		62	3.830	.60c
		64	1.013	.60c
GE 7x7 Spacer Grid D-Lattice	Hydrogen	1	100.000	.50c
	Carbon	12	100.000	n/a
	Oxygen	16	100.000	.50c
	Aluminum	27	100.000	.50c
	Silicon	28	91.873	n/a
	Titanium	46	7.920	n/a
		47	7.298	n/a
		48	73.845	n/a
		49	5.532	n/a
		50	5.405	n/a
	Chromium	50	4.179	.60c
		52	83.701	.60c
		53	9.673	.60c
		54	2.448	.60c
		55	100.000	.50c
	Manganese	55	100.000	.50c
	Iron	54	5.650	.60c
		56	91.898	.60c
		57	2.161	.60c
		58	0.290	.60c
	Nickel	58	67.201	.60c
		60	26.773	.60c
		61	1.183	.60c
		62	3.830	.60c
		64	1.013	.60c
	Zirconium	90	50.706	n/a
		91	11.181	n/a
		92	17.278	n/a
		94	17.891	n/a

Material	Element	Isotopic		
		Mass Number	Isotopic Weight Percentage	Library
		96	2.944	n/a
	Tin	112	0.914	n/a
		114	0.624	n/a
		115	0.329	n/a
		116	14.196	n/a
		117	7.563	n/a
		118	24.055	n/a
		119	8.604	n/a
		120	32.917	n/a
		122	4.755	n/a
		124	6.043	n/a

Figure 3-3 Dataset for Core Materials

```
Core Materials for BWR
Type 304 Stainless Steel
SS304 7.900 9
Carbon 0.080 6 .50c 1
12 100.0 0
Manganese 2.000 25 0 1
55 100 .50c
Phosphorus 0.045 15 0 1
31 100 .50c
Sulfur 0.030 16 0 1
32 100.0 .50c
Silicon 0.750 14 .50c 3
28 91.873 0
29 4.818 0
30 3.308 0
Chromium 19.00 24 0 4
50 4.179 .60c
52 83.701 .60c
53 9.673 .60c
54 2.448 .60c
Nickel 9.250 28 0 5
58 67.201 .60c
60 26.773 .60c
61 1.183 .60c
62 3.83 .60c
64 1.013 .60c
Nitrogen 0.100 7 0 1
14 100.0 .50c
Iron 68.745 26 0 4
54 5.65 .60c
56 91.898 .60c
57 2.161 .60c
58 0.290 .60c
Zircaloy 2
ZIRC2 6.56 6
Oxygen 0.12 8 0 1
16 100 .50c
Chromium 0.10 24 0 4
50 4.179 .60c
52 83.701 .60c
53 9.673 .60c
54 2.448 .60c
Iron 0.10 26 0 4
54 5.650 .60c
56 91.898 .60c
57 2.161 .60c
58 0.290 .60c
Nickel 0.05 28 0 5
58 67.201 .60c
60 26.773 .60c
61 1.183 .60c
62 3.83 .60c
64 1.013 .60c
```

Figure 3-3 (cont'd)

```
Tin 1.40 50 .35c 10
112 0.914 0
114 0.624 0
115 0.329 0
116 14.196 0
117 7.563 0
118 24.055 0
119 8.604 0
120 32.917 0
122 4.755 0
124 6.043 0
Zirconium 98.23 40 .60c 5
90 50.706 0
91 11.181 0
92 17.278 0
94 17.891 0
96 2.944 0
Zircaloy 4
ZIRC4 6.56 5
Oxygen 0.12 8 0 1
16 100 .50c
Chromium 0.10 24 0 4
50 4.179 .60c
52 83.701 .60c
53 9.673 .60c
54 2.448 .60c
Iron 0.20 26 0 4
54 5.650 .60c
56 91.898 .60c
57 2.161 .60c
58 0.290 .60c
Tin 1.40 50 .35c 10
112 0.914 0
114 0.624 0
115 0.329 0
116 14.196 0
117 7.563 0
118 24.055 0
119 8.604 0
120 32.917 0
122 4.755 0
124 6.043 0
Zirconium 98.18 40 .60c 5
90 50.706 0
91 11.181 0
92 17.278 0
94 17.891 0
96 2.944 0
Boron Carbide
B4C 1.76 2
Boron 78.26 5 0 2
10 18.426 .50c
11 81.574 .56c
```

Figure 3-3 (cont'd)

```
Carbon 20.0 6 .50c 1
12 100.0 0
Spacer GE 7x7 D Lattice (0.981141 Water Density)
SG7D1 1.179 12
Hydrogen 9.309 1 0 1
1 100 .50c
Carbon 0.001 6 .50c 1
12 100 0
Oxygen 73.901 8 0 1
16 100 .50c
Aluminum 0.024 13 0 1
27 100 .50c
Silicon 0.008 14 .50c 3
28 91.873 0
29 4.818 0
30 3.308 0
Titanium 0.067 22 .50c 5
46 7.920 0
47 7.298 0
48 73.845 0
49 5.532 0
50 5.405 0
Chromium 0.466 24 0 4
50 4.179 .60c
52 83.701 .60c
53 9.673 .60c
54 2.448 .60c
Manganese 0.013 25 0 1
55 100 .50c
Iron 0.271 26 0 4
54 5.650 .60c
56 91.898 .60c
57 2.161 .60c
58 0.290 .60c
Nickel 1.885 28 0 5
58 67.201 .60c
60 26.773 .60c
61 1.183 .60c
62 3.83 .60c
64 1.013 .60c
Zirconium 13.857 40 .60c 5
90 50.706 0
91 11.181 0
92 17.278 0
94 17.891 0
96 2.944 0
Tin 0.198 50 .35c 10
112 0.914 0
114 0.624 0
115 0.329 0
116 14.196 0
117 7.563 0
118 24.055 0
119 8.604 0
120 32.917 0
122 4.755 0
```

Figure 3-3 (cont'd)

```
124 6.043 0
Upper Tie Plate Region GE-7x7 Fuel, BWR/3 (0.981141 Water Density)
7GUTP1 1.397 13
Hydrogen 7.053 1 0 1
1 100 .50c
Carbon 0.004 6 .50c 1
12 100 0
Nitrogen 0.006 7 0 1
14 100 .50c
Oxygen 56.015 8 0 1
16 100 .50c
Silicon 0.041 14 .50c 3
28 91.873 0
29 4.818 0
30 3.308 0
Phosphorus 0.002 15 0 1
31 100 .50c
Sulfur 0.002 16 0 1
32 100.0 .50c
Chromium 1.081 24 0 4
50 4.179 .60c
52 83.701 .60c
53 9.673 .60c
54 2.448 .60c
Manganese 0.110 25 0 1
55 100 .50c
Iron 3.855 26 0 4
54 5.650 .60c
56 91.898 .60c
57 2.161 .60c
58 0.290 .60c
Nickel 0.513 28 0 5
58 67.201 .60c
60 26.773 .60c
61 1.183 .60c
62 3.83 .60c
64 1.013 .60c
Zirconium 30.876 40 .60c 5
90 50.706 0
91 11.181 0
92 17.278 0
94 17.891 0
96 2.944 0
Tin 0.440 50 .35c 10
112 0.914 0
114 0.624 0
115 0.329 0
116 14.196 0
117 7.563 0
118 24.055 0
119 8.604 0
120 32.917 0
122 4.755 0
124 6.043 0
Lower Tie Plate Region GE-7x7 Fuel, BWR/3 (0.981141 Water Density)
7GLTP1 1.397 13
```

Figure 3-3 (cont'd)

```
Hydrogen 3.016 1 0 1
1 100 .50c
Carbon 0.044 6 .50c 1
12 100 .0
Nitrogen 0.055 7 0 1
14 100 .50c
Oxygen 23.957 8 0 1
16 100 .50c
Silicon 0.412 14 .50c 3
28 91.873 0
29 4.818 0
30 3.308 0
Phosphorus 0.025 15 0 1
31 100 .50c
Sulfur 0.016 16 0 1
32 100.0 .50c
Chromium 10.463 24 0 4
50 4.179 .60c
52 83.701 .60c
53 9.673 .60c
54 2.448 .60c
Manganese 1.099 25 0 1
55 100 .50c
Iron 37.816 26 0 4
54 5.650 .60c
56 91.898 .60c
57 2.161 .60c
58 0.290 .60c
Nickel 5.090 28 0 5
58 67.201 .60c
60 26.773 .60c
61 1.183 .60c
62 3.83 .60c
64 1.013 .60c
Zirconium 17.754 40 .60c 5
90 50.706 0
91 11.181 0
92 17.278 0
94 17.891 0
96 2.944 0
Tin 0.253 50 .35c 10
112 0.914 0
114 0.624 0
115 0.329 0
116 14.196 0
117 7.563 0
118 24.055 0
119 8.604 0
120 32.917 0
122 4.755 0
124 6.043 0
Core Grid, BWR/3 (0.981141 Water Density)
3TG1 1.045 11
Hydrogen 10.415 1 0 1
1 100 .50c
Carbon 0.006 6 .50c 1
```

Figure 3-3 (cont'd)

```
12 100 0
Nitrogen 0.007 7 0 1
14 100 .50c
Oxygen 82.657 8 0 1
16 100 .50c
Silicon 0.052 14 .50c 3
28 91.873 0
29 4.818 0
30 3.308 0
Phosphorus 0.003 15 0 1
31 100 .50c
Sulfur 0.002 16 0 1
32 100.0 .50c
Chromium 1.316 24 0 4
50 4.179 .60c
52 83.701 .60c
53 9.673 .60c
54 2.448 .60c
Manganese 0.139 25 0 1
55 100 .50c
Iron 4.763 26 0 4
54 5.650 .60c
56 91.898 .60c
57 2.161 .60c
58 0.290 .60c
Nickel 0.641 28 0 5
58 67.201 .60c
60 26.773 .60c
61 1.183 .60c
62 3.83 .60c
64 1.013 .60c
Core Plate, BWR/3 (0.981141 Water Density)
3CP1 2.543 11
Hydrogen 3.343 1 0 1
1 100 .50c
Carbon 0.056 6 .50c 1
12 100 0
Nitrogen 0.070 7 0 1
14 100 .50c
Oxygen 26.533 8 0 1
16 100 .50c
Silicon 0.526 14 .50c 3
28 91.873 0
29 4.818 0
30 3.308 0
Phosphorus 0.032 15 0 1
31 100 .50c
Sulfur 0.021 16 0 1
32 100.0 .50c
Chromium 13.324 24 0 4
50 4.179 .60c
52 83.701 .60c
53 9.673 .60c
54 2.448 .60c
Manganese 1.402 25 0 1
55 100 .50c
```

Figure 3-3 (cont'd)

```
Iron 48.207 26 0 4
54 5.650 .60c
56 91.898 .60c
57 2.161 .60c
58 0.290 .60c
Nickel 6.486 28 0 5
58 67.201 .60c
60 26.773 .60c
61 1.183 .60c
62 3.83 .60c
64 1.013 .60c
```

4. References

4.1 *Material Compositions and Number Densities for Neutronics Calculations (SCPB: N/A)*, DI#: BBA000000-01717-0200-00002 REV 00, CRWMS M&O. MOL.19960624.0023.

4.2 *Nuclides and Isotopes (Incorporating the Chart of the Nuclides)*, 14th Edition, General Electric Company, San Jose, CA, 1989. TIC #: 201637.

4.3 *CRC Statepoint Reactivity Calculations for Cycles 1A, 1B, 2, 3, and 4 of Crystal River Unit 3*, DI#: BBA000000-01717-0200-00046 REV 00, CRWMS M&O. MOL.19971218.1060.

4.4 *Core Design and Operating Data for Cycles 1 and 2 of Quad Cities 1*, EPRI NP-240, Electric Power Research Institute, Palo Alto, CA, November 1976. TIC #: 237267.

4.5 Keenan, J. H., Keyes, F. G., Hill. P. G., and Moore, J. G., *Steam Tables*, John Wiley and Sons, Inc., New York, 1969. NNA.19900604.0041.

4.6 *Metals Handbook*, Volume 2, "Properties and Selection: Nonferrous Alloys and Pure Metals," 9th Edition, ASM, 1989. NNA.19900108.0326.

Table of Contents

Contents	Page
1. Introduction	5
2. Dataset Structure and Contents	5
3. Dataset Creation	9
3.1. Dataset Title Record	9
3.2. Namelist Input	9
3.3. Dataset Location	9
4. References	16

List of Figures

Figure	Contents	Page
Figure 2-1	Lattice Parameters for GE 7x7 Lattice	7
Figure 2-2	Illustration of GE 8x8 Lattice with Large Central Water Rod	8
Figure 3-1	Lattice Geometry Dataset for GE 7x7 Lattice	10
Figure 3-2	Lattice Geometry Dataset for GE 8x8 Lattice with Small Water Rods	10
Figure 3-3	Lattice Geometry Dataset for GE 8x8 Lattice with Large Central Water Rod	11

List of Tables

Table	Contents	Page
Table 2-1	Contents of Dataset for Fuel Lattices	6

List of Worksheets

Worksheet	Contents	Page
Worksheet 3-1	Namelist Input Development for GE 7x7 Lattice	12
Worksheet 3-2	Namelist Input Development for GE 8x8 Lattice with Small Water Rods	13
Worksheet 3-3	Namelist Input Development for GE 8x8 Lattice with Large Central Water Rod	14

1. Introduction

This attachment describes the creation of the datasets defining the fuel assembly lattices. It provides a detailed list of contents for such datasets and documents the creation of the datasets of this type used in the present analysis.

2. Dataset Structure and Contents

The dataset structure is an ASCII-format file that incorporates FORTRAN Namelist-type input. The contents of this dataset for BWR fuel are given in Table 2-1. Note that all dimensional values in this dataset are in units of centimeters. In this table the format of each datum is given. The locations of most of the geometrical parameters shown in this table are shown in Figure 2-1 for a GE 7x7 lattice. The layout of a GE 8x8 lattice which incorporates a large central water rod is shown in Figure 2-2.

Table 2-1 Contents of Dataset for Fuel Lattices

Mnemonic	Definition	Comments	Format
Title	Dataset Title	Character String – Describes Application for this Dataset	Single Line
ASIN	Inner Span of Assembly (cm)	Defines Active Flow Area of Lattice	NAMELIST
WGAP	Wide Gap Thickness (cm)	Defines Placement of Channel within Control Cell	NAMELIST
NGAP	Narrow Gap Thickness (cm)	Defines Placement of Channel within Control Cell	NAMELIST
CTHICK	Channel Thickness (cm)	Defines Channel Component	NAMELIST
CRADIUS	Inner Radius of Channel Corner (cm)	Defines Channel Component	NAMELIST
FRSD	Clad Surface to Clad Surface Separation (cm)	Used for Relative Positioning of Fuel Rods	NAMELIST
CFRSD	Clad Surface to Inner Channel Surface Separation (cm)	Situates Fuel Rods with respect to Channel	NAMELIST
RPITCH	Fuel Rod Pitch (cm)	Used for Relative Positioning of Fuel Rods	NAMELIST
COD	Cladding Outer Diameter (cm)	Used to Dimension Fuel Rod Components	NAMELIST
CLD	Cladding Thickness (cm)	Used to Dimension Fuel Rod Components	NAMELIST
POD	Pellet Outer Diameter (cm)	Used to Dimension Fuel Rod Components	NAMELIST
FRCMAT	Material Identifier for Fuel Rod Cladding (cm)		NAMELIST
FCMAT	Material Identifier for Channel		NAMELIST
LATDIM	Lattice Dimensionality		NAMELIST
NWR	Number of Water Rods		NAMELIST
WROD	Outer Diameter for Water Rod(s) (cm)	Only used if Water Rod(s) are Differently Sized than Fuel Rod Cladding	NAMELIST
WRTH	Thickness of Water Rod(s) (cm)	Only used if Water Rod(s) are Differently Sized than Fuel Rod Cladding	NAMELIST

Figure 2-1 Lattice Parameters for GE 7x7 Lattice

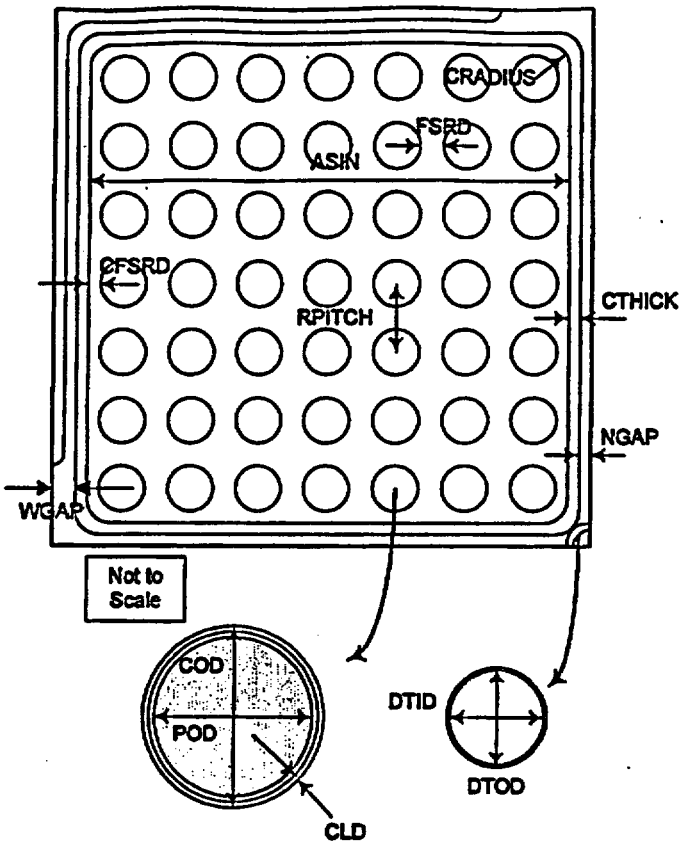

Figure 2-2 Illustration of GE 8x8 Lattice with Large Central Water Rod

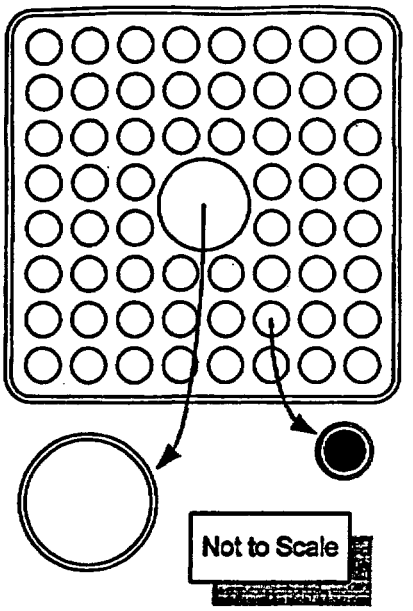

3. Dataset Creation

Each group of data in the dataset will now be discussed in greater detail and the creation of the datasets for a GE 7x7 lattice, GE 8x8 lattice with small – i.e., fuel rod-sized – water rods and a GE 8x8 lattice with a large central water rod (displacing four fuel rods) documented. The final datasets are shown in Figures 3-1, 3-2 and 3-3 (most of the values are from the EPRI report for the Quad Cities Unit-1 initial core design – Reference 4.1 – hereafter cited as the "EPRI Report").

3.1. Dataset Title Record

The first line of the dataset is a title. While the contents of this line are arbitrary, it should contain the following information to ensure consistency with the file name:

- dimensionality of the lattice;
- important characteristics of lattice (such as the number of water rods, if any);
- manufacturer; and
- BWR lattice (D-lattice in all these examples).

3.2. Namelist Input

The FORTRAN namelist-type input variables must adhere to the restrictions inherent in the format of such input. Care must be taken to ensure that the value provided is consistent with the data storage class in the automation (i.e., integer input for integer variables and real input for real variables) so that neither precision is lost for real variables and nor is illusory precision implied for integer variables.

The development of the values appropriate for the 7x7 GE lattice is shown in Worksheet 3-1. That for the GE 8x8 lattice with small water rods is provided in Worksheet 3-2, while the same information for the GE 8x8 lattice with a large central water rod is given in Worksheet 3-3.

3.3. Dataset Location

This datasets have the following file names:

- ge7x7.dat
- ge8x8_swr_2.dat
- ge8x8_lcwr.dat

Figure 3-1 Lattice Geometry Dataset for GE 7x7 Lattice

```
GE 7x7 D-lattice/No Water Rod/No Curtains/
$FUEL
 CTHICK = 0.20
 ASIN = 13.406
 WGAP = 0.953
 NGAP = 0.478
 CRADIUS = 1.02
 FSRD = 0.445
 CFSRD = 0.3645
 RPITCH = 1.875
 COD = 1.430
 CLD = 0.081
 POD = 1.240
 FRCMAT = 'ZIRC2'
 FCMAT = 'ZIRC4'
 LATDIM = 7
 NWR = 0
$END
```

Figure 3-2 Lattice Geometry Dataset for GE 8x8 Lattice with Small Water Rods

```
GE 8x8 D-lattice/Two Water Rods/No Curtains/
$FUEL
 CTHICK = 0.20
 ASIN = 13.406
 WGAP = 0.953
 NGAP = 0.478
 CRADIUS = 1.02
 FSRD = 0.196
 CFSRD = 0.3874
 RPITCH = 1.626
 COD = 1.252
 CLD = 0.086
 POD = 1.057
 FRCMAT = 'ZIRC2'
 FCMAT = 'ZIRC4'
 LATDIM = 8
 NWR = 2
$END
```

Figure 3-3 Lattice Geometry Dataset for GE 8x8 Lattice with Large Central Water Rod

```
GE 8x8 D-lattice/Large Central Water Rod/No Curtains/
$FUEL
 CTHICK = 0.20
 ASIN = 13.406
 WGAP = 0.953
 NGAP = 0.478
 CRADIUS = 1.02
 FSRD = 0.196
 CFSRD = 0.3874
 RPITCH = 1.6256
 COD = 1.2268
 CLD = 0.0813
 POD = 1.0414
 FRCMAT = 'ZIRC2'
 FCMAT = 'ZIRC4'
 LATDIM = 8
 NWR = 1
 WROD = 2.6187
 WRTH = 0.0813
$END
```

Worksheet 3-1 Namelist Input Development for GE 7x7 Lattice

		Reference			
Mnemonic	Definition	Value	Units	Source	Name
	Outside Span of Channel	5.438	inches	[a]	ASOUT
CTHICK	Channel Wall Thickness	0.080	inches	[a]	CTHICK
ASIN	Inner Span of Channel	n/a	n/a	n/a	ASIN
WGAP	Wide Gap Half-thickness	0.375	inches	[a]	WGAP
NGAP	Narrow Gap Half-thickness	0.188	inches	[a]	NGAP
CRADIUS	Channel Corner Inner Radius	0.40	inches	[a]	CRADIUS
FSRD	Cladding to Cladding Distance for Fuel Rods	n/a	n/a	n/a	FSRD
CFSRD	Cladding to Channel Inner Surface Separation of Edge Row of Fuel Rods	0.1435	inches	[a]	CFSRD
RPITCH	Fuel Rod Pitch	0.738	inches	[a]	RPITCH
COD	Fuel Rod Cladding Outer Diameter	0.563	inches	[b]	COD
CLD	Fuel Rod Cladding Thickness	0.032	inches	[b]	CLD
POD	Fuel Pellet Outer Diameter [c]	0.488	inches	[b]	POD

[a]. This data is from the EPRI Report, Table 1.
[b]. This data is from the EPRI Report, Table 4.
[c]. The slightly smaller diameter of Gadolinia-bearing pellets (viz., 0.487 inches) is neglected.

Worksheet 3-1 (cont'd)

		Dataset		
Mnemonic	Definition	Value	Units	Computation
	Outside Span of Channel	13.81	cm	= 2.54*ASOUT
CTHICK	Channel Wall Thickness	0.20	cm	= 2.54*CTHICK
ASIN	Inner Span of Channel	13.406	cm	= 2.54*(ASOUT-2*CTHICK)
WGAP	Wide Gap Half-thickness	0.953	cm	= 2.54*WGAP
NGAP	Narrow Gap Half-thickness	0.478	cm	= 2.54*NGAP
CRADIUS	Channel Corner Inner Radius	1.02	cm	= 2.54*CRADIUS
FSRD	Cladding to Cladding Distance for Fuel Rods	0.445	cm	= 2.54*(RPITCH-COD)
CFSRD	Cladding to Channel Inner Surface Separation of Edge Row of Fuel Rods	0.3645	cm	= 2.54*CFSRD
RPITCH	Fuel Rod Pitch	1.875	cm	= 2.54*RPITCH
COD	Fuel Rod Cladding Outer Diameter	1.430	cm	= 2.54*COD
CLD	Fuel Rod Cladding Thickness	0.081	cm	= 2.54*CLD
POD	Fuel Pellet Outer Diameter [c]	1.240	cm	= 2.54*POD

Worksheet 3-2 Namelist Input Development for GE 8x8 Lattice with Small Water Rods

		Reference			
Mnemonic	Definition	Value	Units	Source	Name
	Outside Span of Channel	5.438	inches	[a]	ASOUT
CTHICK	Channel Wall Thickness	0.080	inches	[a]	CTHICK
ASIN	Inner Span of Channel	n/a	n/a	n/a	ASIN
WGAP	Wide Gap Half-thickness	0.375	inches	[a]	WGAP
NGAP	Narrow Gap Half-thickness	0.188	inches	[a]	NGAP
CRADIUS	Channel Corner Inner Radius	0.40	inches	[a]	CRADIUS
FSRD	Cladding to Cladding Distance for Fuel Rods	n/a	n/a	n/a	FSRD
CFSRD	Cladding to Channel Inner Surface Separation of Edge Row of Fuel Rods	0.1525	inches	[a]	CFSRD
RPITCH	Fuel Rod Pitch	0.64	inches	[a]	RPITCH
COD	Fuel Rod Cladding Outer Diameter	0.493	inches	[b]	COD
CLD	Fuel Rod Cladding Thickness	0.034	inches	[b]	CLD
POD	Fuel Pellet Outer Diameter	0.416	inches	[b]	POD
NWR	Number of Water Rods	2	n/a	[c]	NWR

[a]. This data is from the EPRI Report, Table 2.
[b]. This data is from the EPRI Report, Table 9. Note that this values differ slightly from those provided in the QAP-3-5 document for the Quad Cities Unit 2 CRC Data (Reference 4.2, §2, the hereafter cited as the "QC2 3-5 Document"); however, the effect on neutron multiplication should be small.
[c]. This data is from the QC2 3-5 Document, §2.

Worksheet 3-2 (cont'd)

		Dataset		
Mnemonic	Definition	Value	Units	Computation
	Outside Span of Channel	13.81	cm	= 2.54*ASOUT
CTHICK	Channel Wall Thickness	0.20	cm	= 2.54*CTHICK
ASIN	Inner Span of Channel	13.406	cm	= 2.54*(ASOUT-2*CTHICK)
WGAP	Wide Gap Half-thickness	0.953	cm	= 2.54*WGAP
NGAP	Narrow Gap Half-thickness	0.478	cm	= 2.54*NGAP
CRADIUS	Channel Corner Inner Radius	1.02	cm	= 2.54*CRADIUS
FSRD	Cladding to Cladding Distance for Fuel Rods	0.373	cm	= 2.54*(RPITCH-COD)
CFSRD	Cladding to Channel Inner Surface Separation of Edge Row of Fuel Rods	0.3874	cm	= 2.54*CFSRD
RPITCH	Fuel Rod Pitch	1.626	cm	= 2.54*RPITCH
COD	Fuel Rod Cladding Outer Diameter	1.252	cm	= 2.54*COD
CLD	Fuel Rod Cladding Thickness	0.086	cm	= 2.54*CLD
POD	Fuel Pellet Outer Diameter	1.057	cm	= 2.54*POD
NWR	Number of Water Rods	2	n/a	n/a

Worksheet 3-3 Namelist Input Development for GE 8x8 Lattice with Large Central Water Rod

		Reference			
Mnemonic	Definition	Value	Units	Source	Name
	Outside Span of Channel	5.438	inches	[a]	ASOUT
CTHICK	Channel Wall Thickness	0.080	inches	[a]	CTHICK
ASIN	Inner Span of Channel	n/a	n/a	n/a	ASIN
WGAP	Wide Gap Half-thickness	0.375	inches	[a]	WGAP
NGAP	Narrow Gap Half-thickness	0.188	inches	[a]	NGAP
CRADIUS	Channel Corner Inner Radius	0.40	inches	[a]	CRADIUS
FSRD	Cladding to Cladding Distance for Fuel Rods	n/a	n/a	n/a	FSRD
CFSRD	Cladding to Channel Inner Surface Separation of Edge Row of Fuel Rods	0.1525	inches	[a]	CFSRD
RPITCH	Fuel Rod Pitch	0.64	inches	[b]	RPITCH
COD	Fuel Rod Cladding Outer Diameter	0.483	inches	[b]	COD
CLD	Fuel Rod Cladding Thickness	0.032	inches	[b]	CLD
POD	Fuel Pellet Outer Diameter	0.410	inches	[b]	POD
NWR	Number of Water Rods	1	n/a	[b]	NWR

[a]. This data is from the EPRI Report, Table 2.
[b]. This data is from the QC2 3-5 Document.

Worksheet 3-3 (cont'd)

		Dataset		
Mnemonic	Definition	Value	Units	Computation
	Outside Span of Channel	13.81	cm	= 2.54*ASOUT
CTHICK	Channel Wall Thickness	0.20	cm	= 2.54*CTHICK
ASIN	Inner Span of Channel	13.406	cm	= 2.54*(ASOUT-2*CTHICK)
WGAP	Wide Gap Half-thickness	0.953	cm	= 2.54*WGAP
NGAP	Narrow Gap Half-thickness	0.478	cm	= 2.54*NGAP
CRADIUS	Channel Corner Inner Radius	1.02	cm	= 2.54*CRADIUS
FSRD	Cladding to Cladding Distance for Fuel Rods	0.399	cm	= 2.54*(RPITCH-COD)
CFSRD	Cladding to Channel Inner Surface Separation of Edge Row of Fuel Rods	0.3874	cm	= 2.54*CFSRD
RPITCH	Fuel Rod Pitch	1.6256	cm	= 2.54*RPITCH
COD	Fuel Rod Cladding Outer Diameter	1.2268	cm	= 2.54*COD
CLD	Fuel Rod Cladding Thickness	0.0813	cm	= 2.54*CLD
POD	Fuel Pellet Outer Diameter	1.0414	cm	= 2.54*POD
NWR	Number of Water Rods	1	n/a	n/a

4. References

4.1 *Core Design and Operating Data for Cycles 1 and 2 of Quad Cities 1*, EPRI NP-240, Electric Power Research Institute, Palo Alto, California, November 1976. TIC #: 237267.

4.2 *Summary Report of Commercial Reactor Criticality Data for Quad Cities Unit 2*, DI#: B00000000-01717-5705-00096 REV 00, CRWMS M&O. MOL.19980730.0509.

Table of Contents

Contents	Page
1. Introduction	5
2. Dataset Structure and Contents	5
3. Dataset Creation	8
3.1. Dataset Title Record	8
3.2. Namelist Input	8
3.3. Dataset Location	8
4. References	12

List of Figures

Figure	Contents	Page
Figure 2-1	Geometry Parameters for GE D-lattice Control Blade	7
Figure 3-1	Lattice Geometry Dataset for GE D-lattice Control Blade	9

List of Tables

Table	Contents	Page
Table 2-1	Contents of Dataset for BWR Control Blade	6

List of Worksheets

Worksheet	Contents	Page
Worksheet 3-1	Namelist Input Development	10

1. Introduction

This attachment describes the creation of the datasets defining the control blades. It provides a detailed list of contents for such datasets and documents the creation of the datasets of this type used in the present analysis.

2. Dataset Structure and Contents

The dataset structure is an ASCII-format file that incorporates FORTRAN Namelist-type input. The relevance of each of these variables to the blade dimensions is shown in Figures 2-1. This illustration shows a GE D-lattice Original Equipment blade. The contents of this dataset for a D-lattice control blade are given in Table 2-1 (values are from the EPRI report for the initial core design, Reference 4.1, hereafter cited as the "EPRI Report"). In this table the format of each datum is given.

Table 2-1 Contents of Dataset for BWR Control Blade

Mnemonic	Definition	Comments	Format
Title	Dataset Title	Character String – Describes Application for this Dataset (Class of BWR to which it is Applicable)	Single Line
NTUBE	Number of Absorber Tubes	Defines the Number of Absorber Tubes to Populate the Wings of the Blade	NAMELIST
CBSPAN	Control Blade Span (cm)	Span of Individual Wing (from Tie Rod Center to Tip)	NAMELIST
ATID	Absorber Tube Inner Diameter (cm)	Sizes Individual Absorber Tubes	NAMELIST
ATOD	Absorber Tube Outer Diameter (cm)	Sizes Individual Absorber Tubes	NAMELIST
CBTHICK	Wing Thickness (cm)		NAMELIST
TRSPAN	Tie Rod Span (cm)	Helps to Situate Absorber Tubes in the Wing	NAMELIST
TRTHICK	Tie Rod Thickness (cm)	Define the Width of the Channel formed for the Absorber Tubes	NAMELIST
WSTHICK	Sheath Thickness (cm)	Defines Wing Sheaths	NAMELIST
CBLENGTH	Control Length (cm)	Length of Absorber Material	NAMELIST
NCS	Number of Wing Central Stiffeners	Only Zero and Unity are Valid Entries	NAMELIST
CSOFF	Central Stiffener Offset (cm)	Distance from Center of Tie Rod to Center of Central Stiffener	NAMELIST
CSWIDTH	Central Stiffener Width (cm)	Width of Central Stiffener	NAMELIST
CBPMAT	Poison Material	Five Character Identifier for Blade Poison Material from Core Structural Materials Databset (see Attachment 3)	NAMELIST
ATMAT	Absorber Tube Material	Five Character Identifier for Blade Absorber Tube Wall Material from Core Structural Materials Databset (see Attachment 3)	NAMELIST
CBSMAT	Sheath Material	Five Character Identifier for Blade Sheath Material from Core Structural Materials Databset (see Attachment 3)	NAMELIST
CBTRMAT	Tie Rod Material	Five Character Identifier for Blade Tie Rod Material from Core Structural Materials Databset (see Attachment 3)	NAMELIST

Figure 2-1 Geometry Parameters for GE D-lattice Control Blade

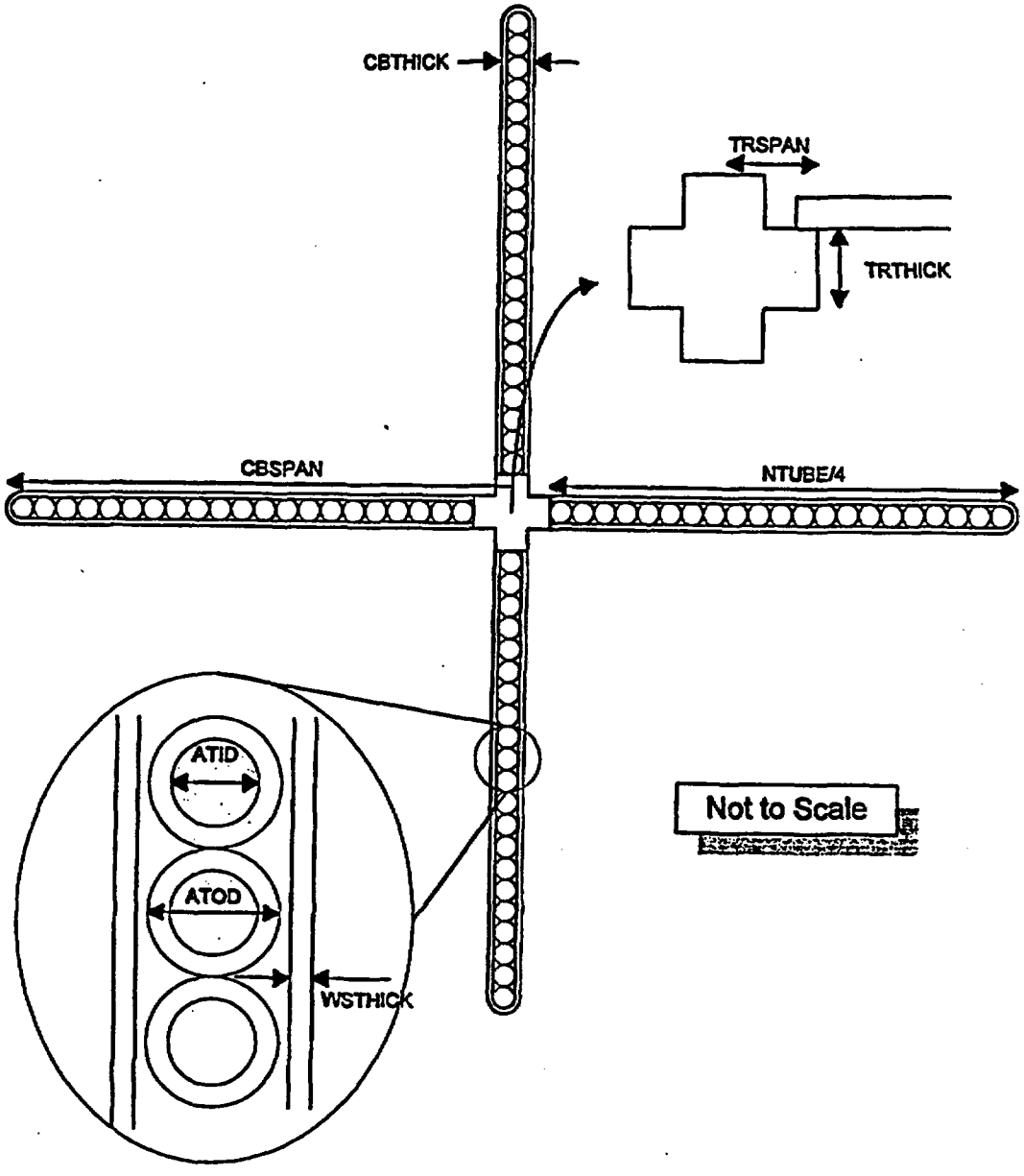

3. Dataset Creation

Each group of data in the dataset will now be discussed in greater detail and the creation of the dataset for a D-lattice GE control blade documented. The final dataset is shown in Figure 3-1.

3.1. Dataset Title Record

The first line of the dataset is a title. While the contents of this line are arbitrary, it should contain the following information to ensure consistency with the file name:

- manufacturer; and
- BWR lattice (D-lattice in this case).

3.2. Namelist Input

The FORTRAN namelist-type input variables must adhere to the restrictions inherent in the format of such input. Care must be taken to ensure that the value provided is consistent with the data storage class in the automation (i.e., integer input for integer variables and real input for real variables) so that neither precision is not lost for real variables nor is illusory precision implied for integer variables.

The development of the values appropriate for the D-lattice GE control blade is shown in Worksheet 3-1.

3.3. Dataset Location

The dataset for the GE D-lattice blade in named: ge_d_lattice.dat.

Figure 3-1 Lattice Geometry Dataset for GE D-lattice Control Blade

```
GE D-lattice Control Blade
$BLADE
 NTUBE = 84
 CBSPAN = 12.38
 ATOD = 0.478
 ATID = 0.351
 CBTHICK = 0.7925
 WSTHICK = 0.14
 TRSPAN = 1.985
 TRTHICK = 0.508
 CBLENGTH = 363.2
 CBPMAT = 'B4C'
 ATMAT = 'SS304'
 CBSMAT = 'SS304'
 CBTRMAT = 'SS304'
$END
```

Worksheet 3-1 Namelist Input Development

		Reference			
Mnemonic	Definition	Value	Units	Source	Name
NTUBE	Number of Absorber Tubes in Blade	84	N/A	[a]	N/A
CBSPAN	Span of Blade from Center of Tie Rod to Wing Tip	4.875	inches	[a]	CBSPAN
ATOD	Absorber Tube Outer Diameter	0.188	inches	[a]	ATOD
	Absorber Tube Thickness	0.025	inches	[a]	ATD
ATID	Absorber Tube Inner Diameter	N/A	N/A	N/A	ATID
CBTHICK	Control Blade Wing Thickness	0.3120	inches	[a]	CBTHICK
WSTHICK	Blade Sheath Thickness	0.056	inches	[a]	WSTHICK
TRSPAN	Tie Rod Span (Half of Total)	0.7815	inches	[a]	TRSPAN
TRTHICK	Tie Rod Thickness	N/A	N/A	N/A	N/A
CBLENGTH	Control Length	143.0	inches	[a]	CBLENGTH
CBPMAT	Poison	B4C	N/A	[a]	N/A
ATMAT	Absorber Tube Material Identifier	SS304	N/A	[b]	N/A
CBSMAT	Sheath Material	SS304	N/A	[b]	N/A
CBTRMAT	Tie Rod Material	SS304	N/A	[b]	N/A

[a]. This data is from the EPRI Report, Table 13.
[b]. This assumes that the stainless steel used in the blade components is the same as that used in the fuel assembly tie plate (see Table 12 of the EPRI Report).

Worksheet 3-1 (cont'd)

		Dataset		
Mnemonic	Definition	Value	Units	Computation
NTUBE	Number of Absorber Tubes in Blade	84	N/A	N/A
CBSPAN	Span of Blade from Center of Tie Rod to Wing Tip	12.38	cm	= 2.54*CBSPAN
ATOD	Absorber Tube Outer Diameter	0.478	cm	= 2.54*ATOD
	Absorber Tube Thickness	0.064	cm	= 2.54*ATD
ATID	Absorber Tube Inner Diameter	0.351	cm	= 2.54*(ATOD-2*ATD)
CBTHICK	Control Blade Wing Thickness	0.7925	cm	= 2.54*CBTHICK
WSTHICK	Blade Sheath Thickness	0.14	cm	= 2.54*WSTHICK
TRSPAN	Tie Rod Span (Half of Total)	1.985	cm	= 2.54*TRSPAN
TRTHICK	Tie Rod Thickness	0.508	cm	= 2.54*(CBTHICK-2*WSTHICK)
CBLENGTH	Control Length	363.2	cm	= 2.54*CBLENGTH

4. References

4.1 *Core Design and Operating Data for Cycles 1 and 2 of Quad Cities 1*, EPRI NP-240, Electric Power Research Institute, Palo Alto, CA, November 1976. TIC #: 237267.

Table of Contents

Title	Page
1. Introduction	4
2. Specifications	4
3. Encoding of Process	4
3.1. Program Flow	4
3.2. Input Parameters to Process	9
3.3. Detailed Algorithms	12
4. Testing	34
5. Integration Testing	40
6. References	41

List of Tables

Table	Contents	Page
Table 3-1	Input Variables	9
Table 3-2	Service Routine List	14
Table 3-3	Type Description for Structured Variables	15
Table 3-4	List of Input Routines	16
Table 3-5	Input Editing Routine List	21
Table 3-6	Deck Generation Routine Listing	29
Table 4-1	Input Values used to Create Vessel and Core Internals Models	35
Table 4-2	Surface Definitions for Vessel and Core Internals Models	36
Table 4-3	Cell Definitions for Vessel and Core Internals Models	38
Table 5-1	Results of Integration Testing Case	40

List of Figures

Figure	Contents	Page
Figure 3-1	Top Level Flowchart	5
Figure 3-2	BLINK Input Deck for Quad Cities Unit-1 Initial Core	11
Figure 3-3	Illustration of Linked List Concept	13
Figure 3-4	Flowchart for Input Processing	17
Figure 3-5	Input Editing Flowchart	22
Figure 3-6	Building of Core Model from Unique Components	24
Figure 3-7	"Window" for Fuel Assembly in Control Cell	26
Figure 3-8	Window in Control Cell Model for Control Blade	27
Figure 3-9	Assembly Loading into Control Cell	28
Figure 3-10	Deck Generation Flowchart	30

1. Introduction

This attachment contains the detailed specifications for and documents the development of a software routine to create MCNP input decks (References 6.1 and 6.2 – the Los Alamos National Laboratory (LANL) User's Manuals – and References 6.3 and 6.4 – the Software Qualification Reports) for analyzing Commercial Reactor Criticals (CRC's) using isotopic inventories from the SAS2H sequence of the SCALE code (Reference 6.5–the Software Qualification Report).

2. Specifications

This process must include the following functions:

- accept input from the user that controls the operation of the software routine and specifies the source of information about the fuel assemblies geometry and material composition, control blades and reactor statepoint;
- generate a complete MCNP input card image representation that permits a CRC analysis to be performed without additional modification;
- create an output file that documents the processing performed.

3. Encoding of Process

The computational algorithms and the process described in Attachment VII must be encoded in a software routine on an HP workstation. For this application, a mixture of C and FORTRAN coding is used. The name for this software routine is "BLINK".

3.1. Program Flow

A top-level flowchart for the software routine is shown in Figure 3-1.

Figure 3-1 Top Level Flowchart

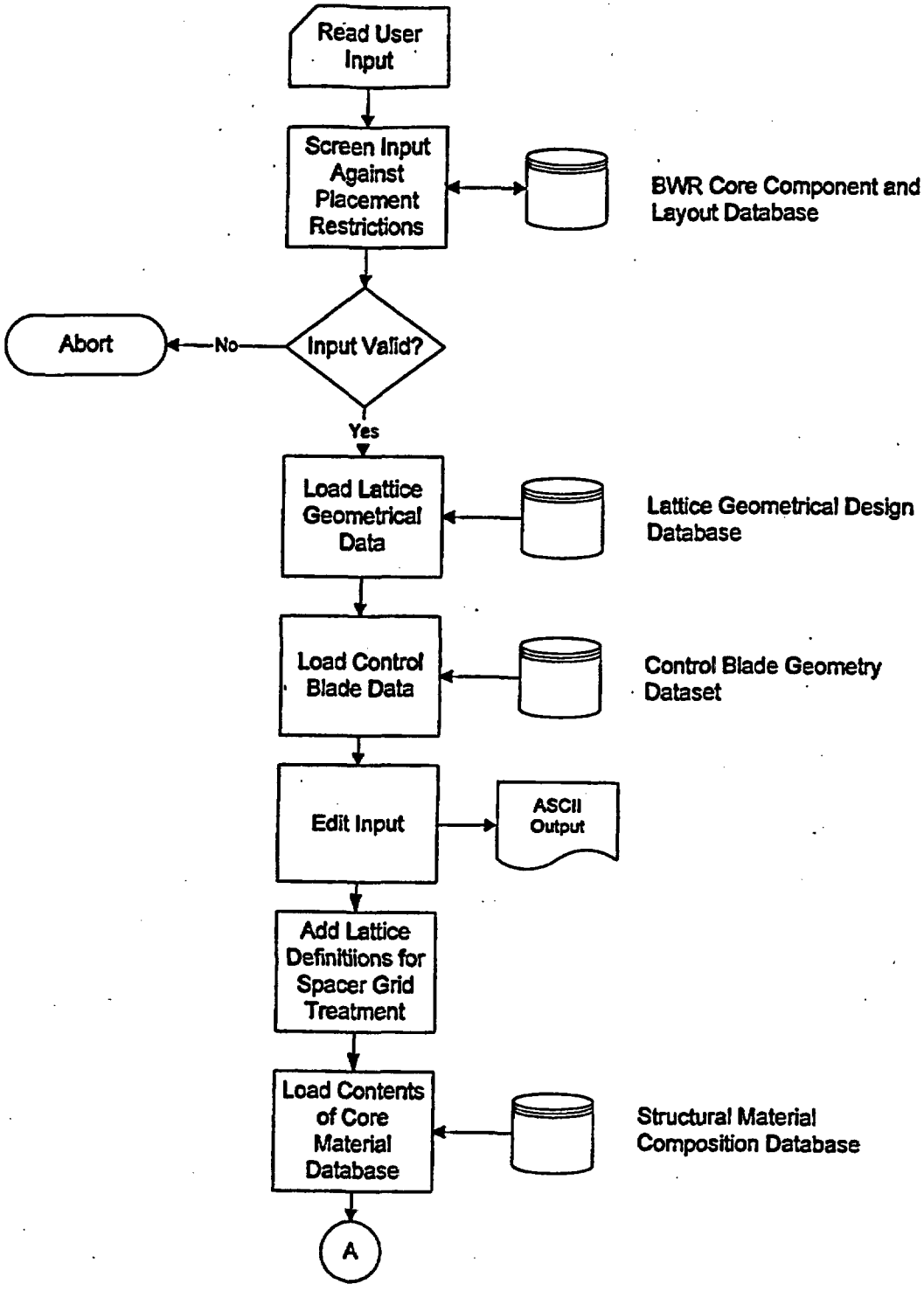

Figure 3-1 (cont'd)

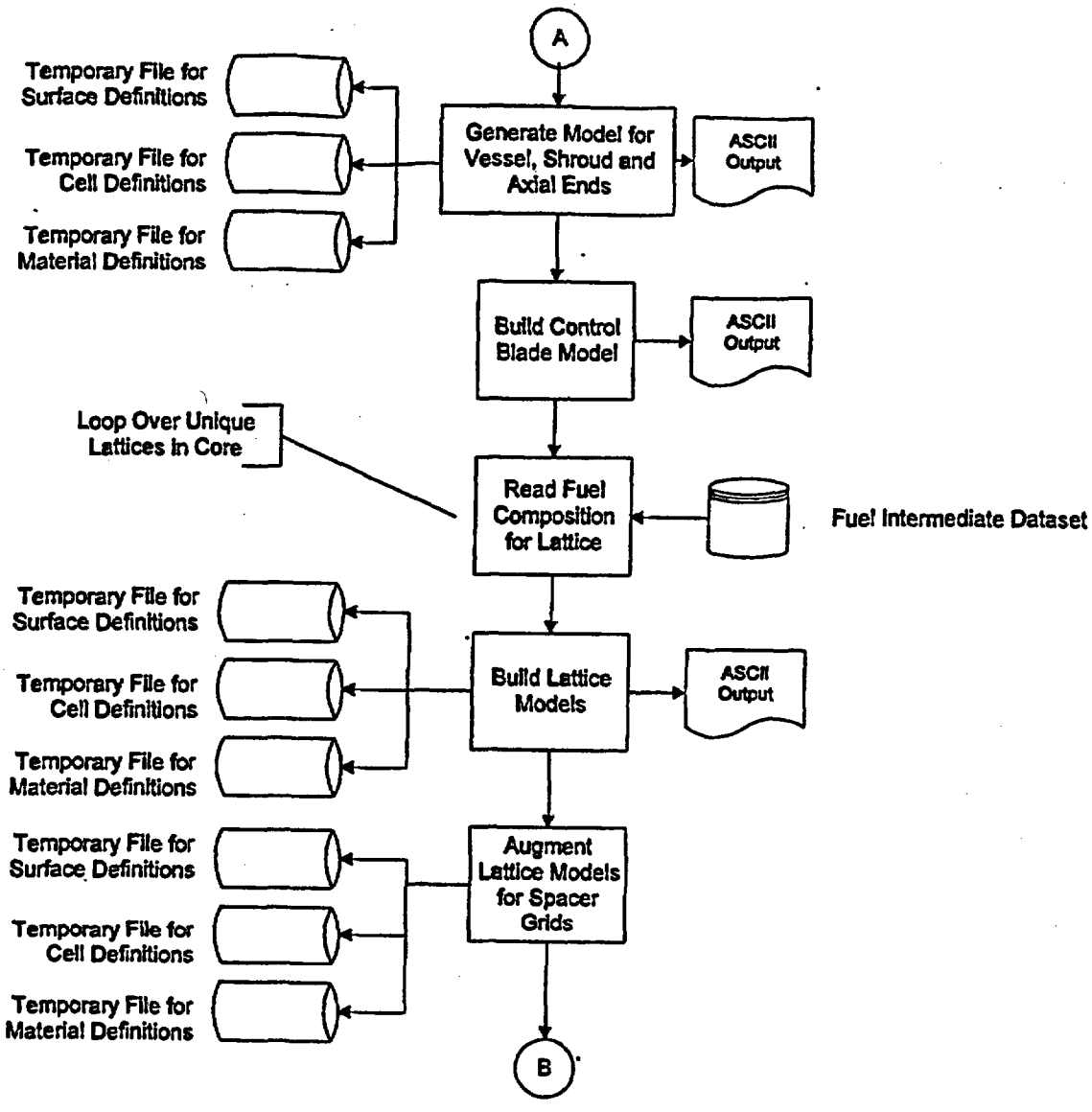

Figure 3-1 (cont'd)

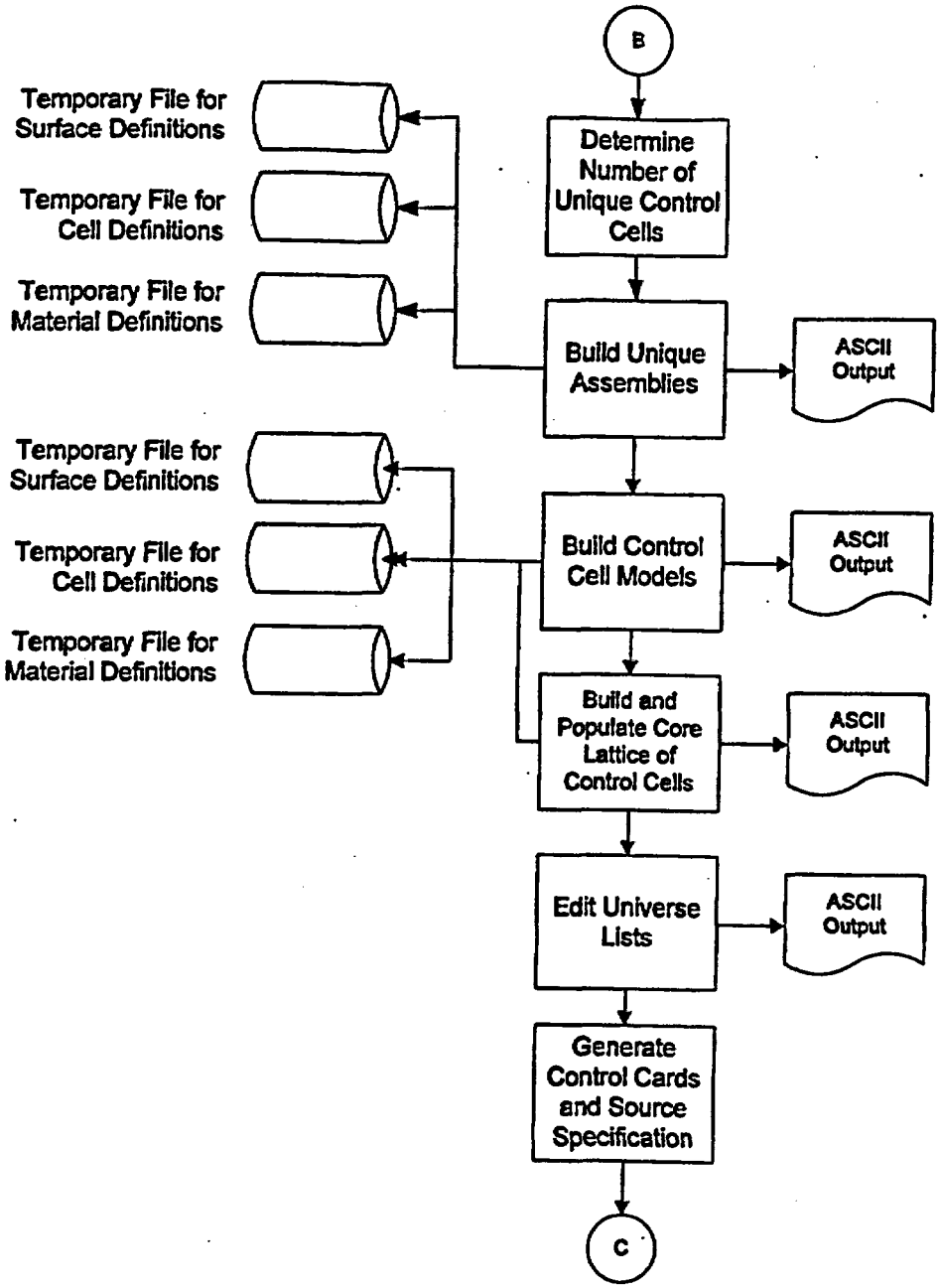

Figure 3-1 (cont'd)

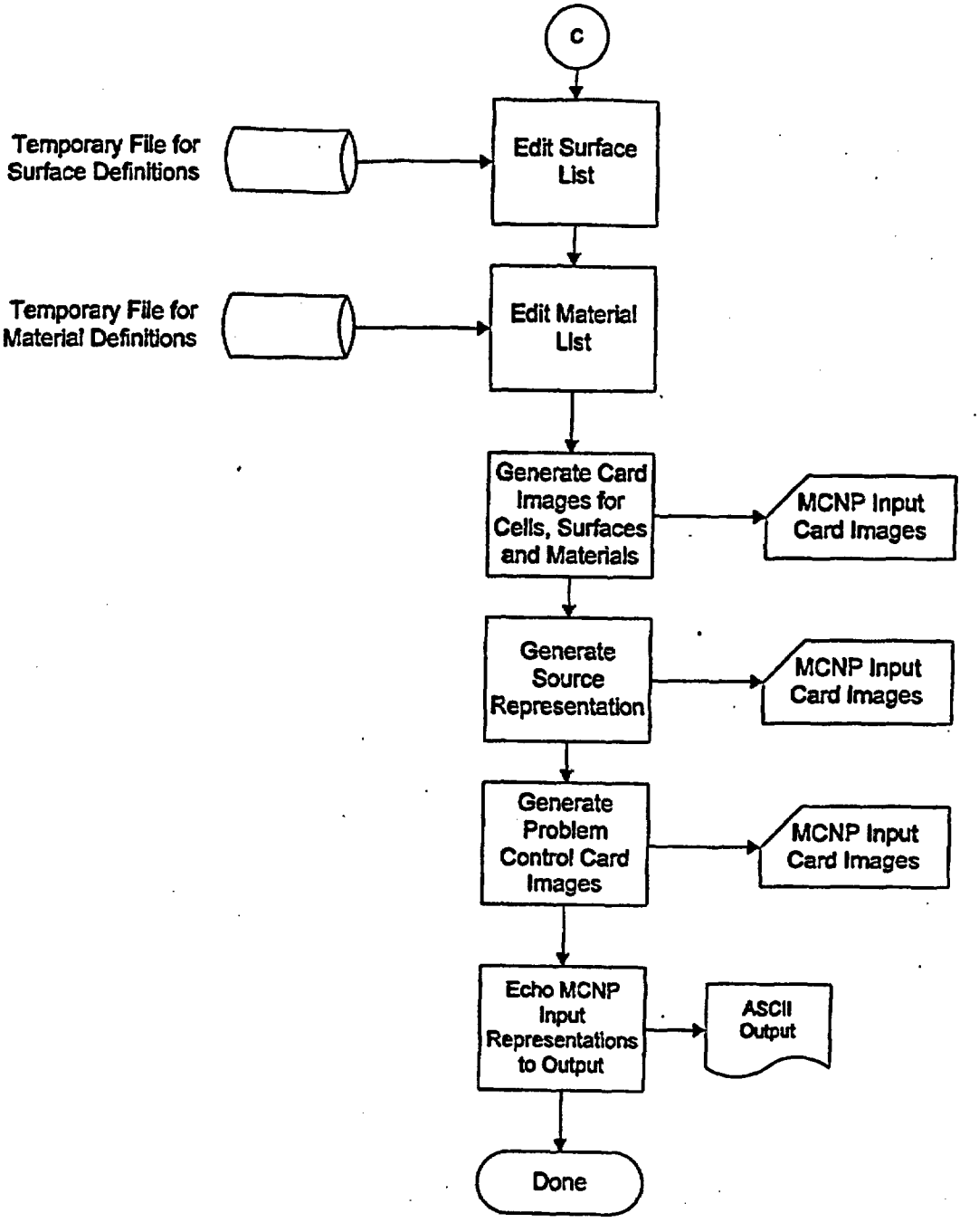

3.2. Input Parameters to Process

The input to the linkage software routine is all the information necessary to construct an MCNP geometrical representation of the core and populate it with the proper material representation. The input is an ASCII-format file that incorporates both FORTRAN Namelist-type input and fields of space-delimited data. The input variables are described in Table 3-1. A copy of the input deck for the Quad Cities Unit-1 initial core is shown in Figure 3-2.The automation also makes use of a large number of prepared datasets to minimize the size of the input file.

3.2.1. Dataset Title Record

The first line of the dataset is a title. While the contents of this line are arbitrary, good practice indicates that it should contain the following information:

- name of plant modeled,
- cycle and exposure point,
- thermal-hydraulic conditions, and
- software routine execution options.

3.2.2. Namelist Input

The FORTRAN namelist-type input variables must adhere to the restrictions inherent in the format of such input. Care must be taken to ensure that the value provided is consistent with the data storage class in the automation (i.e., integer input for integer variables and real input for real variables) so that neither precision is not lost for real variables nor is illusory precision implied for integer variables.

3.2.3. List Input Fields

These fields are used for vectors and arrays of data, such as indices to fuel assembly axial nodes and "maps" indicating the locations of fuel assembly geometrical types. While these are read in a "free-format," good practice indicates that they should be arrayed in a regular fashion that maximizes legibility. The list input fields are preceded by a title line in every instance.

Table 3-1 Input Variables

Variable	Definition	Comments	Format
Title	Case Title	Character String -- Describes Analysis	Single Line
CORE_DB	File Specification for Core Geometry Database		Namelist
CORE_MTLS	File Specification for Core Materials Database		Namelist
BLADE_DB	File Specification for Control Blade Geometry Database		Namelist
FPREFIX	Directory Specification for Location of Fuel Material Intermediate Database		Namelist
LPREFIX	Directory Specification for Location of Lattice Geometry Database		Namelist
NAXIAL	Number of Axial Nodes in Core Representation	Must be Consistent with SAS2H Analysis forming the Source of the Fuel Material	Namelist

Variable	Definition	Comments	Format
		Compositions	
AFL	Active Fuel Length	Value must be in centimeters	Namelist
NCOLP	Maximum Number of Columns of Fuel Assemblies in the Problem	May be Consistent with Quarter-core, Half-core or Full-core Representations	Namelist
NROWP	Maximum Number of Rows of Fuel Assemblies in the Problem	May be Consistent with Quarter-core, Half-core or Full-core Representations	Namelist
RHO	Density for in-channel Moderator	Units are g/cm^3	Namelist
RHOBYP	Density for Moderator in Bypass Region	Units are g/cm^3	Namelist
TEMPK	Problem Temperature for Scattering Kernel	Units are Kelvin	Namelist
MUTP	Material Identifier for Upper Tie Plate Region	Maximum of Six Characters	Namelist
MLTP	Material Identifier for Lower Tie Plate Region	Maximum of Six Characters	Namelist
GMAP	Map Pointing to Fuel Assembly Geometrical Dataset Vectors		List Format
MMAP	Map Pointing to Fuel Material Intermediate Dataset Vectors		List Format
BLADEP	Control Blade Position	Map of Control Blade Positions (must be an even integer between 0 and 48, inclusive)	List Format
LGVECT	Lattice Geometry Vectors	Supplies Description of Datasets that Represent the Geometry of the Lattices	List Format
LMVECT	Lattice Material Vectors	Supplies Description of Datasets that Represent the Material Composition of the Lattices	List Format
N_SPACER	Number of Spacers for each Geometrical Fuel Type		List Format
S_LOC	Spacer Location for Each Spacer for a Given Geometrical Fuel Type		List Format
S_MTL	Spacer Material Label for Each Geometrical Fuel Type		List Format

Figure 3-2 BLINK Input Deck for Quad Cities Unit-1 Initial Core

```
Quad Cities-1, Beginning of Life
$LINKIN
 CORE_DB = '/users/anderson/crc_bwr/core_database/bwr3_724bundle.dat'
 CORE_MTLS = '/users/anderson/crc_bwr/materials_database/core_materials.dat'
 BLADE_DB = '/users/anderson/crc_bwr/blade_database/ge_d_lattice.dat'
 LPREFIX = '/users/anderson/crc_bwr/qclic/lattice_database/'
 FPREFIX = '/users/anderson/crc_bwr/qclic/fuel_composition_database/'
 NAXIAL = 24
 AFL = 365.760
 NCOLP = 15
 NROWP = 15
 RHO = 0.981141
 RHOBYP = 0.981141
 TEMPK = 337.04
 MUTP = '7GUTP1'
 MLTP = '7GLTP1'
$END
Fuel Geometry Loading Map
 0 0 0 0 0 0 0 0 0 0 1 1 1 1 1
 0 0 0 0 0 0 0 0 0 1 1 1 1 1 1
 0 0 0 0 0 0 1 1 1 1 1 1 1 1 1
 0 0 0 0 0 1 1 1 1 1 1 1 1 1 1
 0 0 0 0 1 1 1 1 1 1 1 1 1 1 1
 0 0 0 1 1 1 1 1 1 1 1 1 1 1 1
 0 0 1 1 1 1 1 1 1 1 1 1 1 1 1
 0 0 1 1 1 1 1 1 1 1 1 1 1 1 1
 0 0 1 1 1 1 1 1 1 1 1 1 1 1 1
 0 1 1 1 1 1 1 1 1 1 1 1 1 1 1
 1 1 1 1 1 1 1 1 1 1 1 1 1 1 1
 1 1 1 1 1 1 1 1 1 1 1 1 1 1 1
 1 1 1 1 1 1 1 1 1 1 1 1 1 1 1
 1 1 1 1 1 1 1 1 1 1 1 1 1 1 1
 1 1 1 1 1 1 1 1 1 1 1 1 1 1 1
Fuel Material Loading Map
 0 0 0 0 0 0 0 0 0 0 3 3 3 3 3
 0 0 0 0 0 0 0 0 0 3 3 1 3 1 3
 0 0 0 0 0 0 3 3 3 3 1 4 1 3 1
 0 0 0 0 0 3 3 1 3 1 4 1 4 2 4
 0 0 0 0 3 3 1 3 2 4 2 4 2 4 2
 0 0 0 3 3 1 3 2 4 2 4 1 4 2 4
 0 0 3 3 1 3 1 4 2 4 2 4 2 4 2
 0 0 3 1 3 2 4 2 4 2 4 1 3 1 3
 0 0 3 3 2 4 2 4 2 4 1 3 1 3 1
 0 3 3 1 4 2 4 2 4 1 3 1 3 1 3
 3 3 1 4 2 4 2 4 1 3 1 3 1 3 1
 3 1 3 2 4 2 4 1 3 1 3 1 3 1 3
 3 3 1 4 2 4 2 3 1 3 1 3 1 3 1
 3 1 3 2 4 2 4 1 3 1 3 1 3 1 3
 3 3 1 4 2 4 2 3 1 3 1 3 1 3 1
Blade Positions
 -1 -1 -1 -1 -1 48 00 48
 -1 -1 -1 00 00 00 00 00
 -1 -1 00 48 00 48 00 48
```

```
 -1 00 00 00 00 00 00 00
 -1 48 00 48 00 48 00 48
 00 00 00 00 00 00 00 00
 00 48 00 48 00 48 00 48
 00 00 00 00 00 00 00 00
Lattice Geometry Indices
 1 24*1
Lattice Material Indicies
 1 1 7*2 10*3 5*2 1
 2 4 7*5 10*6 5*5 4
 3 7 22*8 7
 4 9 22*10 9
Lattice Geometry Datasets
ge7x7.dat
Lattice Material Datasets
G7212G003DL1.dat
G7212G006DL2.dat
G7212G007DL3.dat
G7211G003DL4.dat
G7211G006DL5.dat
G7211G007DL6.dat
G7212G003DL7.dat
G7212G006DL8.dat
G7211G003DL9.dat
G7212G006DL10.dat
Fuel Assembly Spacers for each Bundle Type
7
Locations of Spacer for Each Bundle Type
46.99 96.52 146.05 195.58 245.11 294.64 344.17
Spacer Material Mnemonics
SG7D1
```

3.3. Detailed Algorithms

The coding that comprises the software routine is described in this sub-section by functional block. Listings of the FORTRAN coding are provided in Attachment XIV.

3.3.1. Driver Routine

The driver routine manages the overall processing performed by the software routine and is well represented by the flowchart in Figure 3-1. It is comprised of the main function ("main").

3.3.2. Service Routines

These are routines that provide memory management, file management, control of overall output processing, and miscellaneous services. These routines are listed in Table 3-2. Memory management in this software routine is achieved by utilizing the dynamic memory allocation functions of the C libraries. Structured variables used in the software routine, and particularly in the construction of linked lists, are shown in Table 3-3.

In a linked list, the memory address of the next structure is part of the existing structure; therefore, if the base member of the linked list is known, then the list may be traversed in the forward direction. In the linked lists in BLINK, the memory address of the previous member of the list is included in the structure, permitted the list also to be traversed in the backward direction. This is illustrated in Figure 3-3. The use of linked lists of structures permits the use of dynamic memory without a priori knowledge of the number of entries in the list.

Figure 3-3 Illustration of Linked List Concept

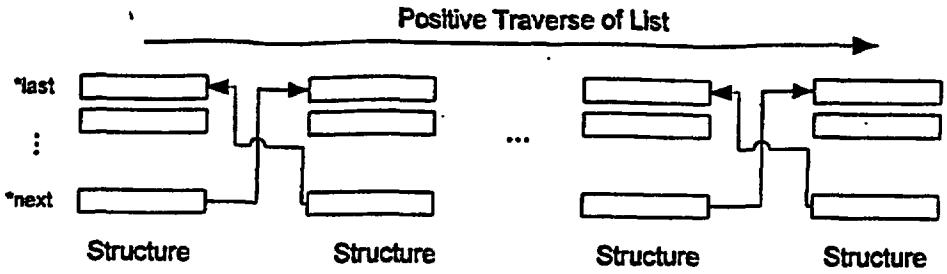

Table 3-2 Service Routine List

Name [a]	Function
abort (c)	Common Location for Controlled Termination of Processing when Error Detected by Coding
bufferpad (c)	Adds Blanks to a C Character String
copy_ascii_file (c)	Copies the Contents of One ASCII File to Another
discard_scratch_file (c)	Creates Sub-process to Delete Scratch File used in Processing
fortran_message (c)	C Function to Print Message from FORTRAN Routines to the Output Stream
FTCLOSE (f)	Manages the Closing of FORTRAN Sequential Text Files
FTOPEN (f)	Manages the Opening of FORTRAN Sequential Text Files
header (c)	Prints Header for New Output Page; also Obtains Process Information (i.e., Date, Time and Process Identification Number for Case Identification)
INVALI (f)	Initializes an Integer Vector to a Given Value
INVALR (f)	Initializes a Real Vector to a Given Value
lines (c)	Tracks the Number of Output Lines on a Page and Requests a New Page when Current Page is Full
load_core_mtls (c)	Loads the Contents of the Core Materials Dataset into Memory
load_fuel_material (c)	Loads the Contents of a Intermediate Fuel Material Dataset in Memory
load_surface_usage_list (c)	Loads Entries into "surface_usage_list" Structure in Linked List
load_usage_list (c)	Loads Entries into "usage_list" Structure in Linked List
MCHAR (f)	Determines the Last Non-blank Character in a Character String
memory_ascii_record (c)	Manages Memory Requests for Variables of the "ascii_record" Type (see Table 3-3 for Definition)
memory_ascii_string (c)	Manages Memory Requests for Variables of the "ascii_string" Type (viz., char[133])
memory_fg_list (c)	Manages Memory Requests for Variables of the "fg_list" Type (see Table 3-3 for Definition)
memory_float (c)	Manages Memory Requests for Single-precision Real Variables
memory_integer (c)	Manages Memory Requests for Integer Variables
memory_lattice_list (c)	Manages Memory Requests for Variables of the "augmented_lattice_list" Type (see Table 3-3 for Definition)
memory_s_material (c)	Manages Memory Requests for Variables of the "ll_material" Type (see Table 3-3 for Definition)
memory_surface_usage_list (c)	Manages Memory Requests for Variables of the "surface_usage_list" Type (see Table 3-3 for Definition)
memory_usage_list (c)	Manages Memory Requests for Variables of the "usage_list" Type (see Table 3-3 for Definition)
memsum (c)	Summarizes Software Routine Dynamic Memory Usage
rollup_llm (c)	Returns Memory Associated with a "ll_material" Linked List
search_surface_usage_list (c)	Searches Linked Lists of the "surface_usage_list" Type either by Index or Label
search_usage_list (c)	Searches Linked Lists of the "usage_list" Type either by Index or Label

[a]. The character in parentheses represents the computer language in which the routine is created. A lower case "c" represents C source statements while a lower case "f" represents FORTRAN source statements. The name of FORTRAN source routines are also given in all uppercase letters.

Table 3-3 Type Description for Structured Variables

Type Name	Definition	Comments
ascii_string	char[133]	character string variable used to process text from ASCII files
ascii_record	ascii_record *last ascii_string ascii_record *next	linked list structure used to load the contents of ASCII files into memory
ll_material	ll_material *last int atomic_number int mass_number float weight_percentage char library_suffix[5] ll_material *next	linked list structure used to load the material definitions into memory for processing
usage_list	usage_list *last int index ascii_string label usage_list *next	linked list structure used to track the usage of material definitions
surface_usage_list	usage_list *last int index ascii_string label ascii_string value char mnemonic[4] ascii_string equivalent_label usage_list *next	linked list structure used to track the usage of surface definitions
fg_list	ascii_string gds_name int latdim int nwr float cthick float asin float wgap float ngap float cradius float fsrd float cfsrd float rpitch float cod float cld float pod char frcmat[6] char fcmat[6]	structure used to hold the constants defining a lattice geometry
all	all *last int basis_lattice_material_index int lattice_material_index all *next	linked list structure used to accumulate list of lattices that must be replicated due to the presence of a fuel grid spacer

3.3.3. Input Processing

These routines control the processing of input data to the software routine. Thus, they process the input variables shown in Table 3-1. This functions are listed in Table 3-4 and the flow of the input process is shown in Figure 3-4.

Table 3-4 List of Input Routines

Name [a]	Function
BPCHEK (f)	Ensures that Control Blade Indices are in Valid Locations and all Positions are in a Valid Range
CBUNDLE (f)	Computes the Number of Unique Fuel Assembly Types
CLATTICE (f)	Determines the Number of Unique Fuel Lattices in the Core
echo (c)	Copies an Image of the Input File to the Output Stream
LDLV (f)	Reads Vectors of Integers and an Associated Title Line
LDLVR (f)	Reads Vectors of Real Values and an Associated Title Line
LODCT (f)	Creates Correspondence Table between Lattice Geometry Indices and Lattice Material Indices
MAPCHEK (f)	Ensures that Fuel Assembly Indices are in Valid Locations and all Valid Locations are Filled
R2DMAP (f)	Reads Rectangular Arrays of Integer Variables
RBLADE (f)	Reads the Contents of the Control Blade Geometry Dataset
READIN (f)	Manages the Reading of Input Files
RLATTICE (f)	Reads the Contents of the Lattice Geometry Dataset
STRNGR (f)	Reads Character Strings from FORTRAN Logical Unit

[a]. The character in parentheses represents the computer language in which the routine is coded. A lower case "c" represents C source statements while a lower case "f" represents FORTRAN source statements. The name of FORTRAN source routines are also given in all uppercase letters.

Figure 3-4 Flowchart for Input Processing

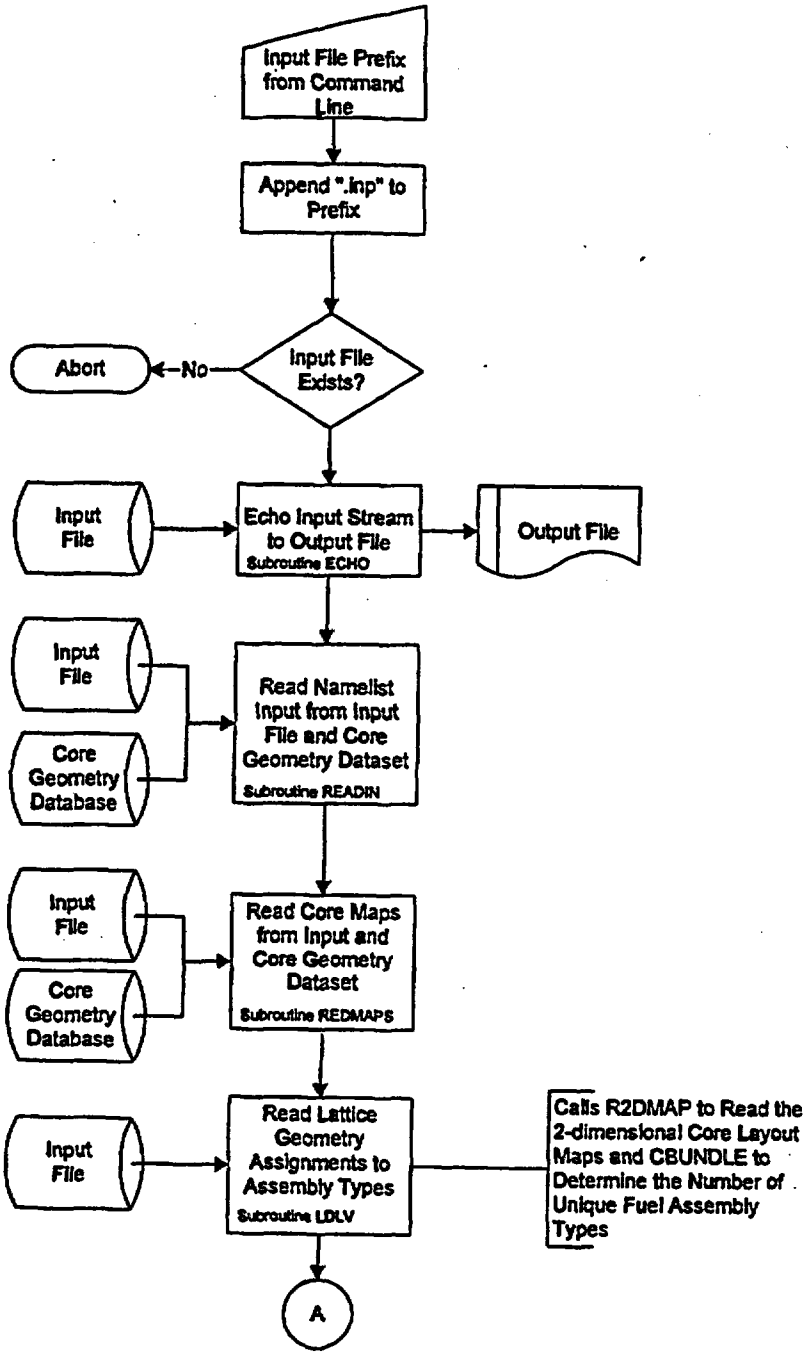

Figure 3-4 (cont'd)

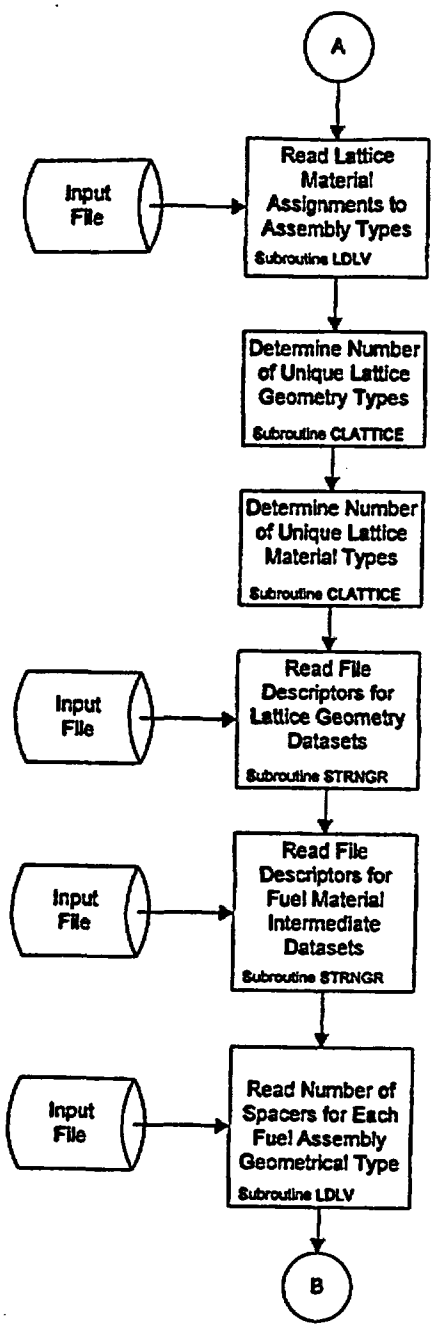

Figure 3-4 (cont'd)

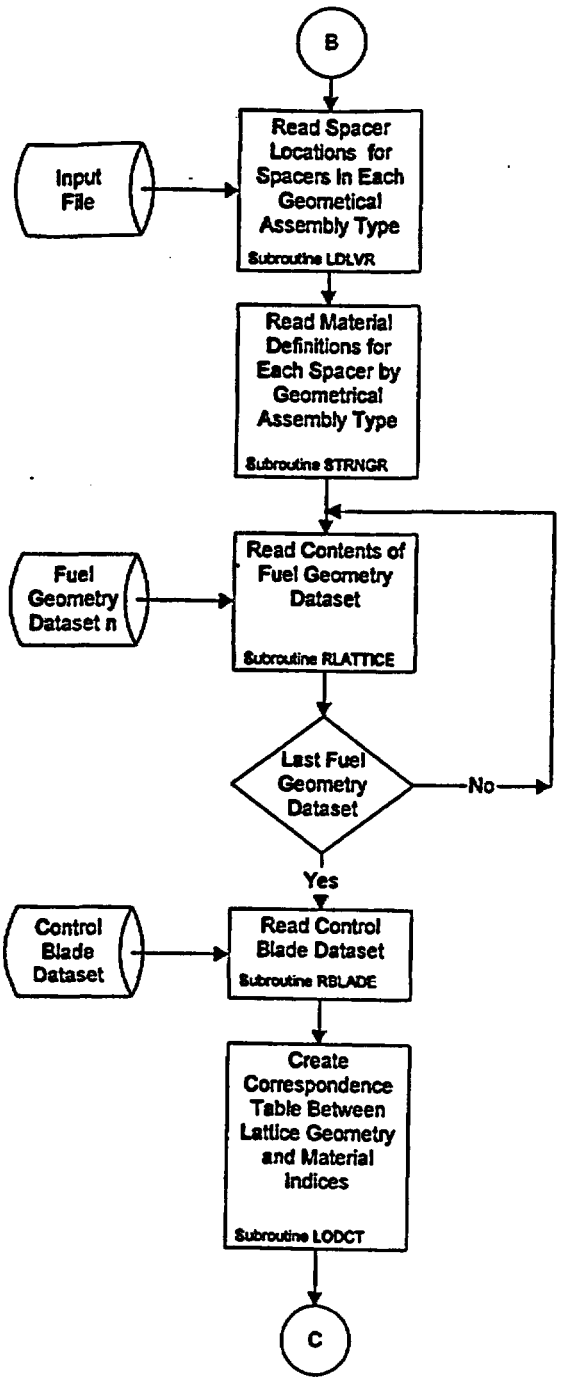

Figure 3-4 (cont'd)

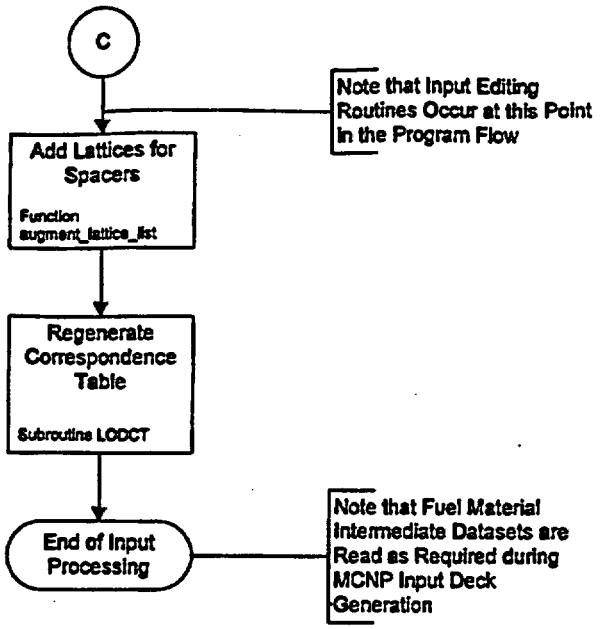

3.3.4. Input Editing Routines

These routines edit the user input to the software routine and the contents of many of the datasets selected for the creation of the MCNP input deck. These routines are listed in Table 3-5 and the flow of the input editing process is shown in Figure 3-5.

Table 3-5 Input Editing Routine List

Name [a]	Function
editin (c)	Edits Input from User Input Directives from FORTRAN NAMELIST Input
coredb_edt (c)	Edits Contents of Core Geometry Dataset
bladedb_edt (c)	Edits Contents of Blade Geometry Dataset
fgds_edt (c)	Edits Contents of Fuel Geometry Datasets
edit_ct (c)	Edits Correspondence Table which Relates Lattice Geometry Indices and Lattice Material Indices
edit_spacer (c)	Edits Input Variables Defining Fuel Assembly Spacers

[a]. The character in parentheses represents the computer language in which the routine is coded. A lower case "c" represents C source statements while a lower case "f" represents FORTRAN source statements. The name of FORTRAN source routines are also given in all uppercase letters.

Figure 3-5 Input Editing Flowchart

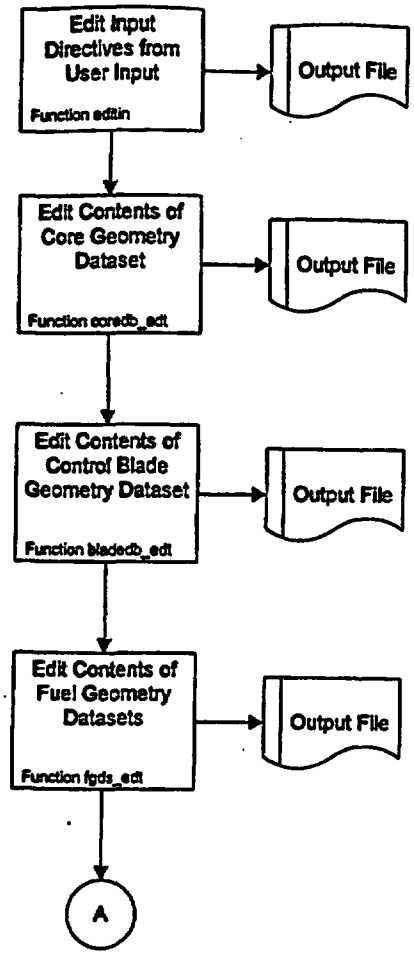

Figure 3-5 (cont'd)

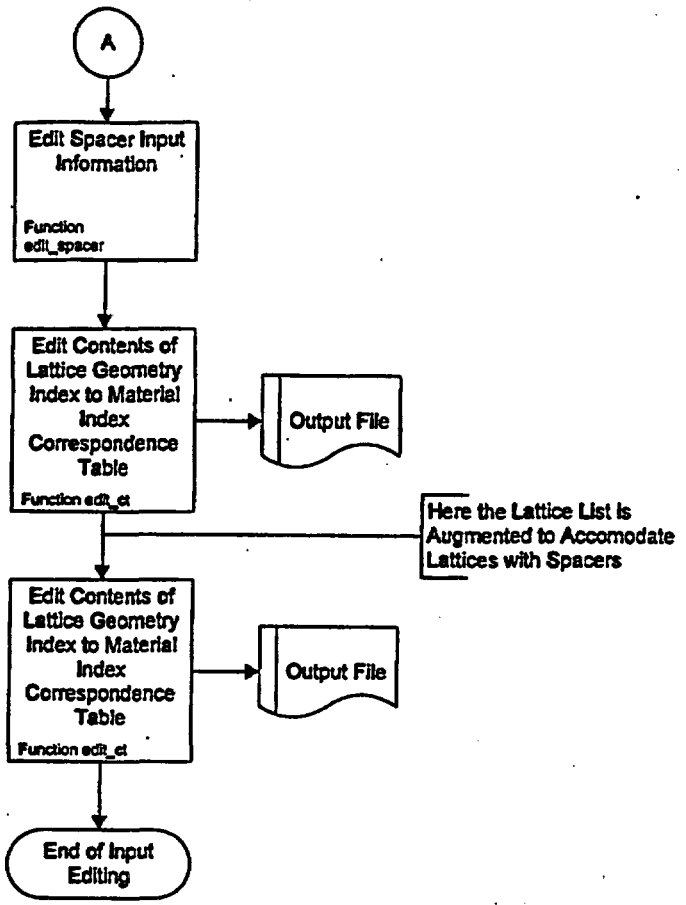

3.3.5. MCNP Input Deck Generation

The MCNP model for a BWR core is created from the smallest set of unique components for which differentiated nuclear data is available: lattices filling a "node" of the core. Thus separate MCNP universes are built for each unique lattice. These lattices are then built up into unique fuel assembly models that are merely strings of such nodes. The next higher grouping of components in the core is "control cells," which are groups of four fuel assemblies, the control blade location at the center, and, possibly, one or more in-core instrumentation guide tube at the corner of the control cell. These unique control cells are then loaded into the core region of the model to complete the fuel mass. This process is illustrated in Figure 3-6.

Figure 3-6 Building of Core Model from Unique Components

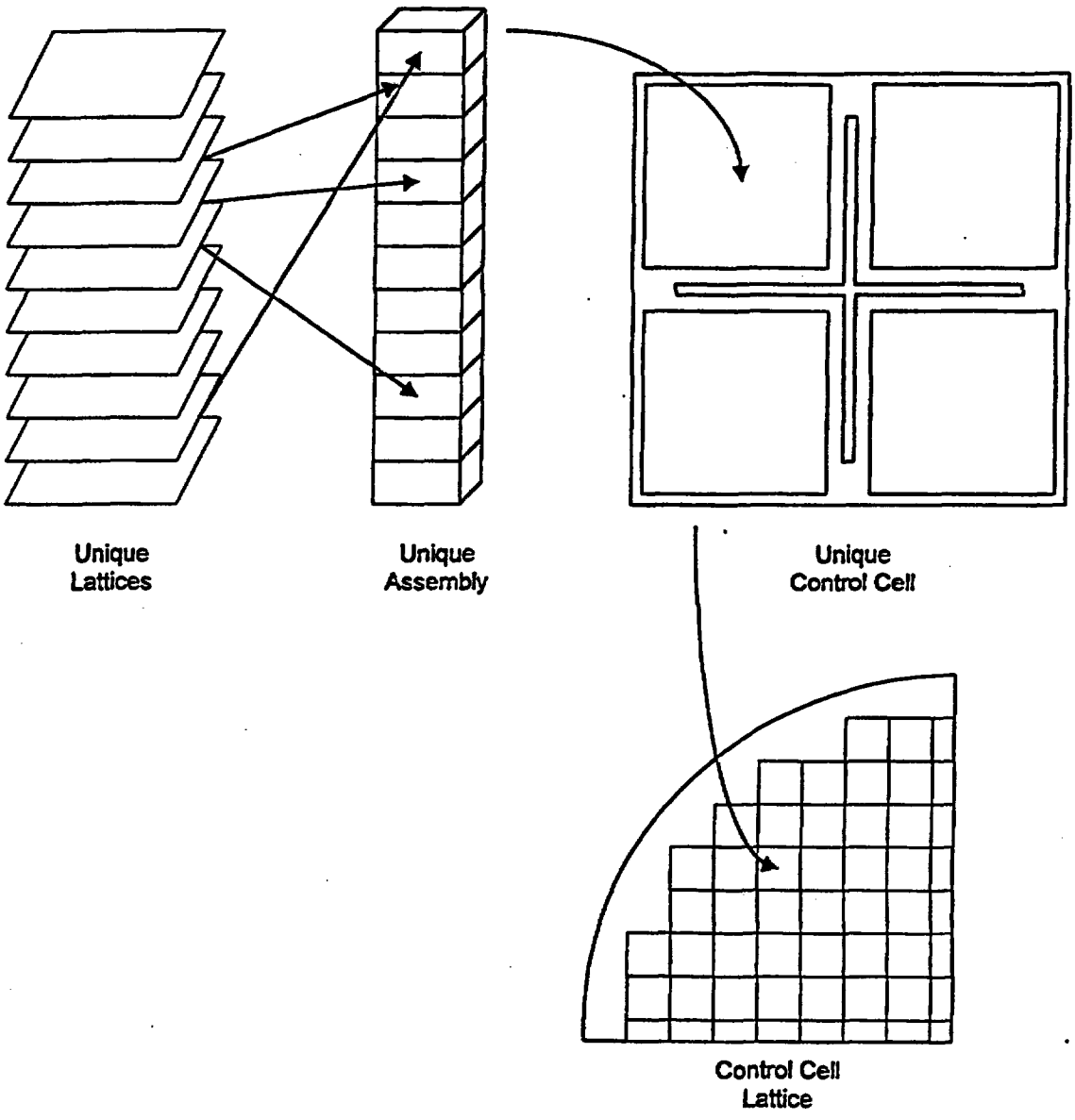

The details of the construction of the MCNP model for specific lattices are shown in other attachments and the building of the assemblies is straightforward. Each assembly is placed in a specially prepared "cell" in each control cell as shown in Figure 3-7. While the fuel assembly is roughly square in cross section, this "window" has been adjusted to provide clearance for in-core instrumentation guide tubes which may be present in the corner of the control cell. The coordinate of the center of this curved surface and the ambiguity planes are computed as:

Eq. 3-1 $$\delta = -\delta_0 + \frac{\sqrt{2}}{2} \cdot \left(\frac{\mathrm{DTOD}}{2} + \delta_0 \right)$$

Here DTOD is the outer diameter of the guide tube and δ_0 is sum of the clearance between the guide tube outer surface and the window for the fuel assembly model. The radius of the curved surface may be computed as:

Eq. 3-2 $$\mathrm{R} = \sqrt{2} \cdot \delta \cdot tan(67.5^\circ)$$

The coordinates of the center of the curved surface may be written as:

Eq. 3-3 $$\begin{aligned} x_c &= (\mathrm{APITCH} - \delta_0) - \mathrm{R} \\ y_c &= (\mathrm{APITCH} - \delta_0) + \mathrm{R} \end{aligned}$$

Here APITCH is the lattice pitch.

There is also a "window" constructed for the control blade as shown in Figure 3-8. The location of blade window is defined by a fixed offset from the center of the control cell that accommodates both the control blade and the fuel assembly. The fuel assemblies are loaded into the windows and distributed in the control cell as shown in Figure 3-9. The reference location for the fuel assembly window is in the southeast quadrant and assemblies at other locations are placed by rotating the defined cell–about the center of the control cell–to the proper location.

Figure 3-7 "Window" for Fuel Assembly in Control Cell

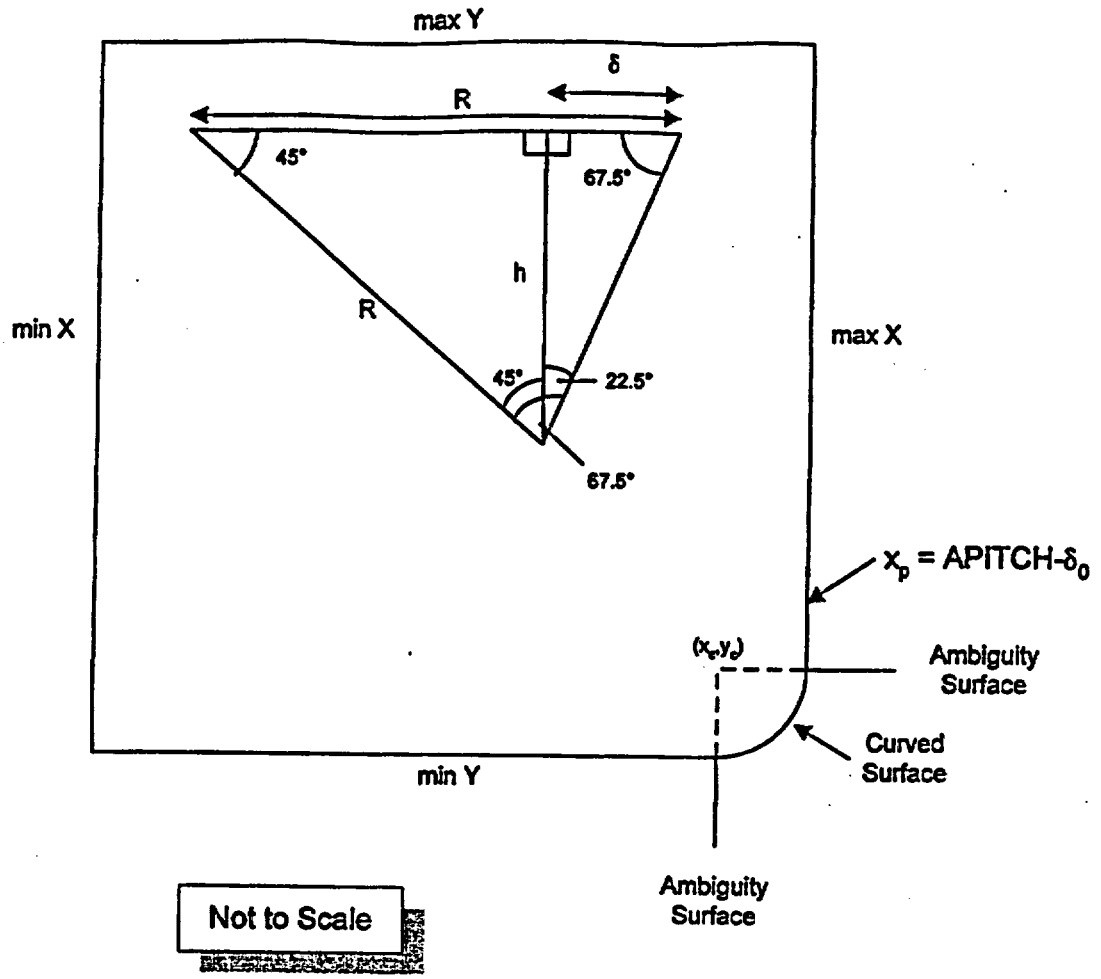

Figure 3-8 Window in Control Cell Model for Control Blade

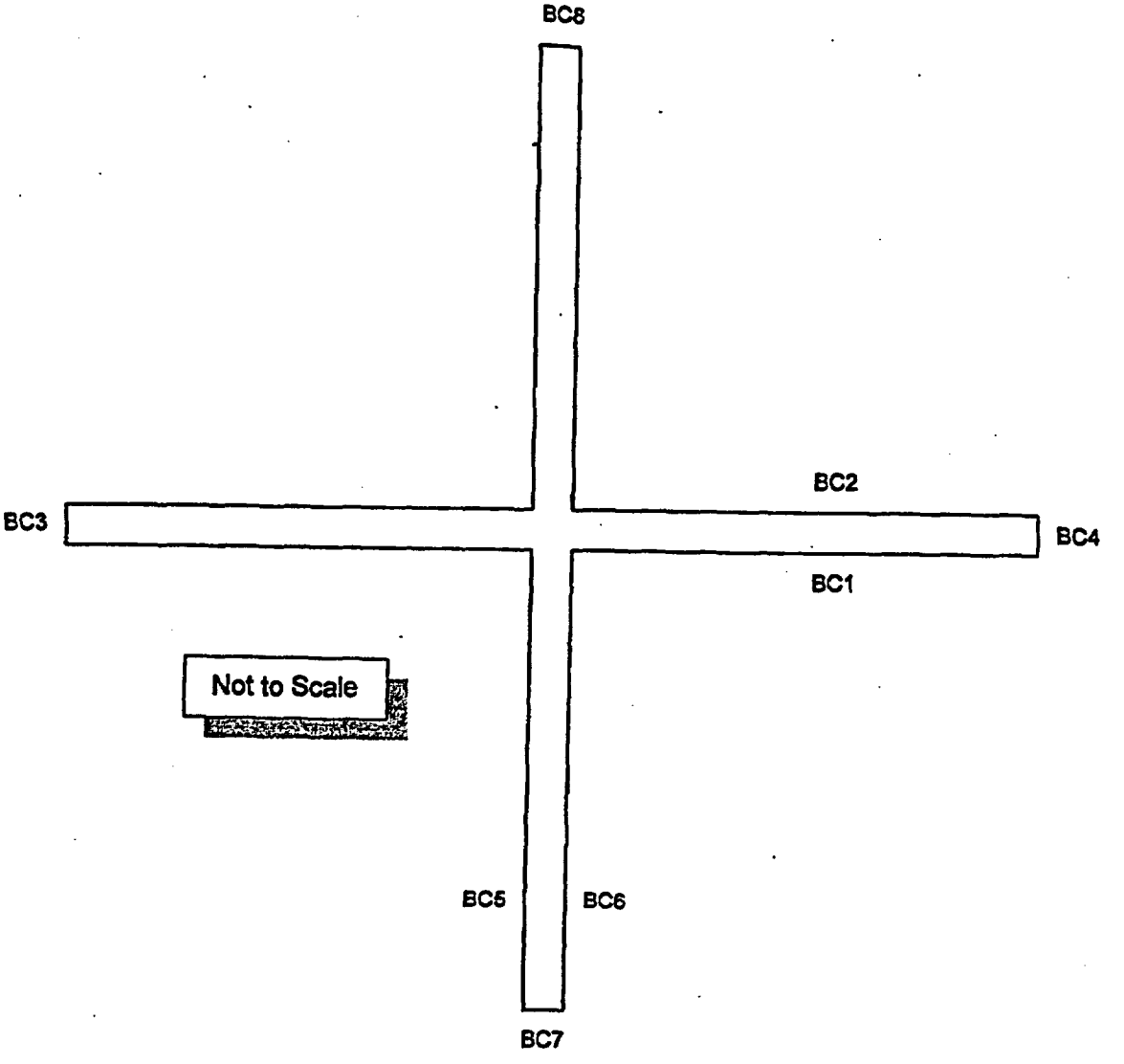

Figure 3-9 Assembly Loading into Control Cell

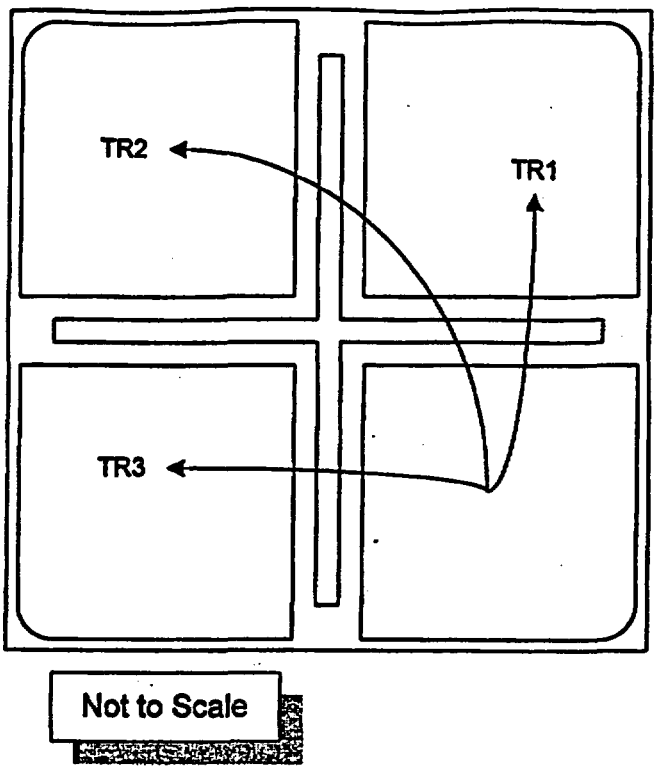

These routines perform the primary function of the software routine, viz., governing the production of the MCNP input deck. These names and function of these routines are listed in Table 3-6 and the logic flow for this portion of the software routine is shown in Figure 3-10.

Table 3-6 Deck Generation Routine Listing

Name [a]	Function
add_cell (c)	Adds Cell Definition to MCNP Model
add_like_but (c)	Adds Cell of Form "Like But" to MCNP Model
add_material (c)	Adds Material Definition to MCNP Model
add_surface (c)	Adds Surface Definition to MCNP Model
add_symmetry_surfaces (c)	Adds Symmetry Surfaces to MCNP Model
augment_lattice_list (c)	Adds Lattices Incorporating Spacer Grids into Material Lattice Loading Vectors
build_assemblies (c)	Combines Unique Lattices Type into Unique Assembly Types
build_control_blade (c)	Creates Cells, Surfaces and Material Definitions for Control Blade
build_control_cells (c)	Creates Control Cells and Loads Fuel Assembly Models as Appropriate
CCMGEN (f)	Determines the Location and Number of Unique Control Cells
core_lattice_generation (c)	Creates Control Cell Lattice within Core Shroud
echo_MCNP_deck (c)	Copies the MCNP Input File to the Output Stream
edit_materials (c)	Edits the Descriptions of Materials used in the Problem
edit_surfaces (c)	Edits the Descriptions of Surfaces used in the Problem
edit_universes (c)	Edits the Universe Indices for the Control Cells and Fuel Assemblies
ge7x7_lattice (c)	Creates Cells, Surfaces and Material Definitions for Model of GE 7x7 Lattice (No Water Rods)
ge8x8_lattice_swr (c)	Creates Cells, Surfaces and Material Definitions for Model of GE 8x8 Lattice with Small Water Rods
generate_deck (c)	Combines Scratch Files containing Segments of MCNP Input Instructions into a Single MCNP Input File
generate_lattice_model (c)	Controls the Generation of the Appropriate Lattice Representation for each Unique Lattice in the Core [b]
material_match (c)	Matches Material Identifiers with Materials in the Linked List for Core Materials
search_fau_list (c)	Search List of Fuel Assembly Assignments to Control Cells and Returns Fuel Assembly Indices at Desired Locations
source_specification (c)	Adds Source Specification and Other Problem Control to the MCNP Input
spacer_location (c)	Determines the Nodal Locations of Each Fuel Spacer Grid
vessel_generation (c)	Creates Cells, Surfaces and Material Definitions for Vessel, Vessel Internals and Axial Reflector Regions

[a]. The character in parentheses represents the computer language in which the routine is coded. A lower case "c" represents C source statements while a lower case "f" represents FORTRAN source statements. The name of FORTRAN source routines are also given in all uppercase letters.

[b]. This function calls other functions that create the appropriate cells, surfaces and material definitions for each lattice geometrical type. The models for these various lattice types are documented in individual attachments to the main document (see §9).

Figure 3-10 Deck Generation Flowchart

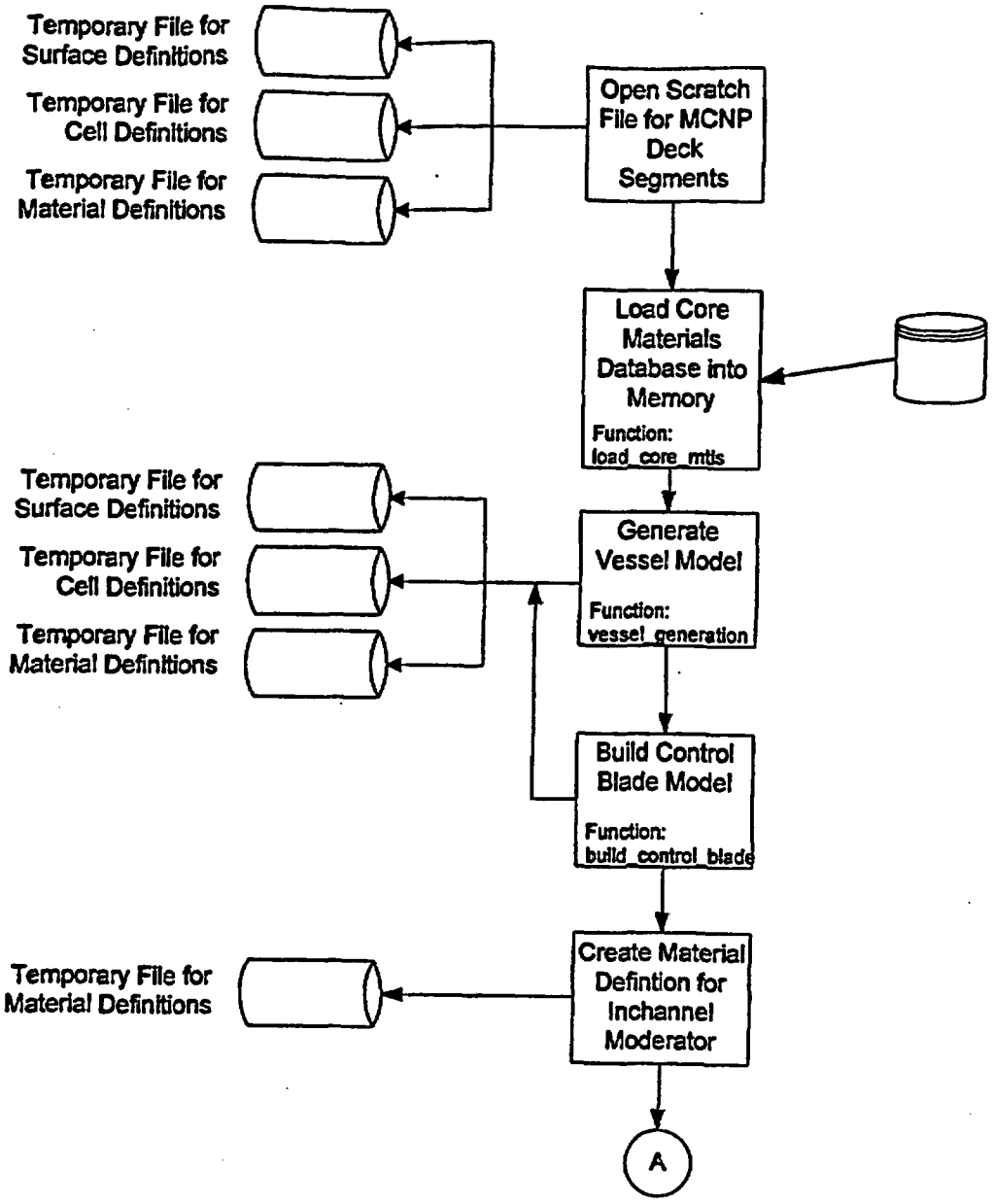

Figure 3-10 (cont'd)

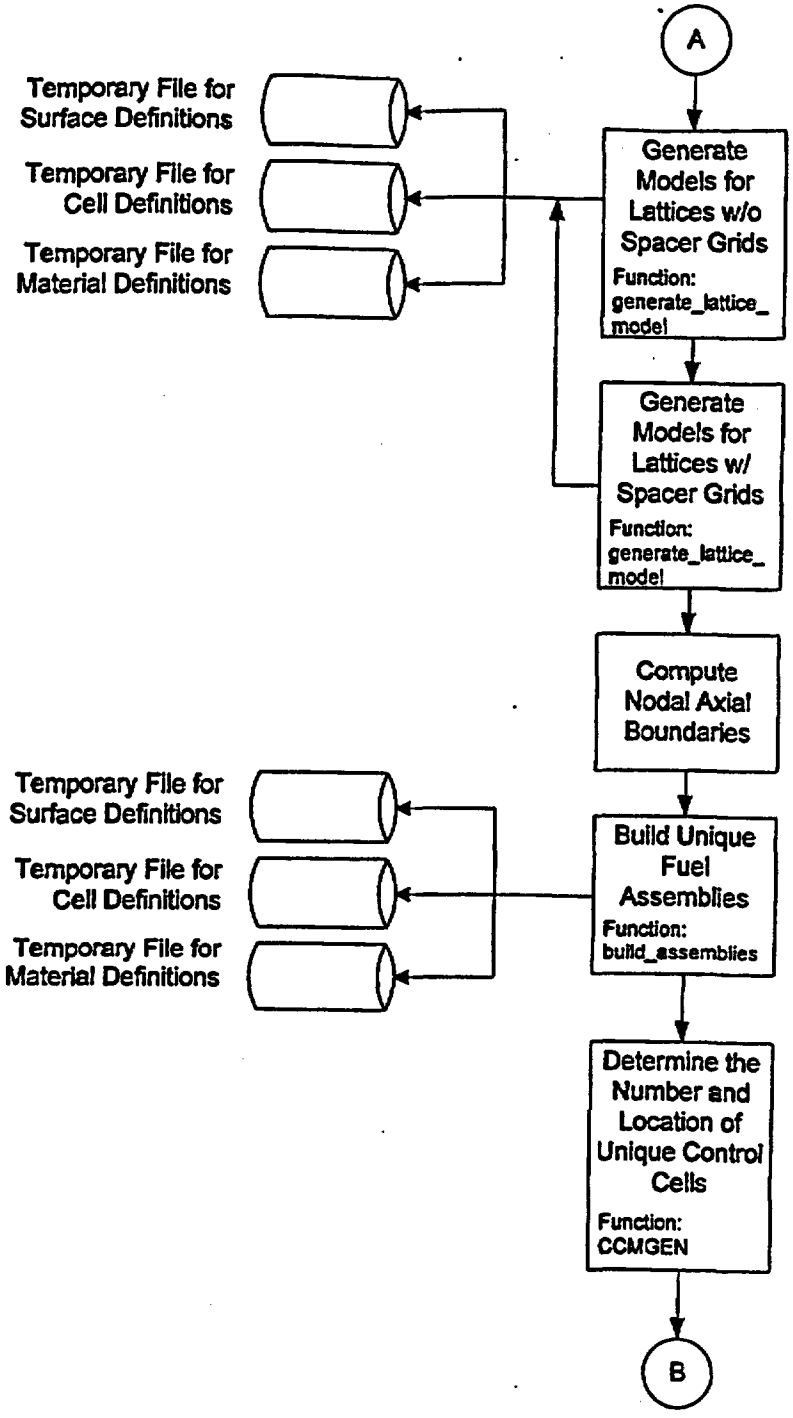

Figure 3-10 (cont'd)

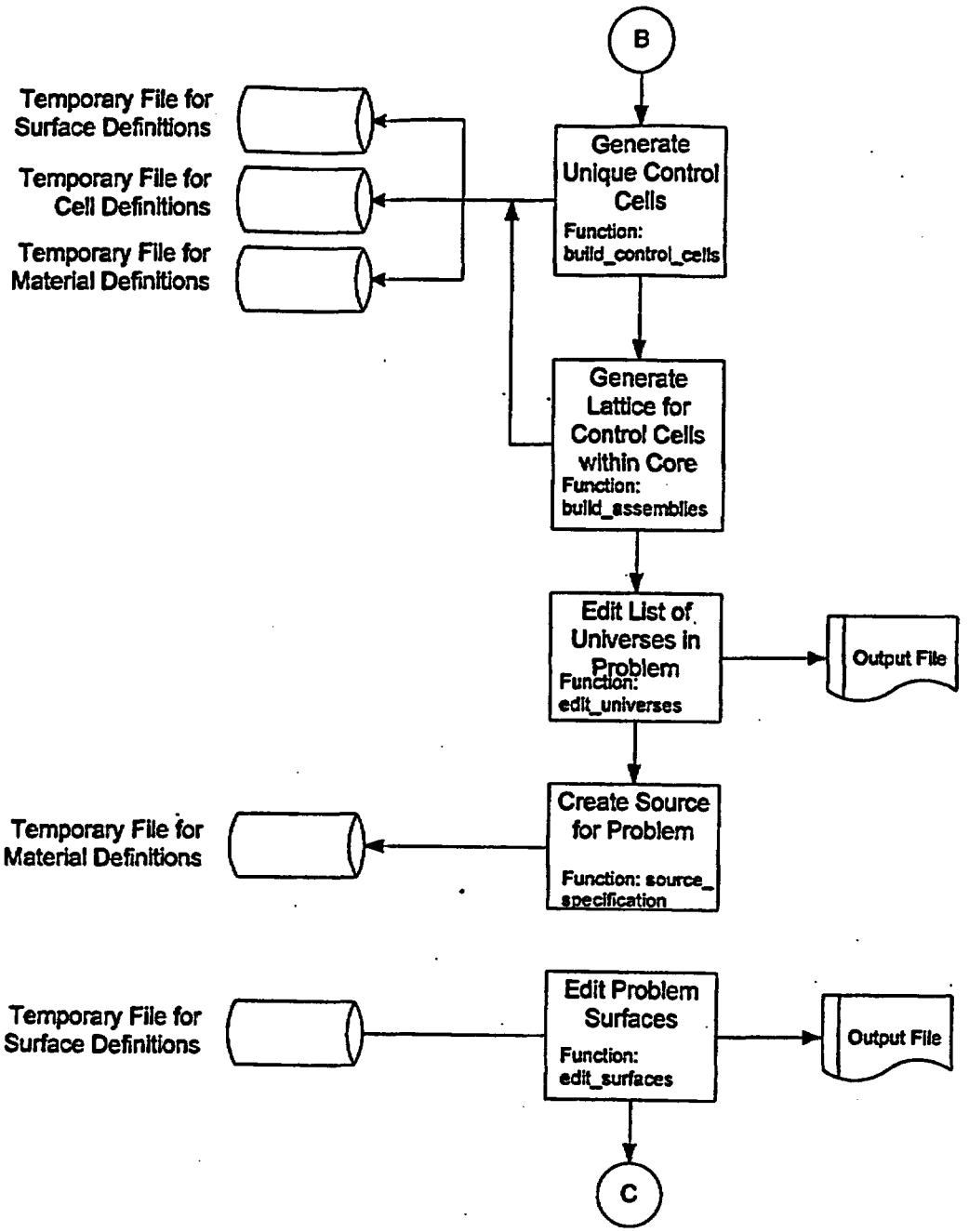

Figure 3-10 (cont'd)

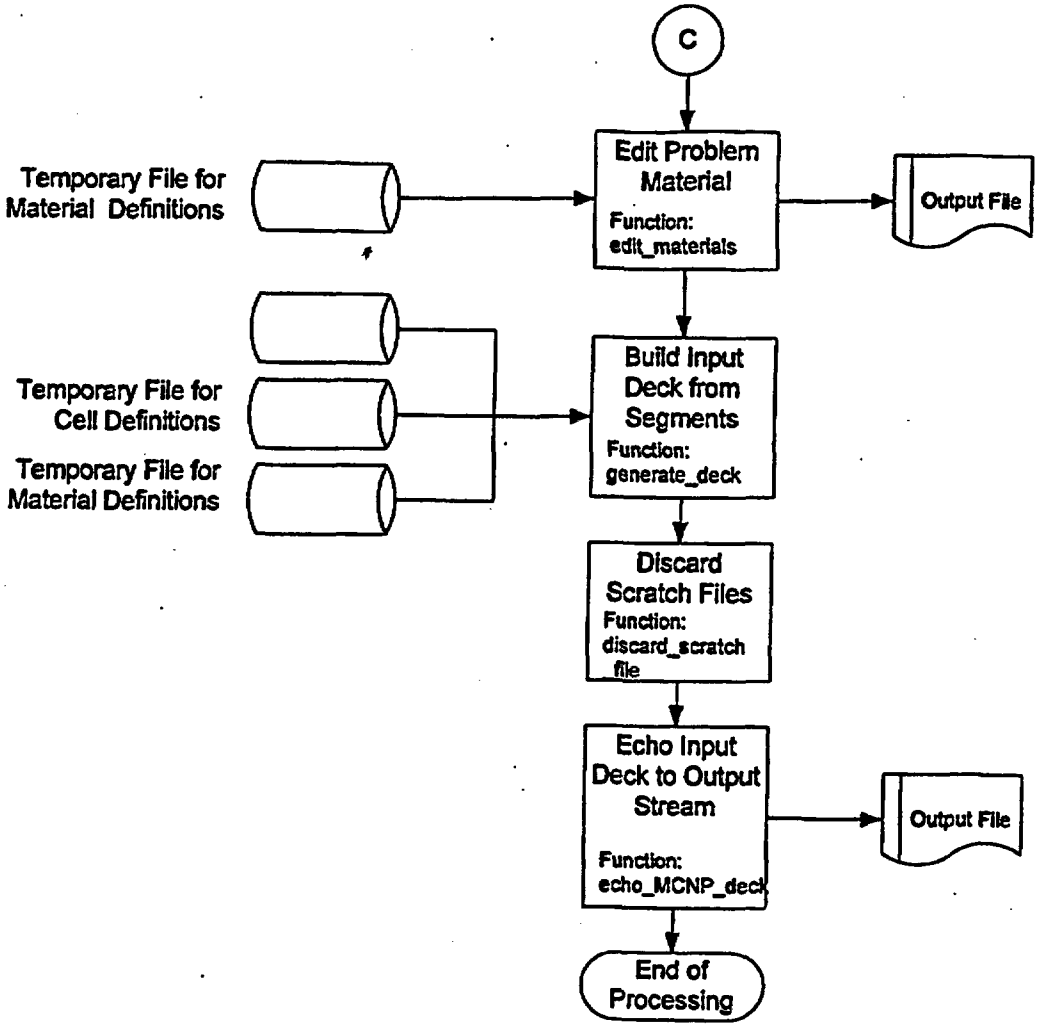

4. Testing

The MCNP model for a quarter core contains many components, the modeling of which is verified in the attachments which document the specific components. The testing in this section of this attachment seeks only to show that the vessel and core internals models, including the control cells, are appropriately constructed. For this testing, the MCNP input deck generated for the Quad Cities Unit 1 Beginning of Life CRC calculation is used (see Attachment XII).

The input parameters used to generated the model are shown in Table 4-1. These values are used to create the surfaces shown in Table 4-2 and the cell definitions given in Table 4-3 (note that the cell indices merely provide the ordering of the cells and do not correspond to any particular input to BAFL). These may be compared with the input deck shown in Attachment XII to confirm that the linkage automation is creating the expected values.

Table 4-1 Input Values used to Create Vessel and Core Internals Models

		Reference			
Mnemonic	Definition	Value	Units	Source	Name
ncol	Dimensionality of Core	30	n/a	[a]	n/a
nrow	Dimensionality of Core	30	n/a	[a]	n/a
apitch	Assembly Pitch	6	inches	[b]	APITCH
vod	Vessel Outer Diameter	668.654	cm	[c]	VOD
vthick	Vessel Thickness	15.557	cm	[c]	VTHICK
sod	Core Shroud Outer Diameter	526.096	cm	[c]	SOD
sthick	Core Shroud Thickness	5.08	cm	[c]	STHICK
n/a	Assembly Length (Handle to Nosepiece)	171.27	inches	[d]	ATLEN
n/a	Nosepiece Guide	1.45	inches	[d]	LNPG
n/a	Nosepiece Cylinder	0.625	inches	[d]	LNPCYL
n/a	Lower Tie Plate	5.31	inches	[d]	LLTP
n/a	Active Fuel Length	144	inches	[d]	AFL
n/a	Handle Length	6.65	inches	[d]	LHANDLE
tutpr	Top of Upper Tie Plate Region	n/a	n/a	n/a	TUTPR
tcgr	Top of Core Grid Region	158.6875	inches	[e]	TCGR
bltpr	Bottom of Lower Tie Plate Region	n/a	n/a	n/a	n/a
n/a	Core Support Plate Thickness	2	inches	[e]	CSPTH
bcpr	Bottom of Fuel Support/Core Plate Region	n/a	n/a	n/a	n/a
dtod	Instrument Dry Tube Outer Diameter	0.700	inches	[f]	DTOD
	Dry Tube Thickness	0.03	inches	[f]	DTD
dtid	Instrument Dry Tube Inner Diameter	1.63	inches	n/a	DTID
d0	Offset between Instrument Tube and Window for Fuel Assembly	0.1	cm	[g]	D0
	Corner Radius for Window for Fuel Assembly	n/a	n/a	n/a	CR
	Blade Window Offset	0.4	cm	[g]	BWO
	Control Blade Span	4.875	inches	[h]	CBSPAN

[a]. This value is from Reference 6.6 (hereafter cited as the "EPRI Report"), Table 15.
[b]. This value is from the EPRI Report, Table 3.
[c]. This value is from Reference 6.7 (hereafter cited as "QC1 BOL Report"), Table 4.1-1.
[d]. This value is from Reference the EPRI Report, Figure 10.
[e]. This value is from Reference the EPRI Report, Figure 26.
[f]. This value is from Reference the EPRI Report, Figure 29.
[g]. This is an assumed value which provides adequate cell clearance in the MCNP model.
[h]. This value is from Reference the EPRI Report, Figure 13.

Table 4-2 Surface Definitions for Vessel and Core Internals Models

Index	Symbol	Definition	Mnemonic	Parameters	Justification/Computation
1	STP	Top of Problem	pz	4.3307E+02	= 2.54*TCGR+30.0
2	SBP	Bottom of Problem	pz	-4.8567E+01	= -2.54*(LLTP+CSPTH)-30.0
3	SMREP	Maximum Radial Extent of Problem	cz	3.3433E+02	= VOD/2
4	SXZP	X-Z Plane	py	0.0000E+00	Symmetry Line
5	SYZP	Y-Z Plane	px	0.0000E+00	Symmetry Line
6	SIRSV	Inner Radial Surface of Vessel	cz	3.1877E+02	= (VOD-2*VTHICK)/2
7	SORSCS	Outer Radial Surface of Core Shroud	cz	2.6305E+02	= SOD/2
8	SIRSCS	Inner Radial Surface of Core Shroud	cz	2.5797E+02	= (SOD-2*STHICK)/2
9	STAF	Top of Active Fuel	pz	3.6576E+02	From Quad Cities Unit 1 Input Deck
10	STUTPR	Top of Upper Tie Plate Region	pz	3.9938E+02	= TUTPR
11	STCGR	Top of Core Grid Region	pz	4.0307E+02	= 2.54*TCGR
12	SBAF	Bottom of Active Fuel	pz	0.0000E+00	Datum for Model
13	SBLTPR	Bottom of Lower Tie Plate Region	pz	-1.3487E+01	= -2.54*LLTP
14	SBCPR	Bottom of Fuel Support/Core Plate Region	pz	-1.8567E+01	= -2.54*(LLTP+CSPTH)
15	STFN	Top of Fuel Nodes	pz	1.5240E+01	= STAF/24 (Number of Axial Nodes from
			pz	3.0480E+01	Quad Cities Unit 1 Input Deck)
			pz	4.5720E+01	
			pz	6.0960E+01	
			pz	7.6200E+01	
			pz	9.1440E+01	
			pz	1.0668E+02	
			pz	1.2192E+02	
			pz	1.3716E+02	
			pz	1.5240E+02	
			pz	1.6764E+02	
			pz	1.8288E+02	
			pz	1.9812E+02	
			pz	2.1336E+02	
			pz	2.2860E+02	
			pz	2.4384E+02	
			pz	2.5908E+02	
			pz	2.7432E+02	
			pz	2.8956E+02	
			pz	3.0480E+02	
			pz	3.2004E+02	
			pz	3.3528E+02	
			pz	3.5052E+02	
90	SFAWMXX	Window for Fuel Assembly (max X)	px	1.5140E+01	= (2.54*APITCH)-0.1
91	SFAWMNX	Window for Fuel Assembly (min X)	px	5.0000E-01	Assumed Offset for Blade Window + 0.10
92	SFAWMXY	Window for Fuel Assembly (max Y)	py	1.5140E+01	= (2.54*APITCH)-0.1
93	SFAWMNY	Window for Fuel Assembly (min Y)	py	5.0000E-01	Assumed Offset for Blade Window + 0.10
94	SCSFAW	Curved Surface for Fuel Assembly Window	c/z	1.3094E+01	= 2.54*APITCH-D0-CR
				-1.3094E+01	= -(2.54*APITCH-D0)-CR
				2.0462E+00	= CR
95	SASFAW1	Ambiguity Surface for Fuel Assembly Window	py	-1.3094E+01	= -(2.54*APITCH-D0)-CR
96	SASFAW2	Ambiguity Surface for Fuel Assembly Window	px	1.3094E+01	= 2.54*APITCH-D0-CR
97	SBC1	Surface 1 for Blade Cutout	py	-4.0000E-01	Assumed Offset for Blade Window
98	SBC2	Surface 2 for Blade Cutout	py	4.0000E-01	Assumed Offset for Blade Window

Index	Symbol	Definition	Mnemonic	Parameters	Justification/Computation
99	SBC3	Surface 3 for Blade Cutout	px	-1.2483E+01	= -(2.54*CBSPAN+0.1)
100	SBC4	Surface 4 for Blade Cutout	px	1.2483E+01	= 2.54*CBSPAN+0.1
101	SBC5	Surface 5 for Blade Cutout	px	-4.0000E-01	Assumed Offset for Blade Window
102	SBC6	Surface 2 for Blade Cutout	px	4.0000E-01	Assumed Offset for Blade Window
103	SBC7	Surface 7 for Blade Cutout	py	-1.2483E+01	= -(2.54*CBSPAN+0.1)
104	SBC8	Surface 8 for Blade Cutout	px	1.2483E+01	= 2.54*CBSPAN+0.1
105	SOSGT	Outer Surface of Guide Tube	c/z	1.5240E+01	= 2.54*APITCH
				-1.5240E+01	= -2.54*APITCH
				1.7780E+00	= 2.54*DTOD
106	SISGT	Inner Surface of Guide Tube	c/z	1.5240E+01	= 2.54*APITCH
				-1.5240E+01	= -2.54*APITCH
				1.6256E+00	= 2.54*(DTOD-2*DTD)
107	SECCMXX	Edge of Control Cell (max X)	px	1.5240E+01	= 2.54*APITCH
108	SECCMNX	Edge of Control Cell (min X)	px	-1.5240E+01	= -2.54*APITCH
109	SECCMXY	Edge of Control Cell (max Y)	px	1.5240E+01	= 2.54*APITCH
110	SECCMNY	Edge of Control Cell (min Y)	px	-1.5240E+01	= -2.54*APITCH

Table 4-3 Cell Definitions for Vessel and Core Internals Models

Cell Index	Definition	Material Index	Universe	Surfaces: Surface Index	Surfaces: Mnemonic	Surfaces: Notes [reference as appropriate]	Cell Definition
2000	Pressure Vessel	1	0	-1	pz	Material 1 is SS304	-1 2 -3 4 -5 6
				2	pz		
				-3	cz		
				4	py		
				-5	px		
				6	cz		
2001	Outside World	0	0	3	cz		(3 : 1 : -2 : -4 : 5)
				1	pz		
				-2	pz		
				-4	py		
				5	px		
2002	Jet Pump Region	2	0	-6	cz	Material 2 is Bypass Moderator	-6 7 4 -5 -1 2
				7	cz		
				4	py		
				-5	px		
				-1	pz		
				2	pz		
2003	Core Shroud	1	0	-7	cz		-7 8 -4 5 -1 2
				8	cz		
				-4	py		
				5	px		
				-1	pz		
				2	pz		
2004	Upper Tie Plate Region	3	0	-8	cz	Material 3 is a Mixture of SS304 and Moderator	-8 4 -5 9 -10
				4	py		
				-5	px		
				9	pz		
				-10	pz		
2005	Core Grid Region	4	0	-8	cz	Material 4 is a Mixture of SS304 and Moderator	-8 4 -5 10 -11
				4	py		
				-5	px		
				10	pz		
				-11	pz		
2006	Upper Plenum Region	2	0	-8	cz		-8 4 -5 11 -1
				4	py		
				-5	px		
				11	pz		
				-1	pz		
2007	Lower Tie Plate Region	5	0	-8	cz	Material 5 is a Mixture of SS304 and Moderator	-8 4 -5 -12 13
				4	py		
				-5	px		
				-12	pz		
				13	pz		
2008	Fuel Support/ Core Support	6	0	-8	cz	Material 6 is a Mixture of SS304 and Moderator	-8 4 -5 -13 14
				4	py		
				-5	px		
				-13	pz		

Cell Index	Definition	Material Index	Universe	Surfaces: Surface Index	Surfaces: Mnemonic	Notes [reference as appropriate]	Cell Definition
				14	pz		
2009	Lower Plenum Region	2	0	-8	cz		-8 4 -5 -14 2
				4	py		
				-5	px		
				-14	pz		
				2	pz		
11	Fuel Assembly in Northwest Quadrant	2	151	-90	px	Filled with a Fuel Lattice Universe, the Reference Location is Rotated by 180° To Obtain this Cell	(-90 91 -92 93) (#(-90 93 94 95 96 n/a))
				91	px		
				-92	py		
				93	py		
				-90	px		
				93	py		
				94	c/z		
				95	py		
				96	px		
12	Fuel Assembly in Northeast Quadrant	2	151	n/a	n/a	Created by Rotating Cell 151 by 90°	
13	Fuel Assembly in Southeast Quadrant	2	151	n/a	n/a	Cloned from Cell 151 without Rotation	
14	Fuel Assembly in Southwest Quadrant	2	151	n/a	n/a	Created by Rotating Cell 151 by -90°	
15	Blade Window	2	151	97	py	Filled with a Control Blade Universe	(97 -98 99 -100): (-101 -102 -103 -104)
				-98	py		
				99	px		
				-100	px		
				-101	px		
				-102	px		
				-103	py		
				-104	px		
16	Guide Tube Segment	1	151	-105	c/z		-105 106
				106	c/z		
17	Inside Guide Tube Segment	0	151	-106	c/z		-106
2620	Active Core	2	0	-8	cz	Filled with Core Lattice Universe	-8 4 -5 -9 12
				4	py		
				-5	px		
				-9	pz		
				12	pz		
2621	Core Lattice	2	235	-107	px		-107 108 109 -110
				108	px		
				109	px		
				-110	px		

5. Integration Testing

Integration testing of the linkage automation is performed by repeating the analysis for the Quad Cities Unit 1 initial core (see the QC1 BOL Report). The MNCP input deck generated by BLINK, Version 0, is given in Attachment XII based on the input values given in that attachment. The results from the current analysis as well as the reference analysis are shown in Table 5-1. The excellent agreement with the actual critical measurement, where the eigenvalue is unity, and the previous analysis provides confidence that BLINK is properly preparing the MCNP model.

Table 5-1 Results of Integration Testing Case

Case	Eigenvalue	Uncertainty
Reference Analysis	1.00435	0.0004
Present Evaluation [a]	0.99967	0.00035

[a]. The input deck generated by BLINK for this case is named, "qc1c1_m.inp".

6. References

6.1 Briesmeister, J. F., Ed., *MCNP™ – A General Monte Carlo N-Particle Transport Code, Version 4A*, LA-12625-M, Los Alamos National Laboratory (LANL), November 1993. TIC #: 233782.

6.2 Briesmeister, J. F., Ed., *MCNP™ – A General Monte Carlo N-Particle Transport Code, Version 4B*, LA-12625-M, Los Alamos National Laboratory (LANL), March 1997. MOL.19980624.0328.

6.3 *Software Qualification Report for MCNP 4A, A General Monte Carlo N-Particle Transport Code*, Computer Software Configuration Item (CSCI): 30006-2003 REV 02, CRWMS M&O. MOL.19961028.0272.

6.4 *Software Qualification Report for MNCP 4B2, A General Monte Carlo N-Particle Transport Code*, CSCI: 30006 V4B2LV, DI#: 30033-2003 REV 01, CRWMS M&O. MOL.19980622.0637.

6.5 *Software Qualification Report for the SCALE Modular Code System Version 4.3*, SCALE Version 4.3 CSCI: 30011 V4.3, DI#: 30011-2002 REV 00, CRWMS M&O. MOL.19970804.0240.

6.6 *Core Design and Operating Data for Cycles 1 and 2 of Quad Cities 1*, EPRI NP-240, Electric Power Research Institute, Palo Alto, CA, November 1976. TIC #: 237267.

6.7 *MCNP CRC Reactivity Calculation for Quad Cities BWR*, DI#: BBA000000-01717-0200-00146 REV 00, CRWMS M&O. MOL.19971229.0128.

Table of Contents

Contents	Page
1. Introduction	4
2. Dataset Structure and Contents	4
3. Dataset Creation	6
3.1. Dataset Title Record	6
3.2. Comma-separated-variable Fields	6
3.3. Dataset Location	6
4. References	12

List of Figures

Figure	Contents	Page
Figure 3-1	Dataset for Unexposed Fuel	8
Figure 3-2	Dataset for Exposed Fuel	10

List of Tables

Table	Contents	Page
Table 2-1	Contents of Dataset	5

1. Introduction

This attachment describes the creation of the datasets defining the fuel materials dataset. These datasets must be provided for each unique node in the MCNP core model and are either based processed files from SAS2H (References 4.1 and especially 4.2), which provide isotopics for exposed fuel, or are created from the specification of fresh fuel This attachment provides a detailed list of contents for such datasets and documents the creation of the datasets of this type used in the present analysis.

2. Dataset Structure and Contents

A separate dataset is created for each unique fueled node partition in the core portion modeled. Here a "partition" may be either the entire lattice or some sub-set of the lattice (sub-lattice). Therefore, for a particular Commercial Reactor Critical (CRC) calculation (i.e., a combination of core exposure, control blade pattern and moderator temperature), datasets are available for each fuel node.

The dataset structure is an ASCII-format file that incorporates fields of comma-separated-variable (CSV) data. The contents of this dataset are given in Table 2-1.

Table 2-1 Contents of Dataset

Value	Description	Notes
Title	Descriptive Title of File Contents	For isotopics from SAS2H analysis, this should contain information about that evaluation; for fresh fuel, it should include the enrichment and integral burnable absorber inventory, if any.
Header for Density Values	"Density Value(s)"	This is an aid to users who may examine the file.
Density Value(s)	Material Density in Units of g/cm^3	This is a single value for data from SAS2H and a vector of values for each distinct fuel rod type for unexposed fuel. If the unexposed fuel isotopics are smeared across the lattice, then this is a single value.
Header for Fuel Rod Type Map	"Fuel Rod Type Map"	This is an aid to users who may examine the file.
Fuel Rod Type Map	Map of Indices for Placement of Unique Fuel Rod Types within the Lattice or Sub-lattice	This is used to properly assign unique fuel rod types for unexposed fuel lattices; otherwise used for consistency checking for other treatments.
Header for Fuel Material Compositions	"Fuel Material Compositions"	This is an aid to users who may examine the file.
Fuel Material Compositions		The following entries are on a single line and are repeated for each material in the fuel rod type.
	Fuel Rod Type	This is an index corresponding to the indices in the Fuel Rod Type Map. For data from SAS2H or smeared values for unexposed fuel, the entry is a blank, since there is a single fuel material composition
	Atomic Number	This is the atomic number of the isotope on this line.
	Library Suffix	This is the neutron interaction library suffix for this isotope.
	Mass Number	This is the mass number of the isotope on this line
	Weight Fraction	This is the weight fraction for the isotope on this line.

3. Dataset Creation

In order to facilitate the creation of these intermediate datasets and minimize the potential for transmission errors, automation was created for this process. The specification and development of this automation are described in Attachment VIII. That attachment also provides details on the computation of the isotopics for unexposed fuel lattices.

Each group of data in the dataset will now be discussed in greater detail and the creation of the dataset documented. The dataset for an unexposed lattice is shown in Figure 3-1. This dataset is based on the first lattice type given in the EPRI report on the initial core for Quad Cities-1 (Reference 4.3). This is a GE 7x7 lattice with a lattice-averaged enrichment of 2.12 w/o and two rods incorporating integral burnable absorber. One such fuel rod has a gadolinia concentration of 0.5 w/o, while the other has a concentration of 2.0 w/o. The dataset for an exposed lattice is shown in Figure 3-2. This lattice is a GE 8x8 lattice with two small water rods. The initial enrichment was 3.19 w/o with 6 gadolinia-bearing fuel rods with 3 w/o Gd_2O_3. The inventory of the entire lattice was uniformly distributed in the fuel rods of the exposed lattice.

3.1. Dataset Title Record

The first line of the dataset is a title. While the contents of this line are arbitrary, it should contain the following information to ensure consistency with the file name:

- lattice manufacturer;
- lattice dimensionality;
- lattice-averaged initial enrichment; and
- number and concentration of gadolinia-bearing fuel rods.

3.2. Comma-separated-variable Fields

These fields form the bulk of the information on the dataset. Note that the dataset has been loaded with the library suffixes appropriate to the recommended ENDF/B-V nuclear data constants in Appendix G of the MCNP User's Manuals (References 4.4 and 4.5).

3.3. Dataset Location

This dataset has a file name representative of its contents:

- mnneeegcccctaaazz.dat

In the file name, "m" is a single character representing the manufacturer (e.g., G for GE; S for Siemens or its predecessors – ANF or Exxon, and A for ABB). The second or second and third letters, "nn", represent the dimensionality of the lattice or sub-lattice (i.e., 7 - 7x7, 8 - 8x8, 9 - 9x9, 10 - 10x10, 4 - 4x4 sub-lattice). The next sequence of letters, "eee", represents the average ^{235}U weight-percentage enrichment of the lattice or sub-lattice modeled multiplied by a factor of 100. In the next string of characters, viz., "gccc", "g" is a literal character used to differentiate the gadolinia concentration from the enrichment, and "ccc" is a character string that gives the gadolinia concentration as a weight percentage again multiplied by a factor of 100. The single character denoted by "t" is the treatment of unique fuel rod types in the lattice. For unexposed fuel where data is provided for each distinct fuel rod, this character is the letter "D", representing a discrete set of data. For exposed fuel from SAS2H or unexposed fuel for which the isotopics have been mass-averaged over the lattice, the "t" becomes the letter "S", representing smeared values. The next string of three characters, "aaa", is an index to the assembly in which the lattice or sub-lattice is located. Finally, the trailing two characters, "zz", represent the axial location in the assembly, where a value of unity represents the bottom fuel node. The last two sets of characters are not present for unexposed data, since these values are reasonably expected to be applied to multiple nodes within the core.

Thus the file name g7303g02012304.dat represented a GE 7x7 lattice with an average ^{235}U enrichment of 3.03 w/o that incorporates gadolinia-bearing fuel rods with a lattice-averaged concentration of 0.2 w/o gadolinia. This node is contained in the fuel assembly with an index of "123" and is located in the fourth axial node.

Figure 3-1 Dataset for Unexposed Fuel

```
GE 7x7/Avg Enrichment 2.12/Avg Gadolinia  .070/Discrete
Density Value(s)
10.420,10.420,10.420,10.290,10.390
Fuel Rod Type Map
 3  3  2  2  2  2  3
 3  2  2  1  1  1  2
 2  2  5  1  1  1  1
 2  1  1  1  1  4  1
 2  1  1  1  1  1  1
 2  1  1  4  1  1  1
 3  2  1  1  1  1  2
Fuel Material Compositions
Index  1,92,.50c,234, .00018
,92,.50c,235, .02177
,92,.50c,236, .00010
,92,.50c,238, .85942
,8,.50c,16, .11853
,64,.52c,152, .00000
,64,.50c,154, .00000
,64,.50c,155, .00000
,64,.50c,156, .00000
,64,.50c,157, .00000
,64,.50c,158, .00000
,64,.50c,160, .00000
Index  2,92,.50c,234, .00012
,92,.50c,235, .01499
,92,.50c,236, .00007
,92,.50c,238, .86631
,8,.50c,16, .11852
,64,.52c,152, .00000
,64,.50c,154, .00000
,64,.50c,155, .00000
,64,.50c,156, .00000
,64,.50c,157, .00000
,64,.50c,158, .00000
,64,.50c,160, .00000
Index  3,92,.50c,234, .00008
,92,.50c,235, .01058
,92,.50c,236, .00005
,92,.50c,238, .87078
,8,.50c,16, .11851
,64,.52c,152, .00000
,64,.50c,154, .00000
,64,.50c,155, .00000
,64,.50c,156, .00000
,64,.50c,157, .00000
,64,.50c,158, .00000
,64,.50c,160, .00000
```

Figure 3-1 (cont'd)

```
Index  4,92,.50c,234, .00018
,92,.50c,235, .02112
,92,.50c,236, .00010
,92,.50c,238, .83364
,8,.50c,16, .11894
,64,.52c,152, .00005
,64,.50c,154, .00056
,64,.50c,155, .00380
,64,.50c,156, .00528
,64,.50c,157, .00406
,64,.50c,158, .00649
,64,.50c,160, .00579
Index  5,92,.50c,234, .00018
,92,.50c,235, .02166
,92,.50c,236, .00010
,92,.50c,238, .85512
,8,.50c,16, .11859
,64,.52c,152, .00001
,64,.50c,154, .00009
,64,.50c,155, .00063
,64,.50c,156, .00088
,64,.50c,157, .00068
,64,.50c,158, .00108
,64,.50c,160, .00096
```

Figure 3-2 Dataset for Exposed Fuel

```
GE 8x8/Avg Enrichment  3.19/Avg Gadolinia   .290/Exposed Fuel
Generated by IDSGEN  0:- on 15-May-98 at 14:55:31 by Process 10020
Fuel Rod Type Map
 1  1  1  1  1  1  1  1
 1  1  1  1  1  1  1  1
 1  1  1  1  1  1  1  1
 1  1  1  1 -1  1  1  1
 1  1  1 -1  1  1  1  1
 1  1  1  1  1  1  1  1
 1  1  1  1  1  1  1  1
 1  1  1  1  1  1  1  1
Density Value(s)
10.171
Fuel Material Compositions
 69
  1,.50c,  3,3.2052E-06
  2,.50c,  4,7.5629E-06
  8,.50c, 16,1.1972E+01
 33,.35c, 75,9.0034E-06
 36,.50c, 82,3.1212E-05
 36,.50c, 83,3.2832E-03
 36,.50c, 84,9.1835E-03
 36,.50c, 86,1.5186E-02
 39,.50c, 89,3.7514E-02
 40,.50c, 93,3.7514E-02
 42,.50c, 95,5.9122E-02
 43,.50c, 99,6.2424E-02
 44,.50c,101,5.8342E-02
 44,.50c,103,1.6086E-04
 45,.50c,103,3.5834E-02
 46,.50c,105,2.5930E-02
 46,.50c,108,8.8233E-03
 47,.50c,109,5.7742E-03
 54,.50c,131,3.4993E-02
 54,.35c,134,1.1404E-01
 55,.50c,133,9.1835E-02
 55,.50c,135,3.2472E-02
 56,.50c,138,9.8437E-02
 59,.50c,141,8.5832E-02
 60,.50c,143,6.1823E-02
 60,.50c,145,5.3360E-02
 60,.50c,147,5.7322E-07
 60,.50c,148,2.7550E-02
 61,.50c,147,1.0564E-02
 61,.50c,148,6.9626E-08
 62,.50c,147,1.3085E-02
 62,.50c,149,1.1824E-04
 62,.50c,150,1.9867E-02
 62,.50c,151,7.9230E-04
 62,.50c,152,1.0684E-02
 63,.55c,151,4.9939E-06
 63,.50c,152,5.3480E-06
 63,.55c,153,7.6829E-03
 63,.50c,154,1.0144E-03
 63,.50c,155,3.1212E-04
 64,.50c,152,6.0023E-06
```

```
64,.50c,154,2.2028E-04
64,.50c,155,1.8127E-05
64,.50c,156,4.1476E-03
64,.50c,157,3.0792E-06
64,.50c,158,9.2435E-04
64,.50c,160,6.0623E-05
67,.55c,165,3.0011E-06
90,.50c,232,5.6541E-09
92,.50c,233,8.2831E-09
92,.50c,234,1.5846E-02
92,.50c,235,7.3228E-01
92,.50c,236,3.4513E-01
92,.50c,237,1.9747E-08
92,.50c,238,8.4032E+01
93,.50c,237,2.3889E-02
94,.50c,238,7.2027E-03
94,.55c,239,3.2772E-01
94,.50c,240,1.6566E-01
94,.50c,241,6.2424E-02
94,.50c,242,2.8091E-02
95,.50c,241,6.3624E-03
95,.50c,242,8.1031E-05
95,.50c,243,3.8354E-03
96,.50c,242,3.4273E-04
96,.35c,243,1.0924E-05
96,.50c,244,6.6025E-04
96,.35c,245,1.4225E-05
96,.35c,246,1.2005E-06
```

4. References

4.1 *Software Qualification Report for the SCALE Modular Code System Version 4.3*, SCALE Version 4.3 Computer Software Configuration Item (CSCI): 30011 V4.3, DI#: 30011-2002 REV 00, CRWMS M&O. MOL.19970804.0240.

4.2 *CRC Depletion Calculations for Quad Cities Unit 2*, DI#: B00000000-01717-0210-00009 REV 00, CRWMS M&O. MOL.19980730.0510.

4.3 *Core Design and Operating Data for Cycles 1 and 2 of Quad Cities 1*, EPRI NP-240, Electric Power Research Institute, Palo Alto, CA, November 1976. TIC #: 237267.

4.4 Briesmeister, J. F., Ed., *MCNP™ – A General Monte Carlo N-Particle Transport Code*, Version 4A, LA-12625-M, Las Alamos National Laboratory, November 1993. TIC #: 233762.

4.5 Briesmeister, J. F., Ed., *MCNP™ – A General Monte Carlo N-Particle Transport Code, Version 4B*, LA-12625-M, Los Alamos National Laboratory (LANL), March 1997. MOL.19980624.0328.

Table of Contents

Contents	Page
1. Introduction	5
2. Specifications	5
2.1. Computation of Constituents for Unexposed Fuel	5
2.2. Computation of Constituents for Exposed Fuel	7
2.3. Computation of Values for FMID Naming Nomenclature	9
3. Encoding of Process	10
3.1. Program Flow	10
3.2. Input Parameters to Process	12
3.3. Detailed Algorithms	14
4. Testing	24
4.1. Unexposed Fuel	24
4.2. Exposed Fuel	33
5. Integration Testing	36
6. References	37

List of Figures

Figure	Contents	Page
Figure 3-1	Flowchart for Intermediate Fuel Dataset Creation	11
Figure 3-2	Flowchart for Input Process	16
Figure 3-3	Flowchart for Processing of Unexposed Fuel Lattices	18
Figure 3-4	Flowchart for Processing of Exposed Fuel Lattices	22
Figure 4-1	Example Input Deck for Unexposed Fuel, Non-smeared	24
Figure 4-2	Example Input Deck for Unexposed Fuel, Smeared	25
Figure 4-3	Example Dataset for Unexposed Fuel, Non-smeared	26
Figure 4-4	Example Dataset for Unexposed Fuel, Smeared	28
Figure 4-5	Example Input Deck for Exposed Case	33
Figure 4-6	Dataset for Exposed Fuel	34

List of Tables

Table	Contents	Page
Table 3-1	Input to Software Routine	13
Table 3-2	List of Service Routines	14
Table 3-3	List of Input Routines	15
Table 3-4	List of Routines for Processing Unexposed Fuel Lattices	17
Table 3-5	List of Routines for Processing Exposed Fuel Lattices	21

List of Worksheets

Worksheet	Contents	Page
Worksheet 2-1	Solution for Uranium Isotopic Atom Fractions	8
Worksheet 4-1	Assumed Lattice Parameters	29
Worksheet 4-2	Assumed Atomic Weights and Natural Abundances	30
Worksheet 4-3	Computation of Isotopic Weight Fractions for Unexposed Fuel	31

1. Introduction

This attachment contains the specifications for and documents the development of a software routine to create Fuel Material Intermediate Datasets (FMID's) for Commercial Reactor Critical calculations.

The fuel pellet material compositions for exposed fuel must be obtained from the output of the CRAFT Version 4B (Reference 6.1), which is an executive program for performing calculations with the SAS2H sequence of the SCALE code (Reference 6.2, the Software Qualification Report). For unexposed fuel these material compositions must be computed from the description of the fuel (i.e., enrichment and integral burnable absorber loading–if any). The software routines which are specified and developed in this attachment automate the creation of fuel intermediate material datasets. These datasets are intermediate in the sense that they represent processed results from SAS2H analyses, but are not the card image input representations for MCNP (References 6.3 and 6.4 – the Los Alamos National Laboratory (LANL) User's Manuals – and References 6.5 And 6.6 – the Software Qualification Reports).

2. Specifications

This process must include the following functions:

- accept input from the user that controls the operation of the software routine and specifies the source of information about the fuel composition;
- for unexposed fuel, compute the appropriate weight percentages for the constituent elements and nuclides;
- for exposed fuel, process the isotopics available from SAS2H analyses;
- for exposed fuel, accommodate a custom set of nuclides to process, excluding others that are present in the processed SAS2H file;
- create a Fuel Material Intermediate Dataset for this fuel composition; and
- create an output file that documents the processing performed.

2.1. Computation of Constituents for Unexposed Fuel

While the ^{235}U enrichment is provided on a fuel rod-by-fuel rod basis, the weight percentages of the remaining uranium isotopes are not; therefore, the following equations (page 16 of Reference 6.7) are used to compute the weight percentages of ^{234}U, ^{236}U and ^{238}U for a given enrichment.

Eq. 2-1 $$W_{24} = 0.007731 \cdot (W_{25})^{1.0837}$$

Eq. 2-2 $$W_{26} = 0.0046 \cdot W_{25}$$

Eq. 2-3 $$W_{28} = 100.0 - W_{24} - W_{25} - W_{26}$$

Here, the uranium isotopes have been identified with two-digit subscripts. The first digit is the last number in the atomic number and the second digit is the last digit in the mass number.

2.1.1. Urania Fuel

For fuel that does not contain gadolinia, the weight fractions of the constituent isotopes, assuming nominal stochiometry, may be calculated with the following expressions:

Eq. 2-4 $$AW_U = \frac{\sum_{i=24}^{28}(w_i \cdot AW_i)}{100.0}$$ (g/g·atom)

Note that strictly, the atom percentage should be used in this equation; however, it is shown in §2.2 that this approximation makes a negligible difference in calculated uranium isotopic inventories.

Eq. 2-5 $$AW_{UO_2} = AW_U + AW_O$$ (g/g·atom)

Eq. 2-6 $$M_{UO_2} = \frac{\rho_{UO_2} \cdot \left(\frac{\pi \cdot D^2}{4}\right)}{AW_{UO_2}}$$ (g·atom/cm)

Eq. 2-7 $$M_U = M_{UO_2}$$ (g·atom/cm)

Eq. 2-8 $$M_O = 2 \cdot M_{UO_2}$$ (g·atom/cm)

Eq. 2-9 $$m_U = M_U \cdot AW_U$$ (g/cm)

Eq. 2-10 $$m_O = M_O \cdot AW_O$$ (g/cm)

Eq. 2-11 $$m_i = \frac{m_U \cdot w_i}{100.0}$$ (g/cm)

Eq. 2-12 $$f_i = \frac{m_i}{\rho \cdot \left(\frac{\pi \cdot D^2}{4}\right)}$$ (dimensionless)

In these equations, *w* represents the weight percentage of the uranium isotopes in uranium metal, *AW* represents the atomic weight (g/g·atom), ρ represents the mass density (g/cm^3), *D* represents the fuel pellet outer diameter (cm), *M* represents the linear atomic density (g·atom/cm), *m* represents the linear mass loading (g/cm), and *f* represents the mass fraction of a given constituent in UO_2.

2.1.2. Urania Fuel Incorporating Gadolinia as an Integral Burnable Absorber

For fuel incorporating gadolinia as an integral burnable absorber, the equations of §2.1.1 must be modified to accommodate the presence of the Gd_2O_3. The fuel pellet density for such fuel varies with the amount of gadolinia incorporated.

Eq. 2-13 $$m_{Gd_2O_3} = w_{Gd} \cdot \rho_{UO_2Gd_2O_3} \cdot \left(\frac{\pi \cdot D^2}{4}\right)$$ (g/cm)

Eq. 2-14 $m_{UO_2} = m_{UO_2Gd_2O_3} - m_{Gd_2O_3}$ (g/cm)

Once the UO_2 density has been computed, the weight fractions of the uranium isotopes in the fuel may be computed from the relationships given in §2.1.1.

Eq. 2-15 $M_{Gd_2O_3} = \frac{m_{Gd_2O_3}}{AW_{Gd_2O_3}}$ (g·atom/cm)

Eq. 2-16 $M_{Gd} = 2 \cdot M_{Gd_2O_3}$ (g·atom/cm)

Eq. 2-17 $M_O = 2 \cdot M_{UO_2} + 3 \cdot M_{Gd_2O_3}$ (g·atom/cm)

Eq. 2-18 $m_{Gd} = M_{Gd} \cdot AW_{Gd}$ (g/cm)

Eq. 2-19 $m_{Gd_i} = m_{Gd} \cdot w_{Gd_i}$ (g/cm)

Eq. 2-20 $f_{Gd_i} = \frac{m_{Gd_i}}{m_{Gd_2O_3}}$ (dimensionless)

2.2. Computation of Constituents for Exposed Fuel

For exposed fuel, nodal masses of the constituents are read from the SAS2H file. To reduce the number of isotopes treated in the fuel, the SAS2H calculations do not include oxygen in the fuel material definition; therefore, the oxygen must be added back into the material composition for processing by MCNP. The nodal mass (grams) for oxygen in the fresh fuel that corresponds to the exposed fuel composition provided in the SAS2H file is computed as:

Eq. 2-21 $$m_{oxygen}^{nodal} = \frac{\left(m_{UO2}^{nodal} \cdot AW_{oxygen} \cdot 200\right)}{\left(\varepsilon_{25} \cdot AW_{25} + \varepsilon_{24} \cdot AW_{24} + \varepsilon_{26} \cdot AW_{26} + \varepsilon_{28} \cdot AW_{28} + 200 \cdot AW_O\right)}$$

Here ε is the initial weight percentage for each of the uranium isotopes and the *AW* values are the elemental and isotopic atomic weights. The weight percentage value for ^{235}U is the reported initial enrichment, while the values for the other isotopes are computed from Equations 2-1 through 2-3. Note the computation of the atomic weight for uranium in the denominator of Equation 2-21 is an approximation. The proper computation of the atomic weight for uranium (g/g·atom) is:

Eq. 2-22 $AW_U = f_{25} \cdot AW_{25} + f_{24} \cdot AW_{24} + f_{26} \cdot AW_{26} + f_{28} \cdot AW_{28}$

Here, f_i is the atom fractions for each of the uranium isotopes; however, these atom fractions are not known. Considering for the moment a mass of uranium with the given enrichment distribution, it may be noted that:

Eq. 2-23 $$\varepsilon_i = \frac{m_i}{m_U} \cdot 100 = \frac{m_i}{M_m^U \cdot AW_U} \cdot 100 = \frac{M_i \cdot AW_i}{M_U \cdot AW_U} \cdot 100$$

The atom fractions for the same isotopes may be written as:

Eq. 2-24 $$f_i = \frac{M_i}{M_U}$$ (dimensionless)

Combining the two previous equations and solving for the atom fraction yields:

Eq. 2-25 $$f_i = \frac{\varepsilon_i}{100} \cdot \frac{AW_U}{AW_i}$$ (dimensionless)

The exact form of Equation 2-21 is thus:

Eq. 2-26 $$m_{oxygen}^{nodal} = \frac{\left(m_{UO2}^{nodal} \cdot 200 \cdot AW_{oxygen}\right)}{\left[AW_U \cdot \sum_i \left(\frac{\varepsilon_i}{AW_i}\right) + 200 \cdot AW_O\right]}$$ (g/cm)

From Equation 2-25, the atom percentages and the atomic weight for the uranium are unknown; however, the atomic weight may readily be computed from the atom fractions:

Eq. 2-27 $$AW_U = \sum_i (f_i \cdot AW_i)$$ (g/g·atom)

Thus for each of the four uranium isotopes, there is a separate equation and the four may be used to solve for the atom fractions.

Eq. 2-28 $$\left(1 - \frac{\varepsilon_i}{100}\right) \cdot f_i + \sum_{j \neq i} \frac{\varepsilon_i \cdot AW_j}{100 \cdot AW_i} \cdot f_j = 0$$

This system of equation was solved for fuel enriched to 5 w/o and the results are shown in Worksheet 2-1. This table is divided into two sections. The first section provides the known weight percentages for uranium enriched to 5 w/o in ^{235}U, the isotopic weights and the isotopic atom fractions computed from the system of equations. This section also includes the uranium atomic weights computed both from the atom fractions and approximated with the weight percentages. The second section shows the solution of the system of linear equations. Since this system was solved with an iterative method, the column denoted as "Row Sums" and the entry labeled as "Total" provide a measure of the convergence of the solution. As may be seen from the comparison of the two atomic weights for uranium, there is negligible error in using the weight percentages rather than the atom fractions.

Worksheet 2-1 Solution for Uranium Isotopic Atom Fractions

	Enrichment						
	ε_{235}	ε_{234}	ε_{236}	ε_{238}	AW	$AW_{improper}$	Δ
w/o	5.00000	0.04423	0.02300	94.93277	238.03674	237.89821	-0.000582
AW	235.043922	234.040945	236.045561	238.050785			
a/o	0.05020	0.00071	0.00036	0.94932			

Isotope	Terms in Equation	Row Sums

25	0.047690285	-3.5499E-05	-1.8075E-05	-0.04807306	-0.0004364
24	-2.2298E-05	0.000712714	-1.6057E-07	-0.00042707	0.0002632
26	-1.1497E-05	-1.626E-07	0.000359881	-0.0002202	0.000128
28	-0.04705458	-0.0006655	-0.00033885	0.048104061	4.514E-05
				Total	3.792E-16

For constituent isotopes other than uranium, the weight percentages are computed directly as:

Eq. 2-29 $$W_i = \frac{m_i^{nodal}}{m_{UO2}^{nodal}}$$ (dimensionless)

The nodal mass for UO_2 is that of the fresh fuel and is computed as:

Eq. 2-30 $$m_{UO2}^{nodal} = H \cdot \sum_i \left[N_i \cdot \rho_i \cdot \left(\frac{\pi}{4}\right) \cdot D_i^2 \right]$$

Since MCNP re-normalizes the weight percentages of a particular composition, this treatment is acceptable. Here N_i is the number of fuel rods for each fuel rod type in the lattice, ρ_i is the pellet density for this rod type, D_i is the fuel pellet diameter, and H is the height of node.

The density for the exposed fuel is computed from the isotopic inventories obtained from the SAS2H file, the oxygen inventory from Equation 2-21, and the fuel nodal mass computed from the initial enrichment, pellet diameters and the node height. This is computed as:

Eq. 2-31 $$\rho_{eff} = \frac{\sum_j m_j + m_{oxygen}^{nodal}}{m_{UO2}^{nodal}}$$

Here m_j is the nodal mass of each constituent from the SAS2H file. Since the mass from SAS2H is less than the initial mass due to the failure of some isotopes to meet the lower cutoff in that code, the density is less than the initial density.

2.3. Computation of Values for FMID Naming Nomenclature

As a part of the naming of the Fuel Material Intermediate Datasets, the lattice-averaged enrichment and lattice-averaged gadolinia concentration are used. The lattice-averaged enrichment is directly computed from the input values as:

Eq. 2-32 $$\bar{\varepsilon} = \frac{\sum_i (N_i \cdot \varepsilon_i)}{N_{rods}}$$

Here, N_i is the number of fuel rods associated with a given pellet enrichment, ε_i is the pellet enrichment and N_{rods} is the total number of fuel rods in the lattice.

The lattice-averaged gadolinium concentration is computed based on the UO_2 linear mass for the lattice.

Eq. 2-33 $$L_{UO2} = \sum_i \rho_i \cdot N_i \cdot \left(\frac{\pi}{4}\right) \cdot D^2_{pellet}$$

Here D_{pellet} is the pellet diameter and ρ_i is the fuel pellet outer diameter.

The lattice-averaged gadolinia concentration is then computed as:

Eq. 2-34 $$Gd_{avg} = \frac{\sum_i \left(Gd_i \cdot \rho_i \cdot N_i \cdot \left(\frac{\pi}{4}\right) \cdot D^2_{pellet} \right)}{L_{UO2}}$$

Here Gd_i is the gadolinia (Gd_2O_3) concentration associated with a given fuel rod type.

3. Encoding of Process

The computational algorithms and the process described in Attachment VII must be encoded in a software routine on an HP workstation. For this application, FORTRAN is used exclusively. The name for this software routine is "IDSGEN."

3.1. Program Flow

A flowchart for the software routine is shown in Figure 3-1.

Figure 3-1 Flowchart for Intermediate Fuel Dataset Creation

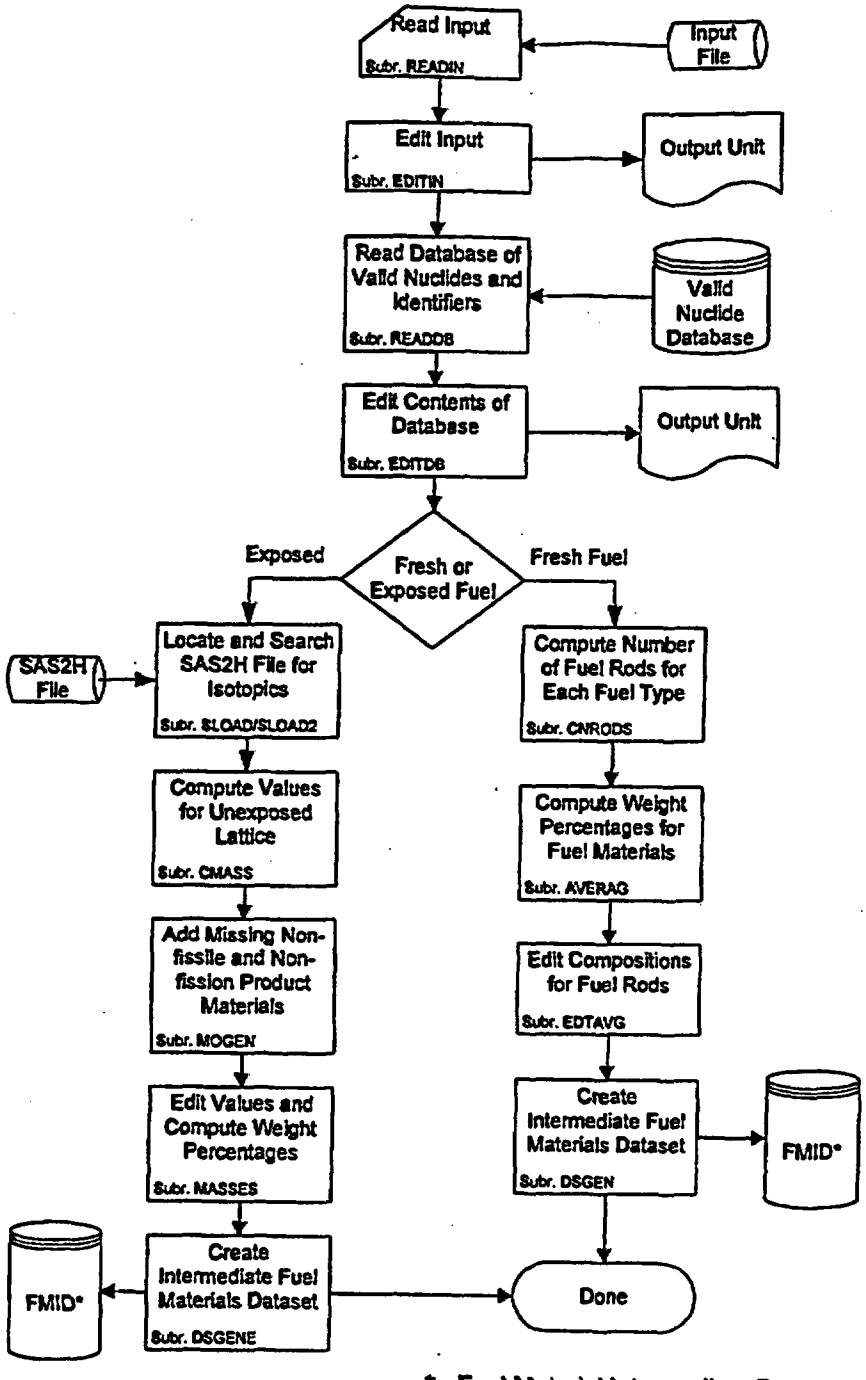

* - Fuel Material Intermediate Dataset

3.2. Input Parameters to Process

For exposed fuel isotopics from SAS2H analyses, the primary process input is the file name of the "cut" file which contains the masses of constituents present in the fuel. For unexposed fuel, information necessary properly to compute the fuel densities and weight fractions that will be uniformly allocated to all the fuel rods within the lattice or sub-lattice is required. This information is also required for exposed lattice cases to identify the data in accordance with the process nomenclature. For both cases, a database of valid nuclides is required. This database contains the valid MCNP identifiers and the corresponding SAS2H abbreviations. By changing this database, restricted sets of nuclides (e.g., principal isotopics, actinides only, etc.) may be written to FMID's.

The input is an ASCII-format file that incorporates both FORTRAN Namelist-type input and fields of space-delimited data. The input variables are described in Table 3-1.

3.2.1. Dataset Title Record

The first line of the dataset is a title. While the contents of this line are arbitrary, good practice indicates that it should contain the following information:

- name of fuel lattice manufacturer,
- lattice dimensionality,
- average enrichment,
- number of fuel rods containing integral burnable absorber and the concentration thereof, and
- software routine execution options.

3.2.2. Namelist Input

The FORTRAN Namelist-type input variables must adhere to the restrictions inherent in the format of such input. Care must be taken to ensure that the value provided is consistent with the data storage class in the automation (i.e., integer input for integer variables and real input for real variables) so that neither precision is not lost for real variables nor is illusory precision implied for integer variables.

3.2.3. List Input Fields

These fields are used for vectors of data, such as stack densities and "maps" indicating the locations of unique fuel rods types within the lattice. While these are read in a "free-format," good practice indicates that they should be arrayed in a regular fashion that maximizes legibility.

Table 3-1 Input to Software Routine

Variable	Definition	Comments	Format
Title	Case Title	Character String – Describes Lattice	Single Record
OPTION	Processing Option	0 – unexposed fuel, 1 – exposed fuel (integer)	Namelist
NLAT	Lattice or Sub-lattice Dimensionality	Used for processing fuel rod type map and creating the final dataset name (integer)	Namelist
MDEX	Fuel Manufacturer	Used for creating the final dataset name (single character)	Namelist
DB_NAME	File Specification for Valid Nuclide Database	Used for Exposed Fuel Cases Only	Namelist
CUT	Data from "cut" File	Flag to indicate whether the SAS2H Values are being Processed from a Full SAS2H Output or a "cut" File (0 – Full Output, 1 – "cut" File)	Namelist
NOGAD	Omit Gadolinia Associated with Integral Burnable Absorber	Flag to indicate whether Gadolinium Isotopes from Integral Burnable Absorber will be Deleted from FMID's (0 – Retain Gadolinium Isotopes, 1 – Delete Gadolinium Isotopes)	Namelist
NOFPGD	Omit Fission Product Gadolinium Isotopes	Flag to indicate whether Gadolinium Isotopes Generated as Fission Products will be Deleted from FMID" (0 —Retain Gadolinium Isotopes, 1 – Delete Gadolinium Isotopes)	Namelist
FADEX	Fuel Assembly Index	Used for creating the final dataset name for exposed fuel lattices (integer in the range of unity through 999)	Namelist
NODE	Axial Node	Used for creating the final dataset name for exposed fuel lattices (integer in the range of unity through 25)	Namelist
NTYPE	Number of Unique Fuel Rod Types	Unity for exposed fuel	Namelist
SMEAR	Flag for Producing Lattice-averaged Values	0 - do not smear, 1 - smear (integer – applicable to unexposed fuel only)	Namelist
DENSITY	Fuel Stack Densities	Dimensions are g/cm^3 (real – applicable to unexposed fuel only)	List Format
PELOD	Pellet Outer Diameter	Dimensions are in inches (real – applicable to unexposed fuel only)	List Format
ENRICH	^{235}U Enrichment	Weight Percentages (real – applicable to unexposed fuel only)	List Format
GCON	Gadolinia Concentrations	Weight Percentages (real – applicable to unexposed fuel only)	List Format
MAP	Fuel Rod Type Map	(integer – a value of -1 indicates a water rod)	List Format

3.3. Detailed Algorithms

The coding that comprises the software routine is described in this sub-section by functional block. Listings of the FORTRAN coding are provided in Attachment XV.

3.3.1. Driver Routine

The driver routine manages the overall processing performed by the software routine and is well represented by the flowchart in Figure 3-1. It is comprised of the main routine IDSGEN and the block data section.

3.3.2. Service Routines

These are routines that provide memory management, file management, control of overall output processing, and miscellaneous services. These routines are listed in Table 3-2. Memory management in this software routine is not true memory management in the sense of requesting additional process space from the UNIX operating system, but rather allocation of a fixed amount of memory from a pre-allocated amount in BLANK COMMON. Thus improved memory utilization is obtained by allocating regions of the fixed memory for specific processes and then returning it to this "pool" when finished.

Table 3-2 List of Service Routines

Name	Function
ABORT	Common Location for Controlled Abort of Processing when Error Detected by Coding
FCLOSE	Manages the Closure of Open Files
FOPEN	Manages the Opening of Sequential Text Files
HEADER	Prints Header for New Page; also Obtains Process Information (i.e., Date, Time and Process Identification Number for Case Identification)
INVALR	Initializes a Real Array to a Given Value
LINES	Tracks the Number of Output Lines on an Output Page and Requests a New Page when Current Page Full
MCHAR	Determines the Last Non-blank Character in a Character String
MEMORY	Manages Memory
MEMSUM	Edit Dynamic Memory Allocation Statistics

3.3.3. Input Processing

These routine control the processing of input data to the software routine (not including the processing of the SAS2H "cut" file); thus, they process the input variables shown in Table 3-1. These routines are listed in Table 3-3 and the flow of the input process is shown in Figure 3-2.

Table 3-3 List of Input Routines

Name	Function
ECHO	Echoes the Input Card Images to the Output File
EDITIN	Edits in the Input to the Software Routine
R2DMAP	Reads Rectangular Arrays of Integer Values
RDBVAL	Performs Reading of Valid Nuclide Database Entries
READDB	Manages the Reading of Database of Valid Nuclide, Including Memory Management
READIN	Reads NAMELIST-type Input and Manages Processing of Vector and Array Input in List-directed Format
RRD	Reads Vectors of Real Values

Figure 3-2 Flowchart for Input Process

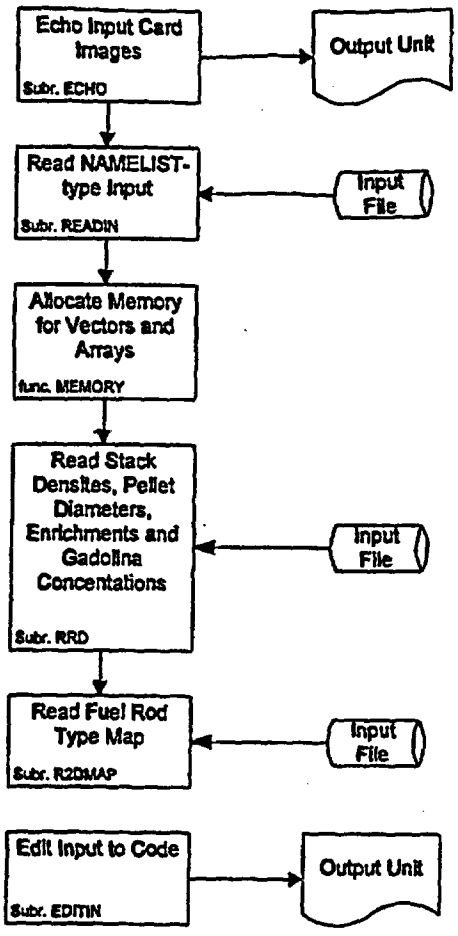

3.3.4. Unexposed Fuel Processing Routines

These routines translate the input description of the lattices into dataset representation using the equations described in §2.1.1 and 2.1.2. These routines are listed in Table 3-4 and the flow of the process is shown in Figure 3-3.

Table 3-4 List of Routines for Processing Unexposed Fuel Lattices

Name	Function
AVERAG	Computes the Material Composition of Each Unique Fuel Rod in the Lattice
CNRODS	Determines the Number of Unique Fuel Rod Types in the Lattice
DSGEN	Create Fuel Material Intermediate Dataset
EDTAGV	Edits the Results of the Computations in Subroutine AVERAG

Figure 3-3 Flowchart for Processing of Unexposed Fuel Lattices

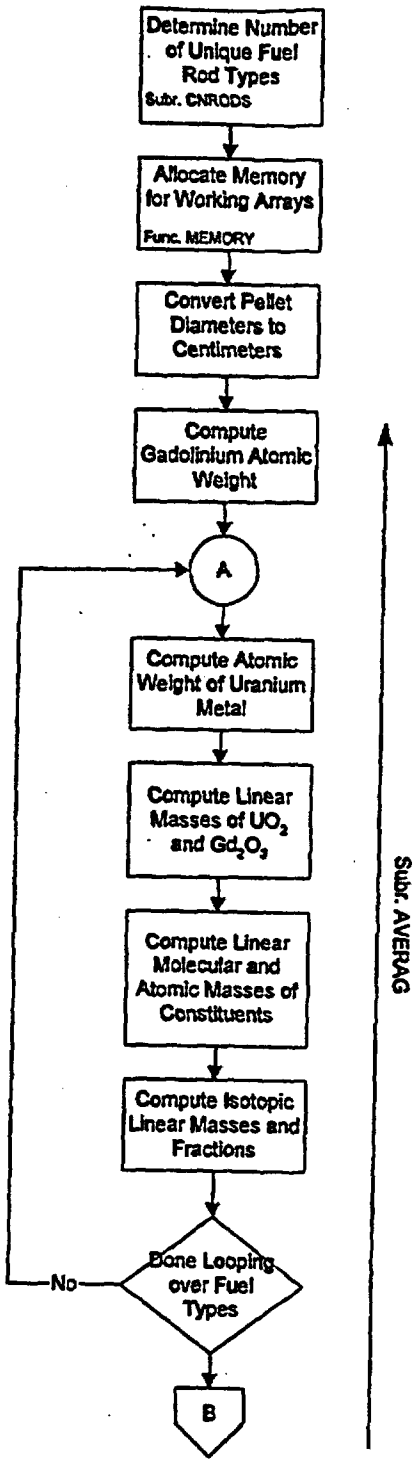

Figure 3-3 (cont'd)

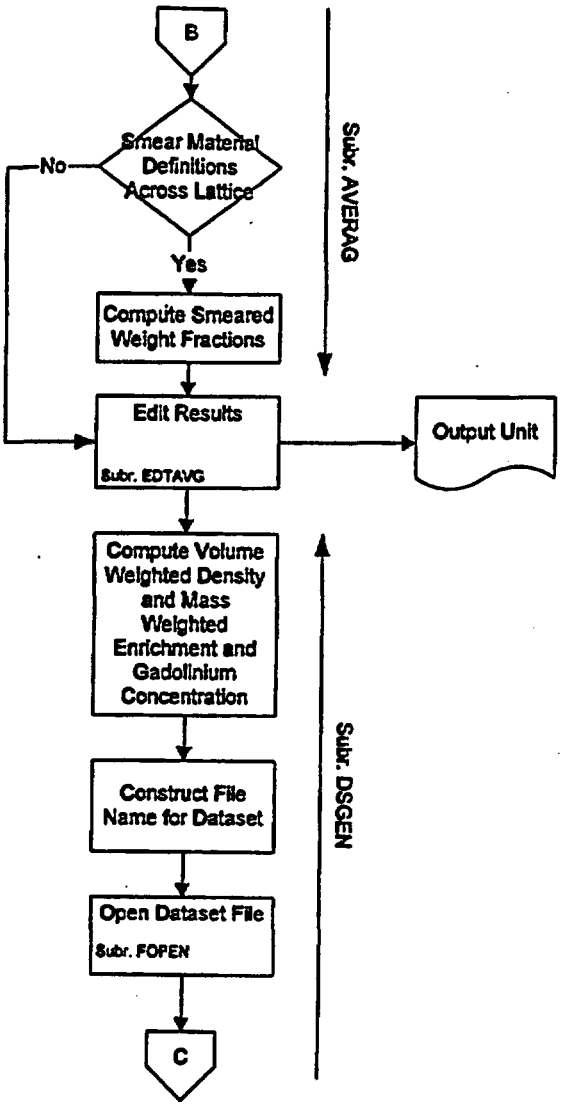

Figure 3-3 (cont'd)

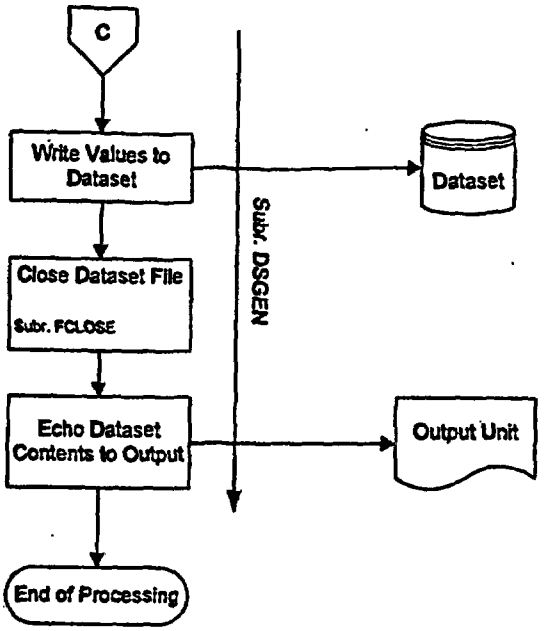

3.3.5. Exposed Fuel Processing Routines

These routines translate the input description of the lattices into dataset representation using the equations described in §2.2. These routines are listed in Table 3-5 and the flow of the process is shown in Figure 3-4.

Table 3-5 List of Routines for Processing Exposed Fuel Lattices

Name	Function
CMASS	Computes the UO_2 Mass for Unexposed Fuel and the Average Enrichment and Average Density
DSGENE	Write Fuel Material Intermediate Dataset for Exposed Fuel
MASSES	Computes Weight Percentages for Exposed Fuel
MATCH	Matches MCNP Nuclide Prefix with Entry in Valid Nuclide List and Returns the Corresponding Index
MATCH2	Matches Nuclide Labels from SAS2H "cut" File and Entries in Valid Nuclide List and Returns the Corresponding Index
MOGEN	Generate Oxygen Mass for Initial Fuel Composition
SLOAD	Interrogates the SAS2H "cut" File and Reads the Appropriate Nuclide Masses
SLOAD2	Interrogates the SAS2H Full Output File and Reads the Appropriate Nuclide Masses

Figure 3-4 Flowchart for Processing of Exposed Fuel Lattices

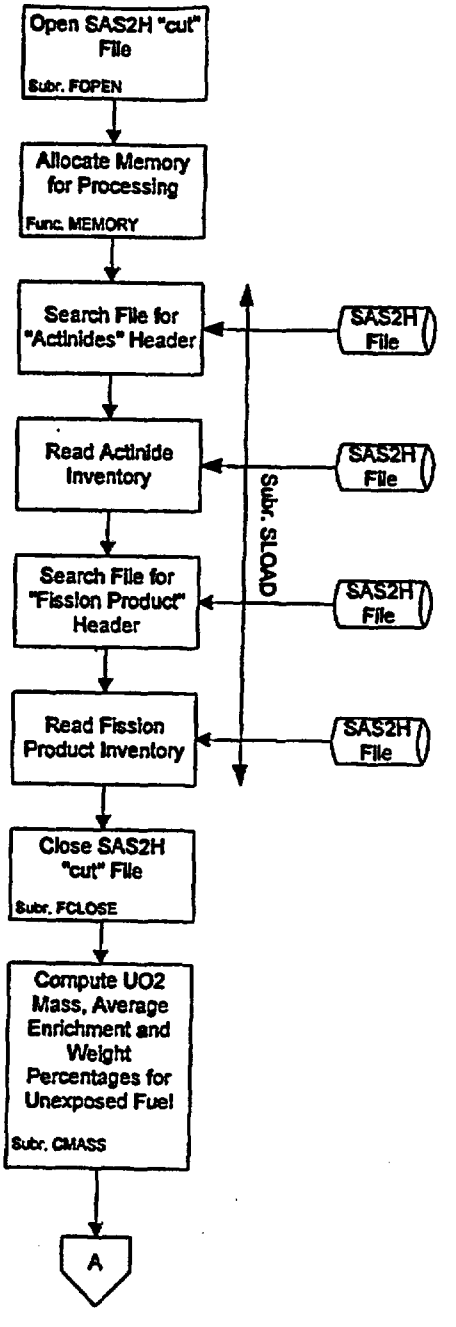

Figure 3-4 (cont'd)

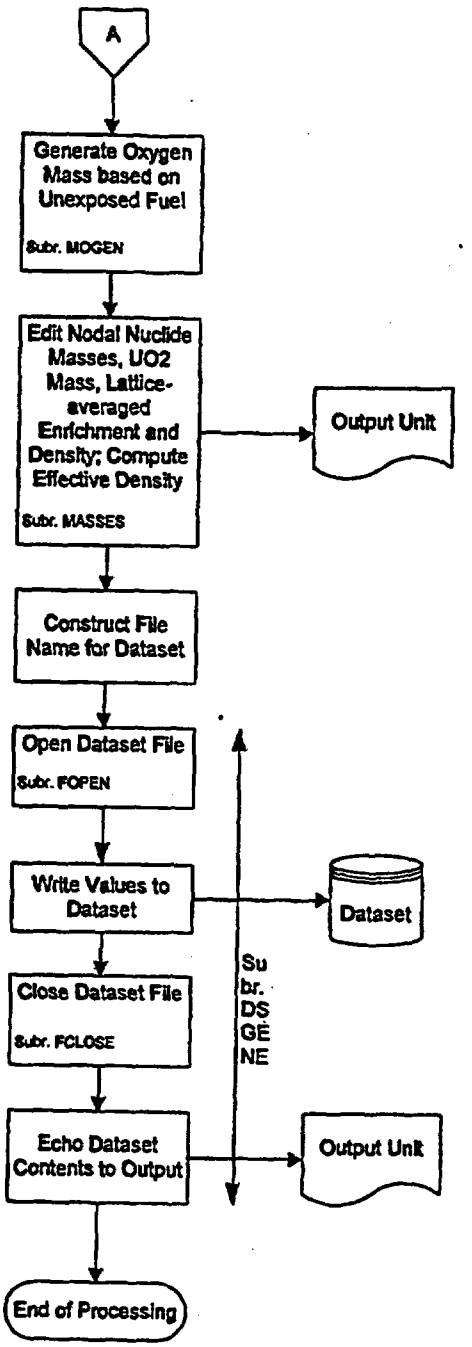

4. Testing

This section contains examples of the computations performed by the software routine. Three examples are included and verify the proper functioning of the coding; two for unexposed fuel, both with and without smearing, and one for exposed fuel.

4.1. Unexposed Fuel

For both examples, viz., without and with smearing, the first lattice type from the EPRI Quad Cities-1 Initial Core report will be used (Reference 6.8, hereafter cited as the "EPRI Report"). This is a GE 7x7 lattice with a lattice-averaged enrichment of 2.12 w/o and which incorporates two fuel rods with integral burnable absorber. One such rod has a gadolinia concentration of 0.5 w/o, while the other has an inventory of 2.0 w/o. The input deck for the non-smeared case is shown in Figure 4-1, while the input deck for the smeared case is shown in Figure 4-2. The resulting fuel material intermediate datasets are shown in Figures 4-3 and 4-4, respectively. Computations that demonstrate that the software routine is properly performing these calculations are shown in Worksheets 4-1, 4-2 and 4-3. Note that in Worksheet 4-3, the results for the non-smeared case are entitled as, "Isotopic Fractions by Rod Type," while those for the smeared case and is entitled as, "Isotopic Fractions for Lattice."

Figure 4-1 Example Input Deck for Unexposed Fuel, Non-smeared

```
Test Case for Fuel Material Intermediate Dataset Creation
$FUEL
 OPTION = 0
 NLAT = 7
 MDEX = 'G'
 DB_NAME = '/users/anderson/util/idsgen/complete_nuclide_list.db'
 NTYPE = 5
 FADEX = 1
 SMEAR = 0
$END
Stack Densities
3*10.42,10.29, 10.39
Pellet Outer Diameters
3*0.488, 2*0.487
Enrichments
2.47, 1.70, 1.20, 2*2.47
Gadolinia Concentrations
3*0.0, 3.0, 0.5
Fuel Rod Type Map
 3 3 2 2 2 2 3
 3 2 2 1 1 1 2
 2 2 5 1 1 1 1
 2 1 1 1 1 4 1
 2 1 1 1 1 1 1
 2 1 1 4 1 1 1
 3 2 1 1 1 1 2
```

Figure 4-2 Example Input Deck for Unexposed Fuel, Smeared

```
Test Case for Fuel Material Intermediate Dataset Creation
$FUEL
 OPTION = 0
 NLAT = 7
 MDEX = 'G'
 DB_NAME = '/users/anderson/util/idsgen/complete_nuclide_list.db'
 NTYPE = 5
 FADEX = 1
 SMEAR = 1
$END
Stack Densities
3*10.42,10.29, 10.39
Pellet Outer Diameters
3*0.488, 2*0.487
Enrichments
2.47, 1.70, 1.20, 2*2.47
Gadolinia Concentrations
3*0.0, 3.0, 0.5
Fuel Rod Type Map
 3 3 2 2 2 2 3
 3 2 2 1 1 1 2
 2 2 5 1 1 1 1
 2 1 1 1 1 4 1
 2 1 1 1 1 1 1
 2 1 1 4 1 1 1
 3 2 1 1 1 1 2
```

Figure 4-3 Example Dataset for Unexposed Fuel, Non-smeared

```
GE 7x7/Avg Enrichment 2.12/Avg Gadolinia  .070/Discrete
Generated by IDSGEN  0:- on  5-May-98 at 14:26:29 by Process 17385
Fuel Rod Type Map
 3  3  2  2  2  2  3
 3  2  2  1  1  1  2
 2  2  5  1  1  1  1
 2  1  1  1  1  4  1
 2  1  1  1  1  1  1
 2  1  1  4  1  1  1
 3  2  1  1  1  1  2
Density Value(s)
10.420,10.420,10.420,10.290,10.390
Fuel Material Compositions
Index   1 12
92,.50c,234, .00018
92,.50c,235, .02177
92,.50c,236, .00010
92,.50c,238, .85942
8,.50c,16, .11853
64,.50c,152, .00000
64,.50c,154, .00000
64,.50c,155, .00000
64,.50c,156, .00000
64,.50c,157, .00000
64,.50c,158, .00000
64,.50c,160, .00000
Index   2 12
92,.50c,234, .00012
92,.50c,235, .01499
92,.50c,236, .00007
92,.50c,238, .86631
8,.50c,16, .11852
64,.50c,152, .00000
64,.50c,154, .00000
64,.50c,155, .00000
64,.50c,156, .00000
64,.50c,157, .00000
64,.50c,158, .00000
64,.50c,160, .00000
Index   3 12
92,.50c,234, .00008
92,.50c,235, .01058
92,.50c,236, .00005
92,.50c,238, .87078
8,.50c,16, .11851
64,.50c,152, .00000
64,.50c,154, .00000
64,.50c,155, .00000
64,.50c,156, .00000
64,.50c,157, .00000
64,.50c,158, .00000
64,.50c,160, .00000
```

Figure 4-3 (cont'd)

```
Index   4 12
92,.50c,234, .00018
92,.50c,235, .02112
92,.50c,236, .00010
92,.50c,238, .83364
8,.50c,16, .11894
64,.50c,152, .00005
64,.50c,154, .00056
64,.50c,155, .00380
64,.50c,156, .00528
64,.50c,157, .00406
64,.50c,158, .00649
64,.50c,160, .00579
Index   5 12
92,.50c,234, .00018
92,.50c,235, .02166
92,.50c,236, .00010
92,.50c,238, .85512
8,.50c,16, .11859
64,.50c,152, .00001
64,.50c,154, .00009
64,.50c,155, .00063
64,.50c,156, .00088
64,.50c,157, .00068
64,.50c,158, .00108
64,.50c,160, .00096
```

Figure 4-4 Example Dataset for Unexposed Fuel, Smeared

```
GE 7x7/Avg Enrichment 2.12/Avg Gadolinia  .070/Smeared
Generated by IDSGEN  0:- on  5-May-98 at 14:24:13 by Process 17359
Fuel Rod Type Map
 1  1  1  1  1  1  1
 1  1  1  1  1  1  1
 1  1  1  1  1  1  1
 1  1  1  1  1  1  1
 1  1  1  1  1  1  1
 1  1  1  1  1  1  1
 1  1  1  1  1  1  1
Density Value(s)
10.414
Fuel Material Compositions
12
92,.50c,234, .00015
92,.50c,235, .01866
92,.50c,236, .00009
92,.50c,238, .86143
8,.50c,16, .11854
64,.50c,152, .00000
64,.50c,154, .00002
64,.50c,155, .00017
64,.50c,156, .00023
64,.50c,157, .00018
64,.50c,158, .00028
64,.50c,160, .00025
```

Worksheet 4-1 Assumed Lattice Parameters

Symbol	Description	Value	Units	Source	NAME
NLAT	Lattice Dimensionality	7	n/a	[a]	NLAT
NTYPE	Number of Distinct Fuel Types	5	n/a	[b]	NTYPE
NTI	Number of Each Lattice Type	27	n/a	[b]	
		14	n/a		
		5	n/a		
		2	n/a		
		1	n/a		
DENSITY	Stack Density	10.42	g/cm^3	[c]	DENSITY
		10.42	g/cm^3		
		10.42	g/cm^3		
		10.29	g/cm^3		
		10.39	g/cm^3		
PELOD	Pellet Outer Diameter	0.488	inches	[c]	PELOD
		0.488	inches		
		0.488	inches		
		0.487	inches		
		0.487	inches		
ENRICH	Enrichment	2.47	w/o	[b]	ENRICH
		1.70	w/o		
		1.20	w/o		
		2.47	w/o		
		2.47	w/o		
GDCON	Gadolinia Concentration	0.0	w/o	[b]	GDCON
		0.0	w/o		
		0.0	w/o		
		3.0	w/o		
		0.5	w/o		
AREA	Pellet Cross-sectional Area	1.206693	cm^2	[d].	AREA
		1.206693	cm^2		
		1.206693	cm^2		
		1.201753	cm^2		
		1.201753	cm^2		

[a]. This values is from the EPRI Report, Table 1.
[b]. This values is from the EPRI Report, Figure 1.
[c]. This values is from the EPRI Report, Table 4.
[d]. AREA = $(\pi/4)\cdot PELOD^2$

Worksheet 4-2 Assumed Atomic Weights and Natural Abundances

Isotope/ Element	Atomic Weight (g/ atom) AW_i	Natural Abundance (a/o) NA_i	Natural Abundance (w/o)
^{152}Gd	151.919788 [a]	0.200000 [a]	0.193218 [c]
^{154}Gd	153.920862 [a]	2.180000 [a]	2.133818 [c]
^{155}Gd	154.922619 [a]	14.800000 [a]	14.580756 [c]
^{156}Gd	155.922119 [a]	20.470000 [a]	20.296870 [c]
^{157}Gd	156.923957 [a]	15.650000 [a]	15.617341 [c]
^{158}Gd	157.924100 [a]	24.840000 [a]	24.946148 [c]
^{160}Gd	159.927050 [a]	21.860000 [a]	22.231849 [c]
Gd	157.25 [b]	100.00	100.00
^{234}U	234.040947 [a]		
^{235}U	235.043924 [a]		
^{236}U	236.045563 [a]		
^{238}U	238.050785 [a]		
Oxygen	15.999400 [a]		

[a]. These values are from the *Chart of the Nuclides* (Reference 6.9).

[b]. Computed as $AW_{Gd} = \dfrac{\sum \left(AW_{Gd_i} \cdot NA_i\right)}{100.0}$

[c]. Computed as $NA_i(w/o) = \dfrac{\left(AW_{Gd_i} \cdot NA_i\right)}{AW_{Gd}}$

Worksheet 4-3 Computation of Isotopic Weight Fractions for Unexposed Fuel

	Uranium Metal						
Type Index	Weight Percentage ^{234}U	Weight Percentage ^{235}U	Weight Percentage ^{236}U	Weight Percentage ^{238}U	Atomic Weight of U	Molecular Weight of UO_2	Molecular Weight of Gd_2O_3
1	0.0206	2.47	0.0114	97.4980	237.975	269.974	362.502
2	0.0137	1.70	0.0078	98.2784	237.999	269.998	362.502
3	0.0094	1.20	0.0055	98.7851	238.014	270.013	362.502
4	0.0206	2.47	0.0114	97.4980	237.975	269.974	362.502
5	0.0206	2.47	0.0114	97.4980	237.975	269.974	362.502

Type Index	Mass (g/cm)	Gd_2O_3 Mass (g/cm)	UO_2 Mass (g/cm)	Gd_2O_3 Mass (g atom/cm)	UO_2 Mass (g atom/cm)	U Mass (g atom/cm)	O Mass (g atom/cm)
1	339.4911	0.0000	339.4911	0.0000	1.2575	1.2575	2.5150
2	176.0324	0.0000	176.0324	0.0000	0.6520	0.6520	1.3040
3	62.8687	0.0000	62.8687	0.0000	0.2328	0.2328	0.4657
4	24.7321	0.7420	23.9901	0.0020	0.0889	0.0889	0.1839
5	12.4862	0.0624	12.4238	0.0002	0.0460	0.0460	0.0926

Type Index	Gd Mass (g atom/cm)	U Mass (g/cm)	Gd Mass (g/cm)	O Mass (g/cm)	Total Mass (g/cm)
1	0.0000	299.253	0.000	40.238	339.4911
2	0.0000	155.170	0.000	20.862	176.0324
3	0.0000	55.418	0.000	7.450	62.8687
4	0.0041	21.147	0.644	2.942	24.7321
5	0.0003	10.951	0.054	1.481	12.4862

Isotopic Linear Loadings

Type Index	^{234}U	^{235}U	^{236}U	^{238}U	O
1	0.0616	7.3915	0.0340	291.7656	40.2383
2	0.0213	2.6379	0.0121	152.4986	20.8625
3	0.0052	0.6650	0.0031	54.7450	7.4505
4	0.0044	0.5223	0.0024	20.6176	2.9417
5	0.0023	0.2705	0.0012	10.6773	1.4808

Total Mass (g/cm)
339.4911
176.0324
62.8687
24.7321
12.4862

Type Index	^{152}Gd	^{154}Gd	^{155}Gd	^{156}Gd	^{157}Gd	^{158}Gd	^{160}Gd
1	0.0000	0.0000	0.0000	0.0000	0.0000	0.0000	0.0000
2	0.0000	0.0000	0.0000	0.0000	0.0000	0.0000	0.0000
3	0.0000	0.0000	0.0000	0.0000	0.0000	0.0000	0.0000
4	0.0012	0.0137	0.0939	0.1307	0.1005	0.1606	0.1431
5	0.0001	0.0012	0.0079	0.0110	0.0085	0.0135	0.0120

Table 4-3 (cont'd)

Isotopic Fractions by Rod Type

Type Index	^{234}U	^{235}U	^{236}U	^{238}U	O	Total
1	0.00018	0.02177	0.00010	0.85942	0.11853	1.0000
2	0.00012	0.01499	0.00007	0.86631	0.11852	1.0000
3	0.00008	0.01058	0.00005	0.87078	0.11851	1.0000
4	0.00018	0.02112	0.00010	0.83364	0.11894	1.0000
5	0.00018	0.02166	0.00010	0.85512	0.11859	1.0000

Type Index	^{152}Gd	^{154}Gd	^{155}Gd	^{156}Gd	^{157}Gd	^{158}Gd	^{160}Gd
1	0.00000	0.00000	0.00000	0.00000	0.00000	0.00000	0.00000
2	0.00000	0.00000	0.00000	0.00000	0.00000	0.00000	0.00000
3	0.00000	0.00000	0.00000	0.00000	0.00000	0.00000	0.00000
4	0.00005	0.00056	0.00380	0.00528	0.00406	0.00649	0.00579
5	0.00001	0.00009	0.00063	0.00088	0.00068	0.00108	0.00096

Isotopic Fractions for Lattice

^{234}U	^{235}U	^{236}U	^{238}U	O	Total
0.00015	0.01866	0.00009	0.86143	0.11854	1.00000

^{152}Gd	^{154}Gd	^{155}Gd	^{156}Gd	^{157}Gd	^{158}Gd	^{160}Gd
0.00000	0.00002	0.00017	0.00023	0.00018	0.00028	0.00025

4.2. Exposed Fuel

For exposed fuel, the inventory is always smeared over all the fuel rods in the lattice or sub-lattice.

The input deck for this sample lattice is shown in Figure 4-5. The Fuel Material Intermediate Dataset created by this IDSGEN run is shown in Figure 4-6.

Figure 4-5 Example Input Deck for Exposed Case

```
$FUEL
  OPTION = 1
  NLAT = 8
  MDEX = 'G'
  DB_NAME = 'complete_nuclide_list.db'
  NDNAME = 'QC2A04N02DC12T142AC13T000.cut'
  NTYPE = 8
  NOGAD = 0
  NOFPGD = 0
  CUT = 1
  FADEX = 1
  NODE = 2
  HEIGHT = 6
  SMEAR = 1
$END
Stack Densities
8*10.3
Pellet Outer Diameters
8*0.411
Enrichments
1.50 2.00 2.40 2.80 3.00 3.30 3.80 3.95
Gadolinia Concentrations
4*0.0 3.0 3*0.0
Fuel Rod Type Map
  1  2  3  4  4  4  3  2
  2  3  4  6  5  7  6  3
  3  4  7  8  8  8  5  4
  4  6  8  8 -1  8  8  7
  4  5  8 -1  8  8  8  7
  4  7  8  8  8  8  5  6
  3  6  5  8  8  5  8  4
  2  3  4  7  7  6  4  3
```

Figure 4-6 Dataset for Exposed Fuel

```
GE 8x8/Avg Enrichment  3.19/Avg Gadolinia   .290/Exposed Fuel
 Generated by IDSGEN  0:- on  4-May-98 at 10:27:42 by Process  7050
 Fuel Rod Type Map
  1  1  1  1  1  1  1  1
  1  1  1  1  1  1  1  1
  1  1  1  1  1  1  1  1
  1  1  1  1 -1  1  1  1
  1  1  1 -1  1  1  1  1
  1  1  1  1  1  1  1  1
  1  1  1  1  1  1  1  1
  1  1  1  1  1  1  1  1
 Density Value(s)
 19.098
 Fuel Material Compositions
  69
   1,.50c,  3,6.4104E-06
   2,.50c,  4,1.5126E-05
   8,.50c, 16,1.1854E+01
  33,.35c, 75,1.8007E-05
  36,.50c, 82,6.2424E-05
  36,.50c, 83,6.5665E-03
  36,.50c, 84,1.8367E-02
  36,.50c, 86,3.0371E-02
  39,.50c, 89,7.5028E-02
  40,.50c, 93,7.5028E-02
  42,.50c, 95,1.1824E-01
  43,.50c, 99,1.2485E-01
  44,.50c,101,1.1668E-01
  44,.50c,103,3.2172E-04
  45,.50c,103,7.1667E-02
  46,.50c,105,5.1860E-02
  46,.50c,108,1.7647E-02
  47,.50c,109,1.1548E-02
  54,.50c,131,6.9986E-02
  54,.35c,134,2.2809E-01
  55,.50c,133,1.8367E-01
  55,.50c,135,6.4944E-02
  56,.50c,138,1.9687E-01
  59,.50c,141,1.7166E-01
  60,.50c,143,1.2365E-01
  60,.50c,145,1.0672E-01
  60,.50c,147,1.1464E-06
  60,.50c,148,5.5101E-02
  61,.50c,147,2.1128E-02
  61,.50c,148,1.3925E-07
  62,.50c,147,2.6170E-02
  62,.50c,149,2.3649E-04
  62,.50c,150,3.9735E-02
  62,.50c,151,1.5846E-03
  62,.50c,152,2.1368E-02
  63,.55c,151,9.9878E-06
  63,.50c,152,1.0696E-05
  63,.55c,153,1.5366E-02
  63,.50c,154,2.0288E-03
  63,.50c,155,6.2424E-04
  64,.50c,152,1.2005E-05
```

```
64,.50c,154,4.4057E-04
64,.50c,155,3.6254E-05
64,.50c,156,8.2951E-03
64,.50c,157,6.1583E-06
64,.50c,158,1.8487E-03
64,.50c,160,1.2125E-04
67,.55c,165,6.0023E-06
90,.50c,232,1.1308E-08
92,.50c,233,1.6566E-08
92,.50c,234,3.1692E-02
92,.50c,235,1.4646E+00
92,.50c,236,6.9026E-01
92,.50c,237,3.9495E-08
92,.50c,238,1.6806E+02
93,.50c,237,4.7778E-02
94,.50c,238,1.4405E-02
94,.55c,239,6.5545E-01
94,.50c,240,3.3132E-01
94,.50c,241,1.2485E-01
94,.50c,242,5.6181E-02
95,.50c,241,1.2725E-02
95,.50c,242,1.6206E-04
95,.50c,243,7.6709E-03
96,.50c,242,6.8546E-04
96,.35c,243,2.1848E-05
96,.50c,244,1.3205E-03
96,.35c,245,2.8451E-05
96,.35c,246,2.4009E-06
```

5. Integration Testing

Integration testing of the proper operation of this software routine can only be performed in the context of the entire process whereby lattice depletion is performed with SAS2H and a CRC model is built in MCNP.

6. References

6.1 *CRC Depletion Calculations for Quad Cities Unit 2*, DI#: B00000000-01717-0210-00009 REV 00, CRWMS M&O. MOL.19980730.0510.

6.2 *Software Qualification Report for the SCALE Modular Code System Version 4.3*, SCALE Version 4.3 Computer Software Configuration Item (CSCI): 30011 V4.3, DI#: 30011-2002 REV 00, CRWMS M&O. MOL.19970804.0240.

6.3 Briesmeister, J. F., Ed., *MCNP™ – A General Monte Carlo N-Particle Transport Code, Version 4A*, LA-12625-M, Los Alamos National Laboratory (LANL), November 1993. TIC #: 233782.

6.4 Briesmeister, J. F., Ed., *MCNP™ – A General Monte Carlo N-Particle Transport Code, Version 4B*, LA-12625-M, Los Alamos National Laboratory (LANL), March 1997. MOL.19980624.0328.

6.5 *Software Qualification Report for MCNP 4A, A General Monte Carlo N-Particle Transport Code*, CSCI: 30006-2003 REV 02, CRWMS M&O. MOL.19961028.0272.

6.6 *Software Qualification Report for MNCP 4B2, A General Monte Carlo N-Particle Transport Code*, CSCI: 30006 V4B2LV, DI#: 30033-2003 REV 01, CRWMS M&O. MOL.19980622.0637.

6.7 *SCALE-4 Analysis of Pressurized Water Reactor Critical Configurations: Volume 4 – Three Mile Island Unit 1 Cycle 5*, ORNL/TM-12294/V4, ORNL, March 1995. MOL.19960821.0245.

6.8 *Core Design and Operating Data for Cycles 1 and 2 of Quad Cities 1*, EPRI NP-240, Electric Power Research Institute, Palo Alto, CA, November 1976. TIC #: 237267.

6.9 *Nuclides and Isotopes (Incorporating the Chart of the Nuclides)*, 14th Edition, General Electric Company, San Jose, CA, 1989. TIC #: 201637.

Table of Contents

Contents Page

1. Introduction 4

2. Specifications 6

2.1. Definition of Control Blade Absorber Tubes 6
2.2. Definition of Control Blade Tie Rod 6
2.3. Definition of Control Blade Sheath 6
2.4. Integration of Components 6

3. Encoding of Process 13

4. References 15

List of Figures

Figure	Contents	Page
Figure 1-1	Cross-sectional Geometry for D-lattice BWR Control Blade	5
Figure 2-1	Components of Control Blade Absorber Tube	7
Figure 2-2	Tie Rod Surfaces	8
Figure 2-3	Sheath Pictures	8
Figure 2-4	Universe Definitions	9
Figure 3-1	Flowchart for Creating Control Blade Model	14

List of Worksheets

Worksheet	Contents	Page
Worksheet 2-1	Computation of Internal Variables from Dataset Variables	10
Worksheet 2-2	Computation of Surface Values	11
Worksheet 2-3	Definition of Cells	12

1. Introduction

This attachment describes the methodology used to create control blade models for use in MCNP (References 4.1, 4.2, 4.3 and 4.4) representations of BWR cores. The methodology assumes the existence of a dataset describing the blade geometry that has been generated according to the requirements of Attachment V.

The geometry of a typical BWR control blade is shown in Figure 1-1. The coding within the linkage automation is intended to be sufficiently robust to readily model all the varieties of the GE "Original Equipment" control blade (i.e., those blade initially deployed with the initial core of the reactor).

Figure 1-1 Cross-sectional Geometry for D-lattice BWR Control Blade

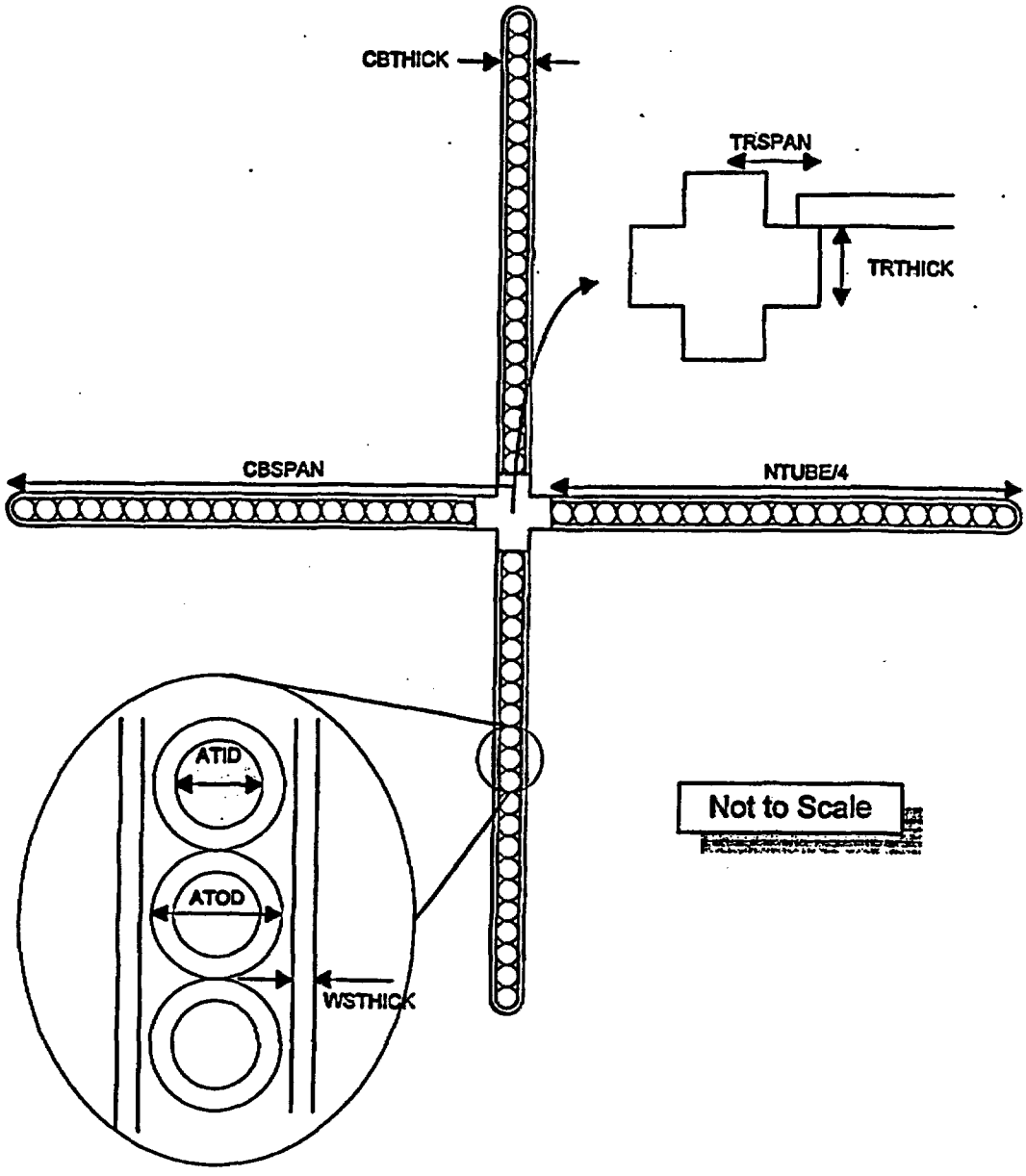

2. Specifications

This process must include the following functions:

- process data obtained from the blade geometry dataset (this processing is described in Attachment VI of this document);
- algorithms to create the various components of control blade; and
- integrate the models for the various components into a unified control blade model.

The illustrative calculations shown in this attachment are consistent with a GE D-lattice Original Equipment control blade and the basis values are shown in Attachment V. Processing of these values into variables used in the software routine are shown in Worksheet 2-1, while the cell and universe definitions are shown in Worksheet 2-3. Note that this is provided to illustrate the process whereby an MNCP model of the control blade is constructed and may not correspond to exactly any model used in subsequent calculations; however, given the given the blade geometry definition, the same process is used to obtain the control blade model.

2.1. Definition of Control Blade Absorber Tubes

The absorber tubes of a BWR Control Blade are comprised of stainless steel absorber tubes filled with vibratory-compacted boron carbide (Reference 4.5) as shown in Figure 2-1. Computation of the values for the absorber tubes defining surfaces is shown in Worksheet 2-2, while the cell and universe definitions are shown in Worksheet 2-3.

2.2. Definition of Control Blade Tie Rod

The stainless steel tie rod forms the central structural member of the control blade. A schematic depiction of a cross section of the tie rod is shown in Figure 2-2. Computation of the values for the tie rod surfaces is shown in Worksheet 2-2, while the cell and universe definitions are shown in Worksheet 2-3.

2.3. Definition of Control Blade Sheath

The control blade sheath surrounds the absorber tubes and provides lateral support and containment for them. A schematic depiction of a cross section of the sheath is shown in Figure 2-3. Computation of the values for the sheath surfaces is shown in Worksheet 2-2, while the cell and universe definitions are shown in Worksheet 2-3.

2.4. Integration of Components

The combination of the blade components into a complete model is illustrated in Figure 2-4. The universe symbolic names are from Worksheet 2-3.

Figure 2-1 Components of Control Blade Absorber Tube

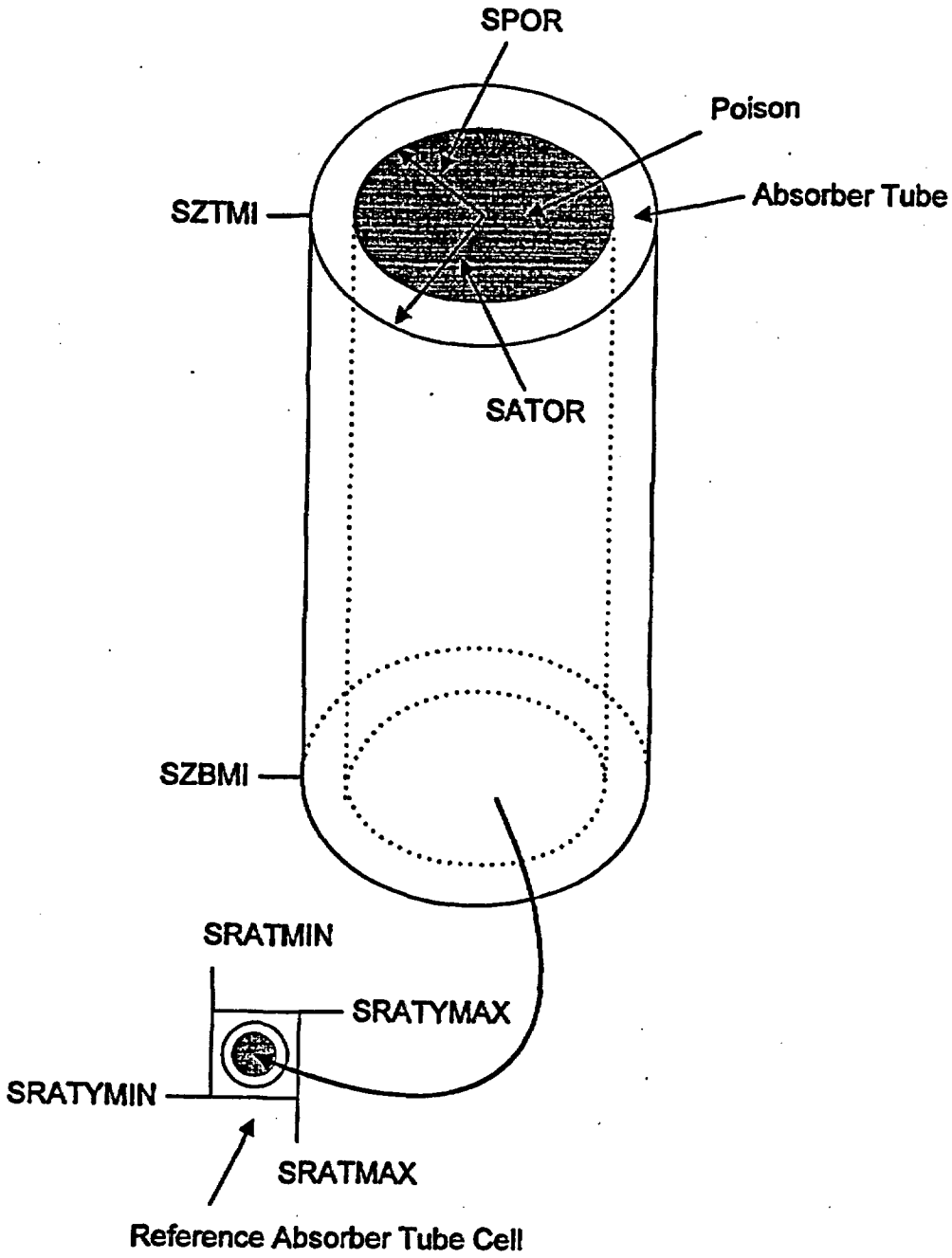

Figure 2-2 Tie Rod Surfaces

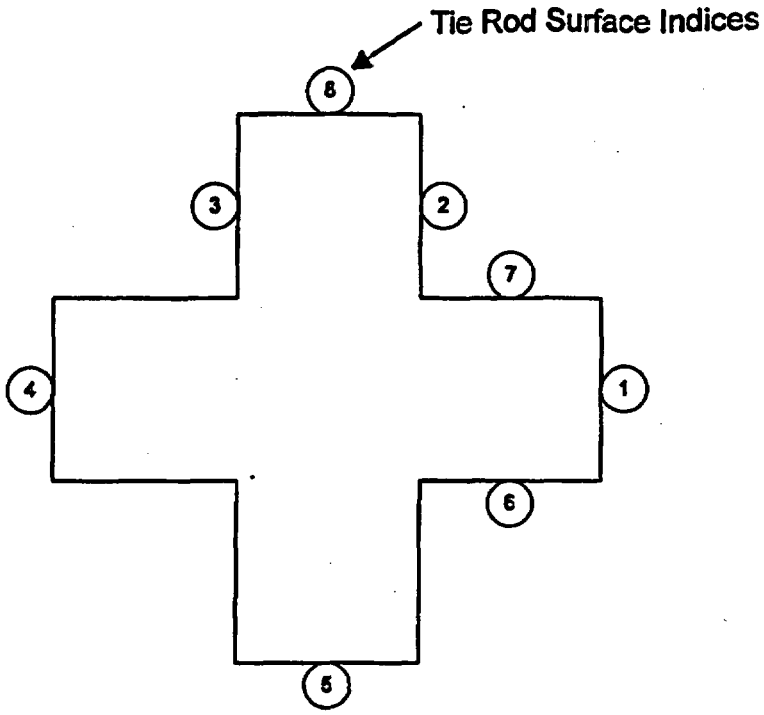

Figure 2-3 Sheath Pictures

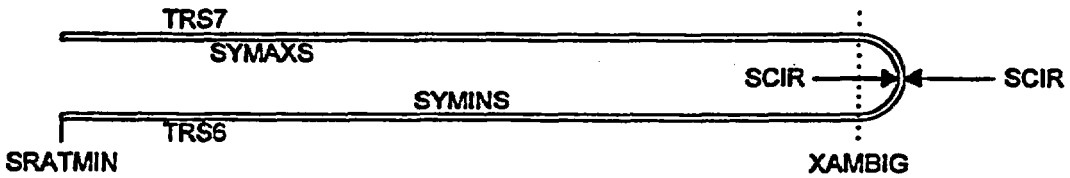

Figure 2-4 Universe Definitions

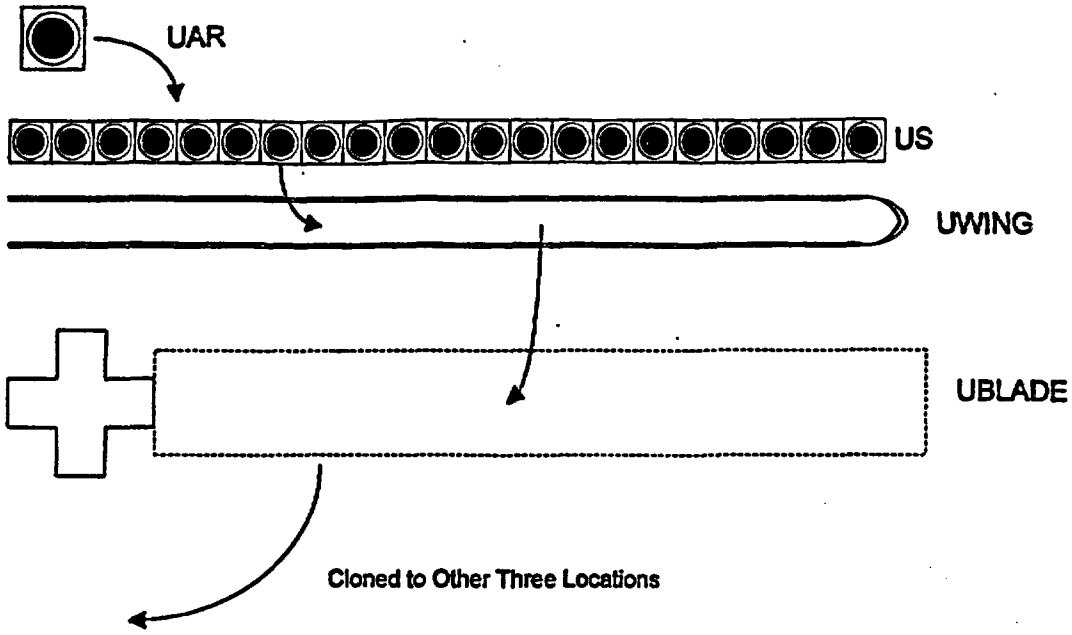

Worksheet 2-1 Computation of Internal Variables from Dataset Variables

Definition	Symbol	Value	Units	Computation
Poison Tip when Fully Inserted	ZTMI	365.76	cm	= 144*2.54
Poison Bottom when Fully Inserted	ZBMI	2.54	cm	= ZTMI-CBLENGTH
Boron Carbide Poison Outer Radius	POR	0.1753	cm	= ATID/2
Absorber Tube Outer Radius	ATOR	0.2388	cm	= ATOD/2
Inner Surface of Sheath Corner	XCORN	11.8745	cm	= CBSPAN-TRTHICK
Tube Field Span	TFS	9.6895	cm	= XCORN-TRSPAN
XMAX Surface of Reference Absorber Cell	ACMAX	2.4559	cm	= (TFS/(NTUBE/4))+TRSPAN
Center for Reference Absorber Tube	X0	2.2205	cm	= (ACMAX+TRSPAN)/2
Ambiguity Surface for Sheath Corner	XAMBIG	11.6390	cm	= TRSPAN+((NTUBE/4)-0.5)*(ACMAX-TRSPAN)

Worksheet 2-2 Computation of Surface Values

Index	Symbol	Definitions	Mnemonic	Parameters	Computation
1	SZTMI	Top of Absorber Column	pz	365.7600	= ZTMI
2	SZBMI	Bottom of Absorber Column	pz	2.5400	= ZBMI
3	SPOR	Reference Boron Carbide Outer Radius	c/z	2.2205	= X0
				0.0000	On Axis
				0.1753	= POR
4	SATOR	Reference Absorber Tube Outer Radius	c/z	2.2205	= X0
				0.0000	On Axis
				0.2388	= ATOR
5	SRATMAX	XMAX for Reference Absorber Tube Cell	px	2.4559	= ACMAX
6	SRATMIN	XMIN for Reference Absorber Tube Cell	px	1.9850	= TRSPAN
7	SRATYMAX	YMAX for Reference Absorber Tube	py	0.5080	= TRTHICK
8	SRATYMIN	YMIN for Reference Absorber Tube	py	-0.5080	= -TRTHICK
9	TRS2	Tie Rod Surface #2	px	0.6502	= TRTHICK+WSTHICK
10	TRS3	Tie Rod Surface #3	px	-0.6502	= -(TRTHICK+WSTHICK)
11	TRS4	Tie Rod Surface #4	px	-1.9850	= -TRSPAN
12	TRS5	Tie Rod Surface #5	py	-1.9850	= -TRSPAN
13	TRS6	Tie Rod Surface #6	py	-0.6502	= -(TRTHICK+WSTHICK)
14	TRS7	Tie Rod Surface #7	py	0.6502	= TRTHICK+WSTHICK
15	TRS8	Tie Rod Surface #8	py	1.9850	= TRSPAN
16	SAMBIG	Ambiguity Surface for Sheath Corner	px	11.6390	= XAMBIG
17	SCOR	Outer Surface of Sheath Corner	c/z	11.6390	= XAMBIG
				0.0000	On Axis
				0.6502	= TRTHICK+WSTHICK
18	SCIR	Inner Surface of Sheath Corner	c/z	11.6390	= XAMBIG
				0.0000	On Axis
				0.5080	= TRTHICK
19	SXMINBW	XMIN for Blade Window	px	1.9950	= TRSPAN+0.01
20	SXMAXBW	XMAX for Blade Window	px	12.3925	= CBSPAN+0.01
21	SYMINBW	YMIN for Blade Window	py	-0.6602	= -(TRTHICK+WSTHICK+0.01)
22	SYMAXBW	YMAX for Blade Window	py	0.6602	= TRTHICK+WSTHICK+0.01
23	SXMINSI	XMIN for Sheath Interior	px	6.0010	= SRATMIN+001
24	SYMAXSI	YMAX for Sheath Interior	py	6.9990	= SRATYMAX-0.001
25	SYMINSI	YMIN for Sheath Interior	py	7.9990	= SRATYMIN-0.001

Worksheet 2-3 Definition of Cells

Index	Symbol	Universe	Symbol	Definition
1	CBC	1	UAR	Boron Carbide in Reference Absorber Tube
2	CAT	1		Reference Absorber Tube
3	CIM	1		Moderator Outside Reference Absorber Tube
4	CRAT	2	US	Reference Absorber Tube Cell
5	CTR	3	UBLADE	Tie Rod
6	CS	4	UWING	Control Blade Sheath
7		4		Inside of Control Blade Sheath
8	COW	4		Region Outside of Wing
9	CBW	3		Window for Wing of Blade
10	CCBN	3	UBLADE	Cloned Wing to North Position
11	CCBW	3		Cloned Wing to West Position
12	CCBS	3		Cloned Wing to South Position
13	n/a	3		Region Outside of Blade

Worksheet 2-3 (cont'd)

Index	Symbol	Cell Definition
1	CBC	-3 -1 2 u= 1
2	CAT	3 -4 -1 2 u= 1
3	CIM	4 -1 2 u= 1
4	CRAT	-5 6 -7 8 -1 2 lat = 1 u = 1fill = 0:20 0:0 0:0 1 20r
5	CTR	(13 -14 -6 11 -1 2):(10 -9 12 -15 -1 2) u= 3
6	CS	(6 -16 7 -14 -1 2):(6 -16 -8 13 -1 2):(16 18 -17 -1 2) u= 4
7	0	(23 -24 25):(16 -18) u= 4
8	COW	#4 #6 u= 4
9	CBW	19 -20 21 -22 fill= 4
10	CCBN	like 9 but *trcl=(0 0 0 90 0 90 180 90 90 90 90 0) u= 3
11	CCBW	like 9 but *trcl=(0 0 0 180 90 90 -90 180 90 90 90 0) u= 3
12	CCBS	like 9 but *trcl=(0 0 0 -90 180 90 0 -90 90 90 90 0) u= 3
13	n/a	#5 #9 #10 #11 #12 u= 3

3. Encoding of Process

The flowchart for the coding to implement the specification is shown in Figure 3-1. This logic has been implemented as a C language function named build_control_blade.

Figure 3-1 Flowchart for Creating Control Blade Model

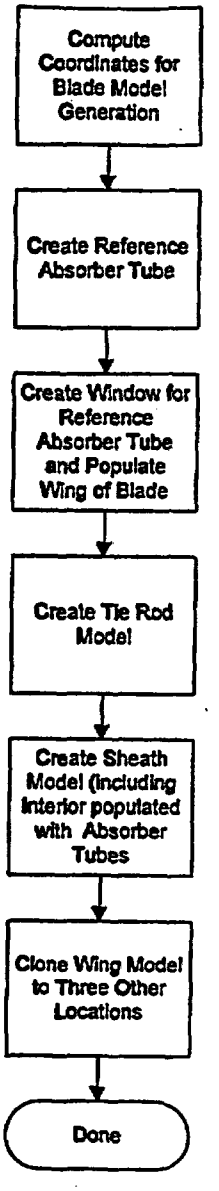

4. References

4.1 Briesmeister, J. F., Ed., *MCNP™ – A General Monte Carlo N-Particle Transport Code, Version 4A*, LA-12625-M, Los Alamos National Laboratory (LANL), November 1993. TIC #: 233782.

4.2 Briesmeister, J. F., Ed., *MCNP™ – A General Monte Carlo N-Particle Transport Code, Version 4B*, LA-12625-M, Los Alamos National Laboratory (LANL), March 1997. MOL.19980624.0328.

4.3 *Software Qualification Report for MNCP 4B2, A General Monte Carlo N-Particle Transport Code*, Computer Software Configuration Identifier (CSCI): 30006 V4B2LV, DI#: 30033-2003 REV 01, CRWMS M&O. MOL.19980622.0637.

4.4 *Software Qualification Report for MNCP 4A, A General Monte Carlo N-Particle Transport Code*, CSCI: 30006 V4A, DI#: 30006-2003 REV 02, CRWMS M&O. MOL.19961028.0272.

4.5 *Core Design and Operating Data for Cycles 1 and 2 of Quad Cities 1*, EPRI NP-240, Electric Power Research Institute, Palo Alto, CA, November 1976. TIC #: 237267.

Table of Contents

Contents Page

1. Introduction 4

2. Specifications 5

2.1. Definition of Fuel Rods 5
2.2. Definition of Fuel Lattice 5
2.3. Definition of Fuel Channel 5
2.4. Integration of Components 5

3. Encoding of Process 12

3.1. Driver Function 12
3.2. Lattice-preparation Function 12

4. References 16

List of Figures

Figure	Contents	Page
Figure 2-1	Fuel Rod	6
Figure 2-2	Lattice Population	7
Figure 2-3	Channel	8
Figure 2-4	Integration of Components into Lattice	9
Figure 3-1	Flowchart for Lattice Model Generation Driver Function	13
Figure 3-2	Flowchart for Creation of GE 7x7 Lattice	14

List of Worksheets

Worksheet	Contents	Page
Worksheet 2-1	Computation of Surface Coordinates	10
Worksheet 2-2	Cell Definitions	11

1. Introduction

This attachment describes the methodology used to create fuel lattice models for use in MCNP (References 4.1, 4.2, 4.3 and 4.4) representations of Boiling Water Reactor (BWR) cores. The methodology assumes the existence of a dataset describing the blade geometry that has been generated according to the requirements of Attachment V.

The driver coding within the linkage automation is intended to be sufficiently robust to readily model all the varieties BWR fuel. Specific models for each lattice design are required. In this case, the model for a GE 7x7 fuel lattice is described.

2. Specifications

This process must include the following functions:

- process data obtained from the lattice geometry dataset (this processing is described in Attachment VI of this document);
- govern the generation of lattice model for each unique lattice in the core (lattices are differentiated by geometry and material composition of the fuel rods within the lattice);
- algorithms to create the various components of the lattice; and
- integrate the various components into a unified model for the lattice.

The illustrative calculations shown in this attachment are consistent with a GE 7x7 lattice and the basis values are shown in Attachment IV. Note that the values shown herein do not necessarily correspond to a particular lattice used in the analyses, but are shown to illustrate the process whereby such an MCNP is constructed.

2.1. Definition of Fuel Rods

The fuel rods are comprised of zircaloy tubes filled with UO_2 ceramic pellets (Reference 4.5) as shown in Figure 2-1. Computation of the values for the absorber tubes defining surfaces is shown in Worksheet 2-1, while the cell and universe definitions are shown in Worksheet 2-2.

2.2. Definition of Fuel Lattice

The fuel rods fill a regular lattice. In the case of the GE 7x7 fuel design, there are no water rods which displace fuel rods (see Figure 2-2). For the case of lattices with water rods, locations within the lattice will be filled with water rods – or perhaps water rod segments.

2.3. Definition of Fuel Channel

The channel is assumed to be of uniform thickness with rounded corners as shown in Figure 2-3. The assumption of constant thickness is also assumed for those channel designs that incorporate variations in the wall thickness to increase the water mass in the bypass region (viz., GE's "interactive" channel). For such channels, the thickness is selected to maintain the same areal density of zirconium. Computation of the values for the channel defining surfaces is shown in Worksheet 2-1, while the cell and universe definitions are shown in Worksheet 2-2.

2.4. Integration of Components

The combination of the lattice components into a complete model is illustrated in Figure 2-4.

Figure 2-1 Fuel Rod

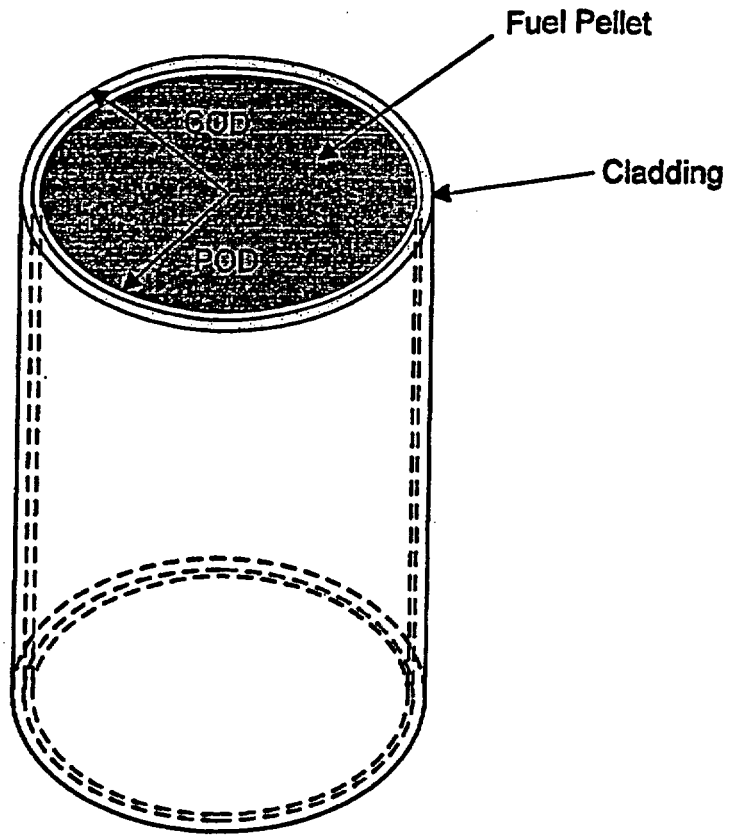

Figure 2-2 Lattice Population

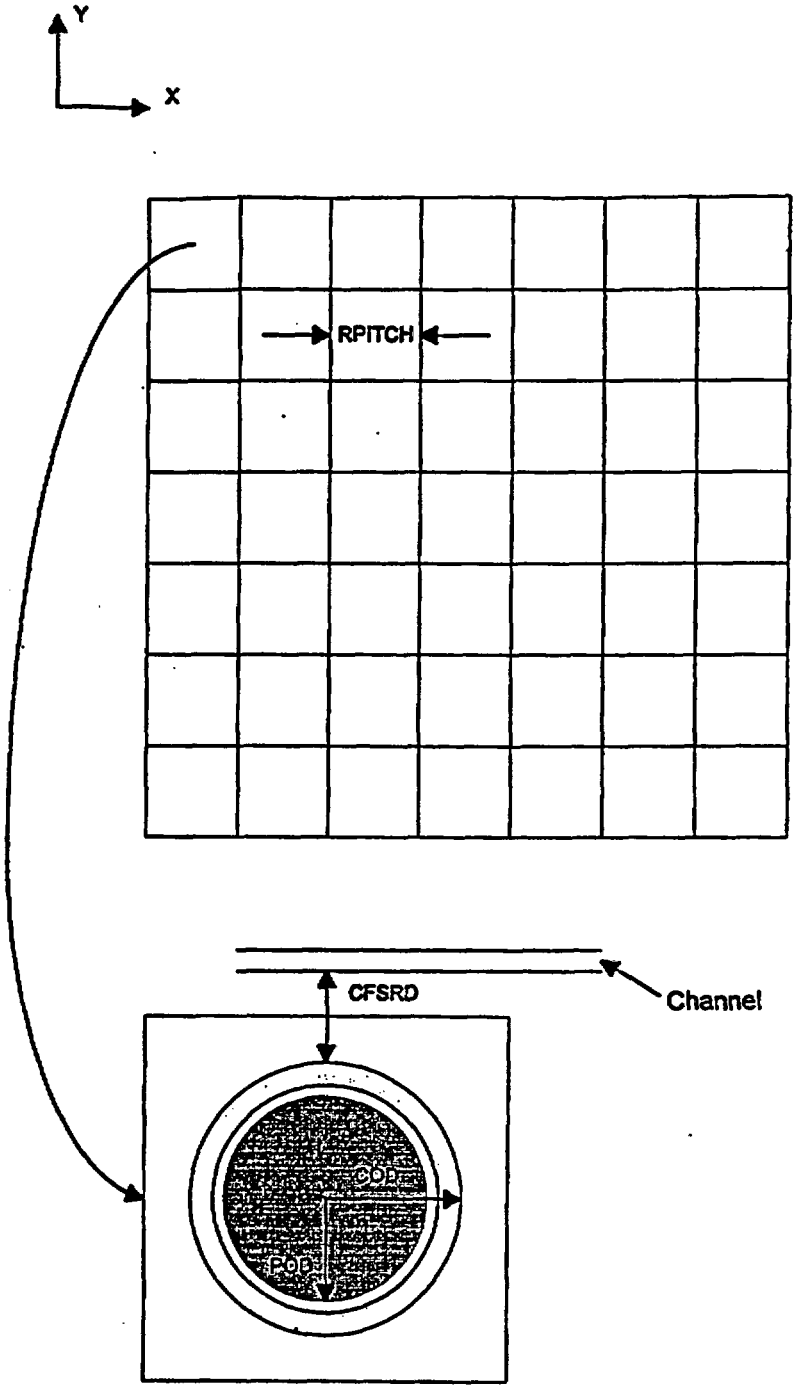

Figure 2-3 Channel

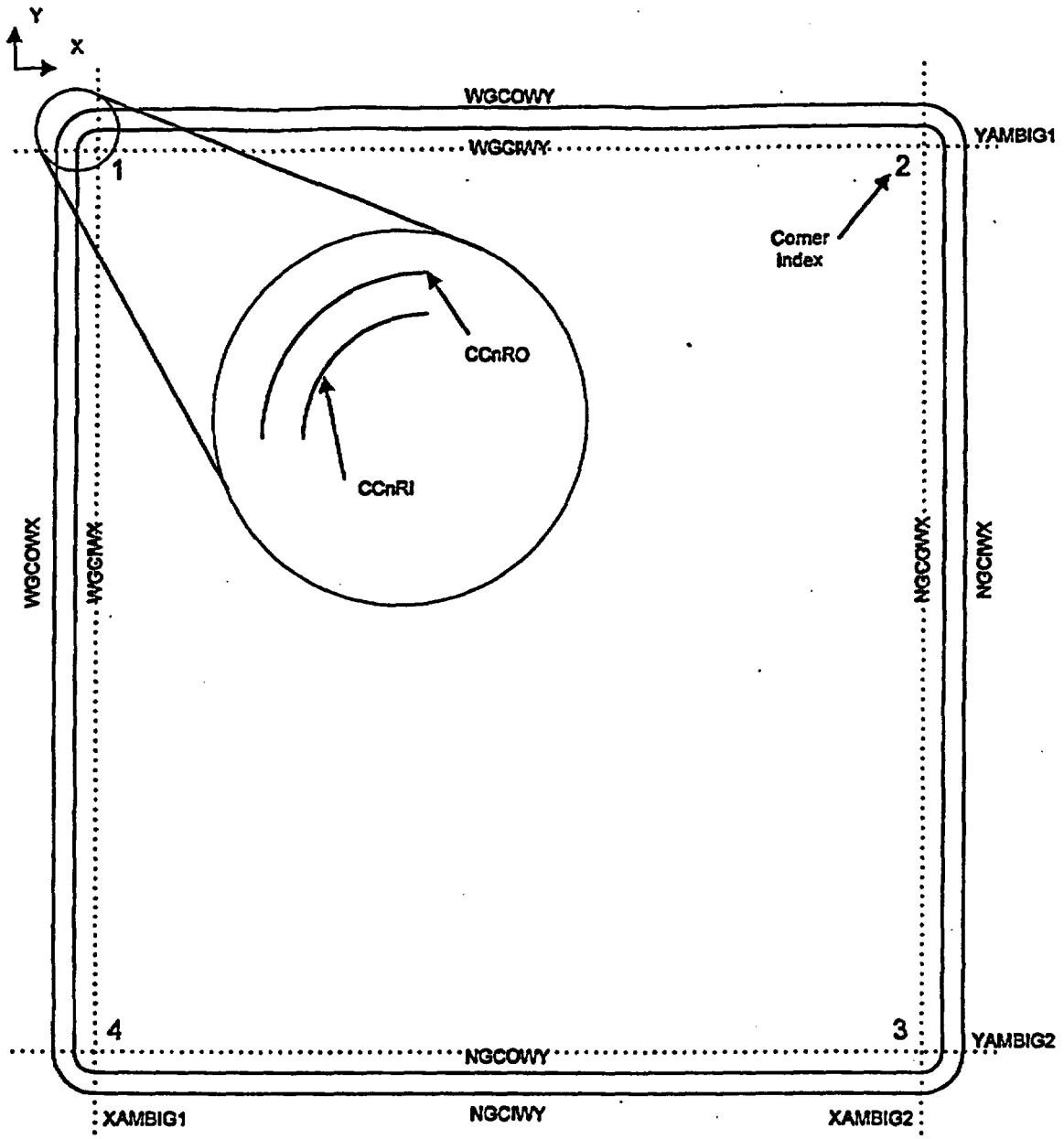

Figure 2-4 Integration of Components into Lattice

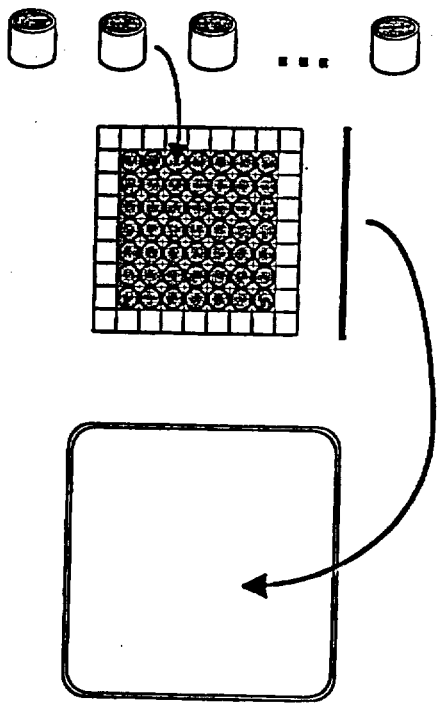

Worksheet 2-1 Computation of Surface Coordinates

Index	Symbol	Definition	Mnemonic	Parameters	Computation
1	SPOR	Reference Fuel Pellet Outer Surface	c/z	2.2352	= WGAP+CTHICK+CFSRD+(COD/2)
				-2.2352	= -(WGAP+CTHICK+CFSRD+(COD/2))
				0.6198	= POD/2
2	SCIR	Reference Cladding Inner Surface	c/z	2.2352	= WGAP+CTHICK+CFSRD+(COD/2)
				-2.2352	= -(WGAP+CTHICK+CFSRD+(COD/2))
				0.63373	= (COD/2)-CLD
3	SCOR	Reference Cladding Outer Surface	c/z	2.2352	= WGAP+CTHICK+CFSRD+(COD/2)
				-2.2352	= -(WGAP+CTHICK+CFSRD+(COD/2))
				0.7150	= COD/2
4	XMINFRW	XMIN Surface for Fuel Rod Window	px	-0.9373	= -(RPITCH/2)
5	XMAXFRW	XMAX Surface for Fuel Rod Window	px	0.9373	= RPITCH/2
6	YMINFRW	XMIN Surface for Fuel Rod Window	py	-0.9373	= -(RPITCH/2)
7	YMAXFRW	XMAX Surface for Fuel Rod Window	py	0.9373	= RPITCH/2
8	WGCOWX	Wide Gap, Channel Outside Wall, pX Surface	px	0.9525	= WGAP
9	WGCIWX	Wide Gap, Channel Inside Wall, pX Surface	px	1.1557	= WGAP+CTHICK
10	NGCIWX	Narrow Gap, Channel Inside Wall, pX Surface	px	6.4337	= WGAP+CTHICK+ASIN
11	NGCOWX	Narrow Gap, Channel Outside Wall, pX Surface	px	6.6369	= WGAP+(2*CTHICK)+ASIN
12	WGCOWY	Wide Gap, Channel Outside Wall, pY Surface	py	-0.9525	= -WGAP
13	WGCIWY	Wide Gap, Channel Inside Wall, pY Surface	py	-1.1557	= -(WGAP+CTHICK)
14	NGCIWY	Narrow Gap, Channel Inside Wall, pY Surface	py	-6.4337	= -(WGAP+CTHICK+ASIN)
15	NGCOWY	Narrow Gap, Channel Outside Wall, pY Surface	py	-6.6369	= -(WGAP+(2*CTHICK)+ASIN)
16	XAMBIG1	Ambiguity Surface for Channel Corners (Wide Gap)	px	2.1717	= WGAP+CTHICK+CRADIUS
17	XAMBIG2	Ambiguity Surface for Channel Corners (Narrow Gap)	px	5.4177	= WGAP+CTHICK+ASIN-CRADIUS
18	YAMBIG1	Ambiguity Surface for Channel Corners (Wide Gap)	py	-2.1717	= -(WGAP+CTHICK+CRADIUS)
19	YAMBIG2	Ambiguity Surface for Channel Corners (Narrow Gap)	py	-5.4177	= -(WGAP+CTHICK+ASIN-CRADIUS)
20	CC1RO	Outer Radius for Corner 1	c/z	2.1717	= WGAP+CTHICK+CRADIUS
				-2.1717	= -(WGAP+CTHICK+CRADIUS)
				1.2192	= CRADIUS+CTHICK
21	CC1RI	Inner Radius for Corner 1	c/z	2.1717	= WGAP+CTHICK+CRADIUS
				-2.1717	= -(WGAP+CTHICK+CRADIUS)
				1.016	= CRADIUS
22	CC2RO	Outer Radius for Corner 2	c/z	5.4177	= WGAP+CTHICK+ASIN-CRADIUS

Index	Symbol	Definition	Mnemonic	Parameters	Computation
				-2.1717	= -(WGAP+CTHICK+CRADIUS)
				1.2192	= CRADIUS+CTHICK
23	CC2RI	Inner Radius for Corner 2	c/z	5.4177	= WGAP+CTHICK+ASIN-CRADIUS
				-2.1717	= -(WGAP+CTHICK+CRADIUS)
				1.016	= CRADIUS
24	CC3RO	Outer Radius for Corner 3	c/z	5.4177	= WGAP+CTHICK+ASIN-CRADIUS
				-5.4177	= -(WGAP+CTHICK+ASIN-CRADIUS)
				1.2192	= CRADIUS+CTHICK
25	CC3RI	Inner Radius for Corner 3	c/z	5.4177	= WGAP+CTHICK+ASIN-CRADIUS
				-5.4177	= -(WGAP+CTHICK+ASIN-CRADIUS)
				1.016	= CRADIUS
26	CC4RO	Outer Radius for Corner 4	c/z	2.1717	= WGAP+CTHICK+CRADIUS
				-5.4177	= -(WGAP+CTHICK+ASIN-CRADIUS)
				1.2192	= CRADIUS+CTHICK
27	CC4RI	Inner Radius for Corner 4	c/z	2.1717	= WGAP+CTHICK+CRADIUS
				-5.4177	= -(WGAP+CTHICK+ASIN-CRADIUS)
				1.016	= CRADIUS

Worksheet 2-2 Cell Definitions

Index	Symbol	Universe	Symbol	Definition	Cell Definition
1	CFP	1	UFR	Fuel Pellet	-1 u= 1
2	CFCG	1		Pellet-Cladding Gap	-2 1 u= 1
3	CFRC	1		Cladding	-3 2 u= 1
4	CMOFR	1		Moderator Outside Fuel Rod	3 u= 1
5	CWFRL	2	UFRL	Window for Fuel Rod (Lattice)	4 -5 6 -7 u= 2 fill= 1
6	CCHAN	3	UCHAN	Channel	(8 -9 -18 19):(-12 13 16 -17): (-14 15 16 -17):(10 -11 -18 19): (-20 21 18 -16):(-22 23 18 17): (-24 25 17 -19):(-26 27 -19 -16) u= 3
7	CWIC	3		Water Inside Channel	(16 -17 -13 14):(9 -16 -18 19): (17 -10 -18 19):(-21 -16 18): (-23 17 19):(-25 17 -19):(27 -16 -19) u= 3 fill= 2
8	CWOC	3		Water Outside Channel	#7 #6 u= 3

3. Encoding of Process

There are two distinct parts of the process for creating lattice models. The first is a driver function that manages the selection of the appropriate data for the lattice and second is a lattice-geometry-specific function that creates the detailed lattice model.

3.1. Driver Function

The driver function ensures that the appropriate lattice geometry and lattice material composition datasets are selected for the subject lattice. Once this information has been staged, the function selects the function corresponding to the lattice geometry design and calls that function to create the detailed lattice model. The logical flow of this function is shown in Figure 3-1.

3.2. Lattice-preparation Function

This function is specific to a particular lattice design. For instance, GE 7x7 and GE 8x8 lattices require different functions since they are different in geometrical layout. Further, different varieties of GE 8x8 lattices might require different functions since they can incorporate different numbers and sizes of water rods (i.e., fuel-rod-sized water rods, large water rods displacing two fuel rods, or a large-central water rod displacing four fuel rods). Fuel assemblies constructed by different manufacturers may also require different functions, even when the constituent lattices have the same lattice dimensionality. This is most likely due to details in the number, placement or shape of water rods.

The flowchart of this process for GE 7x7 fuel assemblies is shown in Figure 3-2.

Figure 3-1 Flowchart for Lattice Model Generation Driver Function

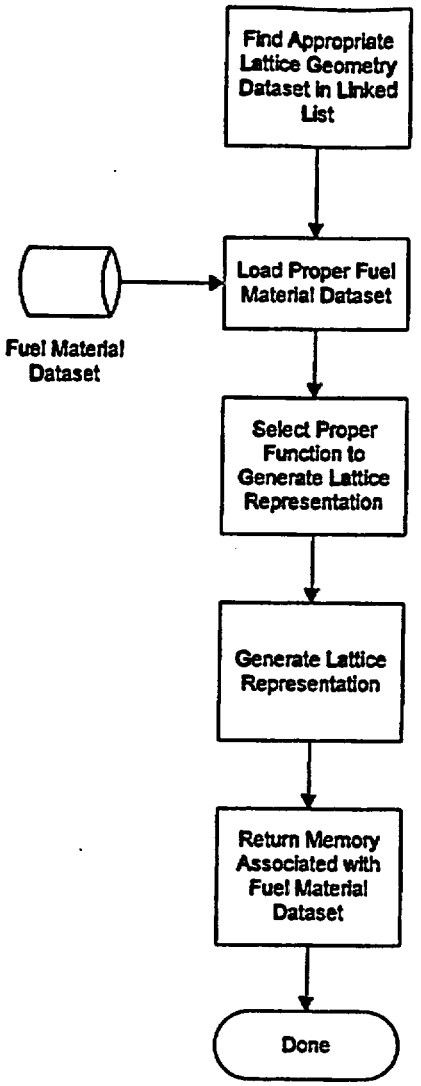

Figure 3-2 Flowchart for Creation of GE 7x7 Lattice

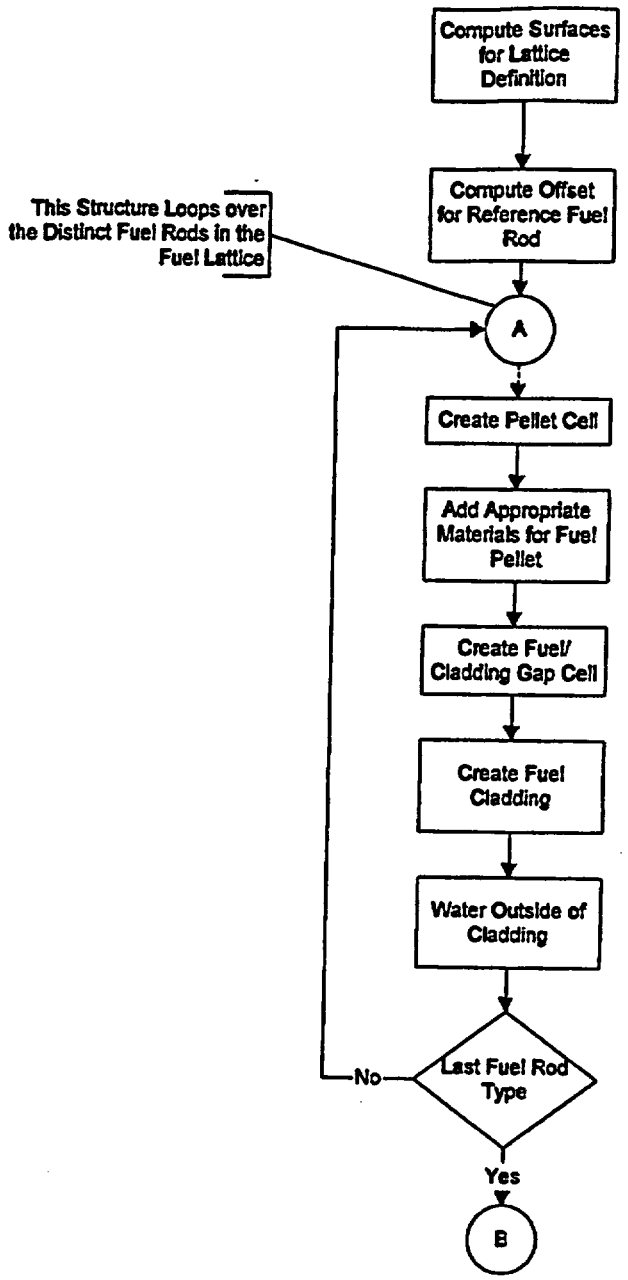

Figure 3-2 (cont'd)

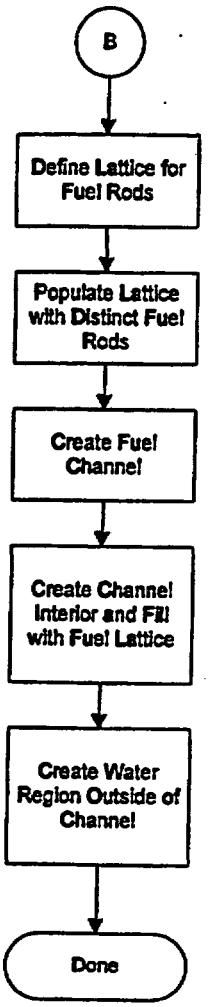

4. References

4.1 Briesmeister, J. F., Ed., *MCNP™ – A General Monte Carlo N-Particle Transport Code, Version 4A*, LA-12625-M, Los Alamos National Laboratory (LANL), November 1993. TIC #: 233782.

4.2 Briesmeister, J. F., Ed., *MCNP™ – A General Monte Carlo N-Particle Transport Code, Version 4B*, LA-12625-M, Los Alamos National Laboratory (LANL), March 1997. MOL.19980624.0328.

4.3 *Software Qualification Report for MNCP 4B2, A General Monte Carlo N-Particle Transport Code*, Computer Software Configuration Identifier (CSCI): 30006 V4B2LV, DI#: 30033-2003 REV 01, CRWMS M&O. MOL.19980622.0637.

4.4 *Software Qualification Report for MNCP 4A, A General Monte Carlo N-Particle Transport Code*, CSCI: 30006 V4A, Document Identifier: 30006-2003 REV 02, CRWMS M&O. MOL.19961028.0272.

4.5 *Core Design and Operating Data for Cycles 1 and 2 of Quad Cities 1*, EPRI NP-240, Electric Power Research Institute, Palo Alto, CA, November 1976. TIC #: 237267.

Table of Contents

Contents	Page
1. Introduction	4
2. Specifications	5
2.1. Definition of Fuel Rods	5
2.2. Definition of Fuel Lattice	5
2.3. Definition of Fuel Channel	5
2.4. Integration of Components	5
3. Encoding of Process	11
3.1. Driver Function	11
3.2. Lattice-preparation Function	11
4. References	14

List of Figures

Figure	Contents	Page
Figure 2-1	Fuel Rod	6
Figure 2-2	Lattice Population	7
Figure 2-3	Integration of Components Into Lattice	8
Figure 3-1	Flowchart for Creation of GE 8x78 Lattice with Small Water Rods	12

List of Worksheets

Worksheet	Contents	Page
Worksheet 2-1	Computation of Surface Coordinates	9
Worksheet 2-2	Cell Definitions	10

1. Introduction

This attachment describes the methodology used to create GE 8x8 (small water rods) fuel lattice models for use in MCNP (References 4.1, 4.2, 4.3 and 4.4) representations of Boiling Water Reactor (BWR) cores. The methodology assumes the existence of a dataset describing the blade geometry that has been generated according to the requirements of Attachment V.

The driver coding within the linkage automation is intended to be sufficiently robust to readily model all the varieties BWR fuel and is described in Attachment X. This attachment describes the modeling of a GE 8x8 fuel lattice with small water rods. Here "small" indicates that the water rod dimensions are identical to the fuel cladding dimensions.

2. Specifications

This process is a subset of the larger process described and illustrated in Attachment X and this attachment describes the particular processing for a GE 8x8 fuel lattice with small water rods (and for fuel assemblies designed and manufactured by other vendors which are consistent with this geometric representation). The basis values used in this attachment are shown in Attachment IV. Note that the values shown herein do not necessarily correspond to a particular lattice used in the analyses, but are shown to illustrate the process whereby such an MCNP is constructed.

2.1. Definition of Fuel Rods

The fuel rods are comprised of zircaloy tubes filled with UO_2 ceramic pellets (Reference 4.5) as shown in Figure 2-1. Computation of the values for the absorber tubes defining surfaces is shown in Worksheet 2-1, while the cell and universe definitions are shown in Worksheet 2-2.

2.2. Definition of Fuel Lattice

The fuel rods fill a regular lattice. In the case of the GE 8x8 fuel design with small water rods, one or more of these fuel rods are displaced with cladding hulls through which non-voided water flows (see Figure 2-2).

2.3. Definition of Fuel Channel

The channel is assumed to be of uniform thickness with rounded corners and is as described in Attachment X for a "D" lattice geometry.

2.4. Integration of Components

The combination of the lattice components into a complete model is illustrated in Figure 2-3.

Figure 2-1 Fuel Rod

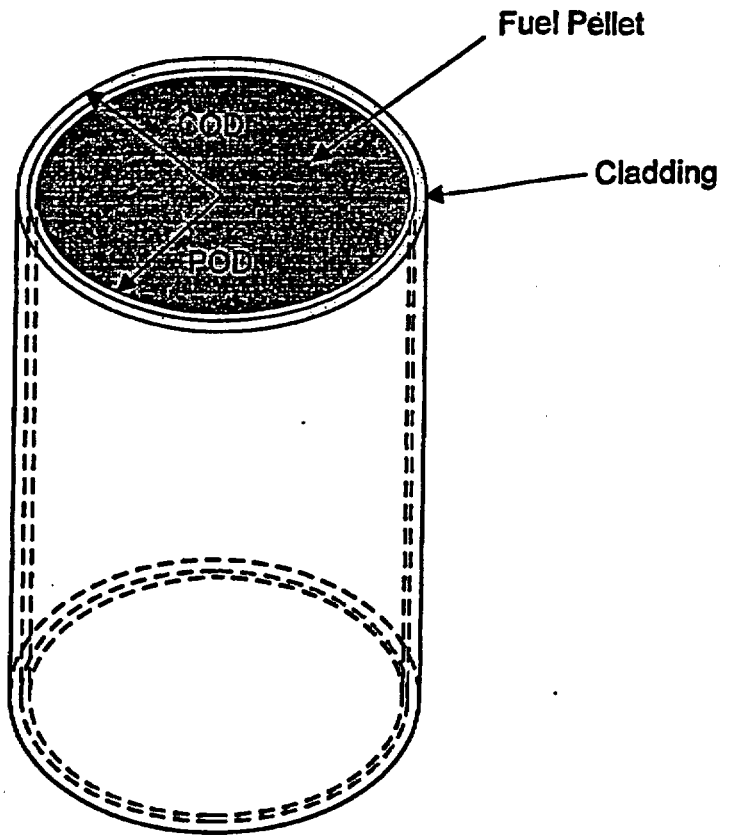

Figure 2-2 Lattice Population

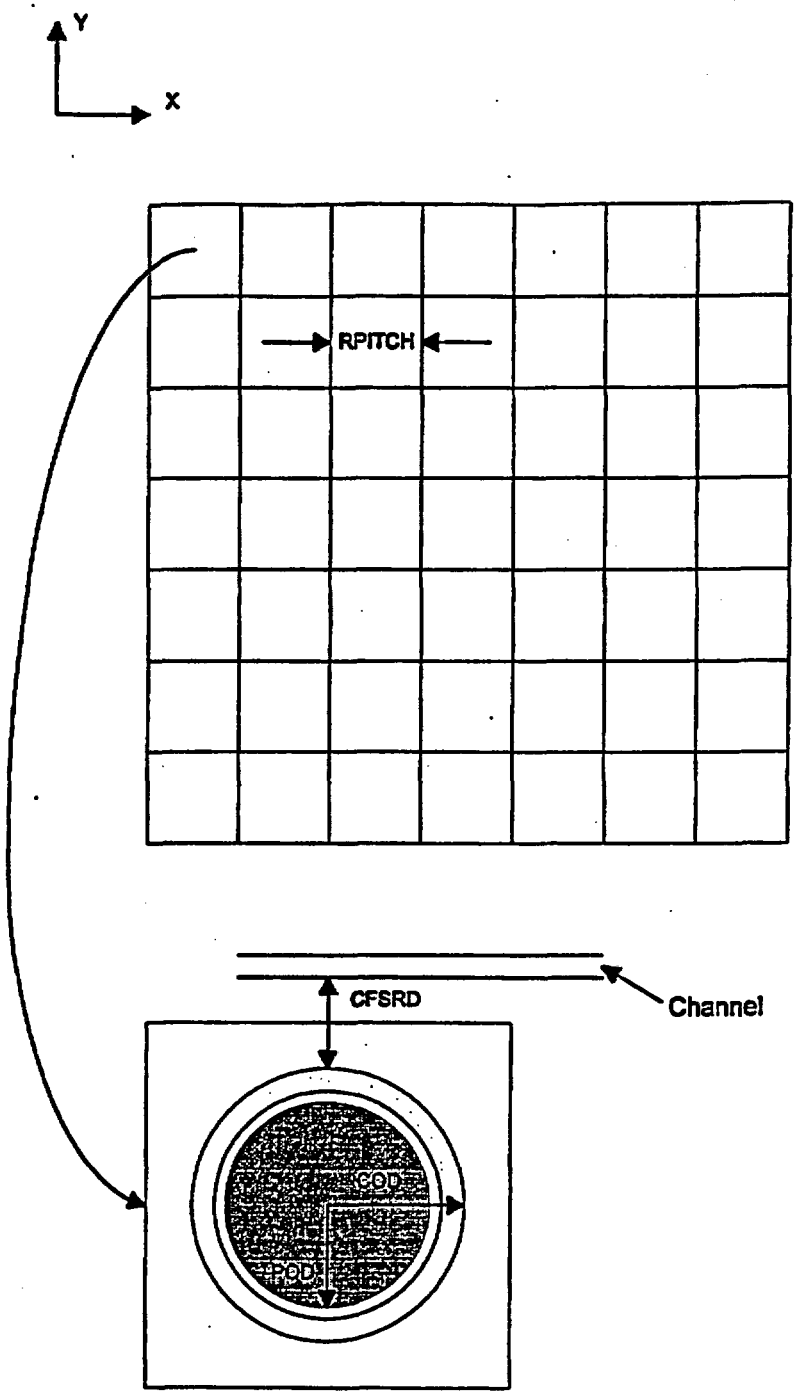

Figure 2-3 Integration of Components into Lattice

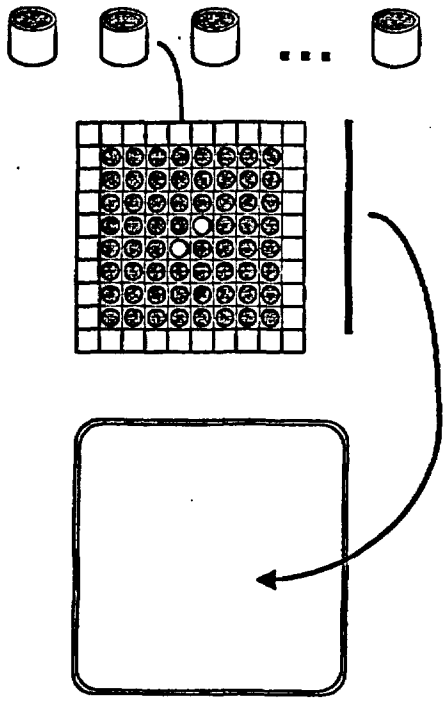

Worksheet 2-1 Computation of Surface Coordinates

Index	Symbol	Definition	Mnemonic	Parameters	Computation
1	SPOR	Reference Fuel Pellet Outer Surface	c/z	2.16916	= WGAP+CTHICK+CFSRD+(COD/2)
				-2.16916	= -(WGAP+CTHICK+CFSRD+(COD/2))
				0.5283	= POD/2
2	SCIR	Reference Cladding Inner Surface	c/z	2.16916	= WGAP+CTHICK+CFSRD+(COD/2)
				-2.16916	= -(WGAP+CTHICK+CFSRD+(COD/2))
				0.53975	= (COD/2)-CLD
3	SCOR	Reference Cladding Outer Surface	c/z	2.16916	= WGAP+CTHICK+CFSRD+(COD/2)
				-2.16916	= -(WGAP+CTHICK+CFSRD+(COD/2))
				0.62611	= COD/2
4	XMINFRW	XMIN Surface for Fuel Rod Window	px	-0.8128	= -(RPITCH/2)
5	XMAXFRW	XMAX Surface for Fuel Rod Window	px	0.8128	= RPITCH/2
6	YMINFRW	XMIN Surface for Fuel Rod Window	py	-0.8128	= -(RPITCH/2)
7	YMAXFRW	XMAX Surface for Fuel Rod Window	py	0.8128	= RPITCH/2
8	WGCOWX	Wide Gap, Channel Outside Wall, pX Surface	px	0.9525	= WGAP
9	WGCIWX	Wide Gap, Channel Inside Wall, pX Surface	px	1.1557	= WGAP+CTHICK
10	NGCIWX	Narrow Gap, Channel Inside Wall, pX Surface	px	14.56182	= WGAP+CTHICK+ASIN
11	NGCOWX	Narrow Gap, Channel Outside Wall, pX Surface	px	14.76502	= WGAP+(2*CTHICK)+ASIN
12	WGCOWY	Wide Gap, Channel Outside Wall, pY Surface	py	-0.9525	= -WGAP
13	WGCIWY	Wide Gap, Channel Inside Wall, pY Surface	py	-1.1557	= -(WGAP+CTHICK)
14	NGCIWY	Narrow Gap, Channel Inside Wall, pY Surface	py	-14.56182	= -(WGAP+CTHICK+ASIN)
15	NGCOWY	Narrow Gap, Channel Outside Wall, pY Surface	py	-14.76502	= -(WGAP+(2*CTHICK)+ASIN)
16	XAMBIG1	Ambiguity Surface for Channel Corners (Wide Gap)	px	2.1717	= WGAP+CTHICK+CRADIUS
17	XAMBIG2	Ambiguity Surface for Channel Corners (Narrow Gap)	px	13.54582	= WGAP+CTHICK+ASIN-CRADIUS
18	YAMBIG1	Ambiguity Surface for Channel Corners (Wide Gap)	py	-2.1717	= -(WGAP+CTHICK+CRADIUS)
19	YAMBIG2	Ambiguity Surface for Channel Corners (Narrow Gap)	py	-13.54582	= -(WGAP+CTHICK+ASIN-CRADIUS)
20	CC1RO	Outer Radius for Corner 1	c/z	2.1717	= WGAP+CTHICK+CRADIUS
				-2.1717	= -(WGAP+CTHICK+CRADIUS)
				1.2192	= CRADIUS+CTHICK
21	CC1RI	Inner Radius for Corner 1	c/z	2.1717	= WGAP+CTHICK+CRADIUS
				-2.1717	= -(WGAP+CTHICK+CRADIUS)
				1.016	= CRADIUS
22	CC2RO	Outer Radius for Corner 2	c/z	13.54582	= WGAP+CTHICK+ASIN-CRADIUS

Index	Symbol	Definition	Mnemonic	Parameters	Computation
				-2.1717	= -(WGAP+CTHICK+CRADIUS)
				1.2192	= CRADIUS+CTHICK
23	CC2RI	Inner Radius for Corner 2	c/z	13.54582	= WGAP+CTHICK+ASIN-CRADIUS
				-2.1717	= -(WGAP+CTHICK+CRADIUS)
				1.016	= CRADIUS
24	CC3RO	Outer Radius for Corner 3	c/z	13.54582	= WGAP+CTHICK+ASIN-CRADIUS
				-13.54582	= -(WGAP+CTHICK+ASIN-CRADIUS)
				1.2192	= CRADIUS+CTHICK
25	CC3RI	Inner Radius for Corner 3	c/z	13.54582	= WGAP+CTHICK+ASIN-CRADIUS
				-13.54582	= -(WGAP+CTHICK+ASIN-CRADIUS)
				1.016	= CRADIUS
26	CC4RO	Outer Radius for Corner 4	c/z	2.1717	= WGAP+CTHICK+CRADIUS
				-13.54582	= -(WGAP+CTHICK+ASIN-CRADIUS)
				1.2192	= CRADIUS+CTHICK
27	CC4RI	Inner Radius for Corner 4	c/z	2.1717	= WGAP+CTHICK+CRADIUS
				-13.54582	= -(WGAP+CTHICK+ASIN-CRADIUS)
				1.016	= CRADIUS

Worksheet 2-2 Cell Definitions

Index	Symbol	Universe	Symbol	Definition	Cell Definition
1	CFP	1	UFR	Fuel Pellet	-1 u= 1
2	CFCG	1		Pellet-Cladding Gap	-2 1 u= 1
3	CFRC	1		Cladding	-3 2 u= 1
4	CMOFR	1		Moderator Outside Fuel Rod	3 u= 1
5	CIWR	2	UWR	Water Inside Water Rod	-1 u= 2
6	CWR	2		Water Rod	-3 2 u= 2
7	CMOWR	2		Moderator Outside Water Rod	3 u= 2
8	CWFRL	3	UFRL	Window for Fuel Rod (Lattice)	4 -5 6 -7 u= 3 fill= 1 or fill= 2
9	CCHAN	4	UCHAN	Channel	(8 -9 -18 19):(-12 13 16 -17): (-14 15 16 -17):(10 -11 -18 19): (-20 21 18 -16):(-22 23 18 17): (-24 25 17 -19):(-26 27 -19 -16) u= 4
10	CWIC	4		Water Inside Channel	(16 -17 -13 14):(9 -16 -18 19): (17 -10 -18 19):(-21 -16 18): (-23 17 19):(-25 17 -19):(27 -16 -19) u= 4 fill= 3
11	CWOC	4		Water Outside Channel	#10 #9 u= 4

3. Encoding of Process

There are two distinct parts of the process for creating lattice models. The first is a driver function that manages the selection of the appropriate data for the lattice and second is a lattice-geometry-specific function that creates the detailed lattice model.

3.1. Driver Function

A description of this function is provided in Attachment X.

3.2. Lattice-preparation Function

A global description of this function is provided in Attachment X. The flowchart of this process for GE 8x8 fuel assemblies with small water rods is shown in Figure 3-1.

Figure 3-1 Flowchart for Creation of GE 8x8 Lattice with Small Water Rods

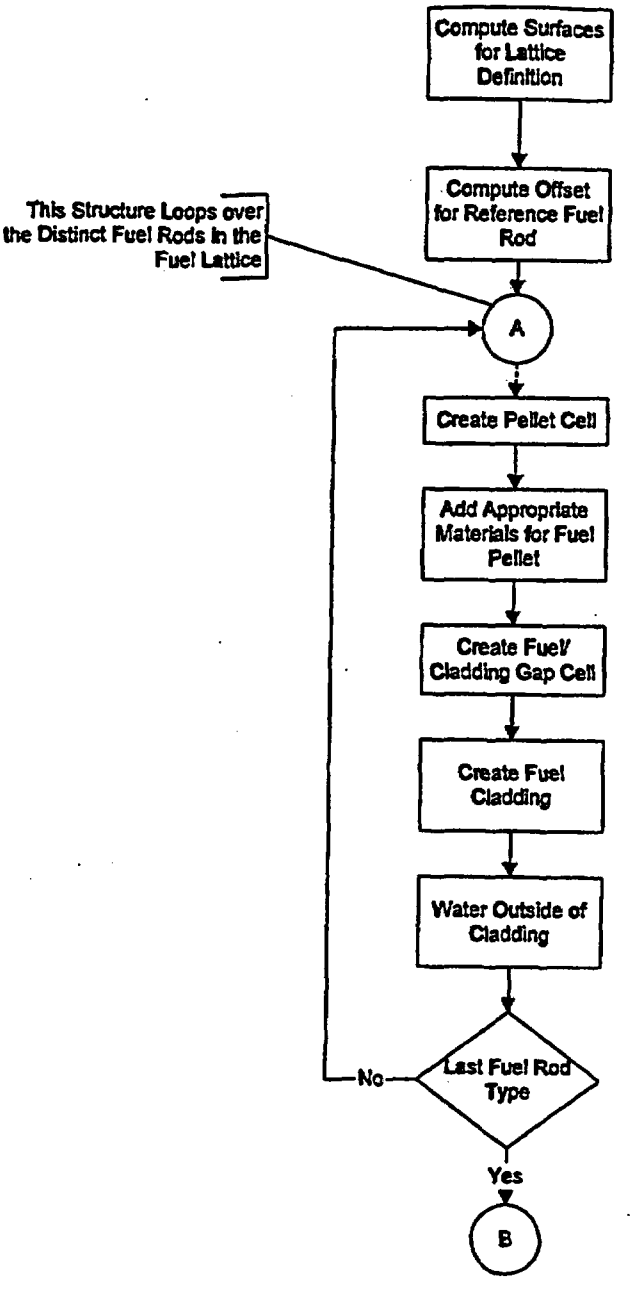

Figure 3-1 (cont'd)

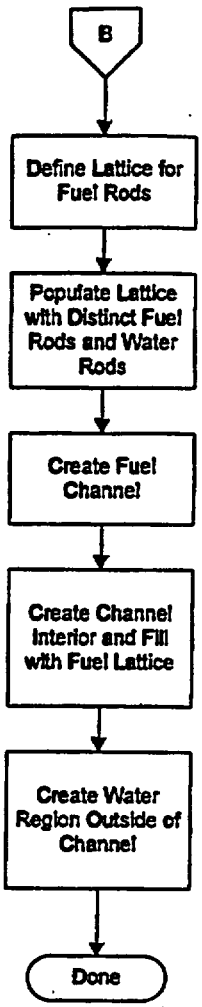

4. References

4.1 Briesmeister, J. F., Ed., *MCNP™ – A General Monte Carlo N-Particle Transport Code, Version 4A*, LA-12625-M, Los Alamos National Laboratory (LANL), November 1993. TIC #: 233782.

4.2 Briesmeister, J. F., Ed., *MCNP™ – A General Monte Carlo N-Particle Transport Code, Version 4B*, LA-12625-M, Los Alamos National Laboratory (LANL), March 1997. MOL.19980624.0328.

4.3 *Software Qualification Report for MNCP 4A, A General Monte Carlo N-Particle Transport Code*, CSCI: 30006 V4A, DI#: 30006-2003 REV 02, CRWMS M&O. MOL.19961028.0272.

4.4 *Software Qualification Report for MNCP 4B2, A General Monte Carlo N-Particle Transport Code*, CSCI: 30006 V4B2LV, DI#: 30033-2003 REV 01, CRWMS M&O. MOL.19980622.0637.

4.5 *Core Design and Operating Data for Cycles 1 and 2 of Quad Cities 1*, EPRI NP-240, Electric Power Research Institute, Palo Alto, CA, November 1976. TIC #: 237267.

Table of Contents

Contents	Page
1. Introduction	4
2. Construction of MCNP Input Streams	4
2.1. BLINK Input Specification	4
3. References	9

List of Figures

Figure	Contents	Page
Figure 2-1	BLINK Fuel Assembly Identifiers for QC1 Initial Core	5
Figure 2-2	Quarter-core Control Blade Position for QC1 BOL	8

List of Tables

Table	Contents	Page
Table 2-1	BLINK NAMELIST Input for BOL CRC Reactivity Analysis	6
Table 2-2	Spacer Locations	7

1. Introduction

This attachment describes the creation of the MCNP input streams to model the initial core critical for the Quad Cities Unit 1 core. Thus it documents the processing of Fuel Material Intermediate Datasets (FMID's) from lattice nuclear and geometric specifications and the preparation of input to BLINK, the linkage software routine used to prepare the MCNP input streams.

2. Construction of MCNP Input Streams

The documentation of this portion of the work consists of three parts:

1. identifying the relationship between BLINK fuel assemblies indices and the identifiers used for the unexposed fuel inventories;
2. specifying the various datasets used to construct the MCNP input streams and geometrical and thermodynamic parameters; and
3. defining the control blade positioning.

2.1. BLINK Input Specification

This startup test was performed at the beginning of the first cycle for Quad Cities Unit 1. This evaluation was performed to validate the linkage methodology described in Attachment VI. As such the results must be essentially the same as those obtained from a previous evaluation (Reference 3.1, hereafter cited as the "previous evaluation") where a "hand-crafted" MCNP model was used.

2.1.1. Correspondence of Fuel Assembly Identifiers

The BLINK fuel assembly indices are shown in Figure 2-1. These indices are the same as those used in the reference document for Quad Cities Unit 1 (Reference 3.2, hereafter cited to as the "EPRI Report").

The Fuel Material Intermediate Datasets (FMID's) are created with the IDSGEN software routine, which is documented in Attachment VIII. The SAS2H "cut" files processed in this manner have the following file name nomenclature: AaNn.dat – where "a" is the BLINK fuel assembly index and "n" is the axial node index.

Figure 2-1 BLINK Fuel Assembly Identifiers for QC1 Initial Core

	1	2	3	4	5	6	7	8	9	10	11	12	13	14	15
1											3	3	3	3	3
2										3	3	1	3	1	3
3							3	3	3	3	1	4	1	3	1
4						3	3	1	3	1	4	1	4	2	4
5					3	3	1	3	2	4	2	4	2	4	2
6				3	3	1	3	2	4	2	4	1	4	2	4
7			3	3	1	3	1	4	2	4	2	4	2	4	2
8			3	1	3	2	4	2	4	2	4	1	3	1	3
9			3	3	2	4	2	4	2	4	1	3	1	3	1
10		3	3	1	4	2	4	2	4	1	3	1	3	1	3
11	3	3	1	4	2	4	2	4	1	3	1	3	1	3	1
12	3	1	3	2	4	2	4	1	3	1	3	1	3	1	3
13	3	3	1	4	2	4	2	3	1	3	1	3	1	3	1
14	3	1	3	2	4	2	4	1	3	1	3	1	3	1	3
15	3	3	1	4	2	4	2	3	1	3	1	3	1	3	1

2.1.2. Dataset, Geometrical and Thermodynamic Input Values

These values are those documented in Attachment VI, §3.2. The specific values selected for the FORTRAN NAMELIST portion of input for this CRC are shown in Table 2-1. The values for the assignment of fuel assembly geometrical and material types and the underlying lattice geometric and material types are consistent with the fuel assembly indices. The axial node length was a constant value of 15.24 cm (6 inches). This value was explicitly used for the BLINK Version 1 testing, but was implicit for the Version 0 testing. The spacer centers are shown in Table 2-2. The material definition for the smear spacer composition is "SG7D1" and is defined in Attachment III.

Table 2-1 BLINK NAMELIST Input for BOL CRC Reactivity Analysis

Variable	Value	Justification/Reference
CORE_DB	bwr3_724bundle.dat [a]	See Attachment II for complete description of dataset
CORE_MTLS	core_materials.dat [a]	See Attachment III for complete description of dataset
BLADE_DB	ge_d_lattice.dat [a]	See Attachment V for complete description of dataset
LPREFIX	[b]	
FPREFIX	[b]	
NAXIAL	24	This is the number of axial nodes used in the SAS2H depletion calculations.
AFL	365.760	Fuel length is fixed to be 145.24 inches
NCOLP	15	Maximum dimensionality of the quarter core in units of fuel assemblies.
NROWP	15	Maximum dimensionality of the quarter core in units of fuel assemblies.
RHO	0.981 [d]	For this value, see Table 7.3.3-3 of the previous evaluation.
RHOBYP	0.981 [d]	The moderator density throughout the problem is assumed uniform, which is consistent with the startup conditions when the criticality test is performed.
TEMPK	337.04	This value corresponds to 147°F (see §7.1 of the previous evaluation).
MUTP	7GUTP1 [c]	A homogenized mixture of materials with an assumed moderator density of 0.981 g/cm^3 is used.
MLTP	7GLTP1 [c]	A homogenized mixture of materials with an assumed moderator density of 0.981 g/cm^3 is used.

[a]. The prefix is consistent with the location where the software routine is executed.
[b]. This input is consistent with location of FMID's processed for this analysis.
[c]. See Attachment III for a complete description of this composition.
[d]. The input to BLINK implies greater precision; however, the effect is negligible.

Table 2-2 Spacer Locations

	Spacer Center Location	
Index	(inches) [a]	(cm)
1	18.50	46.99
2	38.00	96.52
3	57.50	146.05
4	77.00	195.58
5	96.50	245.11
6	116.00	294.64
7	135.50	344.17

[a]. These values are from the EPRI Report, page A-8.

2.1.3. Control Blade Positions

The control blade positions at which the reactor attained criticality are shown in Figure 2-2. The core is modeled in quarter-core symmetry, but since the critical control blade pattern is quarter-core symmetric, no approximations were involved in the control blade pattern used.

Figure 2-2 Quarter-core Control Blade Position for QC1 BOL

	1	2	3	4	5	6	7	8
1						48	0	48
2				0	0	0	0	0
3			0	48	0	48	0	48
4		0	0	0	0	0	0	0
5		48	0	48	0	48	0	48
6	0	0	0	0	0	0	0	0
7	0	48	0	48	0	48	0	48
8	0	0	0	0	0	0	0	0

2.1.4. Input Deck Generated by BLINK

A copy of the input deck generated by BLINK, Version 0, is given in Attachment XIII.

3. References

3.1 *MCNP CRC Reactivity Calculation for Quad Cities BWR*, DI#: BBA000000-01717-0200-00146 REV 00, CRWMS M&O. MOL.19971229.0128.

3.2 *Core Design and Operating Data for Cycles 1 and 2 of Quad Cities 1*, EPRI NP-240, Electric Power Research Institute, Palo Alto, CA, November 1976. TIC #: 237267.

```
Quad Cities-1, Beginning of Life
c
c     Input Deck Generated by BLINK, Version  D:-
c     Generated on 03/23/98 at 16:26:43 by Process 20234
c
c     Cell Cards
c
c     Cells Defining Problem Domain
c
c     Pressure Vessel
 2001     1 -7.9000E+00 -1 2 -3 4 -5 6
      imp:n= 1.0
c     Outside World
 2002     0 ( 3: 1: -2: -4: 5)
      imp:n= 0.0
c     Jet Pump Region
 2003     2 -9.8114E-01 -6 7 4 -5 -1 2
      imp:n=1.0
c     Core Shroud
 2004     1 -7.9000E+00 -7 8 4 -5 -1 2
      imp:n=1.0
c     Upper Tie Plate Region
 2005     3 -1.3970E+00 -8 4 -5 9 -10
      imp:n=1.0
c     Core Grid Region
 2006     4 -1.0450E+00 -8 4 -5 10 -11
      imp:n=1.0
c     Upper Plenum Region
 2007     2 -9.8114E-01 -8 4 -5 11 -1
      imp:n=1.0
c     Lower Tie Plate Region
 2008     5 -1.3970E+00 -8 4 -5 -12 13
      imp:n=1.0
c     Fuel Support/Core Plate
 2009     6 -2.5430E+00 -8 4 -5 -13 14
      imp:n=1.0
c     Lower Plenum Region
 2010     2 -9.8114E-01 -8 4 -5 -14 2
      imp:n=1.0
c     Boron Carbide in Reference Absorber Tube
 2011     7 -1.7600E+00 -15
      imp:n=1.0 u= 1
c     Reference Absorber Tube
 2012     1 -7.9000E+00 -16 15
      imp:n=1.0 u= 1
c     Water Outside Reference Absorber Tube
 2013     2 -9.8114E-01 16
      imp:n=1.0 u= 1
c     Window for Reference Absorber Tube Cell
 2014     2 -9.8114E-01 -17 18 -19 20
      imp:n=1.0 u= 2 lat= 1 fill= 0:21 0:0 0:0 1 20r 2
c     Tie Rod
 2015     1 -7.9000E+00 ( -21 22 -18 23 -24 25):( 26 -27 28 -29 -24 25)
      imp:n=1.0 u= 3
c     Control Blade Sheath
 2016     1 -7.9000E+00 ( 18 -30 19 -21 -24 25):( 18 -30 -20 22 -24 25):
      ( 30 31 -32 -24 25 )
      imp:n=1.0 u= 4
c     Inside of Blade Wing
 2017     2 -9.8114E-01 ( 33 34 -35 -30 -24 25 ):(  -31 -24 25 )
      u= 4 fill= 2 imp:n= 1.0
c     Region Outside of Blade Wing
 2018     2 -9.8114E-01 #2016 #2017
      imp:n=1.0 u= 4
c     Window for Wing of Blade
    1     2 -9.8114E-01 36 -37 38 -39 fill= 4
      imp:n=1.0 u= 3
c     Wing Cloned to North Position
    2 like 1 but *trcl=( 0 0 0 90 0 90 180 90 90 90 90 0)
      u= 3
```

```
c     Wing Cloned to West Position
    3 like 1 but *trcl=( 0 0 0 180 90 90 -90 180 90 90 90 0)
      u= 3
c     Wing Cloned to South Position
    4 like 1 but *trcl=( 0 0 0 -90 180 90 0 -90 90 90 90 0)
      u= 3
c     Region Outside of Blade
 2019     2 -9.8114E-01 #2015 #1 #2 #3 #4
      imp:n=1.0 u= 3
c     Fuel Pellet, #1, L1
 2020     9 -1.0340E+01 -40       u= 5 imp:n= 1.0
c     Fuel/Cladding Gap, #1, L1
 2021     0 40 -41       u= 5 imp:n= 1.0
c     Cladding, #1, L1
 2022    10 -6.5600E+00 41 -42       u= 5 imp:n= 1.0
c     Water Outside Cladding #1, L1
 2023     8 -9.8114E-01 42
      u= 5 imp:n= 1.0
c     Fuel Pellet, #2, L1
 2024 like 2020 but
      mat= 11 rho= -9.9400E+00
      u= 6 imp:n= 1.0
c     Fuel/Cladding Gap, #2, L1
 2025 like 2021 but
      u= 6 imp:n= 1.0
c     Cladding, #2, L1
 2026 like 2022 but
      u= 6 imp:n= 1.0
c     Water Outside Cladding #2, L1
 2027 like 2023 but
      u= 6 imp:n= 1.0
c     Fuel Pellet, #3, L1
 2028 like 2020 but
      mat= 12 rho= -9.4800E+00
      u= 7 imp:n= 1.0
c     Fuel/Cladding Gap, #3, L1
 2029 like 2021 but
      u= 7 imp:n= 1.0
c     Cladding, #3, L1
 2030 like 2022 but
      u= 7 imp:n= 1.0
c     Water Outside Cladding #3, L1
 2031 like 2023 but
      u= 7 imp:n= 1.0
c     Fuel Pellet, #4, L1
 2032 like 2020 but
      mat= 13 rho= -1.0340E+01
      u= 8 imp:n= 1.0
c     Fuel/Cladding Gap, #4, L1
 2033 like 2021 but
      u= 8 imp:n= 1.0
c     Cladding, #4, L1
 2034 like 2022 but
      u= 8 imp:n= 1.0
c     Water Outside Cladding #4, L1
 2035 like 2023 but
      u= 8 imp:n= 1.0
c     Fuel Pellet, #5, L1
 2036 like 2020 but
      mat= 14 rho= -9.9400E+00
      u= 9 imp:n= 1.0
c     Fuel/Cladding Gap, #5, L1
 2037 like 2021 but
      u= 9 imp:n= 1.0
c     Cladding, #5, L1
 2038 like 2022 but
      u= 9 imp:n= 1.0
c     Water Outside Cladding #5, L1
 2039 like 2023 but
      u= 9 imp:n= 1.0
```

```
c     Fuel Pellet, #6, L1
 2040 like 2020 but
      mat= 15 rho= -9.9400E+00
      u= 10 imp:n= 1.0
c     Fuel/Cladding Gap, #6, L1
 2041 like 2021 but
      u= 10 imp:n= 1.0
c     Cladding, #6, L1
 2042 like 2022 but
      u= 10 imp:n= 1.0
c     Water Outside Cladding #6, L1
 2043 like 2023 but
      u= 10 imp:n= 1.0
c     Fuel Pellet, #7, L1
 2044 like 2020 but
      mat= 16 rho= -1.0300E+01
      u= 11 imp:n= 1.0
c     Fuel/Cladding Gap, #7, L1
 2045 like 2021 but
      u= 11 imp:n= 1.0
c     Cladding, #7, L1
 2046 like 2022 but
      u= 11 imp:n= 1.0
c     Water Outside Cladding #7, L1
 2047 like 2023 but
      u= 11 imp:n= 1.0
c     Fuel Pellet, #8, L1
 2048 like 2020 but
      mat= 17 rho= -1.0340E+01
      u= 12 imp:n= 1.0
c     Fuel/Cladding Gap, #8, L1
 2049 like 2021 but
      u= 12 imp:n= 1.0
c     Cladding, #8, L1
 2050 like 2022 but
      u= 12 imp:n= 1.0
c     Water Outside Cladding #8, L1
 2051 like 2023 but
      u= 12 imp:n= 1.0
c     Reference Fuel Rod Cell, L1
 2052     8 -9.8114E-01 -43 44 45 -46 lat= 1 u = 13 imp:n= 1.0
      fill= -1:7 -1:7 0:0
         13  13  13  13  13  13  13  13  13
         13  10  10   9   9   9   9  10  13
         13  10   8   8   5   5   6   9  13
         13   9   8  12   5   5   5   6  13
         13   9   5   5   7   5  11   6  13
         13   9   5   5   5   5   5   6  13
         13   9   6   5  11   5   5   6  13
         13  10   9   6   6   6   6   9  13
         13  13  13  13  13  13  13  13  13
c     Channel, L1
 2053    18 -6.5600E+00 ( 47 -48 -49 50):( -51 52 53 -54):
      ( -55 56 53 -54):( 57 -58 50 -49):
      ( -59 60 49 -53):( -61 62 49 54):
      ( -63 64 54 -50):( -65 66 -50 -53)
      u= 14 imp:n= 1.0
c     Active Fuel Area, L1
 2054     8 -9.8114E-01 ( 53 -54 -52 55):( 48 -53 -49 50 ):
      ( 54 -57 -49 50):( -60 -53 49):
      ( -62 54 49):( -64 54 -50):
      ( -66 -53 -50)
      fill= 13 u= 14 imp:n= 1.0
c     Water Outside of Channel, L1
 2055     2 -9.8114E-01 ( -47 :  51 :  58 :  -56 ):
      ( 59 -53 49 ):
      ( 61 54 49 ):
      ( 63 54 -50 ):
      ( 65 -53 -50 )
      u= 14 imp:n= 1.0
```

```
c     Fuel Pellet, #1, L2
 2056    19 -1.0340E+01 -40      u= 15 imp:n= 1.0
c     Fuel/Cladding Gap, #1, L2
 2057     0 40 -41       u= 15 imp:n= 1.0
c     Cladding, #1, L2
 2058    10 -6.5600E+00 41 -42      u= 15 imp:n= 1.0
c     Water Outside Cladding #1, L2
 2059     8 -9.8114E-01 42
      u= 15 imp:n= 1.0
c     Fuel Pellet, #2, L2
 2060 like 2056 but
      mat= 20 rho= -9.9400E+00
      u= 16 imp:n= 1.0
c     Fuel/Cladding Gap, #2, L2
 2061 like 2057 but
      u= 16 imp:n= 1.0
c     Cladding, #2, L2
 2062 like 2058 but
      u= 16 imp:n= 1.0
c     Water Outside Cladding #2, L2
 2063 like 2059 but
      u= 16 imp:n= 1.0
c     Fuel Pellet, #3, L2
 2064 like 2056 but
      mat= 21 rho= -9.4800E+00
      u= 17 imp:n= 1.0
c     Fuel/Cladding Gap, #3, L2
 2065 like 2057 but
      u= 17 imp:n= 1.0
c     Cladding, #3, L2
 2066 like 2058 but
      u= 17 imp:n= 1.0
c     Water Outside Cladding #3, L2
 2067 like 2059 but
      u= 17 imp:n= 1.0
c     Fuel Pellet, #4, L2
 2068 like 2056 but
      mat= 22 rho= -1.0340E+01
      u= 18 imp:n= 1.0
c     Fuel/Cladding Gap, #4, L2
 2069 like 2057 but
      u= 18 imp:n= 1.0
c     Cladding, #4, L2
 2070 like 2058 but
      u= 18 imp:n= 1.0
c     Water Outside Cladding #4, L2
 2071 like 2059 but
      u= 18 imp:n= 1.0
c     Fuel Pellet, #5, L2
 2072 like 2056 but
      mat= 23 rho= -9.9400E+00
      u= 19 imp:n= 1.0
c     Fuel/Cladding Gap, #5, L2
 2073 like 2057 but
      u= 19 imp:n= 1.0
c     Cladding, #5, L2
 2074 like 2058 but
      u= 19 imp:n= 1.0
c     Water Outside Cladding #5, L2
 2075 like 2059 but
      u= 19 imp:n= 1.0
c     Fuel Pellet, #6, L2
 2076 like 2056 but
      mat= 24 rho= -9.9400E+00
      u= 20 imp:n= 1.0
c     Fuel/Cladding Gap, #6, L2
 2077 like 2057 but
      u= 20 imp:n= 1.0
c     Cladding, #6, L2
 2078 like 2058 but
```

```
      u= 20 imp:n= 1.0
c     Water Outside Cladding #6, L2
 2079 like 2059 but
      u= 20 imp:n= 1.0
c     Fuel Pellet, #7, L2
 2080 like 2056 but
      mat= 25 rho= -1.0300E+01
      u= 21 imp:n= 1.0
c     Fuel/Cladding Gap, #7, L2
 2081 like 2057 but
      u= 21 imp:n= 1.0
c     Cladding, #7, L2
 2082 like 2058 but
      u= 21 imp:n= 1.0
c     Water Outside Cladding #7, L2
 2083 like 2059 but
      u= 21 imp:n= 1.0
c     Fuel Pellet, #8, L2
 2084 like 2056 but
      mat= 26 rho= -1.0340E+01
      u= 22 imp:n= 1.0
c     Fuel/Cladding Gap, #8, L2
 2085 like 2057 but
      u= 22 imp:n= 1.0
c     Cladding, #8, L2
 2086 like 2058 but
      u= 22 imp:n= 1.0
c     Water Outside Cladding #8, L2
 2087 like 2059 but
      u= 22 imp:n= 1.0
c     Reference Fuel Rod Cell, L2
 2088     8 -9.8114E-01 -43 44 45 -46 lat= 1 u = 23 imp:n= 1.0
      fill= -1:7 -1:7 0:0
         23  23  23  23  23  23  23  23  23
         23  20  20  19  19  19  19  20  23
         23  20  18  18  15  15  16  19  23
         23  19  18  22  15  15  15  16  23
         23  19  15  15  17  15  21  16  23
         23  19  15  15  15  15  15  16  23
         23  19  16  15  21  15  15  16  23
         23  20  19  16  16  16  16  19  23
         23  23  23  23  23  23  23  23  23
c     Channel, L2
 2089    18 -6.5600E+00 ( 47 -48 -49 50):( -51 52 53 -54):
      ( -55 56 53 -54):( 57 -58 50 -49):
      ( -59 60 49 -53):( -61 62 49 54):
      ( -63 64 54 -50):( -65 66 -50 -53)
      u= 24 imp:n= 1.0
c     Active Fuel Area, L2
 2090     8 -9.8114E-01 ( 53 -54 -52 55):( 48 -53 -49 50 ):
      ( 54 -57 -49 50):( -60 -53 49):
      ( -62 54 49):( -64 54 -50):
      ( -66 -53 -50)
      fill= 23 u= 24 imp:n= 1.0
c     Water Outside of Channel, L2
 2091     2 -9.8114E-01 ( -47 :  51 :  58 :  -56 ):
      ( 59 -53 49 ):
      ( 61 54 49 ):
      ( 63 54 -50 ):
      ( 65 -53 -50 )
      u= 24 imp:n= 1.0
c     Fuel Pellet, #1, L3
 2092    27 -1.0340E+01 -40      u= 25 imp:n= 1.0
c     Fuel/Cladding Gap, #1, L3
 2093     0 40 -41      u= 25 imp:n= 1.0
c     Cladding, #1, L3
 2094    10 -6.5600E+00 41 -42      u= 25 imp:n= 1.0
c     Water Outside Cladding #1, L3
 2095     8 -9.8114E-01 42
      u= 25 imp:n= 1.0
```

```
c     Fuel Pellet, #2, L3
 2096 like 2092 but
      mat= 28 rho= -9.9400E+00
      u= 26 imp:n= 1.0
c     Fuel/Cladding Gap, #2, L3
 2097 like 2093 but
      u= 26 imp:n= 1.0
c     Cladding, #2, L3
 2098 like 2094 but
      u= 26 imp:n= 1.0
c     Water Outside Cladding #2, L3
 2099 like 2095 but
      u= 26 imp:n= 1.0
c     Fuel Pellet, #3, L3
 2100 like 2092 but
      mat= 29 rho= -9.4800E+00
      u= 27 imp:n= 1.0
c     Fuel/Cladding Gap, #3, L3
 2101 like 2093 but
      u= 27 imp:n= 1.0
c     Cladding, #3, L3
 2102 like 2094 but
      u= 27 imp:n= 1.0
c     Water Outside Cladding #3, L3
 2103 like 2095 but
      u= 27 imp:n= 1.0
c     Fuel Pellet, #4, L3
 2104 like 2092 but
      mat= 30 rho= -1.0340E+01
      u= 28 imp:n= 1.0
c     Fuel/Cladding Gap, #4, L3
 2105 like 2093 but
      u= 28 imp:n= 1.0
c     Cladding, #4, L3
 2106 like 2094 but
      u= 28 imp:n= 1.0
c     Water Outside Cladding #4, L3
 2107 like 2095 but
      u= 28 imp:n= 1.0
c     Fuel Pellet, #5, L3
 2108 like 2092 but
      mat= 31 rho= -9.9400E+00
      u= 29 imp:n= 1.0
c     Fuel/Cladding Gap, #5, L3
 2109 like 2093 but
      u= 29 imp:n= 1.0
c     Cladding, #5, L3
 2110 like 2094 but
      u= 29 imp:n= 1.0
c     Water Outside Cladding #5, L3
 2111 like 2095 but
      u= 29 imp:n= 1.0
c     Fuel Pellet, #6, L3
 2112 like 2092 but
      mat= 32 rho= -9.9400E+00
      u= 30 imp:n= 1.0
c     Fuel/Cladding Gap, #6, L3
 2113 like 2093 but
      u= 30 imp:n= 1.0
c     Cladding, #6, L3
 2114 like 2094 but
      u= 30 imp:n= 1.0
c     Water Outside Cladding #6, L3
 2115 like 2095 but
      u= 30 imp:n= 1.0
c     Fuel Pellet, #7, L3
 2116 like 2092 but
      mat= 33 rho= -1.0300E+01
      u= 31 imp:n= 1.0
c     Fuel/Cladding Gap, #7, L3
```

```
 2117 like 2093 but
      u= 31 imp:n= 1.0
c     Cladding, #7, L3
 2118 like 2094 but
      u= 31 imp:n= 1.0
c     Water Outside Cladding #7, L3
 2119 like 2095 but
      u= 31 imp:n= 1.0
c     Fuel Pellet, #8, L3
 2120 like 2092 but
      mat= 34 rho= -1.0340E+01
      u= 32 imp:n= 1.0
c     Fuel/Cladding Gap, #8, L3
 2121 like 2093 but
      u= 32 imp:n= 1.0
c     Cladding, #8, L3
 2122 like 2094 but
      u= 32 imp:n= 1.0
c     Water Outside Cladding #8, L3
 2123 like 2095 but
      u= 32 imp:n= 1.0
c     Reference Fuel Rod Cell, L3
 2124     8 -9.8114E-01 -43 44 45 -46 lat= 1 u = 33 imp:n= 1.0
      fill= -1:7 -1:7 0:0
         33  33  33  33  33  33  33  33  33
         33  30  30  29  29  29  29  30  33
         33  30  28  28  25  25  26  29  33
         33  29  28  32  25  25  25  26  33
         33  29  25  25  27  25  31  26  33
         33  29  25  25  25  25  25  26  33
         33  29  26  25  31  25  25  26  33
         33  30  29  26  26  26  26  29  33
         33  33  33  33  33  33  33  33  33
c     Channel, L3
 2125    18 -6.5600E+00 ( 47 -48 -49 50):( -51 52 53 -54):
      ( -55 56 53 -54):( 57 -58 50 -49):
      ( -59 60 49 -53):( -61 62 49 54):
      ( -63 64 54 -50):( -65 66 -50 -53)
      u= 34 imp:n= 1.0
c     Active Fuel Area, L3
 2126     8 -9.8114E-01 ( 53 -54 -52 55):( 48 -53 -49 50 ):
      ( 54 -57 -49 50):( -60 -53 49):
      ( -62 54 49):( -64 54 -50):
      ( -66 -53 -50)
      fill= 33 u= 34 imp:n= 1.0
c     Water Outside of Channel, L3
 2127     2 -9.8114E-01 ( -47 :  51 :  58 :  -56 ):
      ( 59 -53 49 ):
      ( 61 54 49 ):
      ( 63 54 -50 ):
      ( 65 -53 -50 )
      u= 34 imp:n= 1.0
c     Fuel Pellet, #1, L4
 2128    35 -1.0340E+01 -40      u= 35 imp:n= 1.0
c     Fuel/Cladding Gap, #1, L4
 2129     0 40 -41      u= 35 imp:n= 1.0
c     Cladding, #1, L4
 2130    10 -6.5600E+00 41 -42      u= 35 imp:n= 1.0
c     Water Outside Cladding #1, L4
 2131     8 -9.8114E-01 42
      u= 35 imp:n= 1.0
c     Fuel Pellet, #2, L4
 2132 like 2128 but
      mat= 36 rho= -9.4800E+00
      u= 36 imp:n= 1.0
c     Fuel/Cladding Gap, #2, L4
 2133 like 2129 but
      u= 36 imp:n= 1.0
c     Cladding, #2, L4
 2134 like 2130 but
```

```
      u= 36 imp:n= 1.0
c     Water Outside Cladding #2, L4
 2135 like 2131 but
      u= 36 imp:n= 1.0
c     Fuel Pellet, #3, L4
 2136 like 2128 but
      mat= 37 rho= -1.0340E+01
      u= 37 imp:n= 1.0
c     Fuel/Cladding Gap, #3, L4
 2137 like 2129 but
      u= 37 imp:n= 1.0
c     Cladding, #3, L4
 2138 like 2130 but
      u= 37 imp:n= 1.0
c     Water Outside Cladding #3, L4
 2139 like 2131 but
      u= 37 imp:n= 1.0
c     Fuel Pellet, #4, L4
 2140 like 2128 but
      mat= 38 rho= -1.0340E+01
      u= 38 imp:n= 1.0
c     Fuel/Cladding Gap, #4, L4
 2141 like 2129 but
      u= 38 imp:n= 1.0
c     Cladding, #4, L4
 2142 like 2130 but
      u= 38 imp:n= 1.0
c     Water Outside Cladding #4, L4
 2143 like 2131 but
      u= 38 imp:n= 1.0
c     Fuel Pellet, #5, L4
 2144 like 2128 but
      mat= 39 rho= -1.0300E+01
      u= 39 imp:n= 1.0
c     Fuel/Cladding Gap, #5, L4
 2145 like 2129 but
      u= 39 imp:n= 1.0
c     Cladding, #5, L4
 2146 like 2130 but
      u= 39 imp:n= 1.0
c     Water Outside Cladding #5, L4
 2147 like 2131 but
      u= 39 imp:n= 1.0
c     Fuel Pellet, #6, L4
 2148 like 2128 but
      mat= 40 rho= -1.0340E+01
      u= 40 imp:n= 1.0
c     Fuel/Cladding Gap, #6, L4
 2149 like 2129 but
      u= 40 imp:n= 1.0
c     Cladding, #6, L4
 2150 like 2130 but
      u= 40 imp:n= 1.0
c     Water Outside Cladding #6, L4
 2151 like 2131 but
      u= 40 imp:n= 1.0
c     Reference Fuel Rod Cell, L4
 2152     8 -9.8114E-01 -43 44 45 -46 lat= 1 u = 41 imp:n= 1.0
      fill= -1:7 -1:7 0:0
         41  41  41  41  41  41  41  41  41
         41  38  38  37  37  37  37  38  41
         41  38  37  37  35  35  35  37  41
         41  37  37  40  35  35  35  35  41
         41  37  35  35  36  35  39  35  41
         41  37  35  35  35  35  35  35  41
         41  37  35  35  39  35  35  35  41
         41  38  37  35  35  35  35  37  41
         41  41  41  41  41  41  41  41  41
c     Channel, L4
 2153     18 -6.5600E+00 ( 47 -48 -49 50):( -51 52 53 -54):
```

```
      ( -55 56 53 -54):( 57 -58 50 -49):
      ( -59 60 49 -53):( -61 62 49 54):
      ( -63 64 54 -50):( -65 66 -50 -53)
      u= 42 imp:n= 1.0
c     Active Fuel Area, L4
 2154     8 -9.8114E-01 ( 53 -54 -52 55):( 48 -53 -49 50 ):
      ( 54 -57 -49 50):( -60 -53 49):
      ( -62 54 49):( -64 54 -50):
      ( -66 -53 -50)
      fill= 41 u= 42 imp:n= 1.0
c     Water Outside of Channel, L4
 2155     2 -9.8114E-01 ( -47 :  51 :  58 :  -56 ):
      ( 59 -53 49 ):
      ( 61 54 49 ):
      ( 63 54 -50 ):
      ( 65 -53 -50 )
      u= 42 imp:n= 1.0
c     Fuel Pellet, #1, L5
 2156    41 -1.0340E+01 -40      u= 43 imp:n= 1.0
c     Fuel/Cladding Gap, #1, L5
 2157     0 40 -41      u= 43 imp:n= 1.0
c     Cladding, #1, L5
 2158    10 -6.5600E+00 41 -42      u= 43 imp:n= 1.0
c     Water Outside Cladding #1, L5
 2159     8 -9.8114E-01 42
      u= 43 imp:n= 1.0
c     Fuel Pellet, #2, L5
 2160 like 2156 but
      mat= 42 rho= -9.4800E+00
      u= 44 imp:n= 1.0
c     Fuel/Cladding Gap, #2, L5
 2161 like 2157 but
      u= 44 imp:n= 1.0
c     Cladding, #2, L5
 2162 like 2158 but
      u= 44 imp:n= 1.0
c     Water Outside Cladding #2, L5
 2163 like 2159 but
      u= 44 imp:n= 1.0
c     Fuel Pellet, #3, L5
 2164 like 2156 but
      mat= 43 rho= -1.0340E+01
      u= 45 imp:n= 1.0
c     Fuel/Cladding Gap, #3, L5
 2165 like 2157 but
      u= 45 imp:n= 1.0
c     Cladding, #3, L5
 2166 like 2158 but
      u= 45 imp:n= 1.0
c     Water Outside Cladding #3, L5
 2167 like 2159 but
      u= 45 imp:n= 1.0
c     Fuel Pellet, #4, L5
 2168 like 2156 but
      mat= 44 rho= -1.0340E+01
      u= 46 imp:n= 1.0
c     Fuel/Cladding Gap, #4, L5
 2169 like 2157 but
      u= 46 imp:n= 1.0
c     Cladding, #4, L5
 2170 like 2158 but
      u= 46 imp:n= 1.0
c     Water Outside Cladding #4, L5
 2171 like 2159 but
      u= 46 imp:n= 1.0
c     Fuel Pellet, #5, L5
 2172 like 2156 but
      mat= 45 rho= -1.0260E+01
      u= 47 imp:n= 1.0
c     Fuel/Cladding Gap, #5, L5
```

```
 2173 like 2157 but
      u= 47 imp:n= 1.0
c     Cladding, #5, L5
 2174 like 2158 but
      u= 47 imp:n= 1.0
c     Water Outside Cladding #5, L5
 2175 like 2159 but
      u= 47 imp:n= 1.0
c     Fuel Pellet, #6, L5
 2176 like 2156 but
      mat= 46 rho= -1.0340E+01
      u= 48 imp:n= 1.0
c     Fuel/Cladding Gap, #6, L5
 2177 like 2157 but
      u= 48 imp:n= 1.0
c     Cladding, #6, L5
 2178 like 2158 but
      u= 48 imp:n= 1.0
c     Water Outside Cladding #6, L5
 2179 like 2159 but
      u= 48 imp:n= 1.0
c     Reference Fuel Rod Cell, L5
 2180     8 -9.8114E-01 -43 44 45 -46 lat= 1 u = 49 imp:n= 1.0
      fill= -1:7 -1:7 0:0
         49  49  49  49  49  49  49  49  49
         49  46  46  45  45  45  45  46  49
         49  46  45  45  43  43  43  45  49
         49  45  45  48  43  43  43  43  49
         49  45  43  43  44  43  47  43  49
         49  45  43  43  43  43  43  43  49
         49  45  43  43  47  43  43  43  49
         49  46  45  43  43  43  43  45  49
         49  49  49  49  49  49  49  49  49
c     Channel, L5
 2181    18 -6.5600E+00 ( 47 -48 -49 50):( -51 52 53 -54):
      ( -55 56 53 -54):( 57 -58 50 -49):
      ( -59 60 49 -53):( -61 62 49 54):
      ( -63 64 54 -50):( -65 66 -50 -53)
      u= 50 imp:n= 1.0
c     Active Fuel Area, L5
 2182     8 -9.8114E-01 ( 53 -54 -52 55):( 48 -53 -49 50 ):
      ( 54 -57 -49 50):( -60 -53 49):
      ( -62 54 49):( -64 54 -50):
      ( -66 -53 -50)
      fill= 49 u= 50 imp:n= 1.0
c     Water Outside of Channel, L5
 2183     2 -9.8114E-01 ( -47 :  51 :  58 :  -56 ):
      ( 59 -53 49 ):
      ( 61 54 49 ):
      ( 63 54 -50 ):
      ( 65 -53 -50 )
      u= 50 imp:n= 1.0
c     Fuel Pellet, #1, L6
 2184    47 -1.0340E+01 -40      u= 51 imp:n= 1.0
c     Fuel/Cladding Gap, #1, L6
 2185     0 40 -41      u= 51 imp:n= 1.0
c     Cladding, #1, L6
 2186    10 -6.5600E+00 41 -42      u= 51 imp:n= 1.0
c     Water Outside Cladding #1, L6
 2187     8 -9.8114E-01 42
      u= 51 imp:n= 1.0
c     Fuel Pellet, #2, L6
 2188 like 2184 but
      mat= 48 rho= -9.4800E+00
      u= 52 imp:n= 1.0
c     Fuel/Cladding Gap, #2, L6
 2189 like 2185 but
      u= 52 imp:n= 1.0
c     Cladding, #2, L6
 2190 like 2186 but
```

```
        u= 52 imp:n= 1.0
c       Water Outside Cladding #2, L6
 2191 like 2187 but
        u= 52 imp:n= 1.0
c       Fuel Pellet, #3, L6
 2192 like 2184 but
        mat= 49 rho= -1.0340E+01
        u= 53 imp:n= 1.0
c       Fuel/Cladding Gap, #3, L6
 2193 like 2185 but
        u= 53 imp:n= 1.0
c       Cladding, #3, L6
 2194 like 2186 but
        u= 53 imp:n= 1.0
c       Water Outside Cladding #3, L6
 2195 like 2187 but
        u= 53 imp:n= 1.0
c       Fuel Pellet, #4, L6
 2196 like 2184 but
        mat= 50 rho= -1.0340E+01
        u= 54 imp:n= 1.0
c       Fuel/Cladding Gap, #4, L6
 2197 like 2185 but
        u= 54 imp:n= 1.0
c       Cladding, #4, L6
 2198 like 2186 but
        u= 54 imp:n= 1.0
c       Water Outside Cladding #4, L6
 2199 like 2187 but
        u= 54 imp:n= 1.0
c       Fuel Pellet, #5, L6
 2200 like 2184 but
        mat= 51 rho= -1.0260E+01
        u= 55 imp:n= 1.0
c       Fuel/Cladding Gap, #5, L6
 2201 like 2185 but
        u= 55 imp:n= 1.0
c       Cladding, #5, L6
 2202 like 2186 but
        u= 55 imp:n= 1.0
c       Water Outside Cladding #5, L6
 2203 like 2187 but
        u= 55 imp:n= 1.0
c       Fuel Pellet, #6, L6
 2204 like 2184 but
        mat= 52 rho= -1.0340E+01
        u= 56 imp:n= 1.0
c       Fuel/Cladding Gap, #6, L6
 2205 like 2185 but
        u= 56 imp:n= 1.0
c       Cladding, #6, L6
 2206 like 2186 but
        u= 56 imp:n= 1.0
c       Water Outside Cladding #6, L6
 2207 like 2187 but
        u= 56 imp:n= 1.0
c       Reference Fuel Rod Cell, L6
 2208    8 -9.8114E-01 -43 44 45 -46 lat= 1 u = 57 imp:n= 1.0
        fill= -1:7 -1:7 0:0
          57  57  57  57  57  57  57  57  57
          57  54  54  53  53  53  53  54  57
          57  54  53  53  51  51  51  53  57
          57  53  53  56  51  51  51  51  57
          57  53  51  51  52  51  55  51  57
          57  53  51  51  51  51  51  51  57
          57  53  51  51  55  51  51  51  57
          57  54  53  51  51  51  51  53  57
          57  57  57  57  57  57  57  57  57
c       Channel, L6
 2209    18 -6.5600E+00 ( 47 -48 -49 50):( -51 52 53 -54):
```

```
      ( -55 56 53 -54):( 57 -58 50 -49):
      ( -59 60 49 -53):( -61 62 49 54):
      ( -63 64 54 -50):( -65 66 -50 -53)
      u= 58 imp:n= 1.0
c     Active Fuel Area, L6
 2210     8 -9.8114E-01 ( 53 -54 -52 55):( 48 -53 -49 50 ):
      ( 54 -57 -49 50):( -60 -53 49):
      ( -62 54 49):( -64 54 -50):
      ( -66 -53 -50)
      fill= 57 u= 58 imp:n= 1.0
c     Water Outside of Channel, L6
 2211     2 -9.8114E-01 ( -47 :  51 :  58 :  -56 ):
      ( 59 -53 49 ):
      ( 61 54 49 ):
      ( 63 54 -50 ):
      ( 65 -53 -50 )
      u= 58 imp:n= 1.0
c     Fuel Pellet, #1, L7
 2212    53 -1.0340E+01 -40      u= 59 imp:n= 1.0
c     Fuel/Cladding Gap, #1, L7
 2213     0 40 -41      u= 59 imp:n= 1.0
c     Cladding, #1, L7
 2214    10 -6.5600E+00 41 -42      u= 59 imp:n= 1.0
c     Water Outside Cladding #1, L7
 2215     8 -9.8114E-01 42
      u= 59 imp:n= 1.0
c     Fuel Pellet, #2, L7
 2216 like 2212 but
      mat= 54 rho= -9.9400E+00
      u= 60 imp:n= 1.0
c     Fuel/Cladding Gap, #2, L7
 2217 like 2213 but
      u= 60 imp:n= 1.0
c     Cladding, #2, L7
 2218 like 2214 but
      u= 60 imp:n= 1.0
c     Water Outside Cladding #2, L7
 2219 like 2215 but
      u= 60 imp:n= 1.0
c     Fuel Pellet, #3, L7
 2220 like 2212 but
      mat= 55 rho= -9.4800E+00
      u= 61 imp:n= 1.0
c     Fuel/Cladding Gap, #3, L7
 2221 like 2213 but
      u= 61 imp:n= 1.0
c     Cladding, #3, L7
 2222 like 2214 but
      u= 61 imp:n= 1.0
c     Water Outside Cladding #3, L7
 2223 like 2215 but
      u= 61 imp:n= 1.0
c     Fuel Pellet, #4, L7
 2224 like 2212 but
      mat= 56 rho= -1.0340E+01
      u= 62 imp:n= 1.0
c     Fuel/Cladding Gap, #4, L7
 2225 like 2213 but
      u= 62 imp:n= 1.0
c     Cladding, #4, L7
 2226 like 2214 but
      u= 62 imp:n= 1.0
c     Water Outside Cladding #4, L7
 2227 like 2215 but
      u= 62 imp:n= 1.0
c     Fuel Pellet, #5, L7
 2228 like 2212 but
      mat= 57 rho= -9.9400E+00
      u= 63 imp:n= 1.0
c     Fuel/Cladding Gap, #5, L7
```

```
 2229 like 2213 but
      u= 63 imp:n= 1.0
c     Cladding, #5, L7
 2230 like 2214 but
      u= 63 imp:n= 1.0
c     Water Outside Cladding #5, L7
 2231 like 2215 but
      u= 63 imp:n= 1.0
c     Fuel Pellet, #6, L7
 2232 like 2212 but
      mat= 58 rho= -9.9400E+00
      u= 64 imp:n= 1.0
c     Fuel/Cladding Gap, #6, L7
 2233 like 2213 but
      u= 64 imp:n= 1.0
c     Cladding, #6, L7
 2234 like 2214 but
      u= 64 imp:n= 1.0
c     Water Outside Cladding #6, L7
 2235 like 2215 but
      u= 64 imp:n= 1.0
c     Fuel Pellet, #7, L7
 2236 like 2212 but
      mat= 59 rho= -1.0300E+01
      u= 65 imp:n= 1.0
c     Fuel/Cladding Gap, #7, L7
 2237 like 2213 but
      u= 65 imp:n= 1.0
c     Cladding, #7, L7
 2238 like 2214 but
      u= 65 imp:n= 1.0
c     Water Outside Cladding #7, L7
 2239 like 2215 but
      u= 65 imp:n= 1.0
c     Reference Fuel Rod Cell, L7
 2240     8 -9.8114E-01 -43 44 45 -46 lat= 1 u = 66 imp:n= 1.0
      fill= -1:7 -1:7 0:0
         66  66  66  66  66  66  66  66  66
         66  64  64  63  63  63  63  64  66
         66  64  62  62  59  59  60  63  66
         66  63  62  59  59  59  59  60  66
         66  63  59  59  61  59  65  60  66
         66  63  59  59  59  59  59  60  66
         66  63  60  59  65  59  59  60  66
         66  64  63  60  60  60  60  63  66
         66  66  66  66  66  66  66  66  66
c     Channel, L7
 2241     18 -6.5600E+00 ( 47 -48 -49 50):( -51 52 53 -54):
      ( -55 56 53 -54):( 57 -58 50 -49):
      ( -59 60 49 -53):( -61 62 49 54):
      ( -63 64 54 -50):( -65 66 -50 -53)
      u= 67 imp:n= 1.0
c     Active Fuel Area, L7
 2242     8 -9.8114E-01 ( 53 -54 -52 55):( 48 -53 -49 50 ):
      ( 54 -57 -49 50):( -60 -53 49):
      ( -62 54 49):( -64 54 -50):
      ( -66 -53 -50)
      fill= 66 u= 67 imp:n= 1.0
c     Water Outside of Channel, L7
 2243     2 -9.8114E-01 ( -47 :  51 :  58 :  -56 ):
      ( 59 -53 49 ):
      ( 61 54 49 ):
      ( 63 54 -50 ):
      ( 65 -53 -50 )
      u= 67 imp:n= 1.0
c     Fuel Pellet, #1, L8
 2244    60 -1.0340E+01 -40      u= 68 imp:n= 1.0
c     Fuel/Cladding Gap, #1, L8
 2245     0 40 -41      u= 68 imp:n= 1.0
c     Cladding, #1, L8
```

```
 2246     10 -6.5600E+00 41 -42       u= 68 imp:n= 1.0
c     Water Outside Cladding #1, L8
 2247      8 -9.8114E-01 42
      u= 68 imp:n= 1.0
c     Fuel Pellet, #2, L8
 2248 like 2244 but
      mat= 61 rho= -9.9400E+00
      u= 69 imp:n= 1.0
c     Fuel/Cladding Gap, #2, L8
 2249 like 2245 but
      u= 69 imp:n= 1.0
c     Cladding, #2, L8
 2250 like 2246 but
      u= 69 imp:n= 1.0
c     Water Outside Cladding #2, L8
 2251 like 2247 but
      u= 69 imp:n= 1.0
c     Fuel Pellet, #3, L8
 2252 like 2244 but
      mat= 62 rho= -9.4800E+00
      u= 70 imp:n= 1.0
c     Fuel/Cladding Gap, #3, L8
 2253 like 2245 but
      u= 70 imp:n= 1.0
c     Cladding, #3, L8
 2254 like 2246 but
      u= 70 imp:n= 1.0
c     Water Outside Cladding #3, L8
 2255 like 2247 but
      u= 70 imp:n= 1.0
c     Fuel Pellet, #4, L8
 2256 like 2244 but
      mat= 63 rho= -1.0340E+01
      u= 71 imp:n= 1.0
c     Fuel/Cladding Gap, #4, L8
 2257 like 2245 but
      u= 71 imp:n= 1.0
c     Cladding, #4, L8
 2258 like 2246 but
      u= 71 imp:n= 1.0
c     Water Outside Cladding #4, L8
 2259 like 2247 but
      u= 71 imp:n= 1.0
c     Fuel Pellet, #5, L8
 2260 like 2244 but
      mat= 64 rho= -9.9400E+00
      u= 72 imp:n= 1.0
c     Fuel/Cladding Gap, #5, L8
 2261 like 2245 but
      u= 72 imp:n= 1.0
c     Cladding, #5, L8
 2262 like 2246 but
      u= 72 imp:n= 1.0
c     Water Outside Cladding #5, L8
 2263 like 2247 but
      u= 72 imp:n= 1.0
c     Fuel Pellet, #6, L8
 2264 like 2244 but
      mat= 65 rho= -9.9400E+00
      u= 73 imp:n= 1.0
c     Fuel/Cladding Gap, #6, L8
 2265 like 2245 but
      u= 73 imp:n= 1.0
c     Cladding, #6, L8
 2266 like 2246 but
      u= 73 imp:n= 1.0
c     Water Outside Cladding #6, L8
 2267 like 2247 but
      u= 73 imp:n= 1.0
c     Fuel Pellet, #7, L8
```

```
 2268 like 2244 but
      mat= 66 rho= -1.0290E+01
      u= 74 imp:n= 1.0
c     Fuel/Cladding Gap, #7, L8
 2269 like 2245 but
      u= 74 imp:n= 1.0
c     Cladding, #7, L8
 2270 like 2246 but
      u= 74 imp:n= 1.0
c     Water Outside Cladding #7, L8
 2271 like 2247 but
      u= 74 imp:n= 1.0
c     Reference Fuel Rod Cell, L8
 2272     8 -9.8114E-01 -43 44 45 -46 lat= 1 u = 75 imp:n= 1.0
      fill= -1:7 -1:7 0:0
         75  75  75  75  75  75  75  75  75
         75  73  73  72  72  72  72  73  75
         75  73  71  71  68  68  69  72  75
         75  72  71  68  68  68  68  69  75
         75  72  68  68  70  68  74  69  75
         75  72  68  68  68  68  68  69  75
         75  72  69  68  74  68  68  69  75
         75  73  72  69  69  69  69  72  75
         75  75  75  75  75  75  75  75  75
c     Channel, L8
 2273    18 -6.5600E+00 ( 47 -48 -49 50):( -51 52 53 -54):
      ( -55 56 53 -54):( 57 -58 50 -49):
      ( -59 60 49 -53):( -61 62 49 54):
      ( -63 64 54 -50):( -65 66 -50 -53)
      u= 76 imp:n= 1.0
c     Active Fuel Area, L8
 2274     8 -9.8114E-01 ( 53 -54 -52 55):( 48 -53 -49 50 ):
      ( 54 -57 -49 50):( -60 -53 49):
      ( -62 54 49):( -64 54 -50):
      ( -66 -53 -50)
      fill= 75 u= 76 imp:n= 1.0
c     Water Outside of Channel, L8
 2275     2 -9.8114E-01 ( -47 :  51 :  58 :  -56 ):
      ( 59 -53 49 ):
      ( 61 54 49 ):
      ( 63 54 -50 ):
      ( 65 -53 -50 )
      u= 76 imp:n= 1.0
c     Fuel Pellet, #1, L9
 2276    67 -1.0340E+01 -40      u= 77 imp:n= 1.0
c     Fuel/Cladding Gap, #1, L9
 2277     0 40 -41      u= 77 imp:n= 1.0
c     Cladding, #1, L9
 2278    10 -6.5600E+00 41 -42      u= 77 imp:n= 1.0
c     Water Outside Cladding #1, L9
 2279     8 -9.8114E-01 42
      u= 77 imp:n= 1.0
c     Fuel Pellet, #2, L9
 2280 like 2276 but
      mat= 68 rho= -9.4800E+00
      u= 78 imp:n= 1.0
c     Fuel/Cladding Gap, #2, L9
 2281 like 2277 but
      u= 78 imp:n= 1.0
c     Cladding, #2, L9
 2282 like 2278 but
      u= 78 imp:n= 1.0
c     Water Outside Cladding #2, L9
 2283 like 2279 but
      u= 78 imp:n= 1.0
c     Fuel Pellet, #3, L9
 2284 like 2276 but
      mat= 69 rho= -1.0340E+01
      u= 79 imp:n= 1.0
c     Fuel/Cladding Gap, #3, L9
```

```
 2285 like 2277 but
      u= 79 imp:n= 1.0
c     Cladding, #3, L9
 2286 like 2278 but
      u= 79 imp:n= 1.0
c     Water Outside Cladding #3, L9
 2287 like 2279 but
      u= 79 imp:n= 1.0
c     Fuel Pellet, #4, L9
 2288 like 2276 but
      mat= 70 rho= -1.0340E+01
      u= 80 imp:n= 1.0
c     Fuel/Cladding Gap, #4, L9
 2289 like 2277 but
      u= 80 imp:n= 1.0
c     Cladding, #4, L9
 2290 like 2278 but
      u= 80 imp:n= 1.0
c     Water Outside Cladding #4, L9
 2291 like 2279 but
      u= 80 imp:n= 1.0
c     Fuel Pellet, #5, L9
 2292 like 2276 but
      mat= 71 rho= -1.0300E+01
      u= 81 imp:n= 1.0
c     Fuel/Cladding Gap, #5, L9
 2293 like 2277 but
      u= 81 imp:n= 1.0
c     Cladding, #5, L9
 2294 like 2278 but
      u= 81 imp:n= 1.0
c     Water Outside Cladding #5, L9
 2295 like 2279 but
      u= 81 imp:n= 1.0
c     Reference Fuel Rod Cell, L9
 2296     8 -9.8114E-01 -43 44 45 -46 lat= 1 u = 82 imp:n= 1.0
      fill= -1:7 -1:7 0:0
         82  82  82  82  82  82  82  82  82
         82  80  80  79  79  79  79  80  82
         82  80  79  79  77  77  77  79  82
         82  79  79  77  77  77  77  77  82
         82  79  77  77  78  77  81  77  82
         82  79  77  77  77  77  77  77  82
         82  79  77  77  81  77  77  77  82
         82  80  79  77  77  77  77  79  82
         82  82  82  82  82  82  82  82  82
c     Channel, L9
 2297    18 -6.5600E+00 ( 47 -48 -49 50):( -51 52 53 -54):
      ( -55 56 53 -54):( 57 -58 50 -49):
      ( -59 60 49 -53):( -61 62 49 54):
      ( -63 64 54 -50):( -65 66 -50 -53)
      u= 83 imp:n= 1.0
c     Active Fuel Area, L9
 2298     8 -9.8114E-01 ( 53 -54 -52 55):( 48 -53 -49 50 ):
      ( 54 -57 -49 50):( -60 -53 49):
      ( -62 54 49):( -64 54 -50):
      ( -66 -53 -50)
      fill= 82 u= 83 imp:n= 1.0
c     Water Outside of Channel, L9
 2299     2 -9.8114E-01 ( -47 :  51 :  58 :  -56 ):
      ( 59 -53 49 ):
      ( 61 54 49 ):
      ( 63 54 -50 ):
      ( 65 -53 -50 )
      u= 83 imp:n= 1.0
c     Fuel Pellet, #1, L10
 2300    72 -1.0340E+01 -40      u= 84 imp:n= 1.0
c     Fuel/Cladding Gap, #1, L10
 2301     0 40 -41      u= 84 imp:n= 1.0
c     Cladding, #1, L10
```

```
 2302    10 -6.5600E+00 41 -42      u= 84 imp:n= 1.0
c     Water Outside Cladding #1, L10
 2303     8 -9.8114E-01 42
      u= 84 imp:n= 1.0
c     Fuel Pellet, #2, L10
 2304 like 2300 but
      mat= 73 rho= -9.9400E+00
      u= 85 imp:n= 1.0
c     Fuel/Cladding Gap, #2, L10
 2305 like 2301 but
      u= 85 imp:n= 1.0
c     Cladding, #2, L10
 2306 like 2302 but
      u= 85 imp:n= 1.0
c     Water Outside Cladding #2, L10
 2307 like 2303 but
      u= 85 imp:n= 1.0
c     Fuel Pellet, #3, L10
 2308 like 2300 but
      mat= 74 rho= -9.4800E+00
      u= 86 imp:n= 1.0
c     Fuel/Cladding Gap, #3, L10
 2309 like 2301 but
      u= 86 imp:n= 1.0
c     Cladding, #3, L10
 2310 like 2302 but
      u= 86 imp:n= 1.0
c     Water Outside Cladding #3, L10
 2311 like 2303 but
      u= 86 imp:n= 1.0
c     Fuel Pellet, #4, L10
 2312 like 2300 but
      mat= 75 rho= -1.0340E+01
      u= 87 imp:n= 1.0
c     Fuel/Cladding Gap, #4, L10
 2313 like 2301 but
      u= 87 imp:n= 1.0
c     Cladding, #4, L10
 2314 like 2302 but
      u= 87 imp:n= 1.0
c     Water Outside Cladding #4, L10
 2315 like 2303 but
      u= 87 imp:n= 1.0
c     Fuel Pellet, #5, L10
 2316 like 2300 but
      mat= 76 rho= -9.9400E+00
      u= 88 imp:n= 1.0
c     Fuel/Cladding Gap, #5, L10
 2317 like 2301 but
      u= 88 imp:n= 1.0
c     Cladding, #5, L10
 2318 like 2302 but
      u= 88 imp:n= 1.0
c     Water Outside Cladding #5, L10
 2319 like 2303 but
      u= 88 imp:n= 1.0
c     Fuel Pellet, #6, L10
 2320 like 2300 but
      mat= 77 rho= -9.9400E+00
      u= 89 imp:n= 1.0
c     Fuel/Cladding Gap, #6, L10
 2321 like 2301 but
      u= 89 imp:n= 1.0
c     Cladding, #6, L10
 2322 like 2302 but
      u= 89 imp:n= 1.0
c     Water Outside Cladding #6, L10
 2323 like 2303 but
      u= 89 imp:n= 1.0
c     Fuel Pellet, #7, L10
```

```
 2324 like 2300 but
      mat= 78 rho= -1.0290E+01
      u= 90 imp:n= 1.0
c     Fuel/Cladding Gap, #7, L10
 2325 like 2301 but
      u= 90 imp:n= 1.0
c     Cladding, #7, L10
 2326 like 2302 but
      u= 90 imp:n= 1.0
c     Water Outside Cladding #7, L10
 2327 like 2303 but
      u= 90 imp:n= 1.0
c     Reference Fuel Rod Cell, L10
 2328     8 -9.8114E-01 -43 44 45 -46 lat= 1 u = 91 imp:n= 1.0
      fill= -1:7 -1:7 0:0
         91  91  91  91  91  91  91  91  91
         91  89  89  88  88  88  88  89  91
         91  89  87  87  84  84  85  88  91
         91  88  87  84  84  84  84  85  91
         91  88  84  84  86  84  90  85  91
         91  88  84  84  84  84  84  85  91
         91  88  85  84  90  84  84  85  91
         91  89  88  85  85  85  85  88  91
         91  91  91  91  91  91  91  91  91
c     Channel, L10
 2329    18 -6.5600E+00 ( 47 -48 -49 50):( -51 52 53 -54):
      ( -55 56 53 -54):( 57 -58 50 -49):
      ( -59 60 49 -53):( -61 62 49 54):
      ( -63 64 54 -50):( -65 66 -50 -53)
      u= 92 imp:n= 1.0
c     Active Fuel Area, L10
 2330     8 -9.8114E-01 ( 53 -54 -52 55):( 48 -53 -49 50 ):
      ( 54 -57 -49 50):( -60 -53 49):
      ( -62 54 49):( -64 54 -50):
      ( -66 -53 -50)
      fill= 91 u= 92 imp:n= 1.0
c     Water Outside of Channel, L10
 2331     2 -9.8114E-01 ( -47 :  51 :  58 :  -56 ):
      ( 59 -53 49 ):
      ( 61 54 49 ):
      ( 63 54 -50 ):
      ( 65 -53 -50 )
      u= 92 imp:n= 1.0
c     Fuel Pellet, #1, L2
 2332    19 -1.0340E+01 -40      u= 93 imp:n= 1.0
c     Fuel/Cladding Gap, #1, L2
 2333     0 40 -41      u= 93 imp:n= 1.0
c     Cladding, #1, L2
 2334    10 -6.5600E+00 41 -42      u= 93 imp:n= 1.0
c     Water Outside Cladding #1, L2
 2335    79 -1.1790E+00 42
      u= 93 imp:n= 1.0
c     Fuel Pellet, #2, L2
 2336 like 2332 but
      mat= 20 rho= -9.9400E+00
      u= 94 imp:n= 1.0
c     Fuel/Cladding Gap, #2, L2
 2337 like 2333 but
      u= 94 imp:n= 1.0
c     Cladding, #2, L2
 2338 like 2334 but
      u= 94 imp:n= 1.0
c     Water Outside Cladding #2, L2
 2339 like 2335 but
      u= 94 imp:n= 1.0
c     Fuel Pellet, #3, L2
 2340 like 2332 but
      mat= 21 rho= -9.4800E+00
      u= 95 imp:n= 1.0
c     Fuel/Cladding Gap, #3, L2
```

```
 2341 like 2333 but
      u= 95 imp:n= 1.0
c     Cladding, #3, L2
 2342 like 2334 but
      u= 95 imp:n= 1.0
c     Water Outside Cladding #3, L2
 2343 like 2335 but
      u= 95 imp:n= 1.0
c     Fuel Pellet, #4, L2
 2344 like 2332 but
      mat= 22 rho= -1.0340E+01
      u= 96 imp:n= 1.0
c     Fuel/Cladding Gap, #4, L2
 2345 like 2333 but
      u= 96 imp:n= 1.0
c     Cladding, #4, L2
 2346 like 2334 but
      u= 96 imp:n= 1.0
c     Water Outside Cladding #4, L2
 2347 like 2335 but
      u= 96 imp:n= 1.0
c     Fuel Pellet, #5, L2
 2348 like 2332 but
      mat= 23 rho= -9.9400E+00
      u= 97 imp:n= 1.0
c     Fuel/Cladding Gap, #5, L2
 2349 like 2333 but
      u= 97 imp:n= 1.0
c     Cladding, #5, L2
 2350 like 2334 but
      u= 97 imp:n= 1.0
c     Water Outside Cladding #5, L2
 2351 like 2335 but
      u= 97 imp:n= 1.0
c     Fuel Pellet, #6, L2
 2352 like 2332 but
      mat= 24 rho= -9.9400E+00
      u= 98 imp:n= 1.0
c     Fuel/Cladding Gap, #6, L2
 2353 like 2333 but
      u= 98 imp:n= 1.0
c     Cladding, #6, L2
 2354 like 2334 but
      u= 98 imp:n= 1.0
c     Water Outside Cladding #6, L2
 2355 like 2335 but
      u= 98 imp:n= 1.0
c     Fuel Pellet, #7, L2
 2356 like 2332 but
      mat= 25 rho= -1.0300E+01
      u= 99 imp:n= 1.0
c     Fuel/Cladding Gap, #7, L2
 2357 like 2333 but
      u= 99 imp:n= 1.0
c     Cladding, #7, L2
 2358 like 2334 but
      u= 99 imp:n= 1.0
c     Water Outside Cladding #7, L2
 2359 like 2335 but
      u= 99 imp:n= 1.0
c     Fuel Pellet, #8, L2
 2360 like 2332 but
      mat= 26 rho= -1.0340E+01
      u= 100 imp:n= 1.0
c     Fuel/Cladding Gap, #8, L2
 2361 like 2333 but
      u= 100 imp:n= 1.0
c     Cladding, #8, L2
 2362 like 2334 but
      u= 100 imp:n= 1.0
```

```
c     Water Outside Cladding #8, L2
 2363 like 2335 but
      u= 100 imp:n= 1.0
c     Reference Fuel Rod Cell, L2
 2364    79 -1.1790E+00 -43 44 45 -46 lat= 1 u = 101 imp:n= 1.0
      fill= -1:7 -1:7 0:0
        101 101 101 101 101 101 101 101 101
        101  98  98  97  97  97  97  98 101
        101  98  96  96  93  93  94  97 101
        101  97  96 100  93  93  93  94 101
        101  97  93  93  95  93  99  94 101
        101  97  93  93  93  93  93  94 101
        101  97  94  93  99  93  93  94 101
        101  98  97  94  94  94  94  97 101
        101 101 101 101 101 101 101 101 101
c     Channel, L2
 2365    18 -6.5600E+00 ( 47 -48 -49 50):( -51 52 53 -54):
      ( -55 56 53 -54):( 57 -58 50 -49):
      ( -59 60 49 -53):( -61 62 49 54):
      ( -63 64 54 -50):( -65 66 -50 -53)
      u= 102 imp:n= 1.0
c     Active Fuel Area, L2
 2366    79 -1.1790E+00 ( 53 -54 -52 55):( 48 -53 -49 50 ):
      ( 54 -57 -49 50):( -60 -53 49):
      ( -62 54 49):( -64 54 -50):
      ( -66 -53 -50)
      fill= 101 u= 102 imp:n= 1.0
c     Water Outside of Channel, L2
 2367     2 -9.8114E-01 ( -47 :  51 :  58 :  -56 ):
      ( 59 -53 49 ):
      ( 61 54 49 ):
      ( 63 54 -50 ):
      ( 65 -53 -50 )
      u= 102 imp:n= 1.0
c     Fuel Pellet, #1, L3
 2368    27 -1.0340E+01 -40      u= 103 imp:n= 1.0
c     Fuel/Cladding Gap, #1, L3
 2369     0 40 -41      u= 103 imp:n= 1.0
c     Cladding, #1, L3
 2370    10 -6.5600E+00 41 -42      u= 103 imp:n= 1.0
c     Water Outside Cladding #1, L3
 2371    79 -1.1790E+00 42
      u= 103 imp:n= 1.0
c     Fuel Pellet, #2, L3
 2372 like 2368 but
      mat= 28 rho= -9.9400E+00
      u= 104 imp:n= 1.0
c     Fuel/Cladding Gap, #2, L3
 2373 like 2369 but
      u= 104 imp:n= 1.0
c     Cladding, #2, L3
 2374 like 2370 but
      u= 104 imp:n= 1.0
c     Water Outside Cladding #2, L3
 2375 like 2371 but
      u= 104 imp:n= 1.0
c     Fuel Pellet, #3, L3
 2376 like 2368 but
      mat= 29 rho= -9.4800E+00
      u= 105 imp:n= 1.0
c     Fuel/Cladding Gap, #3, L3
 2377 like 2369 but
      u= 105 imp:n= 1.0
c     Cladding, #3, L3
 2378 like 2370 but
      u= 105 imp:n= 1.0
c     Water Outside Cladding #3, L3
 2379 like 2371 but
      u= 105 imp:n= 1.0
c     Fuel Pellet, #4, L3
```

```
 2380 like 2368 but
      mat= 30 rho= -1.0340E+01
      u= 106 imp:n= 1.0
c     Fuel/Cladding Gap, #4, L3
 2381 like 2369 but
      u= 106 imp:n= 1.0
c     Cladding, #4, L3
 2382 like 2370 but
      u= 106 imp:n= 1.0
c     Water Outside Cladding #4, L3
 2383 like 2371 but
      u= 106 imp:n= 1.0
c     Fuel Pellet, #5, L3
 2384 like 2368 but
      mat= 31 rho= -9.9400E+00
      u= 107 imp:n= 1.0
c     Fuel/Cladding Gap, #5, L3
 2385 like 2369 but
      u= 107 imp:n= 1.0
c     Cladding, #5, L3
 2386 like 2370 but
      u= 107 imp:n= 1.0
c     Water Outside Cladding #5, L3
 2387 like 2371 but
      u= 107 imp:n= 1.0
c     Fuel Pellet, #6, L3
 2388 like 2368 but
      mat= 32 rho= -9.9400E+00
      u= 108 imp:n= 1.0
c     Fuel/Cladding Gap, #6, L3
 2389 like 2369 but
      u= 108 imp:n= 1.0
c     Cladding, #6, L3
 2390 like 2370 but
      u= 108 imp:n= 1.0
c     Water Outside Cladding #6, L3
 2391 like 2371 but
      u= 108 imp:n= 1.0
c     Fuel Pellet, #7, L3
 2392 like 2368 but
      mat= 33 rho= -1.0300E+01
      u= 109 imp:n= 1.0
c     Fuel/Cladding Gap, #7, L3
 2393 like 2369 but
      u= 109 imp:n= 1.0
c     Cladding, #7, L3
 2394 like 2370 but
      u= 109 imp:n= 1.0
c     Water Outside Cladding #7, L3
 2395 like 2371 but
      u= 109 imp:n= 1.0
c     Fuel Pellet, #8, L3
 2396 like 2368 but
      mat= 34 rho= -1.0340E+01
      u= 110 imp:n= 1.0
c     Fuel/Cladding Gap, #8, L3
 2397 like 2369 but
      u= 110 imp:n= 1.0
c     Cladding, #8, L3
 2398 like 2370 but
      u= 110 imp:n= 1.0
c     Water Outside Cladding #8, L3
 2399 like 2371 but
      u= 110 imp:n= 1.0
c     Reference Fuel Rod Cell, L3
 2400    79 -1.1790E+00 -43 44 45 -46 lat= 1 u = 111 imp:n= 1.0
      fill= -1:7 -1:7 0:0
        111 111 111 111 111 111 111 111 111
        111 108 108 107 107 107 107 108 111
        111 108 106 106 103 103 104 107 111
```

```
          111 107 106 110 103 103 103 104 111
          111 107 103 103 105 103 109 104 111
          111 107 103 103 103 103 103 104 111
          111 107 104 103 109 103 103 104 111
          111 108 107 104 104 104 104 107 111
          111 111 111 111 111 111 111 111 111
c      Channel, L3
 2401    18 -6.5600E+00 ( 47 -48 -49 50):( -51 52 53 -54):
       ( -55 56 53 -54):( 57 -58 50 -49):
       ( -59 60 49 -53):( -61 62 49 54):
       ( -63 64 54 -50):( -65 66 -50 -53)
       u= 112 imp:n= 1.0
c      Active Fuel Area, L3
 2402    79 -1.1790E+00 ( 53 -54 -52 55):( 48 -53 -49 50 ):
       ( 54 -57 -49 50):( -60 -53 49):
       ( -62 54 49):( -64 54 -50):
       ( -66 -53 -50)
       fill= 111 u= 112 imp:n= 1.0
c      Water Outside of Channel, L3
 2403     2 -9.8114E-01 ( -47 :  51 :  58 :  -56 ):
       ( 59 -53 49 ):
       ( 61 54 49 ):
       ( 63 54 -50 ):
       ( 65 -53 -50 )
       u= 112 imp:n= 1.0
c      Fuel Pellet, #1, L5
 2404    41 -1.0340E+01 -40      u= 113 imp:n= 1.0
c      Fuel/Cladding Gap, #1, L5
 2405     0 40 -41      u= 113 imp:n= 1.0
c      Cladding, #1, L5
 2406    10 -6.5600E+00 41 -42      u= 113 imp:n= 1.0
c      Water Outside Cladding #1, L5
 2407    79 -1.1790E+00 42
       u= 113 imp:n= 1.0
c      Fuel Pellet, #2, L5
 2408 like 2404 but
       mat= 42 rho= -9.4800E+00
       u= 114 imp:n= 1.0
c      Fuel/Cladding Gap, #2, L5
 2409 like 2405 but
       u= 114 imp:n= 1.0
c      Cladding, #2, L5
 2410 like 2406 but
       u= 114 imp:n= 1.0
c      Water Outside Cladding #2, L5
 2411 like 2407 but
       u= 114 imp:n= 1.0
c      Fuel Pellet, #3, L5
 2412 like 2404 but
       mat= 43 rho= -1.0340E+01
       u= 115 imp:n= 1.0
c      Fuel/Cladding Gap, #3, L5
 2413 like 2405 but
       u= 115 imp:n= 1.0
c      Cladding, #3, L5
 2414 like 2406 but
       u= 115 imp:n= 1.0
c      Water Outside Cladding #3, L5
 2415 like 2407 but
       u= 115 imp:n= 1.0
c      Fuel Pellet, #4, L5
 2416 like 2404 but
       mat= 44 rho= -1.0340E+01
       u= 116 imp:n= 1.0
c      Fuel/Cladding Gap, #4, L5
 2417 like 2405 but
       u= 116 imp:n= 1.0
c      Cladding, #4, L5
 2418 like 2406 but
       u= 116 imp:n= 1.0
```

```
c     Water Outside Cladding #4, L5
 2419 like 2407 but
      u= 116 imp:n= 1.0
c     Fuel Pellet, #5, L5
 2420 like 2404 but
      mat= 45 rho= -1.0260E+01
      u= 117 imp:n= 1.0
c     Fuel/Cladding Gap, #5, L5
 2421 like 2405 but
      u= 117 imp:n= 1.0
c     Cladding, #5, L5
 2422 like 2406 but
      u= 117 imp:n= 1.0
c     Water Outside Cladding #5, L5
 2423 like 2407 but
      u= 117 imp:n= 1.0
c     Fuel Pellet, #6, L5
 2424 like 2404 but
      mat= 46 rho= -1.0340E+01
      u= 118 imp:n= 1.0
c     Fuel/Cladding Gap, #6, L5
 2425 like 2405 but
      u= 118 imp:n= 1.0
c     Cladding, #6, L5
 2426 like 2406 but
      u= 118 imp:n= 1.0
c     Water Outside Cladding #6, L5
 2427 like 2407 but
      u= 118 imp:n= 1.0
c     Reference Fuel Rod Cell, L5
 2428   79 -1.1790E+00 -43 44 45 -46 lat= 1 u = 119 imp:n= 1.0
      fill= -1:7 -1:7 0:0
        119 119 119 119 119 119 119 119 119
        119 116 116 115 115 115 115 116 119
        119 116 115 115 113 113 113 115 119
        119 115 115 118 113 113 113 113 119
        119 115 113 113 114 113 117 113 119
        119 115 113 113 113 113 113 113 119
        119 115 113 113 117 113 113 113 119
        119 116 115 113 113 113 113 115 119
        119 119 119 119 119 119 119 119 119
c     Channel, L5
 2429    18 -6.5600E+00 ( 47 -48 -49 50):( -51 52 53 -54):
      ( -55 56 53 -54):( 57 -58 50 -49):
      ( -59 60 49 -53):( -61 62 49 54):
      ( -63 64 54 -50):( -65 66 -50 -53)
      u= 120 imp:n= 1.0
c     Active Fuel Area, L5
 2430    79 -1.1790E+00 ( 53 -54 -52 55):( 48 -53 -49 50 ):
      ( 54 -57 -49 50):( -60 -53 49):
      ( -62 54 49):( -64 54 -50):
      ( -66 -53 -50)
      fill= 119 u= 120 imp:n= 1.0
c     Water Outside of Channel, L5
 2431     2 -9.8114E-01 ( -47 :  51 :  58 :  -56 ):
      ( 59 -53 49 ):
      ( 61 54 49 ):
      ( 63 54 -50 ):
      ( 65 -53 -50 )
      u= 120 imp:n= 1.0
c     Fuel Pellet, #1, L6
 2432    47 -1.0340E+01 -40       u= 121 imp:n= 1.0
c     Fuel/Cladding Gap, #1, L6
 2433     0 40 -41       u= 121 imp:n= 1.0
c     Cladding, #1, L6
 2434    10 -6.5600E+00 41 -42       u= 121 imp:n= 1.0
c     Water Outside Cladding #1, L6
 2435    79 -1.1790E+00 42
      u= 121 imp:n= 1.0
c     Fuel Pellet, #2, L6
```

```
 2436 like 2432 but
      mat= 48 rho= -9.4800E+00
      u= 122 imp:n= 1.0
c     Fuel/Cladding Gap, #2, L6
 2437 like 2433 but
      u= 122 imp:n= 1.0
c     Cladding, #2, L6
 2438 like 2434 but
      u= 122 imp:n= 1.0
c     Water Outside Cladding #2, L6
 2439 like 2435 but
      u= 122 imp:n= 1.0
c     Fuel Pellet, #3, L6
 2440 like 2432 but
      mat= 49 rho= -1.0340E+01
      u= 123 imp:n= 1.0
c     Fuel/Cladding Gap, #3, L6
 2441 like 2433 but
      u= 123 imp:n= 1.0
c     Cladding, #3, L6
 2442 like 2434 but
      u= 123 imp:n= 1.0
c     Water Outside Cladding #3, L6
 2443 like 2435 but
      u= 123 imp:n= 1.0
c     Fuel Pellet, #4, L6
 2444 like 2432 but
      mat= 50 rho= -1.0340E+01
      u= 124 imp:n= 1.0
c     Fuel/Cladding Gap, #4, L6
 2445 like 2433 but
      u= 124 imp:n= 1.0
c     Cladding, #4, L6
 2446 like 2434 but
      u= 124 imp:n= 1.0
c     Water Outside Cladding #4, L6
 2447 like 2435 but
      u= 124 imp:n= 1.0
c     Fuel Pellet, #5, L6
 2448 like 2432 but
      mat= 51 rho= -1.0260E+01
      u= 125 imp:n= 1.0
c     Fuel/Cladding Gap, #5, L6
 2449 like 2433 but
      u= 125 imp:n= 1.0
c     Cladding, #5, L6
 2450 like 2434 but
      u= 125 imp:n= 1.0
c     Water Outside Cladding #5, L6
 2451 like 2435 but
      u= 125 imp:n= 1.0
c     Fuel Pellet, #6, L6
 2452 like 2432 but
      mat= 52 rho= -1.0340E+01
      u= 126 imp:n= 1.0
c     Fuel/Cladding Gap, #6, L6
 2453 like 2433 but
      u= 126 imp:n= 1.0
c     Cladding, #6, L6
 2454 like 2434 but
      u= 126 imp:n= 1.0
c     Water Outside Cladding #6, L6
 2455 like 2435 but
      u= 126 imp:n= 1.0
c     Reference Fuel Rod Cell, L6
 2456    79 -1.1790E+00 -43 44 45 -46 lat= 1 u = 127 imp:n= 1.0
      fill= -1:7 -1:7 0:0
        127 127 127 127 127 127 127 127 127
        127 124 124 123 123 123 123 124 127
        127 124 123 123 121 121 121 123 127
```

```
        127 123 123 126 121 121 121 121 127
        127 123 121 121 122 121 125 121 127
        127 123 121 121 121 121 121 121 127
        127 123 121 121 125 121 121 121 127
        127 124 123 121 121 121 121 123 127
        127 127 127 127 127 127 127 127 127
c     Channel, L6
 2457    18 -6.5600E+00 ( 47 -48 -49 50):( -51 52 53 -54):
      ( -55 56 53 -54):( 57 -58 50 -49):
      ( -59 60 49 -53):( -61 62 49 54):
      ( -63 64 54 -50):( -65 66 -50 -53)
      u= 128 imp:n= 1.0
c     Active Fuel Area, L6
 2458    79 -1.1790E+00 ( 53 -54 -52 55):( 48 -53 -49 50 ):
      ( 54 -57 -49 50):( -60 -53 49):
      ( -62 54 49):( -64 54 -50):
      ( -66 -53 -50)
      fill= 127 u= 128 imp:n= 1.0
c     Water Outside of Channel, L6
 2459     2 -9.8114E-01 ( -47 :  51 :  58 :  -56 ):
      ( 59 -53 49 ):
      ( 61 54 49 ):
      ( 63 54 -50 ):
      ( 65 -53 -50 )
      u= 128 imp:n= 1.0
c     Fuel Pellet, #1, L8
 2460    60 -1.0340E+01 -40      u= 129 imp:n= 1.0
c     Fuel/Cladding Gap, #1, L8
 2461     0 40 -41      u= 129 imp:n= 1.0
c     Cladding, #1, L8
 2462    10 -6.5600E+00 41 -42      u= 129 imp:n= 1.0
c     Water Outside Cladding #1, L8
 2463    79 -1.1790E+00 42
      u= 129 imp:n= 1.0
c     Fuel Pellet, #2, L8
 2464 like 2460 but
      mat= 61 rho= -9.9400E+00
      u= 130 imp:n= 1.0
c     Fuel/Cladding Gap, #2, L8
 2465 like 2461 but
      u= 130 imp:n= 1.0
c     Cladding, #2, L8
 2466 like 2462 but
      u= 130 imp:n= 1.0
c     Water Outside Cladding #2, L8
 2467 like 2463 but
      u= 130 imp:n= 1.0
c     Fuel Pellet, #3, L8
 2468 like 2460 but
      mat= 62 rho= -9.4800E+00
      u= 131 imp:n= 1.0
c     Fuel/Cladding Gap, #3, L8
 2469 like 2461 but
      u= 131 imp:n= 1.0
c     Cladding, #3, L8
 2470 like 2462 but
      u= 131 imp:n= 1.0
c     Water Outside Cladding #3, L8
 2471 like 2463 but
      u= 131 imp:n= 1.0
c     Fuel Pellet, #4, L8
 2472 like 2460 but
      mat= 63 rho= -1.0340E+01
      u= 132 imp:n= 1.0
c     Fuel/Cladding Gap, #4, L8
 2473 like 2461 but
      u= 132 imp:n= 1.0
c     Cladding, #4, L8
 2474 like 2462 but
      u= 132 imp:n= 1.0
```

```
c     Water Outside Cladding #4, L8
 2475 like 2463 but
      u= 132 imp:n= 1.0
c     Fuel Pellet, #5, L8
 2476 like 2460 but
      mat= 64 rho= -9.9400E+00
      u= 133 imp:n= 1.0
c     Fuel/Cladding Gap, #5, L8
 2477 like 2461 but
      u= 133 imp:n= 1.0
c     Cladding, #5, L8
 2478 like 2462 but
      u= 133 imp:n= 1.0
c     Water Outside Cladding #5, L8
 2479 like 2463 but
      u= 133 imp:n= 1.0
c     Fuel Pellet, #6, L8
 2480 like 2460 but
      mat= 65 rho= -9.9400E+00
      u= 134 imp:n= 1.0
c     Fuel/Cladding Gap, #6, L8
 2481 like 2461 but
      u= 134 imp:n= 1.0
c     Cladding, #6, L8
 2482 like 2462 but
      u= 134 imp:n= 1.0
c     Water Outside Cladding #6, L8
 2483 like 2463 but
      u= 134 imp:n= 1.0
c     Fuel Pellet, #7, L8
 2484 like 2460 but
      mat= 66 rho= -1.0290E+01
      u= 135 imp:n= 1.0
c     Fuel/Cladding Gap, #7, L8
 2485 like 2461 but
      u= 135 imp:n= 1.0
c     Cladding, #7, L8
 2486 like 2462 but
      u= 135 imp:n= 1.0
c     Water Outside Cladding #7, L8
 2487 like 2463 but
      u= 135 imp:n= 1.0
c     Reference Fuel Rod Cell, L8
 2488    79 -1.1790E+00 -43 44 45 -46 lat= 1 u = 136 imp:n= 1.0
      fill= -1:7 -1:7 0:0
        136 136 136 136 136 136 136 136 136
        136 134 134 133 133 133 133 134 136
        136 134 132 132 129 129 130 133 136
        136 133 132 129 129 129 129 130 136
        136 133 129 129 131 129 135 130 136
        136 133 129 129 129 129 129 130 136
        136 133 130 129 135 129 129 130 136
        136 134 133 130 130 130 130 133 136
        136 136 136 136 136 136 136 136 136
c     Channel, L8
 2489    18 -6.5600E+00 ( 47 -48 -49 50):( -51 52 53 -54):
      ( -55 56 53 -54):( 57 -58 50 -49):
      ( -59 60 49 -53):( -61 62 49 54):
      ( -63 64 54 -50):( -65 66 -50 -53)
      u= 137 imp:n= 1.0
c     Active Fuel Area, L8
 2490    79 -1.1790E+00 ( 53 -54 -52 55):( 48 -53 -49 50 ):
      ( 54 -57 -49 50):( -60 -53 49):
      ( -62 54 49):( -64 54 -50):
      ( -66 -53 -50)
      fill= 136 u= 137 imp:n= 1.0
c     Water Outside of Channel, L8
 2491     2 -9.8114E-01 ( -47 :  51 :  58 :  -56 ):
      ( 59 -53 49 ):
      ( 61 54 49 ):
```

```
      ( 63 54 -50 ):
      ( 65 -53 -50 )
      u= 137 imp:n= 1.0
c     Fuel Pellet, #1, L10
 2492    72 -1.0340E+01 -40      u= 138 imp:n= 1.0
c     Fuel/Cladding Gap, #1, L10
 2493     0 40 -41      u= 138 imp:n= 1.0
c     Cladding, #1, L10
 2494    10 -6.5600E+00 41 -42      u= 138 imp:n= 1.0
c     Water Outside Cladding #1, L10
 2495    79 -1.1790E+00 42
      u= 138 imp:n= 1.0
c     Fuel Pellet, #2, L10
 2496 like 2492 but
      mat= 73 rho= -9.9400E+00
      u= 139 imp:n= 1.0
c     Fuel/Cladding Gap, #2, L10
 2497 like 2493 but
      u= 139 imp:n= 1.0
c     Cladding, #2, L10
 2498 like 2494 but
      u= 139 imp:n= 1.0
c     Water Outside Cladding #2, L10
 2499 like 2495 but
      u= 139 imp:n= 1.0
c     Fuel Pellet, #3, L10
 2500 like 2492 but
      mat= 74 rho= -9.4800E+00
      u= 140 imp:n= 1.0
c     Fuel/Cladding Gap, #3, L10
 2501 like 2493 but
      u= 140 imp:n= 1.0
c     Cladding, #3, L10
 2502 like 2494 but
      u= 140 imp:n= 1.0
c     Water Outside Cladding #3, L10
 2503 like 2495 but
      u= 140 imp:n= 1.0
c     Fuel Pellet, #4, L10
 2504 like 2492 but
      mat= 75 rho= -1.0340E+01
      u= 141 imp:n= 1.0
c     Fuel/Cladding Gap, #4, L10
 2505 like 2493 but
      u= 141 imp:n= 1.0
c     Cladding, #4, L10
 2506 like 2494 but
      u= 141 imp:n= 1.0
c     Water Outside Cladding #4, L10
 2507 like 2495 but
      u= 141 imp:n= 1.0
c     Fuel Pellet, #5, L10
 2508 like 2492 but
      mat= 76 rho= -9.9400E+00
      u= 142 imp:n= 1.0
c     Fuel/Cladding Gap, #5, L10
 2509 like 2493 but
      u= 142 imp:n= 1.0
c     Cladding, #5, L10
 2510 like 2494 but
      u= 142 imp:n= 1.0
c     Water Outside Cladding #5, L10
 2511 like 2495 but
      u= 142 imp:n= 1.0
c     Fuel Pellet, #6, L10
 2512 like 2492 but
      mat= 77 rho= -9.9400E+00
      u= 143 imp:n= 1.0
c     Fuel/Cladding Gap, #6, L10
 2513 like 2493 but
```

```
      u= 143 imp:n= 1.0
c     Cladding, #6, L10
 2514 like 2494 but
      u= 143 imp:n= 1.0
c     Water Outside Cladding #6, L10
 2515 like 2495 but
      u= 143 imp:n= 1.0
c     Fuel Pellet, #7, L10
 2516 like 2492 but
      mat= 78 rho= -1.0290E+01
      u= 144 imp:n= 1.0
c     Fuel/Cladding Gap, #7, L10
 2517 like 2493 but
      u= 144 imp:n= 1.0
c     Cladding, #7, L10
 2518 like 2494 but
      u= 144 imp:n= 1.0
c     Water Outside Cladding #7, L10
 2519 like 2495 but
      u= 144 imp:n= 1.0
c     Reference Fuel Rod Cell, L10
 2520    79 -1.1790E+00 -43 44 45 -46 lat= 1 u = 145 imp:n= 1.0
      fill= -1:7 -1:7 0:0
        145 145 145 145 145 145 145 145 145
        145 143 143 142 142 142 142 143 145
        145 143 141 141 138 138 139 142 145
        145 142 141 138 138 138 138 139 145
        145 142 138 138 140 138 144 139 145
        145 142 138 138 138 138 138 139 145
        145 142 139 138 144 138 138 139 145
        145 143 142 139 139 139 139 142 145
        145 145 145 145 145 145 145 145 145
c     Channel, L10
 2521    18 -6.5600E+00 ( 47 -48 -49 50):( -51 52 53 -54):
      ( -55 56 53 -54):( 57 -58 50 -49):
      ( -59 60 49 -53):( -61 62 49 54):
      ( -63 64 54 -50):( -65 66 -50 -53)
      u= 146 imp:n= 1.0
c     Active Fuel Area, L10
 2522    79 -1.1790E+00 ( 53 -54 -52 55):( 48 -53 -49 50 ):
      ( 54 -57 -49 50):( -60 -53 49):
      ( -62 54 49):( -64 54 -50):
      ( -66 -53 -50)
      fill= 145 u= 146 imp:n= 1.0
c     Water Outside of Channel, L10
 2523     2 -9.8114E-01 ( -47 :  51 :  58 :  -56 ):
      ( 59 -53 49 ):
      ( 61 54 49 ):
      ( 63 54 -50 ):
      ( 65 -53 -50 )
      u= 146 imp:n= 1.0
c     Axial Node 1 for Fuel Assembly 1
 2524     0 -67
      fill= 14
      u= 147 imp:n= 1.0
c     Axial Node 2 for Fuel Assembly 1
 2525     0 67 -68
      fill= 24
      u= 147 imp:n= 1.0
c     Axial Node 3 for Fuel Assembly 1
 2526     0 68 -69
      fill= 24
      u= 147 imp:n= 1.0
c     Axial Node 4 for Fuel Assembly 1
 2527     0 69 -70
      fill= 102
      u= 147 imp:n= 1.0
c     Axial Node 5 for Fuel Assembly 1
 2528     0 70 -71
      fill= 24
```

```
      u= 147 imp:n= 1.0
c     Axial Node 6 for Fuel Assembly 1
 2529     0 71 -72
      fill= 24
      u= 147 imp:n= 1.0
c     Axial Node 7 for Fuel Assembly 1
 2530     0 72 -73
      fill= 102
      u= 147 imp:n= 1.0
c     Axial Node 8 for Fuel Assembly 1
 2531     0 73 -74
      fill= 24
      u= 147 imp:n= 1.0
c     Axial Node 9 for Fuel Assembly 1
 2532     0 74 -75
      fill= 34
      u= 147 imp:n= 1.0
c     Axial Node 10 for Fuel Assembly 1
 2533     0 75 -76
      fill= 112
      u= 147 imp:n= 1.0
c     Axial Node 11 for Fuel Assembly 1
 2534     0 76 -77
      fill= 34
      u= 147 imp:n= 1.0
c     Axial Node 12 for Fuel Assembly 1
 2535     0 77 -78
      fill= 34
      u= 147 imp:n= 1.0
c     Axial Node 13 for Fuel Assembly 1
 2536     0 78 -79
      fill= 112
      u= 147 imp:n= 1.0
c     Axial Node 14 for Fuel Assembly 1
 2537     0 79 -80
      fill= 34
      u= 147 imp:n= 1.0
c     Axial Node 15 for Fuel Assembly 1
 2538     0 80 -81
      fill= 34
      u= 147 imp:n= 1.0
c     Axial Node 16 for Fuel Assembly 1
 2539     0 81 -82
      fill= 34
      u= 147 imp:n= 1.0
c     Axial Node 17 for Fuel Assembly 1
 2540     0 82 -83
      fill= 112
      u= 147 imp:n= 1.0
c     Axial Node 18 for Fuel Assembly 1
 2541     0 83 -84
      fill= 34
      u= 147 imp:n= 1.0
c     Axial Node 19 for Fuel Assembly 1
 2542     0 84 -85
      fill= 24
      u= 147 imp:n= 1.0
c     Axial Node 20 for Fuel Assembly 1
 2543     0 85 -86
      fill= 102
      u= 147 imp:n= 1.0
c     Axial Node 21 for Fuel Assembly 1
 2544     0 86 -87
      fill= 24
      u= 147 imp:n= 1.0
c     Axial Node 22 for Fuel Assembly 1
 2545     0 87 -88
      fill= 24
      u= 147 imp:n= 1.0
c     Axial Node 23 for Fuel Assembly 1
```

```
 2546      0 88 -89
      fill= 102
      u= 147 imp:n= 1.0
c     Axial Node 24 for Fuel Assembly 1
 2547      0 89
      fill= 14
      u= 147 imp:n= 1.0
c     Axial Node 1 for Fuel Assembly 2
 2548      0 -67
      fill= 42
      u= 148 imp:n= 1.0
c     Axial Node 2 for Fuel Assembly 2
 2549      0 67 -68
      fill= 50
      u= 148 imp:n= 1.0
c     Axial Node 3 for Fuel Assembly 2
 2550      0 68 -69
      fill= 50
      u= 148 imp:n= 1.0
c     Axial Node 4 for Fuel Assembly 2
 2551      0 69 -70
      fill= 120
      u= 148 imp:n= 1.0
c     Axial Node 5 for Fuel Assembly 2
 2552      0 70 -71
      fill= 50
      u= 148 imp:n= 1.0
c     Axial Node 6 for Fuel Assembly 2
 2553      0 71 -72
      fill= 50
      u= 148 imp:n= 1.0
c     Axial Node 7 for Fuel Assembly 2
 2554      0 72 -73
      fill= 120
      u= 148 imp:n= 1.0
c     Axial Node 8 for Fuel Assembly 2
 2555      0 73 -74
      fill= 50
      u= 148 imp:n= 1.0
c     Axial Node 9 for Fuel Assembly 2
 2556      0 74 -75
      fill= 58
      u= 148 imp:n= 1.0
c     Axial Node 10 for Fuel Assembly 2
 2557      0 75 -76
      fill= 128
      u= 148 imp:n= 1.0
c     Axial Node 11 for Fuel Assembly 2
 2558      0 76 -77
      fill= 58
      u= 148 imp:n= 1.0
c     Axial Node 12 for Fuel Assembly 2
 2559      0 77 -78
      fill= 58
      u= 148 imp:n= 1.0
c     Axial Node 13 for Fuel Assembly 2
 2560      0 78 -79
      fill= 128
      u= 148 imp:n= 1.0
c     Axial Node 14 for Fuel Assembly 2
 2561      0 79 -80
      fill= 58
      u= 148 imp:n= 1.0
c     Axial Node 15 for Fuel Assembly 2
 2562      0 80 -81
      fill= 58
      u= 148 imp:n= 1.0
c     Axial Node 16 for Fuel Assembly 2
 2563      0 81 -82
      fill= 58
```

```
      u= 148 imp:n= 1.0
c     Axial Node 17 for Fuel Assembly 2
 2564     0 82 -83
      fill= 128
      u= 148 imp:n= 1.0
c     Axial Node 18 for Fuel Assembly 2
 2565     0 83 -84
      fill= 58
      u= 148 imp:n= 1.0
c     Axial Node 19 for Fuel Assembly 2
 2566     0 84 -85
      fill= 50
      u= 148 imp:n= 1.0
c     Axial Node 20 for Fuel Assembly 2
 2567     0 85 -86
      fill= 120
      u= 148 imp:n= 1.0
c     Axial Node 21 for Fuel Assembly 2
 2568     0 86 -87
      fill= 50
      u= 148 imp:n= 1.0
c     Axial Node 22 for Fuel Assembly 2
 2569     0 87 -88
      fill= 50
      u= 148 imp:n= 1.0
c     Axial Node 23 for Fuel Assembly 2
 2570     0 88 -89
      fill= 120
      u= 148 imp:n= 1.0
c     Axial Node 24 for Fuel Assembly 2
 2571     0 89
      fill= 42
      u= 148 imp:n= 1.0
c     Axial Node 1 for Fuel Assembly 3
 2572     0 -67
      fill= 67
      u= 149 imp:n= 1.0
c     Axial Node 2 for Fuel Assembly 3
 2573     0 67 -68
      fill= 76
      u= 149 imp:n= 1.0
c     Axial Node 3 for Fuel Assembly 3
 2574     0 68 -69
      fill= 76
      u= 149 imp:n= 1.0
c     Axial Node 4 for Fuel Assembly 3
 2575     0 69 -70
      fill= 137
      u= 149 imp:n= 1.0
c     Axial Node 5 for Fuel Assembly 3
 2576     0 70 -71
      fill= 76
      u= 149 imp:n= 1.0
c     Axial Node 6 for Fuel Assembly 3
 2577     0 71 -72
      fill= 76
      u= 149 imp:n= 1.0
c     Axial Node 7 for Fuel Assembly 3
 2578     0 72 -73
      fill= 137
      u= 149 imp:n= 1.0
c     Axial Node 8 for Fuel Assembly 3
 2579     0 73 -74
      fill= 76
      u= 149 imp:n= 1.0
c     Axial Node 9 for Fuel Assembly 3
 2580     0 74 -75
      fill= 76
      u= 149 imp:n= 1.0
c     Axial Node 10 for Fuel Assembly 3
```

```
 2581     0 75 -76
      fill= 137
      u= 149 imp:n= 1.0
c     Axial Node 11 for Fuel Assembly 3
 2582     0 76 -77
      fill= 76
      u= 149 imp:n= 1.0
c     Axial Node 12 for Fuel Assembly 3
 2583     0 77 -78
      fill= 76
      u= 149 imp:n= 1.0
c     Axial Node 13 for Fuel Assembly 3
 2584     0 78 -79
      fill= 137
      u= 149 imp:n= 1.0
c     Axial Node 14 for Fuel Assembly 3
 2585     0 79 -80
      fill= 76
      u= 149 imp:n= 1.0
c     Axial Node 15 for Fuel Assembly 3
 2586     0 80 -81
      fill= 76
      u= 149 imp:n= 1.0
c     Axial Node 16 for Fuel Assembly 3
 2587     0 81 -82
      fill= 76
      u= 149 imp:n= 1.0
c     Axial Node 17 for Fuel Assembly 3
 2588     0 82 -83
      fill= 137
      u= 149 imp:n= 1.0
c     Axial Node 18 for Fuel Assembly 3
 2589     0 83 -84
      fill= 76
      u= 149 imp:n= 1.0
c     Axial Node 19 for Fuel Assembly 3
 2590     0 84 -85
      fill= 76
      u= 149 imp:n= 1.0
c     Axial Node 20 for Fuel Assembly 3
 2591     0 85 -86
      fill= 137
      u= 149 imp:n= 1.0
c     Axial Node 21 for Fuel Assembly 3
 2592     0 86 -87
      fill= 76
      u= 149 imp:n= 1.0
c     Axial Node 22 for Fuel Assembly 3
 2593     0 87 -88
      fill= 76
      u= 149 imp:n= 1.0
c     Axial Node 23 for Fuel Assembly 3
 2594     0 88 -89
      fill= 137
      u= 149 imp:n= 1.0
c     Axial Node 24 for Fuel Assembly 3
 2595     0 89
      fill= 67
      u= 149 imp:n= 1.0
c     Axial Node 1 for Fuel Assembly 4
 2596     0 -67
      fill= 83
      u= 150 imp:n= 1.0
c     Axial Node 2 for Fuel Assembly 4
 2597     0 67 -68
      fill= 92
      u= 150 imp:n= 1.0
c     Axial Node 3 for Fuel Assembly 4
 2598     0 68 -69
      fill= 92
```

```
      u= 150 imp:n= 1.0
c     Axial Node 4 for Fuel Assembly 4
 2599     0 69 -70
      fill= 146
      u= 150 imp:n= 1.0
c     Axial Node 5 for Fuel Assembly 4
 2600     0 70 -71
      fill= 92
      u= 150 imp:n= 1.0
c     Axial Node 6 for Fuel Assembly 4
 2601     0 71 -72
      fill= 92
      u= 150 imp:n= 1.0
c     Axial Node 7 for Fuel Assembly 4
 2602     0 72 -73
      fill= 146
      u= 150 imp:n= 1.0
c     Axial Node 8 for Fuel Assembly 4
 2603     0 73 -74
      fill= 92
      u= 150 imp:n= 1.0
c     Axial Node 9 for Fuel Assembly 4
 2604     0 74 -75
      fill= 92
      u= 150 imp:n= 1.0
c     Axial Node 10 for Fuel Assembly 4
 2605     0 75 -76
      fill= 146
      u= 150 imp:n= 1.0
c     Axial Node 11 for Fuel Assembly 4
 2606     0 76 -77
      fill= 92
      u= 150 imp:n= 1.0
c     Axial Node 12 for Fuel Assembly 4
 2607     0 77 -78
      fill= 92
      u= 150 imp:n= 1.0
c     Axial Node 13 for Fuel Assembly 4
 2608     0 78 -79
      fill= 146
      u= 150 imp:n= 1.0
c     Axial Node 14 for Fuel Assembly 4
 2609     0 79 -80
      fill= 92
      u= 150 imp:n= 1.0
c     Axial Node 15 for Fuel Assembly 4
 2610     0 80 -81
      fill= 92
      u= 150 imp:n= 1.0
c     Axial Node 16 for Fuel Assembly 4
 2611     0 81 -82
      fill= 92
      u= 150 imp:n= 1.0
c     Axial Node 17 for Fuel Assembly 4
 2612     0 82 -83
      fill= 146
      u= 150 imp:n= 1.0
c     Axial Node 18 for Fuel Assembly 4
 2613     0 83 -84
      fill= 92
      u= 150 imp:n= 1.0
c     Axial Node 19 for Fuel Assembly 4
 2614     0 84 -85
      fill= 92
      u= 150 imp:n= 1.0
c     Axial Node 20 for Fuel Assembly 4
 2615     0 85 -86
      fill= 146
      u= 150 imp:n= 1.0
c     Axial Node 21 for Fuel Assembly 4
```

```
 2616     0 86 -87
      fill= 92
      u= 150 imp:n= 1.0
c     Axial Node 22 for Fuel Assembly 4
 2617     0 87 -88
      fill= 92
      u= 150 imp:n= 1.0
c     Axial Node 23 for Fuel Assembly 4
 2618     0 88 -89
      fill= 146
      u= 150 imp:n= 1.0
c     Axial Node 24 for Fuel Assembly 4
 2619     0 89
      fill= 83
      u= 150 imp:n= 1.0
c     Fuel Assembly in Northwest Quadrant, CC151
    5     2 -9.8114E-01 (( -90 91 -92 93 )
      (#( -90 93 94 -95 96 )))
      u= 151 imp:n= 1.0
      *trcl=( 0.0 0.0 0.0  180 90 90 -90 180 90 90 90 0 )
      fill= 0
c      Fuel Assembly in Northeast Quadrant, CC151
    6 like 5 but fill= 0
      *trcl=( 0 0 0 90 0 90 180 90 90 90 90 0)
      u= 151 imp:n= 1.0
c     Fuel Assembly in Southeast Quadrant, CC151
    7 like 6 but fill= 149
      trcl=( 0 0 0 ) u= 151 imp:n= 1.0
c      Fuel Assembly in Southwest Quadrant, CC151
    8 like 5 but fill= 0
      *trcl=( 0 0 0 -90 180 90 0 -90 90 90 90 0) u= 151 imp:n= 1.0
c     Blade Window, CC151
    9     2 -9.8114E-01 ( 97 -98 99 -100 ):( 101 -102 103 -104)
      u= 151 imp:n= 1.0
c     Balance of Control Cell, CC151
   10 2 -9.8114E-01 #5 #6 #7 #8 #9
      u= 151 imp:n= 1.0
c     Fuel Assembly in Northwest Quadrant, CC152
   11     2 -9.8114E-01 (( -90 91 -92 93 )
      (#( -90 93 94 -95 96 )))
      u= 152 imp:n= 1.0
      *trcl=( 0.0 0.0 0.0  180 90 90 -90 180 90 90 90 0 )
      fill= 149
c      Fuel Assembly in Northeast Quadrant, CC152
   12 like 11 but fill= 149
      *trcl=( 0 0 0 90 0 90 180 90 90 90 90 0)
      u= 152 imp:n= 1.0
c     Fuel Assembly in Southeast Quadrant, CC152
   13 like 12 but fill= 147
      trcl=( 0 0 0 ) u= 152 imp:n= 1.0
c      Fuel Assembly in Southwest Quadrant, CC152
   14 like 11 but fill= 149
      *trcl=( 0 0 0 -90 180 90 0 -90 90 90 90 0) u= 152 imp:n= 1.0
c     Blade Window, CC152
   15     2 -9.8114E-01 ( 97 -98 99 -100 ):( 101 -102 103 -104)
      u= 152 imp:n= 1.0
      fill= 3 trcl=( 0.0 0.0 -3.6576E+02 )
c     Guide Tube Segment, CC152
   16     1 -7.9000E+00 -105 106 u= 152 imp:n= 1.0
c     Inside Guide Tube Segment, CC152
   17     0 -106 u= 152 imp:n= 1.0
c     Balance of Control Cell, CC152
   18 2 -9.8114E-01 #11 #12 #13 #14 #15 #16 #17
      u= 152 imp:n= 1.0
c     Fuel Assembly in Northwest Quadrant, CC153
   19     2 -9.8114E-01 (( -90 91 -92 93 )
      (#( -90 93 94 -95 96 )))
      u= 153 imp:n= 1.0
      *trcl=( 0.0 0.0 0.0  180 90 90 -90 180 90 90 90 0 )
      fill= 149
```

```
c      Fuel Assembly in Northeast Quadrant, CC153
   20 like 19 but fill= 149
      *trcl=( 0 0 0 90 0 90 180 90 90 90 90 0)
      u= 153 imp:n= 1.0
c     Fuel Assembly in Southeast Quadrant, CC153
   21 like 20 but fill= 147
      trcl=( 0 0 0 ) u= 153 imp:n= 1.0
c      Fuel Assembly in Southwest Quadrant, CC153
   22 like 19 but fill= 149
      *trcl=( 0 0 0 -90 180 90 0 -90 90 90 90 0) u= 153 imp:n= 1.0
c     Blade Window, CC153
   23     2 -9.8114E-01 ( 97 -98 99 -100 ):( 101 -102 103 -104)
      u= 153 imp:n= 1.0
      fill= 3 trcl=( 0.0 0.0 0.0000E+00 )
c     Guide Tube Segment, CC153
   24     1 -7.9000E+00 -105 106
      trcl=( -3.0480E+01 0.0 0.0) u= 153 imp:n= 1.0
c     Inside Guide Tube Segment, CC153
   25     0 -106       trcl=( -3.0480E+01 0.0 0.0) u= 153 imp:n= 1.0
c     Balance of Control Cell, CC153
   26 2 -9.8114E-01 #19 #20 #21 #22 #23 #24 #25
      u= 153 imp:n= 1.0
c     Fuel Assembly in Northwest Quadrant, CC154
   27     2 -9.8114E-01 (( -90 91 -92 93 )
      (#( -90 93 94 -95 96 )))
      u= 154 imp:n= 1.0
      *trcl=( 0.0 0.0 0.0  180 90 90 -90 180 90 90 90 0 )
      fill= 149
c      Fuel Assembly in Northeast Quadrant, CC154
   28 like 27 but fill= 0
      *trcl=( 0 0 0 90 0 90 180 90 90 90 90 0)
      u= 154 imp:n= 1.0
c     Fuel Assembly in Southeast Quadrant, CC154
   29 like 28 but fill= 0
      trcl=( 0 0 0 ) u= 154 imp:n= 1.0
c      Fuel Assembly in Southwest Quadrant, CC154
   30 like 27 but fill= 149
      *trcl=( 0 0 0 -90 180 90 0 -90 90 90 90 0) u= 154 imp:n= 1.0
c     Blade Window, CC154
   31     2 -9.8114E-01 ( 97 -98 99 -100 ):( 101 -102 103 -104)
      u= 154 imp:n= 1.0
      fill= 3 trcl=( 0.0 0.0 -3.6576E+02 )
c     Balance of Control Cell, CC154
   32 2 -9.8114E-01 #27 #28 #29 #30 #31
      u= 154 imp:n= 1.0
c     Fuel Assembly in Northwest Quadrant, CC155
   33     2 -9.8114E-01 (( -90 91 -92 93 )
      (#( -90 93 94 -95 96 )))
      u= 155 imp:n= 1.0
      *trcl=( 0.0 0.0 0.0  180 90 90 -90 180 90 90 90 0 )
      fill= 149
c      Fuel Assembly in Northeast Quadrant, CC155
   34 like 33 but fill= 149
      *trcl=( 0 0 0 90 0 90 180 90 90 90 90 0)
      u= 155 imp:n= 1.0
c     Fuel Assembly in Southeast Quadrant, CC155
   35 like 34 but fill= 147
      trcl=( 0 0 0 ) u= 155 imp:n= 1.0
c      Fuel Assembly in Southwest Quadrant, CC155
   36 like 33 but fill= 149
      *trcl=( 0 0 0 -90 180 90 0 -90 90 90 90 0) u= 155 imp:n= 1.0
c     Blade Window, CC155
   37     2 -9.8114E-01 ( 97 -98 99 -100 ):( 101 -102 103 -104)
      u= 155 imp:n= 1.0
      fill= 3 trcl=( 0.0 0.0 0.0000E+00 )
c     Guide Tube Segment, CC155
   38     1 -7.9000E+00 -105 106 u= 155 imp:n= 1.0
c     Inside Guide Tube Segment, CC155
   39     0 -106 u= 155 imp:n= 1.0
c     Balance of Control Cell, CC155
```

```
   40 2 -9.8114E-01 #33 #34 #35 #36 #37 #38 #39
      u= 155 imp:n= 1.0
c     Fuel Assembly in Northwest Quadrant, CC156
   41     2 -9.8114E-01 (( -90 91 -92 93 )
      (#( -90 93 94 -95 96 )))
      u= 156 imp:n= 1.0
      *trcl=( 0.0 0.0 0.0  180 90 90 -90 180 90 90 90 0 )
      fill= 147
c      Fuel Assembly in Northeast Quadrant, CC156
   42 like 41 but fill= 150
      *trcl=( 0 0 0 90 0 90 180 90 90 90 90 0)
      u= 156 imp:n= 1.0
c     Fuel Assembly in Southeast Quadrant, CC156
   43 like 42 but fill= 147
      trcl=( 0 0 0 ) u= 156 imp:n= 1.0
c      Fuel Assembly in Southwest Quadrant, CC156
   44 like 41 but fill= 150
      *trcl=( 0 0 0 -90 180 90 0 -90 90 90 90 0) u= 156 imp:n= 1.0
c     Blade Window, CC156
   45     2 -9.8114E-01 ( 97 -98 99 -100 ):( 101 -102 103 -104)
      u= 156 imp:n= 1.0
      fill= 3 trcl=( 0.0 0.0 0.0000E+00 )
c     Guide Tube Segment, CC156
   46     1 -7.9000E+00 -105 106
      trcl=( 0.0 3.0480E+01 0.0) u= 156 imp:n= 1.0
c     Inside Guide Tube Segment, CC156
   47     0 -106      trcl=( 0.0 3.0480E+01 0.0) u= 156 imp:n= 1.0
c     Balance of Control Cell, CC156
   48 2 -9.8114E-01 #41 #42 #43 #44 #45 #46 #47
      u= 156 imp:n= 1.0
c     Fuel Assembly in Northwest Quadrant, CC157
   49     2 -9.8114E-01 (( -90 91 -92 93 )
      (#( -90 93 94 -95 96 )))
      u= 157 imp:n= 1.0
      *trcl=( 0.0 0.0 0.0  180 90 90 -90 180 90 90 90 0 )
      fill= 147
c      Fuel Assembly in Northeast Quadrant, CC157
   50 like 49 but fill= 149
      *trcl=( 0 0 0 90 0 90 180 90 90 90 90 0)
      u= 157 imp:n= 1.0
c     Fuel Assembly in Southeast Quadrant, CC157
   51 like 50 but fill= 148
      trcl=( 0 0 0 ) u= 157 imp:n= 1.0
c      Fuel Assembly in Southwest Quadrant, CC157
   52 like 49 but fill= 150
      *trcl=( 0 0 0 -90 180 90 0 -90 90 90 90 0) u= 157 imp:n= 1.0
c     Blade Window, CC157
   53     2 -9.8114E-01 ( 97 -98 99 -100 ):( 101 -102 103 -104)
      u= 157 imp:n= 1.0
      fill= 3 trcl=( 0.0 0.0 0.0000E+00 )
c     Guide Tube Segment, CC157
   54     1 -7.9000E+00 -105 106
      trcl=( -3.0480E+01 3.0480E+01 0.0) u= 157 imp:n= 1.0
c     Inside Guide Tube Segment, CC157
   55     0 -106      trcl=( -3.0480E+01 3.0480E+01 0.0) u= 157 imp:n= 1.0
c     Balance of Control Cell, CC157
   56 2 -9.8114E-01 #49 #50 #51 #52 #53 #54 #55
      u= 157 imp:n= 1.0
c     Fuel Assembly in Northwest Quadrant, CC158
   57     2 -9.8114E-01 (( -90 91 -92 93 )
      (#( -90 93 94 -95 96 )))
      u= 158 imp:n= 1.0
      *trcl=( 0.0 0.0 0.0  180 90 90 -90 180 90 90 90 0 )
      fill= 147
c      Fuel Assembly in Northeast Quadrant, CC158
   58 like 57 but fill= 0
      *trcl=( 0 0 0 90 0 90 180 90 90 90 90 0)
      u= 158 imp:n= 1.0
c     Fuel Assembly in Southeast Quadrant, CC158
   59 like 58 but fill= 0
```

```
      trcl=( 0 0 0 ) u= 158 imp:n= 1.0
c      Fuel Assembly in Southwest Quadrant, CC158
   60 like 57 but fill= 150
      *trcl=( 0 0 0 -90 180 90 0 -90 90 90 90 0) u= 158 imp:n= 1.0
c     Blade Window, CC158
   61     2 -9.8114E-01 ( 97 -98 99 -100 ):( 101 -102 103 -104)
      u= 158 imp:n= 1.0
      fill= 3 trcl=( 0.0 0.0 0.0000E+00 )
c     Balance of Control Cell, CC158
   62 2 -9.8114E-01 #57 #58 #59 #60 #61
      u= 158 imp:n= 1.0
c     Fuel Assembly in Northwest Quadrant, CC159
   63     2 -9.8114E-01 (( -90 91 -92 93 )
      (#( -90 93 94 -95 96 )))
      u= 159 imp:n= 1.0
      *trcl=( 0.0 0.0 0.0  180 90 90 -90 180 90 90 90 0 )
      fill= 0
c      Fuel Assembly in Northeast Quadrant, CC159
   64 like 63 but fill= 0
      *trcl=( 0 0 0 90 0 90 180 90 90 90 90 0)
      u= 159 imp:n= 1.0
c     Fuel Assembly in Southeast Quadrant, CC159
   65 like 64 but fill= 149
      trcl=( 0 0 0 ) u= 159 imp:n= 1.0
c      Fuel Assembly in Southwest Quadrant, CC159
   66 like 63 but fill= 0
      *trcl=( 0 0 0 -90 180 90 0 -90 90 90 90 0) u= 159 imp:n= 1.0
c     Blade Window, CC159
   67     2 -9.8114E-01 ( 97 -98 99 -100 ):( 101 -102 103 -104)
      u= 159 imp:n= 1.0
c     Guide Tube Segment, CC159
   68     1 -7.9000E+00 -105 106 u= 159 imp:n= 1.0
c     Inside Guide Tube Segment, CC159
   69     0 -106 u= 159 imp:n= 1.0
c     Balance of Control Cell, CC159
   70 2 -9.8114E-01 #63 #64 #65 #66 #67 #68 #69
      u= 159 imp:n= 1.0
c     Fuel Assembly in Northwest Quadrant, CC160
   71     2 -9.8114E-01 (( -90 91 -92 93 )
      (#( -90 93 94 -95 96 )))
      u= 160 imp:n= 1.0
      *trcl=( 0.0 0.0 0.0  180 90 90 -90 180 90 90 90 0 )
      fill= 147
c      Fuel Assembly in Northeast Quadrant, CC160
   72 like 71 but fill= 149
      *trcl=( 0 0 0 90 0 90 180 90 90 90 90 0)
      u= 160 imp:n= 1.0
c     Fuel Assembly in Southeast Quadrant, CC160
   73 like 72 but fill= 148
      trcl=( 0 0 0 ) u= 160 imp:n= 1.0
c      Fuel Assembly in Southwest Quadrant, CC160
   74 like 71 but fill= 149
      *trcl=( 0 0 0 -90 180 90 0 -90 90 90 90 0) u= 160 imp:n= 1.0
c     Blade Window, CC160
   75     2 -9.8114E-01 ( 97 -98 99 -100 ):( 101 -102 103 -104)
      u= 160 imp:n= 1.0
      fill= 3 trcl=( 0.0 0.0 -3.6576E+02 )
c     Guide Tube Segment, CC160
   76     1 -7.9000E+00 -105 106 u= 160 imp:n= 1.0
c     Inside Guide Tube Segment, CC160
   77     0 -106 u= 160 imp:n= 1.0
c     Guide Tube Segment (2), CC160
   78     1 -7.9000E+00 -105 106
      trcl=( 0.0 3.0480E+01 0.0) u= 160 imp:n= 1.0
c     Inside Guide Tube Segment (2), CC160
   79     0 -106       trcl=( 0.0 3.0480E+01 0.0) u= 160 imp:n= 1.0
c     Balance of Control Cell, CC160
   80 2 -9.8114E-01 #71 #72 #73 #74 #75 #76 #77 #78 #79
      u= 160 imp:n= 1.0
c     Fuel Assembly in Northwest Quadrant, CC161
```

```
 81     2 -9.8114E-01 (( -90 91 -92 93 )
      (#( -90 93 94 -95 96 )))
      u= 161 imp:n= 1.0
      *trcl=( 0.0 0.0 0.0  180 90 90 -90 180 90 90 90 0 )
      fill= 148
c      Fuel Assembly in Northeast Quadrant, CC161
 82 like 81 but fill= 150
      *trcl=( 0 0 0 90 0 90 180 90 90 90 90 0)
      u= 161 imp:n= 1.0
c     Fuel Assembly in Southeast Quadrant, CC161
 83 like 82 but fill= 148
      trcl=( 0 0 0 ) u= 161 imp:n= 1.0
c      Fuel Assembly in Southwest Quadrant, CC161
 84 like 81 but fill= 150
      *trcl=( 0 0 0 -90 180 90 0 -90 90 90 90 0) u= 161 imp:n= 1.0
c     Blade Window, CC161
 85     2 -9.8114E-01 ( 97 -98 99 -100 ):( 101 -102 103 -104)
      u= 161 imp:n= 1.0
      fill= 3 trcl=( 0.0 0.0 0.0000E+00 )
c     Guide Tube Segment, CC161
 86     1 -7.9000E+00 -105 106
      trcl=( -3.0480E+01 0.0 0.0) u= 161 imp:n= 1.0
c     Inside Guide Tube Segment, CC161
 87     0 -106      trcl=( -3.0480E+01 0.0 0.0) u= 161 imp:n= 1.0
c     Guide Tube Segment (2), CC161
 88     1 -7.9000E+00 -105 106
      trcl=( -3.0480E+01 3.0480E+01 0.0) u= 161 imp:n= 1.0
c     Inside Guide Tube Segment (2), CC161
 89     0 -106      trcl=( -3.0480E+01 3.0480E+01 0.0) u= 161 imp:n= 1.0
c     Balance of Control Cell, CC161
 90 2 -9.8114E-01 #81 #82 #83 #84 #85 #86 #87 #88 #89
      u= 161 imp:n= 1.0
c     Fuel Assembly in Northwest Quadrant, CC162
 91     2 -9.8114E-01 (( -90 91 -92 93 )
      (#( -90 93 94 -95 96 )))
      u= 162 imp:n= 1.0
      *trcl=( 0.0 0.0 0.0  180 90 90 -90 180 90 90 90 0 )
      fill= 148
c      Fuel Assembly in Northeast Quadrant, CC162
 92 like 91 but fill= 150
      *trcl=( 0 0 0 90 0 90 180 90 90 90 90 0)
      u= 162 imp:n= 1.0
c     Fuel Assembly in Southeast Quadrant, CC162
 93 like 92 but fill= 147
      trcl=( 0 0 0 ) u= 162 imp:n= 1.0
c      Fuel Assembly in Southwest Quadrant, CC162
 94 like 91 but fill= 150
      *trcl=( 0 0 0 -90 180 90 0 -90 90 90 90 0) u= 162 imp:n= 1.0
c     Blade Window, CC162
 95     2 -9.8114E-01 ( 97 -98 99 -100 ):( 101 -102 103 -104)
      u= 162 imp:n= 1.0
      fill= 3 trcl=( 0.0 0.0 -3.6576E+02 )
c     Guide Tube Segment, CC162
 96     1 -7.9000E+00 -105 106 u= 162 imp:n= 1.0
c     Inside Guide Tube Segment, CC162
 97     0 -106 u= 162 imp:n= 1.0
c     Balance of Control Cell, CC162
 98 2 -9.8114E-01 #91 #92 #93 #94 #95 #96 #97
      u= 162 imp:n= 1.0
c     Fuel Assembly in Northwest Quadrant, CC163
 99     2 -9.8114E-01 (( -90 91 -92 93 )
      (#( -90 93 94 -95 96 )))
      u= 163 imp:n= 1.0
      *trcl=( 0.0 0.0 0.0  180 90 90 -90 180 90 90 90 0 )
      fill= 148
c      Fuel Assembly in Northeast Quadrant, CC163
100 like 99 but fill= 150
      *trcl=( 0 0 0 90 0 90 180 90 90 90 90 0)
      u= 163 imp:n= 1.0
c     Fuel Assembly in Southeast Quadrant, CC163
```

```
  101 like 100 but fill= 148
      trcl=( 0 0 0 ) u= 163 imp:n= 1.0
c      Fuel Assembly in Southwest Quadrant, CC163
  102 like 99 but fill= 150
      *trcl=( 0 0 0 -90 180 90 0 -90 90 90 90 0) u= 163 imp:n= 1.0
c     Blade Window, CC163
  103     2 -9.8114E-01 ( 97 -98 99 -100 ):( 101 -102 103 -104)
      u= 163 imp:n= 1.0
      fill= 3 trcl=( 0.0 0.0 0.0000E+00 )
c     Guide Tube Segment, CC163
  104     1 -7.9000E+00 -105 106
      trcl=( -3.0480E+01 0.0 0.0) u= 163 imp:n= 1.0
c     Inside Guide Tube Segment, CC163
  105     0 -106       trcl=( -3.0480E+01 0.0 0.0) u= 163 imp:n= 1.0
c     Balance of Control Cell, CC163
  106 2 -9.8114E-01 #99 #100 #101 #102 #103 #104 #105
      u= 163 imp:n= 1.0
c     Fuel Assembly in Northwest Quadrant, CC164
  107     2 -9.8114E-01 (( -90 91 -92 93 )
      (#( -90 93 94 -95 96 )))
      u= 164 imp:n= 1.0
      *trcl=( 0.0 0.0 0.0  180 90 90 -90 180 90 90 90 0 )
      fill= 148
c      Fuel Assembly in Northeast Quadrant, CC164
  108 like 107 but fill= 0
      *trcl=( 0 0 0 90 0 90 180 90 90 90 90 0)
      u= 164 imp:n= 1.0
c     Fuel Assembly in Southeast Quadrant, CC164
  109 like 108 but fill= 0
      trcl=( 0 0 0 ) u= 164 imp:n= 1.0
c      Fuel Assembly in Southwest Quadrant, CC164
  110 like 107 but fill= 150
      *trcl=( 0 0 0 -90 180 90 0 -90 90 90 90 0) u= 164 imp:n= 1.0
c     Blade Window, CC164
  111     2 -9.8114E-01 ( 97 -98 99 -100 ):( 101 -102 103 -104)
      u= 164 imp:n= 1.0
      fill= 3 trcl=( 0.0 0.0 -3.6576E+02 )
c     Balance of Control Cell, CC164
  112 2 -9.8114E-01 #107 #108 #109 #110 #111
      u= 164 imp:n= 1.0
c     Fuel Assembly in Northwest Quadrant, CC165
  113     2 -9.8114E-01 (( -90 91 -92 93 )
      (#( -90 93 94 -95 96 )))
      u= 165 imp:n= 1.0
      *trcl=( 0.0 0.0 0.0  180 90 90 -90 180 90 90 90 0 )
      fill= 149
c      Fuel Assembly in Northeast Quadrant, CC165
  114 like 113 but fill= 149
      *trcl=( 0 0 0 90 0 90 180 90 90 90 90 0)
      u= 165 imp:n= 1.0
c     Fuel Assembly in Southeast Quadrant, CC165
  115 like 114 but fill= 147
      trcl=( 0 0 0 ) u= 165 imp:n= 1.0
c      Fuel Assembly in Southwest Quadrant, CC165
  116 like 113 but fill= 149
      *trcl=( 0 0 0 -90 180 90 0 -90 90 90 90 0) u= 165 imp:n= 1.0
c     Blade Window, CC165
  117     2 -9.8114E-01 ( 97 -98 99 -100 ):( 101 -102 103 -104)
      u= 165 imp:n= 1.0
      fill= 3 trcl=( 0.0 0.0 0.0000E+00 )
c     Guide Tube Segment, CC165
  118     1 -7.9000E+00 -105 106
      trcl=( 0.0 3.0480E+01 0.0) u= 165 imp:n= 1.0
c     Inside Guide Tube Segment, CC165
  119     0 -106       trcl=( 0.0 3.0480E+01 0.0) u= 165 imp:n= 1.0
c     Balance of Control Cell, CC165
  120 2 -9.8114E-01 #113 #114 #115 #116 #117 #118 #119
      u= 165 imp:n= 1.0
c     Fuel Assembly in Northwest Quadrant, CC166
  121     2 -9.8114E-01 (( -90 91 -92 93 )
```

```
      (#( -90 93 94 -95 96 )))
      u= 166 imp:n= 1.0
      *trcl=( 0.0 0.0 0.0  180 90 90 -90 180 90 90 90 0 )
      fill= 147
c      Fuel Assembly in Northeast Quadrant, CC166
  122 like 121 but fill= 149
      *trcl=( 0 0 0 90 0 90 180 90 90 90 90 0)
      u= 166 imp:n= 1.0
c     Fuel Assembly in Southeast Quadrant, CC166
  123 like 122 but fill= 148
      trcl=( 0 0 0 ) u= 166 imp:n= 1.0
c      Fuel Assembly in Southwest Quadrant, CC166
  124 like 121 but fill= 149
      *trcl=( 0 0 0 -90 180 90 0 -90 90 90 90 0) u= 166 imp:n= 1.0
c     Blade Window, CC166
  125     2 -9.8114E-01 ( 97 -98 99 -100 ):( 101 -102 103 -104)
      u= 166 imp:n= 1.0
      fill= 3 trcl=( 0.0 0.0 0.0000E+00 )
c     Guide Tube Segment, CC166
  126     1 -7.9000E+00 -105 106
      trcl=( -3.0480E+01 3.0480E+01 0.0) u= 166 imp:n= 1.0
c     Inside Guide Tube Segment, CC166
  127     0 -106      trcl=( -3.0480E+01 3.0480E+01 0.0) u= 166 imp:n= 1.0
c     Balance of Control Cell, CC166
  128 2 -9.8114E-01 #121 #122 #123 #124 #125 #126 #127
      u= 166 imp:n= 1.0
c     Fuel Assembly in Northwest Quadrant, CC167
  129     2 -9.8114E-01 (( -90 91 -92 93 )
      (#( -90 93 94 -95 96 )))
      u= 167 imp:n= 1.0
      *trcl=( 0.0 0.0 0.0  180 90 90 -90 180 90 90 90 0 )
      fill= 147
c      Fuel Assembly in Northeast Quadrant, CC167
  130 like 129 but fill= 150
      *trcl=( 0 0 0 90 0 90 180 90 90 90 90 0)
      u= 167 imp:n= 1.0
c     Fuel Assembly in Southeast Quadrant, CC167
  131 like 130 but fill= 148
      trcl=( 0 0 0 ) u= 167 imp:n= 1.0
c      Fuel Assembly in Southwest Quadrant, CC167
  132 like 129 but fill= 150
      *trcl=( 0 0 0 -90 180 90 0 -90 90 90 90 0) u= 167 imp:n= 1.0
c     Blade Window, CC167
  133     2 -9.8114E-01 ( 97 -98 99 -100 ):( 101 -102 103 -104)
      u= 167 imp:n= 1.0
      fill= 3 trcl=( 0.0 0.0 0.0000E+00 )
c     Guide Tube Segment, CC167
  134     1 -7.9000E+00 -105 106 u= 167 imp:n= 1.0
c     Inside Guide Tube Segment, CC167
  135     0 -106 u= 167 imp:n= 1.0
c     Guide Tube Segment (2), CC167
  136     1 -7.9000E+00 -105 106
      trcl=( 0.0 3.0480E+01 0.0) u= 167 imp:n= 1.0
c     Inside Guide Tube Segment (2), CC167
  137     0 -106      trcl=( 0.0 3.0480E+01 0.0) u= 167 imp:n= 1.0
c     Balance of Control Cell, CC167
  138 2 -9.8114E-01 #129 #130 #131 #132 #133 #134 #135 #136 #137
      u= 167 imp:n= 1.0
c     Fuel Assembly in Northwest Quadrant, CC168
  139     2 -9.8114E-01 (( -90 91 -92 93 )
      (#( -90 93 94 -95 96 )))
      u= 168 imp:n= 1.0
      *trcl=( 0.0 0.0 0.0  180 90 90 -90 180 90 90 90 0 )
      fill= 148
c      Fuel Assembly in Northeast Quadrant, CC168
  140 like 139 but fill= 150
      *trcl=( 0 0 0 90 0 90 180 90 90 90 90 0)
      u= 168 imp:n= 1.0
c     Fuel Assembly in Southeast Quadrant, CC168
  141 like 140 but fill= 147
```

```
      trcl=( 0 0 0 ) u= 168 imp:n= 1.0
c      Fuel Assembly in Southwest Quadrant, CC168
  142 like 139 but fill= 150
      *trcl=( 0 0 0 -90 180 90 0 -90 90 90 90 0) u= 168 imp:n= 1.0
c     Blade Window, CC168
  143     2 -9.8114E-01 ( 97 -98 99 -100 ):( 101 -102 103 -104)
      u= 168 imp:n= 1.0
      fill= 3 trcl=( 0.0 0.0 0.0000E+00 )
c     Guide Tube Segment, CC168
  144     1 -7.9000E+00 -105 106
      trcl=( 0.0 3.0480E+01 0.0) u= 168 imp:n= 1.0
c     Inside Guide Tube Segment, CC168
  145     0 -106       trcl=( 0.0 3.0480E+01 0.0) u= 168 imp:n= 1.0
c     Balance of Control Cell, CC168
  146 2 -9.8114E-01 #139 #140 #141 #142 #143 #144 #145
      u= 168 imp:n= 1.0
c     Fuel Assembly in Northwest Quadrant, CC169
  147     2 -9.8114E-01 (( -90 91 -92 93 )
      (#( -90 93 94 -95 96 )))
      u= 169 imp:n= 1.0
      *trcl=( 0.0 0.0 0.0  180 90 90 -90 180 90 90 90 0 )
      fill= 148
c      Fuel Assembly in Northeast Quadrant, CC169
  148 like 147 but fill= 150
      *trcl=( 0 0 0 90 0 90 180 90 90 90 90 0)
      u= 169 imp:n= 1.0
c     Fuel Assembly in Southeast Quadrant, CC169
  149 like 148 but fill= 147
      trcl=( 0 0 0 ) u= 169 imp:n= 1.0
c      Fuel Assembly in Southwest Quadrant, CC169
  150 like 147 but fill= 149
      *trcl=( 0 0 0 -90 180 90 0 -90 90 90 90 0) u= 169 imp:n= 1.0
c     Blade Window, CC169
  151     2 -9.8114E-01 ( 97 -98 99 -100 ):( 101 -102 103 -104)
      u= 169 imp:n= 1.0
      fill= 3 trcl=( 0.0 0.0 0.0000E+00 )
c     Guide Tube Segment, CC169
  152     1 -7.9000E+00 -105 106
      trcl=( -3.0480E+01 3.0480E+01 0.0) u= 169 imp:n= 1.0
c     Inside Guide Tube Segment, CC169
  153     0 -106       trcl=( -3.0480E+01 3.0480E+01 0.0) u= 169 imp:n= 1.0
c     Balance of Control Cell, CC169
  154 2 -9.8114E-01 #147 #148 #149 #150 #151 #152 #153
      u= 169 imp:n= 1.0
c     Fuel Assembly in Northwest Quadrant, CC170
  155     2 -9.8114E-01 (( -90 91 -92 93 )
      (#( -90 93 94 -95 96 )))
      u= 170 imp:n= 1.0
      *trcl=( 0.0 0.0 0.0  180 90 90 -90 180 90 90 90 0 )
      fill= 148
c      Fuel Assembly in Northeast Quadrant, CC170
  156 like 155 but fill= 0
      *trcl=( 0 0 0 90 0 90 180 90 90 90 90 0)
      u= 170 imp:n= 1.0
c     Fuel Assembly in Southeast Quadrant, CC170
  157 like 156 but fill= 0
      trcl=( 0 0 0 ) u= 170 imp:n= 1.0
c      Fuel Assembly in Southwest Quadrant, CC170
  158 like 155 but fill= 149
      *trcl=( 0 0 0 -90 180 90 0 -90 90 90 90 0) u= 170 imp:n= 1.0
c     Blade Window, CC170
  159     2 -9.8114E-01 ( 97 -98 99 -100 ):( 101 -102 103 -104)
      u= 170 imp:n= 1.0
      fill= 3 trcl=( 0.0 0.0 0.0000E+00 )
c     Balance of Control Cell, CC170
  160 2 -9.8114E-01 #155 #156 #157 #158 #159
      u= 170 imp:n= 1.0
c     Fuel Assembly in Northwest Quadrant, CC171
  161     2 -9.8114E-01 (( -90 91 -92 93 )
      (#( -90 93 94 -95 96 )))
```

```
      u= 171 imp:n= 1.0
      *trcl=( 0.0 0.0 0.0  180 90 90 -90 180 90 90 90 0 )
      fill= 148
c      Fuel Assembly in Northeast Quadrant, CC171
  162 like 161 but fill= 150
      *trcl=( 0 0 0 90 0 90 180 90 90 90 90 0)
      u= 171 imp:n= 1.0
c     Fuel Assembly in Southeast Quadrant, CC171
  163 like 162 but fill= 148
      trcl=( 0 0 0 ) u= 171 imp:n= 1.0
c      Fuel Assembly in Southwest Quadrant, CC171
  164 like 161 but fill= 150
      *trcl=( 0 0 0 -90 180 90 0 -90 90 90 90 0) u= 171 imp:n= 1.0
c     Blade Window, CC171
  165     2 -9.8114E-01 ( 97 -98 99 -100 ):( 101 -102 103 -104)
      u= 171 imp:n= 1.0
      fill= 3 trcl=( 0.0 0.0 -3.6576E+02 )
c     Guide Tube Segment, CC171
  166     1 -7.9000E+00 -105 106 u= 171 imp:n= 1.0
c     Inside Guide Tube Segment, CC171
  167     0 -106 u= 171 imp:n= 1.0
c     Guide Tube Segment (2), CC171
  168     1 -7.9000E+00 -105 106
      trcl=( 0.0 3.0480E+01 0.0) u= 171 imp:n= 1.0
c     Inside Guide Tube Segment (2), CC171
  169     0 -106      trcl=( 0.0 3.0480E+01 0.0) u= 171 imp:n= 1.0
c     Balance of Control Cell, CC171
  170 2 -9.8114E-01 #161 #162 #163 #164 #165 #166 #167 #168 #169
      u= 171 imp:n= 1.0
c     Fuel Assembly in Northwest Quadrant, CC172
  171     2 -9.8114E-01 (( -90 91 -92 93 )
      (#( -90 93 94 -95 96 )))
      u= 172 imp:n= 1.0
      *trcl=( 0.0 0.0 0.0  180 90 90 -90 180 90 90 90 0 )
      fill= 148
c      Fuel Assembly in Northeast Quadrant, CC172
  172 like 171 but fill= 150
      *trcl=( 0 0 0 90 0 90 180 90 90 90 90 0)
      u= 172 imp:n= 1.0
c     Fuel Assembly in Southeast Quadrant, CC172
  173 like 172 but fill= 147
      trcl=( 0 0 0 ) u= 172 imp:n= 1.0
c      Fuel Assembly in Southwest Quadrant, CC172
  174 like 171 but fill= 150
      *trcl=( 0 0 0 -90 180 90 0 -90 90 90 90 0) u= 172 imp:n= 1.0
c     Blade Window, CC172
  175     2 -9.8114E-01 ( 97 -98 99 -100 ):( 101 -102 103 -104)
      u= 172 imp:n= 1.0
      fill= 3 trcl=( 0.0 0.0 0.0000E+00 )
c     Guide Tube Segment, CC172
  176     1 -7.9000E+00 -105 106
      trcl=( -3.0480E+01 0.0 0.0) u= 172 imp:n= 1.0
c     Inside Guide Tube Segment, CC172
  177     0 -106      trcl=( -3.0480E+01 0.0 0.0) u= 172 imp:n= 1.0
c     Guide Tube Segment (2), CC172
  178     1 -7.9000E+00 -105 106
      trcl=( -3.0480E+01 3.0480E+01 0.0) u= 172 imp:n= 1.0
c     Inside Guide Tube Segment (2), CC172
  179     0 -106      trcl=( -3.0480E+01 3.0480E+01 0.0) u= 172 imp:n= 1.0
c     Balance of Control Cell, CC172
  180 2 -9.8114E-01 #171 #172 #173 #174 #175 #176 #177 #178 #179
      u= 172 imp:n= 1.0
c     Fuel Assembly in Northwest Quadrant, CC173
  181     2 -9.8114E-01 (( -90 91 -92 93 )
      (#( -90 93 94 -95 96 )))
      u= 173 imp:n= 1.0
      *trcl=( 0.0 0.0 0.0  180 90 90 -90 180 90 90 90 0 )
      fill= 147
c      Fuel Assembly in Northeast Quadrant, CC173
  182 like 181 but fill= 149
```

```
      *trcl=( 0 0 0 90 0 90 180 90 90 90 90 0)
      u= 173 imp:n= 1.0
c     Fuel Assembly in Southeast Quadrant, CC173
  183 like 182 but fill= 147
      trcl=( 0 0 0 ) u= 173 imp:n= 1.0
c      Fuel Assembly in Southwest Quadrant, CC173
  184 like 181 but fill= 149
      *trcl=( 0 0 0 -90 180 90 0 -90 90 90 90 0) u= 173 imp:n= 1.0
c     Blade Window, CC173
  185     2 -9.8114E-01 ( 97 -98 99 -100 ):( 101 -102 103 -104)
      u= 173 imp:n= 1.0
      fill= 3 trcl=( 0.0 0.0 -3.6576E+02 )
c     Guide Tube Segment, CC173
  186     1 -7.9000E+00 -105 106 u= 173 imp:n= 1.0
c     Inside Guide Tube Segment, CC173
  187     0 -106 u= 173 imp:n= 1.0
c     Balance of Control Cell, CC173
  188 2 -9.8114E-01 #181 #182 #183 #184 #185 #186 #187
      u= 173 imp:n= 1.0
c     Fuel Assembly in Northwest Quadrant, CC174
  189     2 -9.8114E-01 (( -90 91 -92 93 )
      (#( -90 93 94 -95 96 )))
      u= 174 imp:n= 1.0
      *trcl=( 0.0 0.0 0.0  180 90 90 -90 180 90 90 90 0 )
      fill= 147
c      Fuel Assembly in Northeast Quadrant, CC174
  190 like 189 but fill= 149
      *trcl=( 0 0 0 90 0 90 180 90 90 90 90 0)
      u= 174 imp:n= 1.0
c     Fuel Assembly in Southeast Quadrant, CC174
  191 like 190 but fill= 147
      trcl=( 0 0 0 ) u= 174 imp:n= 1.0
c      Fuel Assembly in Southwest Quadrant, CC174
  192 like 189 but fill= 149
      *trcl=( 0 0 0 -90 180 90 0 -90 90 90 90 0) u= 174 imp:n= 1.0
c     Blade Window, CC174
  193     2 -9.8114E-01 ( 97 -98 99 -100 ):( 101 -102 103 -104)
      u= 174 imp:n= 1.0
      fill= 3 trcl=( 0.0 0.0 0.0000E+00 )
c     Guide Tube Segment, CC174
  194     1 -7.9000E+00 -105 106
      trcl=( -3.0480E+01 0.0 0.0) u= 174 imp:n= 1.0
c     Inside Guide Tube Segment, CC174
  195     0 -106      trcl=( -3.0480E+01 0.0 0.0) u= 174 imp:n= 1.0
c     Balance of Control Cell, CC174
  196 2 -9.8114E-01 #189 #190 #191 #192 #193 #194 #195
      u= 174 imp:n= 1.0
c     Fuel Assembly in Northwest Quadrant, CC175
  197     2 -9.8114E-01 (( -90 91 -92 93 )
      (#( -90 93 94 -95 96 )))
      u= 175 imp:n= 1.0
      *trcl=( 0.0 0.0 0.0  180 90 90 -90 180 90 90 90 0 )
      fill= 147
c      Fuel Assembly in Northeast Quadrant, CC175
  198 like 197 but fill= 0
      *trcl=( 0 0 0 90 0 90 180 90 90 90 90 0)
      u= 175 imp:n= 1.0
c     Fuel Assembly in Southeast Quadrant, CC175
  199 like 198 but fill= 0
      trcl=( 0 0 0 ) u= 175 imp:n= 1.0
c      Fuel Assembly in Southwest Quadrant, CC175
  200 like 197 but fill= 149
      *trcl=( 0 0 0 -90 180 90 0 -90 90 90 90 0) u= 175 imp:n= 1.0
c     Blade Window, CC175
  201     2 -9.8114E-01 ( 97 -98 99 -100 ):( 101 -102 103 -104)
      u= 175 imp:n= 1.0
      fill= 3 trcl=( 0.0 0.0 -3.6576E+02 )
c     Balance of Control Cell, CC175
  202 2 -9.8114E-01 #197 #198 #199 #200 #201
      u= 175 imp:n= 1.0
```

```
c     Fuel Assembly in Northwest Quadrant, CC176
  203     2 -9.8114E-01 (( -90 91 -92 93 )
      (#( -90 93 94 -95 96 )))
      u= 176 imp:n= 1.0
      *trcl=( 0.0 0.0 0.0  180 90 90 -90 180 90 90 90 0 )
      fill= 149
c      Fuel Assembly in Northeast Quadrant, CC176
  204 like 203 but fill= 149
      *trcl=( 0 0 0 90 0 90 180 90 90 90 90 0)
      u= 176 imp:n= 1.0
c     Fuel Assembly in Southeast Quadrant, CC176
  205 like 204 but fill= 147
      trcl=( 0 0 0 ) u= 176 imp:n= 1.0
c      Fuel Assembly in Southwest Quadrant, CC176
  206 like 203 but fill= 149
      *trcl=( 0 0 0 -90 180 90 0 -90 90 90 90 0) u= 176 imp:n= 1.0
c     Blade Window, CC176
  207     2 -9.8114E-01 ( 97 -98 99 -100 ):( 101 -102 103 -104)
      u= 176 imp:n= 1.0
      fill= 3 trcl=( 0.0 0.0 0.0000E+00 )
c     Balance of Control Cell, CC176
  208 2 -9.8114E-01 #203 #204 #205 #206 #207
      u= 176 imp:n= 1.0
c     Fuel Assembly in Northwest Quadrant, CC177
  209     2 -9.8114E-01 (( -90 91 -92 93 )
      (#( -90 93 94 -95 96 )))
      u= 177 imp:n= 1.0
      *trcl=( 0.0 0.0 0.0  180 90 90 -90 180 90 90 90 0 )
      fill= 147
c      Fuel Assembly in Northeast Quadrant, CC177
  210 like 209 but fill= 150
      *trcl=( 0 0 0 90 0 90 180 90 90 90 90 0)
      u= 177 imp:n= 1.0
c     Fuel Assembly in Southeast Quadrant, CC177
  211 like 210 but fill= 148
      trcl=( 0 0 0 ) u= 177 imp:n= 1.0
c      Fuel Assembly in Southwest Quadrant, CC177
  212 like 209 but fill= 149
      *trcl=( 0 0 0 -90 180 90 0 -90 90 90 90 0) u= 177 imp:n= 1.0
c     Blade Window, CC177
  213     2 -9.8114E-01 ( 97 -98 99 -100 ):( 101 -102 103 -104)
      u= 177 imp:n= 1.0
      fill= 3 trcl=( 0.0 0.0 0.0000E+00 )
c     Guide Tube Segment, CC177
  214     1 -7.9000E+00 -105 106
      trcl=( 0.0 3.0480E+01 0.0) u= 177 imp:n= 1.0
c     Inside Guide Tube Segment, CC177
  215     0 -106      trcl=( 0.0 3.0480E+01 0.0) u= 177 imp:n= 1.0
c     Balance of Control Cell, CC177
  216 2 -9.8114E-01 #209 #210 #211 #212 #213 #214 #215
      u= 177 imp:n= 1.0
c     Fuel Assembly in Northwest Quadrant, CC178
  217     2 -9.8114E-01 (( -90 91 -92 93 )
      (#( -90 93 94 -95 96 )))
      u= 178 imp:n= 1.0
      *trcl=( 0.0 0.0 0.0  180 90 90 -90 180 90 90 90 0 )
      fill= 148
c      Fuel Assembly in Northeast Quadrant, CC178
  218 like 217 but fill= 150
      *trcl=( 0 0 0 90 0 90 180 90 90 90 90 0)
      u= 178 imp:n= 1.0
c     Fuel Assembly in Southeast Quadrant, CC178
  219 like 218 but fill= 148
      trcl=( 0 0 0 ) u= 178 imp:n= 1.0
c      Fuel Assembly in Southwest Quadrant, CC178
  220 like 217 but fill= 150
      *trcl=( 0 0 0 -90 180 90 0 -90 90 90 90 0) u= 178 imp:n= 1.0
c     Blade Window, CC178
  221     2 -9.8114E-01 ( 97 -98 99 -100 ):( 101 -102 103 -104)
      u= 178 imp:n= 1.0
```

```
      fill= 3 trcl=( 0.0 0.0 0.0000E+00 )
c     Guide Tube Segment, CC178
  222     1 -7.9000E+00 -105 106
      trcl=( -3.0480E+01 3.0480E+01 0.0) u= 178 imp:n= 1.0
c     Inside Guide Tube Segment, CC178
  223     0 -106       trcl=( -3.0480E+01 3.0480E+01 0.0) u= 178 imp:n= 1.0
c     Balance of Control Cell, CC178
  224 2 -9.8114E-01 #217 #218 #219 #220 #221 #222 #223
      u= 178 imp:n= 1.0
c     Fuel Assembly in Northwest Quadrant, CC179
  225     2 -9.8114E-01 (( -90 91 -92 93 )
      (#( -90 93 94 -95 96 )))
      u= 179 imp:n= 1.0
      *trcl=( 0.0 0.0 0.0  180 90 90 -90 180 90 90 90 0 )
      fill= 147
c      Fuel Assembly in Northeast Quadrant, CC179
  226 like 225 but fill= 149
      *trcl=( 0 0 0 90 0 90 180 90 90 90 90 0)
      u= 179 imp:n= 1.0
c     Fuel Assembly in Southeast Quadrant, CC179
  227 like 226 but fill= 147
      trcl=( 0 0 0 ) u= 179 imp:n= 1.0
c      Fuel Assembly in Southwest Quadrant, CC179
  228 like 225 but fill= 149
      *trcl=( 0 0 0 -90 180 90 0 -90 90 90 90 0) u= 179 imp:n= 1.0
c     Blade Window, CC179
  229     2 -9.8114E-01 ( 97 -98 99 -100 ):( 101 -102 103 -104)
      u= 179 imp:n= 1.0
      fill= 3 trcl=( 0.0 0.0 0.0000E+00 )
c     Guide Tube Segment, CC179
  230     1 -7.9000E+00 -105 106
      trcl=( -3.0480E+01 3.0480E+01 0.0) u= 179 imp:n= 1.0
c     Inside Guide Tube Segment, CC179
  231     0 -106       trcl=( -3.0480E+01 3.0480E+01 0.0) u= 179 imp:n= 1.0
c     Balance of Control Cell, CC179
  232 2 -9.8114E-01 #225 #226 #227 #228 #229 #230 #231
      u= 179 imp:n= 1.0
c     Fuel Assembly in Northwest Quadrant, CC180
  233     2 -9.8114E-01 (( -90 91 -92 93 )
      (#( -90 93 94 -95 96 )))
      u= 180 imp:n= 1.0
      *trcl=( 0.0 0.0 0.0  180 90 90 -90 180 90 90 90 0 )
      fill= 147
c      Fuel Assembly in Northeast Quadrant, CC180
  234 like 233 but fill= 149
      *trcl=( 0 0 0 90 0 90 180 90 90 90 90 0)
      u= 180 imp:n= 1.0
c     Fuel Assembly in Southeast Quadrant, CC180
  235 like 234 but fill= 147
      trcl=( 0 0 0 ) u= 180 imp:n= 1.0
c      Fuel Assembly in Southwest Quadrant, CC180
  236 like 233 but fill= 149
      *trcl=( 0 0 0 -90 180 90 0 -90 90 90 90 0) u= 180 imp:n= 1.0
c     Blade Window, CC180
  237     2 -9.8114E-01 ( 97 -98 99 -100 ):( 101 -102 103 -104)
      u= 180 imp:n= 1.0
      fill= 3 trcl=( 0.0 0.0 0.0000E+00 )
c     Guide Tube Segment, CC180
  238     1 -7.9000E+00 -105 106 u= 180 imp:n= 1.0
c     Inside Guide Tube Segment, CC180
  239     0 -106 u= 180 imp:n= 1.0
c     Guide Tube Segment (2), CC180
  240     1 -7.9000E+00 -105 106
      trcl=( 0.0 3.0480E+01 0.0) u= 180 imp:n= 1.0
c     Inside Guide Tube Segment (2), CC180
  241     0 -106       trcl=( 0.0 3.0480E+01 0.0) u= 180 imp:n= 1.0
c     Balance of Control Cell, CC180
  242 2 -9.8114E-01 #233 #234 #235 #236 #237 #238 #239 #240 #241
      u= 180 imp:n= 1.0
c     Fuel Assembly in Northwest Quadrant, CC181
```

```
 243     2 -9.8114E-01 (( -90 91 -92 93 )
        (#( -90 93 94 -95 96 )))
        u= 181 imp:n= 1.0
        *trcl=( 0.0 0.0 0.0  180 90 90 -90 180 90 90 90 0 )
        fill= 147
c        Fuel Assembly in Northeast Quadrant, CC181
 244 like 243 but fill= 149
        *trcl=( 0 0 0 90 0 90 180 90 90 90 90 0)
        u= 181 imp:n= 1.0
c       Fuel Assembly in Southeast Quadrant, CC181
 245 like 244 but fill= 147
        trcl=( 0 0 0 ) u= 181 imp:n= 1.0
c        Fuel Assembly in Southwest Quadrant, CC181
 246 like 243 but fill= 149
        *trcl=( 0 0 0 -90 180 90 0 -90 90 90 90 0) u= 181 imp:n= 1.0
c       Blade Window, CC181
 247     2 -9.8114E-01 ( 97 -98 99 -100 ):( 101 -102 103 -104)
        u= 181 imp:n= 1.0
        fill= 3 trcl=( 0.0 0.0 0.0000E+00 )
c       Guide Tube Segment, CC181
 248     1 -7.9000E+00 -105 106
        trcl=( -3.0480E+01 0.0 0.0) u= 181 imp:n= 1.0
c       Inside Guide Tube Segment, CC181
 249     0 -106      trcl=( -3.0480E+01 0.0 0.0) u= 181 imp:n= 1.0
c       Guide Tube Segment (2), CC181
 250     1 -7.9000E+00 -105 106
        trcl=( -3.0480E+01 3.0480E+01 0.0) u= 181 imp:n= 1.0
c       Inside Guide Tube Segment (2), CC181
 251     0 -106      trcl=( -3.0480E+01 3.0480E+01 0.0) u= 181 imp:n= 1.0
c       Balance of Control Cell, CC181
 252 2 -9.8114E-01 #243 #244 #245 #246 #247 #248 #249 #250 #251
        u= 181 imp:n= 1.0
c       Fuel Assembly in Northwest Quadrant, CC182
 253     2 -9.8114E-01 (( -90 91 -92 93 )
        (#( -90 93 94 -95 96 )))
        u= 182 imp:n= 1.0
        *trcl=( 0.0 0.0 0.0  180 90 90 -90 180 90 90 90 0 )
        fill= 147
c        Fuel Assembly in Northeast Quadrant, CC182
 254 like 253 but fill= 0
        *trcl=( 0 0 0 90 0 90 180 90 90 90 90 0)
        u= 182 imp:n= 1.0
c       Fuel Assembly in Southeast Quadrant, CC182
 255 like 254 but fill= 0
        trcl=( 0 0 0 ) u= 182 imp:n= 1.0
c        Fuel Assembly in Southwest Quadrant, CC182
 256 like 253 but fill= 149
        *trcl=( 0 0 0 -90 180 90 0 -90 90 90 90 0) u= 182 imp:n= 1.0
c       Blade Window, CC182
 257     2 -9.8114E-01 ( 97 -98 99 -100 ):( 101 -102 103 -104)
        u= 182 imp:n= 1.0
        fill= 3 trcl=( 0.0 0.0 0.0000E+00 )
c       Balance of Control Cell, CC182
 258 2 -9.8114E-01 #253 #254 #255 #256 #257
        u= 182 imp:n= 1.0
c       Fuel Assembly in Northwest Quadrant, CC183
 259     2 -9.8114E-01 (( -90 91 -92 93 )
        (#( -90 93 94 -95 96 )))
        u= 183 imp:n= 1.0
        *trcl=( 0.0 0.0 0.0  180 90 90 -90 180 90 90 90 0 )
        fill= 147
c        Fuel Assembly in Northeast Quadrant, CC183
 260 like 259 but fill= 150
        *trcl=( 0 0 0 90 0 90 180 90 90 90 90 0)
        u= 183 imp:n= 1.0
c       Fuel Assembly in Southeast Quadrant, CC183
 261 like 260 but fill= 148
        trcl=( 0 0 0 ) u= 183 imp:n= 1.0
c        Fuel Assembly in Southwest Quadrant, CC183
 262 like 259 but fill= 149
```

```
      *trcl=( 0 0 0 -90 180 90 0 -90 90 90 90 0) u= 183 imp:n= 1.0
c     Blade Window, CC183
  263     2 -9.8114E-01 ( 97 -98 99 -100 ):( 101 -102 103 -104)
      u= 183 imp:n= 1.0
      fill= 3 trcl=( 0.0 0.0 -3.6576E+02 )
c     Guide Tube Segment, CC183
  264     1 -7.9000E+00 -105 106 u= 183 imp:n= 1.0
c     Inside Guide Tube Segment, CC183
  265     0 -106 u= 183 imp:n= 1.0
c     Balance of Control Cell, CC183
  266 2 -9.8114E-01 #259 #260 #261 #262 #263 #264 #265
      u= 183 imp:n= 1.0
c     Fuel Assembly in Northwest Quadrant, CC184
  267     2 -9.8114E-01 (( -90 91 -92 93 )
      (#( -90 93 94 -95 96 )))
      u= 184 imp:n= 1.0
      *trcl=( 0.0 0.0 0.0  180 90 90 -90 180 90 90 90 0 )
      fill= 148
c      Fuel Assembly in Northeast Quadrant, CC184
  268 like 267 but fill= 149
      *trcl=( 0 0 0 90 0 90 180 90 90 90 90 0)
      u= 184 imp:n= 1.0
c     Fuel Assembly in Southeast Quadrant, CC184
  269 like 268 but fill= 147
      trcl=( 0 0 0 ) u= 184 imp:n= 1.0
c      Fuel Assembly in Southwest Quadrant, CC184
  270 like 267 but fill= 150
      *trcl=( 0 0 0 -90 180 90 0 -90 90 90 90 0) u= 184 imp:n= 1.0
c     Blade Window, CC184
  271     2 -9.8114E-01 ( 97 -98 99 -100 ):( 101 -102 103 -104)
      u= 184 imp:n= 1.0
      fill= 3 trcl=( 0.0 0.0 -3.6576E+02 )
c     Guide Tube Segment, CC184
  272     1 -7.9000E+00 -105 106 u= 184 imp:n= 1.0
c     Inside Guide Tube Segment, CC184
  273     0 -106 u= 184 imp:n= 1.0
c     Balance of Control Cell, CC184
  274 2 -9.8114E-01 #267 #268 #269 #270 #271 #272 #273
      u= 184 imp:n= 1.0
c     Fuel Assembly in Northwest Quadrant, CC185
  275     2 -9.8114E-01 (( -90 91 -92 93 )
      (#( -90 93 94 -95 96 )))
      u= 185 imp:n= 1.0
      *trcl=( 0.0 0.0 0.0  180 90 90 -90 180 90 90 90 0 )
      fill= 147
c      Fuel Assembly in Northeast Quadrant, CC185
  276 like 275 but fill= 149
      *trcl=( 0 0 0 90 0 90 180 90 90 90 90 0)
      u= 185 imp:n= 1.0
c     Fuel Assembly in Southeast Quadrant, CC185
  277 like 276 but fill= 147
      trcl=( 0 0 0 ) u= 185 imp:n= 1.0
c      Fuel Assembly in Southwest Quadrant, CC185
  278 like 275 but fill= 149
      *trcl=( 0 0 0 -90 180 90 0 -90 90 90 90 0) u= 185 imp:n= 1.0
c     Blade Window, CC185
  279     2 -9.8114E-01 ( 97 -98 99 -100 ):( 101 -102 103 -104)
      u= 185 imp:n= 1.0
      fill= 3 trcl=( 0.0 0.0 -3.6576E+02 )
c     Guide Tube Segment, CC185
  280     1 -7.9000E+00 -105 106 u= 185 imp:n= 1.0
c     Inside Guide Tube Segment, CC185
  281     0 -106 u= 185 imp:n= 1.0
c     Guide Tube Segment (2), CC185
  282     1 -7.9000E+00 -105 106
      trcl=( 0.0 3.0480E+01 0.0) u= 185 imp:n= 1.0
c     Inside Guide Tube Segment (2), CC185
  283     0 -106       trcl=( 0.0 3.0480E+01 0.0) u= 185 imp:n= 1.0
c     Balance of Control Cell, CC185
  284 2 -9.8114E-01 #275 #276 #277 #278 #279 #280 #281 #282 #283
```

```
      u= 185 imp:n= 1.0
c     Fuel Assembly in Northwest Quadrant, CC186
  285     2 -9.8114E-01 (( -90 91 -92 93 )
      (#( -90 93 94 -95 96 )))
      u= 186 imp:n= 1.0
      *trcl=( 0.0 0.0 0.0  180 90 90 -90 180 90 90 90 0 )
      fill= 149
c      Fuel Assembly in Northeast Quadrant, CC186
  286 like 285 but fill= 149
      *trcl=( 0 0 0 90 0 90 180 90 90 90 90 0)
      u= 186 imp:n= 1.0
c     Fuel Assembly in Southeast Quadrant, CC186
  287 like 286 but fill= 0
      trcl=( 0 0 0 ) u= 186 imp:n= 1.0
c      Fuel Assembly in Southwest Quadrant, CC186
  288 like 285 but fill= 0
      *trcl=( 0 0 0 -90 180 90 0 -90 90 90 90 0) u= 186 imp:n= 1.0
c     Blade Window, CC186
  289     2 -9.8114E-01 ( 97 -98 99 -100 ):( 101 -102 103 -104)
      u= 186 imp:n= 1.0
      fill= 3 trcl=( 0.0 0.0 0.0000E+00 )
c     Balance of Control Cell, CC186
  290 2 -9.8114E-01 #285 #286 #287 #288 #289
      u= 186 imp:n= 1.0
c     Fuel Assembly in Northwest Quadrant, CC187
  291     2 -9.8114E-01 (( -90 91 -92 93 )
      (#( -90 93 94 -95 96 )))
      u= 187 imp:n= 1.0
      *trcl=( 0.0 0.0 0.0  180 90 90 -90 180 90 90 90 0 )
      fill= 147
c      Fuel Assembly in Northeast Quadrant, CC187
  292 like 291 but fill= 150
      *trcl=( 0 0 0 90 0 90 180 90 90 90 90 0)
      u= 187 imp:n= 1.0
c     Fuel Assembly in Southeast Quadrant, CC187
  293 like 292 but fill= 0
      trcl=( 0 0 0 ) u= 187 imp:n= 1.0
c      Fuel Assembly in Southwest Quadrant, CC187
  294 like 291 but fill= 0
      *trcl=( 0 0 0 -90 180 90 0 -90 90 90 90 0) u= 187 imp:n= 1.0
c     Blade Window, CC187
  295     2 -9.8114E-01 ( 97 -98 99 -100 ):( 101 -102 103 -104)
      u= 187 imp:n= 1.0
      fill= 3 trcl=( 0.0 0.0 0.0000E+00 )
c     Guide Tube Segment, CC187
  296     1 -7.9000E+00 -105 106
      trcl=( 0.0 3.0480E+01 0.0) u= 187 imp:n= 1.0
c     Inside Guide Tube Segment, CC187
  297     0 -106      trcl=( 0.0 3.0480E+01 0.0) u= 187 imp:n= 1.0
c     Balance of Control Cell, CC187
  298 2 -9.8114E-01 #291 #292 #293 #294 #295 #296 #297
      u= 187 imp:n= 1.0
c     Fuel Assembly in Northwest Quadrant, CC188
  299     2 -9.8114E-01 (( -90 91 -92 93 )
      (#( -90 93 94 -95 96 )))
      u= 188 imp:n= 1.0
      *trcl=( 0.0 0.0 0.0  180 90 90 -90 180 90 90 90 0 )
      fill= 148
c      Fuel Assembly in Northeast Quadrant, CC188
  300 like 299 but fill= 150
      *trcl=( 0 0 0 90 0 90 180 90 90 90 90 0)
      u= 188 imp:n= 1.0
c     Fuel Assembly in Southeast Quadrant, CC188
  301 like 300 but fill= 0
      trcl=( 0 0 0 ) u= 188 imp:n= 1.0
c      Fuel Assembly in Southwest Quadrant, CC188
  302 like 299 but fill= 0
      *trcl=( 0 0 0 -90 180 90 0 -90 90 90 90 0) u= 188 imp:n= 1.0
c     Blade Window, CC188
  303     2 -9.8114E-01 ( 97 -98 99 -100 ):( 101 -102 103 -104)
```

```
      u= 188 imp:n= 1.0
      fill= 3 trcl=( 0.0 0.0 0.0000E+00 )
c     Guide Tube Segment, CC188
  304     1 -7.9000E+00 -105 106
      trcl=( -3.0480E+01 3.0480E+01 0.0) u= 188 imp:n= 1.0
c     Inside Guide Tube Segment, CC188
  305     0 -106      trcl=( -3.0480E+01 3.0480E+01 0.0) u= 188 imp:n= 1.0
c     Balance of Control Cell, CC188
  306 2 -9.8114E-01 #299 #300 #301 #302 #303 #304 #305
      u= 188 imp:n= 1.0
c     Fuel Assembly in Northwest Quadrant, CC189
  307     2 -9.8114E-01 (( -90 91 -92 93 )
      (#( -90 93 94 -95 96 )))
      u= 189 imp:n= 1.0
      *trcl=( 0.0 0.0 0.0  180 90 90 -90 180 90 90 90 0 )
      fill= 148
c      Fuel Assembly in Northeast Quadrant, CC189
  308 like 307 but fill= 149
      *trcl=( 0 0 0 90 0 90 180 90 90 90 90 0)
      u= 189 imp:n= 1.0
c     Fuel Assembly in Southeast Quadrant, CC189
  309 like 308 but fill= 0
      trcl=( 0 0 0 ) u= 189 imp:n= 1.0
c      Fuel Assembly in Southwest Quadrant, CC189
  310 like 307 but fill= 0
      *trcl=( 0 0 0 -90 180 90 0 -90 90 90 90 0) u= 189 imp:n= 1.0
c     Blade Window, CC189
  311     2 -9.8114E-01 ( 97 -98 99 -100 ):( 101 -102 103 -104)
      u= 189 imp:n= 1.0
      fill= 3 trcl=( 0.0 0.0 0.0000E+00 )
c     Guide Tube Segment, CC189
  312     1 -7.9000E+00 -105 106
      trcl=( 0.0 3.0480E+01 0.0) u= 189 imp:n= 1.0
c     Inside Guide Tube Segment, CC189
  313     0 -106      trcl=( 0.0 3.0480E+01 0.0) u= 189 imp:n= 1.0
c     Balance of Control Cell, CC189
  314 2 -9.8114E-01 #307 #308 #309 #310 #311 #312 #313
      u= 189 imp:n= 1.0
c     Fuel Assembly in Northwest Quadrant, CC190
  315     2 -9.8114E-01 (( -90 91 -92 93 )
      (#( -90 93 94 -95 96 )))
      u= 190 imp:n= 1.0
      *trcl=( 0.0 0.0 0.0  180 90 90 -90 180 90 90 90 0 )
      fill= 147
c      Fuel Assembly in Northeast Quadrant, CC190
  316 like 315 but fill= 149
      *trcl=( 0 0 0 90 0 90 180 90 90 90 90 0)
      u= 190 imp:n= 1.0
c     Fuel Assembly in Southeast Quadrant, CC190
  317 like 316 but fill= 0
      trcl=( 0 0 0 ) u= 190 imp:n= 1.0
c      Fuel Assembly in Southwest Quadrant, CC190
  318 like 315 but fill= 0
      *trcl=( 0 0 0 -90 180 90 0 -90 90 90 90 0) u= 190 imp:n= 1.0
c     Blade Window, CC190
  319     2 -9.8114E-01 ( 97 -98 99 -100 ):( 101 -102 103 -104)
      u= 190 imp:n= 1.0
      fill= 3 trcl=( 0.0 0.0 0.0000E+00 )
c     Guide Tube Segment, CC190
  320     1 -7.9000E+00 -105 106
      trcl=( -3.0480E+01 3.0480E+01 0.0) u= 190 imp:n= 1.0
c     Inside Guide Tube Segment, CC190
  321     0 -106      trcl=( -3.0480E+01 3.0480E+01 0.0) u= 190 imp:n= 1.0
c     Balance of Control Cell, CC190
  322 2 -9.8114E-01 #315 #316 #317 #318 #319 #320 #321
      u= 190 imp:n= 1.0
c     Fuel Assembly in Northwest Quadrant, CC191
  323     2 -9.8114E-01 (( -90 91 -92 93 )
      (#( -90 93 94 -95 96 )))
      u= 191 imp:n= 1.0
```

```
      *trcl=( 0.0 0.0 0.0  180 90 90 -90 180 90 90 90 0 )
      fill= 147
c      Fuel Assembly in Northeast Quadrant, CC191
  324 like 323 but fill= 149
      *trcl=( 0 0 0 90 0 90 180 90 90 90 90 0)
      u= 191 imp:n= 1.0
c     Fuel Assembly in Southeast Quadrant, CC191
  325 like 324 but fill= 0
      trcl=( 0 0 0 ) u= 191 imp:n= 1.0
c      Fuel Assembly in Southwest Quadrant, CC191
  326 like 323 but fill= 0
      *trcl=( 0 0 0 -90 180 90 0 -90 90 90 90 0) u= 191 imp:n= 1.0
c     Blade Window, CC191
  327     2 -9.8114E-01 ( 97 -98 99 -100 ):( 101 -102 103 -104)
      u= 191 imp:n= 1.0
      fill= 3 trcl=( 0.0 0.0 0.0000E+00 )
c     Guide Tube Segment, CC191
  328     1 -7.9000E+00 -105 106
      trcl=( 0.0 3.0480E+01 0.0) u= 191 imp:n= 1.0
c     Inside Guide Tube Segment, CC191
  329     0 -106      trcl=( 0.0 3.0480E+01 0.0) u= 191 imp:n= 1.0
c     Balance of Control Cell, CC191
  330 2 -9.8114E-01 #323 #324 #325 #326 #327 #328 #329
      u= 191 imp:n= 1.0
c     Fuel Assembly in Northwest Quadrant, CC192
  331     2 -9.8114E-01 (( -90 91 -92 93 )
      (#( -90 93 94 -95 96 )))
      u= 192 imp:n= 1.0
      *trcl=( 0.0 0.0 0.0  180 90 90 -90 180 90 90 90 0 )
      fill= 147
c      Fuel Assembly in Northeast Quadrant, CC192
  332 like 331 but fill= 0
      *trcl=( 0 0 0 90 0 90 180 90 90 90 90 0)
      u= 192 imp:n= 1.0
c     Fuel Assembly in Southeast Quadrant, CC192
  333 like 332 but fill= 0
      trcl=( 0 0 0 ) u= 192 imp:n= 1.0
c      Fuel Assembly in Southwest Quadrant, CC192
  334 like 331 but fill= 0
      *trcl=( 0 0 0 -90 180 90 0 -90 90 90 90 0) u= 192 imp:n= 1.0
c     Blade Window, CC192
  335     2 -9.8114E-01 ( 97 -98 99 -100 ):( 101 -102 103 -104)
      u= 192 imp:n= 1.0
      fill= 3 trcl=( 0.0 0.0 0.0000E+00 )
c     Balance of Control Cell, CC192
  336 2 -9.8114E-01 #331 #332 #333 #334 #335
      u= 192 imp:n= 1.0
c     Active Core
 2620     2 -9.8114E-01 -8 4 -5 -9 12
      fill=235
      imp:n= 1.0
c     Core Lattice
 2621     2 -9.8114E-01 -107 108 109 -110
      lat=1 u=235 imp:n= 1.0
      fill= -8:0 -8:0 0:0
       235 235 235 235 235 235 235 235 235
       235 235 235 235 235 151 152 153 154
       235 235 235 151 155 153 156 157 158
       235 235 159 153 160 161 162 163 164
       235 235 165 166 167 161 168 169 170
       235 151 152 163 171 172 173 174 175
       235 176 177 178 168 179 180 181 182
       235 176 183 163 184 174 185 181 175
       235 186 187 188 189 190 191 190 192

c     Surface Cards
c
c     Surfaces for Problem Domain
c     Top of Problem
    1 pz 4.3300E+02
```

```
c     Bottom of Problem
    2 pz -4.8570E+01
c     Maximum Radial Extent of Problem
    3 cz 3.3433E+02
c     X-Z Plane
   *4 py 0.0
c     Y-Z Plane
   *5 px 0.0
c     Inner Radial Surface of Vessel
    6 cz 3.1877E+02
c     Outer Radial Surface of Core Shroud
    7 cz 2.6305E+02
c     Inner Radial Surface of Core Shroud
    8 cz 2.5797E+02
c     Top of Active Fuel
    9 pz 3.6576E+02
c     Top of Upper Tie Plate Region
   10 pz 3.9900E+02
c     Top of Core Grid Region
   11 pz 4.0300E+02
c     Bottom of Active Fuel
   12 pz 0.0
c     Bottom of Lower Tie Plate Region
   13 pz -1.3490E+01
c     Bottom of Fuel Support/Core Plate Region
   14 pz -1.8570E+01
c     Outer Radius of Absorber
   15 c/z 2.2292E+00 0.0000E+00 1.7550E-01
c     Outer Radius of Absorber Tube
   16 c/z 2.2292E+00 0.0000E+00 2.3900E-01
c     XMAX for Reference Absorber Tube Cell
   17 px 2.4733E+00
c     XMIN for Reference Absorber Tube Cell
   18 px 1.9850E+00
c     YMAX for Reference Absorber Tube Cell
   19 py 2.5400E-01
c     YMIN for Reference Absorber Tube Cell
   20 py -2.5400E-01
c     Tie Rod Surface #6
   21 py 3.2400E-01
c     Tie Rod Surface #7
   22 py -3.2400E-01
c     Tie Rod Surface #4
   23 px -1.9850E+00
c     Top of Absorber Column
   24 pz 3.6512E+02
c     Bottom of Absorber Column
   25 pz 1.9250E+00
c     Tie Rod Surface #3
   26 px -3.2400E-01
c     Tie Rod Surface #2
   27 px 3.2400E-01
c     Tie Rod Surface #5
   28 py -1.9850E+00
c     Tie Rod Surface #8
   29 py 1.9850E+00
c     Ambiguity Surface for Sheath Corner
   30 px 1.1996E+01
c     Inner Surface for Sheath Corner
   31 c/z 1.1996E+01 0.0000E+00 2.5400E-01
c     Outer Surface for Sheath Corner
   32 c/z 1.1996E+01 0.0000E+00 3.2400E-01
c     XMIN for Sheath Interior
   33 px     1.9860
c     YMIN for Sheath Interior
   34 py    -0.2530
c     YMAX for Sheath Interior
   35 py     0.2530
c     XMIN for Blade Window
   36 px 1.9950E+00
```

```
c     XMAX for Blade Window
   37 px 1.2390E+01
c     YMIN for Blade Window
   38 py -6.5800E-01
c     YMAX for Blade Window
   39 py 6.5800E-01
c     Fuel Pellet Outer Surface, #1, L1
   40 c/z 2.2325E+00 -2.2325E+00 6.2000E-01
c     Fuel Cladding Inner Surface, #1, L1
   41 c/z 2.2325E+00 -2.2325E+00 6.3400E-01
c     Fuel Cladding Outer Surface, #1, L1
   42 c/z 2.2325E+00 -2.2325E+00 7.1500E-01
c     XMAX Surface for Fuel Rod Window, L1
   43 px 3.1700E+00
c     XMIN Surface for Fuel Rod Window, L1
   44 px 1.2950E+00
c     YMIN Surface for Fuel Rod Window, L1
   45 py -3.1700E+00
c     YMAX Surface for Fuel Rod Window, L1
   46 py -1.2950E+00
c     Wide Gap, Channel Outside Wall, pX Surface, L1
   47 px 9.5300E-01
c     Wide Gap, Channel Inside Wall, pX Surface, L1
   48 px 1.1530E+00
c     Ambiguity Surface for Channel Corners (Wide Gap), pY, L1
   49 py -2.1730E+00
c     Ambiguity Surface for Channel Corners (Narrow Gap), pY, L1
   50 py -1.3539E+01
c     Wide Gap, Channel Outside Wall, pY Surface, L1
   51 py -9.5300E-01
c     Wide Gap, Channel Inside Wall, pY Surface, L1
   52 py -1.1530E+00
c     Ambiguity Surface for Channel Corners (Wide Gap), pX, L1
   53 px 2.1730E+00
c     Ambiguity Surface for Channel Corners (Narrow Gap), pX, L1
   54 px 1.3539E+01
c     Narrow Gap, Channel Inside Wall, pY Surface, L1
   55 py -1.4559E+01
c     Narrow Gap, Channel Outside Wall, pY Surface, L1
   56 py -1.4759E+01
c     Narrow Gap, Channel Inside Wall, pX Surface, L1
   57 px 1.4559E+01
c     Narrow Gap, Channel Outside Wall, pX Surface, L1
   58 px 1.4759E+01
c     Channel Corner Outer Radius (NW), L1
   59 c/z 2.1730E+00 -2.1730E+00 1.2200E+00
c     Channel Corner Inner Radius (NW), L1
   60 c/z 2.1730E+00 -2.1730E+00 1.0200E+00
c     Channel Corner Outer Radius (NE), L1
   61 c/z 1.3539E+01 -2.1730E+00 1.2200E+00
c     Channel Corner Inner Radius (NE), L1
   62 c/z 1.3539E+01 -2.1730E+00 1.0200E+00
c     Channel Corner Outer Radius (SE), L1
   63 c/z 1.3539E+01 -1.3539E+01 1.2200E+00
c     Channel Corner Inner Radius (SE), L1
   64 c/z 1.3539E+01 -1.3539E+01 1.0200E+00
c     Channel Corner Outer Radius (SW), L1
   65 c/z 2.1730E+00 -1.3539E+01 1.2200E+00
c     Channel Corner Inner Radius (SW), L1
   66 c/z 2.1730E+00 -1.3539E+01 1.0200E+00
c     Top of Node 1
   67 pz 1.5240E+01
c     Top of Node 2
   68 pz 3.0480E+01
c     Top of Node 3
   69 pz 4.5720E+01
c     Top of Node 4
   70 pz 6.0960E+01
c     Top of Node 5
   71 pz 7.6200E+01
```

```
c     Top of Node 6
   72 pz 9.1440E+01
c     Top of Node 7
   73 pz 1.0668E+02
c     Top of Node 8
   74 pz 1.2192E+02
c     Top of Node 9
   75 pz 1.3716E+02
c     Top of Node 10
   76 pz 1.5240E+02
c     Top of Node 11
   77 pz 1.6764E+02
c     Top of Node 12
   78 pz 1.8288E+02
c     Top of Node 13
   79 pz 1.9812E+02
c     Top of Node 14
   80 pz 2.1336E+02
c     Top of Node 15
   81 pz 2.2860E+02
c     Top of Node 16
   82 pz 2.4384E+02
c     Top of Node 17
   83 pz 2.5908E+02
c     Top of Node 18
   84 pz 2.7432E+02
c     Top of Node 19
   85 pz 2.8956E+02
c     Top of Node 20
   86 pz 3.0480E+02
c     Top of Node 21
   87 pz 3.2004E+02
c     Top of Node 22
   88 pz 3.3528E+02
c     Top of Node 23
   89 pz 3.5052E+02
c     Window for Fuel Assembly (max X), CC151
   90 px 1.5140E+01
c     Window for Fuel Assembly (min X), CC151
   91 px 5.0000E-01
c     Window for Fuel Assembly (max Y), CC151
   92 py -5.0000E-01
c     Window for Fuel Assembly (min Y), CC151
   93 py -1.5140E+01
c     Curved Corner in Window for Fuel Assembly, CC151
   94 c/z 1.3091E+01 -1.3091E+01 2.0486E+00
c     Y Ambiguity Surface for Fuel Assembly Window, CC151
   95 py -1.3091E+01
c     X Ambiguity Surface for Fuel Assembly Window, CC151
   96 px 1.3091E+01
c     Surface 1 for Control Blade Window
   97 py -4.0000E-01
c     Surface 2 for Control Blade Window
   98 py 4.0000E-01
c     Surface 3 for Control Blade Window
   99 px -1.2480E+01
c     Surface 4 for Control Blade Window
  100 px 1.2480E+01
c     Surface 5 for Control Blade Window
  101 px -4.0000E-01
c     Surface 6 for Control Blade Window
  102 px 4.0000E-01
c     Surface 7 for Control Blade Window
  103 py -1.2480E+01
c     Surface 8 for Control Blade Window
  104 py 1.2480E+01
c     Outer Surface of Guide Tube
  105 c/z 1.5240E+01 -1.5240E+01 8.9000E-01
c     Inner Surface of Guide Tube
  106 c/z 1.5240E+01 -1.5240E+01 8.1500E-01
```

```
c      Edge of Control Cell (max X)
  107 px 1.5240E+01
c      Edge of Control Cell (min X)
  108 px -1.5240E+01
c      Edge of Control Cell (min Y)
  109 py -1.5240E+01
c      Edge of Control Cell (max Y)
  110 py 1.5240E+01

c      Material Cards
c      SS304
   m1 006000.50c -8.0000E-02 025055.50c -2.0000E+00 015031.50c -4.5000E-02
      016032.50c -3.0000E-02 014000.50c -7.5000E-01 024050.60c -7.9401E-01
      024052.60c -1.5903E+01 024053.60c -1.8379E+00 024054.60c -4.6512E-01
      028058.60c -6.2161E+00 028060.60c -2.4765E+00 028061.60c -1.0943E-01
      028062.60c -3.5427E-01 028064.60c -9.3702E-02 007014.50c -1.0000E-01
      026054.60c -3.8841E+00 026056.60c -6.3175E+01 026057.60c -1.4856E+00
      026058.60c -1.9936E-01
c      Bypass Water
   m2 001001.50c 2.0
      008016.50c 1.0
  mt2 lwtr.01
c      7GUTP1
   m3 001001.50c -7.0530E+00 006000.50c -4.0000E-03 007014.50c -6.0000E-03
      008016.50c -5.6015E+01 014000.50c -4.1000E-02 015031.50c -2.0000E-03
      016032.50c -2.0000E-03 024050.60c -4.5175E-02 024052.60c -9.0481E-01
      024053.60c -1.0457E-01 024054.60c -2.6463E-02 025055.50c -1.1000E-01
      026054.60c -2.1781E-01 026056.60c -3.5427E+00 026057.60c -8.3307E-02
      026058.60c -1.1179E-02 028058.60c -3.4474E-01 028060.60c -1.3735E-01
      028061.60c -6.0688E-03 028062.60c -1.9648E-02 028064.60c -5.1967E-03
      040000.60c -3.0876E+01 050000.35c -4.4000E-01
c      3TG1
   m4 001001.50c -1.0415E+01 006000.50c -6.0000E-03 007014.50c -7.0000E-03
      008016.50c -8.2657E+01 014000.50c -5.2000E-02 015031.50c -3.0000E-03
      016032.50c -2.0000E-03 024050.60c -5.4996E-02 024052.60c -1.1015E+00
      024053.60c -1.2730E-01 024054.60c -3.2216E-02 025055.50c -1.3900E-01
      026054.60c -2.6911E-01 026056.60c -4.3771E+00 026057.60c -1.0293E-01
      026058.60c -1.3813E-02 028058.60c -4.3076E-01 028060.60c -1.7161E-01
      028061.60c -7.5830E-03 028062.60c -2.4550E-02 028064.60c -6.4933E-03
c      7GLTP1
   m5 001001.50c -3.0160E+00 006000.50c -4.4000E-02 007014.50c -5.5000E-02
      008016.50c -2.3957E+01 014000.50c -4.1200E-01 015031.50c -2.5000E-02
      016032.50c -1.6000E-02 024050.60c -4.3725E-01 024052.60c -8.7576E+00
      024053.60c -1.0121E+00 024054.60c -2.5613E-01 025055.50c -1.0990E+00
      026054.60c -2.1366E+00 026056.60c -3.4752E+01 026057.60c -8.1720E-01
      026058.60c -1.0967E-01 028058.60c -3.4205E+00 028060.60c -1.3627E+00
      028061.60c -6.0215E-02 028062.60c -1.9495E-01 028064.60c -5.1562E-02
      040000.60c -1.7754E+01 050000.35c -2.5300E-01
c      3CP1
   m6 001001.50c -3.3430E+00 006000.50c -5.6000E-02 007014.50c -7.0000E-02
      008016.50c -2.6533E+01 014000.50c -5.2600E-01 015031.50c -3.2000E-02
      016032.50c -2.1000E-02 024050.60c -5.5681E-01 024052.60c -1.1152E+01
      024053.60c -1.2888E+00 024054.60c -3.2617E-01 025055.50c -1.4020E+00
      026054.60c -2.7237E+00 026056.60c -4.4301E+01 026057.60c -1.0418E+00
      026058.60c -1.3980E-01 028058.60c -4.3587E+00 028060.60c -1.7365E+00
      028061.60c -7.6729E-02 028062.60c -2.4841E-01 028064.60c -6.5703E-02
c      B4C
   m7 005010.50c -1.4420E+01 005011.56c -6.3840E+01 006000.50c -2.0000E+01
c       Inchannel Water
   m8 001001.50c 2.0
      008016.50c 1.0
  mt8 lwtr.01
c      G7212G003DL1.dat (1)
   m9 092234.50c -1.8000E-04 092235.50c -2.1770E-02 092236.50c -1.0000E-04
      092238.50c -8.5942E-01 008016.50c -1.1853E-01
c      ZIRC2
  m10 008016.50c -1.2000E-01 024050.60c -4.1790E-03 024052.60c -8.3701E-02
      024053.60c -9.6730E-03 024054.60c -2.4480E-03 026054.60c -5.6500E-03
      026056.60c -9.1898E-02 026057.60c -2.1610E-03 026058.60c -2.9000E-04
      028058.60c -3.3600E-02 028060.60c -1.3387E-02 028061.60c -5.9150E-04
```

```
      028062.60c -1.9150E-03 028064.60c -5.0650E-04 050000.35c -1.4000E+00
      040000.60c -9.8230E+01
c     G7212G003DL1.dat (2)
  m11 092234.50c -1.8000E-04 092235.50c -2.1770E-02 092236.50c -1.0000E-04
      092238.50c -8.5942E-01 008016.50c -1.1853E-01
c     G7212G003DL1.dat (3)
  m12 092234.50c -1.8000E-04 092235.50c -2.1770E-02 092236.50c -1.0000E-04
      092238.50c -8.5942E-01 008016.50c -1.1853E-01
c     G7212G003DL1.dat (4)
  m13 092234.50c -1.2000E-04 092235.50c -1.4990E-02 092236.50c -7.0000E-05
      092238.50c -8.6631E-01 008016.50c -1.1852E-01
c     G7212G003DL1.dat (5)
  m14 092234.50c -1.2000E-04 092235.50c -1.4990E-02 092236.50c -7.0000E-05
      092238.50c -8.6631E-01 008016.50c -1.1852E-01
c     G7212G003DL1.dat (6)
  m15 092234.50c -8.0000E-05 092235.50c -1.0580E-02 092236.50c -5.0000E-05
      092238.50c -8.7078E-01 008016.50c -1.1851E-01
c     G7212G003DL1.dat (7)
  m16 092234.50c -1.8000E-04 092235.50c -2.1450E-02 092236.50c -1.0000E-04
      092238.50c -8.4653E-01 008016.50c -1.1873E-01 064152.50c -3.0000E-05
      064154.50c -2.8000E-04 064155.50c -1.9000E-03 064156.50c -2.6400E-03
      064157.50c -2.0300E-03 064158.50c -3.2500E-03 064160.50c -2.8900E-03
c     G7212G003DL1.dat (8)
  m17 092234.50c -1.8000E-04 092235.50c -2.1770E-02 092236.50c -1.0000E-04
      092238.50c -8.5942E-01 008016.50c -1.1853E-01
c     ZIRC4
  m18 008016.50c -1.2000E-01 024050.60c -4.1790E-03 024052.60c -8.3701E-02
      024053.60c -9.6730E-03 024054.60c -2.4480E-03 026054.60c -1.1300E-02
      026056.60c -1.8380E-01 026057.60c -4.3220E-03 026058.60c -5.8000E-04
      050000.35c -1.4000E+00 040000.60c -9.8180E+01
c     G7212G006DL2.dat (1)
  m19 092234.50c -1.8000E-04 092235.50c -2.1770E-02 092236.50c -1.0000E-04
      092238.50c -8.5942E-01 008016.50c -1.1853E-01
c     G7212G006DL2.dat (2)
  m20 092234.50c -1.8000E-04 092235.50c -2.1770E-02 092236.50c -1.0000E-04
      092238.50c -8.5942E-01 008016.50c -1.1853E-01
c     G7212G006DL2.dat (3)
  m21 092234.50c -1.8000E-04 092235.50c -2.1770E-02 092236.50c -1.0000E-04
      092238.50c -8.5942E-01 008016.50c -1.1853E-01
c     G7212G006DL2.dat (4)
  m22 092234.50c -1.2000E-04 092235.50c -1.4990E-02 092236.50c -7.0000E-05
      092238.50c -8.6631E-01 008016.50c -1.1852E-01
c     G7212G006DL2.dat (5)
  m23 092234.50c -1.2000E-04 092235.50c -1.4990E-02 092236.50c -7.0000E-05
      092238.50c -8.6631E-01 008016.50c -1.1852E-01
c     G7212G006DL2.dat (6)
  m24 092234.50c -8.0000E-05 092235.50c -1.0580E-02 092236.50c -5.0000E-05
      092238.50c -8.7078E-01 008016.50c -1.1851E-01
c     G7212G006DL2.dat (7)
  m25 092234.50c -1.8000E-04 092235.50c -2.1120E-02 092236.50c -1.0000E-04
      092238.50c -8.3364E-01 008016.50c -1.1894E-01 064152.50c -5.0000E-05
      064154.50c -5.6000E-04 064155.50c -3.8000E-03 064156.50c -5.2800E-03
      064157.50c -4.0600E-03 064158.50c -6.4900E-03 064160.50c -5.7900E-03
c     G7212G006DL2.dat (8)
  m26 092234.50c -1.8000E-04 092235.50c -2.1770E-02 092236.50c -1.0000E-04
      092238.50c -8.5942E-01 008016.50c -1.1853E-01
c     G7212G007DL3.dat (1)
  m27 092234.50c -1.8000E-04 092235.50c -2.1770E-02 092236.50c -1.0000E-04
      092238.50c -8.5942E-01 008016.50c -1.1853E-01
c     G7212G007DL3.dat (2)
  m28 092234.50c -1.8000E-04 092235.50c -2.1770E-02 092236.50c -1.0000E-04
      092238.50c -8.5942E-01 008016.50c -1.1853E-01
c     G7212G007DL3.dat (3)
  m29 092234.50c -1.8000E-04 092235.50c -2.1770E-02 092236.50c -1.0000E-04
      092238.50c -8.5942E-01 008016.50c -1.1853E-01
c     G7212G007DL3.dat (4)
  m30 092234.50c -1.2000E-04 092235.50c -1.4990E-02 092236.50c -7.0000E-05
      092238.50c -8.6631E-01 008016.50c -1.1852E-01
c     G7212G007DL3.dat (5)
  m31 092234.50c -1.2000E-04 092235.50c -1.4990E-02 092236.50c -7.0000E-05
```

```
      092238.50c -8.6631E-01 008016.50c -1.1852E-01
c     G7212G007DL3.dat (6)
  m32 092234.50c -8.0000E-05 092235.50c -1.0580E-02 092236.50c -5.0000E-05
      092238.50c -8.7078E-01 008016.50c -1.1851E-01
c     G7212G007DL3.dat (7)
  m33 092234.50c -1.8000E-04 092235.50c -2.1120E-02 092236.50c -1.0000E-04
      092238.50c -8.3364E-01 008016.50c -1.1894E-01 064152.50c -5.0000E-05
      064154.50c -5.6000E-04 064155.50c -3.8000E-03 064156.50c -5.2800E-03
      064157.50c -4.0600E-03 064158.50c -6.4900E-03 064160.50c -5.7900E-03
c     G7212G007DL3.dat (8)
  m34 092234.50c -1.8000E-04 092235.50c -2.1660E-02 092236.50c -1.0000E-04
      092238.50c -8.5512E-01 008016.50c -1.1859E-01 064152.50c -1.0000E-05
      064154.50c -9.0000E-05 064155.50c -6.3000E-04 064156.50c -8.8000E-04
      064157.50c -6.8000E-04 064158.50c -1.0800E-03 064160.50c -9.6000E-04
c     G7211G003DL4.dat (1)
  m35 092234.50c -1.8000E-04 092235.50c -2.1770E-02 092236.50c -1.0000E-04
      092238.50c -8.5942E-01 008016.50c -1.1853E-01
c     G7211G003DL4.dat (2)
  m36 092234.50c -1.8000E-04 092235.50c -2.1770E-02 092236.50c -1.0000E-04
      092238.50c -8.5942E-01 008016.50c -1.1853E-01
c     G7211G003DL4.dat (3)
  m37 092234.50c -1.2000E-04 092235.50c -1.4990E-02 092236.50c -7.0000E-05
      092238.50c -8.6631E-01 008016.50c -1.1852E-01
c     G7211G003DL4.dat (4)
  m38 092234.50c -8.0000E-05 092235.50c -1.0580E-02 092236.50c -5.0000E-05
      092238.50c -8.7078E-01 008016.50c -1.1851E-01
c     G7211G003DL4.dat (5)
  m39 092234.50c -1.8000E-04 092235.50c -2.1450E-02 092236.50c -1.0000E-04
      092238.50c -8.4653E-01 008016.50c -1.1873E-01 064152.50c -3.0000E-05
      064154.50c -2.8000E-04 064155.50c -1.9000E-03 064156.50c -2.6400E-03
      064157.50c -2.0300E-03 064158.50c -3.2500E-03 064160.50c -2.8900E-03
c     G7211G003DL4.dat (6)
  m40 092234.50c -1.8000E-04 092235.50c -2.1770E-02 092236.50c -1.0000E-04
      092238.50c -8.5942E-01 008016.50c -1.1853E-01
c     G7211G006DL5.dat (1)
  m41 092234.50c -1.8000E-04 092235.50c -2.1770E-02 092236.50c -1.0000E-04
      092238.50c -8.5942E-01 008016.50c -1.1853E-01
c     G7211G006DL5.dat (2)
  m42 092234.50c -1.8000E-04 092235.50c -2.1770E-02 092236.50c -1.0000E-04
      092238.50c -8.5942E-01 008016.50c -1.1853E-01
c     G7211G006DL5.dat (3)
  m43 092234.50c -1.2000E-04 092235.50c -1.4990E-02 092236.50c -7.0000E-05
      092238.50c -8.6631E-01 008016.50c -1.1852E-01
c     G7211G006DL5.dat (4)
  m44 092234.50c -8.0000E-05 092235.50c -1.0580E-02 092236.50c -5.0000E-05
      092238.50c -8.7078E-01 008016.50c -1.1851E-01
c     G7211G006DL5.dat (5)
  m45 092234.50c -1.8000E-04 092235.50c -2.1120E-02 092236.50c -1.0000E-04
      092238.50c -8.3364E-01 008016.50c -1.1894E-01 064152.50c -5.0000E-05
      064154.50c -5.6000E-04 064155.50c -3.8000E-03 064156.50c -5.2800E-03
      064157.50c -4.0600E-03 064158.50c -6.4900E-03 064160.50c -5.7900E-03
c     G7211G006DL5.dat (6)
  m46 092234.50c -1.8000E-04 092235.50c -2.1770E-02 092236.50c -1.0000E-04
      092238.50c -8.5942E-01 008016.50c -1.1853E-01
c     G7211G007DL6.dat (1)
  m47 092234.50c -1.8000E-04 092235.50c -2.1770E-02 092236.50c -1.0000E-04
      092238.50c -8.5942E-01 008016.50c -1.1853E-01
c     G7211G007DL6.dat (2)
  m48 092234.50c -1.8000E-04 092235.50c -2.1770E-02 092236.50c -1.0000E-04
      092238.50c -8.5942E-01 008016.50c -1.1853E-01
c     G7211G007DL6.dat (3)
  m49 092234.50c -1.2000E-04 092235.50c -1.4990E-02 092236.50c -7.0000E-05
      092238.50c -8.6631E-01 008016.50c -1.1852E-01
c     G7211G007DL6.dat (4)
  m50 092234.50c -8.0000E-05 092235.50c -1.0580E-02 092236.50c -5.0000E-05
      092238.50c -8.7078E-01 008016.50c -1.1851E-01
c     G7211G007DL6.dat (5)
  m51 092234.50c -1.8000E-04 092235.50c -2.1120E-02 092236.50c -1.0000E-04
      092238.50c -8.3364E-01 008016.50c -1.1894E-01 064152.50c -5.0000E-05
      064154.50c -5.6000E-04 064155.50c -3.8000E-03 064156.50c -5.2800E-03
```

```
      064157.50c -4.0600E-03 064158.50c -6.4900E-03 064160.50c -5.7900E-03
c     G7211G007DL6.dat (6)
  m52 092234.50c -1.8000E-04 092235.50c -2.1660E-02 092236.50c -1.0000E-04
      092238.50c -8.5512E-01 008016.50c -1.1859E-01 064152.50c -1.0000E-05
      064154.50c -9.0000E-05 064155.50c -6.3000E-04 064156.50c -8.8000E-04
      064157.50c -6.8000E-04 064158.50c -1.0800E-03 064160.50c -9.6000E-04
c     G7212G003DL7.dat (1)
  m53 092234.50c -1.8000E-04 092235.50c -2.1770E-02 092236.50c -1.0000E-04
      092238.50c -8.5942E-01 008016.50c -1.1853E-01
c     G7212G003DL7.dat (2)
  m54 092234.50c -1.8000E-04 092235.50c -2.1770E-02 092236.50c -1.0000E-04
      092238.50c -8.5942E-01 008016.50c -1.1853E-01
c     G7212G003DL7.dat (3)
  m55 092234.50c -1.8000E-04 092235.50c -2.1770E-02 092236.50c -1.0000E-04
      092238.50c -8.5942E-01 008016.50c -1.1853E-01
c     G7212G003DL7.dat (4)
  m56 092234.50c -1.2000E-04 092235.50c -1.4990E-02 092236.50c -7.0000E-05
      092238.50c -8.6631E-01 008016.50c -1.1852E-01
c     G7212G003DL7.dat (5)
  m57 092234.50c -1.2000E-04 092235.50c -1.4990E-02 092236.50c -7.0000E-05
      092238.50c -8.6631E-01 008016.50c -1.1852E-01
c     G7212G003DL7.dat (6)
  m58 092234.50c -8.0000E-05 092235.50c -1.0580E-02 092236.50c -5.0000E-05
      092238.50c -8.7078E-01 008016.50c -1.1851E-01
c     G7212G003DL7.dat (7)
  m59 092234.50c -1.8000E-04 092235.50c -2.1450E-02 092236.50c -1.0000E-04
      092238.50c -8.4653E-01 008016.50c -1.1873E-01 064152.50c -3.0000E-05
      064154.50c -2.8000E-04 064155.50c -1.9000E-03 064156.50c -2.6400E-03
      064157.50c -2.0300E-03 064158.50c -3.2500E-03 064160.50c -2.8900E-03
c     G7212G006DL8.dat (1)
  m60 092234.50c -1.8000E-04 092235.50c -2.1770E-02 092236.50c -1.0000E-04
      092238.50c -8.5942E-01 008016.50c -1.1853E-01
c     G7212G006DL8.dat (2)
  m61 092234.50c -1.8000E-04 092235.50c -2.1770E-02 092236.50c -1.0000E-04
      092238.50c -8.5942E-01 008016.50c -1.1853E-01
c     G7212G006DL8.dat (3)
  m62 092234.50c -1.8000E-04 092235.50c -2.1770E-02 092236.50c -1.0000E-04
      092238.50c -8.5942E-01 008016.50c -1.1853E-01
c     G7212G006DL8.dat (4)
  m63 092234.50c -1.2000E-04 092235.50c -1.4990E-02 092236.50c -7.0000E-05
      092238.50c -8.6631E-01 008016.50c -1.1852E-01
c     G7212G006DL8.dat (5)
  m64 092234.50c -1.2000E-04 092235.50c -1.4990E-02 092236.50c -7.0000E-05
      092238.50c -8.6631E-01 008016.50c -1.1852E-01
c     G7212G006DL8.dat (6)
  m65 092234.50c -8.0000E-05 092235.50c -1.0580E-02 092236.50c -5.0000E-05
      092238.50c -8.7078E-01 008016.50c -1.1851E-01
c     G7212G006DL8.dat (7)
  m66 092234.50c -1.8000E-04 092235.50c -2.1120E-02 092236.50c -1.0000E-04
      092238.50c -8.3364E-01 008016.50c -1.1894E-01 064152.50c -5.0000E-05
      064154.50c -5.6000E-04 064155.50c -3.8000E-03 064156.50c -5.2800E-03
      064157.50c -4.0600E-03 064158.50c -6.4900E-03 064160.50c -5.7900E-03
c     G7211G003DL9.dat (1)
  m67 092234.50c -1.8000E-04 092235.50c -2.1770E-02 092236.50c -1.0000E-04
      092238.50c -8.5942E-01 008016.50c -1.1853E-01
c     G7211G003DL9.dat (2)
  m68 092234.50c -1.8000E-04 092235.50c -2.1770E-02 092236.50c -1.0000E-04
      092238.50c -8.5942E-01 008016.50c -1.1853E-01
c     G7211G003DL9.dat (3)
  m69 092234.50c -1.2000E-04 092235.50c -1.4990E-02 092236.50c -7.0000E-05
      092238.50c -8.6631E-01 008016.50c -1.1852E-01
c     G7211G003DL9.dat (4)
  m70 092234.50c -8.0000E-05 092235.50c -1.0580E-02 092236.50c -5.0000E-05
      092238.50c -8.7078E-01 008016.50c -1.1851E-01
c     G7211G003DL9.dat (5)
  m71 092234.50c -1.8000E-04 092235.50c -2.1450E-02 092236.50c -1.0000E-04
      092238.50c -8.4653E-01 008016.50c -1.1873E-01 064152.50c -3.0000E-05
      064154.50c -2.8000E-04 064155.50c -1.9000E-03 064156.50c -2.6400E-03
      064157.50c -2.0300E-03 064158.50c -3.2500E-03 064160.50c -2.8900E-03
c     G7212G006DL10.dat (1)
```

```
  m72 092234.50c -1.8000E-04 092235.50c -2.1770E-02 092236.50c -1.0000E-04
      092238.50c -8.5942E-01 008016.50c -1.1853E-01
c     G7212G006DL10.dat (2)
  m73 092234.50c -1.8000E-04 092235.50c -2.1770E-02 092236.50c -1.0000E-04
      092238.50c -8.5942E-01 008016.50c -1.1853E-01
c     G7212G006DL10.dat (3)
  m74 092234.50c -1.8000E-04 092235.50c -2.1770E-02 092236.50c -1.0000E-04
      092238.50c -8.5942E-01 008016.50c -1.1853E-01
c     G7212G006DL10.dat (4)
  m75 092234.50c -1.2000E-04 092235.50c -1.4990E-02 092236.50c -7.0000E-05
      092238.50c -8.6631E-01 008016.50c -1.1852E-01
c     G7212G006DL10.dat (5)
  m76 092234.50c -1.2000E-04 092235.50c -1.4990E-02 092236.50c -7.0000E-05
      092238.50c -8.6631E-01 008016.50c -1.1852E-01
c     G7212G006DL10.dat (6)
  m77 092234.50c -8.0000E-05 092235.50c -1.0580E-02 092236.50c -5.0000E-05
      092238.50c -8.7078E-01 008016.50c -1.1851E-01
c     G7212G006DL10.dat (7)
  m78 092234.50c -1.8000E-04 092235.50c -2.1120E-02 092236.50c -1.0000E-04
      092238.50c -8.3364E-01 008016.50c -1.1894E-01 064152.50c -5.0000E-05
      064154.50c -5.6000E-04 064155.50c -3.8000E-03 064156.50c -5.2800E-03
      064157.50c -4.0600E-03 064158.50c -6.4900E-03 064160.50c -5.7900E-03
c     SG7D1
  m79 001001.50c -9.3090E+00 006000.50c -1.0000E-03 008016.50c -7.3901E+01
      013027.50c -2.4000E-02 014000.50c -8.0000E-03 022000.50c -6.7000E-02
      024050.60c -1.9474E-02 024052.60c -3.9005E-01 024053.60c -4.5076E-02
      024054.60c -1.1408E-02 025055.50c -1.3000E-02 026054.60c -1.5312E-02
      026056.60c -2.4904E-01 026057.60c -5.8563E-03 026058.60c -7.8590E-04
      028058.60c -1.2667E+00 028060.60c -5.0467E-01 028061.60c -2.2300E-02
      028062.60c -7.2196E-02 028064.60c -1.9095E-02 040000.60c -1.3857E+01
      050000.35c -1.9800E-01
 mt79 lwtr.01
c     Control Cards
c
 tmp1 2.9043E-08 956r
kcode  10000 1.000  10   310
print
prdmp 310 5 1 2
 sdef  erg=d1 pos=d2 axs= 0 0 1 rad=d3 ext=d4
  sp1  -3
  si2  L -1.5240E+02 3.0480E+01 1.8288E+02
         -1.2192E+02 3.0480E+01 1.8288E+02
         -9.1440E+01 3.0480E+01 1.8288E+02
         -6.0960E+01 3.0480E+01 1.8288E+02
         -3.0480E+01 3.0480E+01 1.8288E+02
         -1.8288E+02 6.0960E+01 1.8288E+02
         -1.5240E+02 6.0960E+01 1.8288E+02
         -1.2192E+02 6.0960E+01 1.8288E+02
         -9.1440E+01 6.0960E+01 1.8288E+02
         -6.0960E+01 6.0960E+01 1.8288E+02
         -3.0480E+01 6.0960E+01 1.8288E+02
         -1.8288E+02 9.1440E+01 1.8288E+02
         -1.5240E+02 9.1440E+01 1.8288E+02
         -1.2192E+02 9.1440E+01 1.8288E+02
         -9.1440E+01 9.1440E+01 1.8288E+02
         -6.0960E+01 9.1440E+01 1.8288E+02
         -3.0480E+01 9.1440E+01 1.8288E+02
         -2.1336E+02 1.2192E+02 1.8288E+02
         -1.8288E+02 1.2192E+02 1.8288E+02
         -1.5240E+02 1.2192E+02 1.8288E+02
         -1.2192E+02 1.2192E+02 1.8288E+02
         -9.1440E+01 1.2192E+02 1.8288E+02
         -6.0960E+01 1.2192E+02 1.8288E+02
         -3.0480E+01 1.2192E+02 1.8288E+02
         -2.1336E+02 1.5240E+02 1.8288E+02
         -1.8288E+02 1.5240E+02 1.8288E+02
         -1.5240E+02 1.5240E+02 1.8288E+02
         -1.2192E+02 1.5240E+02 1.8288E+02
         -9.1440E+01 1.5240E+02 1.8288E+02
         -6.0960E+01 1.5240E+02 1.8288E+02
```

```
        -3.0480E+01 1.5240E+02 1.8288E+02
        -2.1336E+02 1.8288E+02 1.8288E+02
        -1.8288E+02 1.8288E+02 1.8288E+02
        -1.5240E+02 1.8288E+02 1.8288E+02
        -1.2192E+02 1.8288E+02 1.8288E+02
        -9.1440E+01 1.8288E+02 1.8288E+02
        -6.0960E+01 1.8288E+02 1.8288E+02
        -3.0480E+01 1.8288E+02 1.8288E+02
        -2.1336E+02 2.1336E+02 1.8288E+02
        -1.8288E+02 2.1336E+02 1.8288E+02
        -1.5240E+02 2.1336E+02 1.8288E+02
        -1.2192E+02 2.1336E+02 1.8288E+02
        -9.1440E+01 2.1336E+02 1.8288E+02
        -6.0960E+01 2.1336E+02 1.8288E+02
        -3.0480E+01 2.1336E+02 1.8288E+02
sp2 1 1 1 1 1 1 1 1 1 1
    1 1 1 1 1 1 1 1 1 1
    1 1 1 1 1 1 1 1 1 1
    1 1 1 1 1 1 1 1 1 1
    1 1 1 1 1
si3 3.0470E+01
si4 1.8288E+02
```