Draft Submittal

(Pink Paper)

CATAWBA APRIL 2003 EXAM
50-413 & 50-414/2003-301

MARCH 31 - APRIL 4 &
APRIL 30, 2003

DRAFT COMBINED RO/SRO WRITTEN EXAM

(PART 3 OF 3)

Bank Question: 1000 Answer: C

1 Pt(s) Unit 1 is operating at 100% power. Given the following events and conditions:

- CF REG valves drift close
- Reactor trip occurs on S/G Lo-Lo level
- ES-0.1 ***(Reactor Trip Response)*** has been entered
- CA functions normally
- Steam dumps do not operate
- S/G PORVs do not open in "AUTO"
- S/G pressure in all S/Gs is approximately 1175 psig
- NC system pressure 2345 increasing
- NC PORVs do not operate

Which one of the following procedures should be implemented?

A. FR-H.1 *(Loss Of Secondary Heat Sink)*

B. FR-H.4 ***(Response To Loss Of Normal Steam Release Capabilities)***

C. AP-22 *(Loss of Instrument Air)*

D. AP-29 ***(Loss of Vital or Aux Control Power)***

Distracter Analysis: The loss of VI causes CF REG valves to close, steam dumps to fail to open in auto and NC PORVs to fail closed.

A. Incorrect: CA flow functioned normally
Plausible: S/G Lo-Lo reactor trip occurred

B. Incorrect: S/G pressure is less than 1175 psig
Plausible: steam dumps and S/G PORVs not functioning

C. Correct: spurious component operation is entry condition for AP-22

D. Incorrect: vital or aux control power not lost
Plausible: components are not functioning

Level: SRO Only 10CFR55.43(b)2

KA: APE 065 G2.4.4 (4.0/4.3)

Lesson Plan Objective: APFAM-22 Obj: 4

Source: New

Level of **knowledge: analysis**

References:
1. OP-CN-SS-VI page 20
2. **AP-22 page** 1
3. F-0 **page** 5

	Objective	LPRO	LPSO	PTRQ
1	State the purpose of AP/0/A/5500/22 (Loss of Instrument Air)	X	X	
2	Summarize major actions in AP/0/A/5500/22 (Loss of Instrument Air)	X	X	
3	Given a set of specific plant conditions and AP/0/A/5500/22 (Loss of Instrument Air) use the rules of usage and outstanding PPRBs to identify the correct procedure flowpath.	X	X	
4	Determine if entry into AP/0/A/5500/22 (Loss of Instrument Air) is required using available control room indications.	X	X	
5	Evaluate and execute each step in AP/0/A/5500/22 (Loss of Instrument Air) using available control room indications and controls: • For all steps contained in the ACTION/EXPECTED RESPONSE column • For all steps contained in the RESPONSE NOT OBTAINED column	X	X	
6	Evaluate applicability of all NOTES and CAUTIONS in AP/0/A/5500/22 (toss of Instrument Ais) using available control room indications.	X	X	

Time: 3 hours

c) Aux Feedwater (CA) System Response to a Loss of Instrument Air

With a boss of Instrument Air, the flow control valves for all S/G's will no longer fail open. A Mod has been completed OR both units which added air receiver tanks to the CA Row control valves with enough air that will allow closure of these valves for 60 minutes after a loss of VI. This will also preclude S/G overfill on a SGTR with a loss of AC Power and a subsequent loss of VI.

d) Transient

1) Air will be lost to:

- Main feedwater control
- Steam dump control
- S/G PORVs in AUTO
- NC PORVs and PZR sprays

2) Reactor trip will occur on 'S/G LO LO Level due to CF control valves failed closed.

3) Steam dumps will not operate. S/G PORVs will not open in 'AUTO'. Heat removal will be via S/G safeties.

4) NC system pressure may increase beyond PZR PORV setpoint. N_2 may have to be aligned to PZR PORVs.

2.2 Station Air System (VS)

A. System Purpose (Obj. #13, 14)

1. Supplies ais to miscellaneous tools and equipment throughout the plant.
2. Backup air supply for the Instrument Air system.
3. Interconnections with other systems.

a) Recirculated cooling water (KR) cools the compressor

1) Effluent cooling water temperature controls the KR flow rate

2) Inlet isolation valves closes automatically when the associated compressor is shutdown.

b) Low Pressure Service Water (RL) cools the after coolers

c) Instrument Air (Obj. #8, 17)

1) Backup supply for VI

2) 1VS-78 will automatically open if VI pressure drops to 76 psig.

3) Via two oil removal filters

d) Logic from the Engineered Safety Features Actuation System doses the containment isolation valves upon receiving a Phase A (S_T) containment isolation signal. (VS-54B) (Obj. #17)

A. **Purpose**

- To provide guidance for responding to a loss of instrument air.

B. **Symptoms**

- 1AD-8, A13 "VI COMPRESSOR D TROUBLE" - LIT
- IAD-8, B/3 "VI COMPRESSOR E TROUBLE - LET
- 1AD-8, C13 "VI COMPRESSOR F TROUBLE" - LIT
- 1AD-8, D/3 "VI DRYER E TROUBLE" - LIT
- 1AD-8, E13 "VI DRYER F TROUBLE" - LIT
- 1AD-8, Fi3 "VI DRYER BYPASS VLV OPEN" - LIT
- VI pressure - DECREASING
- 1AD-8, A/7 "VI LO PRESS - LIT
- Plant instrumentation or control - ERRATIC.

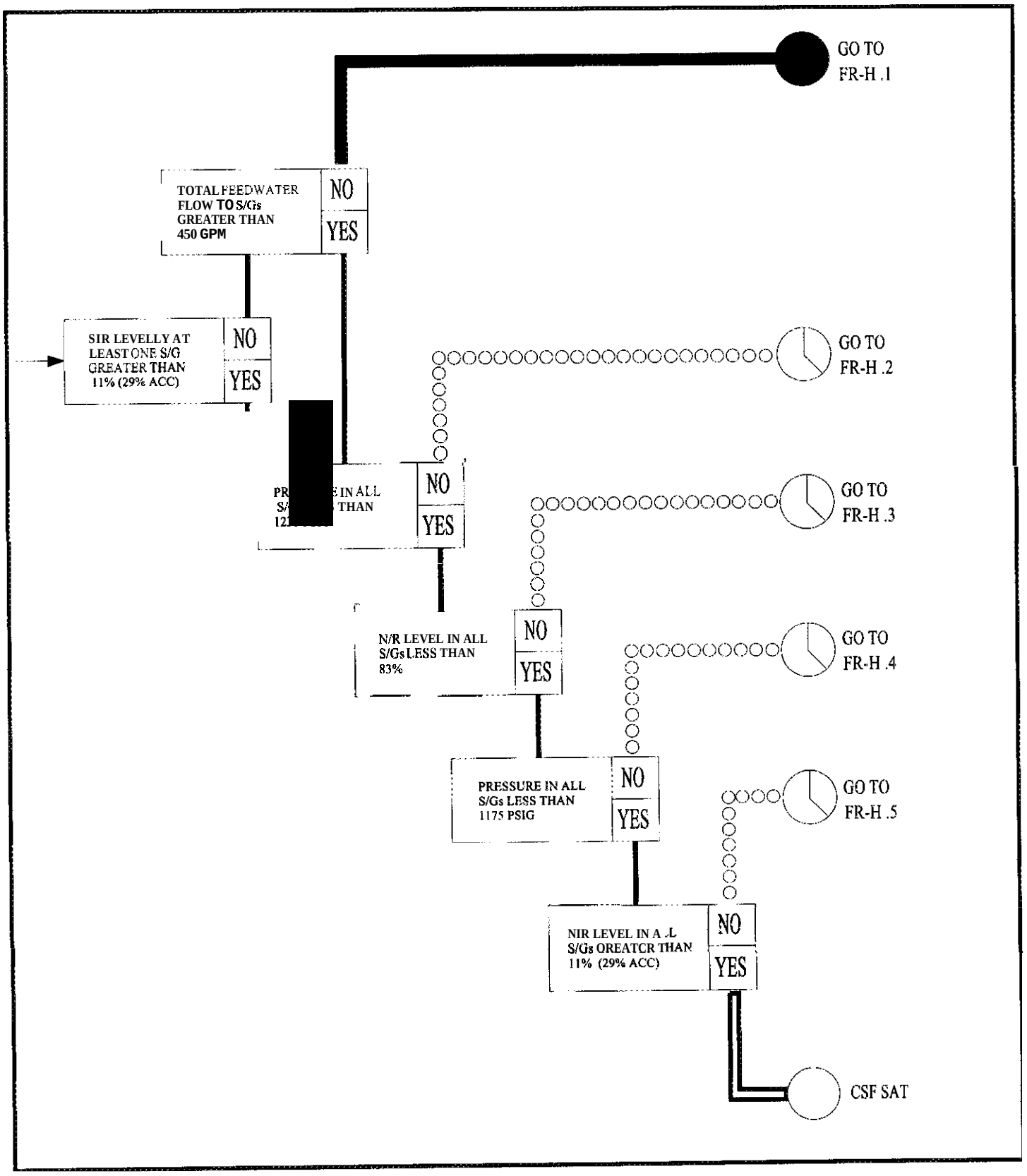
GO TO
FR-H .1
TOTAL FEEDWATER FLOW TO S/Gs GREATER THAN 450 GPM
NO
YES
SIR LEVELLY AT LEAST ONE S/G GREATER THAN 11% (29% ACC)
NO
YES
GO TO
FR-H .2
NO
YES
GO TO
FR-H .3
N/R LEVEL IN ALL S/Gs LESS THAN 83%
NO
YES
GO TO
FR-H .4
PRESSURE IN ALL S/Gs LESS THAN 1175 PSIG
NO
YES
GO TO
FR-H .5
NIR LEVEL IN A .L S/Gs OREATCR THAN 11% (29% ACC)
NO
YES
CSF SAT

Bank Question: 989 **Answer: C**

1 Pt(s)

Unit 1 was operating at 100% power when the foliowing containment floor and equipment sump indications were note$:

Time	Sump A level indication	Sump B level indication
8200	**4.1**	5.9
0215	**4.2**	6.0
0230	**4.3**	**6.1**
0245	**4.4**	6.2
0300	**6.5**	**6.9**

A chemistry sample from the sumps shows the presence of boric acid in the water.

If the OAC is unavailable, which one of the following statements correctly describes the required actions by Tech Specs?

REFERENCES PROVIDED: Tech Spec 3.4.13 and PT/1/A/4600/009

A. Shutdown to mode 3 required no later than 0815

B. Shutdown to mode 3 required no later than 0900

C. Shutdown to mode 3 required no later than 1300

D. Operations may continue indefinitely while conducting containment entry to determine source of Leak and to reduce leakage rate.

Distracter Analysis: The foliowing reflects PT/1/A/4600/009 Encl 13.4 and 13.5 for leak rate determination.

	Sump A		Sump B		
Time	Level	Volume	Level	Volume	Leak rate (gpm)
200	4.1	131.9	5.9	227.6	
215	4.2	137.3	6	232.8	0.7'1
230	4.3	142.6	6.1	238.1	0.91
245	4.4	148	6.2	243.3	0.71
300	6.5	259.1	6.3	280.1	9.86

First – must determine if the leakage at 0300 (9.86 gpm) is considered unidentified leakage or pressure boundary leakage. The proper classification is

unidentified leakage because there is no indication that the leak is corning from a pressure boundary.

A. **Incorrect:** Must be in mode 3 by 1300 per action **A** and B.
Plausible: If the candidate thinks that the leakage is pressure boundary leakage.

B. **Incorrect:** Must be in mode 3 by 1300 per action **A** and B.
Plausible: math error in Ieak rate calculation such as failing to divide leak rate by 15 minutes – or if candidate considers leakage to be pressure boundary leakage.

C. **Correct:** The leakage rate at 0300 *is* 9.8 gpm > 1 gpm unidentified leakage – **Tech** Spec 3.4.13 action **A** and B required – 4+6=10 hours to reach mode **3.**

D. **Incorrect:** Must be in mode **3** by 1300 per action **A** and B.
Plausible: Easy to make a math error such as not dividing by 15 minutes – or if candidate confuses identified leakage spec (10 gpm) with unidentified leakage spec (1 gpm).

Level: SRQ Only 10CFR55.43(b)5

KA: EPE 009 AA2.28 (2.8/3.1)

Lesson Plan Objective: none

Source: New

Level of Knowledge: analysis

References:
1. Tech Spec 3.4.13
2. PT/1/A/4600/009

3.4 REACTOR COOLANT **SYSTEM** (RCS)

3.4.13 RCS Operational LEAKAGE

LCO 3.4.13 RCS operational LEAKAGE shall be limited to:

a. No pressure boundary LEAKAGE;

b. 1 gpm unidentified LEAKAGE.;

c. 10 gpm identified LEAKAGE;

d. 576 gallons per day total primary to secondary LEAKAGE through all steam generators (SGs); and

e. 150 gallons per day primary to secondary LEAKAGE through any one SG.

APPLICABILITY: MODES 1, 2, 3, and 4.

ACTIONS

CONDITION	REQUIRED ACTION	COMPLETION TIME
A. RCS LEAKAGE not within limits for reasons other than pressure boundary LEAKAGE.	A.1 Reduce LEAKAGE to within limits.	4 hours
B. Required Action and associated Completion Time of Condition A not met. OR Pressure boundary LEAKAGE exists.	B.1 Be in MODE 3. AND 8.2 Be in MODE 5.	6 hours 36 hours

SURVEILLANCE REQUIREMENTS

SURVEILLANCE		FREQUENCY
SR 3.4.13.1	----------NOTE---------- Not required to be performed in MODE 3 or 4 until 12 hours of steady state operation. ----------	------NOTE------ Only required to be performed during steady state operation ----------
	Verify RCS Operational LEAKAGE within limits by performance of RCS water inventory balance.	72 hours
SR 3.4.13.2	Verify steam generator tube integrity is in accordance with the Steam Generator Tube Surveillance Program.	In accordance with the Steam Generator Tube Surveillance Program

Duke Power **Company** Catawba Nuclear Station	Procedure No. **PT/1/A/4600/009**
	Revision No. **067**
Loss of Operator Aid Computer	
Continuous Use	**Electronic Reference** No. CN005GA4

PERFORMANCE

* * * * * * * * * UNCONTROLLED FOR PRINT * * * * * * * * * *

(ISSUED) - PDF Format

Loss of Operator Aid Computer

1. Purpose

To document Technical Specifications requirements normally performed by the Operator Aid Computer in the event that the unit Operator Aid Computer is out of service.

2. Reference

2.1 OP/1/A/6700/003 (Operation with the Operator Aid Computer Out of Service)

2.2 Catawba TS and SLC Requirements:

2.2.1 TS3.1.4

2.2.2 TS 3.1.6

2.2.3 TS 3.2.3

2.2.4 TS 3.2.4

2.2.5 TS 3.3.1

2.2.6 TS 3.4.2

2.2.7 TS 3.7.5

2.2.8 TS 3.4.13

2.2.9 TS 3.4.15

2.2.10 SR3.1.4.1

2.2.11 SR 3.1.6.2

2.2.12 SR 3.2.3.1

2.2.13 SR 3.2.4.1

2.2.14 SR3.4.2.1

2.2.15 SLC 16.5-7

2.2.16 TS 3.6.3

2.2.17 TS 3.7.3

3. Time Required

3.1 Manpower - One Operator

3.2 Time - Until the Operator Aid Computer is restored to service.

3.3 Frequency - When the Operator Aid Computer is out of service.

4. Prerequisite Tests

None

5. Test Equipment

None

6. Limits and Precautions

6.1 If an acceptance criteria is **NOT** met, the Operations Shift Manager and the Operator at the Controls should be notified immediately.

6.2 If the unit status or system condition prevents the performance of a surveillance item, the item should be noted on the affected data sheet with an explanation and the Operations Shift Manager and the Operator at the Controls should be notified immediately.

7. Required Unit Status

None

8. Prerequisite System Condition

___ - Verify the Operator Aid Computer is **out of** service.

9. Test Method

A visual inspection of various system instrumentation will be made until the computer **is** returned to service.

10. Data Required

Complete Enclosures as required.

11. Acceptance Criteria

No data taken shall exceed limits listed on the Enclosures.

12. Procedure

12.1 IF in Modes 5 **OR** 6, EVERY 15 MINUTES document the critical core parameters listed on Enclosure 13.1 (Critical Core Parameters Sheet) (Reference OEP).

12.2 IF Start Up Of ND System During Plant Cooldown (OP/1/A/6200/004) is in progress **AND** KCHX Maximized Cooling Temperature Monitoring is being performed, within **15** minutes and every 15 minutes thereafter record parameters on Enclosure 13.2 (KCHX Maximized Cooling Temperature Monitoring).

12.3 EVERY 15 MINUTES record on Enclosure 13.3 (Auxiliary Building Ventilation Supply Unit Status) the status of the Auxiliary Building Ventilation System supply units.

12.4 IF in Modes 1-4, within 30 minutes of Loss of OAC and once per hour thereafter, verify and record on Enclosure 13.4 (Ventilation Unit Condensate Drain Tank Input Rate Determination) that the rate of increase in VUCDT level is < 1% per hour. (TS 3.4.13 and 3.4.15)

12.5 IF in Modes **1-4,** within 30 minutes of Loss of OAC, begin performing Enclosure 13.5 (Containment Floor and Equipment Sumps Input Rate Determination) to verify input to the Containment Floor and Equipment **Sump** is less than 1 gpm. (TS 3.4.13 and 3.4.15)

12.6 IF in Modes 1-4, within 30 minutes of Loss of **OAC and** once per hour thereafter, verify and record on Enclosure 13.6 (1EMF-38 Delta Count Rate Determination) that the change in count rate on 1EMF-38 is < 750 cpm in one hour. (TS 3.4.13 and 3.4.15)

12.7 IF in Modes 1-4, within 30 minutes of Loss of OAC and once per hour thereafter, verify and record on Enclosure 13.4 (1EMF-39 Delta Count Rate Determination) that the change in count rate on 1EMF-39 is < 6700 cpm in one hour. (TS 3.4.13 and 3.4.15)

12.8 IF **ALL** the following conditions exist (Reference SR 3.4.2.1):

- Reactor Critical
- T_{AVG} < 561°F
- T_{REF} - T_{AUCT} - Hi/Lo **Alarm** Present, Annunciator 1AD2 A/4

EVERY 30 MINUTES verify Reactor Coolant loops $T_{AVG} \geq$ 551"F by completing Enclosure 13.8 (T_{AVG} Data Sheet).

NOTE: The ***YC*** Operable But Degraded Condition is normally active during the winter months based on Lake Wylie and SNSWP temperatures.

12.9 **IF** the YC Operable But Degraded Condition is active, perform Enclosure 13.9 (YC Operable But Degraded Temperature Monitoring).

12.10 **IF** both trains of the plasma display monitor are inoperable in Modes 1-6, EVERY 60 MINUTES or after 10% change in power, complete Enclosure 13.10 (Subcooling Data Sheet) to monitor subcooling margin.

12.11 **IF** Unit 1 net generation **CANNOT** be obtained from the Unit 1 operator aid computer, perform the following:

12.11.1 At the top of the first hour during loss of OAC, notify SOC that they will not be getting station or unit **MWH** hourly values from both **CNS** units.
Person notified _____

12.11.2 EVERY HOUR on the HOUR complete Enclosure 13.11 (Electrical Data Sheet).

NOTE:
1. If pressure (primary and secondary) are verified < 200 psig, then temperatures **are NOT** required to be taken nor recorded.
2. Use a calibrated pyrometer to obtain S/G shell temperatures.

12.12 **IF** NC T_C is > 80°F **AND** a NC pump is operating, then the secondary side temperature is > 80°F and documentation of shell temps is **NOT** necessary. **IF** in Modes **5, 6 OR** No Mode, EVERY **60** MINUTES complete Enclosure 13.12 (Steam Generator Data Sheet) (Reference SLC 16.5-7).

12.13 **IF** in Mode 1 **AND less** than 50% rated power, prior to exceeding **50%** rated power and every 1 hour thereafter, with **the** AFD monitor alarm inoperable, monitor and log the indicated Axial Flux Difference for each operable excore channel on Enclosure 13.13 (Axial Flux Difference (%Δ Flux) Following Loss of AFD Monitor Alarm). (Reference SR 3.2.3.1 and TS 3.2.3).

12.14 **IF** in Mode 1 **AND** ≥ 50% rated power, once within 1 hour and every 1 hour thereafter with the AFD monitor alarm inoperable, monitor and log the indicated Axial Flux Difference for each operable excore channel on Enclosure 14.13 (Axial Flux Difference (%A Flux) Following **Loss** of AFD Monitor Alarm). (Reference SR 3.2.3.1 and TS 3.2.3).

12.15 **IF** in Modes 1 **OR** 2, EVERY **4** HOURS verify by signing off on Enclosure 13.14 (Rod Verification Checklist) that the Digital Rod Position indication for all rods are within ± 12 steps of their group step counter demand position and operable (Reference SR 3.1.4.1).

12.16 **IF** in Mode 1 **OR** 2 **AND** $K_{EFF} \geq 1.0$, EVERY 4 HOURS verify and record on Enclosure 13.15 (Rod Insertion Limit Checksheet) that each control bank of rods is above the rod insertion limit (Reference SR 3.1.6.2).

12.17 **IF** in Modes 1,2, 3, **OR** Mode 4, when steam generators are being used for heat removal, EVERY 4 HOURS record CA suction source temperatures measured locally using a calibrated Keithley 872 digital thermometer, Type J or its equivalent, as required, per Enclosure 13.16 (CA Suction Source Temperature Monitoring Data)

12.18 **IF** in Modes 1-4, within 4 HOURS and every 4 hours thereafter, monitor the CF containment isolation valves **N2** accumulator pressures on Enclosure 13.17 (CF Containment Isolation Valve N2 Accumulator Pressure Monitoring).

12.19 **IF** in Modes **1-4,** EVERY 6 HOURS, document data needed for primary to secondary leakage calculation on Enclosure 13.18 (Primary to Secondary Leakage Calculation Data) and provide data **to** Chemistry. Notify Secondary Chemistry to perform PT/1/B/4600/028 (Determination Of Steam Generator Tube Leak Rate For Unit **1).**

12.20 **IF** Auxiliary Spray is being used for pressurizer pressure control, EVERY 12 HOURS complete Enclosure 13.19 (Pressurizer Spray **AT** Data Sheet).

12.21 **IF** in Mode 1 **AND** above 50% rated power, once within 12 hours and every 12 hours thereafter, document Quadrant Power Tilt Ratio, as calculated by PT/0/A/4600/08B (Man. Cal. of Quad. Tilt), in Enclosure 13.1 of PT/1/A/4600/002A (Mode 1 Periodic Surveillance Items). (Reference SR 3.2.4.1)

12.22 **IF** in Modes 1-3, within 12 HOURS of the Loss of OAC and every 12 hours thereafter, monitor the CA piping surface temperatures. Perform OP/1/A/6250/002, Enclosure 4.12 (Checking Pipe Surface Temperatures).

12.23 **IF** in Modes 1-2, within 12 HOURS of the Loss of OAC and every 12 hours thereafter, monitor the Overtemperature Delta T parameters and record on Enclosure 13.20 (Overtemperature Delta T Setpoint Channel Check). (Reference SR 3.3.1.1)

12.24 **IF** in Modes 1-4, EVERY 24 HOURS perform a manual leakage calculation of the NC System in accordance with PT/1/A/4150/001I (NC Manual Leakage Calculation). (Reference *TS* 3.4.15, Required Action **A.**1).

12.25 Update Enclosure 13.21 (Chemistry Data Sheet) as information becomes available from Chemistry.

12.26 **WHEN** the OAC is returned tu service, notify **Shift** Work Manager to coordinate with Local IT and Reactor Group Duty Engineer to ensure OAC is updating properly.

12.26.1 Notify SOC that MWM data should be valid at the top **of** the next hour.
Person notified _____

12.26.2 Give a copy of Enclosure 13.11 to the SSA to assist them in editing the switch board logs.

12.27 Evaluate the acceptance criteria by performing one of the following:

_____ **12.27.1** Verify the acceptance criteria specified in Section 11 is met.

OR

_____ 12.27.2 **IF** the acceptance criteria is **NOT** met, perform the following:

☐ Notify the Unit/WCC SRO that the acceptance criteria is **NOT** met.

_____ _____/_____
Unit/WCC SRO Contacted Date Time

☐ Initiate a PIP to document the test failure.

☐ Document all issues on a procedure discrepancy sheet.

12.28 **IF** any discrepancy is noted during the performance of this test that does **NOT** keep the test from meeting the acceptance criteria, it shall be given to the Unit/WCC SRO for evaluation via a discrepancy sheet.

_____ **12.29** Submit PT/1/A/4600/009 (Loss of Operator Aid Computer) to the Unit/WCC SRO.

13. Enclosures

13.1 Critical Core Parameters Sheet

13.2 KCHX Maximized Cooling Temperature Monitoring

13.3 Auxiliary Building Ventilation Supply Unit Status

13.4 Ventilation Unit Condensate Drain **Tank** Input Rate Determination

13.5 Containment Floor and Equipment Sumps Input Rate Determination

13.6 1EMF-38 Delta Count Rate Determination

13.7 1EMF-39 Delta Count Rate Determination

13.8 T_{AVG} Data Sheet

13.4 YC Operable **But** Degraded Temperature Monitoring

13.10 Subcooling Data Sheet

13.11 Electrical Data Sheet

13.12 Steam Generator Data Sheet

13.13 Axial Flux Difference (%A Flux) Following Loss of AFD Monitor Alarm

13.14 Rod Verification Checklist

13.15 Rod Insertion Limit Checksheet

13.16 CA Suction Source Temperature Monitoring Data

13.14 CF Containment Isolation Valve N2 Accumulator Pressure Monitoring

13.18 Primary to Secondary Leakage Calculation Data

13.19 Pressurizer Spray AT Data Sheet

13.20 Overtemperature Delta T Setpoint Channel Check

13.21 Chemistry Data Sheet

Enclosure 13.1
Critical Core Parameters Sheet

Date	Time	ND Pump 1A Discharge Temp	ND Pump 1B Discharge Temp	NC System Level	PZR Level	Source Range Counts

NOTE: Make additional copies of this sheet as necessary.

Enclosure 13.2

KCHX Maximized Cooling Temperature Monitoring

Date/Time	VCT Outlet Temp 1NVP5510	RN Ess Hdr 1A Temp 1RNP5000	RN Ess Hdr 1B Temp 1RNP5010	KCHX 1A Outlet Piping (See Note)	KCHX 1B Outlet Piping (See Note)

NOTE:

1. When RN Essential Header temperature is ≥ 45°F, KCHX outlet temperature is assumed to be > 45°F. KCHX outlet piping temperature measurements **are** required only when RN Essential header temperature **is** less than 45°F. **A** pyrometer is required to obtain these readings.

2. If any of the following occur, terminate maximized cooling to the KCHXs per (OP/1/A/6200/004)

   - VCT Outlet temperature decreases to 65°F.
   - 1KCHX Outlet piping temperature decreases to 45°F.

Enclosure 13.3

Auxiliary Building Ventilation Supply Unit Status

Date Time/Initials	ABSU-1A		ABSU-1B	
	ON	OFF	ON	OFF

NOTE: If all VA Supply Units are **NOT** on, refer to OP/0/A/6450/011 (Control Room Area Ventilation/Chilled Water System) **for** Control Room D/P verification and OP/0/A/6450/003 (Auxiliary Building Ventilation) for system alignment.

Acceptance Criteria - Rate of increase must be < 1%/hour.

NOTE:

1. Either of the following instruments may be used to perform this surveillance, however, the same instrument should be used for the duration of time the procedure is in effect:
   - "UNIT 1 VUCDT LEVEL" on Auxiliary Waste Processing Control Panel (1ELCC0013) (AB-543, MM, 53-54) .
   - 1WLP5771 (AB-543, BB-CC, 50) CA Pump Room (Next to WCDT)
2. If the rate of increase is ≥ 1%/hour, the VUCDT input rate is > 1 gpm. Refer to TS 3.4.13 and TS 3.4.15 and determine if NC System leakage is > 1 gpm.
3. Coordinate with Radwaste Chemistry as required when the VUCDT needs to be pumped down.

VUCDT INLEAKAGE RATE LOG SHEET			
Gauge Used:			
Time	Level - %	Rate of Change %/Hour	Leakage Acceptable Initial/Date

1. Procedure

NOTE:	**If** any containment floor and equipment sump pump starts during the 10 minute test period the test results will **NOT be** valid. The test should **be** repeated until valid results are obtained. (i.e. no pump start during test period)

_____ 1.1 **Stop** the following sump pumps and place in "Manual":

- "Pump 1A1 Cont Floor & Equip Sump"
- "Pump **1A2** Cont Floor & Equip Sump"
- "Pump 1B1 Cont Floor & Equip Sump"
- "Pump 1B2 Cont Floor & Equip Sump"

NOTE:	The Containment Floor and Equipment Sumps may be pumped down as necessary, however, a new initial sump level reading should be recorded after the pumps are returned to the "Manual" position.

1.2 **IF** at any time during the performance of this test the sump level reaches ≥ 15", **perform** the following:

1.2.1 Place the following sump pumps in "**AUTO**":

- "Pump 1A1 Cont Floor & Equip Sump"
- "Pump 1A2 Cont Floor & Equip Sump"
- "Pump 1B1 Cont Floor & Equip Sump"
- "Pump 1B2 Cont Floor & Equip Sump"

NOTE:	**A** level **less** than 4" is below the calibration range of the Containment Floor and Equipment Sump level instrumentation, therefore the Leakage Detection Systems must **be** declared inoperable at sump level less than 4". {PIP 95-0878}

1.2.2 **Verify the** affected sump level is lowered to 10" as indicated **on** 1WLP5740 (Cont Floor and Equipment Sump **A** Level) or 1WLP5750 (Cont Floor and Equipment Sump B Level).

1.2.3 Return the following sump pumps to "Manual" and stopped

- "Pump 1A1 Cont Floor & Equip Sump"
- "Pump **1A2** Cont Floor & Equip **Sump**"
- "Pump 1B1 Cont Floor & Equip Sump"
- "Pump 1B2 Cont Floor & Equip **Sump**"

_____ 1.3 Record initial sump readings on the "Containment Floor and Equipment Sump Inleakage Rate **Log** Sheet".

1.4 Once per hour, record sump level readings on the "Containment Floor and Equipment Sump Inleakage Rate Log Sheet".

1.5 Calculate the leakage rate using the "Sump Volume vs. Level Indication Table".

1.6 Verify leakage is < 1 gpm.

1.7 **IF** the input to the Containment Floor and Equipment Sumps is > 1 gpm, perform the following:

- Refer to TS 3.4.13 and TS 3.4.15.
- Determine if NC System leakage is > 1 gpm.

_____ **1.8** **WHEN** the OAC **is** returned to service, place the following sump pumps in "AUTO":

- "Pump IA1 Cant Floor & Equip Sump"
- "Pump 1A2 Cont **Fioor** & Equip Sump"
- "Pump 1B1 Cont Floor & Equip Sump"
- "Pump 1B2 Cont Floor & Equip Sump"

Containment Floor and Equipment Sumps
Input Rate Determination

Containment Floor and Equipment Sump Inleakage Rate Log **Sheet**

Date Time/Initials	1WLP5740 CFE Sump A Level – Inches	1WLP5750 CFE Sump B Level - Inches	Leakage Rate gpm	Leakage Acceptable Initial/Date

SUMP VOLUME VS. LEVEL INDICATION TABLE

Level Indication	Water Volume		Level Indication	Water Volume		Level Indication	Water Volume
4.0	126.5		9.0	383.2		14.0	510.3
4.1	131.9		9.1	386.5		14.1	512.5
4.2	137.3		9.2	389.7		14.2	514.8
4.3	142.6		9.3	393.0		14.3	517.0
4.4	148.0		9.4	396.2		14.4	519.3
4.5	153.4		9.5	399.5		14.5	521.5
4.6	158.8		9.6	402.7		14.6	523.7
4.7	164.2		9.7	406.0		14.7	526.0
4.8	169.5		9.8	409.2		14.8	528.2
4.9	174.9		9.9	412.5		14.9	530.5
5.0	180.3		10.0	415.1		15.0	532.7
5.1	185.6		10.1	417.8		15.1	534.9
5.2	190.8		10.2	420.6		15.2	537.2
5.3	196.1		10.3	423.3		15.3	539.4
5.4	201.3		10.4	426.0		15.4	541.7
5.5	206.6		10.5	428.7		15.5	543.9
5.6	211.8		10.6	431.4		15.6	546.1
5.7	217.1		10.7	434.2		15.7	548.4
5.8	222.3		10.8	436.9		15.8	550.6
5.9	227.6		10.9	439.6		15.9	552.9
6.0	232.8		11.0	442.3		16.0	555.1
6.1	238.1		11.1	444.6		16.1	557.4
6.2	243.3		11.2	446.9		16.2	559.6
6.3	248.6		11.3	449.2		16.3	561.8
6.4	253.8		11.4	451.5		16.4	564.1
6.5	259.1		11.5	453.8		16.5	566.3
6.6	264.4		11.6	456.1		16.6	568.6
6.7	269.6		11.7	458.4		16.7	570.8
6.8	274.9		11.8	460.7		16.8	573.1
6.9	280.1		11.9	463.0		16.9	575.3
7.0	285.4		12.0	465.3		17.0	577.6
7.1	290.7		12.1	467.6		17.1	579.8
7.2	296.0		12.2	469.8		17.2	582.0
7.3	301.3		12.3	472.1		17.3	584.3
7.4	306.6		12.4	474.3		17.4	586.5
7.5	311.9		12.5	476.6		17.5	588.8
7.6	317.1		12.6	478.8		17.6	591.0
7.7	322.4		12.7	481.1		17.7	593.3
7.8	327.7		12.8	483.3		17.8	595.5
7.9	333.0		12.9	485.6		17.9	597.8
8.0	338.3		13.0	487.8		18.0	600.0
8.1	342.8		13.1	490.1			
8.2	347.3		13.2	492.3			
8.3	351.8		13.3	494.6			
8.4	356.3		13.4	496.8			
8.5	360.8		13.5	499.1			
8.6	365.2		13.6	501.3			
8.7	369.7		13.7	503.6			
8.8	374.2		13.8	505.8			
8.9	378.7		13.9	508.1			

To calculate the Rate of volume increase in the Sump, perform the following calculation:

$$\frac{(\text{Sump A Gals.}(T2) - \text{Sump A Gals.}(T1)) + (\text{Sump B Gals.}(T2) - \text{Sump B Gals.}(T1))}{(\text{Time at T2} - \text{Time at T1})}$$

NOTE:
1. T1 is the data from the previous reading.
2. T2 is the data from the current reading.

Enclosure 13.6

1EMF-38 Delta Count Rate Determination

EMF38 Count Rate Log Sheet			
Time	Counts/Min	Change in Counts Rate/Hour	Leakage Acceptable Initial/Date

Acceptance Criteria - Change in count rate < *750* cpm per **hour.**

NOTE:

1. If the change in count rate per hour is ≥ 750 cpm, refer to TS 3.4.13 and TS 3.4.15 and determine if NC System leakage is > 1 **gpm.**
2. A digital readout of 1EMF-38 may be obtained from recorder 1MICR6640.

Enclosure 13.7

1EMF-39 Delta Count Rate Determination

EMF39 Count Rate Log Sheet			
Time	Counts/Min	Change in Counts Rate/Hour	Leakage Acceptable Initial/Date

Acceptance Criteria - Change in count rate < 6700 cpm **per** hour.

NOTE: If the change in count rate per hour is ≥ 6700 cpm, refer to TS 3.4.13 and TS 3.4.15 and determine if NC System leakage is > 1 gpm.

Enclosure 13.8

T_{AVG} Data Sheet

ACCEPTANCE CRITERIA: With the Reactor Critical and T_{AVG} < 561°F and T_{REF} - T_{AUCT} Hi/Lo alarm present, verify NC System **loops** T_{AVG} > 551°F. (SR 3.4.2.1)

Loop T_{AVG}

Date	Time	A	B	C	D	Initials

Enclosure 13.8

T_{AVG} Data Sheet

Loop T_{AVG}

Date	Time	A	B	C	D	Initials

YC Operable But Degraded Temperature Monitoring

1. Procedure

_____ 1.1 Record the temperature limits as documented on the NSD **203** Operability Notification Form for the YC Operable But Degraded Condition.

	SNSWP	RN Essential Header
Hi Temperature Limit	_____	_____
Hi-Hi Temperature Limit	_____	_____

1.2 Record the required temperatures on the the "YC Operable But Degraded Temperature Monitoring" data sheet.

1.3 Determine the monitoring frequency as follows:

1.3.1 **IF** any temperature is within **5** °F of either Hi Limit, the temperatures are to be recorded every hour.

1.3.2 **IF** all of the temperatures are > **5** °F below both Hi Limits, the temperatures are to be recorded every four hours.

1.4 **IF** any of the temperatures exceed either Hi Limit determined in step 1.1, contact the YC System Engineer **for** reanalysis of the YC Operable But Degraded Condition.

1.5 **IF** any of the temperatures exceed either Hi-Mi Limit determined in step 1.1, the YC chillers should be considered inoperable unless the YC Operable But Degraded Conditions are reanalyzed.

1.6 Repeat steps 1.2 through **1.5** at the required frequency determined in step 1.3

YC Operable But Degraded Temperature Monitoring					
Time	SNSWP Temp (°F) (0RNP8130) (1)	Unit 1 RN Ess Hdr A Temp (°F) (1RNP5000)	Unit 1 RN Ess Hdr B Temp (°F) (1RNP5010)	Unit 2 RN Ess Hdr A Temp (°F) (2RNP5000)	Unit 2 RN Ess Hdr B Temp (°F) (2RNP5010)

(1) If 0RNP8130 (SNSWP Temp) gauge is inoperable, SNSWP temperature reading may be obtained per PT/0/A/4400/024 (SNSWP Temperature Monitoring).

Enclosure 13.10

Subcooling Data Sheet

CALCULATION SHEET FOR NC SYSTEM DEGREES SUBCOOLED

Date/Time	NC Press	T-SAT	Highest NC Temp	°F Subcooled	Initials

ACCEPTANCE CRITERIA:

Subcool limit is 10°F while at power.
30°F while shutdown.

INFORMATION:

NC Pressure - Record lowest indicated system pressure.

T-SAT - Using NC pressure, determine saturation temperature from the Unit One Revised Data **Book** Figure **57** or Figure ***58.***

Nighest NC **Temp** - Determine the highest NC Temp:

- In Modes I and **2,** use Loop T_{HOT}.
- In Modes 3-6:
  - Compare the average of the **5** highest reading operable core exit T/Cs to Loop T_{HOT}.
    OR
  - Use the operating train(s) of ND inlet temperature, Loop T_{HOT} and/or the operable core exit T/Cs.

°F Subcooled - Calculate by subtracting "HIGHEST NC TEMP" from "F-SAT".

Enclosure 13.11

Electrical Data Sheet

Date/ Time	Gross MWH	1ATE MWH	1T1A MWH	1T2A MWH	1T1B MWH	1T2B MWH	Initials

Enclosure 13.11

Electrical Data Sheet

Date/ Time	DG1A MWH	DG1B MWH	AEB A MWH	U2 CT from U1 MWH	SSF DG MWH NOTE 1	U1 CT from U2 MWH	Initials

NOTE: 1. Obtain SSF KWH from the SSF DG control panel and convert to MWH. If SSF DG has **NOT** been run in the previous hour, use previous hour reading.

Enclosure 13.12

Steam Generator Data Sheet

Date/Time	NC System Press	S/G A		S/G B		S/G C		S/G D		Pyrometer #	Cal Due Date	Initials
		Press	Shell Temp	Press	Shell Temp	Press	Shell Temp	Press	Shell Temp			

ACCEPTANCE CRITERIA: If S/G shell temperature is < 80°F, S/G primary or secondary pressure **must NOT** exceed **200** PSIG.

NOTE: **If** pressure (primary and secondary) are verified < 200 psig, then temperatures are **NOT** required to be taken nor recorded

Enclosure 13.13

Axial Flux Difference (YoA Flux) Following Loss of AFD Monitor Alarm

Date Time/Initials	N-41	N-42	N-43	N-44	POWER LEVEL	(1) LIMITS	

(I) Record the current Axial Flux Difference limit.

ACCEPTANCE CRITERIA - Each channel within the listed limit. Reference the COLR for each channel's limit

Enclosure 13.14

Rod Verification Checklist

ACCEPTANCE CRITERIA - **All rods are** positioned ± 12 steps of their step demand counters and operable.

DATE	TIME	INITIALS

Enclosure 13.15

Rod Insertion Limit Checksheet

BANK A		BANK B		BANK C		BANK D		DATE
INSERTION LIMIT	BANK POSITION	INSERTION LIMIT	BANK POSITION	INSERTION LIMIT	BANK POSITION	INSERTION LIMIT	BANK POSITION	TIME/ INITIALS

ACCEPTANCE CRITERIA - Reactor Operating Data Book, Section 2.2

I. Procedure

1.1 Every 4 hours, record the following temperatures on the table of this enclosure:

- UST 1A at 1CSTT5990 (TB-640, ID-30)
- UST 1B at 1CSTT6000 (TB-640, 1D-29)
- Hotwell Temperture at 1CMTT7260 (TB-577, 15-26)

1.2 Every 4 hours, measure CST temperature at 1CSTX5020 (TB-573, IC-33) by using a Calibrated Kiethly 872 Digital Thermometer, Model "J" or equivalent, and record on the table of this enclosure.

1.3 IF UST temperature is ≥ 134°F,

1.3.1 Notify CRSRO

1.3.2 Verify 1CM-127 (CM-CF Cleanup Flow Ctrl) is:

A. Isolated

OR

B. IF in Modes 3 OR 4 AND 1CM-127 is open, immediately close 1CM-127.

1.3.3 Ensure Aux Steam is isolated to the UST by verifying the following valves closed

- 1AS-15 (AS to UST BTR Isol) (TB 609, 1C-29)
- IAS-22 (AS to 1A UST HTR Ctrl Inlet) (TB-640, 1C-30)
- IAS-25 (AS to 1A UST HTR Ctrl BYP) (TB-640, 1C-30)
- IAS-28 (AS to 1B UST HTR Ctrl Inlet) (TB-640, 1C-29)
- IAS-31 (AS to 1B UST HTR Ctrl BYP) (TB-640, 1C-29)

1.3.4 Verify 1CM-33 (Hotwell High Level Control) (TB-581, 1L-25) is isolated and NOT leaking past seat by checking downstream pipe temperature ≤ 120°F.

1.3.5 Notify MSE.

1.3.6 IF temperature of 1A OR 1B UST is ≥ 136°F, declare CA System inoperable per TS 3.7.5.

1.4 IF CST is ≥ 134 °F

1.4.1 Notify CRSRO

1.4.2 IF UST is overflowing, as determined by UST level ≥ 130%, measure overflow pipe temperature (TB-594, 1C/1D-29) using Calibrated Kiethly 872 Digital Thermometer, Model "J" or equivalent and record on table of this enclosure.

1.4.3 IF overflow pipe temperature ≥ 134 °F, refer to step 1.3.

1.4.4 Verify Manual Loader for Condensate Storage Tank (1ASML0170, CST Temp Ctrl) (TB 573, 1E-32) is set per OP/0/B/6250/007A (Auxiliary Steam System Alignment).

1.4.5 IF Aux Steam Manual Loader for CST is malfunctioning, then:

- Ensure 1AS-16 (AS to CST HTR Ctrl Inlet) (TB-582, 1E-33) is closed.
- Notify MSE.

1.4.6 IF temperature of CST is ≥ 136°F, secure both CST pumps and

A. IF UST is overflowing to the CST as indicated by UST level ≥ 130%, measure temp on UST overflow line (TB-594, 1C/1D-29).

B. IF temp is ≥ 136°F, declare CA System inoperable.

C. IF the UST is NOT overflowing to the CST as indicated by UST level ≤ 130%, measure UST temperature at 1CSTT5990 (TB-640, 1D-30) and 1CSTT6000 (TB-640, ID-29). IF temp is ≥ 136 "F, declare CA system inoperable.

NOTE: Step 1.5 is only applicable if 1CM-33 is open in Modes 2 and 3 and Mode 4 when S/Gs are required for heat removal.

1.5 IF Hotwell pump discharge temperature reaches > 136°F OR Main Condenser Vacuum decreases to <27" Hg vac, immediately close 1CM-33 (Hotwell High Level Control).

NOTE:	1CM-33 is required to be isolated when CA is aligned for Standby Readiness. Refer to OP/1/A/6250/002 (Auxiliary Feedwater System).

1.6 **IF** Hotwell temperature reaches ≥ 134°F, then:

1.6.1 **IF** ICM-33 is isolated, then no further action is required.

1.6.2 **IF** Unit 1 S/Gs are **NOT** relied upon for heat removal, then no further action is required.

1.6.3 **IF** Unit 1 is in modes 1,2,3, **OR** 4 with CA required operable **AND** 1CM-33 *is* NOT isolated, then isolate 1CM-33.

1.7 **IF** Hotwell temperature reaches ≥ 136°F, then:

1.7.1 **IF** 1CM-33 is isolated, then no further action *is* required.

1.7.2 **IF** Unit 1 S/Gs are **NOT** relied upon for heat removal, then no further action is required.

1.7.3 **IF** Unit 1 is in modes 1,2,3, **OR** *4* with CA required operable **AND** 1CM-33 is NOT isolated, then declare auxiliary feedwater system inoperable and apply Tech Spec 3.7.5.

Enclosure 13.16

CA Suction Source Temperature Monitoring Data

Date Time/Initial	1A UST Temp 1CSTT5990 (TB-640,1D-30)	1B UST Temp 1CSTT6000 (TB-640, 1D-29)	Hotwell Temp 1CMTT7260 (TB-577, 1J-26)	CST Temp 1CSTX5020 (TB-573, 1C-33) (2)	UST Overflow Line Temp (TB-594, 1C/1D-29) (3)	Pyrometer # (If required)	Cal Due Date (If required)

(2) If temp is ≥ 136 °F, Step 1.4.6 actions apply.

(3) If temp is ≥ 136 °F, Step 1.3.6 actions apply.

1. Procedure

NOTE:	The CF containment isolation valves N2 accumulator pressures are obtained locally on the pressure transmitter from a digital readout.

1.1 Every 4 hours, monitor the CF isolation valves N2 accumulator pressures on the table of this enclosure for the following:

- 1CF-33 (1A S/G Feedwater Containment Isol), 1CFPT5710, (DH, 597, EE-43)
- 1CF-42 (1B S/G Feedwater Containment Isol), 1CFPT5720, (DH, 597, EE-52)
- 1CF-51 (1C ***S/G*** Feedwater Containment **Isol),** 1CFPT5730, (DH, 596, EE-53)
- 1CF-60 (ID S/G Feedwater Containment **Isol),** 1CFPT5740, (DH, 597, EE-44)

1.2 **IF** N2 pressure is < 1285 psig for any of the CF containment isolation valves, then perform the following:

NOTE:	The CF containment isolation valve is inoperable when N2 pressure is < 1285 psig.

1.2.1 Notify the Control Room SRO **that** the applicable CF containment isolation valve is inoperable per Technical Specifications 3.6.3 and 3.7.3.

1.2.2 Notify the Shift Work Manager

1.2.3 Issue the following Model W/O for the applicable CF containment isolation valve for IAE to recharge the N2 accumulator:

- 1CF-33, Model W/O #91003804
- ICF-42, Model W/O #91003805
- 1CF-51, Model W/O #91003806
- 1CF-60, Model W/O #91003807

1.3 IF N2 pressure is ≥ 1285 psig **AND** < 1625 psig for **any** of the CF containment isolation valve, then perfom the following:

1.3.1 Notify the Control Room SRO.

1.3.2 Notify the Shift **Work** Manager

1.3.3 Issue the following Model W/O for the applicable CF containment isolation valve for IAE to recharge the N2 accumulator:

- 1CF-33, Model W/O #91003804
- 1CF-42, Model W/O #91003805
- 1CF-51, Model W/O #91003806
- 1CF-60, Model W/O #91003807

1.4 IF N2 pressure is > 2425 psig **AND** ≤ 2415 psig, then perfom the following:

- Notify the Control Room SRO.

NOTE: Due to system design limits, there is no immediate concern with catastrophic equipment failure due to overpressurization.

- Dispatch operator to the applicable doghouse to investigate if a local steam *leak* in the area could be the cause of the high pressure.
- Notify the Shift **Work** Manager that the applicable CF N2 accumulator needs to be vented.

1.5 **IF** N2 pressure is > 2445 psig, then perform the following:

NOTE: The CF containment isolation valve is inoperable when N2 pressure is > 2475 psig.

- Notify the Control Room SRO that the applicable CF containment isolation valve is inoperable per Technical Specification 3.6.3 and 3.7.3.

NOTE: Due to system design limits, there is no immediate concern with catastrophic equipment failure due to overpressurization.

- Dispatch operator to the applicable doghouse to investigate if a local steam leak in the area of the applicable CF

- Notify the Shift **Work** Manager that the applicable CF isolation valve N2 accumulator needs to be vented.

CF Containment Isolation Valve N2 Accumulator Pressure Monitoring

NOTE: The **normal** operating range for the CF containment isolation valves N2 accumulator pressure **is** approximately 2200-2300 psig.

Date Time/Initials	1CF-33 (1CFPT5710) (1)(2)	1CF-42 (1CFPT5720) (1)(2)	1CF-51 (1CFPT5730) (1)(2)	1CF-60 (1CFPT5740) (1)(2)

(1) With N2 pressure < **1285** psig, the CF containment isolation valve is inoperable.

(2) With N2 presume > 2475 psig, the CF containment isolation valve is inoperable.

Enclosure 13.18

Primary to Secondary Leakage Calculation Data

Date Time/Initials	CSAE Flowrate (scfm)	EMF33 Countrate	Chemistry Contact

Enclosure 13.19

Pressurizer Spray AT Data Sheet

Date/Time	Pressurizer Steam Temperature	Spray Line Temperature	ΔT	Initial

ACCEPTANCE CRITERIA - Differential temperature between the pressurizer and auxiliary spray water must be < 260°F.

NOTE: When using Residual Heat Removal Pump 1A (ND Pump 1A), use Residual Heat Removal Heat Exchanger "A" Inlet Temperature on 1MC7. When using Residual Heat Removal Pump 1B (ND Pump 1B), use Residual Heat Removal Heat Exchanger "B" Inlet temperature on 1MC7. When **using** Chemical Volume **and** Control System, use Regenerative Heat Exchanger charging temperature on 1MC5.

Overtemperature Delta T Setpoint Channel Check

1. Procedure

1.1 Gauges to be used:
- NC Loop A 1NCP5422
- NC Loop B 1NCP5462
- NC Loop C 1NCP5502
- NC Loop D 1NCP5542

NOTE: At lower power levels (<≈ 85%), the instrumentation will be overranged (> 150%). If the instrumentation is overranged, use a value of 150% when performing the Channel Check.

1.2 Verify that the difference between the highest and lowest reading loop is less than or equal to 10% and record on table below.

1.3 **IF** the difference is > 10%, notify Reactor Group Duty Engineer to perform a qualitative assessment of channels to determine operability.

Date/Time	Highest Channel	Lowest Channel	Differential

Enclosure 13.21

Chemistry Data Sheet

Analysis	CONC		DATE/TIME
NC Boron		PPM	
		PPM	
		PPM	
PZR Boron		PPM	
		PPM	
		PPM	
BAT Boron		PPM	
		PPM	
		PPM	
FWST Boron		PPM	
		PPM	
		PPM	
KF Pool Boron		PPM	
		PPM	
		PPM	
ACCUM A Boron		PPM	
		PPM	
		PPM	
ACCUM B Boron		PPM	
		PPM	
		PPM	
ACCUM C Boron		PPM	
		PPM	
		PPM	
ACCUM D Boron		PPM	
		PPM	
		PPM	
NC Oxygen		PPB	
		PPB	
		PPB	

Analysis	CONC		DATE/TIME
NC **Chloride**		PPB	
		PPB	
		PPB	
NC Fluoride		PPB	
		PPB	
		PPB	
NC Dose Equiv I-131		µCi/ML	
		µCi/ML	
		µCi/ML	
NC Gross Activity		µCi/ML	
		µCi/ML	
		µCi/ML	
NC Activity Max.		µCi/ML	
		µCi/ML	
		µCi/ML	
CF Oxygen		PPB	
		PPB	
		PPB	

Analysis	CONC		DATE/TIME
CF Cation		µMHO	
		µMHO	
		µMHO	
BE Sodium		PPB	
		PPB	
		PPB	
BB Cation		µMHO	
		µMHO	
		µMHO	
CF Gross Activity		µCi/ML	
		µCi/ML	
		µCi/ML	
Boiler A (Conductivity)		µMHO	
		µMHO	
		µMHO	
Boiler A (Solids)		PPB	
		PPB	
		PPB	
Boiler A (Hydrazine)		PPB	
		PPB	
		PPB	
Boiler A (pH)			
Boiler B (Conductivity)		µMHO	
		µMHO	
		µMHO	
Boiler B (Solids)		PPB	
		PPB	
		PPB	

Analysis	CONC		DATE/TIME
Boiler B (Hydrazine)		PPB	
		PPB	
		PPB	
Boiler B (pH)			

Analysis	Status	Date/Time
Seal Inj. Filter 1A		
Seal Inj. Filter 1B		
NC Filter 1A		
NC Filter 1B		
NV Mixed Bed Demin. 1A		
NV Mixed Bed Demin. 1B		
NV Cation Bed Demin.		

Comments:_____

c) Aux Feedwater (CA) System Response to a Loss of Instrument Air

With a Loss of Instrument Air, the flow control valves for all S/G's will no longer fail open. A Mod has been completed on both units which added air receiver tanks to the CA flow control valves with enough air that will allow closure of these valves for 60 minutes after a loss of VI. This will also preclude S/G overfill on a SGTR with a loss of AC Power and a subsequent loss of VI.

d) Transient

1) Air will be lost to:

- Main feedwater control
- Steam dump control
- S/G PORVs in AUTO
- NC PORVs and PZR sprays

2) Reactor trip will occur on 'S/G LO LO bevel due to CF control valves failed closed.

3) Steam dumps will not operate. S/G PORVs will not open in 'AUTO. Heat removal will be via S/G safeties.

4) NC system pressure may increase beyond PZR PORV setpoint. N_2 may have to be aligned to PZR PORVs.

2.2 Station Air System (VS)

A. System Purpose (Obj. #13, 14)

1. Supplies air to miscellaneous tools and equipment throughout the plant.
2. Backup air supply for the Instrument Air system.
3. Interconnections with other systems.

a) Recirculated cooling water (KR) cools the compressor

1) Effluent coding water temperature controls the KR flow rate

2) Inlet isolation valves closes automatically when the associated compressor is shutdown.

b) Low Pressure Service Water (RL) cools the after coolers

c) instrument Air (Obj. #8, 17)

1) Backup supply for VI

2) 1VS-78 will automatically open if VI pressure drops to 76 psig.

3) Via two oil removal filters

d) Logic from the Engineered Safety Features Actuation System closes the containment isolation valves upon receiving a Phase A (S_T) containment isolation signal. (VS-54B) (Obj. #17)

Bank Question: 988 **Answer: B**

1 Pt(s)

Unit 1 was operating at 100% powcr when the pressurizer spray line developed a leak. Which one of the following conditions would cause the safety injection system to be inoperable during *this* accident?

A. **1NI-118A** and **1NI-150B** are open **with power** applied

B. **1NI-162A** is closed with **power** applied

C. **1NI-121A** and **1NI-152B** are closed **with** power removed

D. **1NI-100B** is open with power removed

Distracter Analysis:

A. Incorrect: This *is* a normal alignment for the NI cold leg injection vaives.
Plausible: If the candidate thinks that these valves open on a safety injection signal. These valves tic the two trains of safety injection together so the candidate may think that cross-tying the two coid leg injection paths constitutes a loss of train separation

B. Correct: 1NI-162 is the common isolation line for NI. The proper position would be for the valve to be open with power removed.

C. Incorrect: 1NI-121A and 1NI-152B are the NI hot leg isolation lines – the proper position is closed with power removed **as** listed.
Plausible: If the candidate thinks that **power** should not be disconnected or the hot leg injection path should be open

D. Incorrect: 1NI-100B is the FWST supply isolation line. Normal position is open with power removed **as** listed.
Plausible: If the candidate confuses 1NI-100B with 1NI-103A -- which is a different FWST suppiy isolation valve. 1NI-103A is normally open with power removed.

Level: SRO Only 10CFR55.43(b)5

KA: APE 008 AA2.10 (3.6/3.6)

Lesson Plan Objective: NI Obj: 8, 13

Source: New

Level of knowledge: comprehension

References:

1. OP-CN-ECCS-NI **page** 8
2. Tech **Spec** 3.5.2
3. Tech **Spec Bases** 3.5.2

OBJECTIVES

	Objective	ISS	NLO	LPRO	LPSO	PTRQ
1	State the purpose and explain the operation of the NI System.	X	X	X	X	
2	State the purpose of the safety injection pumps and the FWST.	X	X			
3	Draw a block diagram of the ECCS system from the FWST to the NC System per the lesson plan simplified drawing.	X	X			
4	State how the NI Pumps operate above and below their shutoff head.			X	X	X
5	Given appropriate plant conditions, apply limits and precautions associated with related station procedures.	X	X	X	X	X
6	List the signals that automatically initiate safety injection.			X	X	X
7	Describe the operation and flowpath of the NI System following receipt of a "Ss" signal.	X	X	X	X	X
8	Describe the operation and flowpath of the NI System during cold leg and hot leg recirculation including suction path valve interlocks and blackouts after ECCS is reset.			X	X	X
9	Describe the operation of the ECCS subsystems upon receipt of a "Ss" signal.	X	X	X	X	X
10	Describe the flowpath of the ECCS subsystems during cold leg and hot leg recirculation including suction path valve interlocks.			X	X	X
11	Describe the indications to enter and actions taken for Reactor Trip or SI Actuation during plant shutdown.			X	X	X
12	State from memory all T.S. actions for the applicable systems, subsystems and components, which require remedial action to be taken in less than 1 hour.			X	X	
13	Given a set of specific plant conditions and access to reference materials, determine the actions necessary to comply with Tech Specs/SLCs.			X	X	X
14	State the causes of gas intrusion into the ECCS systems.			X	X	X
15	Describe how CNS minimizes the possibility of gas intrusion into the ECCS systems.			X	X	X

3) This recirculation flow must be isolated during Cold/Hot leg recirculation to prevent putting back the FWST. The exists for removing water from the sump and the FWST, which result in an release via WST vent.

6. The following is the power arrangement for the NI and other ECCS ; all are powered from The sequencer loads are:

a) SA SEQ ND, NV, and NI Pumps

b) Blackout SEQUENCER: NV Pumps

B. The pump Refueling Tank T) is to provide the initial source of borated water to the NI pumps, other ECCS components, and the containment spray pumps. Limited in volume, this tank will eventually be isolated. The continued suction source of the ECCS pumps will be the containment sump

C. NI system motor d valves (1&2-the same)

1. NI-10 FWST Supply open with power removed.

2. NI-13/NI-135 A&B pump's FWST isolation , normally open with power

3. Discharge Isolations

a) Cold leg inj valves, NI-113 and 150B are normally open, tying the two trains of pump discharge together

b) common to the cold legs, is required open with switches disconnected.

c) Globe throttle valves are locked in a position, determined by the ECCS FLOW BALANCE TEST, to ent pump runout and to equalize the flow to the loops.

d) valves 21A arid 1528, are closed with control board switch disconnected until going into Hot leg R

.2 Standby Alignment and procedure Limits and refe to latest copy of (#5)

A. The system is placed in standby when all NC cold legs are greater than 300°F and is less than 5 F

B. Normal Standby

1. An injection exists from the FWST (NI-100B) to the cold (NI-150B A) Valves NI-100B and have disconnect switch used to meet per T.S. surveillance in the position, the breaker control circuit is cut off and the control board switch will not function.

3.5 EMERGENCY CORE CQOLBNG SYSTEMS (ECCS)

3.5.2 ECCS—Operating

LCO 3.5.2 Two ECCS trains shall be OPERABLE*.

APPLICABILITY: MODES 1, 2, and 3.

---NOTE---
In MODE 3, both safety injection (SI) pump flow paths may be isolated by closing the isolation valves for up to 2 hours to perform pressure isolation valve testing per SR 3.4.14.1.

ACTIONS

CONDITION	REQUIRED ACTION	COMPLETION TIME
A. One or mere trains inoperable. AND At least 100% of the ECCS flow equivalent to a single OPERABLE ECCS train available.	A.1 Restore train(s) to OPERABLE status	72 hours*
B. Required Action and associated Completion Time not met.	B.I Be in MODE 3. AND 8.2 Be in MODE 4.	6 hours 12 hours

'For each ECCS train on Unit 2, the Completion Time that one ECCS train can be inoperable as specified by Required Action A.I may be extended beyond th6 72 hours up to 288 hours as part of the NSWS system upgrades. System upgrades include maintenance and modification activities associated with cleaning of NSWS piping. valves and branch lines, necessary repairs andior replacement, valve repair and/or replacement, and replacement of portions of the NSWS piping to the AFW system. Upon completion of the cleaning. upgrades. and system restoration in refueling outage 1 EOC12, this footnote is no longer applicable.

SURVEILLANCE REQUIREMENTS

SURVEILLANCE		FREQUENCY
SR 3.5.2.1	Verify the following valves are in the listed position with power to the valve operator removed. Number / Position / Function NI162A / Open / SI Cold beg Injection NI121A / Closed / SI Hot Leg Injection NI152B / Closed / SI Hot beg Injection NI183B / Closed / RHR Hot Leg Injection NI173A / Open / RHR Cold Leg Injection NI178B / Open / RHR Cold Leg Injection NI100B / Open / SI Pump Suction from RWST NI147B / Open / SI Pump Mini-Flow	12 hours
SR 3.5.2.2	Verify each ECCS manual, power operated, and automatic valve in the flow path, that is not locked, sealed, or otherwise secured in position, is in the correct position.	31 days
SR 3.5.2.3	Verify ECCS piping is full of water.	32 days
SR 3.5.2.4	Verify each ECCS pump's developed head at the test flow point is greater than or equal to the required developed head.	In accordance with the Inservice Testing Program

(continued)

SURVEILLANCE REQUIREMENTS (continued)

SURVEILLANCE		FREQUENCY
SR 3.5.2.5	Verify each ECCS automatic valve in the flow path that is not locked, sealed, or otherwise secured in position, actuates to the correct position on an actual or simulated actuation signal.	18 months
SR 3.5.2.6	Verify each ECCS pump starts automatically on an actual or simulated actuation signal.	18 months
SR 3.5.2.7	Verify, for each ECCS throttle valve listed below, each position stop is in the correct position. Centrifugal Charging Pump Injection Throttle Valve Number: NI14, NI16, NI18, NI20 Safety Injection Pump Throttle Valve Number: NI164, NI166, NI168, NI170	18 months
SR 3.5.2.8	Verify, by visual inspection, each ECCS train containment sump suction inlet is not restricted by debris and the suction inlet trash racks and screens show no evidence of structural distress or abnormal corrosion.	18 months

B 3.5 EMERGENCY CORE COOLING SYSTEMS (ECCS)

B 3.5.2 ECCS—Operating

BASES

BACKGROUND

The function of the ECCS is to provide core cooling and negative reactivity to ensure that the reactor core is protected after any of the following accidents:

a. Loss of coolant accident (LOCA), coolant leakage greater than the capability of the normal charging system;

b. Rod ejection accident;

c. Loss of secondary coolant accident, including uncontrolled steam or feedwater release; and

d. Steam generator tube rupture (SGTR).

The addition of negative reactivity is designed primarily for the loss of secondary coolant accident where primary cooldown could add enough positive reactivity to achieve criticality and return to significant power.

There are three phases of ECCS operation: injection, cold leg recirculation, and hot leg recirculation. In the injection phase, water is taken from the refueling water storage tank (RWST) and injected into the Reactor Coolant System (RCS) through the cold legs. When sufficient water is removed from the RWST to ensure that enough boron has been added to maintain the reactor subcritical and the containment sumps have enough water to supply the required net positive suction head to the ECCS pumps, suction is switched to the containment sump for cold leg recirculation. When the core decay heat has decreased to a level low enough to be successfully removed without direct RHR pump injection flow, the RHR cold leg injection path is realigned to discharge to the auxiliary containment spray header. After approximately 7 hours. part of the ECCS flow is shifted to the hot leg recirculation phase to provide a backflush which. for a cold leg break, would reduce the boiling in the top of the core and prevent excessive boron concentration.

The ECCS consists of three separate subsystems: centrifugal charging (high head), safety injection (Si) (intermediate head), and residual heat removal (RHR) (low head). Each subsystem consists of two redundant, 100% capacity trains. The ECCS accumulators and the RWST are also part of the ECCS, but are not considered part of an ECCS flow path as described by this LCO.

BASES

BACKGROUND (continued)

The ECCS flow paths consist of piping, valves, heat exchangers, and pumps such that water from the RWST can be injected into the RCS following the accidents described in this LCO. The major components of each subsystem are the centrifugal charging pumps, the RHR pumps, heat exchangers, and the **SI** pumps. Each of the three subsystems consists of two 100% capacity trains that are interconnected and redundant such that either train is capable of supplying 100% of the flow required to mitigate the accident consequences. This interconnecting and redundant subsystem design provides the operators with the ability to utilize components from opposite trains to achieve the required 100% flow to the core.

During the injection phase of LOCA recovery, a suction header supplies water from the RWST to the ECCS pumps. Mostly separate piping supplies each subsystem and each train within the subsystem. The discharge from the centrifugal charging pumps combines, then divides again into four supply lines, each of which feeds the injection line to one RCS cold leg. The discharge from the **SI** and RHR pumps divides and feeds an injection fine *to* each of the RCS cold legs. Throttle valves in the SI lines are set to balance the flow to the RCS. This balance ensures sufficient flow to the core to meet the analysis assumptions following a LOCA in one of the RCS cold legs. The flow split from the RHR lines cannot be adjusted. Although much of the two ECCS trains are composed of completely separate piping, certain areas are shared between trains. The most important of these are 1) where both trains flow through a single physical pipe, and 2) at the injection connections to the RCS cold legs. Since each train must suppiy sufficient flow to the RCS to be considered 100% capacity, credit is taken in the safety analyses for flow to three intact cold legs. Any configuration which, when combined with a single active failure, prevents the flow from either **ECCS** pump in a given train from reaching all four cold legs injection points on that train is unanalyzed and might render both trains of that ECCS subsystem inoperable.

For LOCAs that are too small to depressurize the RCS below the shutoff head of the **SI** pumps, the centrifugal charging pumps supply water until the RCS pressure decreases below the **SI** pump shutoff head. During this period, the steam generators are used to provide part of the core cooling function.

During the recirculation phase of **LOCA** recovery, RHR pump suction is transferred to the containment sump. The RHR pumps then supply the other ECCS pumps. Initially, recirculation is through the same paths as the injection phase. Subsequently, for large LOCAs, the recirculation phase includes injection into both the hot and cold legs.

BASES

BACKGROUND (continued)

The high and intermediate head subsystems of the ECCS also functions to supply borated water to the reactor core following increased heat removal events, such as a main steam line break (MSLB). The limiting design conditions occur when the moderator temperature coefficient is highly negative, such as at the end of each cycle.

During low temperature conditions in the RCS, limitations are placed on the maximum number of ECCS pumps that may be OPERABLE. Refer to the Bases for LCO 3.4.12, "Low Temperature Overpressure Protection (LTOP) System," for the basis of these requirements.

The ECCS subsystems are actuated upon receipt of an SI signal. The actuation of safeguard loads is accomplished in a programmed time sequence. If offsite power is available, the safeguard loads start immediately in the programmed sequence. If offsite power is not availabie, the Engineered Safety Feature (ESF) buses shed normal operating loads and are connected to the emergency diesel generators (EDGs). Safeguard loads are then actuated in the programmed time sequence. The time delay associated with diesel starting, sequenced loading, and pump starting determines the time required before pumped flow is available to the core following a safety injection actuation.

The active ECCS components, along with the passive accumulators and the RWST covered in LCO 3.5.1, "Accumulators," and LCO 3.5.4, "Refueling Water Storage Tank (RWST)," provide the cooling water necessary to meet GDC 35 (Ref. 1).

APPLICABLE SAFETY ANALYSES

The LCO helps to ensure that the following acceptance criteria for the ECCS, established by 10 CFR 50.46 (Ref. 2), will be met following a small break LOCA and there is a high level of probability that the criteria are met following a large break LOCA:

a. Maximum fuel element cladding temperature is ≤ 2200°F;

b. Maximum cladding oxidation is ≤ 0.17 times the total cladding thickness before oxidation;

c. Maximum hydrogen generation from a zirconium water reaction is ≤ 0.01 times the hypothetical amount generated if all of the metal in the cladding cylinders surrounding the fuel, excluding the cladding surrounding the plenum volume, were to react;

BASES

APPLICABLE SAFETY ANALYSES (continued)

d. Core is maintained in a coolable geometry; and

e. Adequate long term core cooling capability is maintained.

The LCO also limits the potential for a post trip return to power foilowing an MSLB event and ensures that containment pressure and temperature limits are met.

Each ECCS subsystem is taken credit for in a large break LQCA event at full power (Refs. 3 and 4). This event has the greatest potential to challenge the limits on runout flow set by the manufacturer of the ECCS pumps. It also sets the maximum response time for their actuation. Direct flow from the centrifugal charging pumps and SI pumps is credited in a small break LQCA event. The RHR pumps are also credited, for larger small break LOCAs, as the means of supplying suction to these higher head ECCS pumps after the switch to sump recirculation. This event establishes the flow and discharge head at the design point for the centrifugal charging pumps. The MSLB analysis also credits the SI and centrifugal charging pumps. Although some ECCS flow is necessary to mitigate a SGTR event, a single failure disabling one ECCS train is not the limiting single failure for this transient. The SGTR analysis primary to secondary break flow is increased by the avaiiabiiity of both centrifugal charging and SI trains. Therefore, the SGTR analysis is penalized by assuming both ECCS trains are operable as required by the LCQ. The OPERABILITY requirements for the ECCS are based on the following LQCA analysis assumptions:

a. A large break LQCA event, with loss of offsite power and a single failure disabling one ECCS train; and

b. A small break LBCA event, with a loss of offsite power and a single failure disabling one ECCS train.

During the blowdown stage of a LQCA. the RCS depressurizes as primary coolant is ejected through the break into the containment. The nuclear reaction is terminated either by moderator voiding during large breaks or control rod insertion for small breaks. Following depressurization, emergency cooling water is injected into the cold legs, flows into the downcomer, fills the lower plenum, and refloods the core.

The effects on containment mass and energy releases are accounted for in appropriate analyses (Ref. 3). The LCO ensures that an ECCS train will deliver sufficient water to match boiloff rates soon enough to minimize the consequences of the core being uncovered following a large LQCA.

BASES

APPLICABLE SAFETY ANALYSES (continued)

It also ensures that the centrifugal charging and SI pumps will deliver sufficient water and boron during a small LOCA to maintain core subcriticality. For smaller LOCAs, the centrifugal charging pump delivers sufficient fluid to maintain RCS inventory. For a small break LOCA, the steam generators continue to serve as the heat sink, providing part of the required core cooling.

The ECCS trains satisfy Criterion 3 of 10 CFR 50.36 (Ref. 5).

LCO

In MODES 1, 2, and 3, two independent (and redundant) ECCS trains are required to ensure that sufficient ECCS flow is available, assuming a single failure affecting either train. Additionally, individual components within the ECCS trains may be called upon to mitigate the consequences of other transients and accidents.

In MODES 1, 2, and 3, an ECCS train consists of a centrifugal charging subsystem, an SI subsystem, and an RHR subsystem. Each train includes the piping, instruments, and controls to ensure an OPERABLE flow path capable of taking suction from the RWST upon an SI signal and automatically transferring suction to the containment sump.

During an event requiring ECCS actuation, a flow path is required to provide an abundant supply of water from the RWST to the RCS via the ECCS pumps and their respective supply headers to each of the four cold leg injection nozzles. In the long term, this flow path may be switched to take its supply from the containment sump and to supply its flow to the RCS hot and cold legs. The flow path for each train must maintain its designed independence to ensure that no single failure can disable both ECCS trains.

APPLICABILITY

In MODES 1, 2, and 3, the ECCS OPERABILITY requirements for the limiting Design Basis Accident, a large break LOCA, are based on full power operation. Although reduced power would not require the same level of performance, the accident analysis does not provide for reduced cooling requirements in the lower MODES. The centrifugal charging pump performance is based on a small break LOCA, which establishes the pump performance curve and has less dependence on power. The SI pump performance requirements are based on a small break LOCA. For both of these types of pumps, the large break LOCA analysis depends only on the flow value at containment pressure, not on the shape of the flow versus pressure curve at higher pressures. MODE 2 and MODE 3 requirements are bounded by the MODE 1 analysis.

BASES

APPLICABILITY (continued)

This LCO is only applicable in MQDE 3 and above. Below MODE 3, the SI signal setpoint is manually bypassed by operator control, and system functional requirements are relaxed as described in LCO 3.5.3, "ECCS—Shutdown."

As indicated in the Note, the flow path may be isolated for 2 hours in MODE 3, under controlled conditions, to perform pressure isolation valve testing per SR 3.4.14.1. The flow path is readily restorable from the control room.

In MODES 5 and 6, plant conditions are such that the probability of an event requiring ECCS injection is extremely low. Core cooling requirements in MODE 5 are addressed by LCO 3.4.7, "RCS Loops—MODE 5, Loops Filled," and LCQ 3.4.8, "RCS Loops—MQDE 5, hoops Not Filled." MODE 6 core cooling requirements are addressed by LCO 3.9.4, "Residual Heat Removal (RHR) and Coolant Circulation—High Water Level," and LCO 3.9.5, "Residual Heat Removal (RHR) and Coolant Circulation—Low Water Level."

ACTIONS

With one or more trains inoperable and at least 100% of the ECCS flow equivalent to a single OPERABLE ECCS train available, the inoperable components must be returned to OPERABLE status within 72 hours. The 72 hour Completion Time is based on an NRC reliability evaluation (Ref. 6) and is a reasonable time for repair of many ECCS components.

An ECCS train is inoperable if it is not capable of delivering design flow to the RCS. individual components are inoperable if they are not capable of performing their design function or supporting systems are not available.

The LCO requires the OPERABILITY of a number of independent subsystems Due to the redundancy of trains and the diversity of subsystems, the inoperability of one component in a train does not render the ECCS incapable of performing its function. Neither does the inoperability of two different components, each in a different train, necessarily result in a loss of function for the ECCS. The intent of this Condition is to maintain a combination of equipment such that 100% of the ECCS flow equivalent to a single OPERABLE ECCS train remains available. This allows increased flexibility in plant operations under circumstances when components in opposite trains are inoperable.

BASES

ACTIONS (continued)

An event accompanied by a loss of offsite power and the failure of an EDG can disable one ECCS train until power is restored. A reliability analysis (Ref. 6) has shown that the impact of having one full ECCS train inoperable is sufficiently small to justify continued operation for 72 hours.

Reference 7 describes situations in which one component, such as an RHR crossover valve, can disable both ECCS trains. With one or more component(s) inoperable such that 100% of the flow equivalent to a single OPERABLE ECCS train is not available, the facility is in a condition outside the accident analysis. Therefore, LCO 3.0.3 must be immediately entered.

B.1 and 8.2

If the inoperable trains cannot be returned to OPERABLE status within the associated Completion Time, the plant must be brought to a MODE in which the LCQ does not apply. To achieve this status, the plant must be brought to MQDE 3 within 6 hours and MODE 4 within 12 hours. The allowed Compietion Times are reasonable, based on operating experience, to reach the required plant conditions from full power conditions in an orderly manner and without challenging plant systems.

SURVEILLANCE REQUIREMENTS

SR 3.5.2.1

Verification of proper valve position ensures that the flow path from the ECCS pumps to the RCS is maintained. Misalignment of these valves could render both ECCS trains inoperable. Securing these valves using the power disconnect switches in the correct position ensures that they cannot change position as a result of an active failure or be inadvertently misaligned. These valves are of the type, described in Reference 7, that can disable the function of both ECCS trains and invalidate the accident analyses. A 12 hour Frequency is considered reasonable in view of other administrative controls that will ensure a mispositioned valve is unlikely.

SR 3.5.2.2

Verifying the correct alignment for manual, power operated, and automatic vaives in the ECCS flow paths provides assurance that the proper flow paths will exist for ECCS operation. This SR does not apply to valves that are locked, sealed, or otherwise secured in position, since these were verified to be in the correct position prior to locking, sealing,

BASES

SURVEILLANCE REQUIREMENTS (continued)

or securing. A valve that receives an actuation signal is allowed to be in a nonaccident position provided the valve will automatically reposition within the proper stroke time. This Surveillance does not require any testing or valve manipulation. Rather, it involves verification that those valves capable of being mispositioned are in the correct position. The 32 day Frequency is appropriate because the valves are operated under administrative control.

This Frequency has been shown to be acceptable through operating experience.

SR 3.5.2.3

With the exception of the operating centrifugal charging pump, the ECCS pumps are normally in a standby, nonoperating mode. As such, flow path piping has the potential to develop voids and pockets of entrained gases. Maintaining the piping from the ECCS pumps to the RCS full of water by venting the ECCS pump casings and accessible discharge piping high points ensures that the system will perform properly, injecting its full capacity into the RCS upon demand. This will also prevent water hammer, pump cavitation, and pumping of noncondensible gas (e.g., air, nitrogen, or hydrogen) into the reactor vessel following an SI signal or during shutdown cooling. The 31 day Frequency takes into consideration the gradual nature of gas accumulation in the ECCS piping and the procedural controls governing system operation.

~~SR 3.5.2.4~~

Periodic surveillance testing of ECCS pumps to detect gross degradation caused by impeller structural damage or other hydraulic component problems is required by Section XI of the ASME Code. This type of testing may be accomplished by measuring the pump developed head at only one point of the pump characteristic curve. This verifies both that the measured performance is within an acceptable tolerance of the original pump baseline performance and that the performance at the test flow is greater than or equal to the performance assumed in the plant safety analysis. SRs are specified in the Inservice Testing Program, which encompasses Section XI of the ASME Code. Section XI of the ASME Code provides the activities and Frequencies necessary to satisfy the requirements.

BASES

SURVEILLANCE REQUIREMENTS (continued)

SR 3.5.2.5 and SR 3.5.2.6

These Surveillances demonstrate that each automatic ECCS valve actuates to the required position on an actual or simulated SI and Containment Sump Recirculation signal and that each ECCS pump starts on receipt of an actual or simulated SI signal. This Surveillance is not required for valves that are locked, sealed, or otherwise secured in the required position under administrative controls. The 18 month Frequency is based on the need to perform these Surveillances under the Conditions that apply during a plant outage and the potential for unplanned plant transients if the Surveillances were performed with the reactor at power. The 48 month Frequency is also acceptable based on consideration of the design reliability (and confirming operating experience) of the equipment. The actuation logic is tested as part of ESF Actuation System testing, and equipment performance is monitored as part of the Inservice Testing Program.

SR 3.5.2.7

The position of throttle valves in the flow path on an SI signal is necessary for proper ECCS performance. These valves have mechanical iocks *to* ensure proper positioning for restricted flow to a ruptured cold leg, ensuring that the other cold legs receive at least the required minimum flow. The 18 month Frequency is based on the same reasons as those stated in SR 3.5.2.5 and SR 3.5.2.6.

SR 3.5.2.8

Periodic inspections of the containment sump suction inlet ensure that it is unrestricted and stays in proper operating cundition. The 18 month Frequency is based on the need *to* perform this Surveillance under the conditions that apply during a plant outage and on the need to have access to the location. This Frequency has been found to be sufficient to detect abnormal degradation and is confirmed by operating experience.

BASES

REFERENCES

1. 10 CFR 50, Appendix A, GDC 35.

2. 10 CFR 50.46.

3. UFSAR, Section 6.2.1.

4. UFSAR, Chapter 15.

5. 10 CFR 50.36, Technical Specifications, (c)(2)(ii).

6. NRC Memorandum to V. Stello, Jr., from R.L. Baer, "Recommended Interim Revisions to LCOs for ECCS Components," December 1, 1975.

7. IE Information Notice No. 87-01.

Rank Question: 969 **Answer: C**

1 Pt(s)

Unit 1 is operating at 65% power following a turbine runback caused by a feed **pump** failure. Given the following events and conditions:

- The RO reports that rod control **bark** D has inserted past the rod insertion limit (RIL)
- Annunciator 1AD-2, B/9, ***Control Rod*** *Bank Lo-Lo* ***Limit,*** has not alarmed.
- IAE **has** reported that a failed annunciator card must be replaced but the **part** will not be available until next week.

Which one of the following actions is required in response to this failed alarm?

A. The shift **work** manager must initiate **a** temporary modification to change the *Control Rod Bank* Lo *Limit* (1AD-2, A/9) annunciator setpoint to the *Control Rod Bank Lo-Lo* rod insertion limit.

B. The unit supervisor must initiate a control panel information tag for the 1AD-2, B/9.

C. The operations **shift** manager shall ensure that aiternate indications are monitored to duplicate the function of the failed annunciator.

D. The reactor operator must enter the requirement to verify RIL limits manually during transients in the shift turnover log.

Distracter Analysis:

A. Incorrect: ***An*** increased surveillance sheet must be initiated.
Plausible: If the candidate does not know the requirement, this is a logical alternative.

B. Incorrect: *An* increased surveillance sheet must be initiated.
Plausible: Ifthe candidate does not know the requirement, this is a logical alternative.

C. Correct:

D. Incorrect: *An* increased surveillance sheet must be initiated.
Plausible: If the candidate does not know the requirement, this is a logical alternative.

Level: SRO Only 10CFR55.43(b)5

K A G 2.4.33 (2.4/2.8)

Lesson Plan Objective: ADM-NSO5 Obj: 27

Source: New

Level of **howledge:** memory

References:
I. OP-CN-ADM-NSO5 **page** 11
2. OMP *2-3* 1 **page 2**

	Objective	ISS	NLO	LPRO	LPSO	PTRQ
12	Describe the process for approval and extension of Technical Memorandums.				X	X
13	State the Work List philosophy (OMP 2-5).				X	X
14	Describe the Work List Priority scheme and how priority conflicts are resolved (OMP 2-5)				X	X
15	Describe how the Work List is completed (OMP 2-5)				X	X
16	Explain personnel responsibilities for key control (OMP 2-9)	X		X	X	X
17	Describe restrictions/requirements for the use of file keys. (OMP 2-9)	X		X	X	X
18	Describe restrictions/requirements for long term key removal. (OMP 2-9)	X		X	X	X
19	Describe precautions associated with the use of interlock keys	X		X	X	X
20	Explain the process for audit of the key locker (OMP 2-9)				X	X
21	State the requirement to ensure the control room is aware of any manipulation of systems that will impact plant operation. (OMP 2-16)	X				
22	Describe the expectations for Control Room personnel response to Control Room alarms (NSD 509)			X	X	X
23	Describe the requirements and policies for Control Room access control (OMP 2-16, SD 3.1.20,).	X		X	X	X
24	Describe the expectations for conduct of personnel while in the Control Room (OMP 2-16)	X		X	X	X
25	Explain the process of maintaining the Unified Logbook in accordance with OMP 2-17 (as appropriate to job level). (OMP 2-17)	X		X	X	X
26	Describe the responsibilities and actions that should be performed before, during and after the formal transfer of shift responsibilities. (OMP 2-22)	X		X	X	X
27	Explain the process of maintaining Control Room Instrumentation Status Logs and actions required for failed annunciators. (QMP 2-32)			X	X	X
28	Describe how to initiate a corrective work request. (WFM 401)	X		X		X

5. Alarm response during execution of EPs/APs
6. Alarm response during Crew Briefs.
7. Exceptions to normal alarm response protocol.

2.6 Unit Unified Logbooks

A. Using OMF **2-17,** (Unit Unified Logbook Maintenance), review responsibilities and processes associated with the Unit Supervisor and Control Room sublogs. (Obj. #25):

1. Personnel responsible for maintaining Control Room and Unit Supervisor and FT sublogs.
2. General instructions and entry procedures.
3. Definition of OPEN ITEM and how OPEN ITEMs are documented.
4. Logbook required entries.
5. Test Logbook (PT Sublogs)

B. Using OMP 2-34, (Control Room Instrumentation Status), review the process involved in maintaining the Control Room Annunciator Status Cog, audits and increased surveillance. (Obj. #27)

2.7 Key Control

A. Using OMP 2-9, (Administration and Control of Keys), review personnel responsibilities for control of keys. (Obj. #16)

B. Using OMF 2-9, (Administration and Control of Keys), describe requirements/restrictions for:

1. Use of File Keys (Obj. #17)
2. Long Term Key Removal (Qbj. #18)
3. Interlock Keys (Obj. #19)

2.8 Work Requests (Obj. #28)

A. Refer to WFM 401 (Problem Communication Guidelines)

B. Problem Communication

1. Normally problems with plant equipment are communicated to the Work Control Single Point Of Contact (SFOC) via the WMS Problem Identifier Screen (R005 or R010).
2. For emergency work, SPOC should be notified of problems by telephone. SPOC will complete work request documentation **as** required.
3. Problem complexity may require that the problem be communicated in person in the Work Control Center.

4. Responsibilities

4.1. The Reactor Operators (ROs) are responsible for review and knowledge of Control Room annunciator status.

4.2. The Unit Lead is responsible for Increased Surveillance Items.

A. The Unit Lead should work with Engineering to ensure there are no problems with using the Increased Surveillance.

B. The Unit Lead should work with Work Control to ensure timely completion of any work order creating the need for an Increased Surveillance.

4.3. The Operations Shift Manager (OSM) is responsible for actions on failed instruments/annunciators.

5. Annunciator Status Log Instructions

5.1. Control Room annunciator status shall be reviewed at turnover per OMP 2-22 (Shift Turnover').

5.2. "Strapped" Bistable Inputs

- Bistable with "strapped" inputs shall be reviewed at turnover per OMP 2-22 (Shift 'turnover).
- As directed by IAE procedures, distinctive red flags shall be placed on "strapped bistable windows.

5.3. Annunciators with inputs disabled by Temporary Modifications (TM) shall be recorded on Attachment 8.1 (TMs Affecting Control Room Annunciators).

- Attachment shall be filed in Ops Shift Routine Logbook.

6. Action on Failed Instrumentation/Annunciators

6.1. The OSM shall ensure that alternate indications are monitored to duplicate the function of the failed instrumentation/annunciator.

- Alternate indications to be monitored shall be recorded on an Increased Surveillance Sheet (Attachment 8.2) per Section 7.

6.2. The Shift Work Manager shall be notified of any instrumentation determined to be failed.

B/9

CONTROL ROD BANK LO-LO LIMIT

SETPOPNT: Variable, calculated based on auctioneered high D/T.

ORIGIN: Rod insertion limit computer.

PROBABLE CAUSE:
1. Boron concentration too low for power and/or Xenon conditions.
2. Reactor Shutdown.
3. Rod insertion limit computer or instrument malfunction.
4. Major load rejection or transient.

AUTOMATIC ACTIONS: None

IMMEDIATE ACTIONS:
1. Stop **any** dilution in progress.
2. Refer to AP/1/A/5500/013 (Boron Dilution).
3. Determine affected control bank(s) by referring to 1RFM17 in Cable Spreading Room (AUX *547)* and acknowledge the alarm.

SUPPLEMENTARY ACTIONS:
1. Refer to TS 3.1.6 (Control **Bank** Insertion Limits).
2. Refer to TS 3.1.I (Shutdown Margin (SDM)).

REFERENCES:
1. **TS** 3.1. **I** (Shutdown Margin (SDM)) and TS **3.1.6** (Control Bank Insertion Limits).
2. FSAR, Figure 7-2 (Part 9 of **16)**

A/9

CONTROL ROD BANK LO LIMIT

SETPOINT: Variable calculated based on auctioneered high D/T

ORIGIN: Rod insertion limit computer.

PROBABLE CAUSE:
1. Boron concentration too low for power and/or Xenon conditions.
2. Rod insertion limit computer or instrument malfunction.
3. Major load rejection or transient.

AUTOMATIC ACTIONS: None

IMMEDIATE ACTIONS:
1. Stop any dilution in progress.
2. Determine affected control bank(s) by referring to 1RFM16 in Cable Spreading Room (AUX 577) and acknowledge the alarm.

SUPPLEMENTARY ACTIONS:
1. Borate coolant system as necessary until alarm clears per OP/1/A/6150/009 (Boron Concentration Control).
2. IE due to temperature instrument malfunction, defeat affected instrument using "T-AVG DEFEAT" and "ATEMP DEFEAT" switch.
3. Refer to TS 3.1.6 (Control Bank Insertion Limits).
4. IE due to instrument failure, have IAE trip bistable on affected channel per Tech Spec Action.

REFERENCES:
1. TS 3.1.1 (Shutdown Margin (SDM) and TS 3.1.6 (Control Rank Insertion Limits)
2. FSAR, Figure 1-2 (Part 9 of 16)

Bank Question: 962 **Answer: D**

1 Pt(s)

Unit 1 is conducting a containment ais release at 85% power. Given the following events and conditions:

- The last containment atmosphere sample at 0600 was consistent with the current gaseous waste release (GWR) permit.
- The latest air release was started at 1400.
- The release flow indicator on 1MC-5 reads 200 CFM.
- 1EMF-36 (Unit Vent Gas Monitor) is at the trip 1 setpoint.
- The VQ flow totalizer is out of service.

Which of the following conditions reported at 1700 requires isolation of the air release until a new GWR permit is approved?

A. The VQ air release flow indicator on 1MC-5 fails high.

B. 1EMF-39 (Containment Gas Monitor) increases to Trip 2 alarm due to a power supply fluctuation.

C. The 1800 containment atmosphere sample must be delayed for 4 hours due to sample valve repairs.

D. 1EMF-37 (Unit Vent Iodine Monitor) increases to Trip 2 alarm due to a fuel pin failure.

Distracter Analysis:

A. Incorrect: The flow indicator is not required to conduct/continue an air release.
Plausible: If the candidate believes that release flow is critical with the totalizer out of service.

B. Incorrect The release can be reset and continued on the current GWR.
Plausible: If the candidate does not know that spurious trips can be reset twice.

C. Incorrect: The release can continue on the current GWR as long as the sample is analyzed within 24 hours of the previous sample.
Plausible: If the candidate thinks the sample frequency (12 hrs) is the GWR validation requirement.

D. Correct:

Level: SRO Only 10CFR55.43(b)4

KA: SYS 029 G 2.3.8 (2.3/3.2)

Lesson Plan Objective: CNT-VQ Obj: **4**

Source: New

Level of knowledge: comprehension

References:
1. OP-CN-CNT-VQ pages 9
2. OP/1/A/6450/17
3. OP/1/A/6450/17 Encl 4.2
4. OP/1/A/6450/17 Encl **4.3**

	Objective	ISS	NLO	LPRO	LPSO	PTRQ
1	State the purpose of the VQ system	X	X	X	X	
2	Describe the sources of pressure fluctuations in containment during normal operations	X	X	X	X	X
3	Describe the signal that will auto stop a VQ fan			X	X	X
4	Given appropriate plant conditions, apply Limits and Precautions associated with related station procedures.			X	X	X
5	Explain how an ais addition from containment is accomplished			X	X	X
6	Explain how an air release from containment is accomplished			X	X	X
7	Describe the signals or conditions that will terminate a release or addition			X	X	X
8	Describe the effect a S_H signal has on VQ			X	X	X
9	Given a set of specific plant conditions and access to reference materials, determine the actions necessary to comply with Tech ecs/SL			X	X	X
10	Show the flow path for a release or addition when given a drawing of the VQ system	X	X			

TIME: 1.0 Hour

2. Air Release Mode is performed if containment pressure is greater than 0.09 psig and a release is desired. Refer to OP/1/A/6450/017 Enclosure **4.2** (OBJ. 6)

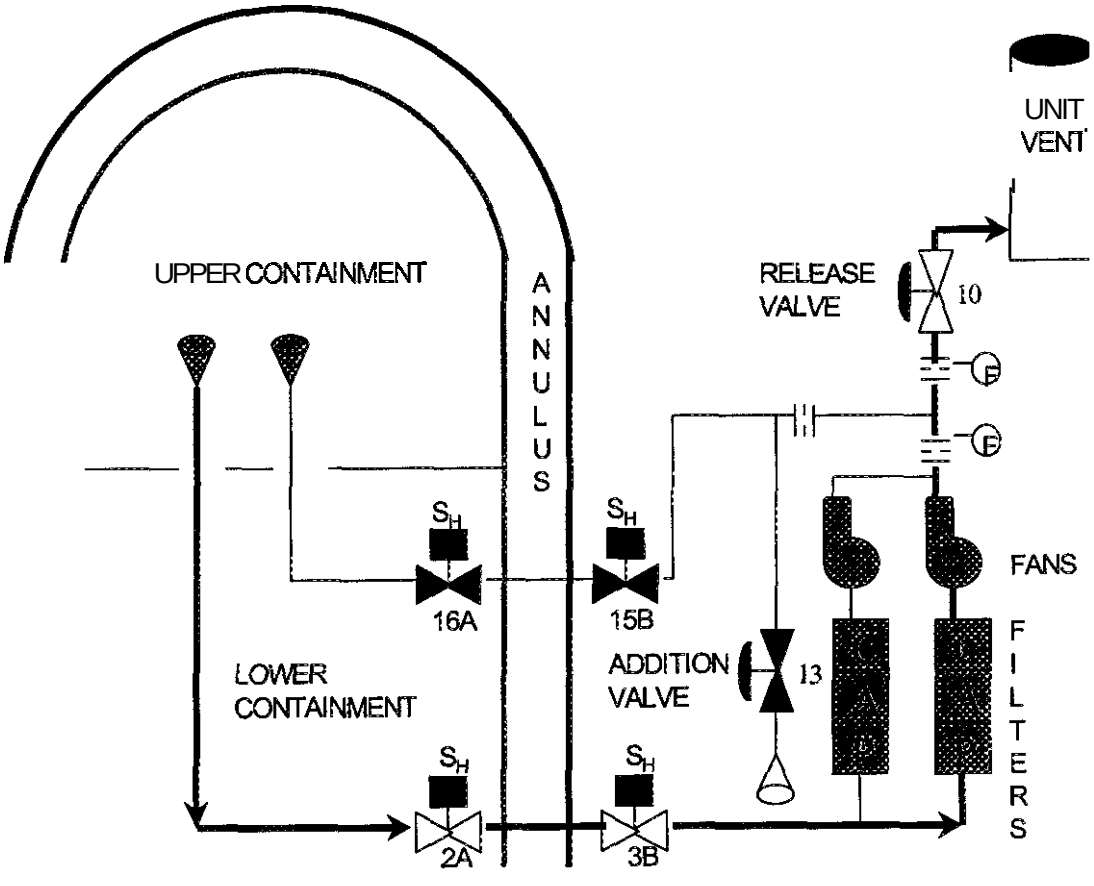

3. Initiating and terminating a GWR form refer to OP/1/A/6450/017 Enclosure 4.3

4. Signals or conditions that terminate **a** release or addition (OBJ. 7)

a) At any time **by** manual operator action from the control *room.*

b) Automatically when containment pressure returns to 0 **psig** by closing VQ-10 or **VQ-23.**

c) The Containment Ais Release Fans automatically shut off when **low** flow is detected at fan discharge.

d) EMF-35, 36, 37 trig 2 **will** auto close VQ-10.

Containment Air Release and Addition System

1. Purpose

To outline the proper operation of the Containment Air Release and Addition System.

2. Limits and Precautions

2.1 Do **NOT** exceed Containment Pressure Limits **of** -0.08 psig and +0.25 psig. Tech Spec Containment Pressure Limits are -0.1 **psig** to +0.3 psig.

2.2 When manually operating any motor operated valve, minimize the torque applied to the handwheels.

2.3 After manual operation, maintenance or packing adjustment of any motor operated Safety Related valve, it shali be cycled electrically to ensure reliable automatic operation.

2.4 Pressure switches for valve operation should **NOT** be manually overridden since ice condenser doors are very sensitive to over or under pressure conditions.

2.5 When Containment Air Release Filter unit pre-filter or absolute filter differential pressure reaches 2.5 inches H_2O, the standby fan should be placed in service and action initiated to replace the dirty filter(s).

2.6 A new Gaseous Waste Release (GWR) sample is required if:

- 24 hours has elapsed since **the** last sample.
- VQ release is automatically terminated due to a valid controlling EMF actuation. If actuation is due to **an** EMF spike, the release may **be** re-attempted twice before a new sample is required.

2.1 A VP, VQ or Unit Vent Sample is required if:

- **Rx** Trip or Startup occurs.
- Rated Thermal Power change of ≥ 15% in one hour occurs followed by a Thermal Power Stabilization (power level constant at desired power level).

2.8 **If** 1EMF-37 or 1EMF-40 has reached the Trip 1 setpoint, RP should be notified to change the cartridge before a release is attempted.

3. Procedures

Refer to Section 4 (Enclosures).

4. Enclosures

4.1 Air Addition Mode

4.2 Air Release Mode

4.3 Initiation and Termination of a GWR Permit Report

4.4 Auxiliary Building Valve Checklist

4.5 Reactor Building Valve Checklist

4.6 Auxiliary Building Separate Verification Valve Checklist

4.7 Reactor Building Separate Verification Valve Checklist

4.8 Manual Air Addition Mode

1. Initial Conditions

1.1 Review the Limits and Precautions.

1.2 Verify Containment Pressure > 0.09 psig.

____ 1.3 Verify CR SRO has signed and dated the appropriate sheet of the Gaseous Waste Release (GWR) Record authorizing releases:

- ☐ "VQ release monitored by EMF 39(L)"
- ☐ "VQ release monitored by EMF 36(L)"

____ 1.4 Verify Containment pressure increase is **NOT** due to a LOCA or steam line break.

1.5 Review the "SPECIAL INSTRUCTIONS FOR RELEASE" section on the GWR Permit Report.

2. Procedure

____ 2.1 Ensure the following enclosures are complete:

- ☐ Enclosure 4.4 (Auxiliary Building Valve Checklist)
- ☐ Enclosure 4.5 (Reactor Building Valve Checklist)
- ☐ Enclosure 4.6 (Auxiliary Building Separate Verification Valve Checklist)
- ☐ Enclosure 4.7 (Reactor Building Separate Verification Valve Checklist)

2.2 Perform the following to sign off the "EMF Operable and Source Checked" blank on the appropriate Gaseous Waste Release (GWR) Record

2.2.1 **IF** 1EMF-39 (low range) is operable, perform the following:

2.2.1.1 Verify 1EMF-39 is specified for use on the GWR Permit Report.

2.2.1.2 Verify 1EMF-39 is operable per SLC 16.11-7 using OP/0/A/6500/080 (EMF RP86A Output Modules).

2.2.1.3 Set 1EMF-39 (low range) setpoints to the value specified on the GWR Permit Report using OP/0/A/6500/080 (EMF RP86A Output Modules).

NOTE: The person performing the following step shall **NOT** be the same as in Step 2.2.1.3.

2.2.1.4 Verify trip setpoints are set to the values as specified on the GWR Permit Report using OP/0/A/6500/080 (EMF RP86A Output Modules).

____ 2.2.2 **IF** 1EMF-39 (low range) is inoperable **AND** 1EMF-36 (low range) is to be used to monitor this release, perform the following:

☐ 2.2.2.1 Verify 1EMF-36 is specified for use on the GWR Permit Report.

☐ 2.2.2.2 Verify 1EMF-36 **is** operable using OP/0/A/6500/080 **(EMF** RP86A Output Modules).

NOTE:	1EMF-36 (low range) trip setpoints are pre-established for offsite dose.

☐ 2.2.2.3 Verify trip setpoints are set ***to*** the values as specified on the GWR Permit Report using OP/0/A/6500/080 (EMF RP86A Output Modules).

☐ 2.2.2.4 N/A the "IV" blank on the "VQ release monitored by EMF 36(L)" sheet of the Gaseous Waste Release (GWR) Record.

____ 2.2.3 **IE** 1EMF-39 **AND** 1EMF-36 are both inoperable, **perform** the following:

☐ 2.2.3.1 Verify EMF-39 and EMF-36 are both N/Aed on the GWR Permit Report.

☐ 2.2.3.2 Notify RP to take grab samples per HP/0/B/1004/005 (Containment Air Release and Addition (VQ) And Containment Purge Ventilation (VP) System Release).
Person notified _____

☐ 2.2.3.3 N/A the "EMF Operable and Source Checked" blanks on the Gaseous Waste Release (GWR) Record.

☐ 2.2.3.4 N/A Step 2.3.

____ 2.3 Set up EMF Chart **re** order as follows:

2.3.1 Ensure the paper drive **is** on for the applicable EMF chart recorder:

- 1MICR6640 if 1EMF-39 **(L) is** used
- 1MICR6650 if 1EMF-36 (L) is used

2.3.2 **Stamp** and record the following on the chart paper:

- Date
- Time
- GWR #
- Initials

_____ SV 2.4 Adjust "1VQ-10 VQ Fans Disch To Unit Vent" manual loader (1MC5) to ≤ the "Recommended Release Rate (cfm)" on the GWR Permit Report.

2.5 Record the following on the appropriate Gaseous Waste Release (GWR) Record.

2.5.1 IF the totalizer is operable, reset it and enter "0" in the "Initial Integrator Reading" blank

2.5.2 IF the totalizer is inoperable, N/A the "Initial Integrator Reading" blank.

2.6 Open the following valves (1MC5):
Record date/time first valve is opened _____/_____

☐ IVQ-2A (VQ Fan Suct From Cont Isol)
☐ 1VQ-3B (VQ Fan Suct From Cont Isol)

2.7 Place one VQ train in service as foilows (1MC5):

_____ 2.7.1 To place A train in service, perform the following:

☐ 2.7.1.1 Place "VQ Filt Htr A" in the "AUTO" position.

☐ 2.7.1.2 Start "Cont Air Rel Fan 1A".

_____ 2.7.2 To place B train in service, perfonn the following:

☐ 2.7.2.1 Place "VQ Filt Htr B" in the "AUTO" position.

☐ 2.7.2.2 Start "Cont Air Rel Fan 1B".

2.8 Notify RP that the VQ release has been started and give start time as recorded in Step 2.6.
Person notified _____

_____ 2.9 Record the VQ start date/time on the following:

☐ Appropriate Gaseous Waste Release (GWR) Record
☐ Control Room Autolog

NOTE: Containment pressure shall be monitored to ensure 1VQ-10 (VQ Fans Disch To Unit Vent) closes at 0 psig to prevent a negative pressure inside containment.

____ 2.10 **IF** the OAC **OR** Computer Point C1P1112 (Average Containment Pressure, best) is out of service, record containment pressure as read on 1VQP5040 (Containment **Pressure)** on 1MC5 every 30 minutes in the Control Room Log for the duration ***of*** the VQ Release. {PIP93-0074}

____ 2.11 **IF** the VQ fan does **NOT** automatically shutdown at approximately 0 **psig,** perfom the following:

- N/A Step 2.12.
- Perform Step 2.13.

____ 2.12 **WHEN** Containment pressure decreases to approximately 0 psig, verify that "1VQ-10 VQ Fans Disch To Unit Vent" closes, by no flow indicated on the manual loader (black needle).

SV 2.13 Revet "1VQ-10 VQ Fans Disch To Unit Vent" by adjusting the manual loader fully counterclockwise.

2.14 Secure the VQ train placed in service in Step 2.7 as follows:

____ 2.14.1 To secure A train, perform the following:

5 2.14.1.1 Ensure "Cont Air Rel Fan 1A" has stopped.

☐ 2.14.1.2 Place "VQ Filt Htr A" in the "OFF" position

2.14.2 To secure B train, perform the following:

☐ 2.14.2.1 Ensure "Cont Air Rel Fan 1B" has stopped.

☐ 2.14.2.2 Place "VQ Filt Btr B" in the ""OFF" position

2.15 Close the following valves:
Record date/time both valves are closed _____/_____

☐ 1VQ-2A (VQ Fan Suct From Cont Isol)
☐ IVQ-3B (VQ Fan Suct From Cont Isol)

_____ 2.16 Stamp and record the following on the chart paper:

- Date
- Time
- GWRX
- Initials

_____ 2.17 Notify RP that the VQ release **has** been terminated and give termination time **as** recorded in Step 2.15.
Person notified _____

2.18 Record **the** VQ terminate date/time on the following:

☐ Appropriate Gaseous Waste Release (GWR) Record
☐ Control Room Autolog

2.19 Record the following on the appropriate Gaseous Waste Release (GWR) Record

2.19.1 **IF** the totalizer is operable, perform the following:

2.19.1.1 Record totalizer reading _____

2.19.1.2 Record totalizer value in "Final Integrator Reading" blank of the appropriate Gaseous Waste Release (GWR) Record sheet.

2.19.1.3 Enter the volume released in the "Volume" blank.
* Volume = final integrator reading X 10.

2.19.2 **IF** the totalizer is inoperable, perform the following:

2.19.2.1 N/A the "Final Integrator Reading" blank.

2.19.2.2 Enter the volume released in the "Volume" blank.

- Volume = 350 CFM X Release Time (in minutes).
- Release Time = Date/Time initiated - Date/Time terminated.

2.19.3 Enter the "Highest **EMF** Reading" during the release as **read** on the chart recorder.

2.19.4 Sign the "Control Room Operator" blank.

NOTE: If any trip setpoint is greater than 1000 cpm, round down to the nearest 100 prior to entering to ensure the entered setpoint remains conservative.

2.20 **IF** 1EMF-39 was used **for** this release, reset 1EMF-39 (low range) trip setpoints using OP/0/A/6500/080 (EMF RP86A Output Modules):

____ 2.20.1 **IF** in Mode **5** or **6,** the **trip** setpoints shall be as follows:

- Trip 2 = 17,400 cpm + Existing reading, Rounded down to the nearest 100 cpm
- **Trip** 1 = Trip 2 X .70

____ 2.20.2 **IF** in Mode 1, 2, 3 or 4, the **trip** setpoints shall be set as follows:

- Trip 2 = 3 X Containment Atmosphere Activity (sampled at all three locations) **as** indicated by EMF allowing about IS minutes for indication to stabilize.
- **Trip** 1 = **Trip** 2 X .70.

2.20.3 Signoff "EMF Setpoints Reset" blank **on the** "VQ release monitored by EMF 39(L)" sheet of the **Gaseous** Waste Release (GWR) Record.

NOTE: The person performing the following step shall **NOT** be the same as in Step 2.20.3.

2.20.4 Verify trip setpoints are reset as described in **Step** 2.20.1 or 2.20.2 using OP/0/A/6500/080 (EMF RP86A Output Modules).

2.21 **IF** 1EMF-36 was used for this ***release,*** N/A the "EMF Setpoints Reset" blank on the "VQ release monitored by EMF 36(L)" sheet **of** the Gaseous Waste Release (GWR) Record.

2.22 Do **NOT** file this enclosure in the Control Copy folder of this procedure.

Information Use

1. Initial Conditions

1.1 Review the Limits and Precautions.

1.2 Verify Radiation Protection has taken a sample and has issued a new GWR Permit Report.

2. Procedure

2.1 Request the CR SRO sign, date and time the appropriate sheet of the Gaseous Waste Release (GWR) Record authorizing releases.

NOTE: At this point, the GWR Permit Report for the VQ System is valid. The VQ System can be started and stopped as often as desired as long as the GWR Permit Report remains valid. Subsequent steps in this section will terminate the GWR Permit Report when Radiation Protection declares the GWR Permit Report invalid.

2.2 The following steps are to aid the operator in terminating the GWR Permit Repoa:

2.2.1 Add all values in the "VQ Volume" column of the appropriate sheet of the Gaseous Waste Release (GWR) Record. Record total in "Total Volume Released" blank.

2.2.2 Ensure the CR SRO performs the following:

2.2.2.1 Sign, date and time the "Termination of GWR Release Acknowledged by Shift Supervisor or Designee" blank of the appropriate sheet of the Gaseous Waste Release (GWR) Record.

2.2.2.2 Place the completed VQ GWR Permit Report in the completed release box.

Bank Question: $36.1 **Answer: A**

1 Pt(s) Unit 1 recently shut down. Given the following events and conditions:

- NCS temperature is 230°F.
- Both trains of ND are operable with A train in service
- KC loops A and B are operating.
- CAPT is tagged for maintenance.
- CA pump 1B and CA pump 1A are isolated for differential pressure testing.
- Engineering has reported that a test on the 1B KC heat exchanger showed that fouling had reduced its heat transfer capability beiow the minimum design value.
- The plant is expected to remain in mode 4 for another 7 days for special testing.

What is the EARLIEST action required for the operators to take?

REFERENCES PROVIDED: Tech Spec's 3.4.6, 3.7.5, 3.7.7 and Bases

A. Return at least one motor driven CA pump to operable status or be in mode 5 within 24 hours.

B. Return at least one motor driven CA pump to operable status or be in mode 5 within 72 hours.

C. Clean the 1B KC heat exchanger within 72 hours or be in mode 5 within the next 36 hours.

D. Clean the 1B KC heat exchanger within 72 hours or be in mode 5 within the newt 42 hours.

Distracter Analysis: One loop of KC is operable therefore one loop of ND is operable. With both MDCA pumps isolated, the S/Gs do not have a source of feedwater. Tech Spec 3.4.6 requires CA to be operable for the NC loops to be operable. Action statement B of Tech Spec 3.4.6 applies.

A. Correct answer: Without an operable CA pump to supply S/Gs, the NC loops are not operable in mode 4 (TS 3.4.6 bases). Action statement B applies. Tech Spec 3.7.5 action D (do not change modes) does not apply because the plant is not in modes 1-3.

B. Incorrect: This does not restore CA and meet Tech Spec 3.4.6
Plausible: Meets the Tech Spec 3.7.5 action B for one train of CA inoperable.

C. **Incorrect:** must be in mode **5** within 24 hours.
Plausible: This is the correct answer for TS 3.7.7 action B.

D. **Incorrect:** must be in mode **5** within 24 hours.
Plausible: if the candidate adds the time **allowed** to reach mode 3 ***(6*** hrs) to the mode 5 action time (36 hrs) in TS 3.7.7 action B.

Level: SRO Only 10CFR55.43(b)3

KA: G2.1.33 (3.4/4.0)

Lesson Plan Objective: PSS-KC Obj: 13

Source: **Mod** Ques_936 NRC McGuire 2002

Level of knowledge: comprehension

References:
1. Tech Spec 3.4.6 and bases - PROVIDED
2. Tech Spec3.7.5 and Bases - PROVIDED
3. Tech Spec 3.7.7 and bases - PROVIDED

	Objective	ISS	NLO	LPRO	LPSO	PTRQ
1	State the purpose of the KC System.	X	X	X	X	
2	Describe how the KC System is cooled.	X	X	X	X	
3	Describe the normal flowpath of the KC System, including each header and the type of loads serviced by each.	X	X	X	X	X
4	Explain what happens in the KC System during: - Safety Injection (Ss) - Phase A Containment Isolation (St) - Phase B Containment Isolation (Sp) - Blackout - Low Low KC Surge Tank Level	X	X	X	X	X
5	Given appropriate plant conditions, apply limits and precautions associated with OP/1(2)/A/6400/005 (Component Cooling Water System)	X	X	X	X	X
6	State the typical values of the KC pump discharge pressure, KC Hx outlet temperature and KC pump flow.	X	X	X	X	X
7	State the basic actions required of an NLO for a loss of Component Cooling Water and why.	X	X			
8	Describe KC system makeup.	X	X			
9	Draw a block diagram of the KC system per the KC System Simplified Drawing.	X	X			
10	Explain when the Chemistry group is to be notified concerning the KC system.	X	X	X	X	X
11	Describe the purpose of the EMF's associated with the KC System and what is indicated by a high level radiation alarm.	X	X	X	X	X
12	List the instrumentation available in the control room for the KC System.			X	X	
13	When given a set of plant conditions and access to reference materials, determine the actions necessary to comply with Tech Spec/SLC's.			X	X	X
14	Discuss the supplementary actions for the loss of KC AP.			X	X	X

3.4 REACTOR COOLANT SYSTEM (RCS)

3.4.6 RCS LOOPS — MODE 4

LCO 3.4.6 Two loops consisting of any combination of RCS loops and residual heat removal (RHR) loops shall be OPERABLE, and one loop shall be in operation.

---NOTES---

1. All reactor coolant pumps **(RCPs)** and RHR pumps may **be** de-energized for ≤ 1 hour per 8 hour period provided:

   a. No operations are permitted that would came reduction of the RCS boron concentration; and

   b. Core outlet temperature is maintained at least 10°F below saturation temperature.

2. No RCP **shall** be started with any RCS cold **leg** temperature ≤ 285°F unless the secondary side water temperature of each steam generator (SG) is ≤ 50°F above each of the RCS cold leg temperatures.

APPLICABILITY: MODE 4

ACTIONS

CONDITION	REQUIRED ACTION	COMPLETION TIME
A. One RCS loop OPERABLE. AND Two RHR loops inoperable.	A.1 Initiate action to restore a second loop to OPERABLE status.	Immediately

(continued)

ACTIONS (continued)

CONDITION	REQUIRED ACTION	COMPLETION TIME
B. One RHR loop OPERABLE. AND ALL RCS loops inoperable.	B.1 Be in MODE 5	24 hours
C. Both required RCS or RHR loops inoperable. OR No RCS or RHR loop in operation.	C.1 Suspend all operations involving a reduction of RCS boron concentration. AND C.2 Initiate action to restore one loop to OPERABLE status and operation.	Immediately immediately

SURVEILLANCE		FREQUENCY
		12 hours
SR 3.4.6.2	Verify SG secondary side water levels are ≥ 12% narrow range for required RCS loops	12 hours
SR 3.4.6.3	Verify correct breaker alignment and indicated power are available to the required pump that is not in operation.	7 days

B 3.4 REACTOR COOLANT SYSTEM (RCS)

B 3.4.6 RCS Loops—MODE 4

BASES

BACKGROUND

In MODE 4, the primary function of the reactor coolant is the removal of decay heat and the transfer of this heat to either the steam generator (SG) secondary side coolant or the component cooling water via the residual heal removal (RHR] heat exchangers. The secondary function of the reactor coolant is to act as a carrier for soluble neutron poison, boric acid.

The reactor coolant is circulated through four RCS loops connected in parallel *to* the reactor vessel, each loop containing an SG, a reactor coolant pump (RCP), and appropriate flow, pressure, level, and temperature instrumentation for control, protection, and indication. The RCPs circulate the coolant through the reactor vessel and SGs at a sufficient rate to ensure proper heat transfer and to prevent boric acid stratification,

In MODE 4, either RCPs or RHR loops can be used to provide forced circulation. The intent of this LCO is to provide forced flow from at least one RCP or one RHR loop for decay heat removal and transport. The flow provided by one RCP loop or RHR loop is adequate for decay heat removal. The other intent of this LCO is to require that *two* paths be available to provide redundancy for decay heat removal.

APPLICABLE SAFETY ANALYSES

In MODE 4, RCS circulation is considered in the determination of the time available for mitigation of the accidental boron dilution event. The RCS and RHR loops provide this circulation.

RCS Loops—MODE 4 satisfy Criterion 4 of 10 CFR 50.36 (Ref. 1)

LCO

The purpose of this LCO is *to* require that at least two loops be OPERABLE in MODE 4 and that one of these loops be in operation. The LCO allows the two loops that are required to be OPERABLE to consist of any combination of RCS loops and RHR loops. Any one loop in operation provides enough flow to remove the decay heat from the core with forced circulation. An additional loop is required to be OPERABLE to provide redundancy for heat removal.

Note 1 permits all RCPs or RHR pumps to be de-energized for ≤ 1 hour per 8 hour period. The purpose of the Note is to permit tests that are designed to validate various accident analyses values. One of the tests

BASES

LCO (continued)

performed during the startup testing program is the validation of rod drop times during cold conditions, both with and without flow. The no flow test may be performed in MODE 3, 4, or 5 and requires that the pumps be stopped for a short period of time. The Note permits the de-energizing of the pumps in order to perform this test and validate the assumed analysis values. If changes are made to the RCS that would cause a change to the flow characteristics of the RCS, the input values must be revalidated by conducting the test again. The 1 hour time period is adequate to perform the test, and operating experience has shown that boron stratification is not a problem during this short period with no forced flow.

Utilization of Note 1 is permitted provided the following conditions are met along with any other conditions imposed by initial startup test procedures:

a. No operations are permitted that would dilute the RCS boron concentration, therefore maintaining the margin to criticality. Boron reduction is prohibited because a uniform concentration distribution throughout the RCS cannot be ensured when in natural circulation; and

b. Core outlet temperature is maintained at least 10°F below saturation temperature, so that no vapor bubble may form and possibly cause a natural circulation flow obstruction.

Note 2 requires that the secondary side water temperature of each SG be ≤ 50°F above each of the RCS cold leg temperatures before the start of an RCP with any RCS cold leg temperature ≤ 285°F. This restraint is to prevent a low temperature overpressure event due to a thermal transient when an RCP is started.

An OPERABLE RCS loop comprises an OPERABLE RCP and an OPERABLE SG in accordance with the Steam Generator Tube Surveillance Program, which has the minimum water level specified in SR 3.4.6.2. The water level is maintained by an OPERABLE AFW train in accordance with LCO 3.7.5, "Auxiliary Feedwater System."

Similarly for the RHR System, an OPERABLE RHR loop comprises an OPERABLE RHR pump capable of providing forced flow to an OPERABLE RHR heat exchanger. RCPs and RHR pumps are OPERABLE if they are capable of being powered and are able to provide forced flow if required.

BASES

APPLICABILITY

In MODE 4, this LCO ensures forced circulation of the reactor coolant to remove decay heat from the core and to provide proper boron mixing. One loop of either RCS or RHR provides sufficient circulation for these purposes. However, two loops consisting of any combination of RCS and RHR loops are required to be OPERABLE to meet single failure considerations.

Operation in other MODES is covered by:

LCO 3.4.4, "RCS Loops—MODES 1 and 2";
LCO 3.4.5, "RCS Loops—MODE 3";
LCO 3.4.7, "RCS Loops—MODE 5, Loops Filled";
LCO 3.4.8, "RCS Loops—MODE 5, Loops Not Filled";
LCO 3.4.17, "RCS Loops—Test Exceptions";
LCO 3.9.4, "Residual Heat Removal (RHR) and Coolant Circulation—High Water Level" (MODE 6); and
LCO 3.9.5, "Residual Heat Removal (RHR) and Coolant Circulation—Low Water Level" (MODE 6).

ACTIONS

A.1

If only one RCS loop is OPERABLE and two RHR loops are inoperable, redundancy for heat removal is lost. Action must be initiated to restore a second RCS or RHR loop to OPERABLE status. The immediate Completion Time reflects the importance of maintaining the availability of two paths for heat removal.

B.1

If only one RHR loop is OPERABLE and in operation and there are no RCS loops OPERABLE, an inoperable RCS or RHR loop must be restored to OPERABLE status to provide a redundant means for decay heat removal.

If the parameters that are outside the limits cannot be restored, the unit must be brought to MODE 5 within 24 hours. Bringing the unit to MODE 5 is a conservative action with regard to decay heat removal. With only one RHR loop OPERABLE, redundancy for decay heat removal is lost and, in the event of a loss of the remaining RHR loop, it would be safer to initiate that loss from MODE 5 (≤ 200°F) rather than MODE 4 (200 to < 350°F). The Completion Time of 24 hours is a reasonable time, based on operating experience, to reach MODE 5 from MODE 4 in an orderly manner and without challenging plant systems.

BASES

ACTIONS (continued)

C.1 and C.2

If no loop is OPERABLE or in operation, except during conditions permitted by Note 1 in the LCO section, all operations involving a reduction of RCS boron concentration must be suspended and action to restore one RCS or RHR loop to **OPERABLE** status and operation must be initiated. RCP seal injection flow is not considered to be an operation involving a reduction in RCS boron concentration. Boron dilution requires forced circulation for proper mixing, and the margin to criticality must not be reduced in this type of operation. The immediate Completion Times reflect the importance of maintaining operation for decay heat removal. The action to restore must be continued until one loop is restored to OPERABLE status and operation.

SURVEILLANCE REQUIREMENTS

SR 3.4.6.1

This SR requires verification every 12 hours that one RCS or RHR loop is in operation. Verification includes flow rate, temperature, or pump status monitoring, which help ensure that forced flow is providing heat removal. The Frequency of 12 hours is sufficient considering other indications and alarms available to the operator in the control room to monitor RCS and RHR loop performance.

SR 3.4.6.2

SR 3.4.6.2 requires verification of SG OPERABILITY. SG OPERABILITY is verified by ensuring that the secondary side narrow range water level is ≥ 12%. If the SG secondary side narrow range water level is < 12%, the tubes may become uncovered and the associated loop may not be capable of providing the heat sink necessary for removal of decay heat. The 12 hour Frequency is considered adequate in view of other indications available in the control room to alert the operator to the loss of SG level.

SR 3.4.6.3

Verification that the required pump is **OPERABLE** ensures that an additional RCS or RHR pump can be placed in operation, if needed, to maintain decay heat removal and reactor coolant circulation. Verification is performed by verifying proper breaker alignment and power available to the required pump. The Frequency of 7 days is considered reasonable in view of other administrative controls available and has been shown to be

acceptable by operating experience.

BASES

REFERENCES 1. 10 **CFR 50.36,** Technical **Specifications,** (c)(2)(ii).

3.7 PLANT SYSTEMS

3.7.5 Auxiliary Feedwater (AFW) System

LCO 3.7.5 Three AFW trains shall be OPERABLE*.

---NOTE---
Only one AFW train, which includes a motor driven pump, is required to be OPERABLE in MODE 4.

APPLICABILITY: MQDES 1, 2, and 3,
MODE 4 when steam generator is relied upon for heat removal.

ACTIONS

CONDITION	REQUIRED ACTION	COMPLETION TIME
A. One steam supply to turbine driven AFW pump inoperable.	A.1 Restore steam supply to OPERABLE status.	7 days 10 days from discovery of failure to meet the LCO
B. One AFW train inoperable in MODE 1, 2 or 3 for reasons other than Condition A.	B.1 Restore AFW train to OPERABLE status.	72 hours: AND 10 days: from discovery of failure to meet the LCO

(continued)

*For each AFW train on Unit 2, the Completion Time that one AFW train can be inoperable as specified by Required Action A.1 may be extended beyond the "72 hours and 10 days from discovery of failure to meet the LCO" up to 288 hours as part of the NSWS system upgrades. System upgrades include maintenance and modification activities associated with the NSWS piping, valves, and branch lines, necessary repairs and/or replacement, and replacement of portions of the NSWS piping to the AFW system. Upon completion of the cleaning, upgrades, and system restoration in refueling outage 1 EOC12, this footnote is no longer applicable.

ACTIONS (continued)

CONDITION	REQUIRED ACTION	COMPLETION TIME
C. Required Action and associated Completion Time for Condition A or B not met. OR Two AFW trains inoperable in MODE 1, 2, or 3.	C.1 Be in MODE 3. AND C.2 Be in MODE 4.	6 hours 12 hours
D. Three AFW trains inoperable in MODE 1, 2, or 3.	D.1 ----------NOTE---------- LCO 3.0.3 and all other LCO Required Actions requiring MODE changes are suspended until one AFW train is restored to OPERABLE status. ..... Initiate action to restore one AFW train to OPERABLE status.	 Immediately
E. Required AFW train inoperable in MODE 4.	E.1 Initiate action to restore AFW train to OPERABLE status.	Immediately

SURVEILLANCE REQUIREMENTS

SURVEILLANCE		FREQUENCY
SR 3.7.5.1	----------NOTE---------- Not applicable to automatic valves when THERMAL POWER is ≤ 10% RTP. ---------- Verify each AFW manual, power operated, and automatic valve in each water flow path, and in both steam supply flow paths tu the steam turbine driven pump, that is not locked, sealed, or otherwise secured in position, is in the correct position.	31 days
SR 3.7.5.2	----------NOTE---------- Not required to be performed for the turbine driven AFW pump until 24 hours after ≥ 600 psig in the steam generator. Verify the developed head of each AFW pump at the flow test point is greater than or equal to the required deveioped head.	In accordance with the Inservice Besting Program
SR 3.7.5.3	----------NOTE---------- Not applicable in MODE 4 when steam generator is relied upon for heat removal. ---------- Verify each AFW automatic valve that is not locked, sealed, or otherwise secured in position, actuates to the correct position on an actual or simulated actuation signal.	18 months

(continued)

SURVEILLANCE REQUIREMENTS (continued)

SURVEILLANCE		FREQUENCY
SR 3.7.5.4	----------NOTES---------- 1. Not required to be performed for the turbine driven AFW pump until 24 hours after ≥ 600 psig in the steam generator. 2. Not applicable in MODE 4 when steam generator is relied upon for heat removal. ---------- Verify each AFW pump starts automatically on an actual or simulated actuation signal.	18 months
SR 3.7.5.5	Verify proper aiignment of the required AFW flow paths by verifying flow from the condensate storage system to each steam generator.	Prior to entering MODE 2, whenever unit has been in MODE 5 or 6 for > 30 days

B 3.7 PLANT SYSTEMS

B 3.7.5 Auxiliary Feedwater (AFW) System

BASES

BACKGROUND

The AFW System automatically supplies feedwater to the steam generators to remove decay heat from the Reactor Coolant System upon the loss of normal feedwater supply. The AFW pumps take suction through suction lines from the condensate storage system (CSS) (LCO 3.7.6) and pump to the steam generator secondary side. The normal supply of water to the AFW pumps is from the condensate system. The supply valves are open with power removed from the valve operator. The assured source of water to the AFW System is supplied by the Nuclear Service Water System. The turbine and motor driven pump discharge lines to each individual steam generator join into a single line outside containment. These individual lines penetrate the containment and enter each steam generator through the auxiliary feedwater nozzle. The steam generators function as a heat sink for core decay heat. The heat load is dissipated by releasing steam to the atmosphere from the steam generators via the main steam safety valves (MSSVs) (LCO 3.7.1) or SG PORVs (LCO 3.7.4). If the main condenser is available, steam may be released via the steam dump valves and recirculated to the hotwell.

The AFW System consists of two motor driven AFW pumps and one steam turbine driven pump configured into three trains. Each of the motor driven pumps supply 155% of the flow requirements to two steam generators, although each pump has the capability to be realigned to feed other steam generators. The turbine driven pump provides 250% of the flow requirements and supplies water to all four steam generators. Travel stops are set on the steam generator flow control valves such that the pumps can supply the minimum flow required without exceeding the maximum flow allowed. The pumps are equipped with independent recirculation lines to prevent pump operation against a closed system. Each motor driven AFW pump is powered from an independent Class 1E power supply. The steam turbine driven AFW pump receives steam from two main steam lines upstream of the main steam isolation valves. Each of the steam feed lines will suppiy 100% of the requirements of the turbine driven AFW pump.

BASES

BACKGROUND (continued)

The AFW System is capable of supplying feedwater to the steam generators during normal unit startup, shutdown, and hot standby conditions. One turbine driven pump at full flow is sufficient to remove decay heat and cool the unit to residual heat removal (RHR) entry conditions. During unit cooldown, SG pressures and Main Steam pressures decrease simultaneously. Thus, the turbine driven AFW pump with a reduced steam supply pressure remains fully capable of providing flow to all SGs. Thus, the requirement for diversity in motive power sources for the AFW System is met.

The AFW System is designed to supply sufficient water to the steam generator(s) to remove decay heat with steam generator pressure at the iowest setpoint of the MSSVs plus 3% accumulation. Subsequently, the AFW System supplies sufficient water to cool the unit to RHR entry conditions, with steam released through the SG PORVs or MSSVs.

The motor driven AFW pumps actuate automatically on steam generator water level low-low in 1 out of 4 steam generators by the ESFAS (LCO 3.3.2). The motor driven pumps also actuate on loss of offsite power, safety injection, and trip of all MFW pumps. The turbine driven AFW pump actuates automatically on steam generator water level low-low in 2 out of 4 steam generators and on loss of offsite power.

The AFW System is discussed in the UFSAR, Section 10.4.9 (Ref. 1).

APPLICABLE SAFETY ANALYSES

The AFW System mitigates the consequences of any event with loss of normal feedwater.

The design basis of the AFW System is to supply water to the steam generator to remove decay heat and other residual heat by delivering at least the minimum required flow rate to the steam generators at pressures corresponding to the lowest steam generator safety valve set pressure plus 3%.

In addition, the AFW System must supply enough makeup water to replace steam generator secondary inventory lost as the unit cools to MODE 4 conditions. Sufficient AFW flow must also be available to account for flow losses such as pump recirculation valve leakage and line breaks.

The limiting Design Basis Accidents (DBAs) and transients fer the AFW System are as follows:

BASES

APPLICABLE SAFETY ANALYSES (continued)

a. Feedwater Line Break (FWLB); and

b. **Loss** of **MFW.**

In addition, the minimum available AFW flow and system characteristics are Considered in the analysis of a Small break loss of coolant accident (LOCA) and events that could lead to steam generator tube bundle uncovery for dose considerations.

A range of AFW flows is considered for the analyzed accidents, with the Main Steam Line Break being the most limiting for the maximum AFW flowrate.

The AFW System design is such that it can perform its function following a FWLB between the steam generator and the downstream check valve, combined with a loss of offsite power following turbine trip, and a single active failure of the steam turbine driven AFW pump. In such a case, one motor driven AFW pump would deliver to the broken MFW header at the pump runout flow until the problem was detected, and flow terminated by the operator. Sufficient flow would be delivered to the intact steam generators by the redundant AFW pump.

The **ESFAS** automatically actuates the AFW turbine driven pump and associated power operated valves and controls when required to ensure an adequate feedwater supply to the steam generators during loss of offsite power.

The AFW System satisfies the requirements of Criterion 3 of 10 CFR 50.36 (Ref. **2).**

LCO

This LCO provides assurance that the AFW System will perform its design safety function to mitigate the consequences of accidents that could result in overpressurization *of* the reactor coolant pressure boundary. Three independent AFW pumps in three diverse trains are required to be OPERABLE to ensure the availability of RHR capability for all events accompanied by a loss of offsite power and a single failure. This is accomplished by powering *two* of the pumps from independent emergency buses. The third AFW pump is powered by a different means, a steam driven turbine supplied with steam from a source that is not isolated by closure of the MSIVs.

BASES

LCO (continued)

The AFW System is configured into three trains. The AFW System is considered OPERABLE when the components and flow paths required to provide redundant AFW flow to the steam generators are OPERABLE. This requires that the two motor driven AFW pumps be OPERABLE in two diverse paths, each supplying AFW to separate steam generators. The turbine driven AFW pump is required to be OPERABLE with redundant steam supplies from two main steam lines upstream of the MSIVs, and shall be capable of supplying AFW to any of the steam generators. The piping, valves, instrumentation, and controls in the required flow paths also are required to be OPERABLE. The NSWS assured source of water supply is configured into two trains. The turbine driven AFW pump receives NSWS from both trains of NSWS, therefore, the loss of one train of assured source renders only one AFW train inoperable. The remaining NSWS train provides an OPERABLE assured source to the other motor driven pump and the turbine driven pump.

The LCO is modified by a Note indicating that one AFW train, which includes a motor driven pump, is required to be OPERABLE in MODE 4. This is because of the reduced heat removal requirements and short period of time in MODE 4 during which the AFW is required and the insufficient steam available in MODE 4 to power the turbine driven AFW pump.

APPLICABILITY

In MODES 1, 2, and 3, the AFW System is required to be OPERABLE in the event that it is called upon to function when the MFW is lost. In addition, the AFW System is required to supply enough makeup water to replace the steam generator secondary inventory, lost as the unit cools to MODE 4 conditions.

In MODE 4 the AFW System may be used for heat removal via the steam generators.

In MODE 5 or 6, the steam generators are not normally used for heat removal, and the AFW System is not required.

ACTIONS

A.1

If one of the two steam supplies to the turbine driven AFW train is inoperable, action must be taken to restore OPERABLE status within 7 days. The 7 day Completion Time is reasonable, based on the following reasons:

BASES

ACTIONS (continued)

a. The redundant OPERABLE steam supply to the turbine driven AFW pump;

b. The availability of redundant OPERABLE motor driven AFW pumps; and

c. The low probability of an event occurring that requires the inoperable steam supply to the turbine driven AFW pump.

The second Completion Time for Required Action A.1 establishes a limit on the maximum time allowed for any combination of Conditions to be inoperable during any continuous failure to meet this LCO.

The 10 day Completion Time provides a limitation time allowed in this specified Condition after discovery of failure to meet the LCO. This limit is considered reasonable for situations in which Conditions A and B are entered concurrently. The AND connector between 7 days and 10 days dictates that both Completion Times apply simultaneously, and the more restrictive must be met.

B.1

With one of the required AFW trains (pump or flow path) inoperable in MODE 1, 2, or 3 for reasons ether than Condition A, action must be taken to restore OPERABLE status within 72 hours. This Condition includes the loss of two steam supply lines to the turbine driven AFW pump. The 72 hour Completion Time is reasonable, based on redundant capabilities afforded by the AFW System, time needed for repairs, and the low probability of a DBA occurring during this time period.

The second Completion Time for Required Action B.l establishes a limit on the maximum time allowed for any combination of Conditions to be inoperable during any continuous failure to meet this LCO.

The 10 day Completion Time provides a limitation time allowed in this specified Condition after discovery of failure to meet the LCO. This limit is considered reasonable for situations in which Conditions A and B are entered concurrently. The AND connector between 72 hours and 10 days dictates that both Completion Times apply simultaneously, and the more restrictive must be met.

BASES

ACTIONS (continued)

C.1 and C.2

When Required Action A.1 or B.1 cannot be completed withln the required Completion Time, or if two AFW trains are inoperable in MODE 1, 2, or 3, the unit must be placed in a MODE in which the LCO does not apply. *To* achieve this status, the unit must be placed in at least MODE 3 within 6 hours, and in MODE 4 within 12 hours.

The allowed Completion Times are reasonable, based on operating experience, to reach the required unit conditions from full power conditions in an orderly manner and without challenging unit systems.

In MODE 4 with two AFW trains inoperable, operation is allowed to continue because only one motor driven pump AFW train is required in accordance with the Note that modifies the LCO. Although not required, the unit may continue to cool down and initiate RHR.

D.1

If all three AFW trains are inoperable in MODE 1, 2, or 3, the unit is in a seriously degraded condition with no safety related means for conducting a cooldown, and only limited means for conducting a cooldown with nonsafely related equipment. In such a condition, the unit should not be perturbed by any action, including a power change, that might result in a trip. The seriousness of this condition requires that action be started immediateiy to restore one AFW train to OPERABLE status.

Required Action D.1 is modified by a Note indicating that all required MODE changes or power reductions are suspended until one AFW train is restored to OPERABLE status. In this case, LCO 3.0.3 is not applicable because *it* could force the unit into a less safe condition.

E.1

In MODE 4, either the reactor coolant pumps or the RHR loops can be used to provide forced circulation. This is addressed in LCO 3.4.6, "RCS Loops—MODE 4." With one required AFW train inoperable, action must be taken to immediately restore the inoperable train to OPERABLE status. The immediate Completion Time *is* consistent with LCO 3.4.6.

BASES

SURVEILLANCE REQUIREMENTS

SR 3.7.5.1

Verifying the correct alignment for manual, power operated, and automatic valves in the AFW System water and steam supply flow paths provides assurance that the proper flow paths will exist for AFW operation. This SR does not apply to valves that are locked, sealed, or otherwise secured in posltion, since they are verified to be in the correct position prior to locking, sealing, or securing. This SR also does not apply to valves that cannot be inadvertently misaligned, such as check valves. This Surveillance does not require any testing or valve manipulation; rather, it involves verification that those valves capabie of being mispositioned are in the correct position. The SR is **also** modified by a note that excludes automatic valves when THERMAL POWER is ≤ 10% RTP. Some automatic valves may be In a throttled position to support low power operation.

The **31** day Frequency is based on engineering judgment, is consistent with the procedural controls governing valve operation, and ensures correct valve positions.

SR 3.7.5.2

Verifying that each AFW pump's developed head at the flow test point **is** greater than or equal to the required developed head ensures that AFW pump performance has not degraded during the cycle. Flow and differential head are normal tests *of* centrifugal pump performance required by Section **XI** of the ASME Code (Ref. 3). Because it **is** undesirable to introduce cold AFW into the steam generators while they are operating, this testing is performed on recirculation flow. This test confirms one point on the pump design curve and is indicative of overall performance. Such inservice tests confirm component OPERABILITY. trend performance, and detect incipient failures by indicating abnormal performance. Performance of Inservice testing discussed in the ASME Code, Section XI (Ref. 3) (only required at 3 month intervals) satisfies this requirement.

This SR is modified by a Note indicating that the SR should be deferred until suitable test conditions are established. This deferral is required because there *is* insufficient steam pressure to perform the test.

BASES

SURVEILLANCE REQUIREMENTS (continued)

SR 3.7.5.3

Phis SR verifies that AFW can be delivered to the appropriate steam generator in the event of any accident or transient that generates an ESFAS, by demonstrating that each automatic valve in the flow path actuates to its correct position on an actual or simulated actuation signal. This Surveillance is not required for valves that are locked, sealed, or othewise secured in the required position under administrative controls. The 18 month Frequency is based on the need to perform this Surveillance under the conditions that apply during a unit outage and the potential for an unplanned transient if the Surveillance were performed with the reactor at power. The 18 month Frequency is acceptable based on operating experience and the design reliability of the equipment.

Phis SR is modified by a Note that states the SR is not required in MODE 4. In MODE 4, the required AFW train may already be aligned and operating.

SR 3.7.5.4

This SR verifies that the AFW pumps will start in the event of any accident or transient that generates an ESFAS by demonstrating that each AFW pump starts automatically on an actual or simulated actuation signal in MODES 1, 2, and 3. In MODE 4, the required pump may already be operating and the autostart function is not required. The 18 month Frequency is based on the need to perform this Surveillance under the conditions that apply during a unit outage and the potential for an unplanned transient if the Surveillance were performed with the reactor at power.

This SR is modified by two Notes. Note 1 indicates that the SR can be deferred until suitable test conditions are established. This deferral is required because there is insufficient steam pressure to perform the test. Note 2 states that the SR is not required in MODE 4. In MODE 4, the required pump may already be operating and the autostart function is not required. In MODE 4, the heat removal requirements would be less providing more time for operator action to manually start the required AFW pump if It were not in operation.

BASES

SURVEILLANCE REQUIREMENTS (continued)

SR 3.7.5.5

This ***SR*** verifies that the AFW is properly aligned by verifying the flow paths from the CSS to each steam generator prior to entering MODE 2 after more than 30 days in MODE 5 or 6. OPERABILITY of AFW flow paths must be verified before sufficient core heat is generated that would require the operation *of* the AFW System during a subsequent shutdown. The Frequency is reasonable, based on engineering judgement and other administrative controls that ensure that flow paths remain OPERABLE. To further ensure AFW System alignment, flow path OPERABILITY is verified following extended outages to determine ne misalignment of valves has occurred. This SR ensures that **the** flow path from the CSS to the steam generators is properly aligned.

REFERENCES

1. UFSAR, Section 10.4.9.

2. 10 CFR 50.36, Technicai Specifications, (c)(2)(ii).

3. ASME, Boiler and Pressure Vessel Code, Section XI.

3.7 PLANT SYSTEMS

3.7.7 Component Cooling Water (CCW) System

LCO 3.7.7 Two CCW trains shall be OPERABLE*

APPLICABILITY: MODES 1, 2, 3, and 4

ACTIONS

CONDITION	REQUIRED ACTION	COMPLETION TIME
A. One CCW train inoperable.	A.1 ----------NOTE---------- Enter applicable Conditions and Required Actions of LCO 3.4.6, "RCS LOOPS—MODE 4," for residual heat removal loops made inoperable by CCW. ---------- Restore CCW train to OPERABLE status.	72 hours
B. Required Action and associated Completion Time of Condition A not met.	B.1 Be in MODE 3. AND B.2 Be in MODE 5.	6 hours 36 hours

*For each CCW train on Unit 2, the Completion Time that one CCW train can be inoperable as specified by Required Action A.1 may be extended beyond the 72 hours up to 288 hours as part of the NSWS system upgrades. System upgrades include maintenance and modification activities associated with the NSWS piping, valves, and branch lines, necessary repairs and/or replacement, and replacement of portions of the NSWS piping to the AFW system. Upon completion of the cleaning, upgrades, and system restoration in refueling outage 1 EOC12, this footnote is no longer applicable.

B 3.7 PLANT SYSTEMS

B 3.7.7 Component Cooling Water (CCW) System

BASES

BACKGROUND

The CCW System provides a heat sink for the removal of process and operating heat from safety related components during a Design Basis Accident (DBA) or transient. During normal operation, the CCW System also provides this function for various nonessential components, as well as the spent fuel storage pool. The CCW System serves as a barrier to the release of radioactive byproducts between potentially radioactive systems and the Nuclear Service Water System (NSWS), and thus to the environment.

The CCW System is arranged as two independent, full capacity cooling loops, and has isolatable nonsafety related components. Each safety related train includes two 50% capacity pumps, surge tank, heat exchanger, piping, valves: and instrumentation. Each safety related train is powered from a separate bus. An open surge tank in the system provides sufficient inventory to protect the pumps from a lack of net positive suction head available (NPSHA) due to a moderate energy line break. The pumps have sufficient NPSHA with the surge tank empty provided the piping up to the tank is filled. The pumps on each train are automatically started on receipt of a safety injection signal, and all nonessential components are isolated.

Additional information on the design and operation of the system, along with a list of the components served, is presented in the UFSAR, Section 9.2 (Ref. 1). The principal safety related function of the CCW System is the removal of decay heat from the reactor via the Residual Heat Removal (RHW) System. This may be during a normal or post accident cooldown and shutdown.

APPLICABLE SAFETY ANALYSES

The safety related design basis function of the CCW System is to remove waste heat from various components essential in mitigating design basis events which require Emergency Core Cooling System (ECCS) operation. The CCW System is also used to support normal operation. The normal temperature of the CCW is 90°F, and, during unit cooldown to MODE 5 (T_{cold} < 200°F), a maximum temperature of 120°F is

BASES

APPLICABLE SAFETY ANALYSES (continued)

assumed (Ref. 1). This 120°F limit is to prevent thermal degradation of the large pump motors supplied with cooling water from the CCW System.

The CCW System is designed to perform its function with a single failure of any active component, assuming a **loss db** offsite power.

The CCW System also functions *to* cool the unit from RHR entry conditions (T_{cold} < 350°F), to **MODE** 5 (T_{cold} < 200°F), during normal and **post** accident operations. The time required *to* cool from 350°F to 200°F is a function of the number of CCW and RHR trains operating. One CCW train is sufficient to remove decay heat during subsequent operations with T_{cold} < 200°F. This assumes ***a*** maximum service water temperature of 100°F occurring simultaneously with the maximum heat loads on the system.

The CCW System satisfies Criterion 3 of 10 CFR 50.36 (Ref. 2).

LCO

The CCW trains are independent of each other to the degree that each has separate controls and power supplies and the operation of one does not depend on the other. In the event of a DBA, one CCW train *is* required ***to*** provide the minimum heat removal capability assumed in the safety analysis for the systems to which it supplies cooling water. To ensure this requirement is met, two trains **of** CCW must be OPERABLE. At least one CCW train will operate assuming the worst case single active failure occurs coincident with a loss *of* offsite power.

A CCW train is considered OPERABLE when:

a. Both pumps and associated surge tank are OPERABLE; and

b. The associated piping, valves, heat exchanger, and instrumentation and controls required to perform the safety related function are OPERABLE.

The isolation of CCW from other components or systems not required for safety may render those components or systems inopsrable but does not affect the OPERABILITY of the CCW System.

BASES

APPLICABILITY

In MODES 1, 2, 3, and 4, the CCW System is a normally operating system, which must be prepared to perform its post accident safety functions, primarily RCS heat removal, which is achieved by cooling the RHR heat exchanger.

in MODE 5 or 6, the requirements of the CCW System are determined by the systems it supports.

ACTIONS

A.1

Required Action A.l is modified by a Note indicating that the applicable Conditions and Required Actions of LCO 3.4.6, "RCS Loops—MODE 4," be entered if an inoperable CCW train results in an inoperable RHR loop. This is an exception to LCO 3.0.6 and ensures the proper actions are taken for these components.

If one CCW train is inoperable, action must be taken to restore OPERABLE status within 72 hours. In this Condition, the remaining OPERABLE CCW train is adequate to perform the heat removal function. The 72 hour Completion Time is reasonable, based on the redundant capabilities afforded by the OPERABLE train, and the low probability of a DBA occurring during this period.

B.1 and B.2

If the CCW train cannot be restored to OPERABLE status within the associated Completion Time, the unit must be placed in a MODE in which the LCO does not apply. To achieve this status, the unit must be placed in at least MODE 3 within 6 hours and in MODE 5 within 36 hours. The allowed Completion Times are reasonable, based an operating experience, to reach the required unit conditions from full power conditions in an orderly manner and without challenging unit systems.

SURVEILLANCE REQUIREMENTS

SR 3.7.7.1

This SR is modified by a Note indicating that the isolation of the CCW flow to individual components may render those components inoperable but does not affect the OPERABILITY of the CCW System.

Verifying the correct alignment for manual, power operated, and automatic valves in the CCW flow path to safety related equipment provides assurance that the proper flow paths exist for CCW operation.

BASES

SURVEILLANCE REQUIREMENTS (continued)

This SR does not apply to valves that are locked, sealed, or otherwise secured in position, since these valves are verified to be in the correct position prior to iocking, sealing, or securing. This SR also does not apply to valves that cannot be inadvertently misaligned, such as check valves. This Surveillance does not require any testing or valve manipulation; rather, it involves verification that those valves capabie of being mispositioned are in the correct position.

The 31 day Frequency is based on engineering judgment, is consistent with the procedural controls governing valve operation, and ensures correct valve positions.

SR 3.7.7.2

This SR verifies proper automatic operation of the CCW valves on an actual or simulated actuation safety injection, Phase 'A' isolation, or Phase 'B' Isolation signal. The CCW System is a normally operating system that cannot be fully actuated as part of routine testing during normal operation. This Surveillance is not required for valves that are locked, sealed. or othewise secured in the required position under administrative controls. The 18 month Frequency is based on the need to perform this Surveillance under the conditions that apply during a unit outage and the potential for an unplanned transient if the Surveillance were performed with the reactor at power. Operating experience has shown that these components usually pass the Surveillance when performed at the 18 month Frequency. Therefore, the Frequency is acceptable from a reliability standpoint.

SR 3.7.7.3

Phis SR verifies proper automatic operation of the CCW pumps on an actual or simulated actuation signal. The CCW System is a normally operating system that cannot be fully actuated as part of routine testing during normal operation. The 48 month Frequency is based on the need to perform this Surveillance under the conditions that apply during a unit outage and the potential for an unplanned transient if the Surveillance were performed with the reactor at power. Operating experience has shown that these components usually pass the Surveillance when performed at the 18 month Frequency. Therefore, the Frequency is acceptable from a reliability standpoint.

BASES

REFERENCES

1. **UFSAR,** Section 9.2.

2. 10 CFW 50.36, Technical Specifications, (c)(2)(ii).

MODIFIED: McGUIRE NRC EXAM 2002

Bank Question: 936 **Answer: A**

1Pt(s) Unit 1 is shutting down, in mode 4. Engineering reported that a recent test on the 1B KC heat exchanger showed that fouling had reduced its heat transfer capability below the minimum design value. Given the following events and conditions:

- NCS temperature is 260 °F.
- ND loops **A** and B are operating.
- CAPT is tagged **for** maintenance.
- **CA** pump 1B and **CA** pump 1A are isolated **for** differential pressure testing.
- The plant is expected to remain in mode **4** for another 7 days.

What is the EARLIEST action required for the operators to take?

REFERENCES PROVIDED: Tech Spec's 3.4.6, 3.7.6

A. Be in mode **5** within **24** hours.

B. Return at least one CA pump to operable status within **72** hours.

C. Clean the 1B KC heat exchanger within **72** hours or be in mode **5** within **36** hours.

D. Clean the 1B KC heat exchanger within **72** hours or be **in** mode **5** within **42** hours.

Distracter Analysis:

A. Correct answer: TS 3.7.6 cascades to TS 3.4.6 (see note).

B. Incorrect: Any action on the **CA** system would have immediate response required.
Plausible: Restoring a CA pump could resolve the TS **3.4.6** action but not the TS 3.7.6 action.

C. Incorrect: must be in mode **5** within 24 hours.
Plausible: This is the correct answer **for** TS 3.7.6, disregarding the cascading note.

D. Incorrect: must be in mode 5 within 24 hours.
Plausible: if the candidate adds the time allowed to reach mode **3** to the mode 5 action time in TS 3.7.6.

Level: RO Only

KA: ADM G 2.2.22 (3.5 / 4.1)

Lesson Plan Objective: PSS-KC SEQ 15

Source: New

Level of knowledge: comprehension

References:
1. Tech Spec's **3.4.6 and** 3.7.6 - PROVIDED

Bank Question: 718 **Answer: B**

I Pt(s) Unit 2 is conducting a plant shutdown from 100% power. Given the following events and conditions:

- Reactor power is 6%
- **All** manual actions have been taken as required in the procedures
- Intermediate Range channel N-36 fails HIGH.

Which of the following statements correctly describes how this failure affects the reactor shutdown and subsequent operation **of** the Nuclear Instrumentation System?

A. The reactor **will** trip; the source range detectors will reenergize when **N-35** decreases to the proper setpoint.

B. The reactor **will** trip; the source range detectors **will** have to be manually reenergized.

C. The reactor will not trip; the source ranges **will** reenergize when **N-35** decreases to the proper setpoint.

D. The reactor will not trip; the source ranges will have to be manually reenergized.

Distracter Analysis:

A. Incorrect: **The** source range instruments will not automatically reenergize
Plausible: If the operator believes the remaining IR energizes the Source Ranges, but knows the reactor trips.

B. Correct: The IR trip will occur when either IR channel increases to > 25% equivalent. However this trip is blocked manually when **P-10** is satisfied. Since reactor power is given as 6%, when N-36 fails high, the IR high **flux** trip will occur.
The Source Range instruments will automatically reenergize when:
1. P-10 is not satisfied, 3/4 NIS PR < 10% and
2. P-6, both IR < 10^{-10} amps

Otherwise they will need to be MANUALLY reenergized. With a high failure of IR **N-36,** they will not automatically reenergize.

C. Incorrect The reactor will trip and the source range instruments will not automatically reenergize
Plausible: Operator believes the IR trip is blocked and only one IR is necessary **to** energize the SR

D. **Incorrect:** The reactor will trip and the source range instruments will not automatically reenergize
Plausible: Operator believes the IR trip is blocked hut knows both IR are necessary to energize the SR.

Level: SRO Only 10CFR55.43(b)5

KA: APE **033** AA2.08 (3.3/3.4)

Lesson Plan Objective: ENB Obj: 9

Source: **bank**

Level of knowledge: analysis

References:
1. OP-CN-IC-ENB page 10, 11, 12, 13

OBJECTIVES

	Objective	ISS	NLO	LPRO	LPSO	PTRQ
1	State the purpose of the ENB system.			X	X	
2	Describe the principle of operation of each detector used.			X	X	
3	Describe the overlap provided between each range.			X	X	X
4	Describe the function of each output from each range of nuclear instrumentation.			X	X	X
5	Explain the function of each portion of the individual ranges when given a block diagram of each range.			X	X	X
6	Explain the function of all indications and controls associated with ENB.			X	X	X
7	Describe the "Gamma Compensation" used by each range.			X	X	X
8	Describe the effects of "over" and "under" compensation in the Intermediate Range.			X	X	X
9	Describe the plant response to a given detector or instrument failure.			X	X	X
10	Given a set of specific plant conditions and access to reference materials, determine the actions necessary to comply with Tech Specs/SLCs.			X	X	X
11	List the symptoms as given for each case in AP/1/A/5500/16, Malfunction of Nuclear Instrumentation.			X	X	
12	FROM MEMORY state the Immediate Actions as required by AP/1/A/5500/16, Malfunction of Nuclear Instrumentation.			X	X	X
13	Describe the source range instrumentation response for voiding in the core/downcomer region of the core and for core uncovery.			X	X	X
14	State from memory all Tech Spec actions for the applicable system, subsystem and components, which require remedial action to be taken in less than 1 hour.			X	X	

15. Level Adjust Potentiometer - Adjustable test signal into level amp. Enables adjustment of the trip level of s l

16. High Flux at Shutdown Switch - T\ position switch.

    a) N(ı -allows circuit to provide 'High Flux at hı and "Containment Evacuation' ε ı(setpoint is exceeded.

    b) Block-used ɪı ɪ - Blocks High Flux at Sh c ı ɔ ıd t Evacuation Alarm.

    c) With tl Coritrol Power fuses ıl or removed the containment evacuation alarm will alarm and cannot be .OCKED The OFF switch on the main control board must be depressed and held until the fuses c be d or ɜin ɪ

E. Source Range ıl

1. During ɪ startup as powei increases into the Intermediate ıg and increases above 10^{-10} amps (1 out of 2 channels) ɜl P-6 is energized automatically. This permissive allows the operator to block the SR High lux l Trip (10^5 cps increasing).

2. When reactor power is reduced to less than 6 the SR detectors are automatically i and the SR tiigh Flux F Trip is placed back in service for both channels.

3. ɜn ıa tor p is increased r than 1 (2) F F s greater than reactor power) the SR detector power i further assured to be by blocking voltage to the source detectors. This blocking of the voltage to the source range detectors is automatically removed when reactor power is ɜ ıl the P-10 setpoint ɪ P-10 is ɜ ɪ F (not energize ıl due to ɪ out of 4 PR chanr ɜ P- bistables ıt ıg the 2 t of 4 'and' t not p to the \ 10' state) then the SR detectors can not be re ıl either automatically or manually. IAE intervention is required should this ɜ ır.

F. Intermediate Range Detector (2)

1. ɜtector - Comper sat Ion Cl - (gamma compensation required only below 10^{-9} ps).

    a) wo Volume Detector

        1) Outer volume Boron lined, sensitive to neutrons and mr ɜ

        2) Inner volume s only to gamma - not ɔn lined

        3) Each volume generates current output.

    b) Inner volume current due to gamma interactions with N_2 gas.

    c) Outer volume current generated ı utr interactions with Boron 10 lining and gamma ɜractions with I_2 gas

IR - COMPENSATED ION CHAMBER

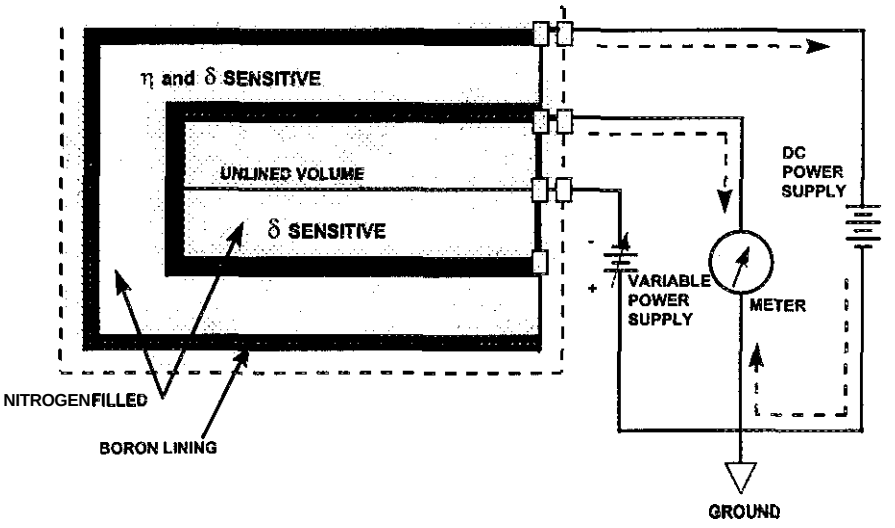

d) A high DC voltage is applied to the detector to provide for the collection of all charged particles for each ionizing event. A voltage in opposition to this voltage is applied to the compensation electrode. Compensation is necessary because after sustained full power operation of the reactor, there is an appreciable amount of residual gamma flux. The compensation voltage is adjusted to cancel out the signal due to gamma flux leaving an output from the detector which is proportional to neutron flux only. Due to the high rate of neutron pulses detected in the Intermediate Range the output from the compensated ion chamber detector is direct current, and is coupled directly to log current amplifies. (Obj. #7)

2. Under Compensation (OBJ #8)

   a) Higher power indication than actual'power level.

   b) Can result in attaining an extremely high SUR without seeing it on SUR meters.

   c) Can possibly prevent P-6 clearing and prevent automatic re-energizing of SR detectors following a Reactor Trip.

   d) Will energize P-6 earlier than expected during Reactor startup.

3. Over compensation (OBJ #8)

   a) indicated power lower than true power, possibly pegged low.

   b) Indicates a much higher SUR than actual SUR.

   c) Will clear P-6 at higher actual flux level than normal.

G. Intermediate Range Channels (IR) N35 and N36 (OBJ #5)

INTERMEDIATE RANGE

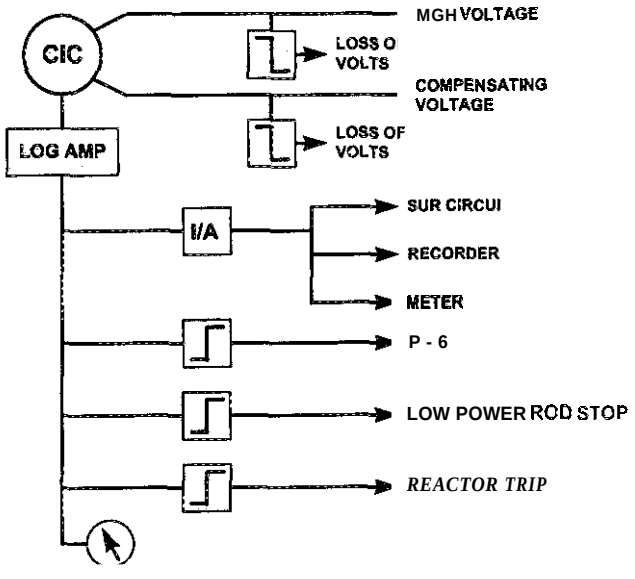

1. Range of indication 10^{-11} to 10^{-3} amps. (Startup to full power.)
2. Bistable Circuits
   a) P-6 (1/2 IR greater than 10^{-10} amps) - allows the operator to block the SR High bevel Reactor Trip.
   b) bow Power Rod Stop (amps equivalent to 20% power) - prevents any outward rod motion.
   e) Reactor Trip (amps equivalent to 25% power).
3. Isolation Amp Feeds:
   a) SUR Circuit
   b) C/B Recorder – N/R 45
   c) C/B Meter
4. Local Meter - On IR Panel Drawer

H. IR Circuits Outputs (OBJ #4)

1. Loa Level Amplifier
   a) Receives DC signal from detector.
   b) Provides logarithm voltage output proportional to linear input current.
   c) Output voltage to:
      1) C/B and local meter calibrated in amps (10^{-11} to 10^{-3} Amps)

2) Isolation Amp
3) Bistable Relay Drivers

2. Bistable Relay Drivers
   a) P-6 (1/2 IR greater than 10^{-10} amps)
   b) bow Power Rod Stop
      1) Current equivalent to 20% full power (1/2 channels).
      2) Rod withdrawal stop in manual or automatic.
      3) Blockable at P-10 (2/4 PR greater than 10% power).
   c) Reactor Trip
      1) Current equivalent to 25% full power (1/2 channels)
      2) Blockable at P-10
3. Isolation Amplifier
   a) isolates IR channel from remote equipment.
   b) Provides output for following:
      1) SUR Circuit
         (a) Converts rate of change of power level to SUR in DPM.
         (b) Reads out on C/B.
      2) C/B Indication - Meter calibrated in amps (10^{-11} to 10^{-3}).
      3) C/B Recorder
         (a) 1NR-45 two pen recorder.
         (b) Records IR level in amps when selected.

I. IR Drawer Panel (OBJ #6)
   1. Ampere Neutron Level Meter
      a) Indicates current output of detector
      b) Indicates in amps - Eight decades (10^{-11} to 10^{-3} amps)
   2. Instrument Power "ON" Lamp -- 118 voits AC instrument power applied to drawer.
   3. Control Power "ON" Lame -- 118 volts AC control power applied to driver assembly controi circuits.
   4. Channel On Test Lamp - Indicates OPERATION SELECTOR switch is in a position other than "NORMAL".

Bank Question: 502.1 ***Answer: A***

1 Pt(s) **A** LOCA occurred on Unit 1 at 2:00 AM. Given the following events and conditions:

0201 **A** containment air release was in progress and was immediately terminated.
0205 The control room operators are responding to the events in E-1.
0210 The OSM has assumed the role of the Emergency Coordinator,
0215 **A** Site **Area** Emergency is declared
0230 Completed initial notification of the **State** and Local authorities for declaration of a site area emergency
0240 The OSM notes the following plant conditions **and** determines the appropriate classification for the following indications:

- Containment pressure indicates 18 psig
- Containment Hydrogen concentration is 1.5%
- Containment valve VQ-2B failed to isolate on phase **A** signal.
- Core exit T/Cs indicate temperatures of 1300°F
- RVLIS lower range level indicates 90%
- 1EMF-53A/B indicate 85 R/hr
- The Operators enter FR-C.1 ***(Response to Loss of Core Cooling)***

If the OSM determines the appropriate classification when the conditions are first indicated (do not assume it takes 15 minutes for the OSM to classify the events), which one of the following statements correctly describes the **first** notification that is required?

REFERENCES PROVIDED: RP/0/A/5000/01 (Classification of Emergency)

A. Notify the State and Local authorities that the plant has declared a general emergency no Later than **0255.**

B. Notify the NRC Headquarters Operations Center of plant conditions no later than 0300.

C. Notify the State and Local authorities that the plant has declared a general emergency no later than 0310.

D. Provide the first follow-up notification for a site area emergency to the State and Local authorities no later than 0315.

Distracter Analysis: Comparison to RP/0/A/5000/001 EALS shows:
- Cladding – 5 pts – T/Cs > 1200 °F = core cooling red path (*note:* however, EMF-53A/B do not meet criteria for clad failure – must be >117 R/hr)

- NC integrity – 5 pts – LOCA has occurred
- Containment integrity – 1 point for potential loss
  - 18 psig – criteria is 15 psig for potential loss - YES
  - 1.5% H2 – criteria is 9% H2 far potential loss - NO
  - In FR-C.1 Red Path for 15 minutes – Not until 0255

The OSM meets the criteria for a GE at **0240**

A. **Correct:** Meets criteria for a GE at **0240** .The OSM has 15 minutes to notify the State and Local Authorities – must be completed by 0255.

B. **Incorrect:** NRC is required to be notified within one hour of the declaration of an emergency classification (event time), no Later than 0315 – not from when the event first occurs.
Plausible: Notification of NRC is a high priority communication. If the candidate thinks that NRC notification must occur within 1 hour of the time that the **LOCA** occurred at 0200.

B. **Incorrect:** The events are classified at the General Emergency level at **0240.** The OSM has 15 minutes to notify the State and Local Authorities – must be completed by 0255.
Plausible: The core cooling red path must be in for 15 minutes if the escalation to GE is made on the basis of the core cooling red path – this would be correct if the candidate does not recognize that the high containment pressure is sufficient to declare a GE at **0240.**

D. **Incorrect:** Follow-up reports for lesser classifications are not made
Plausible: One hour from notification of State and Local authorities for the SAE – this is correct if the candidate does not recognize the classification of the general emergency.

Level: SRO Only 10CFR55.43(b)5

KA: APE WE03 G4.30 (2.2/3.6)

Lesson Plan Objective: SEP Obj: 2, 16

Source: Mod Ques_502, Ques_109

Level of knowledge: comprehension

References:
1. OP-CN-EP-SEP pages 11 & 12
2. RP/0/A/5000/001 page 1-3
3. RP/0/A/5000/001 Encl 4.1 pages 1-5
4. RP/0/B/5000/013 Encl 4.1 page 2

	Objective	ISS	LPRO	LPSO	PTRQ
1	List the four levels of emergency classification at Catawba Nuclear Station.	X	X	X	X
2	When given a set of plant conditions and access to reference materials, correctly classify an event using RP/0/A/5000/001.			X	X
3	Explain personnel responsibilities during an emergency at Catawba Nuclear Station. • List the persons (by title) who may assume the role of emergency coordinator. • State who is responsible for activation of the emergency warning system (sirens). • State who is responsible for making recommendations to offsite agencies. • State your assembly point.	X	X	X	X
4	State the emergency levels that require various actions to be taken. • OSC activation. • TSC activation • EOF activation • Site Assembly • Mandatory site evacuation	X	X	X	X
5	Name the locations for emergency evacuation sites.	X	X	X	X
6	Explain how to determine which emergency evacuation site to use in case of an emergency.		X	X	X
7	List the offsite agencies which should be notified during an emergency.	X	X	X	X
8	Explain the meaning of emergency sirens sounding.	X	X	X	X
9	State the size of the Emergency Planning Zone (EPZ).		X	X	X
10	Describe how to conduct site assembly/evacuation according to RP/0/A/5000/010 and NSD 114.			X	X

	Objective	ISS	LPRO	LPSO	PTRQ
11	Describe the symptoms that may or will require a site assembly or evacuation per RP/0/A/5000/010 and NSD 114.			X	
12	Describe the procedure for securing from a site assembly or evacuation.			X	
13	Explain the purpose of the NSD for Site Assembly/Evacuation per NSD 114.			X	
14	Describe the procedure for site assembly during the following per NSD 114: • inability to reach assembly point • working in RCA			X	
15	Summarize the procedure for site assembly per NSD 114 including: • who may enter the plant during a site assembly • the procedure lo account for personnel			X	
16	State the time frames in which immediate and follow-up notifications are to be made to various offsite agencies.			X	X
17	Prepare and evaluate Emergency Notification Forms for both initial and follow-up notification for any given accident scenario.			X	X
18	When given a copy of RP/0/A/5000/002, apply the Immediate Actions required for a Notification of Unusual Event.			X	X
19	Summarize the subsequent actions required for the Notification of Unusual Event procedure per RP/0/A/5000/002: • Describe the procedure to terminate the emergency. • Describe the procedure to give a follow-up message. 1. For events lasting greater than one hour. 2. Significant change in the situation. 3. Escalation to a higher classification.			X	X
20	When given a copy of RP/0/A/5000/003, apply the Immediate Actions required for an Alert.			X	X

4. Immediate Actions During an Emergency

a) Compare actual plant conditions to the Emergency Action Level(s) listed in Enc. 4.1, RP/0/A/5000/001, then declare the appropriate Emergency Class. (Obj. #2)

NOTE: Using the appropriate forms, have students classify an event and fill out an Emergency Notification Form (ENF). (Obj. # 2) (Obj. #17)

b) Make notifications to state and county agencies within 15 minutes of declaring the event. Notify the NRC immediately after the states and counties, not to exceed 1 hour. Notify all others as soon as possible after the states, counties, and NRC are notified. (Obj. #16) (Obj. #7)

1) NC and SC

2) York, Gaston, Mecklenburg counties

3) NRC (ENS phone)

c) Refer to the applicable Emergency Response Procedure (RP) for the classification found in Enc. 4.1, RP/0/A/5000/001:

Notification of Unusual Event, RP/0/A/5000/002 (Obj. 18)

Alert, RP/0/A/5000/003 (Obj. 28)

Site Area Emergency, RP/0/A/5000/004 (Obj. 22)

General Emergency, RP/0/A/5000/005 (Obj. 24)

d) In the event of an "Urgent Condition" problem that has radiological implications, but does not require EP/RP implementation, Radiation Protection Shift Supervisor shall be contacted to respond with Protective clothing and equipment to accommodate 1 RP Technician and 3 workers in an "Urgent Response Kit".

5. Subsequent Actions Durina an Emergency

a) Refer to the applicable Emergency Response Procedure (RP) for the classification:

1) Notification of Unusual Event, RP/0/A/5000/002 (Obj. 19)

2) Alert, RP/0/A/5000/003 (Obj. 21)

3) Site Area Emergency, RP/0/A/5000/004 (Obj. 23)

4) General Emergency, RP/0/A/5000/005 (Obj. 25)

b) Make follow-up notifications to states and counties (Obj. 16), (Obj. 26)

Refer to the most recent revision of RP/0/A/5500/006A and B.

2) Notification of Unusual Event, Alert, Site/Area Emergency and General Emergency

(a) Hourly until emergency closed out

or

(b) If any significant change in situation

or

(c) As agreed upon with each agency (not to exceed 4 hours).

c) Assess plant conditions to determine the need to change emergency classifications:(Obj. 27)

1) Raise classification by declaration of Alert, Site Area or General Emergency. Make initial notification within 15 minutes of declaration.

2) Lower classification by declaration of an Alert or NOUE per Encl. 4.3 of RP/0/A/5000/004, Site Area Emergency or RP/0/A/5000/003, Alert respectively. Make initial notification within 15 minutes of declaration.

3) Termination of an emergency varies with the classification from which the emergency is being terminated. Refer to RP/0/A/5000/002 through 006A.

d) Brief plant personnel as to status of the emergency via the plant page.

e) Make Protective Action recommendations to states and counties, as appropriate.

f) Ensure emergency worker doses do not exceed the limits of RP/0/A/5000/018, Emergency Worker Dose Extension, as appropriate.

g) Provide turnover to the TSC Emergency Coordinator, as appropriate.

C. Personnel Responsibilities (Obj. #3)

1. Initially the OPS Shift Manager is the individual who assumes the role of Emergency Coordinator.

2. Subsequently the Station Manager or his designee will assume the role of Emergency Coordinator. After EOF activation, the EOF Director is responsible for overall emergency management.

Duke Power **Company** Catawba Nuclear Station **Classification of Emergency** **Multiple Use**	**Procedure** No. **RP/0/A/5000/001** Revision No. **015** Electronic Reference No. CN005GNK

PERFORMANCE

* * * * * * * * * * UNCONTROLLED FOR PRINT * * * * * * * * * *

(ISSUED) - PDF Format

Classification of Emergency

1. Symptoms

1.1 Notification of Unusual Event

1.1.1 Events are in process or have occurred which indicate a potential degradation of the level of safety of the plant.

1.1.2 No releases of radioactive material requiring offsite response or monitoring are expected unless further degradation of safety occurs.

1.2 Alert

1.2.1 Events are in process or have occurred which involve an actual or potential substantial degradation of the level of safety of the plant.

1.2.2 Any releases are expected to be limited to small fractions of the EPA Protective Action Guideline exposure levels.

1.3 Site Area Emergency

1.3.1 Events are in process or have occurred which involve actual or likely major failures of plant functions needed for protection of the public.

1.3.2 Any releases are not expected to exceed EPA Protective Action Guideline exposure levels except near the site boundary.

1.4 General Emergency

1.4.1 Events are in process or have occurred which involve actual or imminent substantial core degradation or melting with potential for loss of containment integrity.

1.4.2 Releases can be reasonably expected to exceed EPA Protective Action Guidelines exposure levels offsite for more than the immediate site area.

2. Immediate Actions

2.1 Determine operating mode that existed at the time the event occurred prior to any protection system or operator action initiated in response of the event.

2.2 **IF** the plant was in Mode 1-4 and a valid condition affects fission product barriers, proceed to Enclosure 4.1.

_____ 2.3 IE a General Emergency is **NOT** declared in Step 2.2 **OR** the condition does not affect fission product barriers, review the listing of enclosures to determine if the event is applicable to one the categories shown.

_____ 2.4 Compare actual plant conditions to the Emergency Action Levels listed, then declare the appropriate Emergency Class as indicated.

_____ 2.5 Implement the applicable Emergency Response Procedure (RP) for that classification and continue with subsequent steps of this procedure.

Notification of Unusual Event	RP/0/A/5000/002
Alert	RP/0/A/5000/003
Site Area Emergency	RP/0/A/5000/004
General Emergency	RP/0/A/5000/005

3. Subsequent Actions

_____ 3.1 To escalate, de-escalate, or terminate the Emergency, compare plant conditions to the Initiating Conditions of Enclosures 4.1 through 4.7.

_____ **3.2** Refer to enclosure 4.9, Emergency Declaration Guidelines, as needed.

4. Enclosures

4.1 Fission Product Barrier Matrix
4.2 System Malfunctions
4.3 Abnormal Rad Levels/Radiological Effluent
4.4 Loss of Shutdown Functions
4.5 Loss of Power
4.6 Fires/Explosions and Security Events
4.7 Natural Disasters, Hazards and Other conditions Affecting Plant Safety
4.8 Definitions/Acronyms
4.9 Emergency Declaration Guidelines
4.10 Radiation Monitor Reading for Enclosure 4.3 EALs

Enclosure 4.1

Fission Barrier Matrix

Use EALs to determine Fission Product Barrier status (Intact, Potential Loss, or Loss). Add points for all 3 barriers. Classify according to the table below.

Note 1: This table is only applicable in Modes 1-4

Note 2: Also, an event (or multiple events) could occur which results in the conclusion that exceeding the Loss or Potential. Loss thresholds is IMMINENT (i.e., within 1-3 hours). In this IMMINENT LOSS situation, use judgement and classify as if the thresholds are exceeded.

Note 3: When determining Fission Product Barrier status, the Fuel. Clad Barrier should be considered to be lost or potentially lost if the conditions for the Fuel Clad Barrier loss or potential loss EALs were met previously during the event, even if the conditions do not currently exist.

Note 4: Critical Safety Function (CSF) indications are not meant to include transient alarm conditions which may appear during the start-up of engineered safeguards equipment. A CSF condition is satisfied when the alarmed state is valid and sustained. The STA should be consulted to affirm that a CSF has been validated and the appropriate functional restoration procedure has been implemented prior to the CSF being used as a basis to classify an emergency.

EAL #	Unusual Event	EAL #	Alert	EAL #	Site Area Emergency	EAL #	General Emergency
4.1.U.1	Potential Loss of Containment	4.1.A.1	Loss OR Potential Loss of Nuclear Coolant System	4.1.S.1	Loss OR Potential Loss of Both Nuclear Coolant System Fuel Clad	1.1.G.1	Loss of All Three Barriers
4.1.U.2	Loss of Containment	4.1.A.2	Loss OR Potential Loss of Fuel Clad	4.1.S.2	Loss Potential Loss Combinations of Both Nuclear Coolant System AND Fuel Clad	4.1.G.2	Loss of Any Two Barriers AND Potential Loss of the Third
		4.1.A.3	Potential Loss of Containment AND Loss OR Potential Loss of Any Other Barrier	4.1.S.3	Loss of Containment AND Loss OR Potential Loss of Any Other Barrier		

NOTE: If a barrier is affected it has a single point value based on a "potential loss" or a "loss". "Not Applicable" is included in the table as a place holder only, and has no point value assigned.

Barrier	Points (1-5)	potential Loss (X)	Loss (X)	Total Points	Classification
Containment			3	1 – 3	Unusual Event
NCS		4	5	4 – 6	Alert
Fuel Glad		4	5	7 – 10	Site Area Emergency
Total Points				11 - 13	General Emergency

1. Compare plant conditions against the Fission Barrier Matrix on pages 3 through 6 of 6.
2. Determine the "potential loss" or **"loss"** *status* for each barrier (Containment, **NCS** and Fuel Clad) based on the **EAL** symptom description.
3. For each barrier, **write** the highest single point value applicable for the barrier in the "Points" column and mark the appropriate "loss" column.
4. Add the points in the "Points" column and record the sum as "Total Points".
5. Determine the classification level based on the number of "Total Points".
6. In the **table** on page 1 of 6, under the "classification" column. select the event number (e.g. 4.1.A.1 for Loss of Nuclear Coolant System) that best fits the loss of barrier descriptions.
7. Using the number (e.g. 4.1.A.I) select the preprinted notification form and complete the required information for Emergency Coordinator approval and transmittal.

Enclosure 4.1
Fission Barrier Matrix

4.1.C CONTAINMENT BARRIER

POTENTIAL LOSS - (1 Point)	LOSS – (3 Points)
1. Critical Safety Function Status	
• Containment-RED • Core cooling-RED Path is indicated for >15 minutes	• Not applicable
2. Containment Conditions	
• Containment Pressure > 15 PSIG • H2 concentration > 9% • Containment pressure greater than 3 psig with less than one full train of NS and a VX-CARF operating.	• Rapid unexplained decrease in containment pressure following initial increase • Containment pressure or sump level response not consistent with LOCA conditions.

CONTINUED

4.1.N NCS BARRIER

POTENTIAL LOSS - (4 Points)	LOSS – (5 Points)
1. Critical Safety Function Status	
• NCS Integrity-Red • Heat Sink-Red	• Not applicable
2. NCS Leak Rate	
• Unisolable leak exceeding the capacity of one charging pump in the normal charging mode with letdown isolated.	• GREATER THAN available makeup capacity as indicated by a loss of NCS subcooling.

CONTINUED

4.1.F FUEL CLAD BARRIER

POTENTIAL. LOSS - (4 Points)	LOSS – (5 Points)
1. Critical Safety Function Status	
• Core Cooling-Orange • Heat Sink-Red	• Core Cooling-Red
2. Primary Coolant Activity Level	
• Not applicable	• Coolant Activity GREATER THAN 300 μCi/cc Dose Equivalent Iodine (DEI) I-131

CONTINUED

4.1.C CONTAINMENT BARRIER

POTENTIAL LOSS - (1 Point)	LOSS – (3 Points)
3. Containment Isolation Valves Status After Containment Isolation Actuation	
• Not applicable	• Containment isolation is incomplete and a release path from containment exists
4. SG Secondary Side Release With **Primary-to-**Secondary Leakage	
• Not applicable	• Releaseof secondary side to the environment with primary to secondary leakage GREATER THAN Tech Spec allowable

CONTINUED

4 POTENTIAL LOSS - (4 Points)	**LOSS** - (5 Points)
3. SG Tube Ruoture	
• Primary-to-Secondary leak rate exceeds the capacity of one charging pump in the normal charging mode with letdown isolated.	• Indication that a SG is Ruptured and has a Non-Isolable secondary line fault • Indication that a SG *is* ruptured and a prolonged release of contaminated secondary coolant is occurring from the affected SG to the environment
4 Containment Radiation Monitoring	
• Not applicable	▪ Not applicable

CONTINUED

4 POTENTIAL **LOSS** - (4 Points)	LOSS – (5 Points)
3. Containment Radiation Monitoring	
• Not applicable	• Containment radiation monitor 53 A or53 B reading > 117 R/hr
4. Emergency Coordinator/EOF Director Judeement	
• Any condition, including inability to monitor the **barrier**, that in tbe opinion of the Emergency Coordinator/EOF Director indicates LOSS or POTENTIAL LOSS of the fuel. clad barrier.	

END

Enclosure 4.1

Fission Barrier Matrix

4.1.C CONTAINMENT BARRIER

POTENTIAL LOSS - (1 Point)	LOSS – (3 Points)
5. Significant Radioactive Inventory In Containment • Containment Rad. Monitor EMF53A or 53B Reading @ time since shutdown: > 470 R/hr @ 0 - 0.5 hr > 170 R/hr @ 0.5 - 2 hr > 125 R/hr @ 2 - 4 hr > 90 R/hr @ 4 - 8 hr > 53 R/hr @ > 8 hr	• Not applicable
6. Emergency Coordinator /EOF Director Judgement • Any condition, including inability to monitor the barrier, that in the opinion of the Emergency Coordinator/EOF Director indicates **LOSS** or **POTENTIAL LOSS** of the containment barrier. **END**	

4.1.N NCS BARRIER

POTENTIAL LOSS - (4 Points)	LOSS – (5 Points)
5. Emergency Coordinator/EOF Director Judgement • Any condition, including inability to monitor the barrier, that in the opinion of the Emergency Coordinator /EOF Director indicates **LOSS** or **POTENTIAL LOSS** of the NCS barrier. **END**	

4.1.F FUEL CLAD BARRIER

POTENTIAL LOSS - (4 Points)	LOSS – (5 Points)

Enclosure 4.1

Events Requiring IMMEDIATE NRC Notification

Complete the reporting requirements for the following events as soon a5 practical after the o(urrence becomes known to the licensee

10CFR Section	Event Description	Reporting Requirement
10CFR50.72 **IEmergency Classification IYotifications**	• Declared emergency classification as specified in RP/0/A/5000/001, "Classification of Emergency". • Change from one emergency classification to another • Termination of an emergency classification • Any further degradation in the level of safety of the plant or other worsening plant conditions, including those that require the declaration of any of the emergency classes, if such **a** declaration has not been previously made • The results of ensuing evaluations or assessments **of** plant conditions • The effectiveness of response or protective measures taken. • Information related to plant behavior that is not understood • **As a** courtesy in situations deemed necessary.	Notify the NRC Operations Center immediately after notification of the appropriate state or local agencies and not later than 1 hour after the time one of the emergency classes is declared. Activate the Emergency Response Data System (ERDS) as soon as possible but not later than one hour after declaring an Alert or higher emergency classification.

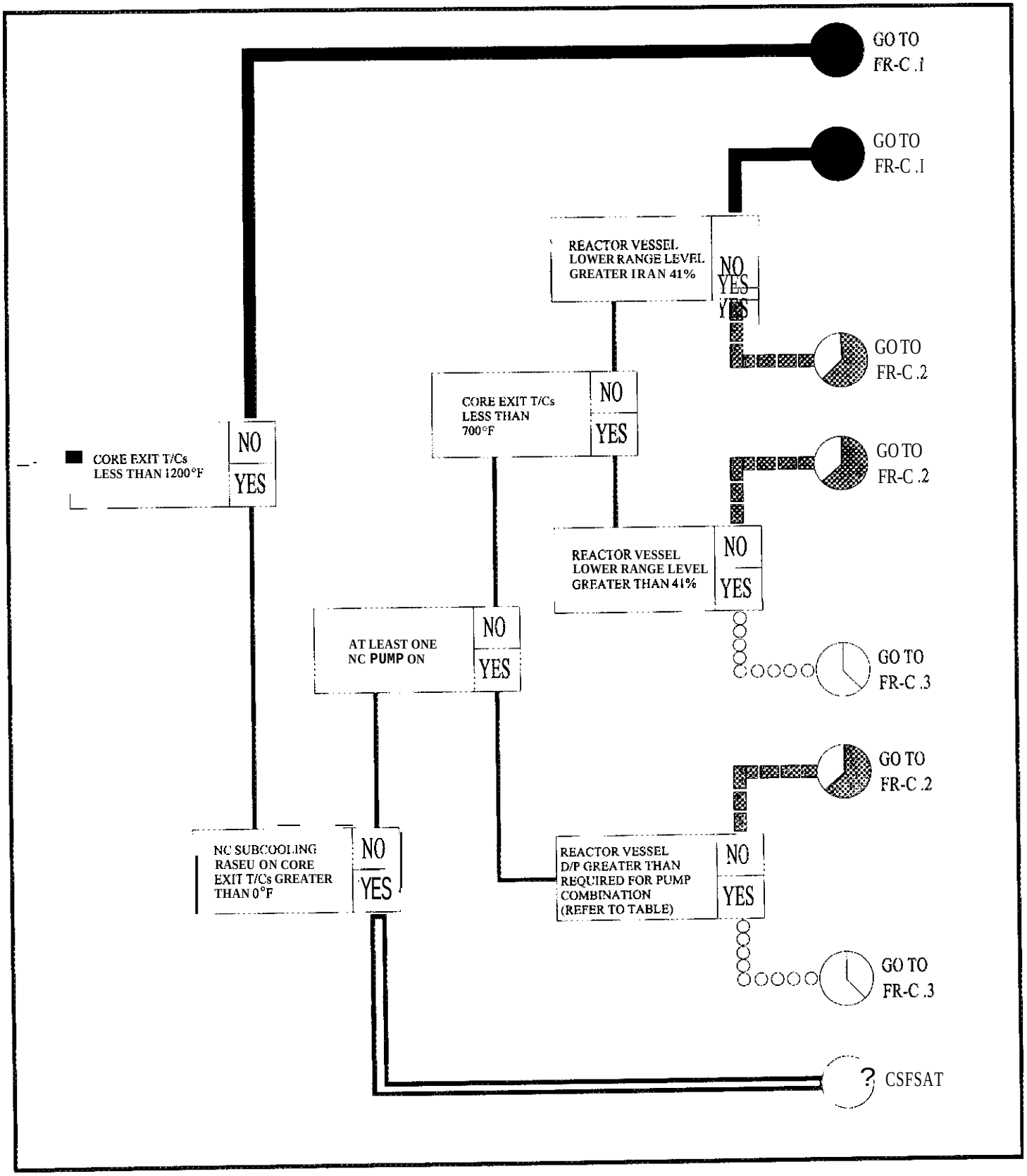
GO TO FR-C .1
GO TO FR-C .1
REACTOR VESSEL LOWER RANGE LEVEL GREATER IRAN 41%
NO
YES
YES
GO TO FR-C .2
CORE EXIT T/Cs LESS THAN 700°F
NO
YES
GO TO FR-C .2
CORE EXIT T/Cs LESS THAN 1200°F
NO
YES
REACTOR VESSEL LOWER RANGE LEVEL GREATER THAN 41%
NO
YES
GO TO FR-C .3
AT LEAST ONE NC PUMP ON
NO
YES
GO TO FR-C .2
NC SUBCOOLING RASEU ON CORE EXIT T/Cs GREATER THAN 0°F
NO
YES
REACTOR VESSEL D/P GREATER THAN REQUIRED FOR PUMP COMBINATION (REFER TO TABLE)
NO
YES
GO TO FR-C .3
? CSFSAT

MODIFIED: McGUIRE NRC 1996

Bank Question: 109 **Answer: C**

1 Pt(s)

Unit 1 was operating at 100% power when a large break LOCA occurred at 0200. The control room operators are responding to the events in E-I (Loss of Reactor or Secondary Coolant). The OSM has assumed the role of the Emergency Coordinator.

Given the following conditions and events at 0245:

- Containment pressure indicates 16 psig
- Containment Hydrogen concentration is 8.0%
- Core exit T/Cs indicate temperatures of 1100°F
- RVLIS lower range level indicates 30%
- EMF 51a and b indicate 85 R/hr
- Subcooling margin indicates -25°F

Assuming that all required EOP actions were taken, what is the correct classification for the emergency event?

REFERENCES PROVIDED
RP/0/A/5700/000
F-0

A. **Notification of an Unusual Event**

B. **Alert**

C. **Site Area Emergency**

D. **General Emergency**

Distracter Analysis: Classification as follows using NUMARC EALs:

Containment RED path =	1 EAL point (potential failure)
NGS Barrier failure =	5 EAL points
Core cooling RED path =	4 EAL point (potential failure)
Total = 10 EAL points = SAE	

A. **Incorrect:** the correct classification is an SAE
Plausible: if the candidate does not recognize the orange path or the NCS barrier failure – with the red path for containment – this results in 1 EAL point = NOUE

B. **Incorrect:** the correct classification is an SAE
Plausible: based on LOCA table only 4 EAL points from orange path in core cooling

C. **Correct Answer:**

D. **Incorrect:** the correct classification is an SAE
Plausible: based on reasonable guess and misunderstanding EAL philosophy - conditions are very bad

Bank Question: 491.1 **Answer: C**

I Pt(s)

Unit 1 experienced a LOCA with a breach **of** containment at 0200. The OSM assumed the duties of **the** Emergency Coordinator and declared a general emergency at 02 10. The initial recommended protective actions at ***0225*** were as foilows:

- Shelter zones A2, **A3,** B2, C2, D2, E2, F2, F3
- Evacuate zones A0, **Ai,** B1, C1, D1, E1, F1

At 0235, the initial dose projection information was presented to the OSM. Given the following conditions at **0245:**

- Wind direction = **450**"
- **Wind speed = 4 MPH**
- Projected dose at the site boundary
  - TEDE = 250 **mrem**
  - CDE thyroid = **400** mrem
- Containment radiation levels
  - 1EMF53A = 950 R/hr
  - **1EMF53B = 955 R/hr**

Which one of the following protective action recommendations are correct in accordance with RP/0/A/5000/05?

REFERENCES PROVIDED - RP/0/A/5000/005

A. **Change the protective action recommendation in** zones **A1 and B1 from evacuate to shelter.**

B. **Extend the evacuation to zones A2, A3, B2, C2**

C. **Extend the evacuation to zones D2, E2, F2**

D. **The initial set of protective action recommendations remain in effect with no changes required.**

Distracter Analysis:

A. **Incorrect:** - wrong zones for evacuation - never reduce actions
Plausible: - will get this answer **if** the candidate enters the wrong table - the one that has wind speed > 5mph

B. **Incorrect:** - wrong zones for evacuation
Plausible: - will get **this** answer if the candidate enters the PAR table with a reciprocal wind direction

C. **Correct** answer
D. Incorrect: - wrong zones for evacuation
Plausible: - if the candidate thinks that no changes are required to be made until the first **1** hour update - or if the candidate thinks that gap activity **has** not been exceeded.

Level: SRO Only 10CFR55.43(b)5

KA: ADM G 2.4.44(2.1 / **4.0)**

Lesson Plan Objective: SEP Obj: 24

Source: **Bank**

Level of knowledge: **analysis**

References:
I. OP-CN-EP-SEP pages 12, 15, 16
2. RP/0/A/5000/005 -pages 1-6
3. RP/)/A/5000/005 Encl4.2 and **4.3**

	Objective	ISS	LPRO	LPSO	PTRQ
21	Summarize the Subsequent Actions required for an Alert per RP/0/A/5000/003: • State the functions of the on-site monitoring teams.			X	X
22	When given a copy of RP/0/A/5000/004, apply the Immediate Actions required for a Site Area Emergency. • Explain the on-site and off-site protective actions.			X	X
23	Summarize the Subsequent Actions required for a Site Area Emergency per RP/0/A/5000/004: • State the exposure limits for emergency workers.			X	X
24	When given a copy of RP/0/A/5000/005, apply the Immediate Actions required for a General Emergency. • Explain the EPA Protective Action Guides and Recommendations. • Explain the on-site and off-site protective actions. • Show how to use the 10 mile Emergency Planning Zone (EPZ) map and Wind Determination worksheet.			X	X
25	Summarize the Subsequent Actions required for a General Emergency per RP/0/A/5000/005: • Shew how to use Protective Action Zone Determination Tables.			X	X
26	Summarize the procedure for follow-up notifications per RP/0/A/5000/006A and B: • Explain the use of the notification matrix.			X	X
27	Explain the criteria for escalation, de-escalation and termination of an emergency.			X	X

2) Notification of Unusual Event, Alert, Site/Area Emergency and General Emergency

(a) Hourly until emergency closed out

or

(b) If any significant change in situation

of

(c) As agreed upon with each agency (not to exceed 4 hours).

c) Assess plant conditions to determine the need to change emergency classifications:(Obj. 27)

1) Raise classification by declaration of Alert, Site Area or General Emergency. Make initial notification within 15 minutes of declaration.

2) Lower classification by declaration of an Alert or NOUE per Encl. 4.3 of RP/0/A/5000/004, Site Area Emergency or RP/0/A/5000/003, Alert respectively. Make initial notification within 15 minutes of declaration.

3) Termination of an emergency varies with the classification from which the emergency is being terminated. Refer to RP/0/A/5000/002 through 006A.

d) Brief plant personnel as to status of the emergency via the plant page.

e) Make Protective Action recommendations *to* states and counties, as appropriate.

f) Ensure emergency worker doses do not exceed the limits of RP/0/A/5000/018, Emergency Worker Dose Extension, as appropriate.

g) Provide turnover to the TSC Emergency Coordinator, as appropriate.

C. Personnel Responsibilities (Obj. #3)

1. Initially the OPS Shift Manager is the individual who assumes the role of Emergency Coordinator.

2. Subsequently the Station Manager or his designee will assume the role of Emergency Coordinator. After €OF activation, the €OF Director is responsible for overall emergency management.

3. Site Evacuation (Obj. #4) - May occur for Site Area Emergency and always occurs *for* General Emergency, must be preceded bv a Site Assembly. All non-essential site personnel should proceed to one of two Evacuation Sites based on site selection criteria.

   a) Site Newport - Newport Tie Station on Mt. Gallant Road near SC Hi way 161 in York County (5 miles SW). (Obj. #5)

   b) Site Allen - Allen Steam Plant off Southpoint Road in Gaston County (12 miles N). (Obj. #5)

4. Evacuation Site Selection Crtieria: (Obj. #6)

   a) Site Allen will be selected if the wind speed is less than 5 mph.

   b) If wind speed *is* greater than or equal to 5 mph

      1) Select Site Allen if the wind is from 0 to 144.9 degrees or 255.1 to 360 degrees.

      2) Select Site Newport if the wind *is* from 145 *tu* 255 degrees.

5. Evacuation of Public - Ordered by states or counties, Duke Power can only make a recommendation. (Obj. #3)

6. Securing from a Site Assembly and/or a Site Evacuation (Obj. #12)

   a) The decision to secure from a site assembly will be made by the QSM or the TSC Emergency Coordinator, as appropriate.

   b) The decision to secure from a Site Evacuation will be made by the TSC Emergency Coordinatur.

F. Offsite Emergency Planning

1. Emergency Planning Zones - Evacuation plans are prepared for the public in and about a 10 mile radius from the plant called the 10 mile Exposure Pathway Zone (EPZ), or Plume Exposure Zone. Other planning efforts are taken in the 50 mile radius from the plant called the 50 mile Ingestion Pathway Zone (IPZ). (Obj. #9)

2. Prompt Alerting Svstem - In order to alert the public to a problem at the station, an outdoor warning system of sirens has been installed in the 10 mile EPZ. These sirens can be activated only by the counties warning point for either a radiological emergency or a civil emergency (tornado, flood or nuclear attack). Sirens alert public to tune N o r radio to €AS (Emergency Alert System) for further information or directions. (Obj. #8)

3. Notification Svstem - After hearing a siren, the public is to turn on a radio or TV and listen for an Emergency Alert System (EAS) message. The message could be: (Obj. #8)

   a) Information only about the emergency.

   b) An instruction to evacuate homes, offices, schools, factories, etc.

c) An instruction to remain indoors for shelter until further instructions are available.

4. Sheltering - The states and counties have designated shelter space available (located outside the 10 mile EPZ in the host counties) for everyone in the 10 mile EPZ (EPZ counties) with food, water, and a place to sleep until they are instructed to return home.

2.2 Conducting a Site Assembly or Preparing the Site for an Evacuation

A. Referencing to RP/0/A/5000/010 and NSD **114,** discuss the foliowing:

1. Symptoms of entry. (Obj. #11)
2. Immediate and subsequent actions for Site Assembly and Evacuation. (Obj. #10)
3. Locations for Site Evacuation and basis for selection. (Obj. #**5)** (Obj. #6)
4. Actions to take if *an* individual cannot reach their assembly point. (Obj. #14)
5. Actions to take if working in the RCA/RCZ and wearing protective clothing. (Obj. #14)
6. Who may enter the protected area during a Site Assembly? (Obj. #15)

2.3 NRC Notification Requirements (Obj. #7)

A. Referencing to RP/0/A/5000/013, discuss the actions required in communicating to the NRC. Refer to enclosures to clarify notification requirements.

2.4 Distribution of Potassium Iodide Tablets in the Event of a Radioiodine Release

A. The Radiation Protection Manager in conjunction with available medical advice shall control the distribution of KI tablets.

B. KI tablets should be given to:

1. Persons suspected of having been in the affected area.
2. Persons present in the affected area.
3. Persons who will enter the area while a significant amount of radioiodine is present.

3. SUMMARY

3.1 Review Lesson Plan Objectives and answer student questions.

Duke Power Company
Catawba Nuclear **Station**

Procedure No.

RP/0/A/5000/005

Revision **No.**

041

General Emergency

Electronic Reference **No.**

CN005GNO

Reference Use

PERFORMANCE

General Emergency

1. Symptoms

1.1 Events are in process or have occurred which involve actual or imminent substantial core degradation or melting with potential for loss of containment integrity.

2. Immediate Actions

NOTE:
1. Lines in left margin are for place keeping. Immediate actions may be performed simultaneously.
2. Security events may require the suspension of access to and movement about the site. Staffing and activation of the on-site emergency response facilities could complicate or interfere with security operations resulting in unwarranted casualties.

____ **IF** a security event exists, discuss the feasibility of conducting a site assembly and activating the TSC/OSC with the Security Shift Supervisor at ***5765*** or ***5766.***

____ **IF** site assembly and activation of the TSC/OSC are not feasible, refer to the following procedure enclosures for guidance and NIA the associated steps in this procedure under Immediate Actions concerning site assembly and ERO activation:

____ RP/0/B/5000/026, "Site Response to Security Events," Enclosure 4.3 - Step 5 that evaluates taking protective action

____ RP/0/B/5000/026, "Site Response to Security Events," Enclosure 4.4 - Activation of ERO during an Imminent Security Event

____ **IF** the security event involves an insider threat, implement 2-person rule for access to all vital areas.

____ Consider delaying other actions in this procedure that could endanger site personnel until the security threat is contained.

IF TSC, OSC and EOF have **NOT** been previously activated, notify the ERO to staff emergency response facilities by performing the following steps (A and B):

____ A. Notify site personnel to activate the TSC and OSC by making the following announcement **twice** over public address system:

"This is the Operations Shift Manager. A General Emergency has been declared. Unit(s) _____ is (are) affected. Activate the TSC, OSC, and EOF."

____ B. Activate Emergency Response Organization by completing Enclosure 4.1 of this procedure.

____ Make an immediate PROTECTIVE ACTION RECOMMENDATION (PAR) to be entered on Line 15 of the Emergency Notification Form. Determine PAR based on current lower tower wind speed (use upper tower wind speed if lower tower wind speed is not available) as below:

WIND SPEED LESS THAN OR EQUAL TO 5 MPH

Evacuate zones: AO, A1, B1, C1, D1, E1, F1
AND
Shelter in place zones: A2, A3, B2, C2, D2, E2, F2, F3

OR

WIND SPEED GREATER THAN 5 MPH

Evacuate two mile radius **AND** all affected zones 5 miles downwind AND shelter *in* place remaining 10 mile EPZ as shown on Enclosure 4.2, page 2 of 2.

____ Notify off-site agencies within 15 minutes of Emergency declaration time using an Emergency Notification Form. Refer to one of the following procedures for instructions:

- RP/0/A/5000/006A, "Notifications to States and Counties from the Control Room"
- RP/0/A/5000/006B, "Notifications to States and Counties from the Technical Support Center"
- SR/0/B/2000/004, ''Notifications to States and Counties from the Emergency Operations Facility"

____ **IF** there is an indication of a radioactive release **AND** the TSC is not activated, contact RF' shift to perfom off-site dose assessment per HP/0/B/1009/26.

____ **IF a** radioactive release or hazardous material spill is occurring or has occurred **AND** the TSC is not activated, contact Environmental Management (EM), ext. **3333,** for assistance in reporting to state, local **or** federal authorities. After hours, contact the Environmental Duty person by phone or pager. **IF** no answer, page **8-777-3333** which will page all Environmental Management **personnel.**

____ Conduct a Site Assembly using RP/0/A/5000/010, "Conducting a Site Assembly or Preparing the Site for an Evacuation."

____ Conduct a Site Evacuation using RP/0/A/5000/010, "Conducting a Site Assembly or Preparing the Site for an Evacuation."

____ Notify the NRC using RP/0/B/5000/013, "NRC Notification Requirements." This notification should be made as quickly as possible but shall be made within one hour of the emergency declaration time.

____ IF Emergency Response Data System (ERDS) transmission has not been initiated (Alert or SAE classification), initiate ERDS within 1 hour of initial Alert or higher declaration by performing the following:

____ Type "ERDS" or select **"Main,"** then **"General,"** then "ERDS" on a Control Room OAC workstation connected to the affected unit's OAC.

____ Initiate ERDS transmission by depressing F1 or clicking **"Activate."**

____ IF ERDS transmission will not connect to the NRC, inform the NRC using ENS. The TSC Data Coordinator will troubleshoot and initiate ERDS transmission upon arrival in the TSC.

3. Subsequent Actions

NOTE: Subsequent Actions are not required to be followed in any particular sequence.

____ IF a security event has occurred, perform the following to account for site personnel:

____ A. WHEN Security notifies the OSM that the security threat has been terminated, make the following announcement **twice** over the public address system:

"This is the Operations Shift Manager. The security event has been terminated. The security event has been terminated."

____ B. Conduct a site assembly per RP/0/A/5000/10, "Conducting a Site Assembly or Preparing the Site for an Evacuation."

____ Ensure RP has dispatched On-Site and Off-Site Field Monitoring Teams with associated communications equipment per HP/0/B/1009/009, "Guidelines for Accident and Emergency Response."

Evaluate specific plant conditions, off-site dose projections, field monitoring team data, and assess need to update Protective Action Recommendations made to states and counties in previous notification. Refer to:

- Enclosure **4.3,** page 1 of 3, Guidance for Subsequent Protective Actions, Subsequent Protective Action Recommendation Flowchart
- Enclosure **4.4,** Evacuation Time Estimates for Catawba Plume Exposure EPZ.

_____ Make follow-up notifications to state and county authorities:

- Every hour until the emergency is terminated

OR

- If there is any significant change to the situation

OR

- As agreed upon with an Emergency Management official from each individual agency

_____ RP/0/A/5000/018, "Emergency Worker Dose Extension," shall be used to authorize emergency worker doses expected to exceed normal occupational exposure limits during a declared emergency event or exceed blanket dose extension limits authorized by the Radiation Protection Manager.

_____ Augment shift resources to assess and respond to the emergency situation as needed.

_____ Announce over the plant public address system the current emergency classification level and summary of plant status.

Assess the emergency conditions and the corresponding emergency classification. See RP/0/A/5000/001, "Classification of Emergency," then:

Remain in a General Emergency

OR

Terminate the emergency (Refer to RP/0/A/5000/020 or SR/0/B/2000/003 for Termination Criteria).

- Announce any emergency classification level changes over the plant public address system including a summary of plant status.

NOTE:	Turnover of command and control to the TSC or EOF relieves the OSM/Emergency Coordinator of classification, notification and Protective Action Recommendation (PAR) responsibilities allowing a focused effort on plant response.

_____ Turnover the responsibility of command and control for the emergency as follows:

_____ Provide turnover to the TSC Emergency Coordinator per Enclosure 4.5.

_____ IF the emergency situation prevents activation of the TSC within 75 minutes of declaration, contact the EOF Director and perform a turnover. Refer to EOF Director Turnover Form in RP/0/A/5000/020, "Technical Support Center (TSC) Activation," Enclosure 4.1.

_____ IE neither facility can take turnover, maintain command and control until one of the facilities is capable of accepting turnover.

_____ In the event that a worker's behavior or actions contributed to an actual or potential substantial degradation of the level of safety of the plant (incidents resulting in an Alert or higher emergency declaration), the supervisor must consider and establish whether or not a for cause drug/alcohol screen is required. The FFD Program Administrator is available to discuss/assist with the incident.

EOF Director will terminate the emergency and recommend entry into Recovery by briefing the off-site authorities at the Emergency Operations Facility or if necessary by phone. Document the termination briefing using Enclosure 4.6.

The EOF Director shall assign an individual to provide a written report within thirty days. This report could be an LER or a written report if an LER is not required.

Person Assigned Responsibility _____

Enclosure 4.2
10 Mile Emergency Planning Zone (EPZ) Map
and Protective Action Zone Determination Tables

Use **this table to determine** the **recommended zones** for **evacuation within** the:
2 mile radius and 5 miles downwind, when the windspeed is greater than 5 mph.

NOTE:
1. *Upper tower wind direction is preferred. If not available, use lower tower wind direction. Use wind direction from National Weather Service if site meteorological information is not available. NWS: Primary: 1-800-268-7785 Backup: 864-879-1085.*
2. *Wind direction indicator in Control Room has a scale of 0 to 540 degrees. Both 0 and 360 degrees indicate North.*
3. *Subtract 360 from wind direction indications greater than 360 degrees to arrive at wind direction for table below.*

PROTECTIVE ACTION ZONES DETERMINATION TABLE

Wind Direction (Degrees from North) (See Notes 2 & 3)	**2 Mile Radius - 5 miles Downwind** *EVACUATE*	**Remainder of EPZ** *IN-PLACE SHELTER*
348.75 -11.25	A0, B1, C1, D1	A1, A2, A3, B2, C2, D2, E1, E2, F1, F2, F3
11.26 -33.75	A0, C1, D1	A1, A2, A3, B1, B2, C2, D2, E1, E2, F1, F2, F3
33.76 -56.25	A0, C1, D1, E1	A1, A2, A3, B1, B2, C2, D2, E2, F1, F2, F3
56.26 -78.75	A0, C1, D1, E1, F1	A1, A2, A3, B1, B2, C2, D2, E2, F2, F3
78.76 -101.25	A0, C1, D1, E1, F1	A1, A2, A3, B1, B2, C2, D2, E2, F2, F3
101.26 -123.75	A0, D1, E1, F1	A1, A2, A3, B1, B2, C1, C2, D2, E2, F2, F3
123.76 -146.25	A0, E1, F1	A1, A2, A3, B1, B2, C1, C2, D1, D2, E2, F2, F3
146.26 -168.75	A0, A1, E1, F1	A2, A3, B1, B2, C1, C2, D1, D2, E2. F2, F3
168.76 -191.25	A0, A1, E1, F1	A2, A3, B1, B2, C1, C2, D1, D2, E2. F2, F3
191.26 -213.75	A0, A1, B1, E1, F1	A2, A3, B2, C1, C2, D1, D2, E2, F2, F3
213.76 -236.25	A0, A1, B1, F1	A2, A3, B2, C1, C2, D1, D2, E1, E2, F2, F3
236.26 -258.75	A0, A1, B1, F1	A2, A3, B2, C1, C2, D1, D2, E1, E2, F2, F3
258.76 -281.25	A0, A1, B1, C1	A2, A3, B2, C2, D1, D2, E1, E2, F1, F2, F3
281.26 -303.75	A0, A1, B1, C1	A2, A3, B2, C2, D1, D2, E1, E2, F1, F2, F3
303.76 -326.25	A0, B1, C1	A1, A2, A3, B2, C2, D1, D2, E1, E2, F1, F2, F3
326.26 -348.74	A0, B1, C1, D1	A1, A2, A3, B2, C2, D2, E1, E2, F1, F2, F3

Enclosure 4.3

Guidance for Subsequent Protective Actions
Subsequent Protective Action Recommendation Flowchart

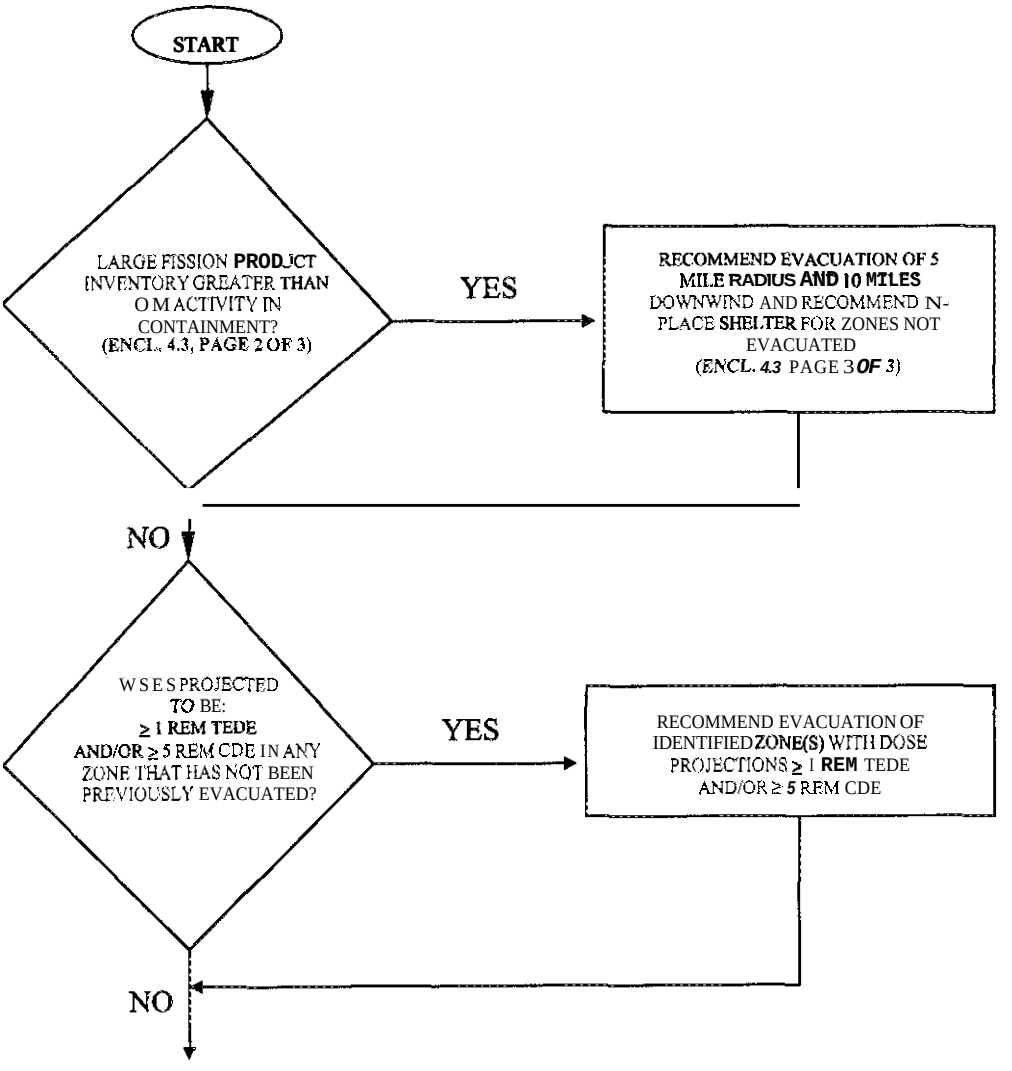

CONTINUE ASSESSMENT OF LARGE FISSION PRODUCT INVENTORY IN CONTAINMENT, DOSE PROJECTION CALCULATIONS, WIND SPEED AND WIND DIRECTION TO DETERMINE IF ADDITIONAL ZONES SHOULD BE RECOMMENDED FOR EVACUATION.

NOTE: CHANGES IN WIND SPEED AND/OR WIND DIRECTION MAY REQUIRE THAT ADDITIONAL ZONES BE RECOMMENDED FOR EVACUATION. THESE ADDITIONAL RECOMMENDATIONS ARE BASED ON THE FOLLOWING:

- IF WIND SPEED IS LESS THAN OR EQUAL TO 5 MPH AND LARGE FISSION PRODUCT INVENTORY IS LESS THAN GAP ACTIVITY IN CONTAINMENT, RECOMMEND EVACUATION OF ZONES A0, A1, B1, C1, D1, E1, AND F1 IF NOT PREVIOUSLY RECOMMENDED FOR EVACUATION
- IF WIND SPEED IS GREATER THAN 5 MPH AND LARGE FISSION PRODUCT INVENTORY IS LESS THAN O M ACTIVITY IN CONTAINMENT, USE ENCLOSURE 4.2 PAGE 2 OF 2 TO DETERMINE IF EVACUATION OF ADDITIONAL ZONES SHOULD BE RECOMMENDED
- IF LARGE FISSION PRODUCT INVENTORY IS GREATER THAN GAP ACTIVITY IN CONTAINMENT, USE ENCLOSURE 4.3 PAGE 3 OF 3 TO DETERMINE IF EVACUATION OF ADDITIONAL ZONES SHOULD BE RECOMMENDED

Guidance for Determination of Gap Activity

Fission product inventory inside Containment is greater than gap activity if the containment radiation level exceeds the levels in the table below:

TIME AFTER SHUTDOWN (HOURS)	HIGH RANGE CONTAINMENT MONITOR READING - **EMF 53A and/or EMF 53R** *100 % Gap Activity* ***Release***
0 - 2	864 R/Hr
2 - 4	624 R/Hr
4 - 8	450 R/Hr
>8	265 R/Hr

This Table Only Used For Large Fission Product Inventory Greater Than Gap Activity In Containment.
Use this table to determine the **recommended** zones for evacuation within the:
5 mile radius and 10 miles downwind for any windspeed.

NOTE 1. *Upper tower wind direction is preferred. If not available, use lower tower wind direction. Use wind direction from National Weather Service if site meteorological information is not available.* ***NWS:*** *Primary: 1-800-268-7785 Backup: 864-879-1085.*

2. *Wind direction indicator in Control Room has a scale of 0 to 540 degrees. Both 0 and 360 degrees indicate North.*

3. *Subtract 360 from wind direction indications* ***greater than*** *360 degrees to arrive at wind direction* ***for*** *table below.*

PROTECTIVE ACTION ZONES DETERMINATION TABLE

Wind Direction (Degrees from North)	**5 Mile Radius - 10 miles Downwind**	**Remainder of EPZ**
(See Notes 2 & 3)	***EVACUATE***	***IN-PLACE SHELTER***
348.75 -11.25	A0, A1, B1, B2, C1, C2, D1, D2, E1, F1	A2, A3, E2, F2, F3
11.26 -33.75	A0, A1, B1, C1, C2, D1, D2, E1, F1	A2, A3, B2, E2, F2, F3
33.76 -56.25	A0, A1, B1, C1, C2, D1, D2, E1, E2, F1	A2, A3, B2, F2, F3,
56.26 -78.75	A0, A1, B1, C1, C2, D1, D2, E1, E2, F1, F2	A2, A3, B2, F3
78.76 -101.25	A0, A1, B1, C1, D1, D2, E1, E2, F1, F2	A2, A3, B2, C2, F3,
101.26 -123.75	A0, A1, B1, C1, D1, D2, E1, E2, F1, F2, F3	A2, A3, B2, C2
123.76 -146.25	A0, A1, B1, C1, D1, E1, E2, F1, F2, F3	A2, A3, B2, C2, D2
146.26 -168.75	A0, A1, A2, B1, C1, D1, E1, E2, F1, F2, F3	A3, B2, C2, E2
168.76 -191.25	A0, A1, A2, B1, C1, D1, E1, F1, F2, F3	A3, B2, C2, D2, E2
191.26 -213.75	A0, A1, A2, A3, B1, B2, C1, D1, E1, F1, F2, F3	C2, D2, E2
213.76 -236.25	A0, A1, A2, A3, B1, B2, C1, D1, E1, F1, F2, F3	C2, D2, E2
236.26 -258.75	A0, A1, A2, A3, B1, B2, C1, D1, E1, F1, F3	C2, D2, E2, F2
258.76 -281.25	A0, A1, A2, A3, B1, B2, C1, C2, D1, E1, F1	D2, E2, F2, F3
281.26 -303.75	A0, A1, A2, A3, B1, B2, C1, C2, D1, E1, F1	D2, E2, F2, F3
303.76 -326.25	A0, A1, A3, B1, B2, C1, C2, D1, E1, F1	A2, D2, E2, F2, F3
326.26 -348.74	A0, A1, B1, B2, C1, C2, D1, D2, E1, F1	A2, A3, E2, F2, F3

Bank Question: 485.2 **Answer: D**

1 Pt(s) Unit 1 was shutdown in mode 6. Engineering reported that a recent test on the 1B KC heat exchanger showed that fouling had reduced its heat transfer capability.

- The heat exchanger was now incapable of meeting the design A temperature with a maximum (FSAR) lake water temperature of 90 °F.
- The design A temperature couid be met with *lake* water with a maximum temperature of 80 °F.
- Current lake temperature is 68 °F.
- Lake temperature is not expected to reach 80 °F far another 30 days.
- The plant is expected to remain in mode 6 for another 30 days.

Which of the following statements correctly characterizes the operability of the KC system?

REFERENCES PROVIDED: Tech Spec 3.7.7 & Bases

A. The B train of KC is inoperable because it is unable to maintain KC system temperatures below 120°F during a plant shutdown.

B. The B train of KC is inoperable because it is unable to maintain normal KC temperatures below 90 °F.

C. The B train of KC is operable but degraded as long as Lake Wylie temperature remains below 90 °F.

D. The B train of KC is operable but degraded as long as Lake Wylie temperature remains below 80 °F.

Distracter Analysis:

A. Incorrect: It is operable but in a degraded condition because it cannot perform its intended safety function - within the FSAR limits.
Plausible: The B train does not meet FSAR requirements for performance. 120°F is the maximum KC temperature for shutdown

B. Incorrect: The FSAR function can be performed for the existing situation - can temporarily satisfy the FSAR requirements
Plausible: The B train does not meet FSAR requirements for performance. 90°F is the maximum KC temperature for shutdown.

C. Incorrect: The intended FSAR functions cannot be performed above 80 °F - so it cannot be operable above 80 °F

Piausibie: B train of KC can perform **FSAR** functions until lake water temp exceeds **80** °F. The **FSAR** design limit for Lake water temperature is **90** °F - and some candidates may become confused between these temperatures

D. **Correct:** B train KC meets the requirements of NSD 203.7 - the intended FSAR function can be satisfied by the presence of certain temporary conditions (i.e. lake water remaining below 80 °F)

Level: **SRO** Only **10CFR55.43(b)2**

KA: APE 026 G2.2.25 (2.5/3.7)

Lesson **Plan** Objective: KC Obj: **13**

Source: Mod Catawba NRC **1999**

Level **of** knowledge: comprehension

References:
1. OP-CN-PSS-KC page 13
2. Tech Spec 3.7.7 - PROVIDED
3. Tech Spec **Bases** 3.7.7 -PROVIDED

	Objective	ISS	NLO	LPRO	LPSO	PTRQ
1	State the purpose of the KC System.	X	X	X	X	
2	Describe how the KC System is cooled.	X	X	X	X	
3	Describe the normal flowpath of the KC System, including each header and the type of loads serviced by each.	X	X	X	X	X
4	Explain what happens in the KC System during: - Safety Injection **(Ss)** - Phase A Containment Isolation (St) - Phase B Containment Isolation (Sp) - Blackout - Low Low KC Surge Tank Level	X	X	X	X	X
5	Given appropriate plant conditions, apply limits and precautions associated with OP/1(2)/A/6400/005 (Component Cooling Water System)	X	X	X	X	X
6	State the typical values of the KC pump discharge pressure, KC Hx outlet temperature and KC pump flow.	X	X	X	X	X
7	State the basic actions required of an NLO for a loss of Component Cooling Water and why.	X	X			
8	Describe KC system makeup.	X	X			
9	Draw a block diagram of the KC system per the KC System Simplified Drawing.	X	X			
10	Explain when the Chemistry group is to be notified concerning the KC system.	X	X	X	X	X
11	Describe the purpose of the EMF's associated with the KC System and what is indicated by a high level radiation alarm.	X	X	X	X	X
12	List the instrumentation available in the control room for the KC System.			X	X	
13	When given a set of plant conditions and access to reference materials, determine the actions necessary to comply with Tech Spec/SLC's.			X	X	X
14	Discuss the supplementary actions for the loss of KC AP.			X	X	X

b) NCDT and Excess Letdown Hx's

I) Flow controlled

2) Containment isolation for excess letdown is controlled from the NV board.

H. KC Drain header and Drain Sump

1. Containment drain isolations will ciose on St

2. KC Drain Header Loop Seal

a) Located outside containment downstream of drain header containment penetration.

b) Allows drain header to be aligned during all modes of operation.

3. One 500 gal. steel lined covered sump per unit.

a) 2 pumps per sump - Aux. Bldg 522'

b) Able to discharge to:

1) NR Chiller Surge Tank

2) Other Unit's Sump

3) KC Surge Tank

4) Mixing and Settling Tank

2.2 Operation

A. Technical Specifications and Selected Licensee Commitments (OBJ. #13)

1. Refer to Technical Specification 3.7.7(Component Cooling Water (CCW) System) and Bass.

2. Refer to Selected Licensee Commitments 16.7-10 (Radiation Monitoring For Plant Operations)

B. KC System Limits and Precautions and Special Lineups.

1. Review Limits and Precautions per OP/1/A/6400/05 (OBJ. #5)

2. KC System Alignment fer KC Heat Exchanger Cleaning (O-C95-169)

a) Alignment is used to maintain the "availability" of all essential heat loads associated with the KC Train having its heat exchanger cleaned.

b) The KC Train containing the Heat Exchanger which is not being cleaned supplies all Train A and B component loads.

B 3.7 PLANT SYSTEMS

B 3.7.7 Component Cooling Water (CCW) System

BASES

BACKGROUND

The CCW System provides a heat sink for the removal of process and operating heat from safety related components during a Design Basis Accident (DBA) or transient. During normal operation, the CCW System also provides this function for various nonessential components, as well as the spent fuel storage pool. The CCW System serves as a barrier to the release of radioactive byproducts between potentially radioactive systems and the Nuclear Service Water System (NSWS), and thus to the environment.

The CCW System is arranged as *two* independent, full capacity cooling loops, and has isolatable nonsafety related components. Each safety related train includes two 50% capacity pumps, surge tank, heat exchanger, piping, valves, and instrumentation. Each safety related train is powered from a separate bus. An open surge tank in the system provides sufficient inventory to protect the pumps from a lack of net positive suction head available (NPSHA) due to a moderate energy line break. The pumps have sufficient NPSHA with the surge tank empty provided the piping up to the tank is filled. The pumps on each train are automatically started on receipt of a safety injection signal, and all nonessential components are isolated.

Additional information on the design and operation of the system, along with a list of the components served, is presented in the UFSAR, Section **9.2** (Ref. 1). The principal safety related function of the CCW System is the removal of decay heat from the reactor via the Residual Heat Removal (RHR) System. This may be during a normal or post accident cooldown and shutdown.

APPLICABLE SAFETY ANALYSES

The safety related design basis function *of* the CCW System is to remove waste heat from various components essential in mitigating design basis events which require Emergency Core Cooling System (ECCS) operation. The CCW System is also used to support normal operation. The normal temperature of the CCW is 90°F, and, during unit cooldown to MODE 5 (T_{cold} < 200°F), a maximum temperature of 120°F is

BASES

APPLICABLE SAFETY ANALYSES (continued)

assumed (Ref. 1). This 120°F limit is to prevent thermal degradation of the large pump motors supplied with cooling water from the CCW System.

The CCW System is designed to perform its function with a single failure of any active component, assuming a loss of offsite power.

The CCW System also functions to cool the unit from RHR entry conditions (T_{cold} < 350°F), to MODE 5 (T_{cold} < 200°F), during normal and post accident operations. The time required to cool from 350°F to 200°F is a function of the number of CCW and RHR trains operating. One CCW train is sufficient to remove decay heat during subsequent operations with T_{cold} < 200°F. This assumes a maximum service water temperature of 100°F occurring simultaneously with the maximum heat loads on the system.

The CCW System satisfies Criterion 3 of 10 CFR 50.36 (Ref. 2).

LCQ

The CCW trains are independent of each other to the degree that each has separate controls and power supplies and the operation of one does not depend on the other. In the event of a DBA, one CCW train is required to provide the minimum heat removal capability assumed in the safety analysis for the systems to which it supplies cooling water. To ensure this requirement is met, two trains of CCW must be OPERABLE. At least one CCW train will operate assuming the worst case single active failure occurs coincident with a loss of offsite power.

A CCW train is considered OPERABLE when:

a. Both pumps and associated surge tank are OPERABLE; and

b. The associated piping, valves, heat exchanger, and instrumentation and controls required to perform the safety related function are OPERABLE.

The isolation of CCW from other components or systems not required for safety may render those components or systems inoperable but does not affect the OPERABILITY of the CCW System.

BASES

APPLICABILITY

In MODES 1, 2, 3, and 4, the CCW System is a normally operating system, which must be prepared to perform its post accident safety functions, primarily RCS heat removal, which is achieved by cooling the RHR heat exchanger.

In MODE 5 or 6, the requirements of the CCW System are determined by the systems it supports.

ACTIONS

A.1

Required Action A.1 is modified by a Note indicating that the applicable Conditions and Required Actions of LCO 3.4.6, "RCS Loops—MODE 4," be entered if an inoperable CCW train results in an inoperable RHR loop. This is an exception to LCO 3.0.6 and ensures the proper actions are taken for these components.

If one CCW train is inoperabie, action must be taken to restore OPERABLE status within 72 hours. In this Condition, the remaining OPERABLE CCW train is adequate to perform the heat removal function. The 72 hour Completion Time is reasonable, based on the redundant capabilities afforded by the OPERABLE train, and the low probability of a DBA occurring during this period.

B.1 and B.2

If the CCW train cannot be restored to OPERABLE status within the associated Completion Time, the unit must be placed in a MODE in which the LCO does not apply. To achieve this status, the unit must be placed in at least MODE 3 within 6 hours and in MODE 5 within 36 hours. The allowed Completion Times are reasonable, based on operating experience, to reach the required unit conditions from full power conditions in an orderly manner and without challenging unit systems.

SURVEILLANCE REQUIREMENTS

SR 3.7.7.1

This SR is modified by a Note indicating that the isolation of the CCW flow to individual components may render those components inoperable but does not affect the OPERABILITY of the CCW System.

Verifying the correct alignment for manual, power operated, and automatic valves in the CCW flow path to safety related equipment provides assurance that the proper flow paths exist for CCW operation.

BASES

SURVEILLANCE REQUIREMENTS (continued)

Phis SR does not apply to valves that are locked, sealed, or otherwise secured in position, since these valves are verified to be in the correct position prior to locking, sealing, or securing. This **SR** also does not apply to valves that cannot be inadvertently misaligned, such as check valves. This Surveillance does not require any testing or valve manipulation; rather, it involves verification that those valves capable of being mispositioned are in the correct position.

The 31 day Frequency is based on engineering judgment, is consistent with the procedural controls governing valve operation, and ensures correct valve positions.

SR 3.7.7.2

This **SR** verifies proper automatic operation of the CGW valves on an actual or simulated actuation safety injection, Phase 'A' Isolation, or Phase 'B Isolation signal. The CCW System is a normally operating system that cannot be fully actuated as part **of** routine testing during normal operation. This Surveillance is not required for valves that are locked, sealed, or otherwise secured in the required position under administrative controls. The 18 month Frequency is based on the need to perform this Surveillance under the conditions that apply during a unit outage and the potential for an unplanned transient if the Surveillance were performed with the reactor at power. Operating experience has shown that these components usually pass the Surveillance when performed at the 18 month Frequency. Therefore, the Frequency is acceptable from a reliability standpoint.

SR 3.7.7.3

This **SR** verities proper automatic operation of the CCW pumps on an actual or simulated actuation signal. The CCW System is a normally operating system that cannot **be** fully actuated as part of routine testing during normal operation. The 18 month Frequency is based on the need to perform this Surveillance under the conditions that apply during a unit outage and the potential for an unplanned transient if the Surveillance were performed with the reactor at power. Operating experience has shown that these components usually pass the Surveillance when performed at the 18 month Frequency. Therefore, the Frequency is acceptable from a reliability standpoint.

BASES

REFERENCES

1. UFSAR, Section **9.2.**

2. 10 CFR 50.36, Technical Specifications, (c)(2)(ii)

3.7 PLANT SYSTEMS

3.7.7 Component Cooling Water (CCW) System

LCO 3.7.7 Two CCW trains shall be OPERABLE*.

APPLICABILITY: MODES 1, 2, 3, and 4.

ACTIONS

CONDITION	REQUIRED ACTION	COMPLETION TIME
A. One CCW train inoperable.	A.1 ----------NOTE---------- Enter applicable Conditions and Required Actions of LCO 3.4.6, "RCS Loops—MODE 4," for residual heat removal loops made inoperable by CCW. ---------- Restore CCW train to OPERABLE status.	72 hours'
B. Required Action and associated Completion Time of Condition A not met.	B.1 Be in MODE 3. AND B.2 Be in MODE 5.	6 hours 36 hours

*For each CCW :rain on Unit 2, the Completion Time that one CCW train can be inoperable as specified by **Required** Action A.1 may he extended beyond the 72 hours up to 288 hours as part of the NSWS system upgrades. System upgrades include maintenance and modification activities associated with the NSWS piping. valves, arid branch lines, necessary repairs and/or replacement, and replacement of portions of the NSWS piping to the **AFW** system. Upon completion of the cleaning. upgrades, and system *restoration* in *refueling* outage 1 EOC12, this footnote is no longer applicable.

SURVEILLANCE REQUIREMENTS

SURVEILLANCE		FREQUENCY
SR 3.7.7.1	----------NOTE---------- Isolation of CCW flow to individual components does not render the CCW System inoperable. ---------- Verify each CCW manual, power operated, and automatic valve in the flow path servicing safety related equipment, that is not locked, sealed, or otherwise secured in position, is in the correct position.	31 days
SR 3.7.7.2	Verify each CCW automatic valve in the flow path servicing safety related equipment that is not locked, sealed, or otherwise secured in position, actuates to the correct position on an actual or simulated actuation signal.	18 months
SR 3.7.7.3	Verify each CCW pump starts automatically on an actual or simulated actuation signal.	18 months

MODIFIED: CATAWBA NRC EXAM 1999

Bank Question: 485 **Answer: B**

---

1 Pt(s)

Unit 1 was shutdown in mode 6. Engineering reported that a recent test on the RN heat exchanger showed that fouling had reduced its heat transfer capability.

- The heat exchanger was now incapable of meeting the design delta temperature with **a** maximum (FSAR) lake water temperature of 90 °F.
- The design delta temperature could be met with lake water with a maximum temperature of 80 °F.
- Current lake temperature is 68 °F
- Lake temperature is **not** expected to reach 80 °F for another 30 days.
- The plant is expected to remain in mode ***6*** for another 30 days

Which of the following statements correctly characterizes the operability of the RN heat exchanger?

REFERENCES PROVIDED: Tech Spec 3.7.8 & Bases

A. Operable for 30 days

B. Operable but degraded as long as Lake Wylie temperature remains below 80 °F.

C. Operable but degraded as long as Lake Wylie temperature remains below 90 °F.

D. Inoperable

Distracter Analysis:

A. **Incorrect: It** is operable BUT in **a** degraded condition because it cannot **perform** its intended safety function - within the FSAR limits. **Plausible:** If lake temperature will not exceed it's delta temp limits for 30 days, it could be considered operable until temp reaches the limit. In addition, the RN system is not required to be operable in mode 6 so some may **think** that they can call it operable if it is not required in the mode that they are in.

B. **Correct answer** meets the requirements of NSD 203.7 - the intended ***SAR*** function can be satisfied by the presence of certain temporary conditions (i.e. lake water remaining below 80 °F)

C. **Incorrect:** The intended ***SAR*** functions cannot be performed above 80 °F - so it cannot be operable **above** 80 °F

Plausible: Can perfom SAR functions until *lake* water temp exceeds 80 °F. The FSAR design limit for Lake water temperature is **90** °F - and some candidates may become confused between these temperatures

D. Incorrect: The SAR function can be performed for the existing situation - can temporarily satisfy the **SAR** requirements
Plausible: if the candidate does not know the definition of "operable" and "operable but degraded".

Bank Question: 483.1 **Answer: D**

1 Pt(s)

Unit 1 is in mode 6 and refueling operations are in progress. Given the following Conditions and events:

- The Fuel Handling Manipulator Crane Operator (FHMCO) has indexed the mast over the location where fuel assembly N-8 will be inserted.
- All conditions and indications on the Fuel Handling Manipulator Crane are satisfied for inserting the fuel assembly.

Which one of the fallowing statements describes the responsibility of the Fuel Handling SRO associated with inserting the fuel assembly?

A. Must give his permission to the OAT6 prior to inserting the assembly. Operates the Latch/Unlatch switch. Verifies the fuel handlers are documenting satisfactory completion of each rod latch.

B. Must obtain permission from the OATC prior to inserting the assembly. Qperates the Latch/Unlatch switch. Documents satisfactory completion of each assembly insertion.

C. Supervises reactivity management and verifies maintenance technicians are continuously monitoring the load cell. Must obtain permission from the OATC prior to inserting the assembly.

D. Supervises reactivity management and personally monitors the fuel insertion operation. Must give his permission to the FHMCO prior to unlatching the assembly.

Distracter Analysis:

A. Incorrect: The OATC is not in the approval chain - FHMCO operates the latching mechanism.
Plausible: matches with elements in other distracters, and sounds supervisory.

B. Incorrect: The OATC is not in the approval chain - FHMCO operates the latching mechanism.
Plausible: if the candidate feels that more control is needed.

C. Incorrect: The OATC is not in the approval chain
Plausible: If the candidate thinks that the CR is in charge.

D. Correct:

Level: SRO Only 10CFR55.43(b)6

KA: G 2.2.27 (2.6 / 3.5)

Lesson Plan Objective: FL Obj: 5

Source: Bank

Level of **howledge:** memory

References:
1. OP-CN-FH-FL pages IO, I4

	Objective	ISS	NLO	LPRO	LPSO	PTRQ
1	Explain the purpose of the Containment Purge System.	X	X	X	X	
2	Describe the normal flowpath of the VP System and the refueling flowpath.	X	X	X	X	X
3	Explain the importance of a proper flow balance during VP System Operations.	X	X	X	X	X
4	Explain the purpose and use of local controls.	X	X			
5	Explain the functions and locations of the VP System controls and indications.			X	X	
6	Describe the startup, monitoring, and shutdown of the VP System per the OP.			X	X	X
7	Describe the automatic actions that occur to the VP System in the event of an S_H signal, an alarm on EMF-39, or fan trig signal.	X	X	X	X	X
8	Given the appropriate plant conditions, apply Limits and Precautions associated with related station procedures.	X	X	X	X	X
9	Explain how to complete a purge release form after a purge is complete.			X	X	X
10	Describe startup, monitoring and shutdown of the Incore Instrument Room Purge System per the OP.			X	X	X
11	Given a set of plant conditions and access to reference materials, determine the actions necessary to comply with Tech Specs/SLCs.			X	X	X
12	State the system designator and nomenclature for major components	X				

D. The rheostats associated with the supply and exhaust dampers will be positioned fully clockwise to ensure the suppiy and exhaust dampers are closed and recirc dampers are open (refer to Figure 9, 10).

E. Set EMF-39 setpoints to the specified values and setup the associated chart recorder.

F. Enter release initiation information on the Release Record

1. Date/Time release initiated
2. Initial integrator reading

G. Start VP supply and exhaust fans. (refer to Figure *6)*

H. Verify containment isolation valves open.

I. Balance supply and exhaust flows to prevent pressurization or vacuum inside containment (refer to Figure *5).*

J. Notify RP that Containment Purge has been initiated

3.3 Shutdown of Containment Purge (Obj. #6)

A. Verify Initial Conditions.

B. Notify appropriate personnel that that the VP release will be terminated.

C. Place the Containment Purge Fan Units Control Switch to "OFF" (refer to Figure *6).*

1. Verify all fans stop and all containment isolation valves close (refer to Figure 6).

D. The rheostats associated with the supply and exhaust dampers will be positioned fully clockwise to ensure the supply and exhaust dampers are closed and recirc dampers are open (refer to Figures 9, 10).

E. Ensure mode selector switch is in the "NORM" position prior to the reactor vessel missile shieid being put into place. This will prevent overpressurizing upper containment (refer to Figure 5).

F. Place the key operated valves "Enable" switches to the "BLK CLSD" position (refer to Figures 7, 8).

G. Position "Enable" switches for valves and fans to "BLOCK' (refer to Figures 7, 8).

H. Stamp EMF chart recorder.

I. Notify RP and enter release termination information on the release record. (Obj. #9)

1. Date/Time release terminated
2. Final integrator reading and volume released
3. Highest EMF reading

A/2

1EMF-39 CONTAINMENT GAS HI RAD

SETPOINT: Per HP/0/B/1000/010 (Determination of Radiation Monitor Setpoints).

ORIGIN: 1EMF-39 beta scintillation detector (low range).

PROBABLE CAUSE: Radioactive spill/leak inside containment,

AUTOMATIC ACTIONS:

1. IE below P-6. the containment evacuation alarm is actuated.
2. IE at least one train of SSPS is **NOT** in test, the containment ventilation isolation signal is actuated (S_H).
3. The Containment Purge System (VP) is isolated.

IMMEDIATE: ACTIONS:

1. Verify that the Containment Purge System (VP) has isolated.
2. IF at least one train of SSPS is **NOT** in test, verify that the Containment Air Reiease and Addition System has isolated.
3. Ensure all personnel **are** evacuated from containment.
4. Use "SAMPLE FLOW SELECT' module **to** determine if alarm is from upper containment. lower containment or incore instrument room.
5. Refer to AP/1/A/5500/10 (Reactor Coolant Leak).

SUPPLEMENTARY ACTIONS:

1. Notify Radiation Protection personnel of this alarm

NOTE: Ifthe EMF is reset prior to securing VP per the following step, the system will restart automatically. 1

2. Secure VP per OP/1/A/6450/015 (Containment Purge System).
3. **IF** actuated, reset the containment ventilation isolation signal when this alarm clears.

NOTE: If annunciator alarm is due to an actual hi rad signal, a new GWR will be required before reinitiating VP or VQ.

4. Manually reinitiate the Containment Purge System (VP) or Containment Air Release and Addition System (VQ) as needed
5. Refer to Tech Specs 3.4.13, 3.4.14 and 3.4.15.

CONTINUED ON THE NEXT PAGE

Bank Question:479.3 **Answer: B**

1 Pt(s)

Unit 2 is conducting a containment purge in accordance with OP/2/A/6450/015 (*Containment* ***Purge*** System). Given the following conditions provided on the GWR permit:

- Most restrictive release rate = 16000 CFM
- Recommended release rate = 16000 CFM
- 2EMF-39(L) trip 1 setpoint = 1.0E5 CPM
- 2EMF-39(L) trip 2 = 2.0E5 CPM
- 1EMF-36(L) is in service

Time		0215	0230	0245
Release rate (CFM)	15750	16500	17500	18500
EMF-39 (CPM)	1.8E5	2.2E5	2.1E5	3.2E5

If the operators restart the VP purge whenever allowed by procedure, what is the earliest time (if any) that the operators are reauired to terminate the gaseous release and obtain a revised GWR?

A. **0200**

B. **0215**

C. **0230**

D. **0245**

Distracter Analysis: OP/1/A/6450/015 allows the operators to reinitiate a containment release IF 1EMF-39(L) spikes. This question does not indicate that there is a spike – but rather that the maximum release rate has been exceeded due to high flow rates through the containment purge line.

A. **Incorrect:** - no reason to terminate at 0200.
Plausible: - exceeds trip I on IEMF-39 and close to recommended release rate.

B. **Correct answer** – exceeded recommended release rate, most restrictive release rate and reached trip 2 on 1EMF-39(L). **This** clearly exceeds the release limits and there is no indication that the EMF spiked.

C. **Incorrect:** - already should have terminated.
Plausible: - Exceeds recommended release rate – must terminate. EMF-39 tripped VP **for** the 2nd time - if the candidate thinks you *can* reset once and continue as allowed for a spike in the EMF

D. **Incorrect:** - should already be terminated.

Plausible: - This is the answer *is* the release rate was not exceeded.

Level: SRO Only 10CFR55.43(b)4

KA: G 2.3.9 (2.5/3.4)

Lesson Plan Objective: CNT-VP Obj:7/9

Source: Mod Ques_479.I McGuire NRC 2002

Level of knowledge: comprehension

1. OP-CN-CNT-VP page 15
2. OP/2/A/6450/15 page 2
3. OP/1/A/6450 Encl 4.1 page 4
3. OP/1/B/6100/010X 1RAD-1 A/2
4. HP/0/B/1004/005 pages 1-5
5. HP/0/B/1004/034 Encl 5.2 (GWR)

	Objective	ISS	NLO	LPRO	LPSO	PTRQ
1	Explain the purpose of the Containment Purge System.	X	X	X	X	
2	Describe the normal flowpath of the VP System and the refueling flowpath.	X	X	X	X	X
3	Explain the importance of a proper flow balance during VP System Operations.	X	X	X	X	X
4	Explain the purpose and use of local controls.	X	X			
5	Explain the functions and locations of the VP System controls and indications.			X	X	
6	Describe the startup, monitoring, and shutdown of the VP System per the OQ.			X	X	X
7	Describe the automatic actions that occur to the VP System in the event of an S_H signal, an alarm on EMF-39, or fan trip signal.	X	X	X	X	X
8	Given the appropriate plant conditions, apply Limits and Precautions associated with related station procedures.	X	X	X	X	X
9	Explain how to complete a purge release form after a purge is complete.			X	X	X
10	Describe startup, monitoring and shutdown of the Incore Instrument Room Purge System per the OP.			X	X	X
11	Given a set of plant conditions and access to reference materials, determine the actions cessary to comply with Tech Specs/SLCs.			X	X	X
12	State the system designator and nomenclature for major components	X				

Containment Purge System

1. Purpose

The purpose of this procedure is to outline the operation of the Containment Purge System (VP).

2. Limits and Precautions

2.1 After refueling, ensure the "FUEL-NORM" switch is returned to "NORM" prior to putting the reactor vessel missile shield into place. This prevents pressurizing upper containment.

2.2 A new Gaseous Waste Release (GWR) sample is required if:

- 24 hours has elapsed since the last sample.

NOTE: **If** actuation is due to an EMF spike, the release may be re-attempted twice before a new sample is required.

- VP release is automatically stopped due to **a** controlling EMF actuation.

2.3 Any time initial entry into lower containment is desired, the incore instrument room shall be sampled by Radiation Protection (RP) and purged unless **the** Operations Shift Manager (OSM) deems purging unnecessary.

2.4 Do **NOT** reset containment ventilation isolation **until** spurious containment radiation level signals **ok** any associated EMF alarms *are* properly cleared.

2.5 Any sudden increase or decrease in pressure across any filter bank shall be investigated immediately.

2.6 For two train operation, **the** VP Pre-filters shall be replaced when the combined Pre-filter and upstream HEPA differential pressure reaches 2" H_2O.

2.1 For single train operation, the VP Pre-filters shall be replaced when the combined Pre-filter and upstream HEPA differential pressure reaches 3" H_2O.

2.8 If 1EMF-37 or 1EMF-40 has reached the Trip **1** setpoint, RP shall be notified to change the cartridge before a release is attempted.

2.9 Do NOT initiate purge **of** containment with 1EMF-39 inoperable. Once initiated, VP can continue with 1EMF-39L inoperable under the limitations presented in Enclosure 4.9 (Actions for EMF-39 Inoperability With VP in Service).

_____ 2.9.4 Verify the following valves located on 1RB-ECP-3 (AH-594, MM-52) open:

- ☐ 1VP001B (Upper Cont Purge Supply Outside Isol)
- ☐ 1VP003B (Upper Cont Purge Supply Outside Isol)
- ☐ 1VP006B (Lower Cont Purge Supply Outside Isol)
- ☐ 1VP008B (Lower Cont Purge Supply Outside Isol)
- ☐ 1VP011B (Upper Cont Purge Exhaust Outside Isol)
- ☐ 1VP013B (Upper Cont Purge Exhaust Outside Isol)
- ☐ 1VP016B (Lower Cont Purge Exhaust Outside Isol)

CAUTION:
- Supply and exhaust air flow rates should be identical to prevent pressurization OF vacuum inside containment.
- Bo **NOT** exceed the Recommended Release Rate on **the** GWR Permit Report.

_____ 2.10 Establish Containment Purge supply and exhaust air flow at 1RB-CP-1 (AB-534, LL-52, Rm 500) at a rate greater than 10,000 CFM and Less than or equal to the "Recommended Release Rate (cfm)" specified on the GWR Permit Report as **follows:**

2.10.1 Maintain supply and exhaust air flow rates equal as indicated on the following gauges **while** adjusting flow in the foliowing step:

- "1VPP5150 (CPS-AFMD-1) CONT. PURGE SUPPLY AIR FLOW"
- "1VPP5200 (CPE-AFMD-1) CONT. PURGE EXHAUST AIR FLOW"

2.10.2 Simultaneously adjust the following minimum position switches in the "DECREASE" (counter-clockwise) direction to increase supply and exhaust air flow rates to achieve the desired flow rate while maintaining air flow rates balanced:

- "CONTAINMENT AREA PURGE SUPPLY"
- "CONTAINMENT AREA FILTER EXHAUST"

2.11 Notify RP shift personnel that containment purge has been initiated.
Person notified _____

2.12 File this enclosure in the Control Copy folder of this procedure.

A/2

1EMF-39 CONTAINMENT GAS HI RAD

SETPOINT: Per HP/0/B/1000/010 (Determination of Radiation Monitor Setpoints).

ORIGIN: 1EMF-39 beta scintillation detector (low range).

PROBABLE CAUSE: Radioactive spill/leak inside containment.

AUTOMATIC ACTIONS:

1. **IF** below P-6, the containment evacuation alarm is actuated.
2. **IF** at least one train of SSPS is **NOT** in test, the containment ventilation isolation signal is actuated (S_H).
3. The Containment Purge System (VP) is isolated.

IMMEDIATE ACTIONS:

1. Verify that the Containment Purge System (VP) has isolated.
2. **IF** at least one train of SSPS is **NOT** in test, verify that the Containment Air Release and Addition System has isolated.
3. Ensure all personnel are evacuated from containment.
4. Use "SAMPLE FLOW SELECT" module to determine if alarm is from upper containment, lower containment or incore instrument room.
5. Refer to AP/1/A/5500/10 (Reactor Coolant Leak).

SUPPLEMENTARY ACTIONS:

1. Notify Radiation Protection personnel of this alarm.

NOTE: If the EMF is reset prior to securing VP per the following step, the system will restart automatically.

2. Secure VP per OP/1/A/6450/015 (Containment Purge System).
3. **IF** actuated, reset the containment ventilation isolation signal when this alarm clears.

NOTE: If annunciator alarm is due to an actual hi rad signal, a new GWR will be required before reinitiating VP or VQ.

Enclosure 5.1

Gaseous Waste Release (GWR) Record

Shift Supervisor or Designee authorizing GWR release (signature required) _____ Date/Time _____ / _____ GWR # _____

VQ release monitored by EMF 39(L) This Copy has been compared with the Control Copy and Verified Correct Initial _____ Date _____ Time _____

(1) Date/Time VQ Release Initiated (Notify RP)	Initial Integrator Reading	Final Integrator Reading	(2) EMF39L Operable and Source Checked and Independent Verification (I.V.) required for EMF Trip Setpoints	Highest (3) EMF39L reading during release	EMF39L setpoints reset to non-release value	Date/Time Release Suspended or Terminated (Notify RP)	(4) VQ volume = Final Integrator reading × 10	(2) Control Room Operator (signature required)
			(I.V.)					
			(I.V.)					
			(I.V.)					
			(I.V.)					
			(I.V.)					
			(I.V.)					
			(I.V.)					
			(I.V.)					
			(I.V.)					
			(I.V.)					
			(I.V.)					
			(I.V.)					
			(I.V.)					
			(I.V.)					
			(I.V.)					
			(I.V.)					
			(I.V.)					
			(I.V.)					
			(I.V.)					

Total volume released _____ ft3

Note 1 Notify RP Compliance of each VQ release start and stop time. Ensure EMF chart recorder is stamped at start of release and at completion of each release.
Note 2 IF consecutive VQ releases are made ensure GWR record is updated for each release. IF EMF 39(L) is removed from service and EMF 36(L) is used to monitor the release, request a new GWR from RP Compliance. Not Applicable (N/A) may be used on this GWR record.
Note 3 Reset EMF 39 (L) Trip 1 and 2 setpoints to non-release setpoints when VQ System is NOT in service. Update Control Room EMF Setpoint Log.
Note 4 Volume for each VQ release = Final Integrator Reading x 10

Termination of GWR release acknowledged by Shift Supenisor or Designee (signature required) _____ Date/Time _____ / _____

Enclosure 51

Gaseous Waste Release (GWR) Record

Shift Supervisor or Designee authorizing GWR release (signature required) _____ **Date/Time** _____ / _____ GWR # _____

EMF 39(L) was inoperable in TSAIL on: Date _____ Time _____ **(OPS)** Initial _____

VQ release monitored **by EMF 36(L)** **This** Copy has been compared with the Control Copy **and** Verified Correct Initial _____ Date _____ **T i e** _____

(1) Date/Time VQ Release Initiated (Notify RP)	Initial Integrator Reading	Final integrator Reading	(2) EMF36L Operable and Source Checked and Independent Verification (I.V.) required for EMF Trip Setpoints	Highest (3) EMF36L reading during release	EMF36L Setpoints per OPS Setpoint Log	Date/Time Release Suspended OK Terminated (Notify RP)	(4) VQ volume = Final Integrator reading x 10	(2) Control Room operator (signature required)
			(I.V.)					
			(I.V.)					
			(I.V.)					
			(I.V.)					
			(I.V.)					
			(I.V.)					
			(I.V.)					
			(I.V.)					
			(I.V.)					
			(I.V.)					
			(I.V.)					
			(I.V.)					
			(I.V.)					
			(I.V.)					
			(I.V.)					
			(I.V.)					

Total volume released: _____ ft^3

Note 1 **Notify** RP Compliance of each VQ release **start** and stop time. **Ensure** EMF chart recorder is stamped at **start** of release and **at** termination of each release.
Note 2 **IF** consecutive releases **are** made ensure GWR record is updated for each release. **IF** EMF 36(L) **is** removed from service. request a new GWR from RP Compliance Ensure EMF inoperable date **and** time is consistent **with** TSAIL. Not Applicable (N/A) m y be used on this GWR record.
Note 3 EMF 36(L) Trip 1 and 2 setpoints **are** per OPS Setpoint **Log**. During normal **VQ** operation, EMF 36(L) setpoints are **NOT** required **to** be reset.
Note 4 Volume for each VQ release = Final Integrator Reading **x** 10

Termination of GWR release acknowledged by **Shift Supervisor** or Designee (signature required) _____ Date/Time _____ / _____

Enclosure 5.1

Gaseous Waste Release (GWR) Record

Shift Supervisor or Designee authorizing GWR release (signature required) _____ Date/Time _____ / _____ GWR #_____

VP release monitored by EMF 39(L) This Copy has been compared with the Control Copy and Verified Correct Initial _____ Date _____ Time _____

(1) Date/Time VP Release Initiated (Notify RP)	Initial Integrator Reading	Final Integrator Reading	(2) EMF39L Operable and Source Checked and Independent Verification (I.V.) required for EMF Trip Setpoints	Highest(3) EMF39L reading during release	EMF39L setpoints reset to non-release value	Date/Time Release Suspended or Terminated (Notify RP)	(4) VP volume = Final Integrator reading × 1000	(2) Control Room Operator (signature required)
			(I.V.) (I.V.)					
			(I.V.) (I.V.)					
			(I.V.) (I.V.)					
			(I.V.) (I.V.)					
			(I.V.) (I.V.)					
			(I.V.) (I.V.)					
			(I.V.) (I.V.)					
			(I.V.) (I.V.)					
			(I.V.) (I.V.)					
			(I.V.) (I.V.)					

Total volume released: _____ ft^3

Note 1 Notify RP Compliance of each VP release start and stop time. Ensure EMF chart recorder is stamped at start of release and at termination of each release.

Note 2 **IF** consecutive releases are made, ensure the GWR record is updated for each release. **IF** EMF 39(L) is removed from service and EMF 36(L) is used to monitor the release, ensure RP Compliance is notified of EMF inoperable condition. Not Applicable (N/A) may be used on this GWR record.

Note 3 Reset EMF 39(L) Trip 1 and 2 setpoints to non-release setpoints when VP System is **NOT** in service. Update Control Room EMF Setpoint Log.

Note 4 Volume for each VP release = Final Integrator Reading × 1000

Termination of GWR release acknowledged by Shift Supervisor or Designee (signature required) _____ Date/Time _____ / _____

Enclosure 5.1

Gaseous Waste Release (GWR) Record

Shift Supervisor or Designee authorizing GWR release (signature required) _____ Date/Time _____/_____ GWR #_____

EMF 39(L) was inoperable in TSAIL on: Date _____ Time _____ (QPS) Initial _____

VP release monitored by EMF 36(L) This Copy has been compared With the Control Copy and Verified Correct Initial _____ Date _____ Time _____

(1) Date/Time VP Release Initiated (Notify RP)	Initial Integrator Reading	Final Integrator Reading	(2) EMF36L Operable and Source Checked and Independent Verification (I.V.) required for EMF Trip Setpoints	Highest (3) EMF36L reading during release	EMF36L Setpoints per OPS Setpoint Log	Date/Time Release Suspended or Terminated (Notify RP)	(4) VP Volume = Final Integrator reading × 1000	(2) Control Room Operator (signature required)
			(I.V.) (I.V.)					
			(I.V.) (I.V.)					
			(I.V.) (I.V.)					
			(I.V.) (I.V.)					
			(I.V.) (I.V.)					

Total volume released _____ A'

Note 1 Notify RP Compliance of each VP release start and stop time. Ensure EMF chart recorder is stamped at start of release and at termination of each release.
Note 2 IF consecutive releases are made, ensure the GWR record is updated for each release. IF EMF 39(L) is removed from service and EMF 36(L) is used to monitor the release, ensure EMF inoperable date and time on GWR record is consistent with TSAIL. Not Applicable (N/A) may be used on this GWR record.
Note 3 EMF 36(L) Trip 1 and 2 setpoints are per OPS Setpoint Log. During normal VP operation, EMF 36(L) setpoints are NOT required to be reset.
Note 4 Volume for each VP release = Final Integrator Reading x 1000

Termination of GWR release acknowledged by Shift Supervisor or Designee (signature required) _____ Date/Time _____/_____

Enclosure 51

Gaseous Waste Release (GWR) Record

Shift Supervisor or Designee authorizing **GWR** release (signature required) _____ Date/Time _____ / _____ GWR # _____

IP release monitored by EMF 39(L) This Copy has been compared With the Control Copy and Verified Correct Initial _____ Date _____ Time _____

(1) Date/Time IP Release Initiated (Notify RP)	Initial Integrator Reading	Final Integrator Reading	(2) EMF39L Operable and Source Checked and Independent Verification (I.V.) required for EMF Trip Setpoints	Highest (3) EMF39L reading during release	EMF39L setpoints reset to non-release value	Date/Time Release Suspended or Terminated (Notify RP)	(4) IP volume = Final Integrator reading x 100	Control Room Operator (signature required)
			(I.V.)					
			(I.V.)					
			(I.V.)					
			(I.V.)					
			(I.V.)					
			(I.V.)					
			(I.V.)					
			(I.V.)					
			(I.V.)					
			(I.V.)					
			(I.V.)					
			(I.V.)					
			(I.V.)					
			(I.V.)					
			(I.V.)					
			(I.V.)					

Total volume released: _____ ft^3

Note 1 Notify RP Compliance of each IP release *start* and stop time. Ensure EMF chart recorder is stamped at start of release and at completion of each release.
Note 2 IF consecutive releases are on the same GWR, ensure record is updated for each release. IF EMF 39(L) is removed from service and EMF 36(L) is used to monitor the release, ensure RP Compliance is notified. Not Applicable (N/A) may be used on this record.
Note 3 Reset EMF 39(L) Trip 1 and 2 setpoints to non-release setpoints when IP System is NOT in service. Update Control Room EMF Setpoint Log.
Note 4 Volume for each IP release = Final Integrator Reading x 100

Termination of GWR release acknowledged by Shift Supenisor *or* Designee (signature required) _____ Date/Time _____ / _____

Enclosure 5.1

Gaseous Waste Release (GWR) Record

Shift Supervisor or Designee authorizing GWR release (signature required) _____ Date/Time _____ / _____ GWR # _____

EMF39(L) was Inoperable in TSAIL on: Date _____ Time _____ (OPS) Initial _____

IF release monitored by EMF 36(L) This Copy has been compared with the Control Copy and Verified Correct. Initial _____ Date _____ Time _____

(1) Date/Time IP Release Initiated (Notify RP)	Initial Integrator Reading	Final Integrator Reading	(2) EMF36L Operable and Source Checked and Independent Verification (I.V.) required for EMF Trip Setpoints	Highest (3) EMF36L reading during release	EMF36L Setpoints per OPS Setpoint Log	Date/Time Release Suspended or Terminated (Notify RP)	(4) IP Volume = Final Integrator reading x 100	(2) Control Room operator (signature required)
			(I.V.) (I.V.)					
			(I.V.) (I.V.)					
			(I.V.) (I.V.)					
			(I.V.) (I.V.)					
			(I.V.) (I.V.)					

Total volume released: _____ ft^3

Note 1 Notify RP Compliance of each IP release start and stop time. Ensure EMF chart recorder is stamped at start of release and at completion of each release.
Note 2 IF consecutive releases are on the same GWR, ensure record is updated for each release. IF EMF 39(L) is removed from service and EMF 36(L) is used to monitor the release, ensure EMF inoperable date and time on GWR record is consistent with TSAIL. Not Applicable (N/A) may be used on this record.
Note 3 EMF 36(L) Trip 1 and 2 setpoints are per OPS Setpoint Log. During normal IP operation EMF 36(L) setpoints are NOT required to be reset.
Note 4 Volume for each IP release = Find Integrator Reading x 100

Termination of GWR release acknowledged by Shift Supervisor or Designee (signature required) _____ Date/Time _____ / _____

MODIFIED - McGUIRE 2002 NRC

Bank Question: 479.I **Answer: B**

1 Pt(s)

Unit 1 is in the process of making a radioactive gaseous waste release from the waste gas decay tank in accordance with OP/0/A/6200/18 (Waste *Gas Operation)*. Given the following conditions:

- MRIRR = 31 CFM
- MOSRR = 40 CFM
- **1EMF-50** *(WASTE* GASDZSCH) **trip** 1 setpoint = 2.0E5 CPM
- 1EMF-50 **trip** 2 = 3.0E5 CPM
- 1EMF-36 *(UNIT VENT GAS)* is in service

Time		**0215**	**0230**	**0245**
Release rate (CFM)	30	32	41	27
EMF-50 (CPM)	2.8E5	3.2E5	3.1E5	4.2E5

If the operators reset 1EMF-50 whenever allowed by procedure, what is the earliest time that the operators **are required** to terminate (and not immediately restart) the gaseous release?

A. 0200

B. 0215

C. 0230

D. **0245**

Distracter Analysis:

A. Incorrect: - neither Trip 2 nor MRIRR exceeded at 0200.
Plausible: If candidate thinks Trip 1 is sufficient to terminate.

B. Correct: the release rate (32 CFM) > MRIRR (3I CFM) (most restrictive instantaneous release rate)

C. Incorrect: - exceeded MRIRR at 0215.
Plausible: - exceeded MOSRR (maximum observed system release rate) - if the candidate thinks he/she *can* reset EMF-50 once before being required to terminate the release - this is the 2nd time EMF-50 has reached trip 2.

D. Incorrect: - exceeded MRIRR at 0215
Plausible: - exceeded **trip** 2 on **EMF-50** for the 3rd time - allowed to reset this **trip** 2 times before terminating release

Level: SRO Only; 10CFR55.43(B)(4)

KA: SYS 073A4.01(3.9/3.9)

Lesson Pian Objective: WE-KGR SEQ **5**

Source: Mod; Ques_**479,** McGuire NRC 2000

Level of knowledge: analysis

References:
1. QP-MC-WE-RGR page 15

RETDAS <DPCCNS Rev.0.0> VSSI

GASEOUS PRE-RELEASE PERMIT REPORT

GWR Number:
Release ID: Waste Gas Decay Tank "C"

=== RECOMMENDED FLOWRATES (cfm) ===

	1 Units Releasing 2/2 Station Limit (U=1)	2 Units Releasing 1/2 Station Limit (U=2)
Total body dose release rate (cfm)	4.52E+05	2.26E+05
Skin and Gamma air dose release rate (cfm)	1.12E+05	5.58E+04
Food, Qround, Inhalation dose release rate (cfm)	5.00E+01	2.50E+01

Most restrictive release rate (cfm) ..... 2.50E+01
Recommended release rate ..... 2.50E+01

=== MULTIPLE RELEASE CALCULATION ===

Sum of calculated release rats divided by allowable releass rate for all concurrent releases 6.35E-03

=== SETPOINT DATA ===

EMF50L monitor Operable?	Yes
EMF50L Entered Background (cpm)	4.00E+03
EMF50L Expected (cpm)	3.12E+04
EMF36L Monitor Operable?	NA
EMF36L Entered Background (cpm)	NA
EMF36L Expected (cpm)	NA
Xe-133 Equivalence (uCi/cc)	3.12E-04
Trip 1 Setpoint (cpm)	9.13E+04
Trip 2 Setpoint (cpm)	1.30E+05

Duke Power Company **Catawba** Nuclear Station	Procedure No. HP/0/B/1004/034 Revision No. 007
RADIOACTIVE WASTE GAS (WG) SYSTEM RELEASE	
Reference Use	Electronic Reference No. CN005CUC

PERFORMANCE

Radioactive Waste Gas (WG) System Release

1. Purpose

- To provide a method of preparing a gaseous waste release package and to describe the method of calculating the gaseous waste release rate to be used when making a Gaseous Waste Release (GWR) from the WG system during normal plant conditions.
- To provide actions for EMF50L upon notification of inoperability/operability.

2. References

2.1 HP/0/B/1000/010 - Determination of Radiation Monitor Setpoints

2.2 HP/0/B/1001/018 – RP Compliance Sampling

2.3 SH/0/B/2001/004 - Investigation of Unusual Radiological Occurrences

2.4 Catawba Nuclear Station, Liquid and Gaseous Radwaste Computer Program User Documentation

3. Limits and Precautions

None.

4. Procedure

4.1 Use of Procedure

NOTE:
- Staff Support Scientist or designated Qualified Reviewer may authorize operation outside the scope and acceptance criteria stated in this procedure provided the technical basis and impact to existing procedure 10CFR50.59 evaluation is clearly documented an applicable paperwork.
- If original 10CFR50.59 evaluation is affected, another evaluation must be performed.

4.1.1 Notify Operations Shift Manager immediately of any inadvertent (uncontrolled) gaseous effluent **release.**

4.1.2 Refer to SH/0/B/2001/004 (Investigation of Unusual Radiological Occurrences) for notification process following any inadvertent (uncontrolled) gaseous waste release.

4.2 Sampling **of** WGDT-C

4.2.1 WHEN notified by Chemistry, collect samples per HP/0/B/1001/018 (RP Compliance Sampling).

4.2.2 Review completed WGDT-C sample results

4.2.3 Maintain **results** for use with GWR process.

4.3 Determination **of** Release Monitor **for** GWR

4.3.1 **IF** **EMF** 50L is operable, obtain **EMF** 50L background reading (existing reading).

- Ensure background reading (existing reading) is **less** than 20,000 cpm.

4.3.2 **IF** monitor background (existing reading) is ≥ 20,000 cpm, declare EMF50L inoperable.

- Generate work request for IAE to decontaminate EMF.
- Notify Radwaste Chemistry personnel of actions taken.
- Complete Section 4.7

4.3.3 **IF** EMF50L is inoperabie, use 1EMF36L as controlling monitor for release.

A. Ensure 1EMF36L background reading (existing reading) is Less than 1000 cpm.

- **IE** 1EMF36L background (existing reading) is ≥ 1000 cpm, discontinue release process.

B. Obtain 1EMF36L Trip 2 and Trip 1 setpoints. ✓

4.4 Generate GWR Permit Report (Pre-Release)

4.4.1 Start RETDAS Launcher for data entry.

4.4.2 Verify GWR number assigned by RETDAS is next consecutive number.

4.4.3 Input assigned GWR number in LWR/GWR Logbook.

4.4.4 Compiete remaining required entries.

- Refer as necessary to RETDAS Computer Program User Documentation.

NOTE: "Multiple Release Calculation" (MRC) is performed by RETDAS to account for multiple releases in progress and to ensure no release limits are exceeded. MRC uses data from all open GWR Pre-Release packages. ***MRC*** sums the "recommended release rate" for each open GWR and ratios to the allowable release rate of the GWR Pre-Release currently being created. An information "box" opens to notify the user when **the** ratio is >0.9.

4.4.5 **IF** MRC is > 0.9, notify RP Staff Support and/or RP Supervision before continuing GWR Pre-Release process.

4.4.6 Select "Instructions" on RETDAS to print information automatically on GWR Pre-Release Permit report.

4.4.7 Ensure release data is correct on screen

4.4.8 Print report.

4.4.9 Compiete "Performed by" signature and "Date" blocks.

4.4.10 Perform verification of information by another qualified technician.

- Complete "Verified by" signature/date block.

4.4.11 Make copy of GWR Pre-Release Report.

- Maintain with original Count Room sample analysis results in Compliance Lab while GWR is active.

4.4.12 Ensure GWR package contains the following:

- Sample analysis results
- Working copy of Chemistry procedure
- Reports forms generated by RETDAS
- Additional information as needed for release

4.4.13 Deliver GWR package to Control Room.

4.4.14 **WHEN** notified by Chemistry, record initiation, suspension and/or termination of WGDT GWR in RP Shift Compliance Logbook.

4.5 RP Response to Trip 2 Alarms

4.5.1 **IF** notified of Trip 2 Alarm, ensure setpoints **are** correct.

4.5.2 Notify RP Supervision for approval to **re-start** release.

4.5.3 **IF** release is not re-started, go to Section 4.6.

4.6 GWR Closed Permit

NOTE: Performance of RETDAS Closed Permit shall be accomplished by RP Staff Support or qualified RP Compliance Technicians.

4.6.1 Review GWR package.

A. Verify isotope name and concentration of computer inputs.

B. Verify background value is acceptable per Section 4.3.

C. **IF** Trip **2** alarm(s) occurred during release, determine actual duration time:

1. Add total time between initiations and suspensions of release.

2. Determine calculated stop time of release by adding actual duration time of release to initial **start** time of release:

   Example: 9-1-99/2103 plus 80 minutes gives calculated stop time of 9-1-99/2223.

3. Enter calculated stop on RETDAS Closed Permit screen.

4.6.2 Perform find review of GWR package.

4.6.3 File GWR in RP Satellite master file.

4.6.4 Discard duplicate copy of GWK maintained in RP Compliance Lab.

4. RP Ac ıons for Inoperabie **EMF50L**

4.7.1 **WHEN** EMF50L is declared inoperabie, complete applicable sections of EMF **50L** Inoperable Status Log Sheet (Enclosure **5.1).**

- Place Inoperable Status Log Sheet in EMF Status Logbook.

4.7.2 **WHEN** EMF 50L is declared operable, perform the following:

A. Determine/verify EMF SOL setpoints per HP/0/B/1000/010 (Determination of Radiation Monitor Setpoints).

B. Document setpoints on Enclosure 5.1.

C. Complete "Notified Operable" section.

4.8 Record Retention

4.8.1 Maintain the following documents in RP Satellite Master File:

- GWR Release Paperwork
- Enclosure 5.1

5. Enclosures

5.1 EMF SOL Inoperable Status Log Sheet

5.2 Sample of RETDAS Gaseous Waste Release Permit Reports

Enclosure 5.1
EMF 50L Inoperable Status Log Sheet

UNIT #: 1 EMF #: 50L Waste Gas Dischg NOTIFIED INOPERABLE PER_____

LOCATION Elev. 594. Col.JJ-KK, 49-50 DATE/TIME:_____

WORK REQUEST #:_____ RP TECHNICIAN NOTIFIED: _____

REASON FOR INOPERABILITY:_____

NOTIFIED OPERABLE PER:_____ DATE/TIME: _____/_____

DETERMINED SETPOINTS (CPM): TRIP 2 = _____ TRIP 1 = _____

SETPOINTS PROVIDED TO: _____ GROUP/SECTION: _____

COMPLETED BY: _____ DATE/TIME: _____/_____
RP TECHNICIAN

RETDAS <DPCCNS Rev.0.0> VSSI

GASEOUS PRE-RELEASE PERMIT REPORT

GWR Number:
Release ID: Waste Gas Decay Tank "C"
Release nods: Batch
Permit Status: P - Pre-Release

Comments:

=== RELEASE DATA ==========
EMF50L Monitor In Service ..... YES

=== NUCLIDE DATA - INITIAL SAMPLE ==========

Nuclide	uCi/cc	EC	EC Ratio
KR-85	5.29E-04	1.00E-04	5.29E+00
XE-133	1.33E-04	1.00E-04	1.33E+00
F&AG	6.62E-04		6.62E+00
Total:	6.62E-04		6.62E+00

Bank Question: 478.I **Answer: A**

1 Pt(s)

Unit 1 is responding to a faulted steam generator from 100% power. Given the following events at their respective times:

- 0200 - a reactor trip occurred, the crew entered E-0, ***(Reactor Trip or Safety Injection)***
- 0220- transitioned to E-3, ***(Steam Generator Tube Rupture)***
- 0215 - entered FR-Z.1, ***(Response to High Containment Pressure),*** on a valid orange path
- 0220- safety injection was actuated manually after a failure of auto S/I
- 0225 - completed FR-Z.1

If the SRO determined that they were responding to the event in the wrong procedure, which one of the following statements is correct regarding the earliest time the SRQ could transition to ES-0.0, (*Rediagnosis*)?

A. The SRO can enter ES-0.0 at 0211.

B. The SRO can enter ES-0.0 at 0216.

C. The SRO can enter ES-0.0 at 0221.

D. The SRO can enter ES-0.0 at 0226.

Distracter Analysis: A faulted S/G has caused containment pressure to rise to 3 psig. Safety injection has failed to actuate in auto. The SRQ implements E-3 instead of E-2. He recognizes that E-3 is not the right procedure – so he wants to go to ES-0.0 (*Rediagnosis*). ES-0.0 does not apply if safety injection has not actuated – but administratively, you can enter ES-0.0. Step 2 will verify that SI has actuated and kick you out of ES-0.0 if SI has not yet actuated.

A. Correct: ES-0.0 can be entered after completion of E-0.

B. Incorrect: - Can enter ES-0.0 after completion of E-0 – also cannot enter ES-0.0 until FR-Z.1 has been completed.
Plausible: - if candidate notes SI has not actuated and thinks that he/she ES-0.0 cannot be entered until SI has actuated.

C. Incorrect: - ES-0.0 can be entered any time after completion of E-0.
Plausible: - if candidate notes that ES-0.0 is applicable only after SI actuation and does not know that FR-Z.1 must be completed.

D. Incorrect: - ES-0.0 can be entered any time after completion of E-0.
Plausible: - if candidate thinks that ES-0.0 is not applicable until after SI has actuated and cannot leave FR-Z.1 until completed.

Level: SRQ Only 10CFR55.43(b)5

KA: WE01 EA2.2(1)(3.2/4.0)

Lesson Plan **Objective:** CSF Obj: 1, EP1 Obj: **19**

Source: Mod Catawba Audit Exam *2000*

Level of **knowledge: comprehension**

References:
1. OP-CN-EP-EPI **page** *6*
2. ES-0.0 **Background** Document **step 2 page** *2*
3. OMP 1-7 **page** 11
4. ES-0.0 **step** 2 **page 2**

OBJECTIVES

	Objective	ISS	NLO	LPRO	LPSO	STA	PTRQ
1	Explain the Rules of Usage for Critical Safety Function (CSF) status tree procedures per OMP 1-7			X	X	X	X
2	Explain the priority system associated with the CSF status trees as seen on the SPDS portion of the OAC			X	X	X	X
3	State the purpose of the ND FLOW and RADIATION SPDS blocks			X	X	X	X
4	Explain how the OAC is used to provide information about any CSF status tree			X	X	X	X
5	Explain the use of EP/1/A/5000/F-0 (Critical Safety Function Status Trees) to determine the status of all CSFs			X	X	X	X
6	Describe the validation process for CSF status trees per OMP 1-7 (Emergency/Abnormal Procedure Implementation Guidelines') (**NOTE**: For PTRQ this objective applies to SROs only)				X	X	X
7	Given a set of specific plant conditions and required procedures, apply the rules of usage and outstanding PPRBs to identify the correct procedure flowpath **and necessary actions**			X	X	X	X

	Objective	ISS	NLO	LPRO	LPSO	PTRQ
16	Explain the bases of Enclosure 1 (Foldout Page) actions of EP/1/A/5000/ES-0.2 (Natural Circulation Cooldown).			X	X	X
17	Explain the bases of Enclosure 1 (Foldout Page) actions of EP/1/A/5000/ES-0.3 (Natural Circulation Cooldown with Steam Void in Vessel (with RVLIS)).			X	X	X
18	Explain the Bases, including any identified knowledges/abilities, for all of the steps, notes, and cautions in EP/1/A/5000/E-0 (Reactor Trip or Safety Injection).			X	X	X
19	Explain the Bases, including any identified knowledges/abilities, for all of the steps, notes, and cautions in EP/1/A/5000/ES-0.0 (Rediagnosis).			X	X	X
20	Explain the Bases, including any identified knowledges/abilities, for all of the steps, notes, and cautions in EP/1/A/5000/ES-0.1 (Reactor Trip Response).			X	X	X
21	Explain the Bases, including any identified knowledges/abilities, for all of the steps, notes, and cautions in EP/1/A/5000/ES-0.2 (Natural Circulation Cooldown)			X	X	X
22	Explain the Bases, including any identified knowledges/abilities, for all of the steps, notes, and cautions in EP/1/A/5000/ES-0.3 (Natural Circulation Cooldown with Steam Void in Vessel (with RVLIS)).			X	X	X
23	Given a set of specific plant conditions and all required procedures, use the rules of usage and outstanding PPRBs to identify the correct procedure flowpath.			X	X	X

1. EP/1/A/5000/E-0 (Reactor Trip or Safety Injection)

1.1 Major Action Step Summary

A. Verify automatic actions as initiated by the Protection and Safeguards Systems - Following entry into this procedure, the operators verify reactor trip, turbine trip, and essential power available. If S/I was not required, a transfer is made to E§-0.1. If S/I was required, the operators proceed to verify proper equipment alignments. Additional safeguards equipment is verified as the system setpoint is reached.

B. identify appropriate optimal recovery guideline - This begins the first attempt to identify an appropriate recovery guideline.

C. Shutdown unnecessary equipment and continue trying to identify appropriate recovery guideline - If S/I cannot be terminated and diagnosis has not been determined, the operators continue evaluating plant conditions.

1.2 Use the most current retype to explain the purpose, symptoms, and immediate actions of E-0.

1.3 Use the "Enhanced Background Document" to explain the bases for all steps, notes, cautions, and Enclosure 1 actions.

2. EP/1/A/5000/ES-0.0 (Rediagnosis)

2.1 Major Action Step Summary

A. Determine if any S/Gs are **not** faulted - Attempts to diagnose a faulted S/G.

B. Determine if any S/G is faulted and if it was isolated - Identify any faulted S/G and see if it's isolated.

C. Determine if there is a SGTR - If not faulted or faulted and isolated, attempt to identify any S/G ruptured. If not, it must be a LOCA.

2.2 Use the most current retype to explain the purpose and symptoms ES-0.0.

2.3 Use the "Enhanced Background Document" to explain the bases for all steps, notes, cautions, and Enclosure 1 actions.

3. EP/1/A/5000/ES-0.1 (Reactor Trip Response)

3.1 Major Action Step Summary

A. Ensure the primary system stabilizes at no-load conditions - The operators verify NC temperature returns to no-load via steam dump operation. Verify, and if necessary, establish adequate shutdown margin. Check Pzr level and pressure responding correctly.

B. Ensure the secondary system stabilizes at no-load conditions -Verifies the operation of the steam dump and feed systems. S/Gs are returned to no-load level values.

STEP 2: Verify S/I - HAS ACTUATED

PURPOSE:

To remind the operator that ES-0.0 only applies when S/I is in service or is required.

APPLICABLE ERG BASIS:

The particular sequence of steps in this procedure was based on the assumption that S/I is in service or should be in service. Therefore. this procedure should be used only if S/I is in service or is required and E-0 (Reactor Trip Or Safety Injection) has been completed.

PLANT SPECIFIC INFORMATION:

KNOWLEDGE/ABILITY:

- If a valid orange path is encountered, the operator is expected to scan all of the remaining trees, and then, if no red path is encountered, to promptly implement the corresponding EP. If during the performance of an orange path procedure, any red condition or higher priority orange condition arises, then the red or higher priority orange condition shall be addressed first, and the original orange path procedure suspended.

- Once a procedure is entered due to a valid red or orange condition, that procedure shall be performed to completion unless preempted by some higher priority condition. It is expected that the actions in the procedure will clear the red or orange condition before all the operator actions are complete. However, these procedures shall be performed to the point of the defined transition to a specific procedure. At this point, any lower priority red or orange paths currently indicating or previously started but not completed shall be addressed.

- If a CSF procedure directs the operator to return to the procedure and step in effect and the Corresponding status tree continues to display the off normal condition, then the corresponding CSF procedure does not have to be implemented again since all recovery actions have already been completed. However, if the same status tree subsequently changes to a valid higher priority condition, then the corresponding CSF procedure shall be implemented as required by its priority.

- Certain CSF procedures are used to address both orange and red path conditions for the same parameters. If the procedure is already in progress due to the orange path condition, it is not required to return to the first step if the condition becomes red. Also, at the completion of the procedure, the procedure does not have to be implemented again, since all recovery actions have already been implemented.

ACTION/EXPECTED RESPONSE	RESPONSE NOT OBTAINED

C. Operator Actions

__ 1. **Monitor Enclosure I (Foldout Page).**

__ 2. **Verify S/I - HAS ACTUATED.**

__ **RETURN TO procedure and step in effect.**

3. **IF any of the following procedures are in effect, THEN RETURN TO procedure and step in effect:**

- EP/1/A/5000/E-0 (Reactor Trip Or Safety Injection)

OR

__ • EP/1/A/5000/ECA-0.0 (Loss Of All AC Power)

OR

__ • EP/1/A/5000/ECA-0.1 (Loss Of All AC Power Recovery Without S/I Required)

OR

__ • EP/1/A/5000/ECA-0.2 (Loss Of All AC Power Recovery With S/I Required)

OR

__ • Any Critical Safety Function procedure.

MODIFIED: CATAWBA AUDIT 2000

Bank Question: 478 ***Answer: D***

---

1 Pt(s)

Unit 1 is responding to **a** reactor trip from 100% power. Given the following events and conditions:

- 0200 - **a** reactor trip occurred, SRO entered E-0
- 0210- transition4 to ES-0.1, ***Reactor Trip Recovery***
- 0215- entered FR-Z.2, ***Containment Flooding,*** on **a** valid orange path
- 0216 - safety injection actuated
- 0220 - completed FR-Z.2

If the SRO determined that they were responding to the event in the wrong procedure, which one of the following statements **is** correct regarding the appropriate action to take to transition to ES-0.0, *Rediagnosis*?

A. **The SRO can enter to ES-0.0 at any time during the event based solely upon SRO judgement**

B. **The SRO can enter ES-0.0 between 0210 and 0215 or after 0220**

C. The **SRO can enter ES-0.0 after 0216**

D. The **SRO can enter ES-0.0 after 0220**

Distracter Analysis:

A. **Incorrect:** - cannot enter ES-0.0 while in E-0 or while in FR-Z.2. ES-0.0 is only applicable after SI actuates
Plausible: - if candidate does not know restrictions and applicability of ES-0.0

B. **Incorrect:** - cannot enter ES-0.0 while in ES-0.1 because ES-0.0 is not applicable until after SI actuation
Plausible: - if candidate does not know that ES-0.0 is applicable only after SI actuation

C. **Incorrect:** - cannot enter ES-0.0 while **in** PR-Z.2
Plausible: - if candidate notes SI has actuated and does not know that he/she must complete FR-Z.2 before ES-0.0 can be entered

D. **Correct answer**

Bank Question: 357 **Answer: C**

1 Pt(s) ~~Unit 1 is responding to~~ a main steam line break ~~into~~ in Unit 1 containment, [illegible]

A

Given the following events and conditions:

- The operators completed E-0 ***(Reactor Trip and Safety Injection)*** arid transitioned to E-2 ***(Faulted Steam Generator Isolation)***
- **A** RED **PATH** on Containment Integrity occurred and the operators transitioned to FR-Z.1 (*Response to* ***High Containment Pressure)*** at step 8 of E-2.
- **A** RED PATH on NC Integrity occurred and the operators transitioned to FR-P.1 (*Response* to ***Imminent Pressurized Thermal Shock Condition)*** from step 4 of FR-Z.1.
- The operators performed all required actions in FR-P.1
- Upon completion of FR-P.1, the **STA** reports that **all** CSFs are now GREEN (including Containment Integrity).

Which one of the following describes the correct procedure flow path?

A. Return to E-2 step 1 and continue.

B. Return to E-2 step 8 and continue.

C. Return to FR-Z.1 step **4** and complete the procedure, then return to E-2 step 8.

D. Enter ES-0.0 (*Rediagnosis*) and rediagnose the situation.

Distracter Analysis:

A. Incorrect: Must address FR-2.1 first
Plausible: since all CSFs are green, the candidate may feel a return to step 1 is appropriate

B. Incorrect: Must address FR-Z.1 first
Plausible: this would be correct if Z.1 had been completed.

C. Correct: per OMP 1-7, once a procedure is entered due to a valid red or orange condition, **that** procedure shall be performed to completion unless preempted by some higher priority condition. It is expected that the actions in the procedure will clear the red or orange condition before all the operator actions are complete. However, these procedures shall be performed to the point of the defined transition to **a** specific procedure. At this point, any lower priority red or orange paths currently indicating or previously started but not completed shall be addressed.

D. Incorrect: Have specific guidance to return to FR-Z.1

Plausible: the operator can use rediagnosis at any time, hut the CSP would not be addressed as required.

Level: SRO Only 10CFR55.43(b)2

KA: APE 069 G2.4.4 (4.0/4.3)

Lesson Plan Objective: FRZ Obj: 5

Source: Bank

Levei of knowledge: comprehension

References:
1. OMP 1-7 page 13

OBJECTIVES

	Objective	ISS	NLO	LPRO	LPSO	PTRQ
1	State the purpose of Function Restoration procedures: EP/1/A/5000/FR-Z Series - Containment			X	X	X
2	State the Bases for all NOTES and CAUTIONS in each of the Function Restoration procedures: EP/1/A/5000/FR-Z Series - Containment			X	X	X
3	Explain the Bases for the Major Actions of each of the Function Restoration procedures: EP/1/A/5000/FR-Z Series - Containment			X	X	X
4	Explain the Bases for all steps in each of the Function Restoration procedures: EP/1/A/5000/FR-Z Series - Containment			X	X	X
5	Given a set of specific plant conditions and required procedures, apply the rules of usage and outstanding PPRBs to identify the correct procedure flowpath and necessary actions			X	X	X

- Yellow path procedures are to be performed concurrent with the non-critical safety function EP in effect when the yellow path **is** implemented. While performing the actions of the yellow path, continuous actions or foldout page items of the non-critical safety function EP in effect are still applicable and shall be monitored by the operator. (DW-95-043)

- If a red or orange condition indicates and then clears prior to implementation of the corresponding procedure, the procedure shall not be performed. The **CSF** procedure is considered to be "implenicnted" when **the** procedure reader reads the first step to the crew.

- The STA shall keep the Operations Shift Manager informed of all off normal CSFs. The Operations Shift Manager shall ensure the crew is updated as appropriate, typically by allocating time during updates for the STA. (SOER 94-1)

F. Normally, the condition of the CSF Status Trees is continuously displayed by SPDS on the **OAC.** Control room indications shall be used to validate any off normal alarm and to determine which procedure to implement. Once status tree monitoring is initiated, the STA should periodically monitor the status trees and compare against control board indications to ensure SPDS is functioning properly. Status tree monitoring shall be continuous if an orange or red condition exists. Otherwise, monitoring frequency shall be every **10** to 20 minutes. (SOER 94-1)

Bank Question: 339.2 **Answer: D**

---

1 Pt(s) E-3 (Steam Generator Tube Rupture) step 18 reads as follows:

> ***WHEN "P-11 PZR S/I BLOCK PERMISSIVE" status light (1SI-18)*** is ***lit, THEN:***
>
> ____***a. Depress*** *ECCS* ***Steam Pressure*** *"BLOCK" pushbuttons*

Pressurizer pressure **is** 1985 psig when the SRO transitions to ECA-3.1.

After the transition into ECA-3.1, which one of the following statements is correct with regard **to** this step?

A. The step is applicable only while in E-3. The SRO shall not return to the step when notified that permissive status light is LIT.

B. The step is applicable **only** while in E-3. The RO shall immediately perform the actions of sub step 18a, only after reentering E-3 upon completion of ECA-3.1.

C. The step is applicable while in E-3 and after transition to ECA-3.1 until alternative guidance is provided. The RO shall immediately perform the actions of sub step 18a when the permissive status light is LIT and report this action **to** the SRO.

D. The step is applicable while in E-3 and after transition **to** ECA-3.1 until alternative guidance is provided. The RO shall notify the SRO that the permissive status light is LIT and the SRO **will** return to step 18a and direct the action.

Distracter Analysis:

A. Incorrect: the step is applicable in E-3 and after transition out of E-3 until alternative guidance is provided
Plausible: partially correct – page-keeping requirement is correct.

B. Incorrect: the step is applicable in E-3 and after transition out of E-3 until alternative guidance is provided – RO must notify the SRO to return to the step and receive direction to implement sub-step 18a.
Plausible: If the candidate does not know the process for conditional steps, this is reasonable and similar to foldout page actions.

C. **Incorrect**: RO must notify the SRQ to return to **the** step and receive direction to implement sub-step 18a.

Plausible: this is reasonable and similar to foldout page actions.

D. **Correct** Answer:

Level: SRO Only 10CFR55.43(b)5

KA: **APE** 038 G 2.4.6 (3.1/4.0)

Lesson Plan Objective: EP-INTRO Obj: 2, 3

Source: Mod; Ques_339, Catawba NRC 2000

Level **of** howledge: memory

References:
1. OP-CN-EP-INTRO page 8
2. OMP 1-7 page 7-8
3. **E-3** step 18 page 17

OBJECTIVES

	Objective	ISS	NLO	LPR	LPSO	PTRQ
1	Define the terms listed in the DEFINITIONS section of OMP 1-7.	X	X	X	X	
2	Explain the rules of usage of two column format procedures.	X	X	X	X	
3	Explain the rules of usage of continuous action steps.	X	X	X	X	X
4	State when **ACC** conditions are used.			X	X	X
5	Explain why **ACC** values are used.			X	X	X
6	Explain the purpose of the "red film" on the monitor light panel.			X	X	X
7	Explain how Enclosure 1 (Foldout page) is used.			X	X	X
8	State the two entry points into the EPs.			X	X	X
9	Explain the rules of usage for APs including concurrent use of EPs and APs.	X	X	X	X	X
10	Explain the rules for deviation from approved procedures.	X	X	X	X	X
11	Explain the rules for situations not covered by procedures.	X	X	X	X	X
12	Explain the rules for communications and control room team guidance.			X	X	X
13	Explain the "General Statements of Philosophy".	X	X	X	X	X
14	State when a unit trip **must** be investigated and any exceptions to NSD 505.				X	X
15	State who is responsible for notifying station supervision **of** a reactor trip.				X	X
16	State the requirements that must be met prior to plant restart				X	X
17	State the expectations for completion of time critical operator actions.	X	X			
18	Given specific NLO EP/AP actions identify those that are time critical in nature.	X	X			
19	Summarize the potential consequences of failing to perform a specific NLO EP/AP time critical action within the time stated.	X	X			

4. EP/AP IMPLEMENTATION

4.1 OMP 1-7 (Emergency/Abnormal Procedure Implementation Guidelines) provides the rules for use and implementation for EPs and APs.

4.2 PPRBs:

A. PPRBs may also provide general and specific guidance for use and implementation of EPs and APs.

B. The PPRB process is described in OMP 4-10 (Validation Process for Operations Procedures).

5. REACTOR TRIP INVESTIGATION

Refer to current revision of NSD 505 (Reactor Trip Investigation).

6. TIME CRITICAL OPERATOR ACTIONS

6.1 Refer to PT/0/A/4700/061 (Time Critical Operator Action Review).

6.2 Expectations for performance of time critical actions (Obj. #17)

A. Operators are expected to perform time critical tasks in accordance with all established procedures and work practices. The time critical nature of the task does not preclude the need to perform the task properly and safely.

B. Inability to complete these time critical tasks within the time allotted may indicate a need to evaluate procedures and work practices or to reanalyze the event to include the actual performance time.

C. See the following table for the specific NLO tasks and consequences.

6. If desired. conditional steps (**IF**..., **THEN**...) can be evaluated by the procedure reader for applicability prior to giving a verbal command. The command should then be constructed from the statement(s) after the word **THEN**.

   Example:

   Step: IF Containment pressure has exceeded **3** psig, THEN verify Phase B Isolation actuated.

   Evaluation: Based on a previous response. or a request for verification of containment pressure status, the procedure reader determines that the step is applicable.

   Command: Verify Phase B Isolation actuated.

7. Nonsequential steps (**WHEN**..., **THEN**...) require that an action be performed after a particular event has occurred. These steps should be handled as follows:

   a. The procedure reader gives the RO a command to notify him when the particular event occurs.

   b. The procedure reader can mark the page at the nonsequential step with a "tape flag" and continue in the procedure.

   c. Upon observing the event. the RO notifies the procedure reader.

   d. The procedure reader returns to the flagged step and gives the command. The command should be constructed from the statement(s) after the word "**THEN**".

   e. The procedure reader removes the "tape flag" and checks off the step.

   Prior to branching to another procedure, the procedure in effect should be reviewed for remaining "tape flags" to ensure all required actions have been taken. Those not completed should be reviewed to determine whether they are progressing satisfactorily or if they are even pertinent to the remainder of the recovery effort.

J. The following rules of usage shall be applied to continuous action steps:

1. **"IF AT ANY TIME"** steps that require returning to and performing a particular step of a procedure shall only be applicable while that procedure is in progress.

2. **"IF AT ANY TIME"** steps that do not require performance of a particular step shall apply until the current **or** subsequent procedures provide alternate guidance.

3. **"WHEN"** steps shall apply continuously unless they are determined to not be pertinent to the recovery effort.

4. All other continuous action steps (i.e., control, monitor, maintain, etc.) shall apply until the current **or** subsequent procedures provide alternate guidance.

K. Parameter values listed in parentheses with the acronym "AGC."(Adverse Containment Conditions) shall be used when containment pressure has exceeded **3.0 PSIG.** Once containment pressure has exceeded 3.0 **PSIG,** ACC values shall be used during the remainder of the accident even if pressure subsequently decreases below 3.0 PSIG. This second setpoint is used to account for the additional error in the setpoint due to the containment environment following a high energy line break.

L. The monitor light panels are used in the EPs to verify safety components in their proper position for various phases of an accident. Certain indicating lights are misplaced and do not fit the rules of use. **These** lights are marked with red film to indicate an exception to the rules **of** use and shall be evaluated to determine if the component is in the proper position.

M. Enclosure 1 (Foldout Page) shall be delegated to at least one RO for the purpose of monitoring and reacting to various plant parameters independent of the procedure reader's guidance. Additional copies should be distributed to other crew members to aid in the monitoring.

N. General statements of philosophy for EP/AP usage are listed on Attachment 11.1 (General Statements of Philosophy).

7.2. Optimal Recovery Procedures

A. This group of event related emergency procedures (EPs) covers the diagnostic, mitigating and recovery actions for the following accidents:

- Loss of coolant accident (LOCA)
- Steam/feed line break
- Steam generator tube rupture (SGTR)
- Loss of all **AC** power

B. Entrance into this EP series is limited to the following two procedures:

- E-0 (Reactor Trip **or** Safety Injection) shall be entered when:
  - **A** reactor trip occurs or is required above P-11 .
  - **A** safely injection occurs or is required above P-11, or below P-11 with automatic S/I <u>not</u> blocked.
  - **A** safety injection occurs below P-11 with automatic S/I blocked, and entry is dictated **by** applicable procedure.
- ECA-0.0 (Loss of **All AC** Power) shall be entered if a complete loss of power on both emergency buses occurs. This includes any time during the performance of any other emergency procedure.

ACTION/EXPECTED RESPONSE	RESPONSE NOT OBTAINED
16. Verify the following valves on all ruptured S/G(s) - CLOSED: ___ • MSIV ___ • MSIV bypass valves.	Perform the following: a. Verify the following valves on at least one intact S/G - CLOSED: ___ • MSIV ___ • MSIV bypass valve. ___ b. IF at least one intact S/G cannot be isolated from all ruptured S/G(s), THEN GO TO EP/1/A/5000/ECA-3.1 (SGTR With Loss Of Reactor Coolant - Subcooled Recovery Desired).
___ 17. Verify at least one NC pump - ON.	CAUTION NC T-Cold indication in the ruptured loop may cause an invalid Integrity Status Tree condition. ___ Disregard NC T-Cold indication in the ruptured loop, until directed by this EP or until this EP is exited.
18. WHEN "P-11 PZR S/I BLOCK PERMISSIVE" status light (1SI-18) is lit, THEN: a. Depress ECCS steam pressure "BLOCK" pushbuttons. ___ b. Verify main steam isolation blocked status lights (1SI-13) - LIT. c. Maintain NC pressure less than 1955 PSIG using one of the following: ___ • Pzr spray OR ___ • Pzr PORV.	

MODIFIED: CATAWBA NRC 2000

Bank Question: 339.1 **Answer: D**

I Pt(s) E-3, (Steam Generator Tube Rupture), step #21.b reads as follows:

> ***"IF AT ANY TIME ruptured S/G(s) pressure is decreasing..., THEN perform Step 21."***

Which one of the following statements is correct with regards to this step?

A. The step is applicable continuously unless it is determined not to be pertinent to the recovery effort.

B. The step is applicable while in E 3 and after transition to subsequent procedures until alternative guidance is provided.

C. The step is only applicable until another continuous action step is reached in **E-3.**

D. The step is only applicable while in E-3.

Distracter Analysis:

A. Incorrect: step applicable only inE-3
Plausible: this is the construct for When ... then actions

B. Incorrect: step applicable only inE-3
Plausible: this is an alternate construct for If at any time actions

C. Incorrect: step applicable only inE-3
Plausible: this is the construct for generalized continuous action steps.

D. Correct:

Level: RO&SRO

KA: G2.4.19 (2.7 / 3.7)

Lesson Plan Objective: ADM-OP SEQ 21

Source: NRC Catawba Exam 97 Ques_339

Level of knowledge: memory

References:
1. OP-CN-ADM-OP page 10
2. OMP 1-7 page 7
3. EP/1/A/5000/E-3 page 22

Bank Question: 323.1 **Answer: B**

1 Pt(s)

Unit 1 is shutdown, in mode 5, following a S/G tube rupture event. Maintenance is dewatering the main condenser into a portable holdup tank outside the turbine building (for disposal offsite). Upon completion of the dewatering and piping flushes, the tank is 3/4 full. Given the following radiochemistry analysis of the tank contents:

- Total tank activity = 18 Ci with a combined half life of 8 days
- Tritium activity = 1 Ci with a half life of 12.6 years
- Noble gas activity = 6 Ci with a half life of 48 hours

Which one of the following action(s) (if any) meets plant requirements for these conditions, with the minimum risk of further contamination?

REFERENCES PROVIDED: SLC 16-11.17

A. Immediately move the tank into the turbine building.

B. Stop all additions of radioactive material into the tank and allow the contents to decay to within limits.

C. Reduce the tank contents by transferring radioactive material back to the condenser.

D. No action is required at this time.

Distractcr Analysis: SLC 16-11.17 requires a maximum of 10 Ci in an outside tank, exclusive of tritium and noble gases. This tank has 11 Ci, but the non-tritium/noble gas contribution is decaying at a rate of more than 1Ci/24 hrs. Thus after 48 hours, the total activity = 18-1-7= 11-2=9 Ci

A. Incorrect: Moving the tank does not provide spill/overflow protection and risks further contamination by spillage.
Plausible: Moving the tank indoors technically meets the SLC requirement.

B. Correct: Within 48 hrs the tank will be within the SLC limit.

C. Incorrect: Transferring water back to the condenser would recontaminate it and risk spillage.
Plausible: This is a possible option to meet the SLC requirement, and could be chosen if the candidate cannot determine the decay rate of the tank.

D. Incorrect: Must at least suspend additions to the tank.
Plausible: If the candidate miscalculates the non-tritium/noble gas contribution.

Level: SRO Only 10CFR55.43(b)4

✓ KA: G2.3.3(1.8/2.9)

Lesson Plan Objective: WE-WL Obj: **16**

Source: Bank

Level of knowledge: analysis

References:
1. OP-CN-WE-WL **page 22**
2. SLC 16.11-17 pages 1-2 - PROVIDED

	Objective	ISS	NLO	LPRO	LPSO	PTRQ
15	Discuss the operation of NCDT for: • Normal and refueling alignment • Changing the cover gas					X
16	Given a set of specific plant conditions and access to reference materials, determine the actions necessary to comply with Tech Specs/SLCs			X	X	X
17	Given appropriate plant conditions, apply limits and precautions associated with related station procedures.	X	X	X	X	X

16.11 RADIOLOGICAL EFFLUENTS CONTROLS

16.11-17 LIQUID HOLDUP TANKS

COMMITMENT:

The quantity of radioactive material contained in each temporary unprotected outdoor tank shall be limited to less than or equal to 10 Curies, excluding tritium and dissolved or entrained noble gases.

APPLICABILITY:

At all times.

REMEDIAL ACTION:

With the quantity of radioactive material in any of the above tanks exceeding the above limit, immediately suspend all additions of radioactive material to the tank, within **48** hours reduce the tank contents to within the limit, and describe the events leading to this condition in the next Radioactive Effluent Release Report. pursuant to Technical Specification 5.6.3.

TESTING REQUIREMENTS:

The quantity of radioactive material contained in each of the above tanks shall be determined to be within the above limit by analyzing a representative sample of the tank's contents at least once per **7** days when radioactive materials are being added *to* the tank.

REFERENCES:

1. Letter from NRC to Gary R. Peterson, Duke, Issuance of Improved Technical Specifications Amendments for Catawba, September 30, 1998.

2. Technical Specification 5.5.12, Explosive Gas and Storage Tank Radioactivity Monitoring Program.

BASES:

The tanks included in this COMMITMENT are all those outdoor radwaste tanks that are not surrounded by liners, dikes or walls capable of holding the tank contents and

16.11 RADIOLOGICAL EFFLUENTS CONTROLS

16.11-17 LIQUID HOLDUP TANKS

COMMITMENT:

The quantity of radioactive material contained in each temporary unprotected outdoor tank shall be limited to less than or equal to 10 Curies, excluding tritium and dissolved or entrained noble gases.

APPLICABILITY:

At all times.

REMEDIAL ACTION:

With the quantity of radioactive material in any of the above tanks exceeding the above limit, immediately suspend all additions of radioactive material to the tank, within **48** hours reduce the tank contents to within the limit, and describe the events leading to this condition In the next Radioactive Effluent Release Report, pursuant to Technical Specification 5.6.3.

TESTING REQUIREMENTS:

The quantity of radioactive material contained in each of the above tanks shall be determined to be within the above limit by analyzing a representative sample of the tanks contents at least once per 7 days when radioactive materials are being added to the tank.

REFERENCES:

1. Letter from NRC to Gary R. Peterson, Duke, Issuance of Improved Technical Specifications Amendments for Catawba, September 30, 1998.

2. Technical Specification 5.5.12, Explosive Gas and Storage Tank Radioactivity Monitoring Program.

BASES:

The tanks included in this COMMITMENT are all those outdoor radwaste tanks that are not surrounded by liners, dikes or walls capable of holding the tank contents and

BASES (con't)

that do not have tank overflows and surrounding area drains connected to the Liquid Radwaste Treatment System.

Restricting the quantity of radioactive material contained in the specified tanks provides assurance that in the event of an uncontrolled release of the tank's contents, the resulting concentrations would be less than the limits of 10 CFR Part 20, Appendix 5, Table II, Column **2,** at the nearest potable water supply and the nearest surface water supply in an UNRESTRICTED AREA.

D. S.L.C. 16.11-2- Radioactive liquid effluent monitoring instrumentation.

E. S.L.C. 16.11-3 Dose - Limits quarterly and yearly dose to members of the Public at all times.

1. Quarterly

a) Less than or equal to 1.5 mrem whole body

b) Less than or equal to 5 mrem any organ

2. Yearly

a) Less than or equal to 3 mrem whole body

b) Less than or equal to 10 mrem any organ

F. S.L.C. 16.11-4 Liquid Radwaste Treatment System shall be operable when the liquid effluent, from each unit, to unrestricted areas would exceed 0.06 mrem whole body or 0.2 mrem to any organ in a 31 day period.

G. S.L.C. 16.11-7 Radioactive Gaseous Effluent Monitoring Instrumentation. Table 16.11-5.

H. S.L.C. 16.11-17 Liquid Holdup Tanks - The quantity of radio-active material contained in each temporary unprotected outdoor tank shall be limited to less than or equal to 10 Curies, excluding tritium and dissolved or entrained noble gases at all times.

I. Design Basis Specifications – WL

1. ND/NS Sump Pumps and level switches are safety related, and are required to be operable. At least 2 pumps shall be operable at all times.

2. CAPT Sump Pumps (1A and 2A) are also safety related. If either of these sump pumps are inoperable, then the CAPT is declared inoperable and the SSF is placed in degrade.

2.6 Annunciator Response (Obj. #11) - Refer to actual Annunciator Response for current and complete actions and information.

2.7 Review Limits and Precautions (Obj. #17).

A. OP/0/B/6500/014 (Operations Liquid Waste Release)

B. OP/1/A/6500/009 (Miscelianeous Equipment Brains to WL System)

C. OP/1/A/6500/014 (Operations Controlled Liquid Waste Systems)

3. Summary

3.1 Review Objectives

Bank Question: 096.1 **Answer: B**

1 Pt(s) Unit 1 is operating in mode 3 preparing for a reactor startup following a refueling outage. Given the following events and conditions:

- NC Pump 1C is running.
- Reactor **trip** breakers are tagged open.
- Maintenance determines that the MOV test **data** from the outage indicates that the torque switches for 1ND-65B (*ND TRAIN 1B HOT LEG INJ ISOL*) have been set too low.
- The SWM requests OSM approval to tag closed 1ND-65B for **repairs**

Which one of the following statements correctly describes the operating restrictions and implications of tagging closed 1ND-65B?

REFERENCES PROVIDED: - Tech Spec's w/ Bases 3.4.5, 3.4.6, 3.5.2

A. **1ND-65B** may be tagged closed for 72 hours, if the steam generator in the running NC loop is operable.

B. **1ND-65B** may not be tagged closed because this would make both trains of ND inoperable.

C. **1ND-65B** may not be tagged closed, unless two NCPs are running with operable steam generators.

D. **1ND-65B** may be tagged closed, if **1ND-65B** is restored to operation prior to transitioning to mode 2.

Distracter Analysis:

A. Incorrect: Both trains of ND will be inoperable.
Plausible: If the candidate assumes 1 S/G and the A ND loop.

B. Correct: **ND-65** prevents ND flow to all 4 loops.

C. Incorrect: Both trains of **ND** will be inoperable.
Plausible: If the candidate focuses only on decay heat removal.

D. Incorrect: Both trains of ND will be inoperable.
Plausible: If the candidate assumes that one ND train is sufficient In mode 3.

Level: SRO **Only** 10CFR55.43(b)2

KA: *G* 2.2.24(2.6/3.8)

Lesson Plan Objective: PS-ND SEQ 11

Source: Bank Catawba NRC 2000

Level of knowledge: **comprehension**

References:
1. OP-CN-PS-ND **pages 12.18**
2. **Tech Spec** & **Bases 3.4.5** - PROVIDED
3. **Tech Spec** & **Bases 3.4.6** -**PROVIDED**
4. **Tech Spec** & Bases **3.5.2** - PROVIDED

	Objective	ISS	NLO	LPRO	LPSO	PTRQ
10	Describe ND system operations • Describe ND system startup • Describe ND system operation in parallel mode • Describe establishing pressurizer spray from the ND system • Describe ND system shutdown and standby alignment			X	X	X
11	Given a set of plant conditions and access to reference materials, determine the actions necessary to comply with Tech Specs/SLC's.			X	X	X
12	State from memory all Tech Spec actions for the applicable systems, subsystems and components which require remedial action to be taken in less than 1 hour.			X	X	X

Time: 2.0 hours

c) Local Temperature indication downstream of ND Hx (NDT 5020, 5030)

5. Flow Indications (Obj. #8)

a) Downstream of ND Hx's (NDFT 5180.5190)

1) Indication in C/R (MC-11) for Cold legs flow A&B (C&D)

2) Used for auto control of NB Hx Bypass valves

I. NV System letdown Isolation ND-24A (58B)

1. Motor-operated, normally closed

2. Supplies letdown from NB to NV

3. Operated from MC-11 (Obj. #8)

J. Discharge Paths

1. ND Injection to the Cold legs. A & B (C & D)

a) Train cross ties. ND-32A (65B) (Obj. #8)

1) Motor operated gate valves

2) Normally open, to ensure flow to all four cold legs (FSAR Commitment) even if one train fails

3) Close during recirculation phases following a LOCA.

b) Containment Isolation valves NI-173A (1788) with 3 position select switch. (Obj. #8)

1) Normally opened with power removed to ensure injection Row; DISCONNECT positron.

2) Throttle position was added for use as a means of controlling ND flow in the event normal flow control is lost (loss of VI) during partial drain operations which would cause ND-26 & SO to fail open resulting in vortexing.

3) In the ENABLE position the valves will open or close without throttle capability.

c) Flow limiting orifices in discharge line to each Cold Leg to balance Row during injection.

d) Flow indication provided in C/R.

e) Annunciator, AD-9, for "ND TRN A(B) to NC C-LEGS LOOPS C-D(A-B) LO FLOW set at 1050 gpm and ND pump running (time delay keeps alarm functional two (2) minutes following breaker trip.

9 Discharge relief set at 600 psig relieves to the Recycle Holdup Tank.

1) To protect against backleakage from the NC system through the discharge flowpath check valves.

2) Design analysis has shown that ND flow through the hot leg injection header is not required to dilute the boron concentration at the top of the core. One NI pump injecting to its respective hot legs provides sufficient flow to perform this task.

3) The shift to hot leg recirculation for the NI train will ensure that heat removal from this upper area of the core is accomplished and the boron concentration is diluted...

4) The ND system will be aligned for hot leg recirculation only if flow cannot be established from at least one NI train.

5) The NV pumps continue to discharge to the cold legs to ensure sufficient core cooling in the event of a hot leg break.

b) Hot leg recirc. transfer is made with the NI or ND pumps running

c) Procedure Summary

1) NI Pumps are aligned for Hot Leg Recirculation

2) If flow is verified from at least one train of the NI system the operators are directed to return to the procedure and step in effect.

3) If flow is not verified from at least one train of the NI system, the ND pumps will be aligned for Hot Leg Recirculation as follows:

(a) Verify the ND loop suction isolations and the crossover isolations to the cold legs are closed.

(b) Open the hot leg injection isolation

(c) For any ND train not aligned for auxiliary containment spray, dose the cold leg isolation and open the associated crossover isolation valve.

(d) Ensure monitor light panel in correct alignment for hot leg recirculation and return to procedure and step in effect.

d) Hot leg recirculation flow is to NC loops "B" and "C" from the ND system.

e) The ND pumps will continue to supply the NV and NI pump suction.

2.4 Technical Specifications (Obj. #11 & #12)

A. 3.4.6 RCS Loops – Mode 4

B. 3.4.7 RCS Loops – Mode 5, Loops Filled

C. 3.4.8 RCS Loops – Mode 5, Loops Not Filled

D. 3.5.2 ECCS-Operating

E. 3.5.3 ECCS-Shutdown

3.5 EMERGENCY CORE COOLING SYSTEMS (ECCS)

3.5.2 ECCS—Operating

LCO 3.5.2 Two ECCS trains shall be OPERABLE'.

APPLICABILITY MODES 1, 2, and 3.

---NOTE---
In MODE 3, both safety injection (SI) pump flow paths may be isolated by closing the isolation valves for up to 2 hours to perform pressure isolation valve testing per SR 3.4.14.1

ACTIONS

CONDITION	REQUIRED ACTION	COMPLETION TIME
A. One or more trains inoperable. AND At least 100% of the ECCS how equivalent to a single OPERABLE ECCS train available.	A.I Restore train(s) to OPERABLE status.	72 hours'
B. Required Action and associated Completion Time not met.	B.1 Be in MODE 3. AND B.2 Be in MODE 4.	6 hours 12 hours

*For each ECCS train on Unit 2, the Completion Time that one ECCS train can be inoperable as specified by Required Action A.1 may be extended beyond the 72 hours up to 288 hours as part of the NSWS system upgrades. System upgrades include maintenance and modification activities associated with cleaning of NSWS piping, valves and branch line?, necessary repairs and/or replacement, valve repair and/or replacement, and replacement of portions of the NSWS piping io the AFW system. Upon completion of the cleaning. upgrades, and system restoration in refueling outage 1EOC12, this footnote is no longer applicable.

3.4 REACTOR COOLANT SYSTEM (RCS)

3.4.6 RCS Loops — MODE 4

LCO 3 4 6 Two loops consisting of any combination of RCS loops and residual heat removal (RHR) loops shall be OPERABLE, and one loop shall be in operation

NOTES----------

1. All reactor coolant pumps (RCPs) and RHR pumps may be de-energized for ≤ 1 hour per 8 hour period provided:

   a. No operations are permitted that would cause reduction of the RCS boron concentration: and

   b. Core outlet temperature is maintained at least 10°F below saturation temperature.

2. No RCP shall be started with any RCS cold leg tsmperature ≤ 285°F unless the secondary side water temperature of each steam generator (SG) is ≤ 50°F above each of the RCS cold leg temperatures.

APPLICABILITY MODE 4

ACTIONS

CONDITION	REQUIRED ACTION	COMPLETION TIME
A. One RCS loop OPERABLE. AND Two RHR [oops inoperable.	A.I Initiate action to restore a second loop to OPERABLE status.	Immediately

ACTIONS (continued)

CONDITION	REQUIRED ACTION	COMPLETION TIME
B. One RHR loop OPERABLE. AND ALL RCS loops inoperable.	B 1 Be in MODE 5.	24 hours
C Both required RCS or RHR loops inoperable OR No RCS or RHK loop in operation	C 1 Suspend all operations involving a reduction of KCS boron concentration AND C.2 Initiate action to restore one bop io OPERABLE status and operation.	Immediately Immediately

SURVEILLANCE REQUIREMENTS

SURVEILLANCE		FREQUENCY
SR 3.4.6 1	Verify one RHR or RCS loop is in operation.	12 hours
SR 3.4.6.2	Verify SG secondary side water levels are ≥ 12% narrow range for required RCS loops.	12 hours
SR 3.4.6.3	Verify correct breaker alignment and indicated power are available to the required pump that is not in operation.	7 days

3.4 REACTOR COOLANT SYSTEM (RCS)

3.4.5 RCS Loops — MQDE 3

LCO **3.4.5** Three RCS loops shall be OPERABLE. and either:

a. Three RCS loops shall **be** in operation when the Rod Control System is capable of rod withdrawal; or

b. One RCS loop shalt be in operation when the Rod Control System is not capable of rod withdrawal.

NOTE----------

All reactor coolant pumps may **be** de-energized for ≤ 1 hour per 8 hour period provided:

a. **No** operations are permitted that would cause reduction of the RCS boron concentration; and

b. Core outlet temperature is maintained at least 10°F below saturation temperature.

APPLICABILITY: MQDE 3

ACTIONS

CONDITION	REQUIRED ACTION	COMPLETION TIME
A. Qne or two required RCS loop(s) inoperable.	A.1 Restore required RCS loop(s) to OPERABLE status.	72 hours
B. Required Action and associated Completion Time of Condition **A** not met.	B.1 Be in MODE **4.**	**12** hours

(continued)

ACTIONS (continued)

CONDITION	REQUIRED ACTION	COMPLETION TIME
C. One or two required RCS loop(s) not in operation and Rod Control System capable of rod withdrawal.	C.1 Restore required RCS loop(s) to operation.	1 hour
	OR	
	C.2 De-energize all control rod drive mechanisms (CRDMs).	1 hour
D. Three required RCS loops inooerable.	8.1 De-energize all CRDMs	Immediately
	AND	
OR	D.2 Suspend all Operations involving a reduction of RCS boron concentration.	Immediately
No RCS loop in operation	AND	
	0.3 Initiate action to restore one RCS loop io OPERABLE status and operation.	Immediately