REF. 8,37

MOL.19971006.0075

CRWMS/M&O

Design Analysis Cover Sheet

Complete only applicable items.

1. QA: L

2. DESIGN ANALYSIS TITLE Waste Package Design Basis Events			
3. DOCUMENT IDENTIFIER (Including Rev. No.) BBA000000-01717-0200-00037 REV00			4. TOTAL PAGES 69
5. TOTAL ATTACHMENTS 9	6. ATTACHMENT NUMBERS - NO. OF PAGES IN EACH See Section 9 for attachment numbers and page count. 120 total attachment pages.		
	Printed Name	Signature	Date
7. Originator	J. R. Massari/S. H. Levinson	Also for S.H. Levinson	4/18/97
8. Checker	L. E. Booth	L. E. Booth	4/18/97
9. Lead Design Engineer	P. Gottlieb	P. Gottlieb	4/18/97
10.QA Manager	O. J. Gilstrap	O. J. Gilstrap	4/18/97
11. Department Manager	Hugh A. Benton	Hugh A. Benton	4/18/97

12. REMARKS

Initial Issue JM 4/18/97

Attachments IV and VII, and Sections 7.2.2.6.1 and 7.2.2.8.1 prepared by S. H. Levinson.
All other sections prepared by J. R. Massari.

Mair/Jegy - xd

MOL.19971006.0075

CRWMS/M&O

Design Analysis Cover Sheet

Complete only applicable items.

(1.) QA: L

2. DESIGN ANALYSIS TITLE Waste Package Design Basis Events			
3. DOCUMENT IDENTIFIER (Including Rev. No.) BBA000000-01717-0200-00037 REV00			4. TOTAL PAGES 69
5. TOTAL ATTACHMENTS 9	6. ATTACHMENT NUMBERS - NO. OF PAGES IN EACH See Section 9 for attachment numbers and page count. 120 total attachment pages.		
	Printed Name	Signature	Date
7. Originator	J. R. Massari/S. H. Levinson	Also for S.H. Levinson	4/18/97
8. Checker	L. E. Booth	L. E. Booth	4/18/97
9. Lead Design Engineer	P. Gottlieb	P. Gottlieb	4/18/97
10.QA Manager	O. J. Gilstrap	O. J. Gilstrap	4/18/97
11. Department Manager	Hugh A. Benton	Hugh A. Benton	4/18/97

12. REMARKS

Initial Issue 4/18/97

Attachments IV and VII, and Sections 7.2.2.6.1 and 7.2.2.8.1 prepared by S. H. Levinson.
All other sections prepared by J. R. Massari.

Design Analysis Revision Record

Complete only applicable items.

1.

2. DESIGN ANALYSIS TITLE	
Waste Package Design Basis Events	
3. DOCUMENT IDENTIFIER (Including Rev. No.)	
BBA000000-01717-0200-00037 REV00	
4. Revision No.	5. Description of Revision
00	Initial Issue

1. Purpose 5

2. Quality Assurance 5

3. Method 6

4. Design Inputs 7
4.1 Design Parameters 7
4.1.1 Internal and External Event Definition 7
4.1.1.1 Waste Package Functions 7
4.1.1.2 WP Related External Events 8
4.1.1.3 WP Related Internal Events 8
4.1.2 External DBE Information 9
4.1.2.1 Seismic Activity, Subsurface Fault Displacement 9
4.1.2.2 Seismic Activity, Earthquake 9
4.1.3 Internal DBE Information 12
4.1.3.1 Fuel Assembly Handling Experience 12
4.2 Criteria 14
4.3 Assumptions 15

5. References 22

6. Use of Computer Software 27

7. Design Analysis 28
7.1 External Events Applicable To WP Design 28
7.1.1 Initial Screening of External Events 28
7.1.2 Extreme Weather Fluctuations 31
7.1.3 Seismic Activity, Earthquake 31
7.1.4 Seismic Activity, Subsurface Fault Displacement 32
7.1.5 Static Fracturing/Rockfall 33
7.2 Internal Events Applicable To WP Design 34
7.2.1 Internal Events Associated with Normal Operations 34
7.2.1.1 Dead Loads 34
7.2.1.2 Live Loads 35
7.2.1.3 Internal Pressure Loads 35
7.2.1.4 Thermal Loads 36
7.2.2 Internal Events Associated with Equipment Failure/Operator Error 37
7.2.2.1 Falling Objects 37
7.2.2.1.1 WF drop onto WP during loading 37
7.2.2.1.2 Handling equipment drop onto WP 38
7.2.2.1.3 Section of emplacement drift concrete liner falls onto WP 39

7.2.2.1.4 Emplacement drift gantry drops a WP onto another WP 40
7.2.2.2 WP Drop Events 40
7.2.2.2.1 WP vertical drop from DC cell crane 41
7.2.2.2.2 WP horizontal drop from WHB gantry 41
7.2.2.2.3 WP rail car rolls out of transporter 42
7.2.2.2.4 Emplacement drift gantry drops WP 42
7.2.2.2.5 WP vertical/horizontal drop onto sharp object (puncture hazards) 43
7.2.2.3 WP Tip-Over and Slap Down 44
7.2.2.4 Collisions and Transporter Accidents 45
7.2.2.4.1 WP collides/bumps other WP while being placed in DC cell lag storage area 45
7.2.2.4.2 Transporter derailment 45
7.2.2.4.3 Transporter runaway 47
7.2.2.4.4 Transporter door closes onto WP 49
7.2.2.4.5 Emplacement gantry lifts WP to insufficient height, causing collision with shadow shield or other WP 49
7.2.2.5 Missiles and Explosive Overpressure 50
7.2.2.5.1 Pressurized system missile 50
7.2.2.5.2 Fire/Hydrogen explosion from transporter locomotive batteries 51
7.2.2.6 Fire and Other Thermal Hazards 52
7.2.2.6.1 WP loaded with WF that exceeds its thermal design basis (thermal misload) 52
7.2.2.6.2 Fire in DC cell 53
7.2.2.6.3 Transporter breakdown between WHB and North Portal (solar insolance) 55
7.2.2.6.4 Thermal misload of WPs within an emplacement drift 55
7.2.2.7 Fuel Rod Rupture/Internal Pressurization 56
7.2.2.8 Criticality Safety 57
7.2.2.8.1 WP loaded with WF that exceeds its criticality design basis 57
7.2.2.8.2 WP flooding due to decon unit failure or pipe break 59
7.2.2.9 Through-Wall Manufacturing Defect 59
7.3 Identification of Bounding Design Basis Events 62

8. Conclusions 67

9. Attachments 69

1. Purpose

This analysis is prepared by the Mined Geologic Disposal System (MGDS) Waste Package Development (WPD) department to provide an initial assessment of internal (normal sequences of operations, mechanical or other failures, and operator error) and external (natural phenomena and man-made events not initiated by MGDS operations) design basis events (DBEs) which may affect the waste package (WP) during the preclosure phase of the MGDS. The objective of this evaluation is to define these events and their relevant parameters through review of the Preliminary MGDS Hazards Analysis (PHA), Nuclear Regulatory Commission (NRC) Standard Review Plans for similar types of facilities (Ref. 5.19), and current surface and subsurface design information provided by the Repository Design Department. The results will be a bounding list of credible WP preclosure design basis events for Viability Assessment (VA) design. Evaluation of the effects of the WP DBEs identified in this analysis on the performance of the WP will be performed in subsequent structural, thermal, or criticality design analyses. Future evaluation of accident scenarios and event sequence frequencies by the Repository Surface or Subsurface Design groups may supersede the initial estimates of this analysis.

2. Quality Assurance

The Quality Assurance (QA) program applies to this analysis. The work reported in this document is part of the preliminary WP design analysis that will eventually support the License Application Design phase. This activity, when appropriately confirmed, can impact the proper functioning of the Mined Geologic Disposal System waste package; the waste package has been identified as an MGDS Q-List item important to safety and waste isolation (pp. 4, 15, Ref. 5.1). The waste package is on the Q-List by direct inclusion by the Department of Energy (DOE), without conducting a QAP-2-3 evaluation. As determined by an evaluation performed in accordance with QAP-2-0, *Conduct of Activities*, the work performed for this analysis is subject to *Quality Assurance Requirements and Description* (QARD; Ref. 5.3) requirements. Although a documented evaluation is not required by the current revision of QAP-2-0, the WPD responsible manager has selected the applicable procedural controls for this activity commensurate with the work control activity evaluation entitled *Perform Probabilistic Waste Package Design Analyses* (Ref. 5.2).

All design parameters and asumptions which are identified in this document are for preliminary design and shall be treated as unqualified data; these design parameters and assumptions will require subsequent qualification (or superseding inputs) as the WP design proceeds. This document will not directly support any construction, fabrication or procurement activity and therefore is not required to be procedurally controlled as TBV (to be verified). In addition, the inputs associated with this analysis are not required to be procedurally controlled as TBV. However, use of any data from this analysis for input into documents supporting procurement, fabrication, or construction is required to be controlled as TBV in accordance with the appropriate procedures.

3. Method

The method used for this analysis involves the following four steps:

1. Review the PHA (Ref. 5.5) to identify internal and external events which have the potential for adversely affecting the performance of the WP. Other sources of information on the repository surface and subsurface design may also be used in the identification, screening, and characterization of internal events. In addition, the NRC Standard Review Plans for dry storage casks (Ref. 5.19) provides guidance on the types of events which are expected to be evaluated in a licence application.

2. Events are screened for applicability to waste package design. An event may be screened from further consideration if it meets one of the following criteria:

   A) The event was screened in the PHA (Ref. 5.5). The PHA screened some external events from further consideration because they were either not applicable to the Yucca Mountain site, or were not applicable to the preclosure phase of the MGDS. The basis for screening any given external event is provided in the PHA and will not be repeated here.

   B) The event cannot directly affect the performance of the WP. This may be because the WP is contained within another system, which is designed to withstand the event, or the event results in the disruption of a service that is not required by the WP to continue to perform its functions.

   C) The event has an estimated frequency of occurrence of less than 10^{-6} events per repository year (same as calander years for this analysis). Events with frequencies less than this are not considered credible and are screened from further consideration. The basis for this frequency limit is discussed in Section 4.2.

3. Events which are not screened from further consideration under item 2 are described in detail and/or characterized to identify the parameters necessary to perform the subsequent analyses to determine the effect of the event on WP performance. In addition, the general type of analysis that will be required (structural, thermal, or criticality) to determine the effect of the event is identified.

4. Similar events from item 3 are grouped for the purpose of identifying a bounding event for each group.

Further detail on the specific methods employed for each step is available in Section 7 of this analysis.

4. Design Inputs

All design inputs are for preliminary design; these design inputs will require subsequent qualification (or superseding inputs) before this analysis can be used to support procurement, fabrication, or construction activities.

4.1 Design Parameters

4.1.1 Internal and External Event Definition

4.1.1.1 Waste Package Functions

In order to identify the type of design analysis which must be performed to evaluate the effects of a given DBE, the WP function(s) which may be affected by the event must be identified. The *MGDS Functional Analysis Document* (FAD; Ref. 5.9) provides a listing of the functions which have been allocated to the WP (note that all types of WPs have the same set of functions allocated to them). The functions listed in the FAD are hierarchal in nature, and consist of high level functions which have been decomposed to more specific lower level functions. In the case of the WP, the list of functions allocated to the WP includes both high and low level functions. However, since all of the high level WP functions have been decomposed to more detailed lower level functions, only the lowest level functions will be considered in this analysis. The lowest level functions allocated to the WP, a brief description of each function, and the type of analysis which must be performed to determine if a given DBE will cause functional failure is provided in Table 4.1.1-1.

Table 4.1.1-1. Functions Allocated to the Waste Package

Function No.	Function	Description	Type of DBE Design Analysis Required
1.4.5.1.1.1	Prevent Criticality	self-explanatory	criticality
1.4.5.1.1.2	Minimize Mobilization During Confinement	maintain configuration of waste form and cladding by controlling internal temperatures	thermal
1.4.5.1.2.1	Maintain Structural Integrity	maintain structural integrity of WP and waste form during handling and emplacement operations	structural
1.4.5.1.2.2	Maintain Material Integrity	limit corrosion of WP and WF	N/A - corrosion of WP insignificant during preclosure

4.1.1.2 WP Related External Events

The *Preliminary MGDS Hazards Analysis* (PHA, Ref. 5.5) identified a generic list of external events, and eliminated from further consideration those events which were not applicable to the Yucca Mountain site, or which were the result of long-term processes not applicable to the preclosure phase of repository operations. This generic external event list, as well as an indication of the events screened by the PHA, is contained in Section 7.1, Table 7.1-1, where further screening according to Section 3, Item 2B is also performed. To avoid duplication of information, it will not be repeated here. Section 4.1.2 contains further information on events not eliminated by the Section 7.1 screening process.

4.1.1.3 WP Related Internal Events

Two prior reports, the PHA (Ref. 5.5) and the *WP Off-Normal and Accident Scenario Report* (Ref. 5.14) reviewed the *MGDS ACD Report* (Ref. 5.6) and identified WP related internal events resulting from failures of handling equipment and/or operator error. These reports will serve as the starting point for this analysis. However, since the preparation of these two reports, some aspects of the MGDS Viability Assessment (VA) design have evolved away from the concepts presented in the *MGDS ACD Report.*

The *Waste Handling Systems Configuration Analysis* (Ref. 5.7) has further refined the Waste Handling Building (WHB) design to optimize it for a waste stream which is primarily uncanistered fuel (as opposed to the mostly canistered fuel *MGDS ACD Report* assumption) and evaluated the merits of a wet versus dry system for unloading incoming spent nuclear fuel (SNF) transportation casks and lag storage of SNF. However, other than a modification to the layout of the disposal container cell, and the elimination of one of the two gantries in the *MGDS ACD Report* WHB design, there is very little change in the processes for loading, closing, and preparing the WP for emplacement. Information from Reference 5.7, Sections 7.2.3 and 7.7, will be used as necessary to modify/update the initial list of WP related internal events presented below.

Similarly, the MGDS subsurface facility design will also differ somewhat from that presented in the *MGDS ACD Report.* While a shielded transporter is still used for transporting the WP from the WHB to the emplacement drift, and a rail car is still used for moving the WP into and out of the transporter, the WPs will be emplaced on pedestals (Ref. 5.21, Key 066) rather than the rail cars of the ACD design. A gantry will be used to lift the WP off of the rail car at the emplacement drift entrance, move it into position in the drift, and place it on the pedestals. The gantry will also have the capability to emplace/retrieve one WP over another (Ref. 5.17). In addition, the maximum emplacement drift diameter has been increased from 5 m to 5.5 m, with a 200 mm thick concrete liner (Ref. 5.58, Attachment II Figures 14 and 15). Preliminary sketches of the WP support layout are included in Attachment I. This information will be used as necessary to modify/update the initial list of WP related internal events presented below. Since these subsurface design changes are currently considered preliminary, and the QAP 3-9 analyses justifying/documenting them

have not yet been completed, it will be assumed for this analysis that they will be carried to completion for VA design. This is assumption 4.3.2

Table 4.1.1-2 summarizes the WP related internal events identified in the previous two documents (Refs. 5.5 and 5.14). New events resulting from the above mentioned design changes for VA are also included (indicated by an "X" in the "New for VA" column) with an indication of the basis for the event. The specific section where each event is discussed in more detail, is indicated in the "Discussion Section" column. These detailed sections will be used to group similar events, and summarize relevant parameters for the event, or provide a basis for eliminating the event from further consideration due to one of the criteria listed in Section 3, Items 2B or 2C. Events which are no-longer applicable due to one of the above mentioned design changes will be designated by a not applicable (N/A) in the "Discussion Section" column and a basis in the remarks section.

4.1.2 External DBE Information

This section contains input information for some of the external WP DBEs not screened in Section 7.1.1.

4.1.2.1 Seismic Activity, Subsurface Fault Displacement

Table 4.1.2-1 below provides currently available information on fault displacement magnitudes and recurrence rates that was presented in Appendix D of the seismic design input document for the Exploratory Studies Facility (Ref. 5.18). This data should be considered preliminary, as design basis fault displacement data for MGDS design will not be available until fiscal year (FY) 98 (Ref. 5.24, p. 1-4). Additional data on the Solitario Canyon fault was also obtained from Table 4.7.3 of Reference 5.27.

Table 4.1.2-1. Fault Displacement Information

Fault	Solitario Canyon (Ref. 5.27, Tbl. 4.7.3)	Bow Ridge (Ref. 5.24, p. 1-4)	Ghost Dance (Ref. 5.24, p. 1-4)
Maximum Displacement Per Event	130 cm	28 cm	4 cm
Annual Probability of Surface Faulting	2.9×10^{-5} to 1×10^{-5}	1×10^{-4} to 1×10^{-5}	1×10^{-5} to 3.3×10^{-6}

4.1.2.2 Seismic Activity, Earthquake

Key Assumption 064 (Ref. 5.21) indicates that the parameters necessary for evaluating the effects of ground motion on systems for VA should be obtained from Reference 5.18. Peak ground accelerations and velocities from Reference 5.18, and their associated probability of being exceeded are provided in Table 4.1.2-2 below.

Table 4.1.1-2. Initial List of WP Related Internal Events

Internal Event	Ref. 5.5	Ref 5.14	New for VA	Discussion Section	Remarks
1. Waste form (WF) drop onto WP during loading	X	X		7.2.2.1	Only SNF considered in this analysis.
2. WP loaded with WF(s) that exceed the criticality design basis (crit. misload)			X	7.2.2.8	Ref. 5.27 indicates there will be multiple SNF WP designs, each with a different design basis fuel
3. WP loaded with WF(s) that exceed the thermal design basis (thermal misload)			X	7.2.2.6	Ref. 5.27 indicates there will be multiple SNF WP designs, each with a different design basis fuel
4. WP vertical drop from Disposal Container (DC) cell crane	X	X		7.2.2.2	
5. WP slap down following drop, seismic event, or collision with other WP	X	X		7.2.2.3	
6. WP horizontal drop from WHB gantry	X	X		7.2.2.2	
7. WP vertical/horizontal drop onto sharp object	X	X		7.2.2.2	
8. WP collides/bumps other WP while being placed in DC cell lag storage area	X			7.2.2.4	
9. Handling equipment drops onto WP	X	X		7.2.2.1	
10. Pressurized system missile	X	X		7.2.2.5	
11. Welder burns through to WF	X			N/A	WHB laser welder eliminated from VA design
12. Flooding due to decon unit failure or pipe break	X	X		7.2.2.8	
13. Fire in DC cell	X	X		7.2.2.6	
14. Transporter derailment	X	X		7.2.2.4	
15. Transporter runaway	X	X		7.2.2.4	
16. WP rail car rolls out of transporter	X	X		7.2.2.2	

Table 4.1.1-2. Initial List of WP Related Internal Events

Internal Event	Ref. 5.5	Ref 5.14	New for VA	Discussion Section	Remarks
17. Section of emplacement drift concrete liner falls onto WP			X	7.2.2.1	Ref. 5.16 & 5.17 show concrete lined drifts for VA design
18. Steel set drop onto WP	X	X		N/A	VA design uses concrete liner rather than steel sets for emplacement drift ground support.
19. Transporter door closes onto WP	X			7.2.2.4	
20. Loss WP rail car restraint in sloped emplacement drift	X			N/A	Emplacement rail cars eliminated for VA design
21. Fire/hydrogen explosion from transporter locomotive batteries	X			7.2.2.5	
22. Emplacement drift gantry drops WP onto WP supports, shadow shield, or other WP			X	7.2.2.1 & 7.2.2.2	Ref. 5.17 discusses gantry emplacement and shadow shield at drift entrance.
23. Emplacement rail car collision with emplacement locomotive	X			N/A	Emplacement rail cars and locomotives eliminated from VA design (Ref. 5.17)
24. Emplacement gantry lifts WP to insufficient height, causing collision with shadow shield or other WP			X	7.2.2.4	Ref. 5.17 discusses gantry emplacement and shadow shield at drift entrance.
25. Rockfall	X	X		N/A	Discussed as an external event in Section 7.1.5.
25. Internal pressurization resulting from rupture of fuel rods		X		7.2.2.7	
26. Through-wall manufacturing defect			X	7.2.2.9	Previously unpublished estimate
27. Normal surface and subsurface operations	X	X		7.2.1	
28. Transporter breakdown between WHB and North Portal (Solar Insolance)			X	7.2.2.6	
29. Thermal misloading of WPs within an emplacement drift			X	7.2.2.6	

Table 4.1.2-2. Ground Motion Severity vs. Frequency

Annual Exceedance Probability	Peak Ground Acceleration (g)	Peak Velocity (cm/s)
$2x10^{-3}$	0.19	11
$1x10^{-3}$	0.27	16
$5x10^{-4}$	0.37	23
$1x10^{-4}$	0.66	46

4.1.3 Internal DBE Information

4.1.3.1 Fuel Assembly Handling Experience

Number of Fuel Assembly Drops at Commercial Reactors

Two sources of information on fuel related handling accidents were searched to obtain data on fuel assembly drops at commercial reactors: *Fuel Performance Annual Reports* (Ref. 5.15 Vols. 6-9) and *Licensee Event Reports* (LERs) required under 10CFR50.73. Only fuel drops which occurred during intentional handling of the assemblies were counted. A total of 26 drops (18 irradiated, 8 unirradiated) were identified in the period between 1970 and 1991. Data for the 1992 to 1996 time frame are not yet available due to the lag time between the occurrence of the event and the completion of the reporting process. Further details on the drop events identified is contained in Attachment II.

Minimum Number of Fuel Assembly Handlings

In general, a fuel assembly is handled a minimum of 5 times at the reactor site prior to irradiation. These handlings include:

1. The fuel assembly is removed from the shipping container at the reactor site;
2. The fuel assembly is moved to an inspection station;
3. The fuel assembly is placed in the spent fuel pool storage rack;
4. The fuel assembly is moved to the fuel transfer mechanism;
5. The fuel assembly is placed into the core.

Once the fuel assembly has completed its first cycle and is irradiated, the number of handlings is dependent on the individual utility's core loading practices. In general, two types of core loading practices exist, full core unloading and partial unloading with shuffling. The latter involves unloading those fuel assemblies which have completed their third cycle, shuffling the remaining fuel to new positions, and loading fresh fuel. The former obviously involves removing the entire core from the reactor vessel, and has been adopted by several utilities because it has been found to be quicker than shuffling. A full core unloading requires a total of 10 handlings. These are:

1. The fuel assembly is moved from the core to the transfer mechanism at the end of the first cycle;
2. The fuel assembly is moved to the spent fuel pool storage rack;
3. The fuel assembly is moved back to the transfer mechanism;
4. The fuel assembly is moved to its second cycle position in the core;
5. The fuel assembly is moved to the transfer mechanism at the end of the second cycle;
6. The fuel assembly is moved to the spent fuel pool storage rack;
7. The fuel assembly is moved back to the transfer mechanism;
8. The fuel assembly is moved to its third cycle position in the core;
9. The spent fuel assembly is moved to the transfer mechanism at the end of the third cycle;
10. The spent fuel assembly is moved to the spent fuel pool storage rack.

If the utility practices shuffling, only four handlings are required (4, 8, 9, & 10). A recent NRC survey (Ref. 5.28) found that out of the 110 commercial nuclear power plants in the U.S., 29 plants practiced shuffling, with the remainder performing full core off-loads during refueling.

Number of Discharged and Incore Fuel Assemblies

Reference 5.29, Table 5 indicates that 82,382 assemblies had been discharged from U.S. commercial reactors by the end of 1991. The total number of assemblies in-core in 1991 was estimated by summing the core sizes for each plant in operation in 1991, as obtained from Reference 5.29, Table 4 (see Attachment II). This indicates that in 1991 there were a total of 37,432 assemblies in-core.

4.1.3.2 Commercial Rail Accident Experience

Data on commercial rail accidents from 1975 to 1995 was obtained from *Federal Railway Administration Accident/Incident Bulletins* (Refs. 5.38 - 5.40), and is summarized in Attachments IV and VIII.

4.1.3.3 Weld Defect Depth and Frequency Data

Data on the frequency of occurrence of weld defects, and the distributions of defect depth for various thicknesses of welds was obtained from Reference 5.32, and is summarized in Attachment III.

4.1.3.4 Human Error Probabilities

Human error probabilities (HEPs) for performing various tasks were approximated from anticipated operator actions from Reference 5.52, and are discussed in Section 4.3.15 and are used in Attachment VII.

4.1.3.5 Other Information

Density of concrete	2400 kg/m^3	Ref. 5.45, back cover

4.2 Criteria

The *Engineered Barrier Design Requirements Document* (EBDRD; Ref. 5.8) contains several requirements which relate to identification of design basis events. A review of the EBDRD identified the following relevant requirements:

4.2.1 The EBDRD contains several requirements which indicate that the WP should be designed such that the occurrence of design basis events do not interfere with the performance of its safety functions, but do not place any requirements on the process of identifying design basis events. The requirements which fall into this category are:

EBDRD 3.2.1.7	EBDRD 3.2.2.6.A	EBDRD 3.2.3.3.B.4	EBDRD 3.2.4.6.A
EBDRD 3.2.4.6.B	EBDRD 3.2.5.1.3	EBDRD 3.2.6.1.A	EBDRD 3.2.6.1.B
EBDRD 3.2.6.2.1	EBDRD 3.3.1.B	EBDRD 3.7.F	EBDRD 3.7.1.E
EBDRD 3.7.1.H	EBDRD 3.7.1.2.A	EBDRD 3.7.1.3.A	EBDRD 3.7.1.3.D.

Note that EBDRD 3.2.4.6.A, EBDRD 3.7.1.3.A, and EBDRD 3.7.1.3.D have been modified in the Controlled Design Assumptions (Ref. 5.21). This analysis contributes to satisfying the above requirements by identifying bounding design basis events for WP design.

4.2.2 In addition to the above requirements, EBDRD 3.3.1.G indicates that,

"The Engineered Barrier Segment design shall meet all relevant requirements imposed by 10CFR60."

The NRC has recently revised several parts of 10CFR60 which relate to the identification and analysis of design basis events (Ref. 5.13). These changes are not reflected in the current version of the EBDRD. The following criteria are excerpted from the revised rule and are considered to have a bearing on this analysis:

4.2.2.1 From the revised 10CFR60.2 (Ref. 5.13, p. 64267):

"Design basis events means:

(1)(i) Those natural and human-induced events that are reasonably likely to occur regularly, moderately frequently, or one or more times before permanent closure of the geologic repository operations area; and

(ii) Other natural and man-induced events that are considered unlikely, but sufficiently credible to warrant consideration, taking into account the potential for significant radiological impacts on public health and safety.

(2) The events described in paragraph (1)(i) of this definition are referred to as "Category 1" design basis events. The events described in paragraph (1)(ii) of this definition are referred to as "Category 2" design basis events."

From the revised 10CFR60.131 (Ref. 5.13, p. 64269):

"(b) Protection against design basis events. The structures, systems, and components important to safety shall be designed so that they will perform their necessary safety functions, assuming occurrence of design basis events...

(h) Criticality control. All systems for processing, transporting, handling, storage, retrieval, emplacement, and isolation of radioactive waste shall be designed to ensure that nuclear criticality is not possible unless at least two unlikely, independent, and concurrent or sequential changes have occurred in the conditions essential to nuclear criticality safety. Each system must be designed for criticality safety assuming occurrence of design basis events. The calculated effective multiplication factor (k_{eff}) must be sufficiently below unity to show at least a 5 percent margin, after allowance for the bias in the method of calculation and the uncertainty in the experiments used to validate the method of calculation."

This analysis contributes to satisfying the above requirements by identifying bounding design basis events for WP design.

4.2.2.2 From the Section-by-Section Analysis of Section 60.136 (Ref. 5.13, p. 64265):

"With respect to the range of probabilities of Category 2 design basis events, the upper bound is roughly 1×10^{-2} per year (i.e., events with probabilities of occurrence greater than 1×10^{-2} per year would generally be considered to be Category 1 events)." ... "Similarly, the Commission considers that the lower bound of Category 2 design basis events is on the order of 1×10^{-6} per year (i.e., events with probabilities of occurrence less than 1×10^{-6} per year would generally be screened from further consideration due to their negligible contribution to overall risk)."

This analysis satisfies the above requirement by retaining those events which may occur with a frequency greater than or equal to 1×10^{-6} per year. This is considered conservative as the 10CFR60 credibility limit applies to entire event sequences (e.g., initiating event, WP and waste form failure, and failure of mitigating systems) rather than just the initiating events considered in this analysis. In other words, a credible initiating event for WP design may not lead to a credible release sequence for surface or subsurface design. For this reason, classification of events as Category 1 or 2 is also not performed in this document.

4.3 Assumptions

All assumptions are for preliminary design; these assumptions will require verification before this analysis can be used to support procurement, fabrication, or construction activities.

4.3.1 It is assumed that if the *MGDS Functional Analysis Document* (FAD, Ref. 5.9) has assigned a system the function of protecting other system from an event, then that (assigned) system will be required to withstand the maximum credible effects of the event. The basis for this assumption is that the objective section of the FAD indicates that the system-level functions defined therein will be used for the subsequent development of system performance requirements. This assumption will require verification, and will eventually be eliminated in some future revision of this analysis, as more detail is developed in other parts of the MGDS design. This assumption is used in Section 7.1.1 (and in Table 7.1-1).

4.3.2 It is assumed that the changes in the MGDS subsurface designs documented in References 5.16, 5.17, 5.58, and the sketches in Attachment I, will be maintained as part of the VA design. The basis for this assumption is the opening statement in Reference 5.17 which indicates these assumptions be used for in-process design analyses in late FY96 and early FY97 until the substantiating analyses are completed (such as Ref. 5.58). In addition, Key Assumption 066 (Ref. 5.21) also indicates that the gantry emplacement will be assumed for VA design. This assumption is used in Sections 4.1.1.3, 7.1.4, 7.1.5, 7.2.2.1.4, and 7.2.2.2.4.

4.3.3 It is assumed, for the purposes of evaluating the credibility of preclosure fault displacement hazards for the WP, that the WP is emplaced directly across a fault with the same or lower displacement recurrence frequency and magnitude as the Solitario Canyon fault. This is conservative because Key Assumption 023 (Ref. 5.21) indicates that there will be at least a 15 m standoff from the edge of a fault zone to the nearest emplaced WP, and therefore, a human error during emplacement (which remains undeveloped for this analysis) would have to occur for a WP to be emplaced across such a fault as is assumed above. The basis for this assumption is that the Solitario Canyon fault has the highest displacement magnitude and frequency of those listed in Table 4.1.2-1. It is further assumed that the Poisson distribution may be used to estimate the probability of multiple seismic events in a period of time given a frequency of recurrence. The basis for this is that it is a typical assumption in seismic hazard analyses (Ref. 5.24, p. 3-8). This assumption is used in Section 7.1.4.

4.3.4 It is assumed that since the manufacturing methods are similar for the outer and inner barrier of the uncanistered fuel waste container for the *cylinder within a cylinder* approach (see Ref. 5.36 for more detail), the amount of weld material required for the inner barrier can be estimated as a proportion by weld thickness of the amount of weld material required for the outer barrier. The basis for this assumption is that it is conservative because as a thinner component, the inner barrier may be fabricated with fewer sections and thus fewer welds than the thicker outer barrier. This assumption is used in Volume of Weld Material in the Waste Package section of Attachment III.

4.3.5 It is conservatively assumed, for the *cylinder within a cylinder* approach (see Ref. 5.36 for more detail), that independent inner and outer barrier breaches due to manufacturing defects will occur in locations such that the two breaches are connected via an air gap between the

two, thus creating a flowpath from the inside of the WP to the outside. Since the shrink fit process may not produce 100% contact between the two barriers, this is a conservative assumption. The basis for the assumption of independence is that the welds are produced by independent processes.

For the *weld clad inner barrier* approach, it is conservatively assumed that independent inner and outer barrier breaches due to manufacturing defects will occur in locations that are physically in the same cross-sectional area of the waste package such that a direct path out of the WP would exist. This is conservative since the probability that both an inner and outer barrier weld defect would occur in the small cross-sectional area is extremely small.

This assumption is used in Section 7.2.2.9.

4.3.6 It is assumed that the maximum internal fuel rod pressure would be 1200 psig (8.38 MPa absolute) at an average gas temperature of 125°F (51.7°C). The latter is based on the typical spent fuel pool water temperature at a nuclear power plant (Ref. 5.42, p. 9.1-7) under normal conditions, although temperatures under abnormal conditions may be as high as 155 to 190°F. The former is based on NRC Regulatory Guide 1.25 (Ref. 5.41, p. 2), which specifies the maximum pressure to be assumed in dose calculations for fuel rod ruptures in spent fuel pools. This is expected to be conservative for fuel burnups up to 54 GWd/MTU. Since the highest projected burnup is 74.6 GWd/MTU (Ref. 5.20, p. 7) an additional safety factor will be applied to the estimated pressures. This assumption is used in Section 7.2.2.7 to estimate the WP internal pressure in the event that 1%, 10%, and 100% of the fuel rods are ruptured at various temperatures.

4.3.7 It is assumed that the base materials used to manufacture the inner and outer barrier are defect free, that is, manufacturing defects only occur in the welds. This assumption is used in Section 7.2.2.9.

4.3.8 It is assumed that the undetected weld defect size distribution and density predicted by the Chapman model (Ref. 5.32) is applicable to the materials and weld processes used in the manufacture of the WP inner and outer barriers. The basis for this assumption is that the materials and weld processes used in Chapman's examples are for nuclear components, and are the same or similar to the materials used to manufacture the WP inner and outer barriers, and the WP welds will be subject to a similar degree of qualified inspections. This assumption is used in Section 7.2.2.9.

4.3.9 It is assumed that the average distance traveled by a (loaded) transporter from WHB to the emplacement drift is 5 km. This is the mean travel distance, based on Reference 5.6 (Vol. II, p. E-15) which indicates that the transporter travel distance will be 4 km to 6 km one way. This assumption is used in Sections 7.2.2.4.2 and 7.2.2.4.3.

4.3.10 It is assumed for derailment rate estimation purposes that the complexity of the transporter railway/switches is equivalent to a commercial switch yard. The basis for this assumption

is that each drift will have a switch in front of it, and there is as yet no information indicating that the switch design will be different from that used in commercial rail yards. This assumption is used in Section 7.2.2.4.2.

4.3.11 It is assumed for the purpose of calculating internal pressures, the WP internal fill gas will be at atmospheric pressure at a temperature of 25°C at the time of filling. The basis for this assumption is that the WP internal fill gas pressure has never been specified. This assumption is used in Section 7.2.1.3.

4.3.12 It is assumed that the drop rate estimated for SNF assemblies in Section 7.2.2.1 may be used as the drop frequency for other types of lifts involving the WP. The basis for this assumption is that the degree of equipment redundancy and procedural checks are expected to be comparable to other fuel handling operations. In addition, there is insufficient information available on the design and operation of these other components to allow a detailed estimate of failure to be performed. This assumption may be superseded at some point in the future by Repository Surface and Subsurface design group analyses of drop frequencies for specific pieces of equipment. This assumption is used in Sections 7.2.2.1.4, 7.2.2.2.1, 7.2.2.2.2, and 7.2.2.2.4.

4.3.13 It is assumed that the following types of transportation casks will arrive at the MGDS:

LG Gen	Large/Generic (26 PWR/61 BWR)
SM Gen	Small/Generic (12 PWR/24 BWR)
HH UCF	High Heat/Uncanistered Fuel (7 PWR/17 BWR)
HH UCF-SS	High Heat/Uncanistered Fuel/Can handle stainless steel clad fuel (7 PWR/17 BWR)
LG-ST	Large/Can handle long fuel from South Texas (12 PWR)

These are taken from Key Assumptions 001 and 002 (Ref. 5.21). The descriptions and fuel assembly heat rate limits are taken from Reference 5.49. This assumption is used in Attachment VII.

4.3.14 It is assumed that, if required, instrumentation will be used to measure the burnup of fuel assemblies that are removed from the transport casks for the purpose of verifying thermal output and reactivity. The type of measurement performed to determine burnup (bulk neutron and gamma, or specific gamma energies) is not important for this analysis. This is consistent with recommendations of Reg. Guide 3.58 (Ref. 5.51) which states that when burnup credit is taken, the amount of burnup needs to be confirmed by reactivity measurements. This is also consistent with Key Assumption 057, which burnup measurements of uncanistered SNF will be performed non-destructively if required. This assumption is used in Attachment VII.

4.3.15 It is assumed that the following human actions can occur during the fuel assembly unloading process from the transportation cask and the subsequent loading in the disposal containers

(DC). Some actions will lead to human errors. Note that whether the dry or wet waste handling system is used (Ref. 5.7), the same type of human actions must occur. These actions are assumed to occur since there have been no formal procedures developed at this time. The following four (sub)assumptions are all used in Attachment VII. The choice of HEPs from Reference 5.52 are intended to approximate whatever actions the operator will take. Since there are no written procedures to review for specific actions, the HEPs can only approximate anticipated operator actions.

a) During the removal process, the operator will need to record the assembly identification and associated heat rate and reactivity from the licensing paperwork and, if required, perform a verification measurement with a detector (Ref. 5.51, see assumption 4.3.14). It is further assumed that any mismatch in the textual information and the detector readings will immediately flag a human error or a detector error. Therefore, this is a sequence in which the discovered error will be remedied, resulting in a virtually zero probability that the incoming fuel assembly will be mischaracterized.

b) The operator determines what type of DC is to be used, selects the desired DC type (by methods unknown at this time), and positions it under a transfer port. This could result in a concept (or cognitive) human error or selection human error. The concept error would be deciding on the wrong DC type. The HEP (human error probability) is approximated by a rule-based action after a diagnosis -- from Reference 5.52 (Table 20-2), the HEP is 0.05 following an abnormal event. Since this occurs under normal operating conditions, assume the HEP at its lower bounds, 0.005 (i.e., divide by an error factor of 10). There is no unusual or stress conditions requiring an additional multiplier (in the form of a performance shaping factor).

   The other possible human error is a selection error for which the HEP is approximated by an error of commission in selecting the wrong control on a panel of similar looking controls that are arranged in well-defined functional group; the HEP is 0.001 (Ref. 5.52, Table 20-12). Any recovery action is assumed to occur during the verification step (see item (d)).

c) The operator determines what type of fuel assembly is to be loaded into the DC, selects the desired fuel assembly from the storage rack (by methods unknown at this time), and positions it over a transfer port. This could result in a concept human error or selection human error. The concept error would be deciding on the wrong DC type. The HEP are assumed to be the same as developed in item (b). Any recovery action is assumed to occur during the verification step (see item (d)).

d) The physical verification occurs after the fuel assembly is loaded in the DC. This includes verifying the fuel assembly identity (via a remote camera), and confirming the fuel assembly's characteristics and the appropriateness of the DC in which it has

been loaded. The HEP is estimated at 0.01 as failure to use written operating procedures under normal operating conditions (Ref. 5.52, Table 20-6).

4.3.16 It is assumed that when fuel assemblies with absorber rods are placed in anything but the proper waste package, this misload is immediately recoverable and corrected. The 21 Pressurized Water Reactor (PWR) waste packages that are designed to handle fuel assemblies with absorber rods are somewhat longer than the waste packages with no absorber or with absorber plates to accommodate the absorber rods at the top of the fuel assembly. This assumption is used in Attachment VII.

4.3.17 It is assumed that if a fuel assembly requires an absorber rod assembly for disposal, then the absorber rod is successfully placed in the fuel assembly immediately after retrieval from the transport cask. This is a reasonable assumption since most fuel assemblies that require an absorber rod assembly will be shipped with one, which will stay with the fuel assembly as it is removed from the transport cask, stored in the lag storage area, and loaded into a DC. This assumption is used in Attachment VII.

4.3.18 It is assumed that the likelihood of selecting an incorrect fuel assembly to load into the waste package is based on the percentage of a fuel assembly with specific characteristics from the total number of fuel assemblies to be delivered to the site over a 24 year period. This assumption is used in Attachment VII.

4.3.19 It is assumed that an average of 456 WPs will be handled each year. This is based on Key Assumption 003 (Ref. 5.21) which indicates that 10,938 WPs will be produced over a 24 year period. Based on the same assumption, it is further assumed that the average annual SNF WP production will be 201 PWR WPs per year (4820 total) and 120 BWR WPs per year (2859 total). This assumption is used in Sections 7.2.2.1.2, 7.2.2.3, 7.2.2.4.3, 7.2.2.4.5, and 7.2.2.5.1.

4.3.20 It is assumed that there will be 121,152 uncanistered fuel assemblies which require bare handling at the MGDS. The total number of assemblies is assumed to be 220,416. These amounts are based on Key Assumption 002 (Ref. 5.21). This assumption is used in Section 7.2.2.1.1.

4.3.21 It is assumed that there will be at least one 10 foot section of water pipe somewhere above an open disposal container. This assumption is based on the *MGDS ACD Report* (Ref. 5.6), which indicates that there will be HVAC equipment (which uses cooling coils and water spray) in the rooms above the loading cell (Ref. 5.6, Vol. II, pp. D-43 to D-58), and that the fire protection system will also utilize water spray (Ref. 5.6, Vol. II, p. 7-111). This assumption is used in Section 7.2.2.8.2.

4.3.22 It is assumed that the top of the shadow shield at the emplacement drift entrance will be 8 cm higher than the height of the top of the largest emplaced WP. This is based on the fact that shadow shields are typically slightly larger, in terms of cross-sectional area, than the

source being shielded. It is further assumed that the emplacement drift gantry will lift the bottom of a WP 8 cm higher than the top of the shadow shield. The basis for this assumption is engineering judgement of the distance necessary for adequate clearance based on verbal discussions with Repository Subsurface designers. This assumption is used in Sections 7.2.2.1.4 and 7.2.2.2.4.

4.3.23 It is assumed that there are no credible failure modes for the emplacement drift support other than failure due to beyond design basis seismic event. The bases for this assumption is that a search for information on failures of concrete lined tunnels in other applications (commercial rail, subway) found no events other than those related to seismic activity. Further, as Key Assumption 061 indicates that remote inspections of emplacement drifts will be performed, any significant liner degradation would probably be noted and repaired prior to failure. This assumption is used in Sections 7.1.5 and 7.2.2.1.3.

4.3.24 It is assumed that the contact area for objects falling onto the WP is the same for all objects considered. The basis for this assumption is that each of the falling objects considered in Table 7.3-1 have the potential for a point contact impact, as well as one spread over a larger area of the WP surface. This assumption is used in Section 7.3.

4.4 Codes and Standards

None used.

5. References

5.1 *Q-List*, YMP/90-55Q, REV 4, Yucca Mountain Site Characterization Project.

5.2 Activity Evaluation, *Perform Probabilistic Waste Package Design Analyses*, Document Identifier Number (DI#): BB0000000-01717-2200-00030 REV 02, CRWMS (Civilian Radioactive Waste Management System) M&O (Management and Operating Contractor).

5.3 *Quality Assurance Requirements and Description*, DOE/RW-0333P, REV 6, Department of Energy (DOE) Office of Civilian Radioactive Waste Management (OCRWM).

5.4 *Characteristics of Potential Repository Wastes*, DOE/RW-0184-R1, Volume 1, July 1992, DOE OCRWM.

5.5 *Preliminary MGDS Hazards Analysis*, DI#: B00000000-01717-0200-00130 REV 00, CRWMS M&O.

5.6 *Mined Geologic Disposal System Advanced Conceptual Design Report*, DI#: B00000000-01717-5705-00027 REV 00, CRWMS M&O.

5.7 *Waste Handling Systems Configuration Analysis*, DI#: BCBD00000-0171-0200-00001 REV 00, CRWMS M&O.

5.8 *Engineered Barrier Design Requirements Document*, YMP/CM-0024, REV 0, ICN 1, Yucca Mountain Site Characterization Project.

5.9 *Mined Geologic Disposal System Functional Analysis Document*, DI#: B00000000-01717-1708-00006 REV 01, CRWMS M&O.

5.10 *Final Design Package - Babcock & Wilcox BR-100 - 100 Ton Rail/Barge Spent Fuel Shipping Cask*, Document No. 51-1203400-01, B&W Fuel Company, November 1991.

5.11 *Pipe Failures in U.S. Commercial Nuclear Power Plants*, EPRI TR-100380, July 1992.

5.12 *Emplacement Equipment/Concept Development Report*, DI#: BC0000000-01717-5705-0015 REV 00, CRWMS M&O.

5.13 *10CFR Part 60; Disposal of High-Level Radioactive Wastes in Geologic Repositories; Design Basis Events; Final Rule*, U.S. Nuclear Regulatory Commission, Federal Register, Volume 61, Number 234, Page 64257-64270, December 4, 1996.

5.14 *Waste Package Off-Normal and Accident Scenario Report*, DI#: BBA000000-01717-5705-00008 REV 00, CRWMS M&O.

5.15 *Fuel Performance Annual Report for 1988*, NUREG/CR-3950, U.S. Nuclear Regulatory Commission.

5.16 *Waste Package Support/Invert Design (Revision: Tables in Attached Support Layout Sketches Corrected to Read "44 BWR UCF")*, Interoffice Correspondence (IOC)# LV.WP.SMB.01/97-013-B, CRWMS M&O, February 10, 1997.

5.17 *Design Assumptions for near term work*, IOC# LV.RD.DGM.09/96-051, CRWMS M&O, October 1, 1996.

5.18 *Seismic Design Inputs for the Exploratory Studies Facility of Yucca Mountain*, DI#: BAB000000-01717-5705-00001 REV 02, CRWMS M&O.

5.19 *Standard Review Plan for Dry Cask Storage Systems*, U.S. Nuclear Regulatory Commission, NUREG-1536, February 1996.

5.20 *Source Terms for Design Basis Event Analyses*, DI# BBA000-01717-0200-00019 REV 00, CRWMS M&O.

5.21 *Controlled Design Assumptions Document*, DI#: B00000000-01717-4600-0032 REV 04, CRWMS M&O.

5.22 *Preliminary Repository Layout December 1996*, Sketch M-SK-001, Batch No. MOY-970116-03.

5.23 *Assessing Reliability and Useful Life of Containers for Disposal of Irradiated Fuel Waste*, Atomic Energy of Canada Limited, AECL-8328, June 1984.

5.24 *Preclosure Seismic Design Methodology for a Geologic Repository at Yucca Mountain*, Topical Report YMP/TR-003-NP, Rev. 01, U.S. Department of Energy, October 1996.

5.25 *MGDS Repository Surface Design Response*, IOC# LV.SD.JHM.01/96.004, CRWMS M&O, January 18, 1996.

5.26 *WHB High Crane Hook Assumptions*, IOC# LV.SD.SJM.2/97-005, CRWMS M&O, February 27, 1997.

5.27 *Determination of Waste Package Design Configurations*, DI#: BBAA00000-01717-0200-00017 REV 00, CRWMS M&O.

5.28 *NRC Staff Completes Survey of Refueling Practices at Nation's Nuclear Power Plants*, NRC Press Release No. 96-74, U.S. Nuclear Regulatory Commission, May 22, 1996.

5.29 *Spent Nuclear Fuel Discharges from U.S. Reactors 1994*, SR/CNEAF/96-01, Energy Information Administration, U.S. Department of Energy, February 1996.

5.30 *Performance Assessment of the Direct Disposal in Unsaturated Tuff of Spent Nuclear Fuel and High Level Waste Owned by the US Department of Energy*, SAND94-2563, Sandia National Laboratories, March 1995.

5.31 *Total System Performance Assessment for Yucca Mountain - SNL Second Iteration (TSPA-1993)*, SAND93-2675, Sandia National Laboratories, April 1994.

5.32 Chapman, O.J.V., "Simulation of Defects in Weld Construction," *Reliability and Risk in Pressure Vessels and Piping*, American Society of Mechanical Engineers, PVP-Volume 251, July 1993.

5.33 *WP Cost Estimate Status Report*, DI#: BB0000000-01717-5703-00002 REV 01, CRWMS M&O.

5.34 *Waste Package Sizing Spreadsheet ACD Sizing, Masses, and Costing*, IOC# LV.WP.WEW.7/95-229, CRWMS M&O, July 14, 1995.

5.35 Product Handbook, Inco Alloys International, Huntington, WV, Publication No. IAI-38, 1988.

5.36 *Waste Package Fabrication Process Report*, DI#: BBA000000-01717-2500-00010 REV 01, CRWMS M&O.

5.37 *Emplacement Equipment/Concept Development Report*, DI#: BC0000000-01717-5706-00015 REV 00, CRWMS M&O.

5.38 *Accident/Incident Bulletin No. 162 Calendar Year 1993*, U.S. Dept. of Transportation, Federal Railroad Administration, June 1994.

5.39 *Accident/Incident Bulletin No. 163 Calendar Year 1994*, U.S. Dept. of Transportation, Federal Railroad Administration, August 1995.

5.40 *Accident/Incident Bulletin No. 164 Calendar Year 1995*, U.S. Dept. of Transportation, Federal Railroad Administration, August 1996.

5.41 *Assumptions Used for Evaluating the Potential Radiological Consequences of a Fuel Handling Accident in the Fuel Handling and Storage Facility for Boiling and Pressurized Water Reactors*, Regulatory Guide 1.25, U.S. Nuclear Regulatory Commission, March 23, 1973.

5.42 *Davis-Besse Nuclear Power Station No. 1, Updated Safety Analysis Report*, Volume 9, Rev. 20, Toledo Edison, December 1996.

5.43 *YMP Reference Information Base*, YMP/93-02, REV 03, Yucca Mountain Site Characterization Project.

5.44 *Engineered Barrier System Performance Requirements Systems Study Report*, DI#: BB0000000-01717-5705-00001 REV 02, CRWMS M&O.

5.45 Van Vlack, Lawrence H., *Elements of Material Science and Engineering*, Addison-Wesley Publishing Company Inc., 1989.

5.46 *Missile Generation and Protection in Light-Water-Cooled Power Reactor Plants*, Oak Ridge National Laboratory, ORNL-NSIC-22, September 1968.

5.47. Elde, S.A., Calley, M.B., "Generic Component Failure Data Base", *Proceedings of the 1993 International Probabilistic Safety Assessment Conference*, 1993.

5.48 *Aging of Class 1E Batteries in Safety Systems of Nuclear Power Plants*, NUREG/CR-4457 Rev. 1, U.S. Nuclear Regulatory Commission, July 1987.

5.49 *Design Basis Waste Stream for Interim Storage and Repository*, DI#: A00000000-01717-0200-00036 REV 00, CRWMS M&O.

5.50 *Preliminary Mined Geological Disposal System Concept of Operations*, DI#: B00000000-01717-00004 REV 00, CRWMS M&O.

5.51 *Criticality Safety for Handling, Sorting, and Transporting LWR Fuel at Fuels and Materials Facilities*, Regulatory Guide 3.58, NRC, October 1986.

5.52 Swain, A. D. and Guttman, H. E., *Handbook of Human Reliability Analysis with Emphasis on Nuclear Power Plant Applications*, U.S. Nuclear Regulatory Commission, NUREG/CR-1278, August 1983.

5.53 *Fire Risk Scoping Study: Investigation of Nuclear Power Plant Fire Risk, Including Previously Unaddressed Issues*, NUREG/CR-5088, U.S Nuclear Regulatory Commission, January 1989.

5.54 *Preliminary Design Report - Large MPC Transportation Cask Subsystem Volume 3*, Doc. No. MPC-NC-02-016, Westinghouse Government and Environmental Services Company, September 30, 1996.

5.55 *Redundant Design Feature Modifications and Safety Evaluation for the Reactor Building Crane System at the Monticello Nuclear Generating Plant*, Licensing Report NSC-LS&R-NOR-0151-17, Nuclear Services Corporation, October 20, 1976.

5.56 *Review of Proposed Dry-Storage Concepts Using Probabilistic Risk Assessment*, EPRI NP-3365, Electric Power Research Institute, February 1984.

5.57 *Seismotectonic Framework and Characterization of Gaulting at Yucca Mountain, Nevada*, U. S. Geological Survey, Denver, Colorado, 1996.

5.58 *Emplacement Drift Invert Structural Design Analysis*, DI#: BBDC00000-01717-0200-00001 REV00, CRWMS M&O.

6. Use of Computer Software

A. Scientific and Engineering Software:

Not Applicable.

B. Computational Support Software:

6.1 Microsoft Excel version 5.0, loaded on a 66MHz 486 PC. Used for calculations performed in Attachments II, III, IV, V, VII, and VIII. Inputs are also located in these attachments.

6.1 MathCad version 6.0+, loaded on a 66MHz 486 PC. Used for calculations performed in Attachment VI. Inputs are also located in this attachment.

7. Design Analysis

This design analysis is presented in three sections. Section 7.1 describes external events (natural phenomena and man-made events not initiated by MGDS operations) applicable to WP design. Section 7.2 discusses internal events (normal sequences of operations, mechanical or other failures, and operator error) applicable to WP design. Section 7.3 organizes the credible internal and external events identified in the previous two sections into groups of similar events, and identifies a bounding event for each group.

7.1 External Events Applicable To WP Design

The purpose of this section is to identify those external events and natural phenomena which must be considered in the design of the waste package. Section 7.1.1 performs an initial screening of the generic external events list from the PHA (Ref. 5.5) to identify those events applicable to WP design. Sections 7.1.2 through 7.1.5 provide the input parameters or information sources necessary for later design analyses to determine the effect of the event on WP performance. Alternatively, these sections may also provide information necessary for screening the events based on frequency of occurrence.

7.1.1 Initial Screening of External Events

Table 7.1-1 reiterates the entire generic external events list from the PHA (Ref. 5.5). In this section, events will be screened from this list according to the general criteria discussed in Section 3, items 2A and 2B. An external event may be immediately eliminated from further consideration under item 3.2A if the PHA previously screened it from further consideration in MGDS design. An "X" has been placed in the "PHA" column of Table 7.1-1 if an event may be screened in this manner.

An external event may be eliminated from consideration under item 3.2B if the event cannot directly affect the performance of the WP. This may be because the WP is contained within another system, which is designed to withstand the event, or the event results in the disruption of a service that is not required by the WP to continue to perform its functions. A system may be said to provide protection from the effects of an external event if it has been specifically assigned this function in the *MGDS Functional Analysis Document* (Ref. 5.9). This is assumption 4.3.1. An "X" has been placed in the "No Direct Effects" column of Table 7.1-1 if an event is screened in this manner, and a basis is provided in the remarks section.

External events in Table 7.1-1 which were not screened according to items 3.2A or 3.2B are bolded, and a pointer is provided to the specific section in 7.1 which provides a more detailed discussion of the event. Screening of external events according to item 3.2C typically requires a more detailed discussion to support the required frequency estimate, and therefore, will be included in one of these later sections if it is to be performed. In addition, the general type of analysis that will be required (structural, thermal, or criticality) to determine the effect of the event is identified.

Table 7.1-1. Initial Screening of External Events

External Event	Initial Screening		Remarks
	Removed by PHA	No Direct Effects	
Aircraft Crash		X	See Note A at end of this table
Avalanche	X		Event screened in PHA (Ref. 5.5)
Coastal Erosion	X		Event screened in PHA (Ref. 5.5)
Dam Failure	X		Event screened in PHA (Ref. 5.5)
Debris Avalanching		X	See Note A at end of this table
Denudation	X		Event screened in PHA (Ref. 5.5)
Dissolution		X	No direct effects but could influence rockfall. See Section 7.1.5.
Epeirogenic Displacement	X		Event screened in PHA (Ref. 5.5)
Erosion	X		Event screened in PHA (Ref. 5.5)
Extreme Wind		X	See Note A at end of this table
Extreme Weather Fluctuations			See Section 7.1.2
Fire (Range)		X	See Note A at end of this table
Flooding		X	See Note A at end of this table
Fungus, Bacteria, Algae	X		Event screened in PHA (Ref. 5.5)
Glacial Erosion	X		Event screened in PHA (Ref. 5.5)
Glaciation	X		Event screened in PHA (Ref. 5.5)
High Lake Level	X		Event screened in PHA (Ref. 5.5)
High Tide	X		Event screened in PHA (Ref. 5.5)
High River Stage	X		Event screened in PHA (Ref. 5.5)
Hurricane	X		Event screened in PHA (Ref. 5.5)
Inadvertent Future Intrusions (man-made)		X	See Note C at end of this table
Industrial Activity Induced Accident		X	See Note A at end of this table
Intentional Future Intrusion (man-made)		X	See Note C at end of this table
Landslides		X	See Note A at end of this table
Lightning		X	See Note A at end of this table
Loss of Off-site/On-site Power		X	See Note B at end of this table
Low Lake Level	X		Event screened in PHA (Ref. 5.5)
Low River Level	X		Event screened in PHA (Ref. 5.5)
Meteorite Impact	X		Event screened in PHA (Ref. 5.5)
Military Activity Induced Accident		X	See Note A at end of this table
Orogenic Diastrophism	X		Event screened in PHA (Ref. 5.5)
Pipeline Accident	X		Event screened in PHA (Ref. 5.5)
Rainstorm		X	See Note A at end of this table
Sandstorm		X	See Note A at end of this table

Table 7.1-1. Initial Screening of External Events

External Event	Initial Screening		Remarks
	Removed by PHA	No Direct Effects	
Sedimentation	X		Event screened in PHA (Ref. 5.5)
Seiche	X		Event screened in PHA (Ref. 5.5)
Seismic Activity, Uplifting (tectonic)	X		Event screened in PHA (Ref. 5.5)
Seismic Activity, Earthquake			See Section 7.1.3
Seismic Activity, Surface Fault Displacement		X	See Note A at end of this table
Seismic Activity, Subsurface Fault Displacement			See Section 7.1.4
Static Fracturing/Rockfall			See Section 7.1.5
Stream Erosion	X		Event screened in PHA (Ref. 5.5)
Subsidence	X		Event screened in PHA (Ref. 5.5)
Tornado		X	See Note A at end of this table
Tsunami	X		Event screened in PHA (Ref. 5.5)
Undetected Past Intrusions (man-made)	X		Event screened in PHA (Ref. 5.5)
Undetected Geologic Features	X		Event screened in PHA (Ref. 5.5)
Undetected Geologic Processes	X		Event screened in PHA (Ref. 5.5)
Volcanic Eruption	X		Event screened in PHA (Ref. 5.5)
Volcanism, Magmatic Activity	X		Event screened in PHA (Ref. 5.5)
Volcanism, Ash Flow	X		Event screened in PHA (Ref. 5.5)
Volcanism, Ash Fall		X	See Note A at end of this table
Waves (Aquatic)	X		Event screened in PHA (Ref. 5.5)

Note A: The FAD (Ref. 5.9, p. 3-95) indicates that the function of protecting personnel and property from natural and man-made safety hazards (function 1.4.3.1.4) has been assigned to the Repository Surface Areas and the Waste Handling Building Structure. Furthermore, these events are surface-based, and will not have an effect on systems in the Subsurface Repository Area. Therefore, it is assumed that these events will not be capable of directly affecting the performance of the WP because it is always contained within one of these systems (assumption 4.3.1).

Note B: The WP is a passive component which does not require a power source to maintain any of the functions discussed in Section 4.1.1. Any adverse effects of a loss of power on WP handling equipment will be identical to equipment/operator failures already discussed in Sections 4.1.3 and 7.2.

Note C: The FAD (Ref. 5.9, pp. 3-94) indicates that the function of protecting against armed incursion (function 1.4.3.1.3.1.4) and unauthorized access to the site (function 1.4.3.1.3.2) has been assigned to the Site Safeguards and Security System. Therefore, it is assumed that these events will not be capable of directly affecting the performance of the WP because it is always contained within one of these systems (assumption 4.3.1).

7.1.2 Extreme Weather Fluctuations

Discussion/Frequency:

The only aspect of weather fluctuations which may directly affect the WP is the outside ambient air temperature while it is in unventilated SSCs. As the WP is always inside of another MGDS facility or component, other aspects of the weather, such as precipitation or winds, cannot directly affect the WP. This event is considered credible without performing a frequency estimate.

Function Affected/Type of Analysis Required:

External temperatures will affect the rate at which heat is removed from the WP, and thus impact the temperature of the waste form and WP. In addition, a sufficient change in WP component temperatures may affect their material properties. Extreme weather fluctuations have the potential for affecting functions 1.4.5.1.1.2 and 1.4.5.1.2.1, and therefore will require consideration in thermal and structural analyses of the WP.

Magnitude/Severity of Event:

Over the 16 year period from 1962 to 1978, the ambient temperature for Yucca Flat (Ref. 5.43, sect. 1.3a) ranged from -14°F to 108°F (-25.6°C to 42.2°C).

7.1.3 Seismic Activity, Earthquake

Discussion/Frequency:

The MGDS preclosure seismic design methodology indicates that the Category 2 design basis earthquake has a mean return frequency of 1×10^{-4} per year, which is comparable to the frequency of the "Safe Shutdown Earthquake" for nuclear power plants (Ref. 5.24, p. 3-3). This frequency is to be used for VA design per Reference 5.21, Key 064.

Function Affected/Type of Analysis Required:

Earthquakes have the potential for affecting function 1.4.5.1.2.1, and thus will require consideration in structural analyses. If the above analyses determine that changes in the WP basket configuration occur as a result of earthquake loads, then performance of functions 1.4.5.1.1.1 and 1.4.5.1.1.2 may also be affected, thus requiring consideration in thermal and criticality analyses.

Magnitude/Severity of Event:

Section 4.1.2.2 indicates that the peak ground acceleration corresponding to a mean return frequency of 1×10^{-4} per year is 0.66g. In addition to maintaining the structural integrity of

the basket and barriers, the NRC standard review plan for dry cask storage (Ref. 5.19, p. 2-14) indicates that dry cask tip-over should not be a credible event for the Safe Shutdown Earthquake. Based on this precedence, the NRC may expect analyses to demonstrate that sufficient support is provided for a vertically oriented WP to prevent WP tipping for a Category 2 earthquake, regardless of whether such an event would lead to a WP breach.

7.1.4 Seismic Activity, Subsurface Fault Displacement

Discussion:

The DOE's Preclosure Seismic Design Methodology for a Geologic Repository at Yucca Mountain (Ref. 5.24, Section 4.4) has indicated that the primary seismic safety design criterion for fault displacement will be fault avoidance to the extent achievable by the facility layout and placement of systems important to safety. This reference indicates that a fault can be deemed to be avoided if the mean annual probability of displacement for which there is negligible engineering concern is less that $1x10^{-4}$ for Category 1 systems, and $1x10^{-5}$ for Category 2 systems.

The primary fault displacement engineering concern for an emplaced WP will be shear loading by the displaced drift walls. The planned waste emplacement mode of horizontal in-drift (Ref. 5.21, Key 066) means that a WP with a maximum outer diameter of ≈ 2 m (Ref. 5.21, DCWP 005 & 006) will be situated in a 5.5 m emplacement drift with a 200 mm thick concrete liner (Ref. 5.16 & assumption 4.3.2). With an average clearance between WP surface and drift wall of ≈1.6 m ((5.5m-2*0.2m-2m)/2), it is expected that any single displacement would result only in WP reorientation. If the largest WP was assumed to be placed directly across a fault with the same maximum displacement magnitude (130 cm) as the Solitario Canyon fault (see assumption 4.3.3 and Section 4.1.2.1), then two displacements would be required before the drift wall would contact the WP. The probability of two displacements (n=2) occurring in a year (t=1 year) can be estimated using the Poisson distribution,

$$Pr(n) = \frac{(\lambda t)^n \exp(-\lambda t)}{n!}$$

and assuming (assumption 4.3.3) that the frequency (λ) of a single displacement is equivalent to that of the upper bound given in Table 4.1.2-1 for a single displacement of the Solitario Canyon fault. This yields a probability of $4.2x10^{-10}$ that two displacements will occur along the same fault in a years time. This probability is expected to be conservative, as it neglects the additional low probabilities that such a fault could go undetected by site characterization activities, or that administrative controls preventing the emplacement of a WP across a known fault would be ignored. Therefore, shear loading of the WP by fault displacement is not considered to be a credible event. These conclusions will require verification once additional site-specific fault displacement data has been gathered.

Function Affected/Type of Analysis Required:

No functions affected. Further analysis not required.

Magnitude/Severity of Event:

Not Applicable.

7.1.5 Static Fracturing/Rockfall

Discussion/Frequency:

The PHA (Ref. 5.5, p. 32) defines static fracturing as any break in a rock due to mechanical failure by stress. The only aspect of this event which may impact the WP is the potential for rockfall. Reference 5.44 (p. 3-47) indicates that there is no relevant data available which would allow a frequency estimate for rockfalls impacting a WP. However, as the drift supports will likely be designed to the Category 2 design basis earthquake, and have sufficient design life to last through the preclosure phase (Ref. 5.44, p. 3-42), the preclosure frequency of rockfall onto a WP should be $< 1 \times 10^{-4}$ events/year. This assumes that there is no mechanism other than beyond design basis seismic activity which can result in drift support failure and rockfall (see assumption 4.3.23). Based on this information, rockfall onto a WP is considered a credible event.

Function Affected/Type of Analysis Required:

Rockfall onto a WP has the potential for affecting function 1.4.5.1.2.1, and thus will require consideration in structural analyses. The NRC standard review plan for dry cask storage systems also requires that a thermal evaluation (function 1.4.5.1.2.1) be performed if debris burial is a credible event (Ref. 5.19, p. 2-14). If the above analyses determine that changes in the WP basket configuration occur as a result of rockfall loads, then performance of function 1.4.5.1.1.1 may also be affected, thus requiring consideration in thermal and criticality analyses.

Magnitude/Severity of Event:

Reference 5.44 (p. 3-45) discusses the results of several preliminary analyses performed using the UNWEDGE computer code to estimate the size of potential rock blocks. For emplacement drifts, the block sizes ranged from 0.1 to 9.7 metric tons. The *WP Off-Normal and Accident Scenario Report* (Ref. 5.14, Attachment III) also performed a preliminary estimate of the distribution of block sizes using joint frequency estimates based on measured borehole rock quality designation data. The results indicated that 99% of the blocks would be less than 10 metric tons and that 100% of the blocks would be less that 25 metric tons. Based on this preliminary information, the WP should be designed to withstand at least a 25 metric ton rock so that breach by rockfall is not a credible event for

preclosure. Future studies using probabilistic keyblock analysis methods and TSw2 joint properties obtained from ESF mapping are planned to develop a more refined distribution of keyblock size. Furthermore, as most rockfalls would be expected to occur in the postclosure phase, once the ground support has failed, any decision on the design rock mass for the WP should also consider postclosure WP performance requirements. For a 5.5 m drift, drop heights may range from ≈2.5 to ≈3.1 m depending on the type of WP (based on information in Attachment I per assumption 4.3.2).

7.2 Internal Events Applicable To WP Design

The purpose of this section is to identify those internal events which must be considered in the design of the waste package. Section 7.2.1 discusses internal design basis events which are associated with normal operation of the MGDS, and thus must be considered in the design of the WP. Section 7.2.2 discusses internal design basis events which might result from MGDS equipment failures or operator error.

7.2.1 Internal Events Associated with Normal Operations

These events are associated with the routine operations of handling, transporting, and emplacing the WP, and thus are automatically considered credible.

7.2.1.1 Dead Loads

Dead load is simply the load on a component produced by its own weight.

Discussion:

Various components of the WP will be required to support its weight in the following routine handling and emplacement operations:

a) Loaded WP in a horizontal position in an emplacement drift on WP supports.
b) Loaded WP in a vertical position supported only by its bottom skirt.
c) Loaded WP in a horizontal position supported only by gantry lifting heads contacting the inside surface of each skirt.
d) Loaded WP in a vertical position supported only by a yoke mechanism which engages the holes in the top skirt of the WP.
e) Loaded WP in a horizontal position in an emplacement drift on WP supports and entirely covered with backfill (if used).

Function Affected/Type of Analysis Required:

Dead loads affect function 1.4.5.1.2.1, and thus will require consideration in structural analyses.

Magnitude/Severity of Event:

No further description necessary.

7.2.1.2 Live Loads

Live loads are those loads associated with the actions of handling, transportation, or emplacement equipment.

Discussion:

As part of normal repository operations, the WP will be subject to the following live loads:

a) Loading of waste form into open disposal container.
b) Disposal container cell crane lifting fixture engages notches in WP upper skirt prior to lifting.
c) Decontamination using pelletized CO_2.
d) Shifting/settling of contained waste form during horizontalization and transport.
e) Gantry lifting heads engaging WP skirts prior to lifting.
f) Application of backfill (if used)

Function Affected/Type of Analysis Required:

Live loads affect function 1.4.5.1.2.1, and thus will require consideration in structural analyses.

Magnitude/Severity of Event:

No further description necessary

7.2.1.3 Internal Pressure Loads

Discussion/Frequency:

Reference 5.21, DCWP 004 indicates that the WP will be filled with helium. It is assumed for this analysis that such filling will be at atmospheric pressure and at a temperature of 25°C (assumption 4.3.11).

Function Affected/Type of Analysis Required:

The internal pressure of the WP may affect function 1.4.5.1.2.1, and thus will require consideration in structural design analyses.

Magnitude/Severity of Event:

The peak normal pressure (100% intact fuel rods) will occur at the time of peak internal fill gas temperature. Conservatively using the maximum allowable waste form temperatures (Ref. 5.21, DCWP 001 & 002) as the mean internal gas temperatures, the maximum internal pressure will be ≈30 psia (0.21 MPa) for the SNF WPs, and 33 psia (0.23 MPa) for Defense High-Level Waste (DHLW) WPs. This calculation is provided in detail in Attachment V, along with an estimate of maximum internal pressure for off-normal conditions.

7.2.1.4 Thermal Loads

Discussion:

From a thermal perspective, the WP will be subject to the following three distinct environments during the preclosure phase: 1), loaded and waiting in the WHB DC cell lag storage area, 2), in the transporter on its way to the emplacement drift, and 3), emplaced in the emplacement drift. Normal thermal conditions for an emplaced WP loaded with thermal design basis fuel will be based on the repository thermal loading as well as drift and WP spacing. For any given environment, the WP must demonstrate that:

a) Peak waste form temperatures remain below limits, and
b) Thermal stresses in WP barriers and basket remain below allowables.

Function Affected/Type of Analysis Required:

Peak cladding temperatures affect function 1.4.5.1.1.2, and thus will require consideration in thermal analyses. WP basket and barrier temperatures affect function 1.4.5.1.2.1, and thus will require consideration in structural analyses.

Magnitude/Severity of Event:

Peak cladding, and other component temperatures are determined during the above mentioned design analyses, and are dependent on a variety of parameters (such as WP design, repository thermal loading, design basis fuel, etc.) which cannot be briefly summarized here.

7.2.2 Internal Events Associated with Equipment Failure/Operator Error

The purpose of this section is to discuss each of the internal events associated with equipment failure or operator error that were identified in Table 4.1.1-2. For each event, a determination of credibility will be performed, typically by estimating the frequency of the event. If the event is considered credible the WP function(s) potentially affected and the severity/magnitude of the event are evaluated based on available information.

7.2.2.1 Falling Objects

This section discusses events which involve objects being dropped or otherwise falling onto the WP. The following four falling object events were identified in Section 4.1.1.3:

Int. Event 1. WF drop onto WP during loading,
Int. Event 9. Handling equipment drop onto WP,
Int. Event 17. Section of emplacement drift concrete liner falls onto WP, and
Int. Event 22. Emplacement gantry drops one WP onto another.

7.2.2.1.1 WF drop onto WP during loading

Discussion/Frequency:

An estimate of the credibility of this event can be obtained by examining industry experience with WF handling, namely commercial SNF. The information discussed in Section 4.1.3.1 and Attachment II indicates that 26 fuel assemblies were dropped during normal fuel handling activities at commercial reactors during the period from 1970 to 1991. To estimate a drop frequency, the total number of fuel handlings at commercial facilities must be estimated. Section 4.1.3.1 indicates that by the end of 1991, there were 37,432 assemblies in commercial reactor cores, and 82,382 assemblies which had been discharged, for a total of 119,814 assemblies. Section 4.1.3.1 also indicates that every assembly experienced a minimum of 5 handlings prior to being irradiated. The minimum number of additional handlings prior to discharge depends on the utility's refueling practice; 10 handlings if the full core is off-loaded at each refueling, and 4 if the utility only off-loads the assemblies being discharged and shuffles the remainder. The information presented in Section 4.1.3.1 indicates that 29 of the 110 plants (≈26%) operating in 1996 practiced shuffling, while the remainder performed full core off-loads. In-core assemblies are assumed to have undergone only half the number of handlings that discharged assemblies received. Calculations performed in Attachment II indicate that the minimum number of unirradiated, irradiated, and total handlings was 599,070, 851,061, and 1,450,131, respectively. These estimates are expected to be conservative, as it neglects additional handlings which might occur as a result of spent fuel pool reracking or moving assemblies to another storage site.

The frequency of fuel drops is then estimated to be 1.8×10^{-5} drops/handling by simply dividing the total number of drops by the number of handlings (26/1,450,131). Key Assumption 002 (Ref. 5.21, Table 3-8) indicates that there will be 121,152 uncanistered fuel assemblies (7,115 truck + 114,037 rail), out of a total of 220,416 assemblies (assumption 4.3.20). Based on the above frequency and the number of uncanistered fuel assemblies indicated in Key Assumption 002, the expected number of drops during WP loading will be 2.2 ($121,152 \times 1.8 \times 10^{-5}$). If all 220,416 assemblies were uncanistered, there would be 3.9 drops. Therefore, this event is considered credible.

Function Affected/Type of Analysis Required:

Dropping a WF onto a WP has the potential for affecting function 1.4.5.1.2.1, and thus will require consideration in structural analyses. However, it should be noted that since the WP has not yet been sealed at this point, the radionuclide containment aspect of this function is not yet in effect, and cannot therefore be challenged. The primary concern (for the WP) would be in terms of the economics/logistics of replacing or repairing a damaged WP basket.

Magnitude/Severity of Event:

Reference 5.26 indicates that a fuel assembly would have a maximum drop height of between 15 to 25 feet depending on the length of the assembly being lifted. The mass of the largest PWR and BWR assemblies is 887 kg and 332 kg, respectively (Ref. 5.21, EBDRD 3.2.3.4.C.1.g).

7.2.2.1.2 Handling equipment drop onto WP

Discussion/Frequency:

The yoke used for lifting the WPs is the largest item in the DC cell that could fall on the WP. Such a fall could occur as a result of failure of the crane cable, hoisting drums, brakes or control system. Based on generic failure rates for these components, Reference 5.56 (p. 4-32) estimated that such a failure could occur with a frequency of 5.0×10^{-5} per hour. However, Reference 5.56 simply took the union of the above component failure rates to arrive at the above frequency, and did not consider component redundancy. Since a typical heavy-lift bridge crane at a nuclear power plant has at least two of every active component necessary to support the load (Ref. 5.55), the above frequency will be raised to the power of two, yielding 2.5×10^{-9} per hour. Since a typical no-load hook speed (vertical motion) for such a crane is 16 feet/minute (Ref. 5.55, p. 2-13), it is estimated that the yoke will spend ≈1 minute over the WP for each lift. At 456 WPs per year (assumption 4.3.19), and 3.5 vertical lifts per WP (2-3 lifts for weld station + 1 lift into Horizontalizer), this yields a frequency of 6.7×10^{-8} drops/year (456 WPs/yr * 3.5 lifts/WP * 2.5×10^{-9} drops/hr * 1 min./lift ÷ 60 min/hr). However, the above calculation does not explicitly consider common cause failure or human error. At least one common cause failure, drop due to a

beyond design basis seismic event, would not be credible since the yoke may only be over a WP 0.3% of a year (0.003 x $<10^{-4}$ events/year = $<3x10^{-7}$ events/year). Ref. 5.55 (p. 2-9) suggests that the control system of a redundant crane typically prevents the operator from rapidly lowering the yoke, regardless of how fast the controls are manipulated. However, it is possible that during the yearly maintenance (Ref. 5.7, p. 58), a worker might make an error which would disable this system, leaving it unavailable to protect against an operator error. Using the selection HEP in assumption 4.3.15b for a crane operations error ($1x10^{-3}$), an HEP of $1.5x10^{-3}$ for unrecovered controller maintenance, approximately 1600 lifts per year (3.5*456), one maintenance shutdown per year, and redundant controllers, this would still be considered a credible scenario at $3.6x10^{-6}$ events/year (1600 lifts * 10^{-3} errors per lift * 1 maintenance/year * $(1.5x10^{-3})^2$ errors per maintenance (independently and randomly occurring on each controller). Therefore, a handling equipment drop onto a WP is considered credible.

Note the unrecovered controller maintenance HEP is estimated as the product of:
(0.3) -- HEP in use of written maintenance procedures
(0.05) -- HEP in use of written test or calibration procedure (maintenance recovery)
These values are taken from Table 20-6 of Reference 5.52.

Function Affected/Type of Analysis Required:

Handling equipment dropping onto the WP has the potential for affecting function 1.4.5.1.2.1, and thus will require consideration in structural analyses.

Magnitude/Severity of Event:

A redundant lifting yoke for a transportation cask, with a mass comparable to that of a WP, has a mass of ≈ 2300 kg (Ref. 5.54, dwg. MPC-3310). Based on the information in Reference 5.26 on the DC cell crane high hook height, the distance between the yoke and the top of the shortest WP will not be greater than 2 m.

7.2.2.1.3 Section of emplacement drift concrete liner falls onto WP

Discussion/Frequency:

As with rockfall (see Section 7.1.5), this event may result from beyond design basis seismic activity. It therefore has a frequency < $1x10^{-4}$ events/year and is considered a credible event.

Function Affected/Type of Analysis Required:

A section of concrete dropping onto the WP has the potential for affecting function 1.4.5.1.2.1, and thus will require consideration in structural analyses.

Magnitude/Severity of Event:
At a density of approximately 2400 kg/m^3 (Ref. 5.45, back cover) a 5.85 m x 1.98 m x 200 mm slab of concrete (length and width based on WP size from Reference 5.21, DCWP 004, thickness based on sketch in Attachment I) would have a weight of ≈ 5.5 metric tons.

7.2.2.1.4 Emplacement drift gantry drops a WP onto another WP

Discussion/Frequency:

While the gantry has the capability to lift a WP over a WP, it is expected that this will only occur if an individual WP requires removal, because an entire drift could otherwise be removed in sequence without lifting one WP over another. Key assumption 061 (Ref. 5.21) indicates that retrieval will only be performed for failed WPs. Assuming that the frequency of WP drop by the gantry is 1.8×10^{-5} per lift (see Section 7.2.2.1 and assumption 4.3.12), at least 9 such retrievals would be required in a 150 year period before such a drop event would be considered credible (9 lifts ÷ 150 yrs * 1.8×10^{-5} drops/lift). Since it is not expected that there will be 9 such WP failures in the preclosure phase, this event will not currently be considered credible. This conclusion may require re-evaluation if it is determined that another subsurface DBE results in WP breach and a design change is not instituted to prevent this, or WP retrieval for performance confirmation is required.

Function Affected/Type of Analysis Required:

Not Applicable. No Function Affected.

Magnitude/Severity of Event:

While this event is not currently considered credible for the above mentioned reasons, the worst case drop of a WP onto a WP in the emplacement drift will be the 50 metric ton 21 PWR WP (Attachment I) falling ≈0.6 m onto the 12 PWR WP (from Attachment I & assumptions 4.3.2 and 4.3.22: 2.0m - 1.555m + 16cm ≈0.6 m).

7.2.2.2 WP Drop Events

This section discusses events which involve dropping the WP. The following five such internal events were identified in Section 4.1.1.3:

- Int. Event 4. WP vertical drop from DC cell crane,
- Int. Event 6. WP horizontal drop from WHB gantry,
- Int. Event 7. WP vertical/horizontal drop onto sharp object,
- Int. Event 16. WP rail car rolls out of transporter, and
- Int. Event 22. Emplacement drift gantry drops WP onto WP supports, shadow shield, or other WP.

7.2.2.2.1 WP vertical drop from DC cell crane

Discussion/Frequency:

The only opportunities for vertical drops of the WP is in the WHB, when the WP is lifted by the Disposal Container Cell crane. Information provided by Repository Surface design (Ref. 5.25) indicates that there will be two or three vertical lifts of the WP to move it to and from the welding station, depending on whether a move to the staging area is required. At an average of 456 WPs per year, and assuming that the frequency of WP drop by the crane is 1.8×10^{-5} per lift (see Section 7.2.2.1 and assumption 4.3.12), the same as that for SNF assembly drops, the frequency of WP drops for this height is estimated to be 2.1×10^{-2} per year (1.8×10^{-5} drops/lift * 2.5 lifts/WP * 456 WP/year). Another vertical lift of the WP occurs when the WP is moved from the staging area to the Horizontalizer (Ref. 5.25). Using the above information, the frequency of drop for this activity is estimated to be 8.2×10^{-3} per year (1.8×10^{-5} drops/lift * 1 lift/WP * 456 WP/year). The total frequency of vertical drops is estimated to be 2.9×10^{-2} events/year ($2.1 \times 10^{-2} + 8.2 \times 10^{-3}$), making this a credible event.

Function Affected/Type of Analysis Required:

A WP vertical drop has the potential for affecting function 1.4.5.1.2.1, and thus will require consideration in structural analyses.

Magnitude/Severity of Event:

Reference 5.25 indicates that moves to and from the welding station require lifts of 0.152 m, while moves to the Horizontalizer require lifts of 0.456 m. Reference 5.26 indicates that the maximum crane hook height is such that the bottom of the shortest WP cannot be lifted higher than 1.98 m (6.5 ft) above the floor.

7.2.2.2.2 WP horizontal drop from WHB gantry

Discussion/Frequency:

There are two opportunities for a horizontal drop of the WP in the WHB. The first occurs when the WHB gantry moves the WP from the Horizontalizer to the pedestals in the decontamination cell. The second occurs following decontamination, when the gantry lifts the WP off of the pedestals and moves it to the transporter's reusable rail car. Assuming that the gantry drops WPs with a frequency of 1.8×10^{-5} drops/lift (based on the fuel assembly drop frequency, see Section 7.2.2.1 and assumption 4.3.12), and an average of 456 WPs are handled per year, the estimated frequency for horizontal drops of the WP in the WHB is 1.6×10^{-2} drops/year (1.8×10^{-5} drops/lift * 2 lifts/WP * 456 WPs/yr). Therefore, this event is currently considered credible.

Function Affected/Type of Analysis Required:

A WP horizontal drop has the potential for affecting function 1.4.5.1.2.1, and thus will require consideration in structural analyses.

Magnitude/Severity of Event:

Reference 5.25 indicates that the WP will be lifted a maximum 1.68 m to clear the horizontalizer, and maximum of 0.368 m for transfer from the pedestals to the rail car.

7.2.2.2.3 WP rail car rolls out of transporter

Discussion/Frequency:

Two types of failures could cause the WP rail car to roll out of the transporter: spurious operation of the rail car off-loading mechanism, or a human error causing activation of the system prior to the transporter's arrival at the emplacement drift opening. Spurious actuation failure rates of switches and relays are typically in the range of 1×10^{-6} per hour (Ref. 5.47). Given that a typical transporter trip from the WHB to the emplacement drift is on the order of 30 minutes (Ref. 5.7, p. 47), and an average 456 trips will be made each year, the frequency of spurious actuation is estimated to be 2.3×10^{-4} events/year (1×10^{-6} per hour * 0.5 hrs/trip * 456 trips/yr). Human error rates may lead to a higher frequency of accidental off-loading. Therefore, this event will currently be considered credible until more detailed analysis of the off-loading system shows otherwise.

Function Affected/Type of Analysis Required:

A WP rolling out of the transporter has the potential for affecting function 1.4.5.1.2.1, and thus will require consideration in structural analyses.

Magnitude/Severity of Event:

Based on information in the *MGDS ACD Report* (Ref. 5.7, Vol. II, Fig. 8.6.4-1) the height of the rail car in the transporter is ≈ 1.28 m above the invert.

7.2.2.2.4 Emplacement drift gantry drops WP

Discussion/Frequency:

At the emplacement drift opening, another gantry is used to lift the WP off of the transporter's reusable rail car, and carry it over the radiation shield to the next available set of WP supports. Assuming that the gantry drops WPs with a frequency of 1.8×10^{-5} drops/lift (see Section 7.2.2.1 and assumption 4.3.12), and an average of 456 WPs are handled per year, the estimated frequency for horizontal drops of the WP in the drift is

8.2×10^{-3} drops/year (1.8×10^{-5} drops/lift * 1 lift/WP * 456 WPs/yr). A beyond design basis seismic event (< 1×10^{-4} per year) may also cause the gantry to drop the WP. Therefore, this event is considered credible.

Function Affected/Type of Analysis Required:

A WP horizontal drop has the potential for affecting function 1.4.5.1.2.1, and thus will require consideration in structural analyses.

Magnitude/Severity of Event:

The emplacement drift gantry will have to lift the WP high enough to allow its bottom to clear the radiation shadow shield near the entrance of the emplacement drift (Ref. 5.17). While detailed information on the dimensions of this shield have not yet been developed, its height can be inferred from the WP support sketches (see Ref. 5.16, Attachment I, and assumption 4.3.2). In order for the shadow shield to be effective, it will have to be slightly taller than the top of the largest emplaced WP. An additional height of 8 cm will be assumed for this analysis (assumption 4.3.22), making the top of the shadow shield an estimated 3.04 m above the bottom of the drift (from Att. I; 1.96 m from drift bottom to WP center line + 1 m largest possible WP radius + 8 cm), 2.35 m above the top of the pier (from Att. I; 3.04 m - 313 mm invert thickness - 375 mm pier height), and 1.85 m above the top of the steel support. If one end of the WP falls first, that end may fall as far as 2.73 m to the bottom of pre-cast concrete invert between the piers (actual distance may be shorter if this space is filled with some material such as crushed tuff). Assuming that an additional clearance of 8 cm (assumption 4.3.22) will be provided between the bottom of the WP and the top of the shield, this makes the potential drop heights 16 cm onto the shield, 2.43 m onto the pier, or 1.93 m to 2 m onto the supports, depending on where the WP hits.

7.2.2.2.5 WP vertical/horizontal drop onto sharp object (puncture hazards)

Discussion/Frequency:

In the licensing of transportation casks for SNF, 10CFR71.73(c)(2) requires that the cask design be capable of withstanding a 40 inch (1 m) drop onto a six inch diameter mild steel punch. The punch is required to be mounted on an essentially unyielding horizontal surface. Its top must be horizontal, with edges rounded to a radius not to exceed 0.25 inches. The length of the punch must be sufficient to cause maximum damage to the package, but it should not be less than 8 inches. During the drop, the cask is required to be oriented in a position where maximum damage is expected. To satisfy these requirements, analytical evaluations are typically performed to show that the cask has sufficient thickness to prevent punching by shear failure. Based on this precedence, and the fact that several of the above mentioned WP drops are credible and will not necessarily

occur over a flat surface, this event is considered credible without performing a frequency estimate.

Function Affected/Type of Analysis Required:

A WP drop onto a sharp object has the potential for affecting function 1.4.5.1.2.1, and thus will require consideration in structural analyses.

Magnitude/Severity of Event:

Based on a review of the available repository design information (Refs. 5.6 & 5.7), the only opportunities for the WP to fall onto a punch-like object occur while it is being transported in a horizontal position. These include:

- Potential drop of 1.93 m onto WP steel supports in the emplacement drift
- Potential drop of 2.43 m onto emplacement drift pier

In particular, the WP steel support provides a geometry similar to the 10CFR71 punch.

7.2.2.3 WP Tip-Over and Slap Down

This section discusses events which involve a WP which is initially in a vertical position tipping over and slapping down onto a flat surface. Only one such internal event (No. 5) was identified in Section 4.1.1.3.

Discussion/Frequency:

WP slap down could result from the logical continuation of a vertical drop, or a beyond design basis seismic event (< 1×10^{-4} events/year). Reference 5.14 (p. 30) indicates that WP tip-over following a vertical drop is only possible for the 0.456 m drop of a 12 PWR/24 BWR WP. Based on Key Assumption 003 (see assumption 4.3.19), WPs of this size represent 6.24% of the total number of WPs (683/10,938). Therefore, the frequency of WP slap down will be 5.1×10^{-4} (0.0624 * 8.2×10^{-3} drops of 0.456 m per year from Section 7.2.2.2.1) making this a credible event for at least one type of WP. Furthermore, the NRC standard review plan for dry cask storage (Ref. 5.19, p. 2-13) indicates that dry cask tip-over should be evaluated regardless of credibility. Therefore, based on this precedence, WP slap down is considered a credible event for all WP sizes.

Function Affected/Type of Analysis Required:

A WP slap-down has the potential for affecting function 1.4.5.1.2.1, and thus will require consideration in structural analyses.

Magnitude/Severity of Event:

No further description required.

7.2.2.4 Collisions and Transporter Accidents

This section discusses events which involve the WP colliding with another object during transportation. The following five such internal events were identified in Section 4.1.1.3:

- Int. Event 8. WP collides/bumps other WP while being placed in DC cell lag storage area,
- Int. Event 14. Transporter derailment,
- Int. Event 15. Transporter runaway,
- Int. Event 19. Transporter door closes onto WP, and
- Int. Event 24. Emplacement gantry lifts WP to insufficient height, causing collision with shadow shield or other WP.

7.2.2.4.1 WP collides/bumps other WP while being placed in DC cell lag storage area

Discussion/Frequency:

In the absence of specific information on how the WPs will be moved with the DC cell crane (full manual control of hook location vs. travel to and from preset coordinates only) it is difficult to estimate a specific frequency of occurrence for this error. However, given that human error probabilities are typically in the range of 10^{-2} to 10^{-3} errors per task, and that there will be ≈1600 lifts/year, this is most likely a credible event.

Function Affected/Type of Analysis Required:

Bumping one WP into another has the potential for affecting function 1.4.5.1.2.1, and thus will require consideration in structural analyses.

Magnitude/Severity of Event:

The design speed for a typical bridge crane rated at 85 tons (Ref. 5.55, p. 2-12) is 50 feet per minute (≈0.9 km/hr).

7.2.2.4.2 Transporter derailment

Discussion/Frequency:

During transport from the WHB to the emplacement drift, the WP and reusable railcar are contained in a shielded transporter. The transporter is pulled by a 32 MT electric-powered locomotive (with battery backup) at a maximum speed of 8 km/hr (Ref. 5.6, Vol.

II, p. E-4). For this analysis, the average transporter trip is assumed to be 5 km (see assumption 4.3.9). Low speed derailments of a WP transporter could be expected to occur due to a number of reasons, such as poor rail conditions, wheel bearing or axle failures, or switching errors. To estimate the frequency of occurrence of transporter derailments, the 1993-1995 accident/incident bulletins published by the Federal Railroad Administration (Refs. 5.38, 5.39, 5.40) (FRA) were reviewed. These reports summarize the derailment rates for each year from 1975 to 1995 (in Ref. 5.40). Estimates developed from this information are expected to be conservative as they do not take credit for repository design features which may reduce or eliminate several of the causes of derailments in commercial rail applications. The average derailment rate over this 21 year period was found to be 3.5×10^{-6} derailments per km of track. The average derailment rate over last 10 years, which was the rate used for this analysis, was found to be 2.0×10^{-6} derailments per km. The calculational development of these rates from the FRA data are provided in Attachment IV.

This frequency was further reduced to 1.4×10^{-6} derailment per km by eliminating derailments that occurred above 10 mph (27.74%). Assuming an average of 456 WPs are emplaced each year based on Key Assumption 003 (Ref. 5.21, see assumption 4.3.19) and an average trip of 5 km, this results in an estimated 3.3×10^{-3} derailments per year.

Table 19 of FRA Bulletins 162, 163 and 164 (Refs. 5.38, 5.39, 5.40) summarizes train accidents by cause and type. Three causes were identified as related to switching (specifically: frogs, switches and track appliances; general switching rules; and use of switches). The percent of derailment accidents with a switch-related cause, e.g., problems with switching equipment, and human error in the use of switches or following of switching rules, from the 1993-1995 FRA data is 25.05% (see Attachment IV). Comparison with the other identified causes in Table 19 show that switching-related causes are the dominant reason for derailments, with track geometry defects and rail joint problems the next leading causes (of derailments). Therefore, the above estimated frequency may not be sufficiently conservative because the number of switches encountered per km traveled may be much greater for the MGDS than for a commercial rail line. Since switch yards typically contain a large number of switches per length of track, data derived from this source (i.e., switch yards) may be more applicable to the MGDS (assumption 4.3.10). Based on the information in the 1993-1995 FRA incident reports, it was determined that the rate of derailment per km of yard track is 3.53 times that of the overall derailment rate for 1993-1995. Furthermore, 94.73% of yard derailments occurred in the 1-10 mph range for 1993-1995. Based on this information and the above assumptions, a more conservative estimate of the frequency of transporter derailments estimated to be 2.0×10^{-6} derailments/km * 3.53 * 0.9473 * 456 WP/year * 5 km/WP = 1.5×10^{-2} derailments per year. Therefore, this event is considered credible.

Function Affected/Type of Analysis Required:

A transporter derailment has the potential for affecting function 1.4.5.1.2.1, and thus will require consideration in structural analyses.

Magnitude/Severity of Event:

If a transporter derails, it may or may not result in a rollover. The data obtained from the FRA did not allow a determination of the fraction of derailments which resulted in a rollover, so the effects of both will be discussed. A transporter derailment without a rollover, will result in the transporter quickly coming to a stop from 8 km/hr. If the derailment occurs at a switch, such as at the fork leading to the North Ramp Extension, the possibility for impact with the drift wall exists. In either case, there are three possible effects on the WP as a result of a transporter derailment without a rollover:

1. No movement if the reusable rail car structure and brakes or blocking holds;
2. The WP, with or without the reusable rail car depending on which of the above items fails, continues forward at a maximum velocity of 8 km/hr to strike the front or back of the transporter (for comparison purposes, Att. VIII indicates that a WP reaches this velocity for a 0.25 m drop); and
3. The WP, with or without the reusable rail car depending on which of the items in 1 fails, continues forward at a maximum velocity of 8 km/hr through failed transporter doors, and is ejected at a height of ≈ 1.28 m (Ref. 5.6, Vol. II, Fig. 8.6.4-1). This is only possible when the transporter is being backed-up to an emplacement drift, as the doors do not face the direction of travel on the way down the North Ramp.

If a transporter derailment *with* a rollover occurred, the transporter, along with the enclosed WP and emplacement cart, would essentially pivot about one of the rails and slap down. During such a rollover, the centerline of the WP would describe an arc with a radius of ≈2.5 m above the pivot point. However, at some point during the transporter rollover, the WP and cart might tip such that the side of the WP will be in direct contact with the wall of the transporter when it strikes the ground.

7.2.2.4.3 Transporter runaway

Discussion/Frequency:

A transporter runaway is defined as the failure of human and/or mechanical controls to maintain the transporter at or below the maximum speed limit. The *WP Off-Normal and Accident Scenario Report* (Ref. 5.14, p. 33) performed a simple scoping fault tree analysis of transporter runaway and found that the frequency varied from 5.5×10^{-8} events per trip to 1.4×10^{-11} events per trip. Using the average of 456 trips/year, this translates to an annual frequency of 2.5×10^{-5} to 6.4×10^{-9} events/year. The main reason for the variability in the

estimated frequency was the number and type of assumptions (i.e., the degree of automation) which were required due to the lack of detailed design information on the transporter system. As this condition still persists, further fault tree analysis will not be performed for this design analysis.

The *Federal Railroad Administration Accident/Incident Bulletins* (Refs. 5.38, 5.49, & 5.40) also provide data which, on a more generic basis, can be used to estimate the frequency of accidents resulting from a loss of speed control. Estimates developed from this information are expected to be conservative as they do not take credit for repository design features which may reduce or eliminate several of the causes of loss of speed control in commercial rail applications. Excel calculations detailed in Attachment VIII based on this data indicate that the overall rail accident rate during the period from 1991 to 1995 was 2.7×10^{-6} accidents per rail km traveled. Of the rail accidents which occurred during the period from 1993 to 1995, an average of 4.17% of these accidents were derailments or collisions related to human or mechanical failures to control the speed of the train. This estimate included collisions/derailments involving failure of the operator to comply with speed limits, failure of the operator to apply the brakes when needed, and mechanical/electrical failure of the brakes. Furthermore, an average of 21.2% of the accidents from 1993 through 1995 were derailments/collisions which occurred at speeds greater than 10 miles/hour (≈ 16 km/hr). This value is estimated to account for the fact that not all derailments/collisions resulting from loss of speed control necessarily occurred at high speeds. Multiplying the above three numbers together yields an estimated rate of derailments/collisions > 10 miles/hour, that are related to loss of speed control, of 2.4×10^{-8} per km. Applying this commercial rail frequency to the transporter, and using the averages of 456 transporter trips/year (assumption 4.3.19) and 5 km per trip (assumption 4.3.9), yields a frequency of 5.4×10^{-5} events/year. Since the WP transporter design will incorporate safeguards not found on commercial rail, operate in a relatively unchanging environment, and possibly be more procedure driven than a typical rail system, it is likely that the actual frequency of loss of speed control may be one or two orders of magnitude lower than the above estimate.

Both of the above preliminary estimates indicate that a transporter runaway is a borderline incredible event. A significant amount of design resources should not be expended on evaluating WP response to this event until more detail on the transporter design is available, and a more design specific frequency estimate can be performed. However, a scoping severity calculation is provided below.

Function Affected/Type of Analysis Required:

A transporter runaway has the potential for affecting function 1.4.5.1.2.1, and thus, if considered credible, will require consideration in structural analyses.

Magnitude/Severity of Event:

A conservative estimate of the maximum transporter velocity as a function of distance coasted down the North Ramp is provided in Attachment VIII. The estimate includes the 20 lb/ton rolling resistance indicated in the *MGDS ACD Report* (Ref. 5.6, Vol II, p. E-19), but does not consider air resistance or other friction forces. This estimate indicates that a transporter with an initial velocity of 8 km/hr will reach a velocity of ≈22 km/hour (≈14 mph) after coasting ≈250 m down the North Ramp (2.15% grade), and ≈63 km/hr (≈40 mph) after coasting 2250 m, which is approximately the length of the entire North Ramp. The latter would be expected to be the maximum possible velocity because, if the transporter did not derail at or before the curve at the bottom of the North Ramp, it would probably begin to slow again due to wheel friction associated with rounding the curve and the positive grade following the curve. In addition, some of the energy of any impact would most likely be absorbed by the robust transporter and/or locomotive.

7.2.2.4.4 Transporter door closes onto WP

Discussion/Frequency:

This event is considered credible without performing a frequency estimate. Information in the *MGDS ACD Report* (Ref. 5.6, Vol. II, Fig. 8.6.4-1) indicates that the transporter will have side-swing type double doors. This event would be expected to damage the motor or gearing mechanism associated with the doors, rather than the WP.

Function Affected/Type of Analysis Required:

No Functions Affected. Not Applicable.

Magnitude/Severity of Event:

Not Applicable.

7.2.2.4.5 Emplacement gantry lifts WP to insufficient height, causing collision with shadow shield or other WP

Discussion/Frequency:

There is insufficient information on the design and operation of the gantry to perform a specific frequency estimate. However, given that human error probabilities are typically in the range of 10^{-2} to 10^{-3} errors per task, and that there will be an average of 456 lifts/year (assumption 4.3.19), this is most likely a credible event.

Function Affected/Type of Analysis Required:

Bumping the end of the WP into the shadow shield has the potential for affecting function 1.4.5.1.2.1, and thus, will require consideration in structural analyses.

Magnitude/Severity of Event:

The *Emplacement Equipment/Concept Development Report* (Ref. 5.12, Data Sheet 7) indicates that the gantry concept would have a maximum speed of 3 km/hr. The end of the WP skirt would be the point of impact.

7.2.2.5 Missiles and Explosive Overpressure

This section discusses events which produce external projectiles and/or pressure waves. The following two such internal events were identified in Section 4.1.1.3:

Int. Event 10. Pressurized system missile, and
Int. Event 21. Fire/Hydrogen explosion from transporter locomotive batteries.

7.2.2.5.1 Pressurized system missile

Discussion/Frequency:

There are four general types of internal missiles which can occur in industrial facilities. These are,

1. Missiles generated by the conversion of stored strain energy to kinetic energy (bolts, studs, etc.);
2. Piston-type missiles such as valve stems or check valve pivot studs in high pressure fluid systems;
3. Jet propelled missiles (most significant in terms of available kinetic energy) such as components which contain high pressure fluids; and
4. Missiles from rotating machinery.

Typical examples of the types of internal missiles which are evaluated for nuclear power plants include catastrophic failures of PWR control rod drive mechanisms (for which a special missile shield is provided during reactor operation) and valve stems and bonnets.

The only internal missiles identified by the PHA (Ref. 5.5) were associated with pneumatically driven machinery and CO_2 decontamination units. Attachment IX contains vendor information on a typical CO_2 decontamination unit available from Alpheus Cleaning Technologies Corp. This information indicates the maximum air pressure required by the unit is 300 psig (≈2.1 MPa). An internal missile could take the form of a valve stem or other part ejected from one of these decontamination units. Ejection of a

valve stem could result from an internal rupture and separation of the valve disc from the stem. The frequency for internal rupture of valves ranges from 5×10^{-8} to 1×10^{-7} events per hour (Ref. 5.47). Considering that the WP will spend a total of 3.5 hours at decontamination stations following closure of the inner lid (Ref. 5.7, p. 47), and that an average of 456 WPs are processed each year (assumption 4.3.19), the frequency of stem separation, and thus missile generation, in the presence of a WP is estimated to be 1.6×10^{-4} events per year. Therefore this event is considered credible.

Function Affected/Type of Analysis Required:

A pneumatic driven missile has the potential for affecting function 1.4.5.1.2.1, and thus, will require consideration in structural analyses.

Magnitude/Severity of Event:

Based on Reference 5.46 (p. 12) the velocity of a valve stem missile can be estimated using,

$$V = \sqrt{\frac{2\ P\ \pi D^2\ L}{4M}}$$

where,
- V = missile velocity (m/s),
- M = missile mass (kg),
- P = internal system pressure (Pa),
- D = diameter of the valve stem (m), and
- L = stroke length (m).

Assuming 0.5 kg valve stem with a 1 cm diameter, in a valve with a 5 cm packing gland (stroke length) and under a system pressure of 2.1 MPa, results in a missile with a velocity of 5.7 m/s.

7.2.2.5.2 Fire/Hydrogen explosion from transporter locomotive batteries

Discussion/Frequency:

No instances of battery explosion were identified in a review of operating experience of class 1E batteries at nuclear power plants (Ref. 5.48). Therefore, this event is not considered credible. However, fires associated with batteries and battery chargers have occurred in nuclear power plants (Ref. 5.53). Fire is further discussed in Section 7.2.2.6.

Function Affected/Type of Analysis Required:

No function affected. Not applicable.

Magnitude/Severity of Event:

Not applicable.

7.2.2.6 Fire and Other Thermal Hazards

This section discusses events which have the potential for creating thermal challenges for the WP. The following three such internal events were identified in Section 4.1.1.3:

- Int. Event 3. WP loaded with WF which exceeds its thermal design basis (thermal misload),
- Int. Event 13. Fire in the DC cell, and
- Int. Event 28. Transporter breakdown between WHB and North Portal (solar insolance)
- Int. Event 29. Thermal misload of WPs within an emplacement drift

7.2.2.6.1 WP loaded with WF that exceeds its thermal design basis (thermal misload)

Discussion/Frequency:

The probability that WP is accidentally loaded with fuel that exceeds its thermal design basis is estimated in Attachment VII and is summarized in Table 7.2.2.6-1 below. The probability/frequency estimates consider two types of human errors that the operator might commit when selecting the WP and/or the fuel assembly to be loaded: conceptual and selection. The conceptual represents intentionally selecting the wrong item based on the erroneous belief that it is the correct item. The latter (selection error) represents simply an unintentional selection of the wrong item while trying to select the correct one. A conceptual misload is only possible if the operator has a sufficient number of assemblies in the lag storage area that exceed the thermal design basis of a large WP (21 PWR/44 BWR). During anticipated operation, it is expected that loading of a small WP (12 PWR/24 BWR) would begin when a sufficient number of "high-heat" assemblies were staged, thus preventing the accumulation of a sufficient number of fuel assemblies (that exceed a large WP's thermal design basis) to fill a large WP. Therefore, if an operator commits a conceptual error and attempts to fully load a large WP with fuel assemblies greater than its design basis, the operator would be unable to completely fill the WP, and would be expected to recover from this error with a high probability of success. For the sake of comparison, use a human error recovery probability for the conceptual error equivalent to the physical verification process (a recovery action), i.e., multiply the conceptual human error probability (per WP) by 0.01 for the case where there is insufficient number of fuel assemblies to fill a large WP. Both scenarios are presented in Table 7.2.2.6-1. The conceptual error recovery probability is not included in the decision trees presented in Attachment VII.

Based on the conservatively estimated probabilities in Table 7.2.2.6-1 and number of PWR and BWR WPs indicated in Key Assumption 002 (Ref. 5.21), it is expected that there may be several WPs of both types that will have one assembly loaded that exceeds its thermal design basis. Based on the same information, it is not expected that a WP will be loaded with two or more assemblies (up to a full WP) that exceed its thermal design basis. However, based on the 10^{-6} events/year limit of credibility defined in 10CFR60 (see Section 4.2.2.2), both are considered credible. As indicated in Attachment VII, a more detailed analysis would most likely reduce the probability of the latter (two or more assemblies) and make it an incredible event.

Table 7.2.2.6-1. Summary of Frequencies of Possible Thermal Consequences Due to a Misload

Availability of SNF > design basis (DB)	PWR				BWR			
	Conceptual (per WP)	Selection (per WP)	WP/yr	Frequency (per yr)	Conceptual (per WP)	Selection (per WP)	WP/yr	Frequency (per yr)
Sufficient SNF > DB Available to Load Entire WP	4.28×10^{-5}	MF[A]: 1 Assy. 3.40×10^{-5} MF: 2 Assys. 1.10×10^{-9}	201	MF: 1 Assy. 1.54×10^{-2} MF: 2 Assys. 8.60×10^{-3}	4.98×10^{-5}	MF: 1 Assy. 1.48×10^{-5} MF: 2 Assys. 2.14×10^{-10}	120	MF: 1 Assy. 7.75×10^{-3} MF: 2 Assys. 5.98×10^{-3}
Insufficient SNF > DB Precludes Conceptual Errors	4.28×10^{-7}	MF: 1 Assy. 3.40×10^{-5} MF: 2 Assys. 1.10×10^{-9}	201	MF: 1 Assy. 6.92×10^{-3} MF: 2 Assys. 8.63×10^{-5}	4.98×10^{-7}	MF: 1 Assy. 1.48×10^{-5} MF: 2 Assys. 2.14×10^{-10}	120	MF: 1 Assy. 1.84×10^{-3} MF: 2 Assys. 5.98×10^{-5}

[A] MF indicates the mission failure (MF) definition for possible thermal consequence due to a misload. The two MF definitions considered are: one misloaded fuel assembly could lead to a possible thermal consequence or two misloaded fuel assemblies could lead to a possible thermal consequence.

Function Affected/Type of Analysis Required:

A thermal misload may impact peak WF temperatures, which affects function 1.4.5.1.1.2, and thus, will require consideration in thermal analyses.

Magnitude/Severity of Event:

No further description is necessary.

7.2.2.6.2 Fire in DC cell

Discussion/Frequency:

The PHA (Ref. 5.5) has indicated that there are very few sources of ignition in the areas associated with the WP, and limited fuel sources to support any postulated fire. The primary sources of ignition identified by the PHA for the MGDS areas which interface with the WP include the welding equipment in the WHB Disposal Container Cell, and electrical

shorts in cables, motors, or batteries. The main source of fuel available to support a fire was identified as cable insulation. Other possible fuel sources, such as lube oil or hydraulic fluid, are limited to small quantities in components such as bearings and rollers. The use of hydraulic fluids have been minimized, if not eliminated, by the use of pneumatics devices. Further specifics on the maximum temperatures and possible duration of fires which may result from the above mentioned ignition sources will not be available until a Fire Hazards Analysis is performed, and details of the fire suppression system are known. Statistics on the frequency of occurrence of fires in nuclear facilities can be found in a previous PRA analysis and is summarized here in Table 7.2.2.6-2 below.

Table 7.2.2.6-2. Nuclear Power Plant Fire Frequencies (Ref. 5.53, Table 1.2)

Location	Ignition Source	Frequency (per reactor-year)
Control Room	Electrical cabinets	1.9×10^{-2}
Cable Spreading Room	Electrical cabinets	3.2×10^{-3}
Diesel Generator Room	Diesel generator	2.6×10^{-2}
Battery Room	Batteries	3.2×10^{-3}
Switchgear Room	Electrical cabinets	1.5×10^{-3}
Auxiliary Building	Pumps	1.9×10^{-2}
Plant-wide components	Transformers	7.9×10^{-3}
	Junction box	1.6×10^{-3}
	Battery chargers	4.0×10^{-3}
	Air compressors	4.7×10^{-3}
	Cable fires caused by welding	5.1×10^{-3} (per year at power)

Based on the above information, the frequency of fires in compartments containing the WP may be in the range of 3×10^{-2} to 1×10^{-3} per year. Therefore, this event is considered credible.

Function Affected/Type of Analysis Required:

A fire involving the WP may result in increased thermal stresses in the WP barriers and basket and increased internal pressures, both of which may affect function 1.4.5.1.2.1, and thus, require consideration in structural analyses. The methods used for extinguishing the fire may also affect this function. A fire may also cause the peak cladding temperatures to exceed the 350°C limit for an SNF WP or the 400°C glass temperature limit for DHLW WPs (Ref. 5.21, DCWP 001 and 002). This may affect function 1.4.5.1.1.2, and thus, will require consideration in thermal analyses. The cladding temperature limit is primarily a long term requirement for postclosure to prevent cladding failure by creep rupture. The NRC standard review plan for dry cask storage (Ref 5.19, p. 4-2) indicates that the peak

cladding temperatures should remain below 570°C for short term accident conditions, such as fires.

Magnitude/Severity of Event:

If an analysis of WP response to a postulated fire is desired prior to completion of a Fire Hazards Analysis for the MGDS facilities, the NRC standard review plan for dry cask (Ref. 5.19, p. 4-9) indicates that the fire parameters included in 10CFR71.73 have been accepted for characterizing the heat transfer during the fire. The 10CFR71.73(c)(3) fire evaluation involves exposure of the whole cask for not less than 30 minutes to a heat flux not less than that of a radiation environment of 800°C with an emissivity coefficient of at least 0.9. For purposes of calculation the surface absorptivity must be either that value which the package may be expected to possess if exposed to a fire or 0.8, which ever is greater. In addition, when significant, convective heat input must be included on the basis of still ambient air at 800°C.

7.2.2.6.3 Transporter breakdown between WHB and North Portal (solar insolance)

Reference 5.7 indicates that mean-time-between-failure for a major transporter failure is 6000 hours, and the mean-time-to-repair such a failure is 48 hours. Based the North Portal area map in the *MGDS ACD Report* (Ref. 5.6, Vol. II, p. 7-25) the distance between the WHB and the North Portal is ≈122 m (400 ft). At a speed of 8 km/hr (Ref. 5.37) the WP transporter spends ≈1 minute per trip, or 7.6 hours per year (1 minute * 456 WPs/year). The frequency of breakdowns between the WHB and the North Portal is then 1.26×10^{-3} per year (7.6 hr/year/6000 hrs). Therefore, this event is considered credible.

Function Affected/Type of Analysis Required:

Prolonged exposure to solar insolance may impact peak WF temperatures, which affects function 1.4.5.1.1.2, and thus, will require consideration in thermal analyses.

Magnitude/Severity of Event:

The NRC standard review plan for dry cask storage indicates that solar insolation values from 10CFR71 may be used. 10CFR71.71(c) indicates solar insolation of 400 g*cal/cm^2 for curved surfaces in a 12 hour period.

7.2.2.6.4 Thermal misload of WPs within an emplacement drift

Discussion/Frequency:

This event involves emplacing WPs closer than the minimum required spacing, and/or placement of too many high heat WPs in sequence. As the method for thermally loading the drifts has not yet been established beyond specification of a general repository thermal

loading, there is insufficient information to evaluate the frequency of this event, or the impact on the WP thermal performance if it were to occur. This section is primarily intended to serve as a place holder to indicate that future consideration of this event may be necessary once drift loading practices have been further defined.

Function Affected/Type of Analysis Required:

Not Applicable.

Magnitude/Severity of Event:

Not Applicable.

7.2.2.7 Fuel Rod Rupture/Internal Pressurization

Discussion/Frequency:

The standard review plan for dry cask storage systems indicates that accident analyses for dry storage casks should assume, for the purpose of calculating internal cask pressures, that 100% of the fuel rods are ruptured (Ref. 5.19, pp. 2-12, 2-13) regardless of credibility.

Function Affected/Type of Analysis Required:

The internal pressure of the WP may affect function 1.4.5.1.2.1, and thus will require consideration in structural design analyses.

Magnitude/Severity of Event:

To estimate the pressure inside a WP as a result of various percentages of fuel rods ruptured, it is necessary to know three parameters: the pressure inside the spent fuel rod at a given temperature, the internal void space of the fuel rod, and the internal void space of the WP. The pressure inside the fuel rod at a temperature of 125°F (51.7°C) is assumed to be 1200 psig (8.4 MPa) (see assumption 4.3.6) based on information from NRC Regulatory Guide 1.25. The internal void space for a B&W Mark B PWR fuel assembly and a GE 8x8 BWR fuel assembly were calculated in Attachment V to be 4.59×10^{-3} m^3 and 1.14×10^{-3} m^3, respectively. The internal void space in the 21 PWR and 44 BWR WPs were calculated in Attachment VI, using the dimensions from the engineering sketches in Attachment I, to be 4.52 m^3 and 4.43 m^3, respectively. The pressure of the helium fill gas in the WP (Ref. 5.21, DCWP 004) is assumed to be atmospheric at a temperature of 25°C. The moles of gas (n) in both the rods and the filled WP were calculated from the pressures (P) and temperatures (T) above, using the ideal gas law: PV=nRT (where R is the gas constant, 8.314 kJ/kmol*K). The WP pressure as a function of a given gas temperature and percent breached rods was then calculated using the ideal gas law, the total moles of gas, and WP + breached rod void space. This calculation is given in Attachment V, and the

results are summarized in Table 7.2.2.7-1 below. An additional safety factor of 1.5 is assumed to account for the possibility higher burned fuel than is covered under the 1200 psig assumption (see assumption 4.3.6).

Table 7.2.2.7-1. WP Internal Pressure as a Function of Gas Temperature and % Breached Rods

Gas Temperature (°C)	21 PWR/44 BWR Pressure (MPa)			
	1.5 x 100% Rods Breached	100% Rods Breached	10% Rods Breached	1% Rods Breached
25	0.39 / 0.29	0.26 / 0.19	0.12 / 0.11	0.10 / 0.10
50	0.42 / 0.30	0.28 / 0.20	0.13 / 0.12	0.11 / 0.11
100	0.50 / 0.35	0.33 / 0.23	0.15 / 0.14	0.13 / 0.13
200	0.62 / 0.45	0.41 / 0.30	0.19 / 0.17	0.16 / 0.16
300	0.75 / 0.54	0.50 / 0.36	0.23 / 0.21	0.20 / 0.20
350	0.81 / 0.59	0.54 / 0.39	0.25 / 0.23	0.22 / 0.21
500	1.01 / 0.72	0.67 / 0.48	0.30 / 0.28	0.27 / 0.27

7.2.2.8 Criticality Safety

This section discusses events with implications for criticality safety. The following two such internal events were identified in Section 4.1.1.3:

Int. Event 2. WP loaded with WF which exceeds its criticality design basis, and
Int. Event 12. WP flooding due to decon unit failure or pipe break.

7.2.2.8.1 WP loaded with WF that exceeds its criticality design basis

Discussion/Frequency:

The probability that a WP is accidentally loaded with fuel that exceeds its criticality design basis is estimated in Attachment VII and is summarized in Table 7.2.2.8-1 below. The probability/frequency estimates consider two types of human errors that the operator might commit when selecting the WP and/or the fuel assembly to be loaded: conceptual and selection. The conceptual represents intentionally selecting the wrong item based on the erroneous belief that it is the correct item. The latter (selection error) represents simply an unintentional selection of the wrong item while trying to select the correct one. Unlike the analysis results presented in 7.2.2.6.1 dealing with possible thermal consequences of a misload, there is no error recovery for conceptual human errors, since the expected number

of fuel assemblies to be placed in waste packages of various criticality design limits are the same, i.e., the operator will not necessarily "run out" of fuel assemblies to load into a waste package.

Table 7.2.2.8-1. Summary of Frequencies of Possible Criticality Consequences Due to a Misload

WP Type	Conceptual (per WP)	Selection (per WP)	WP/yr	Freq. Conceptual (Full WP) Misload (yr^{-1})	Freq. Selection Misload (yr^{-1})	Mission failure^ Frequency (yr^{-1})
PWR	4.80×10^{-5}	1 Assembly 5.02×10^{-5} 2 Assemblies 2.35×10^{-9}	201	9.65×10^{-3}	1 Assembly 1.01×10^{-2} 2 Assemblies. 2.35×10^{-9}	MF: 1 Assy. 1.97×10^{-2} MF: 2 Assys. 9.65×10^{-3}
BWR	5.63×10^{-5}	1 Assembly 8.56×10^{-5} 2 Assemblies 6.73×10^{-9}	120	6.76×10^{-3}	1 Assembly 1.03×10^{-2} 2 Assemblies 8.08×10^{-7}	MF: 1 Assy. 1.70×10^{-2} MF: 2 Assys. 6.76×10^{-3}
BWR w/o no absorber design	5.9×10^{-7}		120	MF: 1 Assembly (misload of 1 assembly or a full WP) 7.08×10^{-5}		

^ Mission failure (MF) definition for possible criticality consequence due to a misload. This is simply the sum of the frequencies of the conceptual and selection errors. The two MF definitions considered are: one misloaded fuel assembly could lead to a possible criticality consequence or two misloaded fuel assemblies could lead to a possible criticality consequence.

For all WP types (PWR/BWR) and design options considered, entirely loading the WP with fuel that exceeded the criticality design basis was an unlikely but credible event. However, for the WP design option that includes both a PWR and a BWR WP with a no-absorber basket (the primary option recommended in Ref. 5.27), a misload of a single assembly that exceeds the design basis is considered a likely event, and a misload of an entire WP has a frequency that is just barely within the upper bound of the definition of an unlikely event (almost likely).

Function Affected/Type of Analysis Required:

A criticality misload may impact a WPs ability to meet criticality safety limits, which affects function 1.4.5.1.1.1, and thus, will require consideration in criticality analyses.

Magnitude/Severity of Event:

No further description is necessary.

7.2.2.8.2 WP flooding due to decon unit failure or pipe break

Discussion/Frequency:

Flooding of the WP could possibly result from an unisolable overhead pipe break in one of the compartments above the loading cell. Current WHB design information (Ref. 5.7) indicate that the decontamination units in this cell are equipped only with CO_2 pelletizers, and do not represent a possible source of water for flooding. The frequency of failure for a generic 10 foot section of pipe is 5×10^{-10} per hour (Ref. 5.11). Since the *MGDS ACD Report* (Ref. 5.6, Vol. II, pp. D-43 to D-58) indicates that there will be HVAC equipment (which uses cooling coils and water spray) in the rooms above the loading cell, and that the fire protection system will also utilize water spray (Ref. 5.6, Vol. II, p. 7-111), it is assumed that there will be at least one 10 foot section of pipe somewhere above an open disposal container (assumption 4.3.21). At 20 minutes per assembly (Ref. 5.7, p. 47) it will take 4 to 14 hours to load a WP (average of 9 hours), depending on the size of the WP. At an average of 322 SNF WPs per year this yields a frequency of pipe break over a loaded WP of 1.5×10^{-6} events/year, making this a credible event. Further details on the design of the WHB may indicate that there are no runs of water piping above the loading cell, and eliminating the possibility of this failure.

Function Affected/Type of Analysis Required:

Flooding of the WP may affect function 1.4.5.1.1.1. 10CFR131(h) (see Section 4.2.2.1) indicates that criticality safety limits may not be exceeded unless two unlikely events occur. 10CFR60.2 indicates that Category 2 events are defined as being "unlikely", and the section-by-section analysis of 10CFR60.136 (see Section 4.2.2.2) indicates that Category 2 events have frequencies between 10^{-2} and 10^{-6} events/year. Therefore, since flooding falls within the frequency range of an unlikely event, it must be considered in criticality analyses demonstrating that the safety limits are not exceeded.

Magnitude/Severity of Event:

Full flooding of the WP with unborated water.

7.2.2.9 Through-Wall Manufacturing Defect

This section discusses occurrence of through-wall manufacturing defects that would essentially render the WP breached at emplacement.

Discussion/Frequency:

Previous postclosure performance assessments (Refs. 5.30 & 5.31) have considered that a small fraction of WPs will essentially be breached at emplacement due to the occurrence of through-wall manufacturing defects. The previous assumptions of the fraction of

packages assumed to contain such a defect have ranged from 0.05% up to 1% of the total WP population. However, in all cases, the assumptions appear to have been arbitrary and were generally intended to provide added conservatism to the performance assessment. The purpose of this analysis is to provide a calculation to estimate a more realistic frequency of WP breaches due to manufacturing defects.

This analysis will consider two manufacturing processes for the inner barrier: *cylinder within a cylinder* and *weld clad inner barrier*. WP manufacturing defects can be postulated to occur during the two welding processes (see assumption 4.3.7) to which the WP is subject: welding of base metal sections (and bottom lids) and/or inner barrier cladding during fabrication of the disposal container, and welding of the lids onto the WP to seal it after SNF has been loaded. The types of manufacturing (weld) defects that may occur include cracks, lack-of-fusion, porosity, and slag inclusions. For this analysis, all defects will be treated as a localized reduction in the wall thickness of a barrier and no distinction will be made between surface breaking and non-surface breaking defects. To add conservatism, for either manufacturing process, two independent weld defects in the inner and outer barriers are assumed to provide a direct path out of the WP (assumption 4.3.5).

Several studies of weld defect depth distributions and densities have been performed in the past. Recently, Chapman (Ref. 5.32) has developed a computer simulation for predicting defect density and depth distributions for post-inspection welds in nuclear components, and validated this simulation against actual data from nuclear pressure vessel welds. For the 217.5 mm thick sub-arc welds of the Midland reactor vessel, the probability density function (PDF) produced by this simulation predicted that the probability of a given defect depth being 50% through-wall was approximately 1×10^{-7}, with the probability continuing to decrease for larger defect depths. This was found to be conservative when compared to actual Midland vessel data. Other PDFs developed for 25.4 mm and 51 mm nuclear welds estimated the probability of 50% through-wall defects to be approximately 6×10^{-4} and 4×10^{-6}, respectively.

Extrapolating for a weld thickness of 100 mm and using the 50% through-wall defect probability to conservatively represent 100% through-wall defects for a sub-arc welded WP outer barrier, a 7×10^{-6} probability of 50% through-wall defect can be estimated. Then, using the simulation's prediction of 390 defects per m^3 of Midland weld material (Ref. 5.32 and assumption 4.3.8), a conservative probability of 2.7×10^{-3} through-wall defects per m^3 of weld can be estimated. Details of the analysis process are provided in Attachment III. Current estimates (Ref. 5.33) indicate that a WP outer barrier will require approximately 0.017 m^3 of weld material (21 PWR WP estimate). This results in a conservative estimate of approximately 4.8×10^{-5} 100% through-wall defects per *outer barrier*.

Extrapolating for a weld thickness of 20 mm and using the 50% through-wall defect probability to conservatively represent 100% through-wall defects for inner barrier welds (assumption 4.3.6), a 6×10^{-4} probability of 50% through-wall defect can be estimated.

Then, using the simulation's prediction of 390 defects per m^3 of Midland weld material (Ref. 5.32 and assumption 4.3.8), a conservative probability of 2.3×10^{-1} through-wall defects per m^3 of weld can be estimated. Details of the analysis process are provided in Attachment III. Current cost estimates (Ref. 5.33) indicate that a WP inner barrier using the *weld clad inner barrier* approach will require approximately 0.498 m^3 (see Attachment III for calculational details) of weld material. This results in a conservative estimate of approximately 1.2×10^{-1} 100% through-wall defects per *inner barrier.*

For the *cylinder in a cylinder* approach, assume 20% of the weld material required for the outer barrier (0.019 m^3 * 0.2 = 0.004 m^3). This results in a conservative estimate of approximately 7.5×10^{-4} 100% through-wall defects per *inner barrier.*

Reference 5.23 provides additional field data which can be used to evaluate the reasonableness of the barrier defect rates developed from the Chapman simulation. In one case, out of 20,000 pressure vessels constructed to Class I (high quality) requirements of the design codes recognized in the United Kingdom, there were 17 occurrences of external leakage or rupture caused by a pre-existing defect in weld or base material or by use of an incorrect material (Ref. 5.23, p. 7). This yields a failure rate due to manufacturing defects of 8.5×10^{-4} per vessel. This reference also indicates that the rate of CANDU fuel bundle leakage due to manufacturing defects is 5.6×10^{-5} per bundle (Ref. 5.23, p. 8). As each bundle is composed of either 28 or 37 individually sealed fuel elements, the above defect rate is approximately 2×10^{-6} per element. Finally, Reference 5.23 estimates a defect failure rate for CANDU pressure tubes of 1.7×10^{-4} per tube, based on the fact that no through-wall defects had been noted in these tubes at the time the document was written.

Since a direct pathway to the environment is assumed to exist for either inner barrier manufacturing process (assumption 4.3.5), an estimation of the total through-wall breach due to manufacturing (weld) defects will use the more conservative value of the *weld clad inner barrier* approach. Assuming independence between inner and outer barrier weld failures, a probability of 5.8×10^{-6} through-wall defects per WP can be estimated. Based on the Key Assumption 003 (Ref. 5.21) of 10,938 total WPs, and the frequency of WP through-wall defects estimated above, the probability that there will be one WP with a through-wall manufacturing defect in the MGDS is estimated to be 6.3×10^{-2}. However, at 456 WPs per year, this yields an annual frequency of 2.6×10^{-3}, making this an unlikely, but credible event for preclosure.

Function Affected/Type of Analysis Required:

While this event affects function 1.4.5.1.2.1 and is a DBE precursor, it does not require further WP analysis. In addition, a through-wall defect by itself will not result in a release, in the absence of a mechanism for breaching the contained WF. Furthermore, if the WF were to spontaneously breach, the radiological consequences would be bounded by the non-mechanistic DBE analysis currently being performed by the Repository Surface and Subsurface groups.

Magnitude/Severity of Event:

Not Applicable.

7.3 Identification of Bounding Design Basis Events

This section summarizes the internal and external events discussed in Sections 7.1 and 7.2, and identifies bounding structural, thermal, and criticality design basis events.

The majority of the events identified in the above sections affect function 1.4.5.1.2.1, and thus must be specifically addressed or bounded by structural analyses to determine the impact on the WP. Table 7.3-1 groups the structural events from the above sections and indicates the estimated frequency of each event, whether or not it was considered credible based on the criteria discussed in Section 4.2, the specific section which evaluated the event, and the estimated severity of the event from a WP perspective. The groups identified here are for the purpose of this analysis only, and may not necessarily apply to other DBE analyses. Credible events which are considered to be bounding for a given group (based on severity) are so indicated with a check mark (✔) in the far right column. For the dropped objects group, the bounding event was the one with the object that had the highest kinetic energy (KE) at impact (KE=mass*drop height*acceleration of gravity). The area of impact was assumed to be the same for all objects (see assumption 4.3.24). For events involving WP drops or collisions, the bounding event was the one with the highest velocity at impact (for drop events, $v=[2*\text{acceleration of gravity}*\text{drop height}]^{1/2}$). Events which are currently borderline incredible, and would be bounding for their group were they to be considered credible, are so indicated with an "✘". These events may wish to be considered in case future analyses or design changes cause them to be reclassified as credible.

The final structural group "thermal stresses" includes all of the same events which affect function 1.4.5.1.1.2, the thermal performance of the WP. Therefore, a separate table is not provided, and the bounding thermal event is the same as the bounding structural event in the thermal stresses group.

Due to the short list of events affecting function 1.4.5.1.1.1, a separate table for criticality has also not been developed. Section 7.2.2.8 indicates that both of the identified events relating to criticality safety are unlikely events. Therefore, based on 10CFR60.131(h), the WP must be shown to meet criticality safety limits (5% margin + bias and uncertainty) given the occurrence of each event, as follows:

- WP flooded and fully loaded with criticality design basis fuel, and
- WP dry and fully loaded with fuel which exceeds the criticality design basis.

Furthermore, Section 7.2.2.8 also indicates that, for design options which include a WP with a no-absorber basket, misload of a single assembly is considered a likely event and

thus should be included in the analysis of the flooded and fully loaded WP. The frequency of a full WP misload for this design option makes it a borderline unlikely event (almost likely). If a full misload of a no-absorber WP were considered likely, then it would have to be evaluated in combination with a flooded WP. Therefore, a more detailed analysis of WP misload should be performed once more information is available on WP loading procedures, to remove the conservatism of this analysis.

Finally, if the structural analyses determine that basket collapse will result from one of the structural design basis events, then this will also have to be considered. If collapse results from a likely event (frequency > 10^{-2} events/year) then it will have to be considered in combination with the above two events. If collapse results from an unlikely event, then it need only be considered by itself (i.e., WP dry, fully loaded with design basis fuel, with a collapsed basket).

Table 7.3-1. Identification of Bounding Structural and Thermal Events

Event Group	Event	Estimated Frequency (per year)	Credible (Y/N)	Discussion Section	Magnitude/Severity	Bounding for Group (DBE)
Falling Objects - Side Impact	Static fracturing/rockfall[A]	$< 1\times10^{-4}$	Y	7.1.5	25 MT rock falling 3.1 m (Impact kinetic energy (KE) = 7.6×10^{5} J)	✔
	Section of emplacement drift concrete liner falls onto WP[A]	$< 1\times10^{-4}$	Y	7.2.2.1.3	5.5 MT falling 2.9 m (Impact KE = 1.1×10^{5} J)	
	Emplacement drift gantry drops a WP onto another	$< 1\times10^{-4}$	N	7.2.2.1.4	worst case: 50 MT 21 PWR WP falls ≈0.6 m onto 12 PWR WP (Impact KE=2.9×10^{5} J)	✘
Falling Objects - End Impact	WF drop onto WP during loading	8.8×10^{-2}	Y	7.2.2.1.1	542 kg falling 4.6 m (Impact KE = 2.4×10^{4} J)	
	Handling equipment drop onto WP	1.9×10^{-4}	Y	7.2.2.1.2	2.3 MT falling 2 m (Impact KE = 4.5×10^{4} J)	✔
Vertical Drops and End Collisions	WP vertical drop from DC cell crane	2.9×10^{-2}	Y	7.2.2.2.1	2 m drop maximum (Impact velocity = 22 km/hr)	✔
	WP rail car rolls out of transporter	2.3×10^{-4}	Y	7.2.2.2.3	1.3 m drop (Impact velocity = 18 km/hr)	
	Transporter derailment w/o rollover but loss of rail car restraint	1.5×10^{-2}	Y	7.2.2.4.2	Impact velocity = 8 km/hr	
	Transporter runaway	2×10^{-8} to 5×10^{-5}	N	7.2.2.4.3	Impact velocity = 63 km/hr (may wish to consider size of impact limiters necessary to prevent breach if this event were credible)	✘
	Emplacement gantry lifts WP to insufficient height causing collision with shadow shield	n/a	Y	7.2.2.4.5	Impact velocity = 3 km/hr	

Table 7.3-1. Identification of Bounding Structural and Thermal Events

Event Group	Event	Estimated Frequency (per year)	Credible (Y/N)	Discussion Section	Magnitude/Severity	Bounding for Group (DBE)
Horizontal Drops and Side Collisions	WP horizontal drop from WHB gantry	1.6×10^{-2}	Y	7.2.2.2.2	1.7 m maximum (Impact velocity = 21 km/hr)	
	Emplacement drift gantry drops WP	8.2×10^{-3}	Y	7.2.2.2.4	2.4 m maximum (Impact velocity = 25 km/hr)	✔
	WP collides/bumps other WP while being placed in DC cell lag storage	n/a	Y	7.2.2.4.1	Impact velocity = 0.9 km/hr	
	Transporter derailment w/ rollover	1.5×10^{-2}	Y	7.2.2.4.2	1.3 m drop (Impact velocity = 18 km/hr)	
Puncture Hazards	WP horizontal/vertical drop onto sharp object	n/a	Y	7.2.2.2.5	1.9 m horizontal drop onto support or 2.4 m horizontal drop onto pier, whichever is worse	✔
Tip-over and Slap-down	Slap down due to vertical drop or seismic event	5×10^{-4} for small WP $<1 \times 10^{-4}$ for all others	Y	7.2.2.3	WP tips over from a vertical position and slaps down onto a flat surface	✔
Seismic Activity	Subsurface fault displacement	1.4×10^{-27}	N	7.1.4	n/a	
	Earthquake	1×10^{-4}	Y	7.1.3	Maintain structural integrity and prevent tip-over for 0.66 g peak horz. & vert. ground acceleration	✔
Missile Hazards	Pressurized system missile	1.6×10^{-4}	Y	7.2.2.5.1	0.5 kg missile at 5.7 m/s	✔
Fuel Rod Rupture/Internal Pressurization	100% fuel rod rupture and fission gas release	n/a	Y	7.2.2.7	See Table 7.2.2.7-1 for internal pressure as a function of gas temperature	✔

Table 7.3-1. Identification of Bounding Structural and Thermal Events

Event Group	Event	Estimated Frequency (per year)	Credible (Y/N)	Discussion Section	Magnitude/Severity	Bounding for Group (DBE)
Thermal Stresses	WP loaded with WF which exceeds its thermal design basis (thermal misload)	PWR: 6.9×10^{-3} BWR: 1.8×10^{-3}	Y	7.2.2.6.1	WP misloaded with one assembly which exceeds the thermal design basis. More than one assembly is considered incredible.	
	Fire in DC cell	2×10^{-3} to 3×10^{-2}	Y	7.2.2.6.2	Exposure of whole WP for not less than 30 minutes to a heat flux not less than that of a radiation environment of 800°C with an emissivity coefficient of at least 0.9. Surface absorptivity must be at least 0.8. If significant convective heat transfer must be considered on the basis of still air at 800°C.	✔
	Transporter breakdown between WHB and North Portal (solar insolance)	1.3×10^{-3}	Y	7.2.2.6.3	400 g*cal/cm^2 for 12 hours	
	Static fracture/rockfall - burial by debris[A]	$< 1 \times 10^{-4}$	Y	7.1.5	WP covered by rubble from rockfall	

Notes: A - These events are listed independently from the seismic activity event because they have the possibility to be caused by events other than those related to seismic activity. However, for this analysis, the frequencies of these other causes were estimated or assumed to be below the limit of credibility, and therefore, the indicated frequency considers only seismic activity.

8. Conclusions

In compliance with the M&O Quality Administrative Procedures, the design results presented in this document can not be used for procurement, fabrication, or construction unless properly identified, tracked as TBV, and controlled by the appropriate procedures. Table 8-1 below summarizes the list of bounding WP design basis events for preclosure developed in Section 7. In addition, events involving transporter runaway and WP drop onto a WP in the emplacement drift were currently considered incredible, but may wish to be considered due to their severity in the event that further analysis or design changes result in their reclassification as credible events. Finally, the frequency of a full misload of the no-absorber WP is just below 10^{-2} event/year definition of unlikely in 10CFR60. This suggests that other administrative controls on WP loading in addition to those assumed here (see assumption 4.3.15), and/or a more detailed analysis of misloads, may need to be considered.

Table 8-1. Bounding WP Design Basis Events

Analysis Type	Event Group	Magnitude/Severity
Structural	Falling Objects - Side Impact	25 MT rock falling 3.1 m
	Falling Objects - End Impact	2.3 MT falling 2 m
	Vertical Drops and End Collisions	2 m drop
	Horizontal Drops and Side Collisions	2.4 m drop
	Puncture Hazards	1.9 m horizontal drop onto support or 2.4 m horizontal drop onto pier, whichever is worse
	Tip-over and Slap-down	WP tips over from a vertical position and slaps down onto a flat surface
	Seismic Activity	Maintain structural integrity and prevent tip-over for 0.66 g peak horz. & vert. ground acceleration
	Missile Hazards	0.5 kg missile at 5.7 m/s
	Fuel Rod Rupture/Internal Pressurization	See Table 7.2.2.7-1 for internal pressure as a function of gas temperature
Thermal and Structural	Thermal Stresses & Peak WF Temperature	Exposure of whole WP for not less than 30 minutes to a heat flux not less than that of a radiation environment of 800°C with an emissivity coefficient of at least 0.9. Surface absorptivity must be at least 0.8. If significant convective heat transfer must be considered on the basis of still air at 800°C.
Criticality	Criticality Safety	WP flooded and fully loaded with design basis fuel except for one assembly which exceeds the design basis
		WP dry and fully loaded with fuel which exceeds the design basis
		WP dry, fully loaded with design basis fuel except for one assembly which exceeds the design basis, with collapsed basket

9. Attachments

The attachments are listed below. Each attachment is identified by it's specific number, name, date, and number of pages.

Attachment	Description	Date	Number of Pages
I	Engineering Sketches of WP & Supports	3/10/97	31
II	Fuel Assembly Handling Data & Drop Rate Calculation (Excel spreadsheet: fueldrop.xls)	3/5/97	18
III	Calculation Details to Support the Estimated Frequency of Through-Wall Manufacturing Defects (Excel spreadsheet: defect2.xls)	3/14/97	9
IV	Transporter Derailment Frequency Calculation (Excel spreadsheet: drfreq.xls)	3/5/97	3
V	WP Internal Pressure as a Function of Gas Temperature for Normal, Off-Normal, and Accident Conditions (Excel spreadsheet: presur97.xls)	3/5/97	2
VI	Intact AUCF WP Internal Volumes (Mathcad sheet: volume.mcd)	3/14/97	3
VII	Misload Frequency Calculation (Excel spreadsheet: misload.xls)	3/16/97	48
VIII	Transporter Runaway Frequency and Severity Estimates (Excel spreadsheet: transprt.xls)	3/14/97	2
IX	Vendor Information on CO_2 Decontamination Units from Alpheus Cleaning Technologies Corp.	3/5/97	4

Table 1

WP TYPE	SIZE (diameter x length)	DISTANCE	WP LOADED MASS (kg)
21 PWR UCF	1649.7 x 5335	1758	50,423 est.
44 BWR UCF	1603.9 x 5335	1731	46,424 est.
12 PWR UCF	1297.7 x 5335	1555	32,236 est.
4 PACK DHLW	1786.0 x 3790 est.	1836	30,511 est.
5 PACK DHLW	1970.0 x 3790 est	1943	35,692 est.

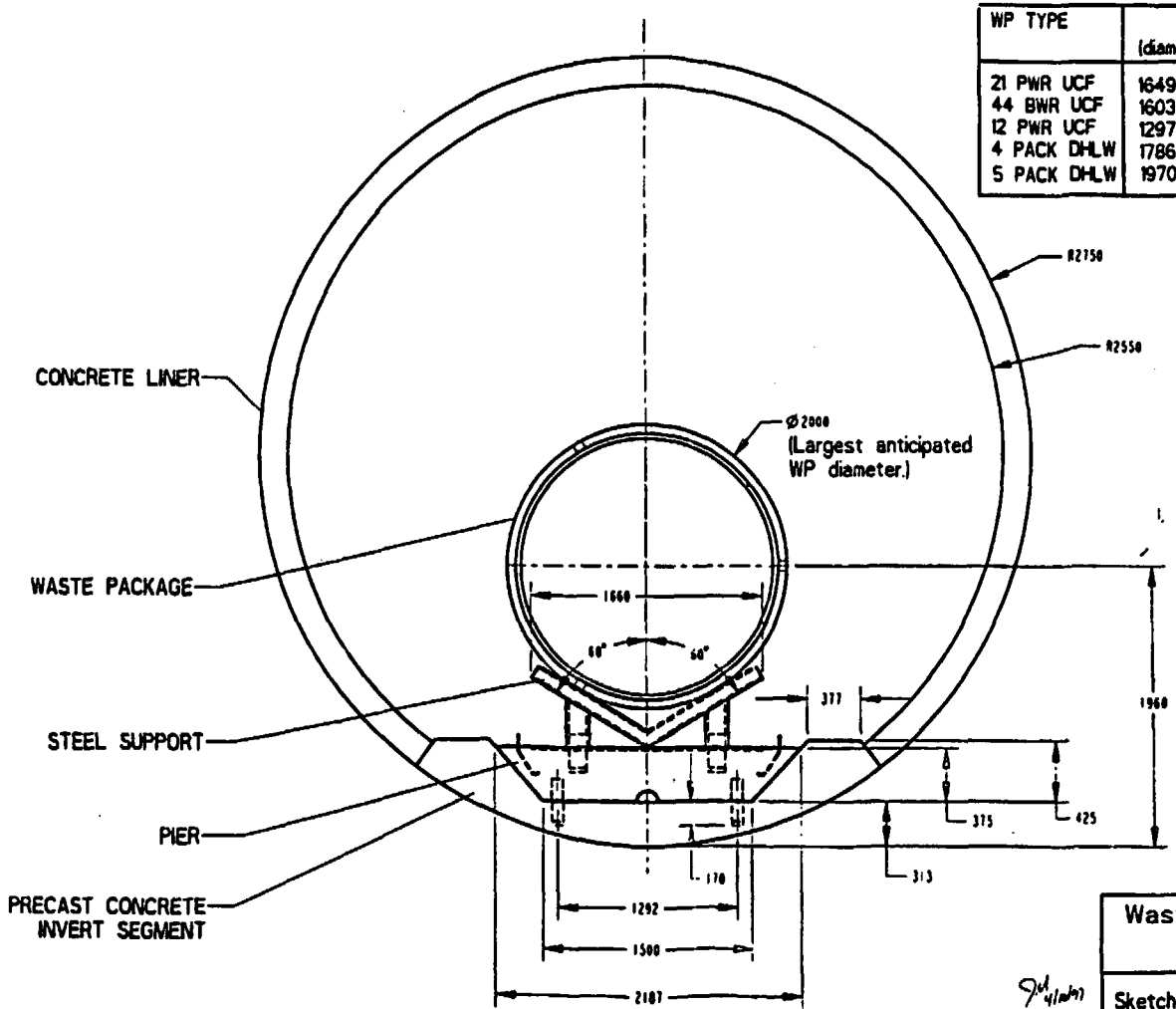

(The distance varies with different WP sizes. See Table 1

" For Information Only "

Waste Package Support Layout
(600 mm Gantry Wheel)

Sketch Number: SK-0011.Rev03
~~Originator~~ Sketched by: H. Wang
Date: 2/25/97
File: /users/wang/proe/supprt1_invertlow/sk0011_r3.drw

SCALE 0.035

Units: mm

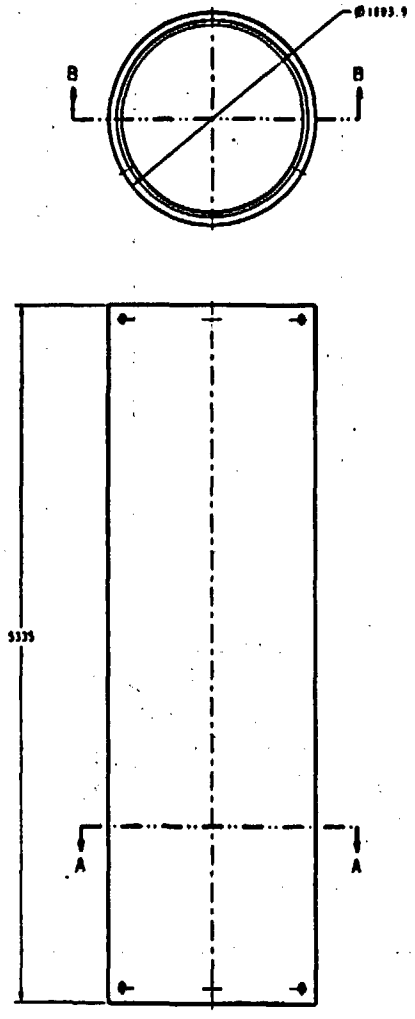

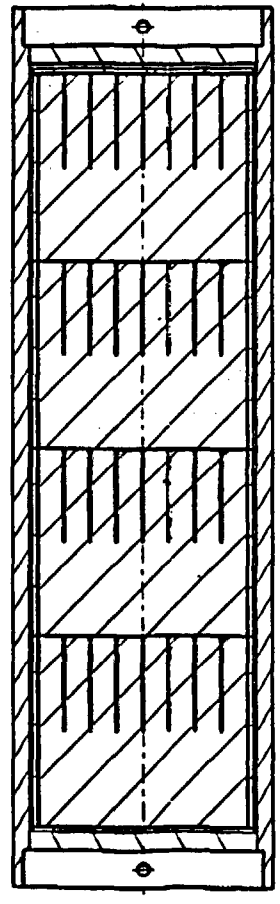

SECTION B-B
SCALE 0.070

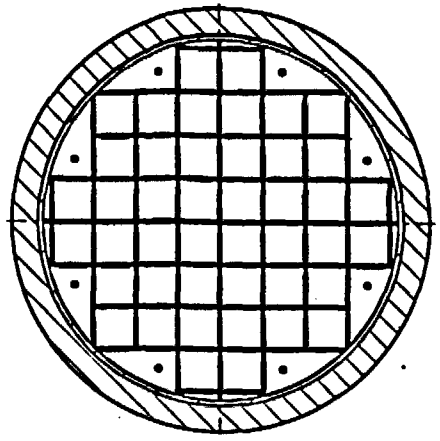

SECTION A-A
SCALE 0.125

" FOR INFORMATION ONLY "

UNITS: mm

44-BWR UCF WASTE PACKAGE ASSEMBLY

SKETCH NUMBER: SK-0017 REV 00
ORIGINATOR: GENE CONNELL 03/04/97 3/10/97
DATE: 03-06-97
FILE: /users/pro_library/checkout/44bwr_ucf/sk0017.dwg

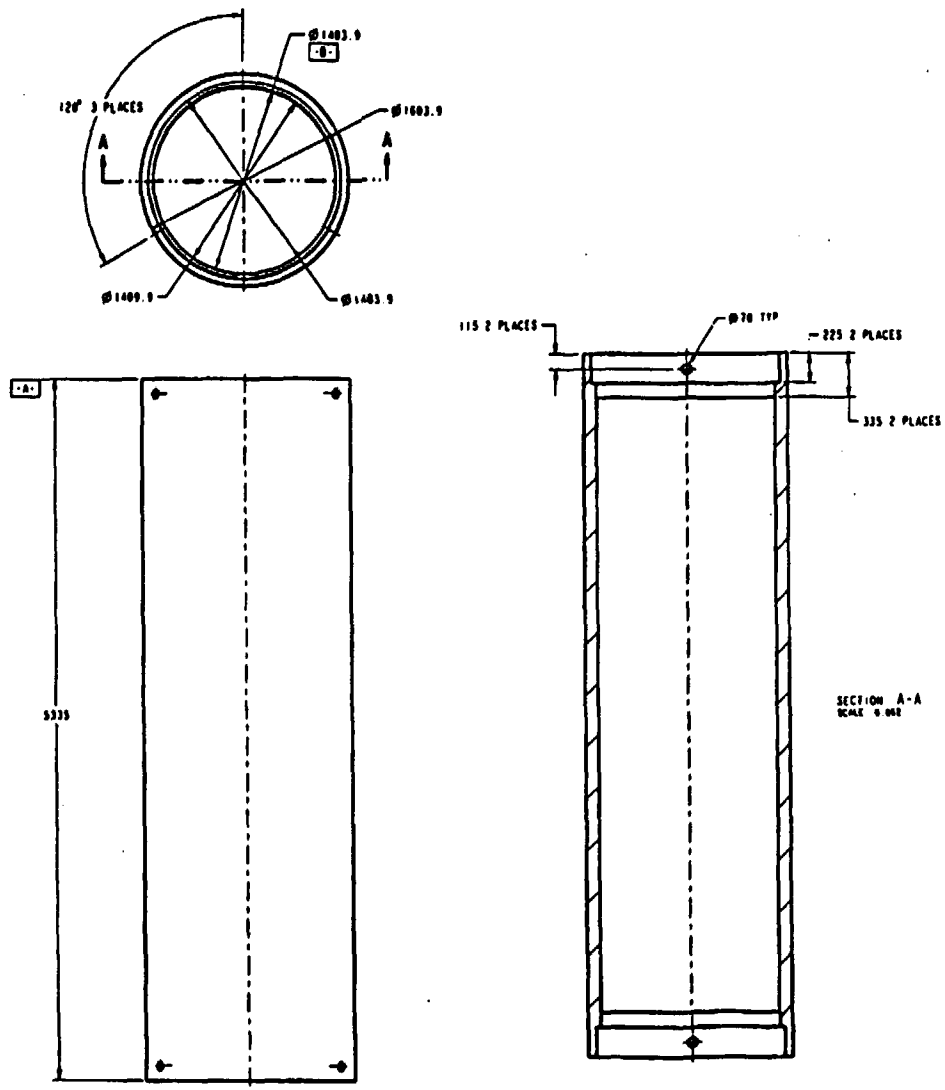

" FOR INFORMATION ONLY "

UNITS: mm

44-BWR UCF WASTE PACKAGE OUTER BARRIER	
SKETCH NUMBER	SK-0018 REV 00
~~ORIGINATOR~~ Sketched by:	GENE CORNELL
DATE	03-06-97
FILE	/users/pro.library/checkout/44bwr.ucf/sk0018.dwg

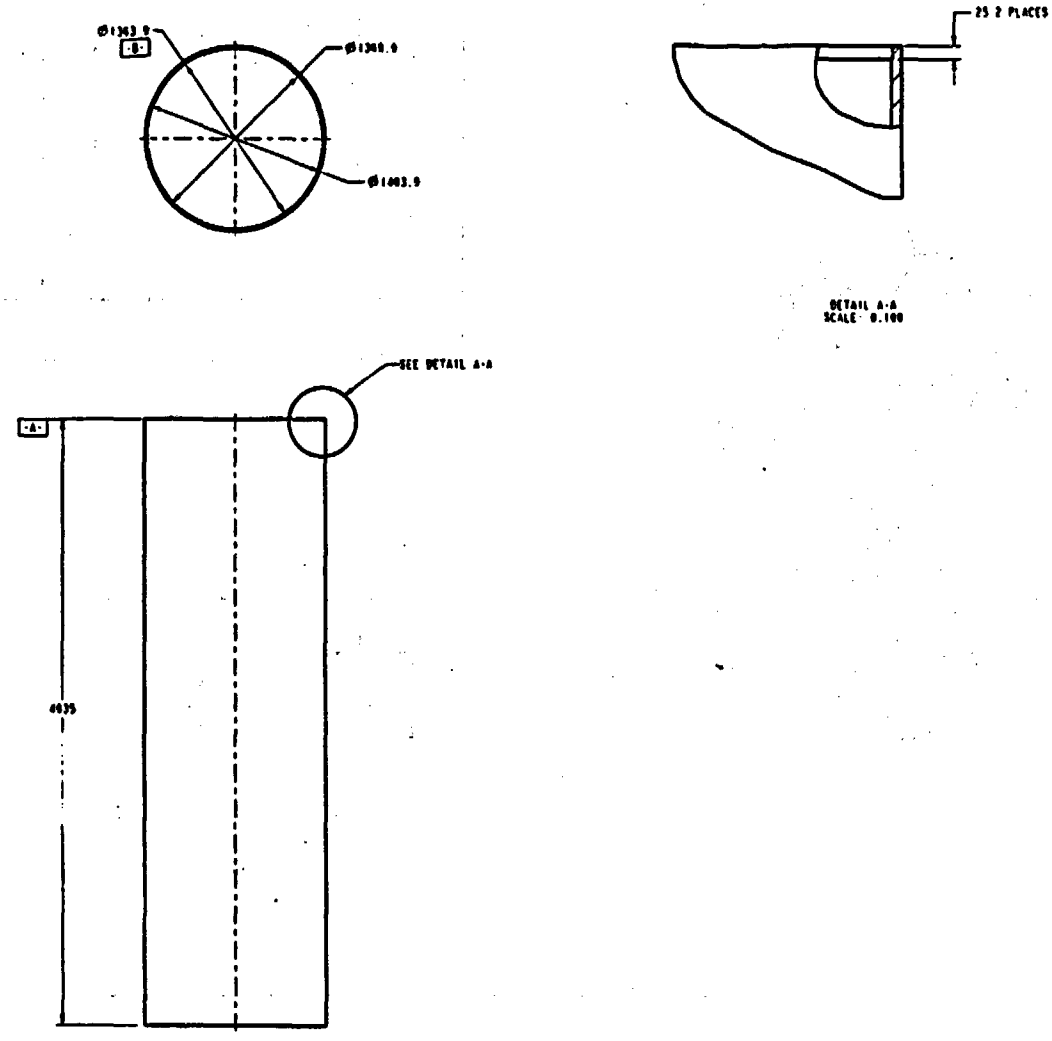

UNITS: mm

" FOR INFORMATION ONLY "

44-BWR UCF WASTE PACKAGE INNER BARRIER			
SKETCH NUMBER	SK-0019 REV 00		
Sketched by: OPERATOR	GENE CONNELL	03/10/97	3/10/97
DATE	03-06-97		
FILE	/users/pro_library/checkout/44bwr.ucf/sk0019.dwg		

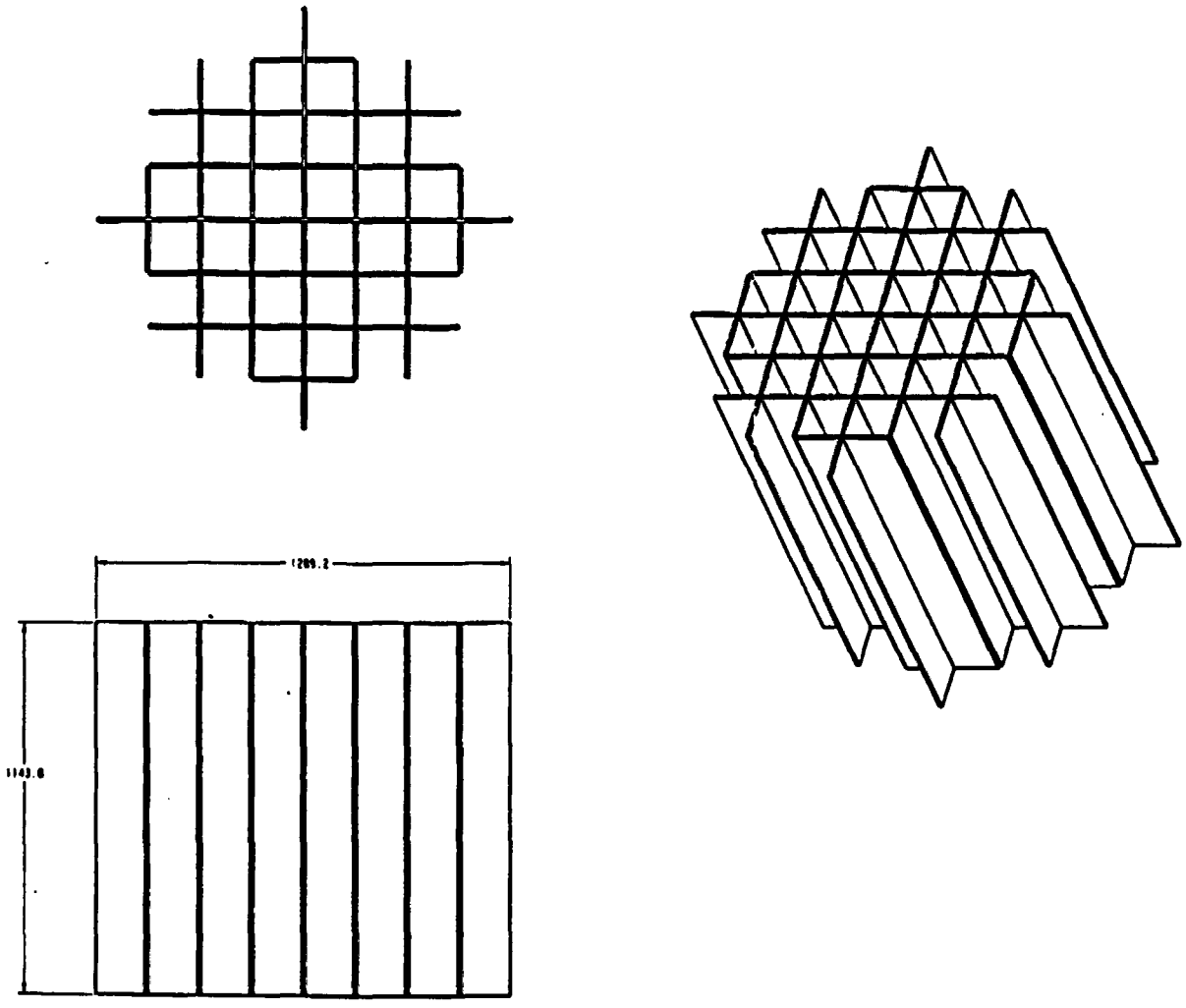

" FOR INFORMATION ONLY "

UNITS: mm

44-BWR UCF WASTE PACKAGE PLATE ASSEMBLY			
SKETCH NUMBER SK-0020 REV 00			
~~ORIGINATOR~~ sketched w/: GENE CONNELL			
DATE 03-06-97			
FILE /users/pro_library/checkout/44bwr_ucf/sk0020.dwg			

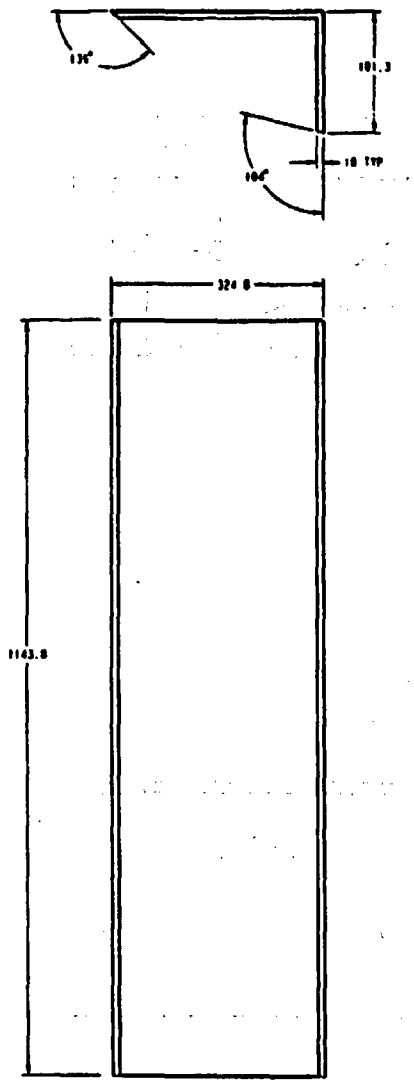

UNITS: mm

" FOR INFORMATION ONLY "

44-BWR UCF WASTE PACKAGE
CORNER GUIDE

SKETCH NUMBER: SK-0031 REV 00
Sketched by:
ORIGINATOR: GENE CONNELL 02/26/97 SAB 3/10/97 TWD 3-10-97
DATE: 03-06-97
FILE: /users/pro.1:brorg/checkout/40bor.ucf/sk0031.dwg

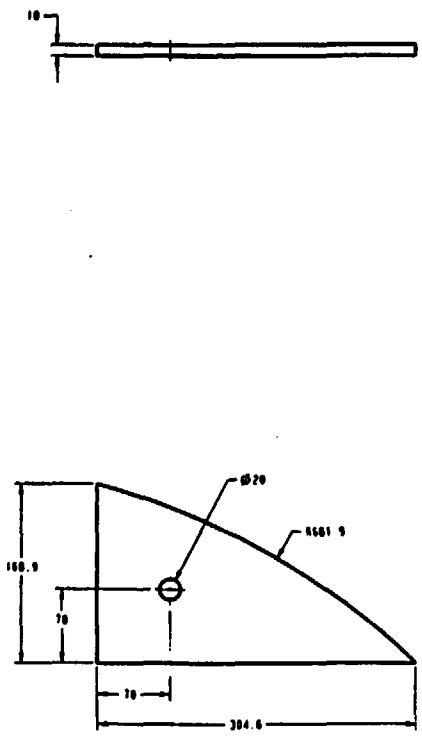

" FOR INFORMATION ONLY "

UNITS: mm

44-BWR UCF WASTE PACKAGE
STIFFENER

SKETCH NUMBER: SK-0030 REV 00
ORIGINATOR: GENE CONNELL
DATE: 03-06-97
FILE: /users/pro_library/checkout/44pwr_ucf/sk0030.dwg

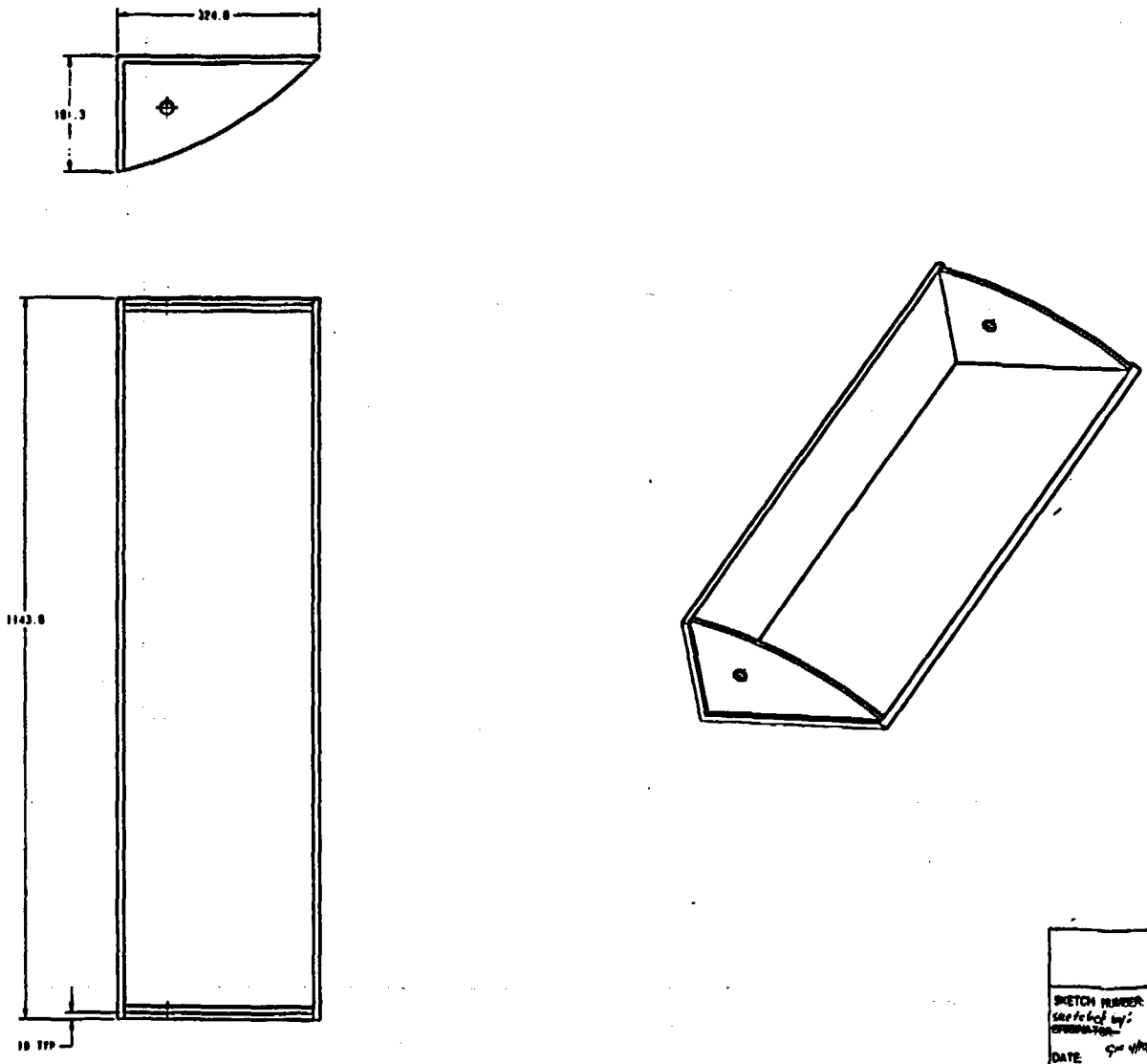

" FOR INFORMATION ONLY "

UNITS: mm

44-BWR UCF WASTE PACKAGE
CORNER GUIDE ASSEMBLY

SKETCH NUMBER: SK-0029 REV 00
Sketched by:
ORIGINATOR: GENE CONNELL
DATE: 03-06-97
FILE: /users/pro.library/checkout/44bwr.ucf/sk0029.dwg

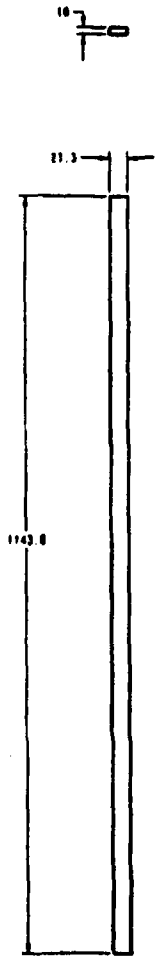

" FOR INFORMATION ONLY "

UNITS: mm

44-BWR UCF WASTE PACKAGE
B-GUIDE

SKETCH NUMBER SK-0828 REV 00
Sketched by:
ORIGINATOR: GENE CONNELL
DATE 03-06-97
FILE /users/pro_library/sketchcad/44bwr.ucf/sk0828.dwg

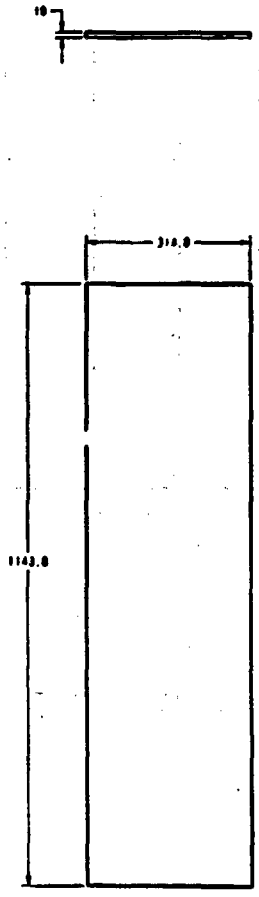

" FOR INFORMATION ONLY "

UNITS: mm

44-BWR UCF WASTE PACKAGE
A-GUIDE

SKETCH NUMBER: SK-0027 REV 00
Sketched by/ ORIGINATOR: GENE CORNELL
DATE: 03-06-97
FILE: /users/pro.library/checkout/ddbw_cnc/fs0027.dwg

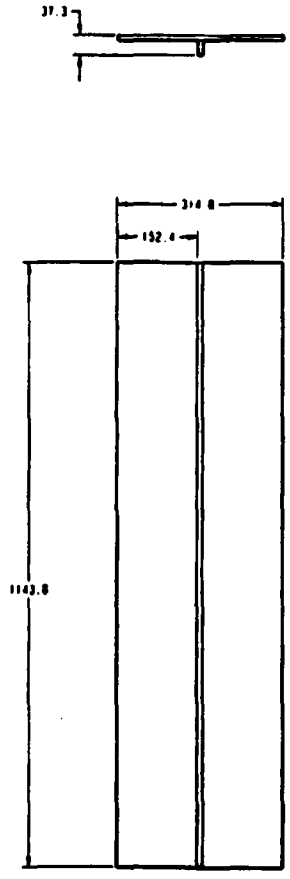

" FOR INFORMATION ONLY "

UNITS: mm

44-BWR UCF WASTE PACKAGE
SIDE GUIDE ASSEMBLY

SKETCH NUMBER: SA-0026 REV 00

ORIGINATOR: GENE CONNELL

DATE: 03-06-97

FILE: /users/pro_library/checkout/44bwr_ucf/sk0026.dwg

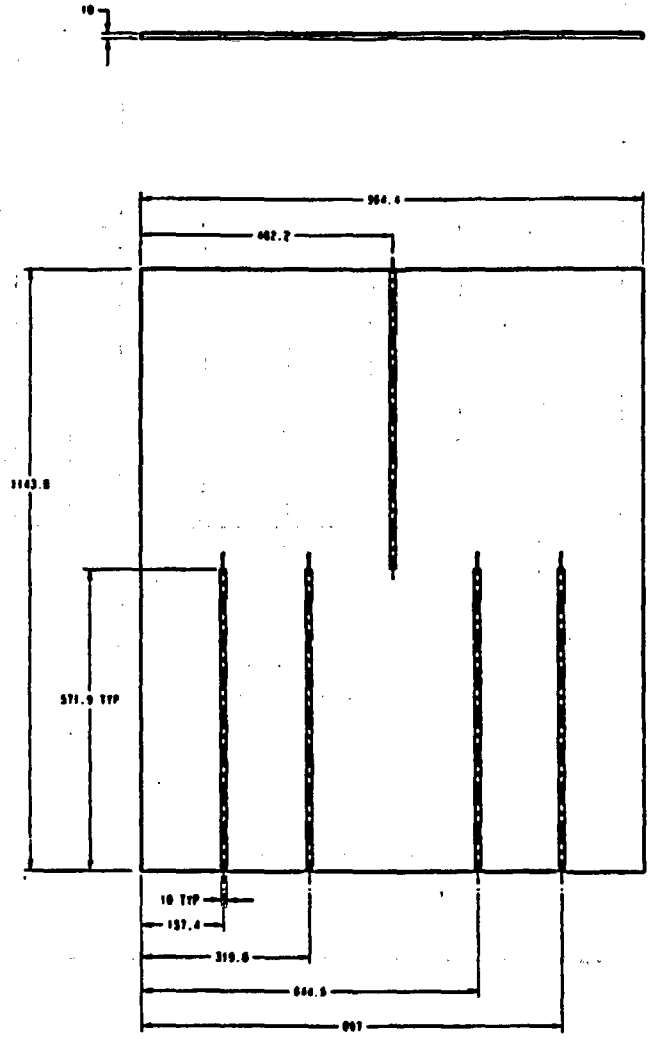

" FOR INFORMATION ONLY "

UNITS: mm

44-BWR UCF WASTE PACKAGE
E-PLATE

SKETCH NUMBER: SK-0025 REV 00
Sketched by / ORIGINATOR: GENE CONNELL
DATE: 03-06-97
FILE: /users/pro_library/checkout/44bwr.ucf/sk0025.dwg

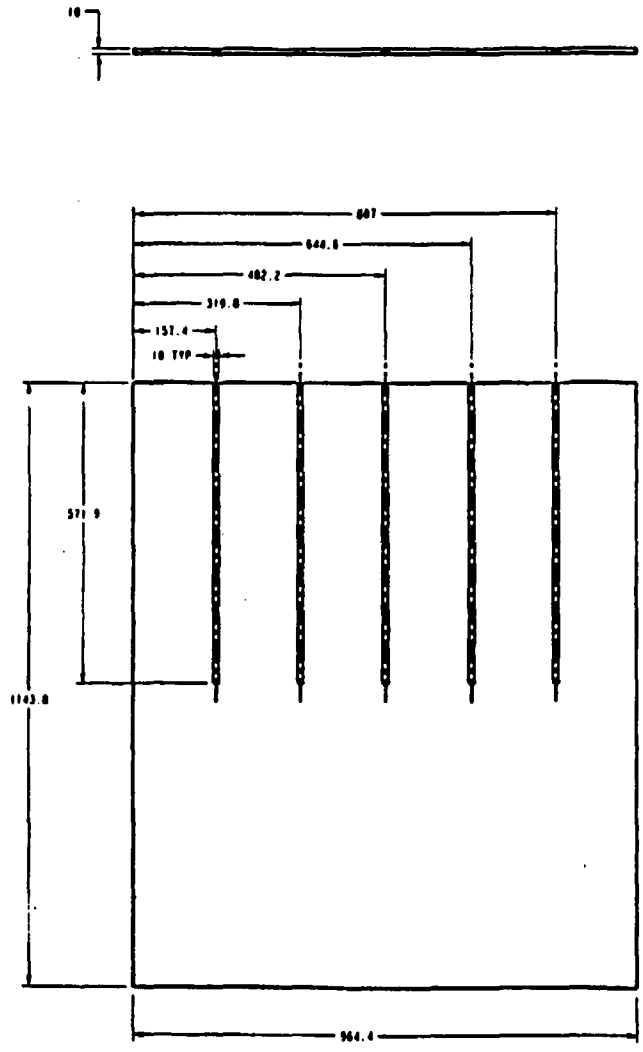

" FOR INFORMATION ONLY "

UNITS: mm

44-BWR UCF WASTE PACKAGE D-PLATE	
SKETCH NUMBER: SK-0024 REV 00	
Searched by: ORIGINATOR: GENE CONNELL	GFC 02/4/97 Sub 3/10/97 Tuda 3-10-97
DATE: 03-05-97	
FILE: /users/pro_library/checkout/44bwr.ucf/sk0024.dwg	

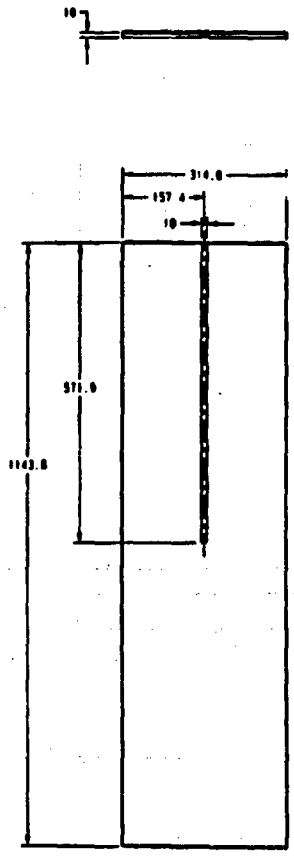

" FOR INFORMATION ONLY "

UNITS: mm

44-BWR UCF WASTE PACKAGE
C-PLATE

SKETCH NUMBER SK-0023 REV 00
ORIGINATOR GENE CONNELL
DATE 03-06-97
FILE /users/pro_library/checkout/44bwr_ucf/sk0023.dwg

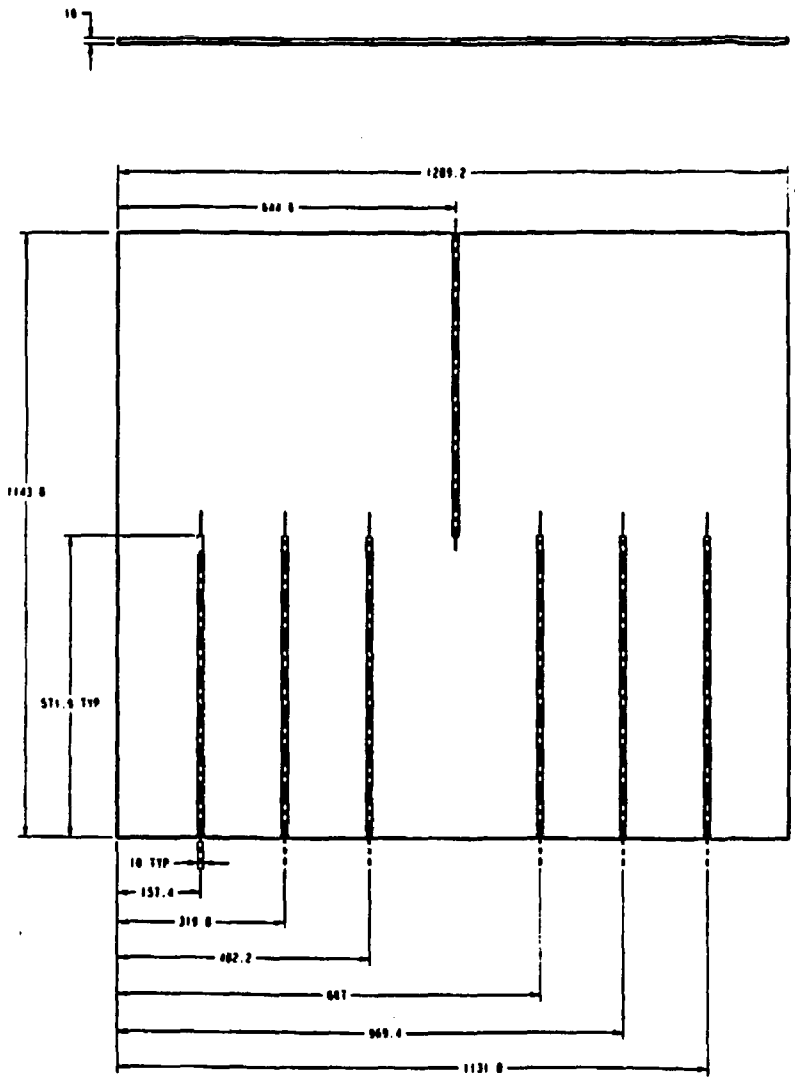

UNITS: mm

" FOR INFORMATION ONLY "

44-BWR UCF WASTE PACKAGE
B-PLATE

SKETCH NUMBER: SK-0022 REV 00
Sketched by:
ORIGINATOR: GENE CORNELL
DATE: 03-06-97
FILE: /users/pro.1/library/checkout/44bwr.aut/sk0022.dwg

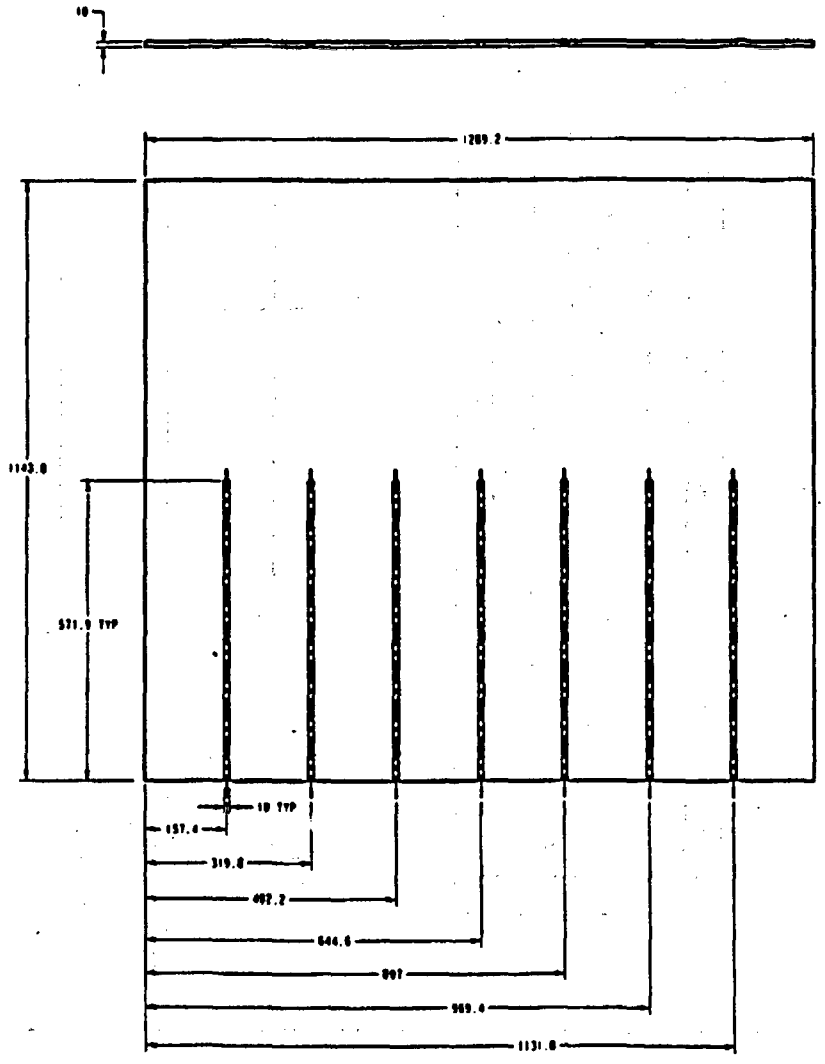

UNITS: mm

" FOR INFORMATION ONLY "

44-BWR UCF WASTE PACKAGE
A-PLATE

SKETCH NUMBER SK-0021 REV 00
Sketched by:
ORIGINATOR GENE CONNELL
DATE: 03-06-97
FILE: /users/pro.library/cbachmt/44bwr.out/sk0021.dwg

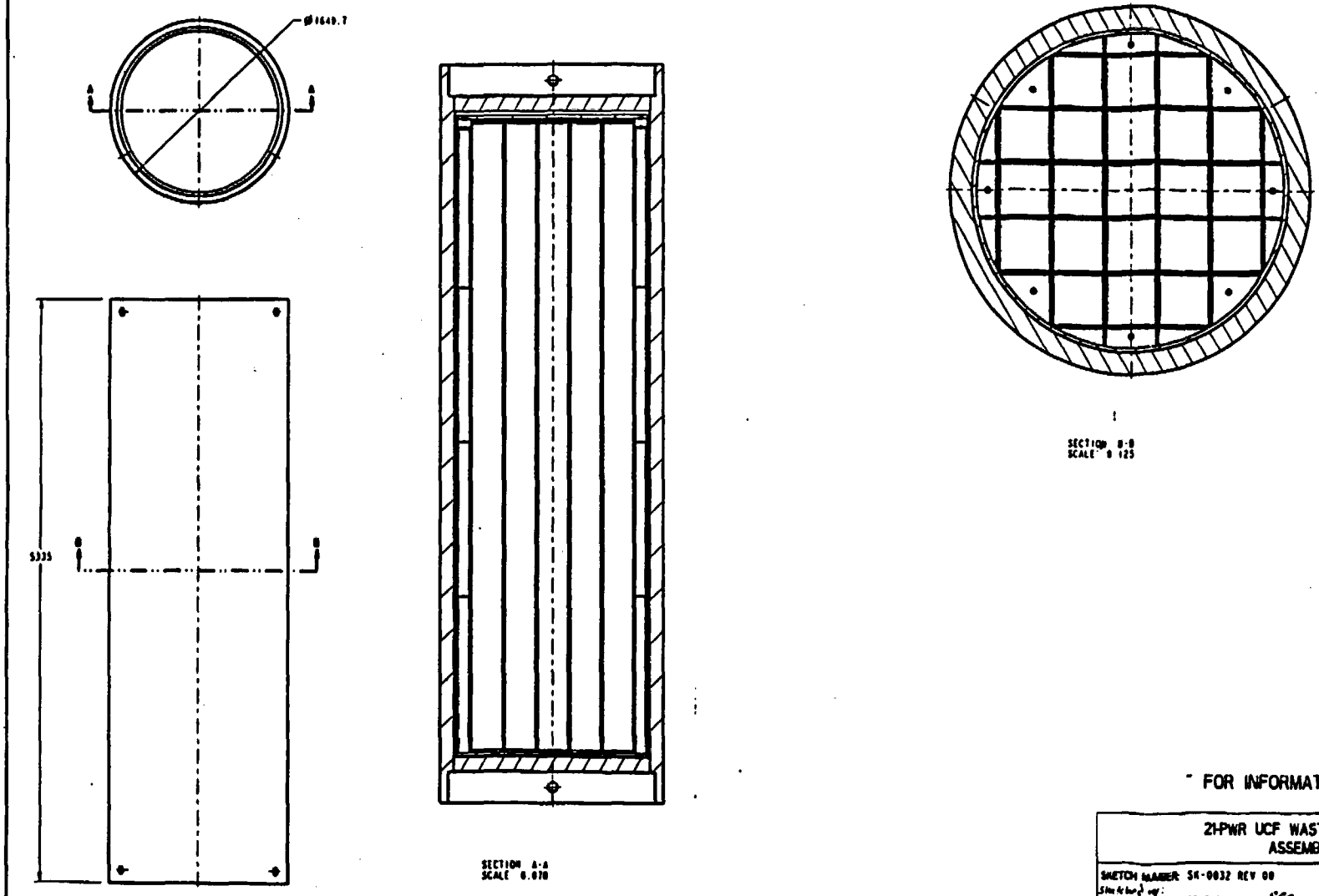

" FOR INFORMATION ONLY "

21-PWR UCF WASTE PACKAGE ASSEMBLY	
SKETCH NUMBER: SK-0032 REV 00	
Sketched by: GENE CONNELL	
ORIGINATOR:	
DATE: 03-06-97	
FILE: /users/pro_library/checkout/21pwr.ucf/sk0032.dwg	

UNITS: mm

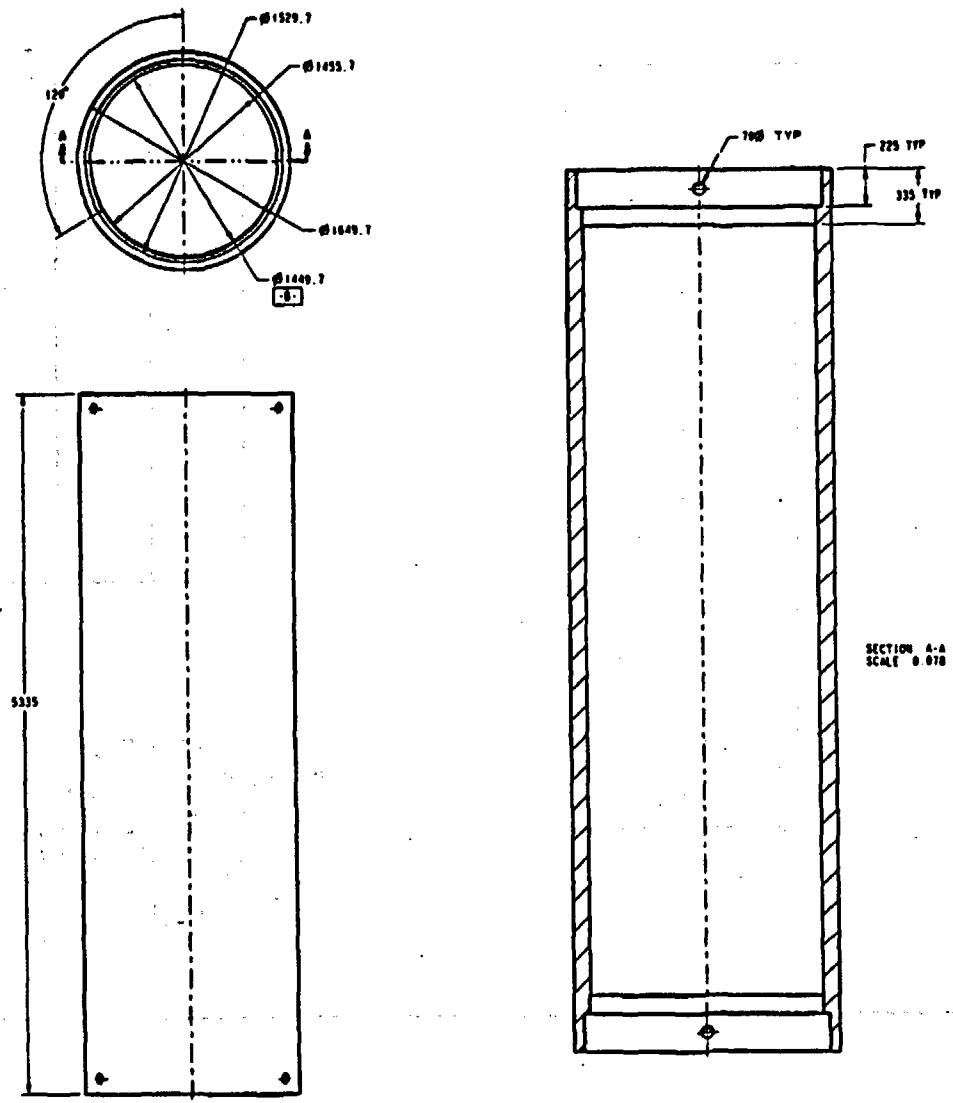

" FOR INFORMATION ONLY "

UNITS: mm

21-PWR UCF WASTE PACKAGE OUTER BARRIER	
SKETCH NUMBER	SK-0033 REV 00
ORIGINATOR	GENE CONNELL
DATE	03-06-97
FILE	/users/pro_library/checkout/21pwr_ucf/sk0033.dwg

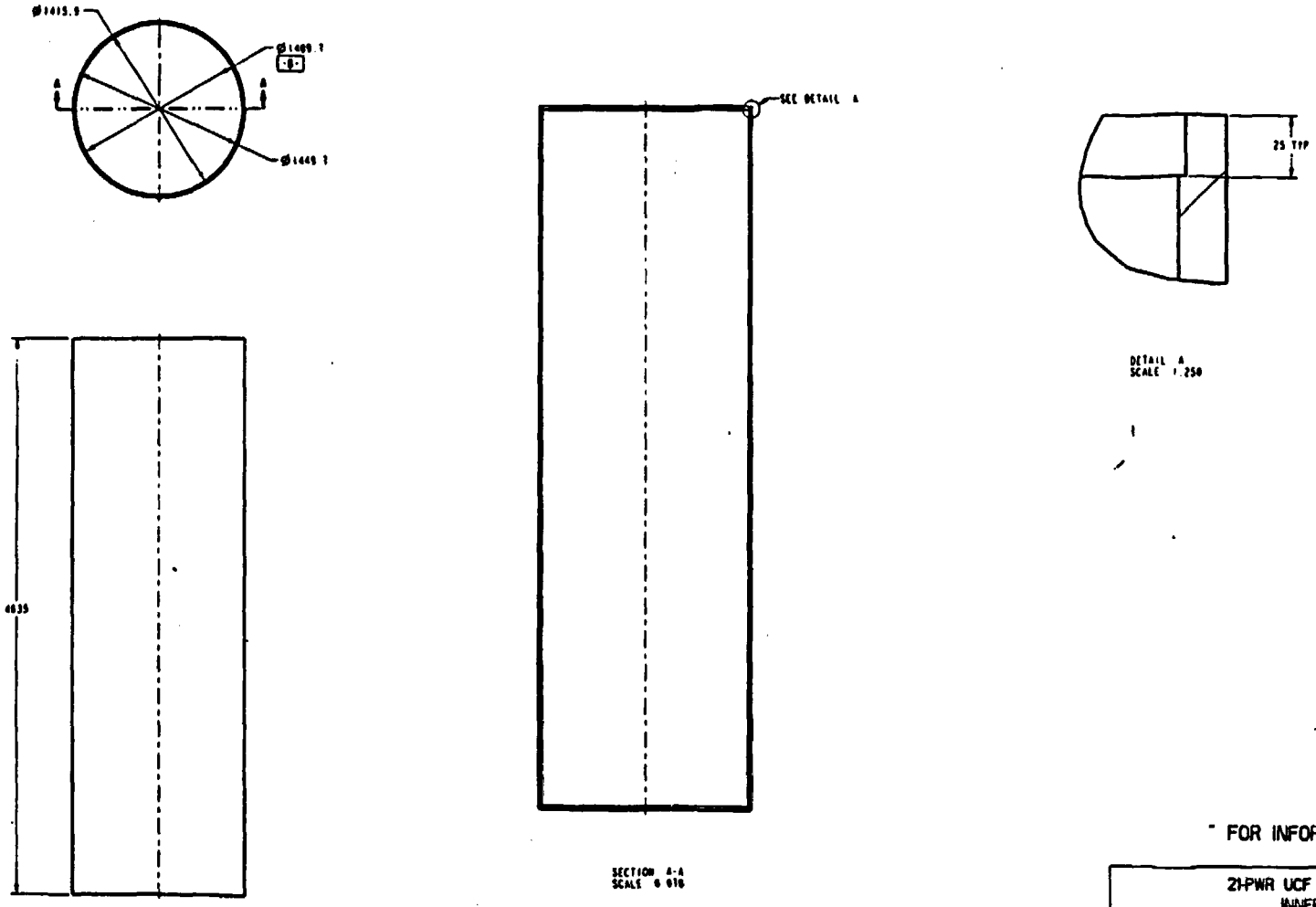

" FOR INFORMATION ONLY "

UNITS: mm

21-PWR UCF WASTE PACKAGE INNER BARRIER	
SKETCH NUMBER:	SK-0034 REV 00
sketched by: ORIGINATOR:	GENE CONNELL GC 3/10/97 smb 3/10/97 TMD 3-10-97
DATE:	03-06-97
FILE:	/users/pro.library/cbackout/21pwr_ucf/sk0034.dwg

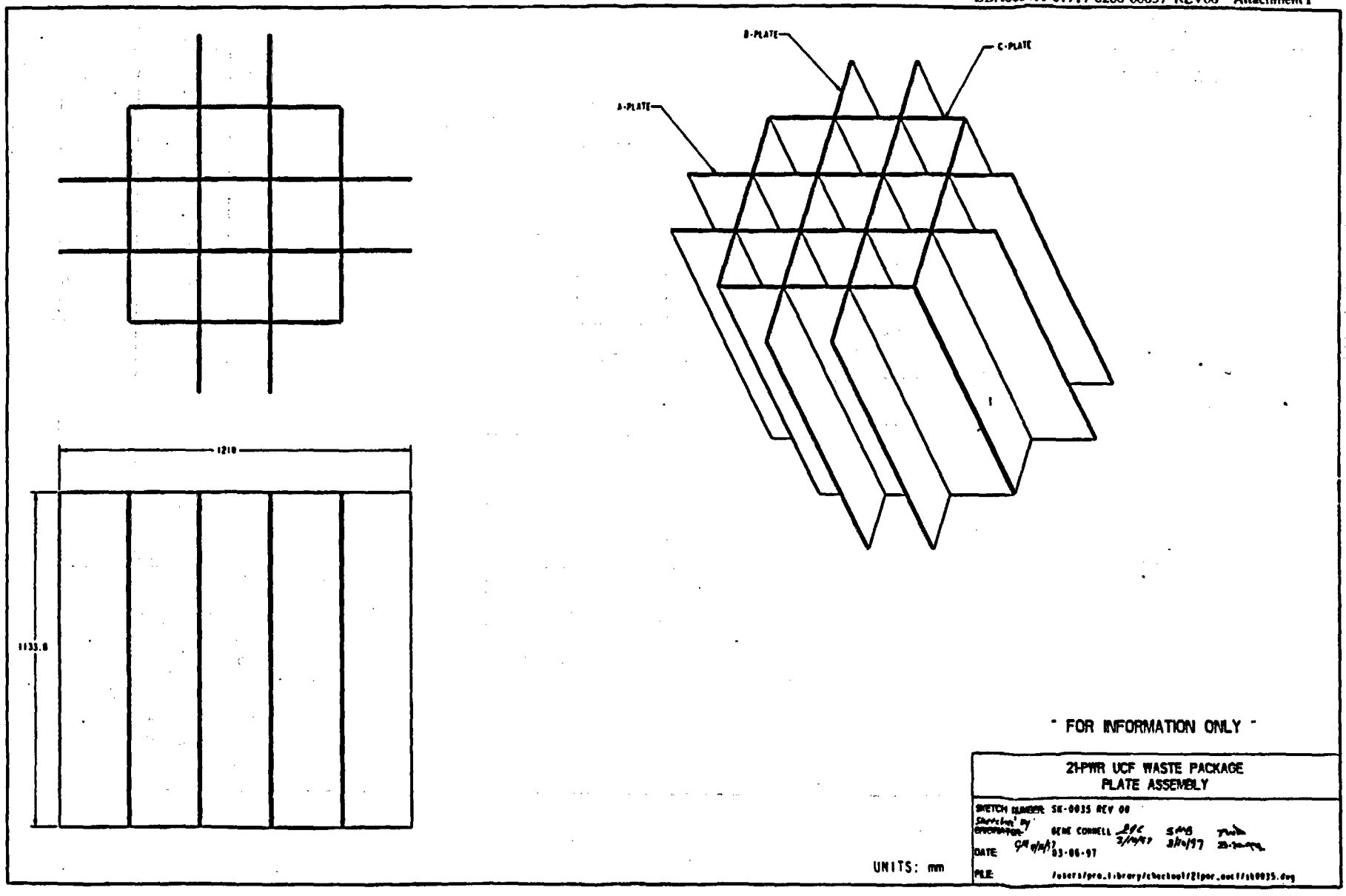
B-PLATE
C-PLATE
A-PLATE
1210
1133.6
" FOR INFORMATION ONLY "
UNITS: mm
21-PWR UCF WASTE PACKAGE
PLATE ASSEMBLY
SKETCH NUMBER SK-0035 REV 00
Sketched by
GENE CONNELL
DATE 03-06-97
FILE /users/pro_library/checkout/21pwr_ucf/sk00035.dwg

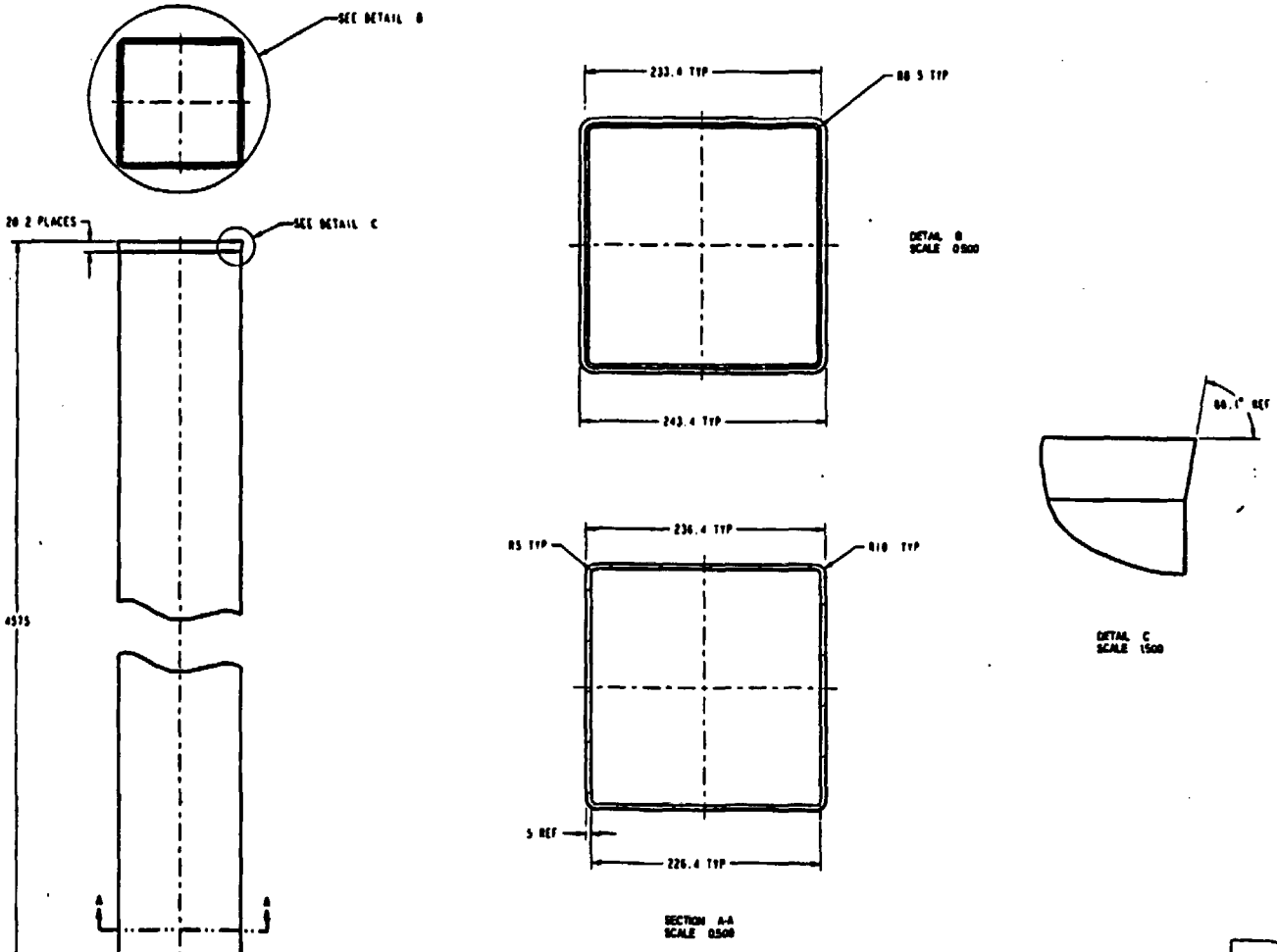

" FOR INFORMATION ONLY "

UNITS: mm

21-PWR UCF WASTE PACKAGE FUEL BASKET TUBE	
SKETCH NUMBER	SK-0046 REV 00
ORIGINATOR	GENE CORNELL
DATE	03-06-97
FILE	/users/pro.library/checkout/21pwr.ucf/sk0046.dwg

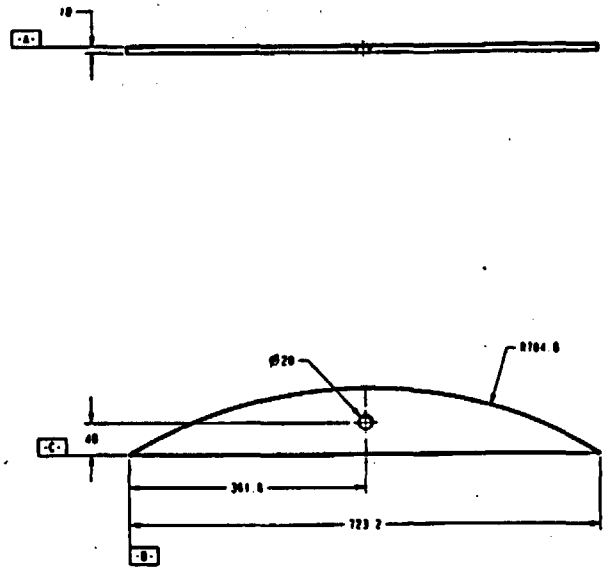

" FOR INFORMATION ONLY "

UNITS: mm

21-PWR UCF WASTE PACKAGE SIDE COVER	
SKETCH NUMBER	SK-0045 REV 00
Sketched by / ORIGINATOR	GENE CONNELL 2/6 2-10-97 SMB 3/10/97 TWB 3-10-97
DATE	03-06-97
FILE	/users/pro_library/cbschool/21pwr_ucf/sk0045.dwg

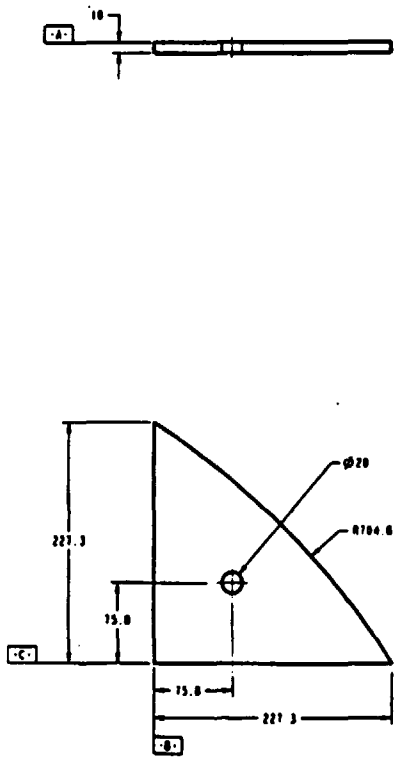

" FOR INFORMATION ONLY "

21-PWR UCF WASTE PACKAGE STIFFENER	
SKETCH NUMBER: SK-0044 REV 00	
Submitted by: ORIGINATOR: GERE CORNELL	
DATE: 03-06-97	
FILE: /users/pro_library/checkout/21pwr.ucf/sk0044.dwg	

UNITS: mm

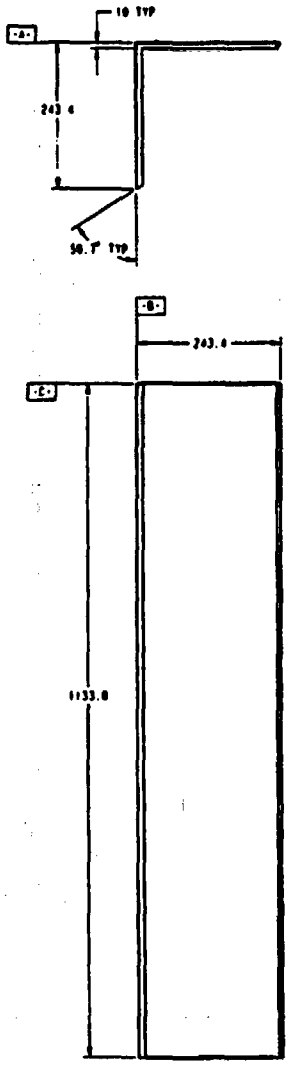

" FOR INFORMATION ONLY "

UNITS: mm

21-PWR UCF WASTE PACKAGE CORNER GUIDE			
SKETCH NUMBER: SK-0043 REV 00			
Sketched by: ORIGINATOR	GENE CONNELL	SMB	TWB
DATE	03-06-97		
FILE	/users/pro_library/checkout/21pwr.ucf/sk0043.dwg		

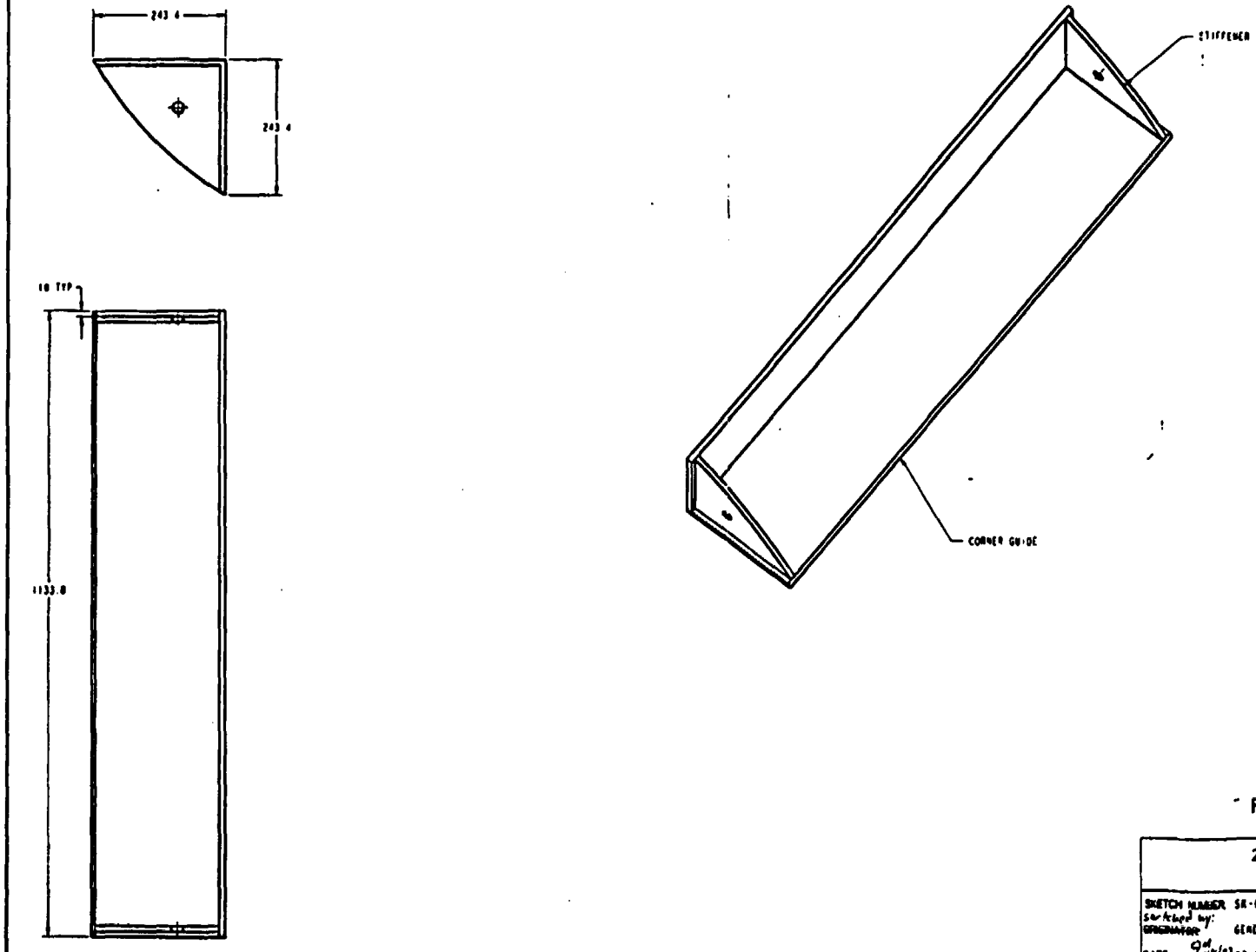

" FOR INFORMATION ONLY "

UNITS: mm

21-PWR UCF WASTE PACKAGE CORNER GUIDE ASSEMBLY	
SKETCH NUMBER	SK-0042 REV 00
ORIGINATOR	GENE CORNELL
DATE	03-06-97
FILE	/users/pro_library/checkout/21pwr_ucf/sk0042.dwg

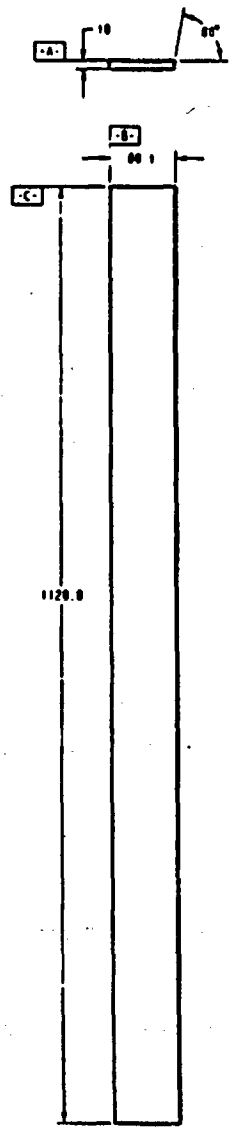

" FOR INFORMATION ONLY "

UNITS: mm

21-PWR UCF WASTE PACKAGE B-GUIDE	
SKETCH NUMBER	SK-0041 REV 00
ORIGINATOR	GENE CORNELL
DATE	03-06-97
FILE	/users/pro_library/checkout/21pwr_ucf/sk0041.dwg

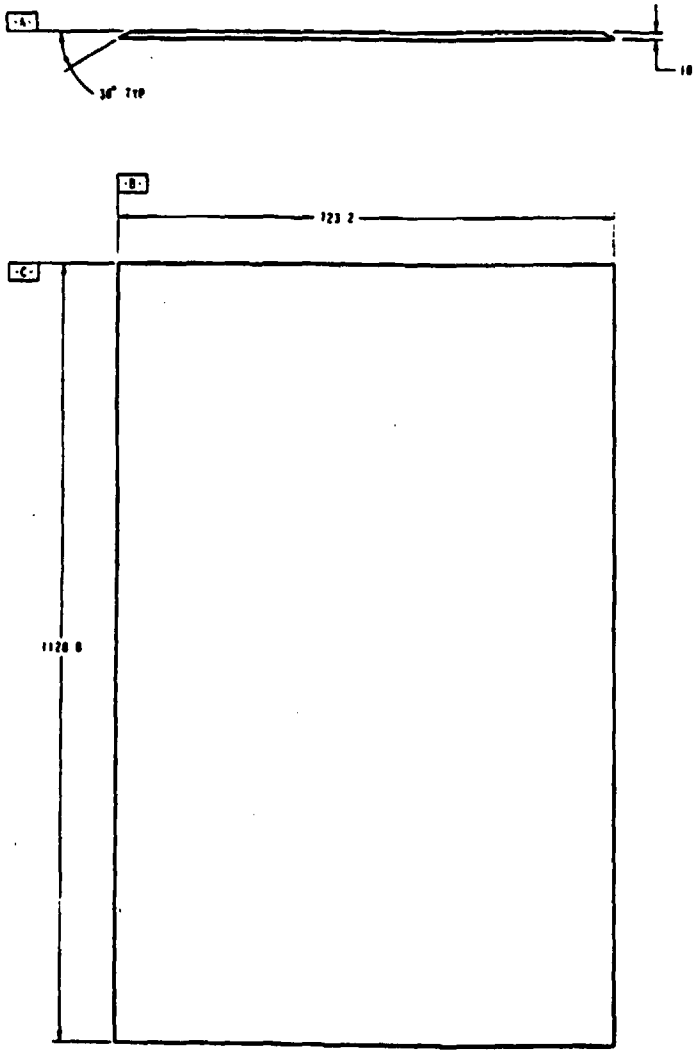

" FOR INFORMATION ONLY "

UNITS: mm

	21-PWR UCF WASTE PACKAGE A-GUIDE
SKETCH NUMBER:	SK-0040 REV 00
ORIGINATOR:	GENE CONNELL
DATE:	03-06-97
FILE:	/users/pro.library/checkout/21pwr.ucf/sk0040.dwg

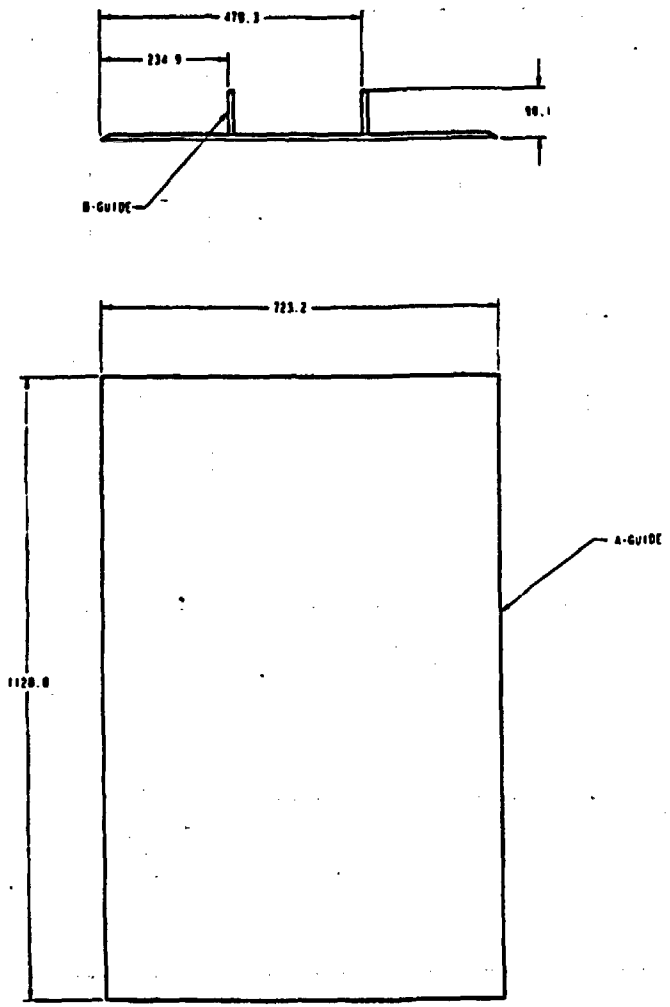

" FOR INFORMATION ONLY "

	21-PWR UCF WASTE PACKAGE SIDE GUIDE ASSEMBLY
SKETCH NUMBER	SK-0039 REV 00
SKETCH BY: ORIGINATOR	GENE CONNELL 3/10/97 SMB 3/10/97 TMB 3-10-97
DATE	03-08-97
FILE	/users/pro_library/checkout/21pwr_ucf/sk0039.dwg

UNITS: mm

3/10/97

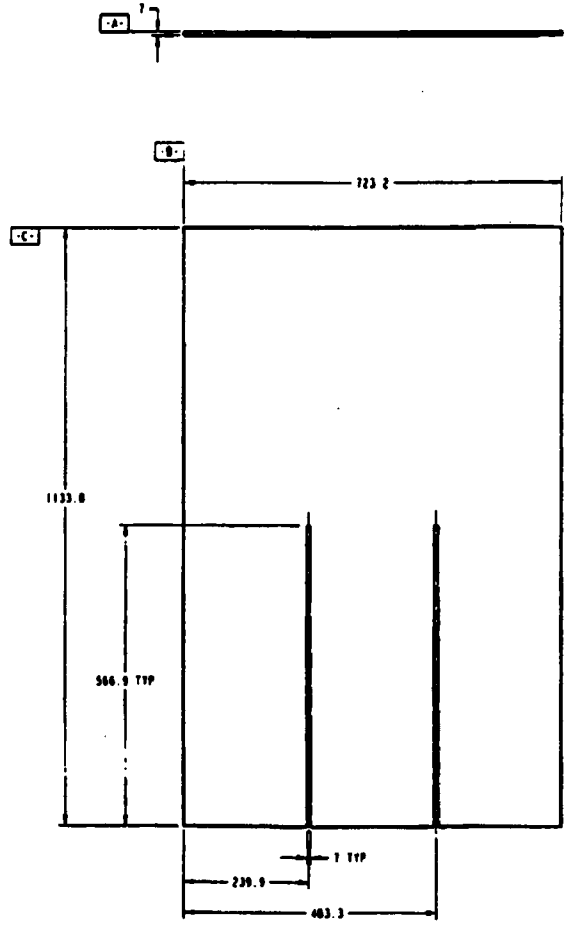

" FOR INFORMATION ONLY "

UNITS: mm

21-PWR UCF WASTE PACKAGE C-PLATE	
SKETCH NUMBER	SK-0038 REV 00
ORIGINATOR	GENE CONNELL
DATE	03-06-97
FILE	/users/pro.library/checkout/21pwr.ucf/sk0038.dwg

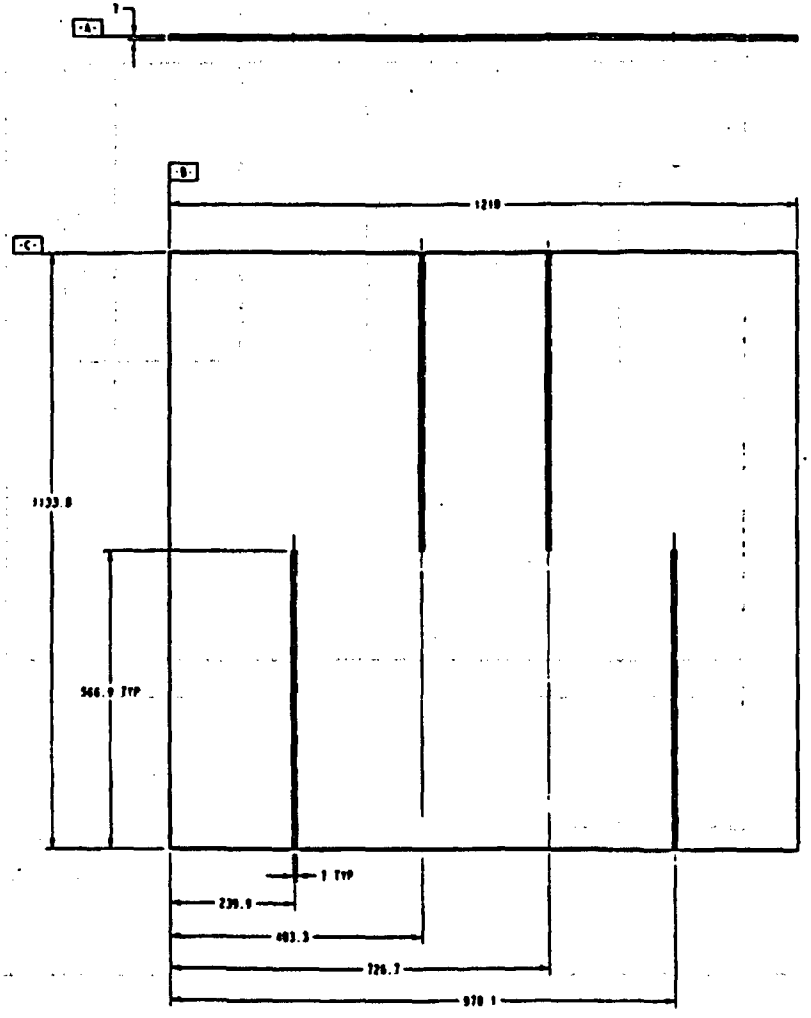

UNITS: mm

" FOR INFORMATION ONLY "

21-PWR UCF WASTE PACKAGE
B-PLATE

SKETCH NUMBER SK-0037
SKETCHED BY
ORIGINATOR GENE CORNELL
DATE 03-06-97
FILE /users/pro_library/checkout/21pwr_ucf/sk0037.dwg

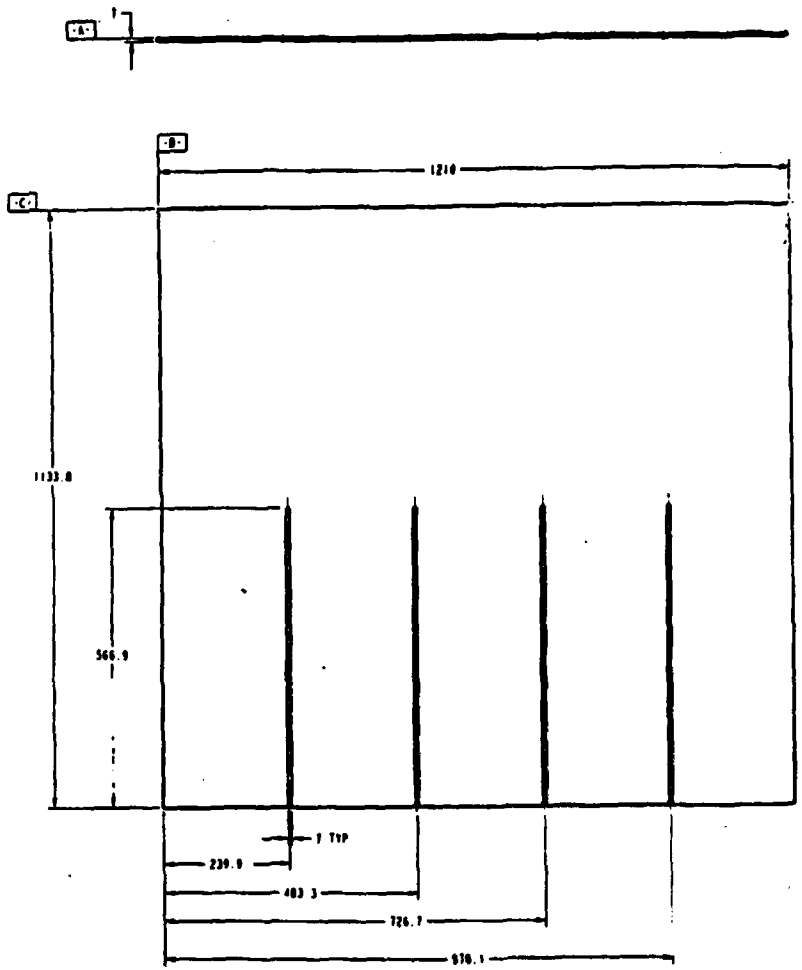

" FOR INFORMATION ONLY "

UNITS: mm

21-PWR UCF WASTE PACKAGE A-PLATE	
SKETCH NUMBER	SK-0036 REV 00
Sketched by: ORIGINATOR	GENE CONNELL GEC 3-10-97
	SMB 3/10/97
	TWD 3-10-97
DATE	9/1 9/10/97 03-06-97
FILE	/users/pro_library/checkout/21pwr.dwg/sk0036.dwg

Table 4 from page 5 of Reference 5.29

Plant	Core Size (Assys.)
Farley 1	157
Farley 2	157
Palo Verde 1	241
Palo Verde 2	241
Palo Verde 3	241
ArkansasNuclear 1	177
ArkansasNuclear 2	177
Calvert Cliffs 1	217
Calvert Cliffs 2	217
Pilgrim 1	580
Brunswic 1	560
Brunswic 2	560
Harris 1	157
Robinson 2	157
Perry 1	748
Braidwoo 1	193
Braidwoo 2	193
Byron 1	193
Byron 2	193
Dresden 2	724
Dresden 3	724
LaSalle County 1	764
LaSalle County 2	764
Quad Cities 1	724
Quad Cities 2	724
Zion 1	193
Zion 2	193
Indian Point 2	193
Big Rock	84
PalisadeMI	204
Enrico Fermi 2	764
Catawba 1	193
Catawba 2	193
McGuire 1	193
McGuire 2	193
Oconee 1	177
Oconee 2	177
Oconee 3	177
Beaver Valley 1	157

Note

Plants shutdown before 1991 or which did not start operations until after 1991 excluded from list.

Total Assemblies Incore (Sum of all core sizes)	37432
Total Assemblies Discharged Through 1991 (From Ref. 5.29, Table 5, page 21	82382
Total Assemblies	119814

Fuel Loading Practices as of 1996 (Ref. 5.28)

	# Plants	% Plants
Shuffle	29	26%
Full Core	81	74%
Total	110	

No. of Handling Steps

Unirradiated	5
Irradiated, Full Core	10
Irradiated, Shuffle	4

Minimum No. of Irradiated Handlings Thru 1991

	Full Core	Shuffle
Discharged	606631	86876
Incore	137818	19737

Total Irradiated Handlings	851061
Total Unirradiated Handlings	599070
Total Handlings	1450131
Drop Rate/Handling	1.7929E-05

Table 4 from page 5 of Reference 5.29

Plant	Core Size (Assys.)
Beaver Valley 2	157
Crystal River 3	177
St. Lucie 1	217
St. Lucie 2	217
Turkey Point 3	157
Turkey Point 4	157
Hatch 1	560
Hatch 2	560
Vogtle 1	193
Vogtle 2	193
Three Mile Island	177
Oyster Creek	560
River Bend 1	624
South Texas 1	193
South Texas 2	193
Duane Arnold	368
Clinton 1	624
Cook 1	193
Cook 2	193
Wolf Creek 1	193
Waterfor 3	217
Maine Yankee	217
Cooper Station	548
FitzPatrNY	560
Indian Point 3	193
Nine Mile Point	532
Nine Mile Point	764
Seabrook	193
Millston 1	580
Millston 2	217
Millston 3	193
Haddam Neck	157
MonticelMN	484
Prairie Island 1	121
Prairie Island 2	121
Fort Calhoun	133
Diablo Canyon 1	193
Diablo Canyon 2	193
Limerick 1	764

Table 4 from page 5 of Reference 5.29

Plant	Core Size (Assys.)
Limerick 2	764
Peach Bottom 2	764
Peach Bottom 3	764
Susqueha 1	764
Susqueha 2	764
Trojan OR	193
Hope Creek	764
Salem 1	193
Salem 2	193
Ginna NY	121
Summer SC	157
San Onofre 1	157
San Onofre 2	217
San Onofre 3	217
Grand Gulf 1	800
Browns Ferry 1	764
Browns Ferry 2	764
Browns Ferry 3	764
Sequoyah 1	193
Sequoyah 2	193
Davis- Besse	177
ComanchePeak 1	193
CallawayMO	193
Vermont Yankee	368
North Anna 1	157
North Anna 2	157
Surry 1	157
Surry 2	157
WashingtNuclear 2	764
Point Beach 1	121
Point Beach 2	121
KewauneeWI	121
Yankee Rowe	76

Fuel Assembly Drop Events at Commercial Reactors

Plant/ Reactor	Number of Events																						Reference Document	Notes
	70	71	72	73	74	75	76	77	78	79	80	81	82	83	84	85	86	87	88	89	90	91		
Yankee 1			1																				LER A	u
Zion 2				1																			LER C	u
Pilgrim 1					1					1													LER D, Ref. 5.15, Vol. 6	1 i, 1 u
Millstone 1					1							1											LER E, Ref. 5.15, Vol. 6	2 i
Humboldt Bay 1						1																	LER F	i
Crystal River 3						1																	LER G & Ref. 5.15, V6	u
Dresden 1									1														LER H & Ref. 5.15, V6	i
Turkey Point 4				1										2									LER B, I & Ref. 5.15, V6	1 u, 2 i
Big Rock Point 1																						1	LER J	i
Quad Cities 1																				1			LER K & Ref. 5.15, Vol.7	u
Duane Arnold 1						1																	LER L	i
Indian Point 2	1																						LER M	i
Brunswick 1																						1	Ref. 5.15, Vol. 9, p. 5.5	u?
Grand Gulf 1																					1		Ref. 5.15, Vol. 8, p. 5.3	u
Vogtle 1																			1				Ref. 5.15, Vol. 6, p. 5.5	i
Diable Canyon 1																	1						Ref. 5.15, Vol. 6, p. 5.5	i
Haddam Neck																	1						Ref. 5.15, Vol. 6, p. 5.5	i
Beaver Valley 1														1									Ref. 5.15, Vol. 6, p. 5.5	i
Cook 1												1											5.15, Vol. 6, p. 5.5	i
Limerick 2																				1			Ref. 5.15, Vol. 7, 5.18	i
Prairie Island 1												1											5.15, Vol. 6, p. 5.5	i
Sequoyah																				1			5.15, Vol. 7, p. 5.18	i
TOTAL	1	0	1	2	2	3	0	0	1	1	0	3	0	3	0	0	2	0	1	3	1	2		

Notes:
u = Unirradiated i = Irradiated

Total Drops	26
Total Irradiated	18
Total Unirradiated	8

LER References:

A	LER# 029-72000-00
B	LER# 251-73000-00
C	LER# 304-73000-00
D	LER# 293-74000-00
E	LER# 245-74000-00
F	LER# 133-75000-00
G	LER# 302-75000-00
H	LER# 010-78034-00
I	LER# 251-83002-01
J	LER# 155-91012-00
K	LER# 254-89016-00
L	LER# 331-75000-00
M	LER# 003-70000-00

Fuel Assembly Drop Events at Commercial Reactors

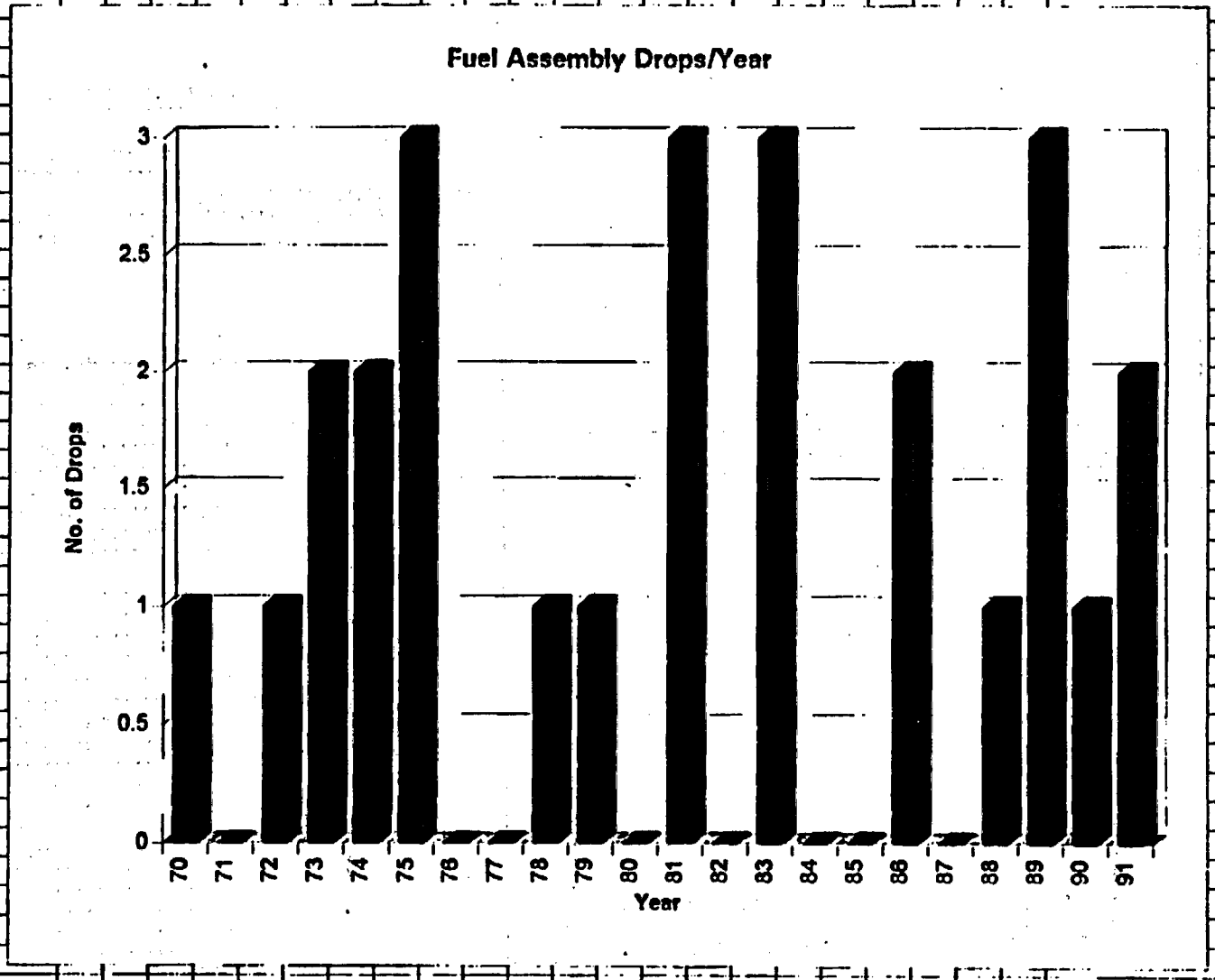

029-72000-00 YANKEE 1 Event Date 10/20/1972

LER Data

Reactor Type..... PWR
Reactor MFR..... WEC
System..... RC
Cause..... X
Sub-Cause..... *
Component..... FUEL
Sub-Component..... Z
Valve Sub-Code..... Z
Component Supplier..... *
NPRDS?.....
Component Manufacturer... *
Facility Status..... H
Power Level..... 0
Other Status..... N/A
Action Taken..... *
Future Action..... *
Effect on Plant..... *
Shutdown Method..... Z
Outage Hours..... 0
Discovery Method..... A
Discovery Description.... N/A
Occurrence Type..... 03
Activity Form..... Z
Activity Content..... Z
Activity Amount..... N/A
Release Location..... N/A
Number of Exposures..... 0
Exposure Type.....
Exposure Description..... ?N/A

Number of Injuries..... 0
Injury Description..... N/A??????????????????????????????
????????????????????????????????
Damage Type.....
Damage Description..... N/A

Revision..... 0
Report Date..... 11/20/1972

Event Description

WHILE INSERTING FUEL ASSEMBLY A 421 INTO CORE IT BECAME DISLODGED FROM THE UPPER CORE SUPPORT PLATE AND FELL A FEW INCHES. UPPER NOZZLE AND UPPER ASSEMBLY WERE DAMAGED.

Cause Description

FOREIGN OBJECT INTERFERED WITH GRAPPLE

Film Number 002083

LER Data	
Reactor Type.....	PWR
Reactor MFR.....	WEC
System.....	RC
Cause.....	E
Sub-Cause.....	*
Component.....	FUEL
Sub-Component.....	Z
Valve Sub-Code.....	Z
Component Supplier.....	*
NPRDS7.....	
Component Manufacturer...	*
Facility Status.....	H
Power Level.....	0
Other Status.....	N/A
Action Taken.....	*
Future Action.....	*
Effect on Plant.....	*
Shutdown Method.....	Z
Outage Hours.....	0
Discovery Method.....	A
Discovery Description....	N/A
Occurrence Type.....	02
Activity Form.....	Z
Activity Content.....	Z
Activity Amount.....	N/A
Release Location.....	N/A
Number of Exposures.....	0
Exposure Type.....	
Exposure Description.....	7N/A
Number of Injuries.....	0
Injury Description.....	N/A???
Damage Type.....	
Damage Description.....	N/A
Revision.....	0
Report Date.....	04/20/1973

Film Number 001180

Event Description

FUEL ASSEMBLY L-24 WAS DROPPED ABOUT 5 INCHES WHILE IN THE REACTOR SIDE LIFTING FRAME ASSEMBLY (RSLFA). THE RSLFA WAS BEING RAISED FROM HORIZONTAL TO VERTICAL POSITION WHEN CABLE SLIPPED THROUGH CABLE CLAMPS WHICH SECURED RSLFA.

Cause Description

CABLE SLIPPAGE WAS CAUSED BY CABLE CLAMP NOT GRIPPING CABLE.

LER Data

Reactor Type..... PWR
Reactor MFR..... GE
System..... FD
Cause..... A
Sub-Cause..... *
Component..... MECFUN
Sub-Component..... Z
Valve Sub-Code..... Z
Component Supplier..... *
NPRDS?.....
Component Manufacturer... Z999
Facility Status..... Z
Power Level..... 0
Other Status..... NA
Action Taken..... *
Future Action..... *
Effect on Plant..... *
Shutdown Method..... Z
Outage Hours..... 0
Discovery Method..... A
Discovery Description.... NA
Occurrence Type..... 01
Activity Form..... Z
Activity Content..... Z
Activity Amount..... NA
Release Location..... NA
Number of Exposures..... 0
Exposure Type..... Z
Exposure Description..... ?NA

Number of Injuries..... 0
Injury Description..... NAA??????????????????????????????
????????????????????????????????
Damage Type..... Z
Damage Description..... NA

Revision..... 0
Report Date..... 06/11/1975

Film Number 012872

Event Description

DURING TRANSFER OF AN IRRADIATED FUEL ASSEMBLY FROM THE TRANSFER BASKET POSITION IN THE SPENT FUEL POOL TO A POOL STORAGE LOCATION, THE FUEL ASSEMBLY BECAME DISENGAGED FROM THE FUEL GRAPPLE, AND FELL APPROXIMATELY SIX FEET AND STRUCK THE SPENT FUEL POOL FLOOR.

Cause Description

FUEL ASSEMBLY HAD NOT BEEN GRAPPLED PROPERLY OR CHECKED PRIOR TO MOVEMENT.

LER Data

Reactor Type..... PWR
Reactor MFR..... BW
System..... FD
Cause..... E
Sub-Cause..... *
Component..... FUEL.
Sub-Component..... Z
Valve Sub-Code..... Z
Component Supplier..... Z
NPRDS?.....
Component Manufacturer... Z999
Facility Status..... A
Power Level..... 0
Other Status..... NA
Action Taken..... *
Future Action..... *
Effect on Plant..... *
Shutdown Method..... Z
Outage Hours..... 0
Discovery Method..... A
Discovery Description.... NA
Occurrence Type..... 02
Activity Form..... Z
Activity Content..... Z
Activity Amount..... NA
Release Location..... NA
Number of Exposures..... 0
Exposure Type..... Z
Exposure Description..... ?NA

Number of Injuries..... 0
Injury Description..... NAA??????????????????????????????
????????????????????????????????
Damage Type..... D
Damage Description..... FUEL HANDLING TOOL AND FUEL ASSEMBLY DAMAGED
Revision..... 0
Report Date..... 11/20/1975

Film Number 013783

Event Description

(75-1) A FUEL ASSEMBLY FELL WHILE IN TRANSIT FROM THE SHIPPING CONTAINER TO THE INSPECTION LOCATION. THE BOTTOM OF THE ASSEMBLY WAS APPROXIMATELY FIVE FEET FROM THE FLOOR. THE FUEL ASSEMBLY WILL BE RETURNED FOR REPAIR OR REPLACEMENT. NO RADIOACTIVE MATERIAL WAS RELEASED. CORRECTIVE ACTION INVOLVED POSSIBLE ELIMINATION OF ALL SWAGED CONNECTIONS.

Cause Description

SLING WIRE PULLED OUT OF SWAGED FITTING, WHILE TRANSFERRING THE FIFTY-FIFTH FUEL ASSEMBLY BY THE FUEL HANDLING TOOL. THE SLING WAS CERTIFIED FOR 2400 LBS. THE ASSEMBLY WEIGHED 1550 LBS.

010-78034-00 DRESDEN 1 Event Date 12/01/1978

LER Data

Reactor Type..... BWR
Reactor MFR..... BW
System..... FD
Cause..... A
Sub-Cause..... B
Component..... FUEL
Sub-Component..... Z
Valve Sub-Code..... Z
Component Supplier..... N
NPRDS?..... N
Component Manufacturer... U090
Facility Status..... N
Power Level..... 0
Other Status..... NA
Action Taken..... N
Future Action..... G
Effect on Plant..... Z
Shutdown Method..... Z
Outage Hours..... 0
Discovery Method..... A
Discovery Description.... OPERATOR OBSERVATION
Occurrence Type..... 03
Activity Form..... Z
Activity Content..... Z
Activity Amount..... NA
Release Location..... NA
Number of Exposures..... 0
Exposure Type..... Z
Exposure Description..... ?NA

Number of Injuries..... 0
Injury Description..... NAA??????????????????????????????
????????????????????????????????
Damage Type..... Z
Damage Description..... NA

Revision..... 0
Report Date..... 12/08/1978

Film Number 022975

Event Description

DURING REACTOR FUEL UNLOADING A CHANNELED FUEL ASSEMBLY DROPPED FROM THE GRAPPLE WHILE BEING TRANSFERRED TO THE SPENT FUEL POOL IN THE FUEL HANDLING BUILDING. NO GASEOUS RELEASE WAS NOTICED AND THERE WAS NO APPARENT DAMAGE TO THE FUEL. THE HEALTH AND SAFETY OF THE PUBLIC WAS NOT AFFECTED.

Cause Description

THE FUEL ASSEMBLY WAS APPARENTLY NOT PROPERLY LATCHED TO THE GRAPPLE. THE GRAPPLE WAS INSPECTED AND A DUMMY ASSEMBLY TRANSFERRED SATISFACTORILY.AN OBSERVER WITH BINOCULARS WILL NOW VERIFY LATCHING IN THE FUEL HANDLING BUILDING.

LER Data

Reactor Type..... PWR
Reactor MFR..... WEC
System..... FD
Cause..... E
Sub-Cause..... B
Component..... INSTRU
Sub-Component..... S
Valve Sub-Code..... Z
Component Supplier..... Z
NPRDS?..... N
Component Manufacturer... P006
Facility Status..... G
Power Level..... 0
Other Status..... NA
Action Taken..... X
Future Action..... Z
Effect on Plant..... Z
Shutdown Method..... Z
Outage Hours..... 0
Discovery Method..... A
Discovery Description.... OPERATOR OBSERVATION
Occurrence Type..... 01
Activity Form..... Z
Activity Content..... Z
Activity Amount..... NA
Release Location..... NA
Number of Exposures..... 0
Exposure Type..... Z
Exposure Description..... ?NA

Number of Injuries..... 0
Injury Description..... NAA??????????????????????????????
????????????????????????????????
Damage Type..... Z
Damage Description..... NA

Revision..... 1
Report Date..... 12/22/1983

Event Description

WHILE LIFTING SPENT FUEL ASSEMBLY X-13 OUT OF DESIGNATED RACK IN THE UNIT 4 SPENT FUEL POOL , THE HOISTING CABLE ON THE FUEL HANDLING CRANE PARTED AND ASSEMBLY X-13 DROPPED BACK INTO ITS RACK FROM THE FULLY LIFTED POSITION . THIS IS REPORTABLE IN ACCORDANCE WITH T.S.6.9.2.A.2. THERE IS NO INDICATION OF FUEL CLADDING DAMAGE , AS RADIATION MONITOR READINGS AND SURVEY RESULTS ARE UNCHANGED FROM PRE-EVENT VALUES . THE PUBLIC'S HEALTH AND SAFETY WERE NOT AFFECTED . SIMILAR LERS WERE 251-73-2 AND 251-75-7 .

Cause Description

A MALFUNCTION OF THE TWO LIMIT SWITCHES ON THE HOISTING CRANE FAILED TO STOP THE UPWARD MOVEMENT OF THE FUEL ASSEMBLY . THIS CAUSED THE CABLE TO BE OVERSTRESSED . SUBSEQUENTLY , THE CABLE PARTED . REPAIRS HAVE BEEN MADE TO THE LIMIT SWITCHES ADDITIONAL INSPECTIONS OF X-13 WERE CONDUCTED IN THE SPENT FUEL POOL . NO SIGNS OF CLADDING DAMAGE TO THE ASSEMBLY WERE REVEALED .

Film Number 0000663D04-0,0001034C04-1

LER Data

Reactor Type..... BWR
Reactor MFR..... GE
Operating Mode..... N
Power Level..... 085
Applicable Law(s)..... 4.3
Contact Name..... BOURASSA MD
Contact Phone..... 616-547-6537
Revision..... 0
Pages..... 4
Report Date..... 03/05/1992
Supplimental Report Date.
Other Dockets..... 455

LERTS Data

SOER.....
SEN.....
SER.....
Other Reference..... IS 1086,RSEN 92-0201??????????

Title

SPENT FUEL BUNDLE DROP IN THE BIG ROCK SPENT FUEL POOL

Abstract

ON OCTOBER 22 , 1991 @ APPROXIMATELY 1830 , SPENT FUEL BUNDLE 1118 WAS BEING SHUFFLED IN THE SPENT FUEL POOL FROM FUEL STORAGE RACK LOCATION G-A6 TO G-16 . IN THE PROCESS OF LOWERING THE BUNDLE INTO THE FUEL CELL , IT DE-GRAPPLED FROM THE FUEL HANDLING EQUIPMENT AND FELL OVER , SETTLING IN A HORIZONTAL POSITION ON THE TOP OF THE G FUEL RACK . NO OTHER FUEL BUNDLES WERE INVOLVED . THE OPERATION OF THE PLANT WAS NOT AFFECTED . THE OPERATORS COULD NOT DETECT ANY SIGNS OF PHYSICAL DAMAGE TO THE BUNDLE OR RACK . RADIATION LEVELS IN THE AREA OF THE SPENT FUEL POOL DID NOT CHANGE . THE FUEL BUNDLE WAS RETRIEVED AND PLACED IN POSITION G-16 IN THE FUEL RACK . NO FURTHER SPENT FUEL MOVES WERE MADE . THE FOLLOWING REASONS WERE IDENTIFIED AS ACTING TOGETHER TO CAUSE THE DEGRAPPLING : A . A BENT GRAPPLE HOOK . B . THE ASSEMBLY WAS LEANING WHEN IT CONTACTED THE FUEL RACK , CAUSING SLACK IN THE FUEL HANDLING CABLE . C . THE BAIL WAS ABOVE THE HOOKS . D . THE SPRING FORCE OF THE NEW GRAPPLE WAS WEAKER THAN THE ORIGINAL GRAPPLE . E . THE EXPERIENCE LEVEL OF THE AUXILIARY OPERATOR (S) . SEVERAL RECOMMENDATIONS ARE BEING EVALUATED BY THE BIG ROCK STAFF TO PREVENT RECURRENCE .

Component Failures

	Cause	System	Component	Manufacturer Code	NPRDS?
1.					
2.					
3.					
4.					
5.					
6.					
7.					
8.					
9.					
10.					

Film Number 0004959F08-0
??

LER Data

Reactor Type..... BWR
Reactor MFR..... GE
Operating Mode..... 1
Power Level..... 000
Applicable Law(s)..... 1.5
Contact Name..... LECHMAIER J
Contact Phone..... 309-654-2241
Revision..... 0
Pages..... 8
Report Date..... 10/18/1989
Supplimental Report Date.
Other Dockets..... 425

LERTS Data

SOER.....
SEN.....
SER.....
Other Reference..... IEC77-12????????????????????????

Title

NEW FUEL ASSEMBLY DROPPED IN FUEL POOL WHEN REFUEL BRIDGE FUEL GRAPPLE RELEASED DUE TO PERSONNEL ERROR AND LACK OF PROCEDURAL GUIDANCE

Abstract

ON SEPTEMBER 21 , 1989 , UNIT ONE WAS IN THE SHUTDOWN MODE WITH ALL FUEL REMOVED FROM THE REACTOR VESSEL . AT 1410 HOURS , DURING THE TRANSFER OF NEW FUEL FROM THE NEW FUEL STORAGE VAULT TO THE FUEL POOL , FUEL ASSEMBLY LYT191 WAS RELEASED FROM THE REFUELING GRAPPLE AND FELL UPON SPENT FUEL RACKS . THE GRAPPLE CONTROL SWITCH WAS INADVERTENTLY LEFT IN THE RELEASE POSITION AFTER ATTEMPTING TO UNLATCH . THE UNLATCHING FAILURE WAS DUE TO THE ADJACENT ASSEMBLY NOT BEING FULLY SEATED . THE CAUSE OF FUEL ASSEMBLY DROP WAS A COMBINATION OF PERSONNEL ERROR AND PROCEDURAL DEFICIENCY . CORRECTIVE ACTION INCLUDED A REFUEL BRIDGE HOIST CIRCUITRY MODIFICATION TO PREVENT RAISING A FUEL ASSEMBLY WITH THE GRAPPLE CONTROL SWITCH IN RELEASE . THE FUEL HANDLING PROCEDURES WERE REVISED TO ASSURE PROPER FUEL ASSEMBLY SEATING AND PROPER POSITIONING OF THE GRAPPLE CONTROL SWITCH . THIS REPORT IS SUBMITTED TO COMPLY WITH THE REQUIREMENTS OF 10CFR20.405(A)(1)(IV) .

Component Failures

	Cause	System	Component	Manufacturer Code	NPRDS?
1.					
2.					
3.					
4.					
5.					
6.					
7.					
8.					
9.					
10.					

Film Number 0003914005-0
??

331-75000-00 DUANE ARNOLD 1 Event Date 06/10/1975

LER Data

Reactor Type..... BWR
Reactor MFR..... GE
System..... RC
Cause..... B
Sub-Cause..... *
Component..... FUEL
Sub-Component..... Z
Valve Sub-Code..... Z
Component Supplier..... *
MPRDS?.....
Component Manufacturer... *
Facility Status..... G
Power Level..... 0
Other Status..... NA
Action Taken..... *
Future Action..... *
Effect on Plant..... *
Shutdown Method..... Z
Outage Hours..... 0
Discovery Method..... A
Discovery Description.... NA
Occurrence Type..... 01
Activity Form..... Z
Activity Content..... Z
Activity Amount..... NA
Release Location..... NA
Number of Exposures..... 0
Exposure Type..... Z
Exposure Description..... ?NA

Number of Injuries..... 0
Injury Description..... NAA??????????????????????????????
????????????????????????????????
Damage Type..... Z
Damage Description..... NA

Revision..... 0
Report Date..... 09/30/1975

Event Description

A FUEL BUNDLE WAS INADVERTENTLY DROPPED DURING FUEL MOVEMENT WHILE INSPECTING FOR FUEL CHANNEL WEAR. THE BUNDLE DROPPED FROM THE REFUELING BRIDGE FUEL GRAPPLE APPROXIMATELY 30 FT. INTO THE CORE. NO INCREASE IN AIRBORNE OR WATER ACTIVITY. (50-331/75-31A)

Cause Description

THE DESIGN OF THE FUEL GRAPPLE DID NOT PROVIDE AN ADEQUATE METHOD FOR POSITIVE VERIFICATION OF PROPER GRAPPLE. DESIGN CHANGES WILL BE IMPLEMENTED ASAP.

Film Number 013471

LER Data

Reactor Type..... PWR
Reactor MFR..... GE
System..... FD
Cause..... E
Sub-Cause..... *
Component..... FUEL
Sub-Component..... Z
Valve Sub-Code..... Z
Component Supplier..... *
NPRDS?.....
Component Manufacturer.... *
Facility Status..... N
Power Level..... 0
Other Status..... N/A
Action Taken..... *
Future Action..... *
Effect on Plant..... *
Shutdown Method..... Z
Outage Hours..... 0
Discovery Method..... A
Discovery Description.... N/A
Occurrence Type..... 01
Activity Form..... Z
Activity Content..... Z
Activity Amount..... N/A
Release Location..... N/A
Number of Exposures..... 0
Exposure Type.....
Exposure Description..... ?N/A

Number of Injuries..... 0
Injury Description..... N/A??????????????????????????????
????????????????????????????????
Damage Type.....
Damage Description..... N/A

Revision..... 0
Report Date..... 04/13/1970

Film Number 004023

Event Description

A BASKET LOADED WITH FOUR FUEL ELEMENTS WAS DROPPED APPROXIMATELY 4 FEET.

Cause Description

FAILURE OF FOUR BOLTS HOLDING GRAPPLE HEAD TO TOOL EXTENSION FAILED.

ATTACHMENT III
Estimated Frequency of Through-Wall Manufacturing Defects

This attachment provides the calculational details using an Excel spreadsheet to support the estimation of the frequency of through-wall manufacturing defects of a WP. This attachment provides a calculation for both approaches to the manufacture of the inner barrier: *weld clad inner barrier* approach and *cylinder in a cylinder* approach (Reference 5.36).

Volume of Weld Material in the Waste Package

Defect densities are typically reported in terms of defects per m^3 of weld material. The volume of weld material required for the welding of the outer barrier base material sections and the weld cladding of the inner barrier (*weld clad* approach) can be obtained from the information in WP cost analyses (Reference 5.33). For the cylinder in a cylinder approach, the amount of weld material is estimated to be 20% of that required to weld the base material sections of the outer barrier. This is based on the fact that the inner barrier weld thickness is 20 mm (or 20% of the 100 mm weld thickness for the outer barrier).

Outer Barrier

Parameter	Value	Reference/Method
Number of pounds of weld material for the outer barrier of a 21PWR WP	300 lbs	Reference 5.4
Number of kilograms of weld material for the outer barrier of a 21PWR WP	136.05 kg	Using a conversion factor of 1 kg = 2.205 lbs
Density of A516 carbon steel	7832 kg/m^3	Reference 5.34
Volume of weld material, V_{ob}	0.0174 m^3	Mass / Density

Inner Barrier - Weld Clad

Parameter	Value	Reference/Method
Number of pounds of weld material for the inner barrier of a 21PWR WP	8941 lbs	Reference 5.33
Number of kilograms of weld material for the inner barrier of a 21PWR WP	4054.88 kg	Using a conversion factor of 1 kg = 2.205 lbs
Density of Alloy 825*	8140 kg/m^3	Reference 5.35
Volume of weld material, V_{ibwc}	0.4981 m^3	Mass / Density

* - While Alloy 625 is the current inner barrier material, Ref. 5.33 used Alloy 825, and therefore, it must be used here to back calculate the weld material volume.

Inner Barrier - Cylinder in a Cylinder

Parameter	Value	Reference/Method
Number of pounds of weld material for the inner barrier of a 21PWR WP	60 lbs	Assumption 4.3.4
Number of kilograms of weld material for the inner barrier of a 21PWR WP	27.21 kg	Using a conversion factor of 1 kg = 2.205 lbs
Density of Alloy 625	8440 kg/m^3	Reference 5.35
Volume of weld material, V_{ibcc}	0.0032 m^3	Mass / Density

Distributions of Defect Size for Various Type of Welds Similar to WP Welds

Chapman (Reference 5.32) has developed a computer simulation for predicting weld defect density and depth distributions for post-inspection welds based on an extensive survey of expert opinion and experimental data. This simulation was run for three specific cases where actual defect density and depth data had been collected from finished and inspected welds. The three cases were:

- Nuclear Electric's (NE) data from extensive inspection of Magnox ducting welds. There were 25.4 mm single V manual metal arc and sub-arc welds inspected by root dye penetrant and single image radiography.
- British Nuclear Fuels Ltd. (BNFL) data from their pressure vessel weld inspections. These were 51 mm double V metal arc welds inspected by root dye penetrant and single image radiography.
- The Midland Reactor Pressure Vessel seam welds. These were 217.5 mm sub-arc welds inspected by root dye penetrant, single image radiography, plus a final dye penetrant.

The probability density function predicted for each case is contained in the table below. For each case, the simulation predicted PDF was found to be conservative when compared to the actual data. Further note that for the NE data, the follow PDF was used:

$$p(x) = A^{B}\ B\ x^{-(B+1)}\ e^{-(x/A)^{-B}}$$

where A = 1.2855, B = 2.857 and x is the defect depth in mm. Note that for the latter two cases, there were insufficient data to develop a function PDF, and the values were taken from the simulation prediction. Also note that the last two points for the BNFL welds were extrapolated from the information provided.

Chapman Simulation of Three Welds

% Wall Thickness	NE 25.4 mm Probability	BNFL 51 mm Probability	Midland 217.5 mm Probability
10	1.39E-01	4.00E-02	2.00E-04
15	3.21E-02	9.00E-03	4.00E-05
20	1.09E-02	2.00E-03	1.60E-05
25	4.64E-03	1.20E-03	1.00E-05
30	2.30E-03	1.70E-04	7.30E-06
35	1.27E-03	1.70E-05	3.00E-06
40	7.63E-04	1.00E-05	7.00E-07
45	4.85E-04	9.00E-06	6.00E-07
50	3.23E-04	3.50E-06	1.20E-07
55	2.24E-04	1.00E-06	1.20E-09
60	1.60E-04	1.80E-06	9.00E-09
65	1.17E-04	2.00E-06	6.50E-09
70	8.83E-05	9.00E-07	5.80E-09
75	6.77E-05	7.00E-07	4.50E-09

Based on the above table, the cumulative probability that a defect will exceed a given percentage of wall thickness can be determined for each weld thickness by numerically integrating the probability of the greater defect depths. For example the probability of exceeding a 20% wall thickness defect for the NE data is the sum of the probabilities in the NE column from 20% to 75%. The table below summarizes the results of the numerical integration:

	NE 25.4 mm Probability (from Weibull)	BNFL 51 mm Probability	Midland 217.5 mm Probability
Prob. of defect exceeding 20% through-wall	2.13E-02	3.42E-03	3.77E-05
Prob. of defect exceeding 30% through-wall	5.81E-03	2.16E-04	1.17E-05
Prob. of defect exceeding 40% through-wall	2.23E-03	2.89E-05	1.45E-06
Prob. of defect exceeding 50% through-wall	9.80E-04	9.90E-06	1.47E-07

Figure III-1

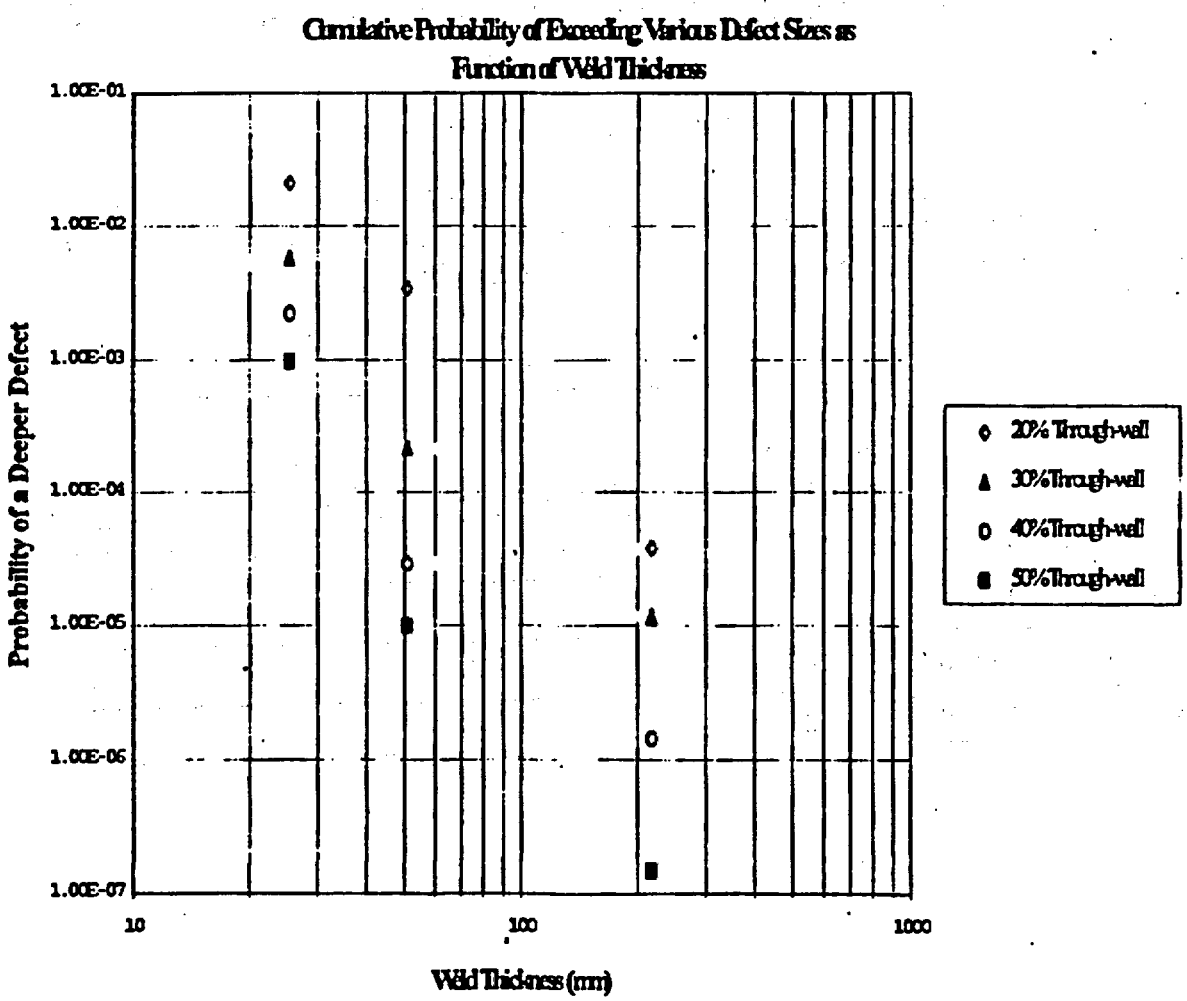

Figure III-1 shows the cumulative probabilities of exceeding defect size as a function of weld thickness. Linearly interpolating for 100 mm (outer barrier thickness) and 20 mm (inner barrier thickness) results in the following table:

	Interpolation at 100 mm	Interpolation at 20 mm
Prob. of defect exceeding 20% through-wall	2.42E-03	1.43E-02
Prob. of defect exceeding 30% through-wall	1.56E-04	3.62E-03
Prob. of defect exceeding 40% through-wall	2.08E-05	1.37E-03
Prob. of defect exceeding 50% through-wall	7.03E-06	6.00E-04

Chapman simulation also predicts the weld defect density for the three cases. In each case, his model overpredicts the defect density by at least a factor of 6 or 7. The Midland model predicted 390 defects/m^3 and is the largest predicted value of any of the cases. To be conservative (at least by a factor of 6 or 7), the Midland predicted defect density will be used for the remainder of this calculation.

Estimation of the Probability of WP Defects of Various Depths

To estimate the probability of WP defects of various depths for the inner and outer barrier requires multiplying the probability of a defect exceeding a certain depth by the number of defects (defect density times the weld volume). These are given in the table below.

	Outer Barrier		
	Prob. of defect exceeding a certain depth	Number of defects (390 defect/m^3)*(0.0174m^3)	Probability of defect/WP
> 20% through-wall	2.42E-03	6.79	1.64E-02
> 30% through-wall	1.56E-04	6.79	1.06E-03
> 40% through-wall	2.08E-05	6.79	1.41E-04
> 50% through-wall	7.03E-06	6.79	4.76E-05

	Inner Barrier (Weld Clad)		
	Prob. of defect exceeding a certain depth	Number of defects (390 defect/m³)*(0.4981m³)	Probability of defect/WP
> 20% through-wall	1.43E-02	194.26	2.78E 00
> 30% through-wall	3.62E-03	194.26	7.02E-01
> 40% through-wall	1.37E-03	194.26	2.65E-01
> 50% through-wall	6.00E-04	194.26	**1.17E-01**

	Inner Barrier (Cylinder in a Cylinder)		
	Prob. of defect exceeding a certain depth	Number of defects (390 defect/m³)*(0.0032m³)	Probability of defect/WP
> 20% through-wall	1.43E-02	1.25	1.80E-02
> 30% through-wall	3.62E-03	1.25	4.55E-03
> 40% through-wall	1.37E-03	1.25	1.72E-03
> 50% through-wall	6.00E-04	1.25	**7.54E-04**

The values that are bold in the shaded cells are the ones primarily used in the development presented in Section 7.

DEFECT2.XLS - Sheet1

Defect Depth		Chapman Simulation PDFs				Defect	Weibull PDF for			
% Through-wall		25.4 mm	51 mm	217.5 mm		Depth (mm)	25.4 mm weld			
0.1		5.50E-02	9.00E-01	9.90E-01		0.0254	0.00E+00	Weibull Parameters		
5		6.80E-01	4.00E-01	7.00E-03		1.27	8.27E-01	A=	1.285	
10		2.20E-01	4.00E-02	2.00E-04		2.54	1.39E-01	B=	2.857	
15		8.50E-02	9.00E-03	4.00E-05		3.81	3.21E-02			
20		2.90E-02	2.00E-03	1.60E-05		5.08	1.09E-02			
25		7.00E-03	1.20E-03	1.00E-05		6.35	4.64E-03			
30		4.50E-03	1.70E-04	7.30E-06		7.62	2.30E-03			
35		2.00E-03	1.70E-05	3.00E-06		8.89	1.27E-03			
40		9.00E-04	1.00E-05	7.00E-07		10.16	7.63E-04			
45		8.00E-04	9.00E-06	6.00E-07		11.43	4.85E-04			
50		5.60E-04	3.50E-06	1.20E-07		12.7	3.23E-04			
55		1.50E-04	1.00E-06	1.20E-09		13.97	2.24E-04			
60		1.20E-03	1.80E-06	9.00E-09		15.24	1.60E-04			
65		1.30E-04	2.00E-06	6.50E-09		16.51	1.17E-04			
70		9.00E-05	9.00E-07	5.80E-09		17.78	8.83E-05			
75		7.00E-05	7.00E-07	4.50E-09		19.05	6.77E-05			
		1.09E+00	1.35E+00	9.97E-01			1.02E+00			
Defect Depth	Cummulative Probability of a Defect Exceeding Depth for Chapman Welds									
		Weibull								
% Through-wall	25.4	25.4	51	217.5						
>20%	4.64E-02	2.13E-02	3.42E-03	3.77E-05						
>30%	1.04E-02	5.81E-03	2.16E-04	1.17E-05						
>40%	3.90E-03	2.23E-03	2.89E-05	1.45E-06						
>50%	2.20E-03	9.80E-04	9.90E-06	1.47E-07						
	Interpolation of cummulative probabilities for different weld thicknesses									
Defect Depth	Weld thickness (mm)		Defect Depth	Weld thickness (mm)						
% Through-wall	100		% Through-wall	20	Weibull					
>20%	2.42E-03		>20%	5.55E-02	1.43E-02					
>30%	1.56E-04		>30%	1.25E-02	3.62E-03					
>40%	2.08E-05		>40%	4.72E-03	1.37E-03					
>50%	7.03E-06		>50%	2.66E-03	6.00E-04					

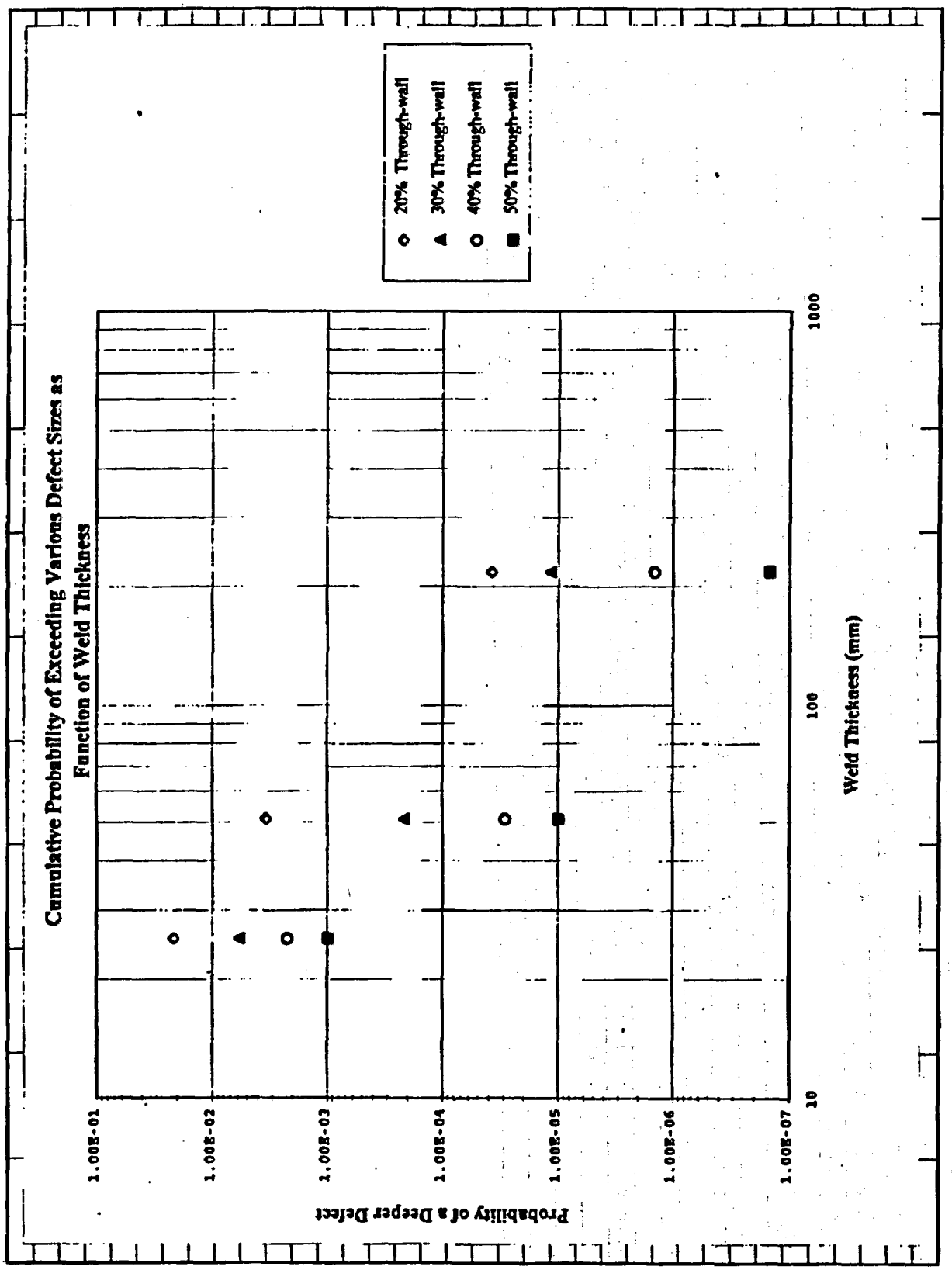
DEFECT1.XLS - Sheet1
Cumulative Probability of Exceeding Various Defect Sizes as Function of Weld Thickness
20% Through-wall
30% Through-wall
40% Through-wall
50% Through-wall
Probability of a Deeper Defect
1.00E-01
1.00E-02
1.00E-03
1.00E-04
1.00E-05
1.00E-06
1.00E-07
10
100
1000
Weld Thickness (mm)

	UCF/PWR 21				
	Outer Barrier	Inner Barrier			
Material	Carbon Steel	Alloy 825	Alloy 625		
Density (kg/m3)	7832	8140	8440		
Thickness (mm)	100	20	20		
lbs	300	8941	60		
kg	136.05	4054.88	27.21		
Volume (m3)	0.0174	0.4981	0.0032		
Defect Density (#/m3)					
390	Outer Barrier	Inner Barrier - Chapman sim		Inner Barrier - Weibull	
Number of Defects	100 mm weld	weld clad 20 mm	cyl. in cyl. 20	weld clad 20 mm	cyl. in cyl. 20 mm
20%	1.64E-02	1.08E+01	6.97E-02	2.78E+00	1.80E-02
30%	1.06E-03	2.44E+00	1.58E-02	7.02E-01	4.55E-03
40%	1.41E-04	9.16E-01	5.93E-03	2.65E-01	1.72E-03
50%	4.76E-05	5.17E-01	3.35E-03	1.17E-01	7.54E-04

Transporter Derailment Frequency Calculation

Rail Accident Frequency Data Analysis						
	Derailment Frequency					
Year	Per Million Miles	References				
1975	8.34	NUREG/CR-4829 & FRA Bul 163 Fig 5				
1976	10.22	NUREG/CR-4829 & FRA Bul 163 Fig 5				
1977	10.75	NUREG/CR-4829 & FRA Bul 163 Fig 5				
1978	11.66	NUREG/CR-4829 & FRA Bul 163 Fig 5				
1979	9.83	NUREG/CR-4829 & FRA Bul 163 Fig 5				
1980	8.99	NUREG/CR-4829 & FRA Bul 163 Fig 5				
1981	6.46	NUREG/CR-4829 & FRA Bul 163 Fig 5				
1982	5.9	NUREG/CR-4829 & FRA Bul 163 Fig 5				
1983	5.4	Est. Based on FRA Bul 163 Fig 5				
1984	4.9	Est. Based on FRA Bul 163 Fig 5				
1985	4.4	Est. Based on FRA Bul 163 Fig 5				
1986	3.6	Est. Based on FRA Bul 163 Fig 5				
1987	3.3	Est. Based on FRA Bul 163 Fig 5				
1988	3.4	Est. Based on FRA Bul 163 Fig 5				
1989	3.43	FRA Bul 163 Fig 5 and Table 5				
1990	3.53	FRA Bul 163 Fig 5 and Table 5				
1991	3.36	FRA Bul 163 Fig 5 and Table 5				
1992	2.92	FRA Bul 163 Fig 5 and Table 5				
1993	3.14	FRA Bul 163 Fig 5 and Table 5				
1994	2.79	FRA Bul 163 Fig 5 and Table 5				
1995	2.6	FRA Bul. 164 Fig 5 and Table 5				
21 Year Avg.	5.66	per million miles	3.52	per million km		
75-81 Avg.	9.46	per million miles	5.88	per million km		
Last 10 Yrs.	3.21	per million miles	1.99	per million km		

Transporter Derailment Frequency Calculation

Derailments By Cause from FRA Bulletins 162, 163, 164					
Tables 19 to 23					
	Number of Derailments				
Cause	**1993**	**1994**	**1995**	**Total**	**% of Total**
Track, Roadbed & Structures	926	857	785	2568	46.72%
Locomotive Failure	24	17	11	52	0.95%
Car Failure	263	239	231	733	13.33%
Train Operation - Human Factors	470	462	489	1421	25.85%
Misc. - Environ,, Highway, etc.	247	250	226	723	13.15%
Total	1930	1825	1742	5497	100.00%
Average Yard Derailment Rate (1993-1995) from FRA Bulletins 162, 163, 164					
Tables 10 and 36					
	1993	**1994**	**1995**	**Total**	
Yard Derailments	955	902	821	2678	(Table 10)
Yard/Switch Miles	87121756	89,776,044	89,891,868		(Table 36)
Yard Derailments/million yard miles	10.96	10.05	9.13		
Yard Derailments/million yard km	6.81	6.24	5.68		
Average Yard Derailment Rate =	10.05	per million yard miles			
	6.24	per million yard km			
Number of times the average yard derailment rate is greater than the overall derailment rate in the last 3 years		3.53			
Number of yard derailments (1-10 mph) from FRA Bulletins 162, 163, 164					
	1993	**1994**	**1995**	**Total**	
Number of yard derailments (1-10 mph	906	856	775	2537	(Table 10)
% Yard derailments 93-95 (1-10 mph)				94.73%	

Transporter Derailment Frequency Calculation

Percent of derailments at 1-10 mph from FRA Bulletin 162, 163, 164 (Table 10)						
Derailments	1993	1994	1995	Total		
Main Line (1-10 mph)	295	284	273	852		
Yard Line (1-10 mph)	906	856	775	2537		
Industry/Siding/Unknown (1-10)	199	188	196	583		
Total (1-10 mph)				3972		
Total Derailments (All speeds)	1930	1825	1742	5497		
Percentage of derailments at 1-10 mph				72.26%		
Percent of Switch-Related Causes of Derailment from FRA Bulletin (162, 163, 164) Table 19						
Switch-related Derailment Causes	1993	1994	1995	Total		
Frogs, Switches and track appliances	247	216	192	655		
General switching rules	112	117	118	347		
Switches, use of	116	126	133	375		
Total switch-related derailment causes	475	459	443	1377		
Total Derailment Accidents	1930	1825	1742	5497		
% of switch-related caused of derailment				25.05%		
Transport Derailment Frequency						
All Derailments						
Based on last 10 years	1.99	per million km				
Derailments in 1-10 mph range	1.44	per million km		Multiply by total % of derailments at 1-10 mph using 1993-1995 data		
Yard Line Derailments						
Based on last 10 years	7.04	per million km		Multiply all derailment by factor using 1993-1995 data		
Derailments in 1-10 mph range	6.67	per million km		Multiply by % of yard derailment at 1-10 mph using 1993-1995 data		

WP Internal Pressure as a Function of Gas Temperature for Normal, Off-Normal, and Accident Conditions

Volumes		Based on Attachment VI									
21 PWR WP Void Space		4.520	m^3								
44 BWR WP Void Space		4.430	m^3					**Max. Fuel Rod Internal Pressure in Fuel Pool**			
									Reg. Guide 1.25 (Ref. 5.41)		
Mark B Fuel Rod Volume		m^3		GE 8x8 Fuel Rod Volum		m^3			psig	1200	
Plenum Volume		1.41E-05		Plenum Volume		1.31E-05			psia	1214.7	
Annular Volume		1.08E-06		Annular Volume		1.47E-07		Prod	MPa	8.375	
Dish Volume		5.24E-06		Dish Volume		0.00E+00					
Porosity Volume		1.66E-06		Porosity Volume		5.05E-06					
Total Rod Void Space		2.21E-05		Total Rod Void Space		1.83E-05					
208 Rod Fuel Assembly		4.59E-03		62 Rod Fuel Assembly		1.14E-03		**Max. Fuel Rod Internal Gas Temperature**			
21 Fuel Assembly Volum		9.65E-02		44 Fuel Assembly WP		5.00E-02			Degrees F	125	
									Degrees C	51.667	
Fuel Rod Volumes based on Ref. 5.10								Tpool	Kelvin	324.817	
								Conservatively assumed to be max. fuel pool temperatue			
								based on Davis Besse Technical Specifications (Ref. 5.42)			
Total Ruptured			Moles of Gas		WP + Ruptured						
Fuel Rod Volume (m^3)			Released (nrod)		Fuel Rod Volume (m^3)			WP He Fill Gas			
% Rods	21 PWR	44 BWR	21 PWR	44 BWR	21 PWR	44 BWR		Fill Pressure		14.7	psia
100%	9.65E-02	5.00E-02	2.99E-04	1.55E-04	4.616	4.480		(assumption)		1.01E-01	MPa
10%	9.65E-03	5.00E-03	2.99E-05	1.55E-05	4.530	4.435		Fill Temperature		25	C
1%	9.65E-04	5.00E-04	2.99E-06	1.55E-06	4.521	4.430		(assumption)		298.15	K
			n=(Prod*Vrod)/(R*Tpool)					21 PWR Moles of Gas		1.85E-04	
								44 BWR Moles of Gas		1.81E-04	
								(nfill)			
R (gas constant)		8.314	kJ/kmol*K								

	Average					21 PWR Waste Package Internal Pressure					Normal WP Fill Gas	
Gas Temperature			P(Rod)		100% Rods Ruptured		10% Rods Ruptured		1% Rods Ruptured		Pressure	
F	C	K	psig	MPa	MPa	psia	MPa	psia	MPa	psia	psia	MPa
77	25	298.15	1101.48	7.59	0.26	37.70	0.12	17.04	0.10	14.93	14.70	0.10
122	50	323.15	1193.84	8.23	0.28	40.86	0.13	18.47	0.11	16.19	15.93	0.11
212	100	373.15	1378.56	9.50	0.33	47.18	0.15	21.33	0.13	18.69	18.40	0.13
302	150	423.15	1563.28	10.78	0.37	53.50	0.17	24.19	0.15	21.20	20.86	0.14
392	200	473.15	1748.00	12.05	0.41	59.82	0.19	27.05	0.16	23.70	23.33	0.16
482	250	523.15	1932.72	13.33	0.46	66.15	0.21	29.91	0.18	26.21	25.79	0.18
572	300	573.15	2117.44	14.60	0.50	72.47	0.23	32.76	0.20	28.71	28.26	0.19
662	350	623.15	2302.16	15.87	0.54	78.79	0.25	35.62	0.22	31.21	30.72	0.21
752	400	673.15	2486.88	17.15	0.59	85.11	0.27	38.48	0.23	33.72	33.19	0.23
842	450	723.15	2671.60	18.42	0.63	91.43	0.29	41.34	0.25	36.22	35.65	0.25
932	500	773.15	2856.32	19.69	0.67	97.76	0.30	44.20	0.27	38.73	38.12	0.26
1022	550	823.15	3041.04	20.97	0.72	104.08	0.32	47.06	0.28	41.23	40.58	0.28
					All of above uses ideal gas law P=(nrod+nfill)*R*T/V							

	Average					44 BWR Waste Package Internal Pressure					Normal WP Fill Gas	
Gas Temperature			P(Rod)		100% Rods Ruptured		10% Rods Ruptured		1% Rods Ruptured		Pressure	
F	C	K	psig	MPa	MPa	psia	MPa	psia	MPa	psia	psia	MPa
77	25	298.15	1101.48	7.59	0.19	26.97	0.11	15.94	0.10	14.82	14.70	0.10
122	50	323.15	1193.84	8.23	0.20	29.24	0.12	17.28	0.11	16.07	15.93	0.11
212	100	373.15	1378.56	9.50	0.23	33.76	0.14	19.95	0.13	18.55	18.40	0.13
302	150	423.15	1563.28	10.78	0.26	38.28	0.16	22.62	0.15	21.04	20.86	0.14
392	200	473.15	1748.00	12.05	0.30	42.81	0.17	25.30	0.16	23.53	23.33	0.16
482	250	523.15	1932.72	13.33	0.33	47.33	0.19	27.97	0.18	26.01	25.79	0.18
572	300	573.15	2117.44	14.60	0.36	51.85	0.21	30.64	0.20	28.50	28.26	0.19
662	350	623.15	2302.16	15.87	0.39	56.38	0.23	33.32	0.21	30.98	30.72	0.21
752	400	673.15	2486.88	17.15	0.42	60.90	0.25	35.99	0.23	33.47	33.19	0.23
842	450	723.15	2671.60	18.42	0.45	65.43	0.27	38.66	0.25	35.96	35.65	0.25
932	500	773.15	2856.32	19.69	0.48	69.95	0.28	41.33	0.27	38.44	38.12	0.26
1022	550	823.15	3041.04	20.97	0.51	74.47	0.30	44.01	0.28	40.93	40.58	0.28
					All of above uses ideal gas law P=(nrod+nfill)*R*T/V							

INTACT AUCF WP INTERNAL VOLUMES

WP Inner Dimmensions

21 PWR WP Inner Diameter $PID := 1.4099 \cdot m$

44 BWR WP Inner Diameter $BID := 1.3639 \cdot m$

WP Inner Length $IL := 4.635 \cdot m - 2 \cdot 0.025 \cdot m$

All dimensions from Attachment I

Vol. of 21 PWR AUCF WP Carbon Steel Tube

$VTUBE := \left[(236.4 \cdot mm)^2 - (226.4 \cdot mm)^2\right] \cdot 4575 \cdot mm$ $\quad VTUBE = 2.117 \cdot 10^7 \cdot mm^3$

Vol. of 21 PWR Borated SS Basket Plates

$VAPLATE := (1210 \cdot mm \cdot 1133.8 \cdot mm - 4 \cdot 7 \cdot mm \cdot 566.9 \cdot mm) \cdot 7 \cdot mm$

$VBPLATE := (1210 \cdot mm \cdot 1133.8 \cdot mm - 4 \cdot 7 \cdot mm \cdot 566.9 \cdot mm) \cdot 7 \cdot mm$

$VCPLATE := (723.2 \cdot mm \cdot 1133.8 \cdot mm - 2 \cdot 7 \cdot mm \cdot 566.9 \cdot mm) \cdot 7 \cdot mm$

$VPLATES := (4 \cdot VCPLATE + 2 \cdot VAPLATE + 2 \cdot VBPLATE) \cdot 4$ $\quad VPLATES = 0.243 \cdot m^3$

Vol. of Carbon Steel Guides, Corner Guides & Stiffeners

$VSIDEGDA := 1128.8 \cdot mm \cdot 723.2 \cdot mm \cdot 10 \cdot mm$ $\quad VSIDEGDB := 80.1 \cdot mm \cdot 1128.8 \cdot mm \cdot 10 \cdot mm$

$VSIDEGDASM := VSIDEGDA + 2 \cdot VSIDEGDB$

$\phi := 2 \cdot asin\left(\frac{0.5 \cdot 723.2}{704.8}\right)$ $\quad VSIDECOVR := \left[\frac{1}{2} \cdot (704.8 \cdot mm)^2 \cdot (\phi - sin(\phi)) - \frac{\pi \cdot (20 \cdot mm)^2}{4}\right] \cdot 10 \cdot mm$

$VCORNGUIDE := (243.4 \cdot mm + 233.4 \cdot mm) \cdot 10 \cdot mm \cdot 1133.8 \cdot mm$

$b := \sqrt{(227.3 \cdot mm)^2 + (227.3 \cdot mm)^2}$ $\quad \theta := 2 \cdot asin\left(\frac{0.5 \cdot b}{704.8 \cdot mm}\right)$ $\quad VSTIFFNR := \left[\frac{(227.3 \cdot mm)^2}{2} + \frac{1}{2} \cdot (704.8 \cdot mm)^2 \cdot (\theta - sin(\theta)) - \frac{\pi \cdot (20 \cdot mm)^2}{4}\right] \cdot 10 \cdot mm$

$VCORNGDASM := VCORNGUIDE + 2 \cdot VSTIFFNR$

$VGUIDES := 16 \cdot VSIDEGDASM + 16 \cdot VCORNGDASM + 8 \cdot VSIDECOVR$ $\quad VGUIDES = 0.259 \cdot m^3$

Vol. of 21PWR AUCF WP Basket Assembly (tubes, SS-B plates, & structural members)

$VBAS := VPLATES + VGUIDES + 21 \cdot VTUBE$ $\quad VBAS = 0.947 \cdot m^3$

Vol. of 44 BWR Borated SS Basket Plates

$BVABPLATE := (1289.2 \cdot mm \cdot 1143.8 \cdot mm - 7 \cdot 10 \cdot mm \cdot 571.9 \cdot mm) \cdot 10 \cdot mm$

$BVCPLATE := (314.8 \cdot mm \cdot 1143.8 \cdot mm - 10 \cdot mm \cdot 571.9 \cdot mm) \cdot 10 \cdot mm$

$BVDEPLATE := (964.4 \cdot mm \cdot 1143.8 \cdot mm - 5 \cdot 10 \cdot mm \cdot 571.9 \cdot mm) \cdot 10 \cdot mm$

$BVPLATES := (4 \cdot BVCPLATE + 2 \cdot BVABPLATE + 8 \cdot BVDEPLATE) \cdot 4$

$BVPLATES = 0.515 \cdot m^3$

Vol. of Carbon Steel Guides, Corner Guides & Stiffeners

$BVSIDEGDASM := 1143.8 \cdot mm \cdot 314.8 \cdot mm \cdot 10 \cdot mm + 27.3 \cdot mm \cdot 1143.8 \cdot mm \cdot 10 \cdot mm$

$BVCORNGUIDE := (171.3 \cdot mm + 324.8 \cdot mm) \cdot 10 \cdot mm \cdot 1143.8 \cdot mm$

$b := \sqrt{(304.6 \cdot mm)^2 + (168.9 \cdot mm)^2} \quad \theta := 2 \cdot asin\left(\frac{0.5 \cdot b}{681.9 \cdot mm}\right)$

$$VSTIFFNR := \left[\frac{1}{2} \cdot 168.9 \cdot 304.6 \cdot mm^2 + \frac{1}{2} \cdot (681.9 \cdot mm)^2 \cdot (\theta - sin(\theta)) - \frac{\pi \cdot (20 \cdot mm)^2}{4}\right] \cdot 10 \cdot mm$$

$BVCORNGDASM := BVCORNGUIDE + 2 \cdot VSTIFFNR$

$BVGUIDES := 4 \cdot 4 \cdot BVSIDEGDASM + 8 \cdot 4 \cdot BVCORNGDASM$ $\qquad BVGUIDES = 0.263 \cdot m^3$

Vol. of 44 BWR AUCF WP Basket Assembly (SS-B plates, & structural members)

$BVBAS := BVPLATES + BVGUIDES$

$BVBAS = 0.778 \cdot m^3$

Vol. of one PWR SNF Assembly $PVSNF := 4927 \cdot in^3$ $PVSNF = 0.081 \cdot m^3$ (Ref. 5.10, p. II 3.6-98)

Vol. of one BWR SNF Assembly $BVSNF := 2063.6 \cdot in^3$ $BVSNF = 0.034 \cdot m^3$ (Ref. 5.10, p. II 3.6-103)

Calculation of Volumes

Total interior volume of empty WP (no basket or fuel)

21 PWR $PVEMPTY := \frac{\pi \cdot PID^2}{4} \cdot IL$ $PVEMPTY = 7.158 \cdot m^3$

44 BWR $BVEMPTY := \frac{\pi \cdot BID^2}{4} \cdot IL$ $BVEMPTY = 6.699 \cdot m^3$

Total volume occupied by all internal structures (basket & fuel)

$PVINT := VBAS + 21 \cdot PVSNF$ $PVINT = 2.642 \cdot m^3$

$BVINT := BVBAS + 44 \cdot BVSNF$ $BVINT = 2.266 \cdot m^3$

Total WP interior void space

21 PWR $PVOID := \frac{\pi \cdot PID^2}{4} \cdot IL - PVINT$ $PVOID = 4.516 \cdot m^3$

44 BWR $BVOID := \frac{\pi \cdot BID^2}{4} \cdot IL - BVINT$ $BVOID = 4.432 \cdot m^3$

ATTACHMENT VII - MISLOAD FREQUENCY CALCULATION

1. Introduction

The purpose of this section is to estimate the frequency of a fuel assembly misload that would result in exceeding the heat rate (thermal limits) or criticality limits of a waste package. This calculation considers three items:

(a) the operational handing of the fuel assemblies from when they are removed from the transport casks to when they are placed (or loaded) into the waste package (Section 7.2),
(b) the consequence of loading any one of the fuel assemblies into any one of the waste packages (section 7.3.1), and
(c) estimate the frequency for the consequences that are identified as being undesirable (section 7.3.2).

Decision trees have been developed for four cases:

Case	Fuel Assembly Type	Consequence
1	PWR fuel assemblies	Exceed Thermal Limits
2	PWR fuel assemblies	Exceed Criticality Limits
3	BWR fuel assemblies	Exceed Thermal Limits
4	BWR fuel assemblies	Exceed Criticality Limits

Each case was developed for only uncanistered fuel. Because canistered fuel, in most cases, will be taken out of the transport cask and placed directly into the WP, there is no opportunity for misloading errors.

The PWR and BWR fuel assembly evaluation are separate and independent. There are no consequences for loading (trying to load) a PWR fuel assemblies in a BWR waste package because the PWR assemblies are larger than a BWR Uncanistered Fuel (UCF) WP. Any attempt to load a PWR assembly into a BWR waste package would be immediately detected and corrected. Similarly, there are no thermal or criticality consequences for the reverse -- loading a BWR fuel assembly into a PWR waste package. In addition to the small size of the BWR assemblies being immediately discovered, the PWR waste packages are designed to about one-half the number of assemblies as the BWR packages. Therefore, even if a PWR package was filled with BWR fuel assemblies, no thermal or criticality limits would be approached.

Based on the analysis in Reference 5.27, the waste package mix in case L1-T4-C1 is used to determine the waste package types. The thermal and criticality limits from case L1-T4-C1 is used to characterize the WP types in this analysis.

2. Fuel Assembly/Waste Package Operational Process

At a minimum, the process in which the fuel assemblies are unloaded from the transportation casks and are readied for loading into a waste package must be considered. As discussed in Reference 5.50, the transport casks are delivered to the repository by truck or rail. They are inspected and decontaminated, if necessary, and delivered to the Waste Handling Building

(WHB). The transport cask is placed in a shield room. The cask is then positioned under a cell port, the port plug is removed, and a conical contamination control barrier is installed. The individual spent fuel assemblies are lifted out of the cask with a crane, one at a time, and placed in a hot cell on racks designed for PWR and BWR assemblies (though these are not the same). Because of the size difference between PWR and BWR assemblies, any misplaced assembly will be immediately discovered and corrected. When the transport cask is empty, the contamination control barrier is decontaminated and removed, the port plug is reinstalled. This process continues until a sufficient number of fuel assemblies have been removed and stored to fill a disposal container (DC).

During the removal process, the operator will need to record the assembly identification and associated heat rate and k_∞ from the licensing paperwork and perform a measurement of burnup a fork detector or some other form of instrumentation for verifying burnup (Ref. 5.51). In this way, the characteristics of assembly in the lag storage racks will be known. Misidentification of the assembly's characteristics and/or location is the first opportunity for a human error that can contribute to a misload (reading the paperwork incorrectly or misreading the fork detector output). The detector can fail, though that will probably quickly be discovered and corrected (assumption 4.3.15a) and thus will not be considered in this analysis.

Based on the characterization of the fuel assemblies removed from the transport casks, the operator must decide what type of DC is to be used. The operator selects the desired DC type (by methods unknown at this time), and positions it under a transfer port. Deciding on an inappropriate DC type or selecting the wrong DC type is the second opportunity for a human error. (assumption 4.3.15 b) GM 4/1/97

Fuel assemblies that require an absorber rod assembly for permanent disposal will often be shipped with a control rod assembly in place. For those assemblies that do not arrive with control (absorber) rod assemblies, one will be inserted while in the lag storage area. This is assumed to be done correctly immediately after the fuel assembly has been unloaded. (assumption 4.3.17) GM 4/1/97

Fuel assemblies are then lowered by crane from the staging racks down through the port and into the DC. The selection of fuel assemblies to be placed in the DC is another opportunity for human error. The operator can select the incorrect assembly, or after selecting the correct assembly for the DC, make a manipulation error with the crane and transfer the wrong assembly. After placing the fuel assemblies in the DC, the operator will perform a physical verification (e.g., ensure that the fuel assembly that was intended to be loaded was). The physical verification process is an opportunity for human error recovery. Finally, the loaded DC is moved to an area where an inner lid is seal-welded in place. The human errors discussed above will be accounted for in section 7.3.2. (assumption 4.3.15 c+d) GM 4/1/97

3. Misload Analysis

3.1 Consequence Matrices

This section develops and discusses the PWR and BWR consequence matrices, which considers the placement of any of the possible transported fuel assemblies into any one of the designed WPs. The WP types, with the heat and criticality ranges were taken from Case L1-T4-C1 tabulated in Attachment IV of Reference 5.27. The cask types used in the matrices were

delineated in Key Assumptions 001 and 002 (Ref. 5.21); thermal ratings for the transport casks were taken from Reference 5.49.

The following explains the cell designations in the PWR and BWR Consequence Matrices shown in Tables 1 and 2.

1. For cell that have been split into thermal and criticality consequences, the criticality consequence is noted with shading of the half-cell.

2. Those cells labeled *As Designed* indicate that a fuel assembly was placed in a WP appropriate for that fuel assembly's thermal and criticality characteristics.

3. Those cells labeled *Recoverable* indicate that if the fuel assembly type is placed in the WP type, the error will be immediately observable to the operator and recovery actions will be immediate, i.e., the probability of recover from this error is 1.0. Note that all the cells that are labeled *Recoverable* deal with either the South Texas (ST) fuel assemblies or the South Texas WP. In the event that a ST fuel assembly is placed in a non-ST WP, the extra length of the fuel assembly will be immediately observable and the proper WP will be selected. In the event that a non-ST fuel assembly is placed in a ST WP, because the fuel assembly will be much shorter than the WP, the physical verification process will immediately flag the mismatch, and the proper fuel assembly or WP will be selected.

4. Those cells labeled *Economic* indicate that a fuel assembly was placed in a WP with more margin (either thermal or criticality) than is required for that fuel assembly. So, while there are no thermal or criticality consequences of this action, a more costly WP is being used unnecessarily, creating an economic impact.

5. Those cells labeled *Possible Thermal* indicate that some percentage of the fuel assemblies placed in the specified WP will exceed the thermal limits of the WP. For example, a fuel assembly taken from an LG Gen cask and placed in a 21 PWR could exceed the 850 W heat rate limit of the WP.

6. Those cells labeled *Possible Criticality* indicate that some percentage of the fuel assemblies placed in the specified WP will exceed the reactivity limits of the WP. While the (transport) Cask Name explicitly indicates a level of heat rate, the reactivity level (e.g., k_∞) is determined by curves attached to each licensed transport cask. Note further that transport casks are licensed for use employing no burn-up credit, i.e., as if it was fresh fuel, and therefore the value of k_∞ is not a deciding parameter for the selection of a transport cask. The value of k_∞ becomes important when determining what WP is to be used because the design takes credit for burnup. Therefore, for any WP that do not required fuel assemblies with absorber rods as criticality control (e.g., use absorber plates or no absorber), it is possible, via human error, to place a fuel assembly into a WP and exceed the criticality limits.

   Some combinations are not credible and will not be considered. If a fuel assembly with an absorber rod assembly is placed in a WP with no absorber or plate absorber, the absorber rod assembly will extend out of the WP. This error should be immediately discovered and corrected. Likewise, if a fuel assembly without an absorber rod assembly is placed into a WP for which an absorber rod assembly is expected, the error should be

discovered when performing the physical verification since the fuel assembly will not fill the WP and look different than the other rod assemblyded fuel assemblies. (assumption 4.3.16) 9/11/97

7. Those cells labeled *Possible Economic* indicate that some percentage of the fuel assemblies placed in the specified WP will exceed the economic considerations for the use of a WP. This designation only applies to placing fuel assemblies into a WP with absorber rod assemblys. There is no concern of a criticality consequence, since this is the most conservative WP design, in terms of criticality. However, if fuel assemblies not requiring the protection provided by absorber rod assemblys were placed into these WP, then an economic consequence will occur.

8. Those cells labeled *Thermal* indicate that a fuel assembly was placed in a WP whose thermal limits are exceeded by the heat rate of the fuel assembly.

Those cells labeled *Thermal* are misloaded. Those cells labeled *Possible Thermal* and *Possible Criticality* also represent some misload situations. The frequency of misloads are discussed in Section 7.3.2.

3.2 Misload Frequency Calculation

Two decision trees (Figures 1 and 2) are developed to evaluate the consequences (thermal and criticality) of misload errors for PWR fuel assemblies into the available waste packages (disposal containers). Two more decision trees (Figures 3 and 4) were developed to similarly evaluate BWR fuel assemblies.

The sequence development is not automatic and relies on a careful consideration of which fuel assemblies are being loaded into what waste packages. Many of the combinations are recoverable, as indicated in the PWR/BWR UCF to Waste Package Consequence Matrices (Tables 1 and 2). The consequence matrices are used to determine whether a sequence has a thermal or criticality consequence.

Some information is not included in the consequence matrices:

- In the data section of the spreadsheet, the number of PWR fuel assemblies in the 0-850 W thermal range has been corrected with the fraction of incoming PWR fuel assemblies below 850 W (the fuel assemblies arrive in transportation casks that can handle up to 1000 W). A similar correction for BWR in the 0-400 W thermal range has also been performed.

- The likelihood of selecting an incorrect fuel assembly to load into the waste package is estimated based on the percentage of a fuel assembly with specific characteristics *from the total number of fuel assemblies to be delivered to the site over a 24 year period.* (assumption 4.3.18) 9/11/97

- When two endstate identifiers are provided (and two endstate probabilities), the first represents the probability of misloading one unintended fuel assembly into the waste package. The second number estimates the probability of misloading two unintended fuel assemblies (of the same type).

- The 21 PWR waste packages that are designed to handle fuel assemblies with absorber rod assemblys are somewhat longer the waster packages with no absorber or with absorber plates to accommodate the absorber rod assembly assembly at the top of the fuel assembly. Accordingly, when fuel assemblies with absorber rod assemblys are placed in anything but the proper waste package, this misload is assumed to be immediately recoverable and corrected. This eliminates many potential criticality consequences of a misload.

- The South Texas (ST) waste packages are approximate two feet longer than any of the other PWR waste packages to accommodate the long ST fuel assemblies. Accordingly, when a ST fuel assembly is misloaded into any other fuel assembly, it is assumed to be immediately recoverable and corrected. Likewise, when any non-ST fuel assemble is misloaded into the ST waste package, it is assumed to be immediately recoverable and corrected. This assumption implies a verification HEP equal to 1.0, and is so reflected in the decision tree.

The calculations performed on the decision tree to generate the endstate probability is simply the product of the probabilities on each node of the endstate sequence. For example, in Figure 4, endstate 6C's probability is calculated as the product of:

Decision Tree Header	Probability
WP Usage (no absorber)	0.275
Select WP (intended WP)	0.994
Select FA (concept)	0.005
FA Type (k-inf >1.37)	0.014
Verification (failure)	0.010
Endstate Probability (Product)	1.95×10^{-7}/WP

This endstate also represents a possible criticality consequence. The total probability of misload leading to a criticality consequence per waste package (shown at the bottom of the decision tree and in the summary tables below) is computed by simply adding all the endstate denoted with *criticality*. These endstates are further highlighted on the decision tree with a double-lined border.

The only exception to the straight multiplication method to calculate an endstate probability is for those endstates derived from a "Select FA" state of *(selection)*. In these cases the product is multiplied by the number of assemblies in the package, since any of the individual assemblies could be misloaded. So if for n_a = 21 PWR, the probability was $p_1 = 7.45 \times 10^{-4}$, then the probability of the endstate would be $(7.45 \times 10^{-4})*(21) = 1.56 \times 10^{-2}$ (see endstate 6T in Table 4). To determine the probability that two assemblies are misloaded, the calculation is:

$$(p_1)(n_a)(p_1)(n_a-1) = (p_1)^2(n_a)(n_a-1)$$

This calculation is used to determine all of the (n)Ta states and is used to compute the probability of a misload leading to a consequence with a mission success definition of two misloaded assemblies representing a possible consequence.

The following table summarizes the results from the PWR decision tree (Figure 1 with supporting Table 4) evaluating the thermal consequences of a misload:

	Mission Success Definition	
	One misloaded assembly represents a possible thermal consequence	Two misloaded assemblies represents a possible thermal consequence
Probability of Misload Leading to a Thermal Consequence per WP	7.68×10^{-5}	4.28×10^{-5}
PWR WPs per year (from Key Assumption 003)	201	201
Probability/Year	1.54×10^{-2}	8.60×10^{-3}

The following table summarizes the results from the PWR decision tree (Figure 2 with supporting Table 5) evaluating the criticality (reactivity) consequences of a misload:

	Mission Success Definition	
	One misloaded assembly represents a possible criticality consequence	Two misloaded assemblies represents a possible criticality consequence
Probability of Misload Leading to a Criticality Consequence per WP	9.82×10^{-5}	4.80×10^{-5}
PWR WPs per year (from Key Assumption 003)	201	201
Probability/Year	1.97×10^{-2}	9.65×10^{-3}

In addition to the results above, a third case was considered: no waste packages designed and used without an absorber, i.e., all waste packages have at least absorber plates. Examination of the decision tree for PWR criticality consequences shows that all sequences of consequence result from the misloading of mid-range ($1.00 < k_\infty < 1.13$) reactive fuel assemblies into a waste package with no absorber. When high-range ($k_\infty > 1.13$) reactive fuel assemblies are misloaded into either a *no-absorber* or *plate-absorber* waste package, the extra length of the rod assemblyded fuel assemblies is enough to ensure that verification will always identify the error. *Accordingly, if there were no waste packages with no absorber, the probability of a misload resulting in a criticality consequence is virtually zero.*

The following table summarizes the results from the BWR decision tree (Figure 3 with supporting Table 6) evaluating the thermal consequences of a misload:

	Mission Success Definition	
	One misloaded assembly represents a possible thermal consequence	Two misloaded assemblies represents a possible thermal consequence
Probability of Misload Leading to a Thermal Consequence per WP	6.46×10^{-5}	4.98×10^{-5}
BWR WPs per year (from Key Assumption 003)	120	120
Probability/Year	7.75×10^{-3}	5.98×10^{-3}

The following table summarizes the results from the two BWR decision tree (Figure 4 with supporting Table 7) evaluating the criticality (reactivity) consequences of a misload:

	Mission Success Definition	
	One misloaded assembly represents a possible criticality consequence	Two misloaded assemblies represents a possible criticality consequence
Probability of Misload Leading to a Criticality Consequence per WP	1.42×10^{-4}	5.63×10^{-5}
BWR WPs per year (from Key Assumption 003)	120	120
Probability/Year	1.70×10^{-2}	6.76×10^{-3}

In addition, a third decision tree was developed (Figure 5, no supporting table) that examines the criticality consequences if there are no waste package without any absorber plates (i.e., two waste package designs: absorber plates and thick absorber plates). This decision tree shows the probability per year of a misload leading to a criticality consequence estimated to be 7.16×10^{-5}.

3.3. Recommendations

Examining the results from a distinct thermal and criticality consequence is conservative. Human errors will not be made on a strictly thermal or criticality basis. From examining the decision trees, it is clear that they only approximate the large number of combinations in which a misload might occur. As an alternative to the methods presented here, a simulation (e.g., Monte Carlo simulation) could be performed that would be accurately model the combination of errors leading to a waste package with a possible thermal and/or criticality consequence. Such a

simulation could more comprehensively consider the arrangement of the storage area, the actual number of stored assemblies, the distribution of fuel assemblies as they arrive in the transport casks, the probability that the absorber rod assembly is not present (when required), etc. These issues were too complex to handle within the decision tree framework.

The analysis should be revisited as the details are developed of how the fuel assemblies are handled from the time they are removed from the transport casks to the time they are placed into a disposal container. Details concerning the procedures and operational practices can be used to further refine the human error probabilities used in this analysis.

TABLE 1

PWR UCF to Waste Package Consequence Matrix

		WP Types	21 PWR no absorber	21 PWR absorber plate	21 PWR absorber rod assemblys	12 PWR no absorber	12 PWR ST long WP
		Heat Range	0-850 W	0-850 W	0-850 W	850-1370 W	0-1370 W
Cask Name	*Thermal Rating*	*Criticality Range* / *Fuel Type*	No absorber k_∞ (0.00 - 1.00)	Absorber plates k_∞ (1.00 - 1.13)	Absorber rod assemblys k_∞ (1.13 - 1.45)	No absorber k_∞ (0.00 - 1.13)	Designed for absorber rod assemblys k_∞ (0.00 - 1.13)
LG Gen	0.7 - 1.0 kW	PWR	Possible Thermal	Possible Thermal	Possible Thermal	Economic	Recoverable
			Possible Criticality	Possible Criticality	Possible Economic	Possible Criticality	
SM Gen	0.7 - 1.0 kW	PWR	Possible Thermal	Possible Thermal	Possible Thermal	Economic	Recoverable
			Possible Criticality	Possible Criticality	Possible Economic	Possible Criticality	
HH UCF	> 1.0 kW	PWR	Thermal	Thermal	Thermal	As designed	Recoverable
			Possible Criticality	Possible Criticality	Possible Economic	Possible Criticality	
HH UCF-SS	> 1.0 kW	PWR	Thermal	Thermal	Thermal	As designed	Recoverable
			Possible Criticality	Possible Criticality	Possible Economic	Possible Criticality	
LG-ST		PWR	Recoverable	Recoverable	Recoverable	Recoverable	As designed

TABLE 2

BWR UCF to Waste Package Consequence Matrix

		WP Types	44 BWR no absorber	44 BWR absorber plate	24 BWR thick absorber plates
		Heat Range	0-400 W	0-400 W	0-520 W
Cask Name	*Thermal Rating*	*Criticality Range* / *Fuel Type*	No absorber k_∞ (0.00 - 1.00)	Absorber plates k_∞ (1.00 - 1.37)	Thick absorber plates k_∞ (0.00 - 1.54)
LG Gen	0.3 - 0.45 kW	BWR	Possible Thermal	Possible Thermal	Possible Thermal
			Possible Criticality	Possible Criticality	Possible Economic
SM Gen	0.3 - 0.45 kW	BWR	Possible Thermal	Possible Thermal	Possible Thermal
			Possible Criticality	Possible Criticality	Possible Economic
HH UCF	> 0.45 kW	BWR	Thermal	Thermal	Thermal
			Possible Criticality	Possible Criticality	Possible Economic
HH UCF-SS	> 0.45 kW	BWR	Thermal	Thermal	Thermal
			Possible Criticality	Possible Criticality	Possible Economic

Table 3 - Input Data Used to Quantify the Decision Trees

Fraction of PWR fuel assemblies at less than 850 W						0.90						
							MK & HK Only		LK & HK Only		LK & MK Only	
							Fraction	Percent	Fraction	Percent	Fraction	Percent
Fraction of PWR fuel assemblies with k-inf between 0.0 and 1.0					(LK)	0.34			0.34	87.18%	0.34	35.79%
Fraction of PWR fuel assemblies with k-inf between 1.00 and 1.13					(MK)	0.61	0.61	92.42%			0.61	64.21%
Fraction of PWR fuel assemblies with k-inf between 1.13 and 1.45					(HK)	0.05	0.05	7.58%	0.05	12.82%		
						1.00	0.66		0.39		0.95	
Fraction of PWR fuel assemblies with k-inf less than 1.13						0.95						
Fraction of PWR fuel assemblies with k-inf greater than 1.13						0.05						
PWR fuel assemblies arriving at the MGDS (uncanistered) (from Key Assumption 002)							HH & ST Only		LH & ST Only		LH & HH Only	
				Corrected	Corrected		Corrected	Corrected	Corrected	Corrected	Corrected	Corrected
	Rail	Truck	Total	Total	Percent		Total	Percent	Total	Percent	Total	Percent
LG/SM Gen	48001	2594	50595	45536	80.11%				45536	96.79%	45536	82.30%
HH	3998	734	4732	9792	17.23%		9792	86.62%			9792	17.70%
ST	1512	0	1512	1512	2.66%		1512	13.38%	1512	3.21%		
Total				56839			11304		47048		55327	
Fraction of BWR fuel assemblies at less than 400 W						0.98						
							MK & HK Only		LK & HK Only		LK & MK Only	
							Fraction	Percent	Fraction	Percent	Fraction	Percent
Fraction of BWR fuel assemblies with k-inf between 0.0 and 1.0					(LK)	0.30			0.30	96.77%	0.30	30.30%
Fraction of BWR fuel assemblies with k-inf between 1.00 and 1.37					(MK)	0.69	0.69	98.57%			0.69	69.70%
Fraction of BWR fuel assemblies with k-inf greater than 1.37					(HK)	0.01	0.01	1.43%	0.01	3.23%		
						1.00	0.70		0.31		0.99	
Fraction of BWR fuel assemblies with k-inf less than 1.37						0.99						
Fraction of BWR fuel assemblies with k-inf greater than 1.37						0.01						
BWR fuel assemblies arriving at the MGDS (uncanistered) (from Key Assumption 002)												
				Corrected	Corrected							
	Rail	Truck	Total	Total	Percent							
LG/SM Gen	59703	3231	62934	61675	96.58%							
HH	799	124	923	2182	3.42%							

Table 3 - Input Data Used to Quantify the Decision Trees

Total				63857								
HEPs (see assumption 4.3.15) GAI 4/4/97												
	HEP	Recovery	HEP w/rec.			HEP	Recovery	HEP w/rec.				
WP-concept	0.005	0	0.005		FA-concept	0.005	0	0.005				
WP-select	0.001	0	0.001		FA-select	0.001	0	0.001				
Total Wrong WP			0.006		Total Wrong FA	0.006		0.006				
Verification/Match	0.01											
Average Coverage for Scenario C1												
		Fraction		Comments								
21 PWR (no absorber)		0.355		LH, LK								
21 PWR (absorber plate)		0.555		LH, MK								
21 PWR (absorber rods)		0.035		LH, HK								
12 PWR (no absorbers)		0.035		HH, LK								
12 PWR (ST, absorber plates)		0.020		HH, MK								
Percentage with no 21 PWR (absorber plates)												
		Fraction	Percent									
21/12 PWR (no absorber)		0.390	87.64%									
21 PWR (absorber rods)		0.035	7.87%									
12 PWR (ST, absorber plates)		0.020	4.49%									
		0.445										
Percentage with no 21 PWR (absorber rods)												
		Fraction	Percent									
21/12 PWR (no absorber)		0.390	40.41%									
21 PWR (absorber plate)		0.555	57.51%									
12 PWR (ST, absorber plates)		0.020	2.07%									
		0.965										

Table 3 - Input Data Used to Quantify the Decision Trees

	Fraction	Comments
21 PWR	0.945	(Sum of 21 PWRs above)
12 PWR (no absorbers)	0.035	
12 PWR/ST	0.020	
PWR (no absorbers)	0.390	(Sum of 21 PWR (no absorber) & 12 PWR (no absorber))
PWR (plate/ST)	0.575	(Sum of 21 PWR (absorber plates) & 12 PWR(ST, absorber plates))
PWR (absorber rods)	0.035	

	Fraction	Comments
44 BWR (no absorber)	0.275	LH, LK
44 BWR (absorber plates)	0.715	LH, MK
24 BWR (thick absorber plates	0.010	HH, HK

Table 4
Endstate Notes for PWR Thermal Consequence Decision Tree

Endstate	Endstate Notes for PWR Thermal Consequence Decision Tree
1T	For thermal consequences, the operator performed every task correctly. That is, one of the 21 PWR waste packages was selected for a low heat fuel assembly. (Criticality consequences are considered in another decision tree.)
2T	For thermal consequences, the operator performed every task correctly, except the final verification. Therefore, there is no thermal consequence due to misloading, however, the fuel assembly records are likely to be corrupted.
3T	The operator made a mental error deciding which fuel assembly to load, so the decision tree is limited to only the incorrect fuel assemblies. An HH fuel assembly is loaded into a LH package (any of the 21 PWRs), but the error is identified and corrected through successful verification.
4T	The operator made a mental error deciding which fuel assembly to load, so the decision tree is limited to only the incorrect fuel assemblies. An HH fuel assembly is loaded into a LH package (any of the 21 PWRs), but the error is not identified or corrected through verification, creating a possible thermal consequence due to misloading. No credit is given for recovery as fuel assemblies are continued to be loaded.
5T	Errors with ST fuel assemblies (i.e., misloading a long ST assembly into a short waste package) are always corrected through verification.
6T/6Ta 7T/7Ta	The operator makes a fuel assembly selection error. The operator can select from all of the available fuel assembly types, including the type that was originally intended. The operator has selected a fuel assembly of the same type intended for this waste package. Therefore, with or without successful verification, there is no thermal consequence due to misloading, however, without successful verification, the fuel assembly records are likely to be corrupted.
8T/8Ta	The operator makes a fuel assembly selection error. Operator can select from all of the available fuel assembly types, including the type that was originally intended. The operator has selected a HH fuel assembly that is loaded into a LH package (any of the 21 PWRs), but the error is identified and corrected through successful verification.
9T/9Ta	The operator makes a fuel assembly selection error. Operator can select from all of the available fuel assembly types, including the type that was originally intended. The operator has selected a HH fuel assembly that is loaded into a LH package (any of the 21 PWRs), but the error is not identified or corrected through verification, creating a possible thermal consequence due to misloading.
10T	Errors with ST fuel assemblies (i.e., misloading a long ST assembly into a short waste package) are always corrected through verification.
11T, 12T 13T, 14T	For thermal consequences, the operator has selected the wrong waste package (a 12 PWR rather than a 21 PWR). Since the 12 PWR waste packages have a greater thermal rating than the intended 21 PWRs, regardless of which fuel assembly is misloaded (for any of the human error reasons), there is no chance of a thermal consequence. However, unless corrected through successful verification (i.e., 13T), the fuel assembly records are likely to be corrupted and an economic impact may occur (i.e. 14T).
15T	For thermal consequences, the operator performed every task correctly. That is, one of the 12 PWR waste packages was selected for a high heat fuel assembly. (Criticality consequences are considered in another decision tree.)

Endstate	Endstate Notes for PWR Thermal Consequence Decision Tree
16T	For thermal consequences, the operator performed every task correctly, except the final verification. Therefore, there is no thermal consequence due to misloading, however, the fuel assembly records are likely to be corrupted.
17T	The operator has loaded (either by a concept or selection error) the wrong fuel assembly (into the unintended waste package). The error is identified and corrected through successful verification.
18T	The operator has loaded (either by a concept or selection error) the wrong fuel assembly (into the unintended waste package). The error is not identified or corrected through verification. However, there is no thermal consequence, since if the wrong WP is selected, it must be a 12 PWR, which can handle the thermal load of *any* fuel assembly, regardless of the type of human error that cause it to be misloaded. Nonetheless, the fuel assembly records are likely to be corrupted and an economic impact may occur.
19T	For thermal consequences, the operator has selected the wrong waste package (a 21 PWR rather than a 12 PWR). If the operator loads the intended fuel assembly (i.e., high heat), the waste package will not be able to handle the thermal load. In this sequence, the error is identified and corrected through successful verification.
20T	For thermal consequences, the operator has selected the wrong waste package (a 21 PWR rather than a 12 PWR). If the operator loads the intended fuel assembly (i.e., high heat), the waste package will not be able to handle the thermal load. In this sequence, the error is not identified or corrected through verification, creating a possible thermal consequence.
21T	For thermal consequences, the operator has selected the wrong waste package (a 21 PWR rather than a 12 PWR). If the operator misloaded low heat fuel assembly (either due to a concept or selection error), the erroneously selected 21 PWR could handle the heat load. In this sequence, the error is identified and corrected through successful verification.
22T	For thermal consequences, the operator has selected the wrong waste package (a 21 PWR rather than a 12 PWR). If the operator misloaded low heat fuel assembly (either due to a concept or selection error), the erroneously selected 21 PWR could handle the heat load. In this sequence, the error is not identified or corrected through verification, and the fuel assembly records are likely to be corrupted.
23T	For thermal consequences, the operator has selected the wrong waste package (a 21 PWR rather than a 12 PWR). If the operator misloaded ST fuel assembly (either due to a concept or selection error), since it is an oversized ST assembly, the error is identified and corrected through successful verification.
24T	For thermal consequences, the operator performed every task correctly. That is, one of the 12 PWR/ST waste packages was selected for a high heat/ST fuel assembly. (Criticality consequences are considered in another decision tree.)
25T	For thermal consequences, the operator performed every task correctly, except the final verification. Therefore, there is no thermal consequence due to misloading, however, the fuel assembly records are likely to be corrupted.
26T	Errors with ST waste package (i.e., misloading a short assembly into a long waste package) are always corrected through verification.
27T	Errors with ST fuel assemblies (i.e., misloading a long ST assembly into a short waste package) are always corrected through verification.

Endstate	Endstate Notes for PWR Thermal Consequence Decision Tree
28T	For thermal consequences, the operator has selected the wrong waste package (a 21 PWR rather than a 12 PWR/ST). The operator misloaded a low heat fuel assembly (either due to a concept or selection error). In this sequence, the error is identified and corrected through successful verification.
29T	For thermal consequences, the operator has selected the wrong waste package (a 21 PWR rather than a 12 PWR/ST). The operator misloaded a low heat fuel assembly (either due to a concept or selection error). In this sequence, the error is not identified or corrected through verification. The waste package can handle the thermal load of the fuel assembly, so no thermal consequence is created, however, the fuel assembly records are likely to be corrupted.
30T	For thermal consequences, the operator has selected the wrong waste package (a 21 PWR rather than a 12 PWR/ST). The operator misloaded a high heat fuel assembly (either due to a concept or selection error). In this sequence, the error is identified and corrected through successful verification.
31T	For thermal consequences, the operator has selected the wrong waste package (a 21 PWR rather than a 12 PWR/ST). The operator misloaded a high heat fuel assembly (either due to a concept or selection error). In this sequence, the error is not identified or corrected through verification. The waste package can not handle the thermal load of the fuel assembly, creating a possible thermal consequence due to misloading.

Table 5
Endstate Notes for PWR Criticality Consequence Decision Tree

Endstate	Endstate Notes for PWR Criticality Consequence Decision Tree
1C	For criticality consequences, the operator performed every task correctly. That is, one of the *no-absorber* waste packages was selected for a low reactivity fuel assembly. (Thermal consequences are considered in another decision tree.)
2C	For criticality consequences, the operator performed every task correctly, except the final verification. Therefore, there is no criticality consequence due to misloading, however, the fuel assembly records are likely to be corrupted.
3C	The operator made a mental error deciding which fuel assembly to load, so the decision tree is limited to only incorrect fuel assemblies (i.e., with k_∞ greater than one). A medium k_∞ ($1.00 < k_\infty < 1.13$) fuel assembly is loaded into a waste package with no absorber plates, but the error is identified and corrected through successful verification.
4C	The operator made a mental error deciding which fuel assembly to load, so the decision tree is limited to only incorrect fuel assemblies (i.e., with k_∞ greater than one). A medium k_∞ ($1.00 < k_\infty < 1.13$) fuel assembly is loaded into a waste package with no absorber plates, but the error is not identified or corrected through verification, creating a possible criticality consequence due to misloading. No credit is given for recovery as fuel assemblies are continued to be loaded.
5C	Errors with rod assemblyded fuel assemblies (i.e., misloading a rod assemblyded assembly into a *no-absorber* waste package) are always corrected through verification.
6C/6Ca 7C/7Ca	The operator makes a fuel assembly selection error. The operator can select from all of the available fuel assembly types, with any of the possible k_∞ values, including the type that was originally intended. The operator has selected a fuel assembly of the same type intended for this waste package. Therefore, with or without successful verification, there is no criticality consequence due to misloading, however, without successful verification, the fuel assembly records are likely to be corrupted.
8C/8Ca	The operator makes a fuel assembly selection error. The operator can select from all of the available fuel assembly types, with any of the possible k_∞ values, including the type that was originally intended. The operator has selected a mid-range k_∞ fuel assembly, but the error is identified and corrected through successful verification.
9C/9Ca	The operator makes a fuel assembly selection error. The operator can select from all of the available fuel assembly types, with any of the possible k_∞ values, including the type that was originally intended. The operator has selected a mid-range k_∞ fuel assembly, but the error is not identified or corrected through verification, creating a possible criticality consequence due to misloading.
10C	Errors with rod assemblyded fuel assemblies (i.e., misloading a rod assemblyded assembly into a *no-absorber* waste package) are always corrected through verification.

Endstate	Endstate Notes for PWR Criticality Consequence Decision Tree
11C/ 12C	For criticality consequences, the operator committed a selection error (rather than a concept error, which are not split out on the decision tree) and while the operator has not selected the intended package, the correct type of package (e.g., *no-absorber* package has been selected). Without successful verification, the waste package records are likely to be corrupted. The operator has selected the intended fuel assembly with $k_\infty < 1.0$. Since this package can handle this fuel assembly, there is no criticality consequence due to misloading. In addition, for sequence 12C, verification was not successful, therefore, there is no criticality consequence due to misloading, however, the fuel assembly records are likely to be corrupted.
13C	For criticality consequences, the operator committed a selection error (rather than a concept error, which are not split out on the decision tree) and while the operator has not selected the intended package, the correct type of package (e.g., *no-absorber* package has been selected). Without successful verification, the waste package records are likely to be corrupted. The operator has made a mental error deciding which fuel assembly to load, so the decision tree is limited to only the incorrect fuel assembly choices. A mid-range criticality assembly is loaded into a *no-absorber* package, but the error is identified and corrected through successful verification.
14C	For criticality consequences, the operator committed a selection error (rather than a concept error, which are not split out on the decision tree) and while the operator has not selected the intended package, the correct type of package (e.g., *no-absorber* package has been selected). Without successful verification, the waste package records are likely to be corrupted. The operator has made a mental error deciding which fuel assembly to load, so the decision tree is limited to only the incorrect fuel assembly choices. A mid-range criticality assembly is loaded into a *no-absorber* package, but the error is not identified or corrected through verification, creating a possible criticality consequence due to misloading. No credit is given for recovery as fuel assemblies are continued to be loaded.
15C	For criticality consequences, the operator committed a selection error (rather than a concept error, which are not split out on the decision tree) and while the operator has not selected the intended package, the correct type of package (e.g., *no-absorber* package has been selected). Without successful verification, the waste package records are likely to be corrupted. The operator has made a mental error deciding which fuel assembly to load, so the decision tree is limited to only the incorrect fuel assembly choices. A high-range (rod assemblyded) criticality assembly is loaded into a *no-absorber* package, but errors with rod assemblyded fuel assemblies (i.e., misloading a rod assemblyded assembly into a *no-absorber* waste package) are always corrected through verification.
16C/ 17C	For criticality consequences, the operator committed a selection error (rather than a concept error, which are not split out on the decision tree) and while the operator has not selected the intended package, the correct type of package (e.g., *no-absorber* package has been selected). Without successful verification, the waste package records are likely to be corrupted. The operator has made a fuel assembly selection error. Operator can select from all of the available fuel assembly types, including the type that was originally intended. The operator has selected a fuel assembly of the same type intended for this waste package. Therefore, with or without successful verification, there is no criticality consequence due to misloading, however, without successful verification, the fuel assembly records are likely to be corrupted.

Endstate	Endstate Notes for PWR Criticality Consequence Decision Tree
18C	For criticality consequences, the operator committed a selection error (rather than a concept error, which are not split out on the decision tree) and while the operator has not selected the intended package, the correct type of package (e.g., *no-absorber* package has been selected). Without successful verification, the waste package records are likely to be corrupted. The operator has made a fuel assembly selection error. Operator can select from all of the available fuel assembly types, including the type that was originally intended. A mid-range criticality assembly is loaded into a *no-absorber* package, but the error is identified and corrected through successful verification.
19C	For criticality consequences, the operator committed a selection error (rather than a concept error, which are not split out on the decision tree) and while the operator has not selected the intended package, the correct type of package (e.g., *no-absorber* package has been selected). Without successful verification, the waste package records are likely to be corrupted. The operator has made a fuel assembly selection error. Operator can select from all of the available fuel assembly types, including the type that was originally intended. A mid-range criticality assembly is loaded into a *no-absorber* package, but the error is not identified or corrected through verification, creating a possible criticality consequence due to misloading. No credit is given for recovery as fuel assemblies are continued to be loaded.
20C	For criticality consequences, the operator committed a selection error (rather than a concept error, which are not split out on the decision tree) and while the operator has not selected the intended package, the correct type of package (e.g., *no-absorber* package has been selected). Without successful verification, the waste package records are likely to be corrupted. The operator has made a fuel assembly selection error. Operator can select from all of the available fuel assembly types, including the type that was originally intended. A high-range (rod assemblyded) criticality assembly is loaded into a *no-absorber* package, but errors with rod assemblyded fuel assemblies (i.e., misloading a rod assemblyded assembly into a *no-absorber* waste package) are always corrected through verification.
21C/22C	For criticality consequences, the operator has selected the wrong waste package (a package with absorber plates). Since this package can handle any fuel assembly with a $k_\infty < 1.13$, regardless of which fuel assembly is misloaded (for any of the human error reasons), there is no chance of a criticality consequence. However, unless corrected through successful verification (i.e., 21C), the fuel assembly records are likely to be corrupted and an economic impact may occur (i.e., 22C).
23C	Errors with rod assemblyded fuel assemblies (i.e., misloading a rod assemblyded assembly into a *plate* waste package) are always corrected through verification. Note: for sequences 21C-23C, no fuel assembly human error is considered, since there is no criticality consequences regardless of which fuel assembly is selected for the waste package.
24C	Errors with rod assemblyded fuel assemblies (i.e., misloading a mid-range k_∞ assembly [does not require an absorber rod assembly] into a waste package for which a rod assemblyded assembly is expected) are always corrected through verification.
25C/ 26C	For criticality consequences, the operator has selected the wrong waste package (a package for which a rod assemblyded assembly is expected). Since this package can handle a rod assemblyded fuel assembly (the only type with a $k_\infty > 1.13$), there is no chance of a criticality consequence. However, unless corrected through successful verification (i.e., 25C), the fuel assembly records are likely to be corrupted (i.e., 26C). Note: for sequences 24C-26C, no fuel assembly human error is considered, since there is no criticality consequences regardless of which fuel assembly is selected for the waste package.

Endstate	Endstate Notes for PWR Criticality Consequence Decision Tree
27C	For criticality consequences, the operator has selected the wrong waste package (an ST package). If anything but an ST fuel assembly is loaded into this package, the error will be always be corrected through verification. If an ST fuel assembly is loaded into this package, and verification is not successful (not shown on the decision tree), then there is still no criticality consequence, however, the fuel assembly records are likely to be corrupted.
28C	For criticality consequences, the operator performed every task correctly. That is, one of the *plate-absorber* waste packages was selected for a mid-range reactivity fuel assembly. (Thermal consequences are considered in another decision tree.)
29C	For criticality consequences, the operator performed every task correctly, except the final verification. Therefore, there is no criticality consequence due to misloading, however, the fuel assembly records are likely to be corrupted.
30C/31C	The operator misloads a fuel assembly due to either a concept or selection; since there are no criticality consequences in this portion of the tree, no distinction is made between the type of human error. The operator can select from all of the available fuel assembly types, with any of the possible k_∞ values, including the type that was originally intended. The operator has selected a low-range k_∞ fuel assembly for a *plate-absorber* package. Therefore, with or without successful verification, there is no criticality consequence due to misloading, however, without successful verification, the fuel assembly records are likely to be corrupted.
32C/33C	The operator misloads a fuel assembly due to either a concept or selection; since there are no criticality consequences in this portion of the tree, no distinction is made between the type of human error. The operator can select from all of the available fuel assembly types, with any of the possible k_∞ values, including the type that was originally intended. The operator has selected a mid-range k_∞ fuel assembly for a *plate-absorber* package. The operator has selected a fuel assembly of the same type intended for this waste package. Therefore, with or without successful verification, there is no criticality consequence due to misloading, however, without successful verification, the fuel assembly records are likely to be corrupted.
34C	Errors with rod assemblyded fuel assemblies (i.e., misloading a rod assemblyded assembly into a *plate-absorber* waste package) are always corrected through verification.
35C	For criticality consequences, the operator committed a selection error (rather than a concept error, which are not split out on the decision tree) and the operator has selected the wrong waste package (a *no-absorber* package). Without successful verification, the waste package records are likely to be corrupted. A mid-range criticality assembly is loaded into a *no-absorber* package, but the error is identified and corrected through successful verification.
36C	For criticality consequences, the operator committed a selection error (rather than a concept error, which are not split out on the decision tree) and the operator has selected the wrong waste package (a *no-absorber* package). Without successful verification, the waste package records are likely to be corrupted. A mid-range criticality assembly is loaded into a *no-absorber* package, but the error is not identified or corrected through verification, creating a possible criticality consequence due to misloading. No credit is given for recovery as fuel assemblies are continued to be loaded.

Endstate	Endstate Notes for PWR Criticality Consequence Decision Tree
37C/38C	For criticality consequences, the operator committed a selection error (rather than a concept error, which are not split out on the decision tree) and the operator has selected the wrong waste package (a *no-absorber* package). Without successful verification, the waste package records are likely to be corrupted. The operator has made a mental error deciding which fuel assembly to load, so the decision tree is limited to only the incorrect fuel assembly choices. The operator has selected the intended fuel assembly with $k_\infty < 1.0$. Since this package can handle this fuel assembly, there is no criticality consequence due to misloading. In addition, for sequence 38C, verification was not successful, therefore, there is no criticality consequence due to misloading, however, the fuel assembly records are likely to be corrupted.
39C	For criticality consequences, the operator committed a selection error (rather than a concept error, which are not split out on the decision tree) and the operator has selected the wrong waste package (a *no-absorber* package). Without successful verification, the waste package records are likely to be corrupted. The operator has made a mental error deciding which fuel assembly to load, so the decision tree is limited to only the incorrect fuel assembly choices. A high-range (rod assemblyded) criticality assembly is loaded into a *no-absorber* package, but errors with rod assemblyded fuel assemblies (i.e., misloading a rod assemblyded assembly into a *no-absorber* waste package) are always corrected through verification.
40C/41C	For criticality consequences, the operator committed a selection error (rather than a concept error, which are not split out on the decision tree) and while the operator has selected the wrong waste package (a *no-absorber* package). Without successful verification, the waste package records are likely to be corrupted. The operator has made a fuel assembly selection error. Operator can select from all of the available fuel assembly types, including the type that was originally intended. The operator has selected a fuel assembly of the same type intended for this waste package. Therefore, with or without successful verification, there is no criticality consequence due to misloading, however, without successful verification, the fuel assembly records are likely to be corrupted.
42C	For criticality consequences, the operator committed a selection error (rather than a concept error, which are not split out on the decision tree) and while the operator has selected the wrong waste package (a *no-absorber* package). Without successful verification, the waste package records are likely to be corrupted. The operator has made a fuel assembly selection error. Operator can select from all of the available fuel assembly types, including the type that was originally intended. A mid-range criticality assembly is loaded into a *no-absorber* package, but the error is identified and corrected through successful verification.
43C	For criticality consequences, the operator committed a selection error (rather than a concept error, which are not split out on the decision tree) and while the operator has selected the wrong waste package (a *no-absorber* package). Without successful verification, the waste package records are likely to be corrupted. The operator has made a fuel assembly selection error. Operator can select from all of the available fuel assembly types, including the type that was originally intended. A mid-range criticality assembly is loaded into a *no-absorber* package, but the error is not identified or corrected through verification, creating a possible criticality consequence due to misloading. No credit is given for recovery as fuel assemblies are continued to be loaded.

Endstate	Endstate Notes for PWR Criticality Consequence Decision Tree
44C	For criticality consequences, the operator committed a selection error (rather than a concept error, which are not split out on the decision tree) and while the operator has selected the wrong waste package (a *no-absorber* package). Without successful verification, the waste package records are likely to be corrupted. The operator has made a fuel assembly selection error. Operator can select from all of the available fuel assembly types, including the type that was originally intended. A high-range (rod assemblyded) criticality assembly is loaded into a *no-absorber* package, but errors with rod assemblyded fuel assemblies (i.e., misloading a rod assemblyded assembly into a *no-absorber* waste package) are always corrected through verification.
45C	Errors with rod assemblyded fuel assemblies (i.e., misloading a mid-range k_∞ assembly [does not require an absorber rod assembly] into a waste package for which a rod assemblyded assembly is expected) are always corrected through verification.
46C/47C	For criticality consequences, the operator has selected the wrong waste package (a package for which a rod assemblyded assembly is expected). Since this package can handle a rod assemblyded fuel assembly (the only type with a $k_\infty > 1.13$), there is no chance of a criticality consequence. However, unless corrected through successful verification (i.e., 46C), the fuel assembly records are likely to be corrupted (i.e., 47C). Note: for sequences 45C-47C, no fuel assembly human error is considered, since there is no criticality consequences regardless of which fuel assembly is selected for the waste package.
48C	For criticality consequences, the operator has selected the wrong waste package (an ST package). If anything but an ST fuel assembly is loaded into this package, the error will be always be corrected through verification. If an ST fuel assembly is loaded into this package, and verification is not successful (not shown on the decision tree), then there is still no criticality consequence, however, the fuel assembly records are likely to be corrupted.
49C	For criticality consequences, the operator performed every task correctly. That is, one of the *plate-absorber* waste packages was selected for a mid-range reactivity fuel assembly. (Thermal consequences are considered in another decision tree.)
50C	For criticality consequences, the operator performed every task correctly, except the final verification. Therefore, there is no criticality consequence due to misloading, however, the fuel assembly records are likely to be corrupted.
51C	For criticality consequences, the operator has selected any non-rod assemblyded assembly to load into a waste package designed for a rod assemblyded assembly. Upon verification, the error will be immediately identified (fuel assembly too deep in waste package) and corrected.
52C	For criticality consequences, the operator committed a selection error (rather than a concept error, which are not split out on the decision tree) and the operator has selected the wrong waste package (a *no-absorber* package). Without successful verification, the waste package records are likely to be corrupted. Errors with rod assemblyded fuel assemblies (i.e., misloading a rod assemblyded assembly into a *no-absorber* waste package) are always corrected through verification.

Endstate	Endstate Notes for PWR Criticality Consequence Decision Tree
53C/54C	For criticality consequences, the operator committed a selection error (rather than a concept error, which are not split out on the decision tree) and the operator has selected the wrong waste package (a *no-absorber* package). Without successful verification, the waste package records are likely to be corrupted. The operator has made a mental error deciding which fuel assembly to load, so the decision tree is limited to only the incorrect fuel assembly choices. The operator has selected a fuel assembly with $k_\infty < 1.0$. Since this package can handle this fuel assembly, there is no criticality consequence due to misloading. In addition, for sequence 54C, verification was not successful, therefore, there is no criticality consequence due to misloading, however, the fuel assembly records are likely to be corrupted.
55C	For criticality consequences, the operator committed a selection error (rather than a concept error, which are not split out on the decision tree) and the operator has selected the wrong waste package (a *no-absorber* package). Without successful verification, the waste package records are likely to be corrupted. A mid-range criticality assembly is loaded into a *no-absorber* package, but the error is identified and corrected through successful verification.
56C	For criticality consequences, the operator committed a selection error (rather than a concept error, which are not split out on the decision tree) and the operator has selected the wrong waste package (a *no-absorber* package). Without successful verification, the waste package records are likely to be corrupted. A mid-range criticality assembly is loaded into a *no-absorber* package, but the error is not identified or corrected through verification, creating a possible criticality consequence due to misloading. No credit is given for recovery as fuel assemblies are continued to be loaded.
57C/58C	For criticality consequences, the operator committed a selection error (rather than a concept error, which are not split out on the decision tree) and while the operator has selected the wrong waste package (a *no-absorber* package). Without successful verification, the waste package records are likely to be corrupted. The operator has made a fuel assembly selection error. Operator can select from all of the available fuel assembly types, including the type that was originally intended. The operator has selected a fuel assembly with $k_\infty < 1.0$. Since this package can handle this fuel assembly, there is no criticality consequence due to misloading. In addition, for sequence 58C, verification was not successful, therefore, there is no criticality consequence due to misloading, however, the fuel assembly records are likely to be corrupted.
59C	For criticality consequences, the operator committed a selection error (rather than a concept error, which are not split out on the decision tree) and while the operator has selected the wrong waste package (a *no-absorber* package). Without successful verification, the waste package records are likely to be corrupted. The operator has made a fuel assembly selection error. Operator can select from all of the available fuel assembly types, including the type that was originally intended. A mid-range criticality assembly is loaded into a *no-absorber* package, but the error is identified and corrected through successful verification.

Endstate	Endstate Notes for PWR Criticality Consequence Decision Tree
60C	For criticality consequences, the operator committed a selection error (rather than a concept error, which are not split out on the decision tree) and while the operator has selected the wrong waste package (a *no-absorber* package). Without successful verification, the waste package records are likely to be corrupted. The operator has made a fuel assembly selection error. Operator can select from all of the available fuel assembly types, including the type that was originally intended. A mid-range criticality assembly is loaded into a *no-absorber* package, but the error is not identified or corrected through verification, creating a possible criticality consequence due to misloading. No credit is given for recovery as fuel assemblies are continued to be loaded.
61C	For criticality consequences, the operator committed a selection error (rather than a concept error, which are not split out on the decision tree) and while the operator has selected the wrong waste package (a *no-absorber* package). Without successful verification, the waste package records are likely to be corrupted. The operator has made a fuel assembly selection error. Operator can select from all of the available fuel assembly types, including the type that was originally intended. A high-range (rod assemblyded) criticality assembly is loaded into a *no-absorber* package, but errors with rod assemblyded fuel assemblies (i.e., misloading a rod assemblyded assembly into a *no-absorber* waste package) are always corrected through verification.
62C/63C	For criticality consequences, the operator committed a selection error (rather than a concept error, which are not split out on the decision tree) and while the operator has selected the wrong waste package (a *plate-absorber* package). Without successful verification, the waste package records are likely to be corrupted. The operator has made a fuel assembly selection error. Operator can select from all of the available fuel assembly types, including the type that was originally intended. A low- to mid-range k_∞ fuel assembly is loaded into a *plate-absorber* package. Therefore, with or without successful verification, there is no criticality consequence due to misloading, however, without successful verification, the fuel assembly records are likely to be corrupted.
64C	For criticality consequences, the operator committed a selection error (rather than a concept error, which are not split out on the decision tree) and while the operator has selected the wrong waste package (a *plate-absorber* package). Without successful verification, the waste package records are likely to be corrupted. The operator has made a fuel assembly selection error. Operator can select from all of the available fuel assembly types, including the type that was originally intended. A high-range (rod assemblyded) criticality assembly is loaded into a *plate-absorber* package, but errors with rod assemblyded fuel assemblies (i.e., misloading a rod assemblyded assembly into a *plate-absorber* waste package) are always corrected through verification.
65C	For criticality consequences, the operator has selected the wrong waste package (an ST package). If anything but an ST fuel assembly is loaded into this package, the error will be always be corrected through verification. If an ST fuel assembly is loaded into this package, and verification is not successful (not shown on the decision tree), then there is still no criticality consequence, however, the fuel assembly records are likely to be corrupted.

Table 6
Endstate Notes for BWR Thermal Consequence Decision Tree

Endstate	Endstate Notes for BWR Thermal Consequence Decision Tree
1T	For thermal consequences, the operator performed every task correctly. That is, one of the 44 BWR waste packages was selected for a low heat fuel assembly. (Criticality consequences are considered in another decision tree.)
2T	For thermal consequences, the operator performed every task correctly, except the final verification. Therefore, there is no thermal consequence due to misloading, however, the fuel assembly records are likely to be corrupted.
3T	The operator made a mental error deciding which fuel assembly to load, so the decision tree is limited to only the incorrect fuel assemblies (i.e., only a HH assembly). A HH fuel assembly is loaded into a LH package (any of the 44 BWRs), but the error is identified and corrected through successful verification.
4T	The operator made a mental error deciding which fuel assembly to load, so the decision tree is limited to only the incorrect fuel assemblies (i.e., only a HH assembly). An HH fuel assembly is loaded into a LH package (any of the 44 BWRs), but the error is not identified or corrected through verification, creating a possible thermal consequence due to misloading. No credit is given for recovery as fuel assemblies are continued to be loaded.
5T/5Ta 6T/6Ta	The operator makes a fuel assembly selection error. The operator can select from all of the available fuel assembly types, including the type that was originally intended. The operator has selected a fuel assembly of the same type intended for this waste package. Therefore, with or without successful verification, there is no thermal consequence due to misloading, however, without successful verification, the fuel assembly records are likely to be corrupted.
7T/7Ta	The operator makes a fuel assembly selection error. Operator can select from all of the available fuel assembly types, including the type that was originally intended. The operator has selected a HH fuel assembly that is loaded into a LH package (any of the 44 BWRs), but the error is identified and corrected through successful verification.
8T/8Ta	The operator makes a fuel assembly selection error. Operator can select from all of the available fuel assembly types, including the type that was originally intended. The operator has selected a HH fuel assembly that is loaded into a LH package (any of the 44 BWRs), but the error is not identified or corrected through verification, creating a possible thermal consequence due to misloading.
9T/ 10T 11T/12T	For thermal consequences, the operator has selected the wrong waste package (a 24 BWR rather than a 44 BWR). Since the 24 BWR waste packages have a greater thermal rating than the intended 44 BWRs, regardless of which fuel assembly is misloaded (for any of the human error reasons), there is no chance of a thermal consequence. However, unless corrected through successful verification (i.e., 9T), the fuel assembly records are likely to be corrupted and an economic impact may occur (i.e. 10T).
13T	For thermal consequences, the operator performed every task correctly. That is, one of the 44 BWR waste packages was selected for a high heat fuel assembly. (Criticality consequences are considered in another decision tree.)
14T	For thermal consequences, the operator performed every task correctly, except the final verification. Therefore, there is no thermal consequence due to misloading, however, the fuel assembly records are likely to be corrupted.
15T	The operator has loaded (either by a concept or selection error) the wrong fuel assembly (into the unintended waste package). The error is identified and corrected through successful verification.

Endstate	Endstate Notes for BWR Thermal Consequence Decision Tree
16T	The operator has loaded (either by a concept or selection error) the wrong fuel assembly (into the unintended waste package). The error is not identified or corrected through verification. However, there is no thermal consequence, since if the wrong WP is selected, it must be a 24 BWR, which can handle the thermal load of *any* fuel assembly, regardless of the type of human error that cause it to be misloaded. Nonetheless, the fuel assembly records are likely to be corrupted and an economic impact may occur.
17T	For thermal consequences, the operator has selected the wrong waste package (a 44 BWR rather than a 24 BWR). If the operator loads the intended fuel assembly (i.e., high heat), the waste package will not be able to handle the thermal load. In this sequence, the error is identified and corrected through successful verification.
18T	For thermal consequences, the operator has selected the wrong waste package (a 44 BWR rather than a 24 BWR). If the operator loads the intended fuel assembly (i.e., high heat), the waste package will not be able to handle the thermal load. In this sequence, the error is not identified or corrected through verification, creating a possible thermal consequence.
19T	For thermal consequences, the operator has selected the wrong waste package (a 44 BWR rather than a 24 BWR). If the operator misloaded low heat fuel assembly (either due to a concept or selection error), the erroneously selected 44 BWR could handle the heat load. In this sequence, the error is identified and corrected through successful verification. If verification was not successful (not shown on the tree), the fuel assembly records are likely to be corrupted.

Table 7
Endstate Notes for BWR Criticality Consequence Decision Tree

Endstate	Endstate Notes for BWR Criticality Consequence Decision Tree
1C	For criticality consequences, the operator performed every task correctly. That is, one of the *no-absorber* waste packages was selected for a low reactivity fuel assembly. (Thermal consequences are considered in another decision tree.)
2C	For criticality consequences, the operator performed every task correctly, except the final verification. Therefore, there is no criticality consequence due to misloading, however, the fuel assembly records are likely to be corrupted.
3C/5C	The operator made a mental error deciding which fuel assembly to load, so the decision tree is limited to only incorrect fuel assemblies (i.e., with k_∞ greater than one). A medium k_∞ ($1.00 < k_\infty < 1.37$) or high k_∞ ($k_\infty > 1.37$) fuel assembly is loaded into a waste package with no absorber plates, but the error is identified and corrected through successful verification.
4C/C6	The operator made a mental error deciding which fuel assembly to load, so the decision tree is limited to only incorrect fuel assemblies (i.e., with k_∞ greater than one). A medium k_∞ ($1.00 < k_\infty < 1.37$) or high k_∞ ($k_\infty > 1.37$) fuel assembly is loaded into a waste package with no absorber plates, but the error is not identified or corrected through verification, creating a possible criticality consequence due to misloading. No credit is given for recovery as fuel assemblies are continued to be loaded.
7C/7Ca 8C/8Ca	The operator makes a fuel assembly selection error. The operator can select from all of the available fuel assembly types, with any of the possible k_∞ values, including the type that was originally intended. The operator has selected a fuel assembly of the same type intended for this waste package. Therefore, with or without successful verification, there is no criticality consequence due to misloading, however, without successful verification, the fuel assembly records are likely to be corrupted.
9C/9Ca 11C/11Ca	The operator makes a fuel assembly selection error. The operator can select from all of the available fuel assembly types, with any of the possible k_∞ values, including the type that was originally intended. The operator has selected a mid-range or high-range k_∞ fuel assembly, but the error is identified and corrected through successful verification.
10C/10Ca 12C/12Ca	The operator makes a fuel assembly selection error. The operator can select from all of the available fuel assembly types, with any of the possible k_∞ values, including the type that was originally intended. The operator has selected a mid-range or high-range k_∞ fuel assembly, but the error is not identified or corrected through verification, creating a possible criticality consequence due to misloading.
13C/14C	For criticality consequences, the operator committed a selection error (rather than a concept error, which are not split out on the decision tree) and while the operator has not selected the intended package, the correct type of package (e.g., *no-absorber* package has been selected). Without successful verification, the waste package records are likely to be corrupted. The operator has selected the intended fuel assembly with $k_\infty < 1.0$. Since this package can handle this fuel assembly, there is no criticality consequence due to misloading. In addition, for sequence 14C, verification was not successful, therefore, there is no criticality consequence due to misloading, however, the fuel assembly records are likely to be corrupted.

Endstate	Endstate Notes for BWR Criticality Consequence Decision Tree
15C/17C	For criticality consequences, the operator committed a selection error (rather than a concept error, which are not split out on the decision tree) and while the operator has not selected the intended package, the correct type of package (e.g., *no-absorber* package has been selected). Without successful verification, the waste package records are likely to be corrupted. The operator has made a mental error deciding which fuel assembly to load, so the decision tree is limited to only the incorrect fuel assembly choices. A mid-range or high-range criticality assembly is loaded into a *no-absorber* package, but the error is identified and corrected through successful verification.
16C/18C	For criticality consequences, the operator committed a selection error (rather than a concept error, which are not split out on the decision tree) and while the operator has not selected the intended package, the correct type of package (e.g., *no-absorber* package has been selected). Without successful verification, the waste package records are likely to be corrupted. The operator has made a mental error deciding which fuel assembly to load, so the decision tree is limited to only the incorrect fuel assembly choices. A mid-range or high-range criticality assembly is loaded into a *no-absorber* package, but the error is not identified or corrected through verification, creating a possible criticality consequence due to misloading. No credit is given for recovery as fuel assemblies are continued to be loaded.
19C/20C	For criticality consequences, the operator committed a selection error (rather than a concept error, which are not split out on the decision tree) and while the operator has not selected the intended package, the correct type of package (e.g., *no-absorber* package has been selected). Without successful verification, the waste package records are likely to be corrupted. The operator has made a fuel assembly selection error. Operator can select from all of the available fuel assembly types, including the type that was originally intended. The operator has selected a fuel assembly of the same type intended for this waste package. Therefore, with or without successful verification, there is no criticality consequence due to misloading, however, without successful verification, the fuel assembly records are likely to be corrupted.
21C/23C	For criticality consequences, the operator committed a selection error (rather than a concept error, which are not split out on the decision tree) and while the operator has not selected the intended package, the correct type of package (e.g., *no-absorber* package has been selected). Without successful verification, the waste package records are likely to be corrupted. The operator has made a fuel assembly selection error. Operator can select from all of the available fuel assembly types, including the type that was originally intended. A mid-range or high range criticality assembly is loaded into a *no-absorber* package, but the error is identified and corrected through successful verification.
22C/22Ca 24C/24Ca	For criticality consequences, the operator committed a selection error (rather than a concept error, which are not split out on the decision tree) and while the operator has not selected the intended package, the correct type of package (e.g., *no-absorber* package has been selected). Without successful verification, the waste package records are likely to be corrupted. The operator has made a fuel assembly selection error. Operator can select from all of the available fuel assembly types, including the type that was originally intended. A mid-range or high range criticality assembly is loaded into a *no-absorber* package, but the error is not identified or corrected through verification, creating a possible criticality consequence due to misloading. No credit is given for recovery as fuel assemblies are continued to be loaded.

Endstate	Endstate Notes for BWR Criticality Consequence Decision Tree
25C/26C	For criticality consequences, the operator committed a selection error (rather than a concept error, which are not split out on the decision tree) and while the operator has not selected the intended package, the correct type of package (e.g., *plate-absorber* package has been selected). Since this package can handle any fuel assembly with a k_∞ < 1.37, regardless of which fuel assembly is misloaded (for any of the human error reasons), there is no chance of a criticality consequence. However, unless corrected through successful verification (i.e., 25C), the fuel assembly records are likely to be corrupted and an economic impact may occur (i.e., 26C).
27C	For criticality consequences, the operator committed a selection error (rather than a concept error, which are not split out on the decision tree) and the operator has selected a *plate-absorber* package. Without successful verification, the waste package records are likely to be corrupted. The operator has made a fuel assembly selection error. Operator can select from all of the available fuel assembly types, including the type that was originally intended. A high range criticality assembly is loaded into a *plate-absorber* package, but the error is identified and corrected through successful verification.
28C	For criticality consequences, the operator committed a selection error (rather than a concept error, which are not split out on the decision tree) and the operator has selected a *plate-absorber* package. Without successful verification, the waste package records are likely to be corrupted. The operator has made a fuel assembly selection error. Operator can select from all of the available fuel assembly types, including the type that was originally intended. A high range criticality assembly is loaded into a *plate-absorber* package, but the error is not identified or corrected through verification, creating a possible criticality consequence due to misloading. No credit is given for recovery as fuel assemblies are continued to be loaded.
29C/ 30C	For criticality consequences, the operator has selected the wrong waste package (a package for which thick absorber plates are used). Since this package can handle any fuel assembly, there is no chance of a criticality consequence. However, unless corrected through successful verification (i.e., 29C), the fuel assembly records are likely to be corrupted (i.e., 30C).
31C	For criticality consequences, the operator performed every task correctly. That is, one of the *plate-absorber* waste packages was selected for a mid-range reactivity fuel assembly. (Thermal consequences are considered in another decision tree.)
32C	For criticality consequences, the operator performed every task correctly, except the final verification. Therefore, there is no criticality consequence due to misloading, however, the fuel assembly records are likely to be corrupted.
33C/34C	The operator misloads a fuel assembly due to either a concept or selection; since there are no criticality consequences in this portion of the tree, no distinction is made between the type of human error. The operator can select from all of the available fuel assembly types, with any of the possible k_∞ values, including the type that was originally intended. The operator has selected a low-range k_∞ fuel assembly for a *plate-absorber* package. Therefore, with or without successful verification, there is no criticality consequence due to misloading, however, without successful verification, the fuel assembly records are likely to be corrupted.

Endstate	Endstate Notes for BWR Criticality Consequence Decision Tree
35C/36C	The operator misloads a fuel assembly due to either a concept or selection; since there are no criticality consequences in this portion of the tree, no distinction is made between the type of human error. The operator can select from all of the available fuel assembly types, with any of the possible k_∞ values, including the type that was originally intended. The operator has selected a mid-range k_∞ fuel assembly for a *plate-absorber* package. The operator has selected a fuel assembly of the same type intended for this waste package. Therefore, with or without successful verification, there is no criticality consequence due to misloading, however, without successful verification, the fuel assembly records are likely to be corrupted.
37C	The operator makes a fuel assembly selection error. The operator can select from all of the available fuel assembly types, with any of the possible k_∞ values, including the type that was originally intended. The operator has selected a high-range k_∞ fuel assembly, but the error is identified and corrected through successful verification.
38C	The operator makes a fuel assembly selection error. The operator can select from all of the available fuel assembly types, with any of the possible k_∞ values, including the type that was originally intended. The operator has selected a high-range k_∞ fuel assembly, but the error is not identified or corrected through verification, creating a possible criticality consequence due to misloading.
39C	For criticality consequences, the operator committed a selection error (rather than a concept error, which are not split out on the decision tree) and the operator has selected the wrong waste package (a *no-absorber* package). Without successful verification, the waste package records are likely to be corrupted. A mid-range criticality assembly is loaded into a *no-absorber* package, but the error is identified and corrected through verification.
40C	For criticality consequences, the operator committed a selection error (rather than a concept error, which are not split out on the decision tree) and the operator has selected the wrong waste package (a *no-absorber* package). Without successful verification, the waste package records are likely to be corrupted. A mid-range criticality assembly is loaded into a *no-absorber* package, but the error is not identified or corrected through verification, creating a possible criticality consequence due to misloading. No credit is given for recovery as fuel assemblies are continued to be loaded.
41C/42C	For criticality consequences, the operator committed a selection error (rather than a concept error, which are not split out on the decision tree) and the operator has selected the wrong waste package (a *no-absorber* package). Without successful verification, the waste package records are likely to be corrupted. The operator has made a mental error deciding which fuel assembly to load, so the decision tree is limited to only the incorrect fuel assembly choices. The operator has selected the intended fuel assembly with $k_\infty < 1.0$. Since this package can handle this fuel assembly, there is no criticality consequence due to misloading. In addition, for sequence 42C, verification was not successful, therefore, there is no criticality consequence due to misloading, however, the fuel assembly records are likely to be corrupted.
43C	For criticality consequences, the operator committed a selection error (rather than a concept error, which are not split out on the decision tree) and the operator has selected the wrong waste package (a *no-absorber* package). Without successful verification, the waste package records are likely to be corrupted. The operator has made a mental error deciding which fuel assembly to load, so the decision tree is limited to only the incorrect fuel assembly choices. A high-range criticality assembly is loaded into a *no-absorber* package, but the error is identified and corrected through successful verification.

Endstate	Endstate Notes for BWR Criticality Consequence Decision Tree
44C	For criticality consequences, the operator committed a selection error (rather than a concept error, which are not split out on the decision tree) and the operator has selected the wrong waste package (a *no-absorber* package). Without successful verification, the waste package records are likely to be corrupted. The operator has made a mental error deciding which fuel assembly to load, so the decision tree is limited to only the incorrect fuel assembly choices. A high-range criticality assembly is loaded into a *no-absorber* package,but the error is not identified or corrected through verification, creating a possible criticality consequence due to misloading. No credit is given for recovery as fuel assemblies are continued to be loaded.
45C/46C	For criticality consequences, the operator committed a selection error (rather than a concept error, which are not split out on the decision tree) and while the operator has selected the wrong waste package (a *no-absorber* package). Without successful verification, the waste package records are likely to be corrupted. The operator has made a fuel assembly selection error. Operator can select from all of the available fuel assembly types, including the type that was originally intended. The operator has selected a fuel assembly of the same type intended for this waste package. Therefore, with or without successful verification, there is no criticality consequence due to misloading, however, without successful verification, the fuel assembly records are likely to be corrupted.
47C/49C	For criticality consequences, the operator committed a selection error (rather than a concept error, which are not split out on the decision tree) and while the operator has selected the wrong waste package (a *no-absorber* package). Without successful verification, the waste package records are likely to be corrupted. The operator has made a fuel assembly selection error. Operator can select from all of the available fuel assembly types, including the type that was originally intended. A mid-range or high-range criticality assembly is loaded into a *no-absorber* package, but the error is identified and corrected through successful verification.
48C/48Ca 50C/50Ca	For criticality consequences, the operator committed a selection error (rather than a concept error, which are not split out on the decision tree) and while the operator has selected the wrong waste package (a *no-absorber* package). Without successful verification, the waste package records are likely to be corrupted. The operator has made a fuel assembly selection error. Operator can select from all of the available fuel assembly types, including the type that was originally intended. A mid-range or high-range criticality assembly is loaded into a *no-absorber* package, but the error is not identified or corrected through verification, creating a possible criticality consequence due to misloading.
51C/52C	For criticality consequences, the operator committed a selection error (rather than a concept error, which are not split out on the decision tree) and while the operator has selected the wrong waste package (a *thick plate-absorber* package). Without successful verification, the waste package records are likely to be corrupted. The operator has made a fuel assembly selection error. Operator can select from all of the available fuel assembly types, including the type that was originally intended. The waste package can handle any of fuel assemblies regardless of what human error occurs. Therefore, with or without successful verification, there is no criticality consequence due to misloading, however, without successful verification, the fuel assembly records are likely to be corrupted.
53C	For criticality consequences, the operator performed every task correctly. That is, one of the *thick plate-absorber* waste packages was selected for a high-range reactivity fuel assembly. (Thermal consequences are considered in another decision tree.)
54C	For criticality consequences, the operator performed every task correctly, except the final verification. Therefore, there is no criticality consequence due to misloading, however, the fuel assembly records are likely to be corrupted.

Endstate	Endstate Notes for BWR Criticality Consequence Decision Tree
55C/56C	For criticality consequences, the operator has selected any low-range or mid-range criticality assembly to load into a waste package designed for high-range assemblies (with thick asborber plates). The package can handle any of the misloaded packages. Therefore, with or without successful verification, there is no criticality consequence due to misloading, however, without successful verification, the fuel assembly records are likely to be corrupted.
57C	For criticality consequences, the operator committed a selection error (rather than a concept error, which are not split out on the decision tree) and the operator has selected the wrong waste package (a *no-absorber* package). Without successful verification, the waste package records are likely to be corrupted. A high-range criticality assembly is loaded into a *no-absorber* package, but the error is identified and corrected through verification.
58C	For criticality consequences, the operator committed a selection error (rather than a concept error, which are not split out on the decision tree) and the operator has selected the wrong waste package (a *no-absorber* package). Without successful verification, the waste package records are likely to be corrupted. A high-range criticality assembly is loaded into a *no-absorber* package, but the error is not identified or corrected through verification, creating a possible criticality consequence due to misloading. No credit is given for recovery as fuel assemblies are continued to be loaded.
59C/60C	For criticality consequences, the operator committed a selection error (rather than a concept error, which are not split out on the decision tree) and the operator has selected the wrong waste package (a *no-absorber* package). Without successful verification, the waste package records are likely to be corrupted. The operator has made a mental error deciding which fuel assembly to load, so the decision tree is limited to only the incorrect fuel assembly choices. The operator has selected a fuel assembly with $k_\infty < 1.0$. Since this package can handle this fuel assembly, there is no criticality consequence due to misloading. In addition, for sequence 60C, verification was not successful, therefore, there is no criticality consequence due to misloading, however, the fuel assembly records are likely to be corrupted.
61C	For criticality consequences, the operator committed a selection error (rather than a concept error, which are not split out on the decision tree) and the operator has selected the wrong waste package (a *no-absorber* package). Without successful verification, the waste package records are likely to be corrupted. A mid-range criticality assembly is loaded into a *no-absorber* package, but the error is identified and corrected through successful verification.
62C	For criticality consequences, the operator committed a selection error (rather than a concept error, which are not split out on the decision tree) and the operator has selected the wrong waste package (a *no-absorber* package). Without successful verification, the waste package records are likely to be corrupted. A mid-range criticality assembly is loaded into a *no-absorber* package, but the error is not identified or corrected through verification, creating a possible criticality consequence due to misloading. No credit is given for recovery as fuel assemblies are continued to be loaded.

Endstate	Endstate Notes for BWR Criticality Consequence Decision Tree
63C/64C	For criticality consequences, the operator committed a selection error (rather than a concept error, which are not split out on the decision tree) and while the operator has selected the wrong waste package (a *no-absorber* package). Without successful verification, the waste package records are likely to be corrupted. The operator has made a fuel assembly selection error. Operator can select from all of the available fuel assembly types, including the type that was originally intended. The operator has selected a fuel assembly with $k_\infty < 1.0$. Since this package can handle this fuel assembly, there is no criticality consequence due to misloading. In addition, for sequence 64C, verification was not successful, therefore, there is no criticality consequence due to misloading, however, the fuel assembly records are likely to be corrupted.
65C/67C	For criticality consequences, the operator committed a selection error (rather than a concept error, which are not split out on the decision tree) and while the operator has selected the wrong waste package (a *no-absorber* package). Without successful verification, the waste package records are likely to be corrupted. The operator has made a fuel assembly selection error. Operator can select from all of the available fuel assembly types, including the type that was originally intended. A mid-range or high-range criticality assembly is loaded into a *no-absorber* package, but the error is identified and corrected through successful verification.
66C/66Ca 68C/68Ca	For criticality consequences, the operator committed a selection error (rather than a concept error, which are not split out on the decision tree) and while the operator has selected the wrong waste package (a *no-absorber* package). Without successful verification, the waste package records are likely to be corrupted. The operator has made a fuel assembly selection error. Operator can select from all of the available fuel assembly types, including the type that was originally intended. A mid-range or high-range criticality assembly is loaded into a *no-absorber* package, but the error is not identified or corrected through verification, creating a possible criticality consequence due to misloading. No credit is given for recovery as fuel assemblies are continued to be loaded.
69C/70C	For criticality consequences, the operator committed a selection error (rather than a concept error, which are not split out on the decision tree) and while the operator has selected the wrong waste package (a *plate-absorber* package). Without successful verification, the waste package records are likely to be corrupted. The operator has made a fuel assembly selection error. Operator can select from all of the available fuel assembly types, including the type that was originally intended. A low- to mid-range k_∞ fuel assembly is loaded into a *plate-absorber* package. Therefore, with or without successful verification, there is no criticality consequence due to misloading, however, without successful verification, the fuel assembly records are likely to be corrupted.
71C	For criticality consequences, the operator committed a selection error (rather than a concept error, which are not split out on the decision tree) and while the operator has selected the wrong waste package (a *plate-absorber* package). Without successful verification, the waste package records are likely to be corrupted. The operator has made a fuel assembly selection error. Operator can select from all of the available fuel assembly types, including the type that was originally intended. A high-range criticality assembly is loaded into a *plate-absorber* package, but the error is identified and corrected through successful verification.

Endstate	Endstate Notes for BWR Criticality Consequence Decision Tree
72C	For criticality consequences, the operator committed a selection error (rather than a concept error, which are not split out on the decision tree) and while the operator has selected the wrong waste package (a *plate-absorber* package). Without successful verification, the waste package records are likely to be corrupted. The operator has made a fuel assembly selection error. Operator can select from all of the available fuel assembly types, including the type that was originally intended. A high-range criticality assembly is loaded into a *plate-absorber* package, but the error is not identified or corrected through verification, creating a possible criticality consequence due to misloading. No credit is given for recovery as fuel assemblies are continued to be loaded.

Figure 1 - PWR Thermal Consequence Decision Tree

WP Usage	Select WP	Select FA	FA Type	Verification	Endstate Prob./Conseq.		Endstate Identifier
0.945	0.994	0.994		0.990	9.24E-01		1T
(21 PWR)	(intended WP)	(intended FA)		(success)	(no conseq.)		
				0.010	9.34E-03		2T
				(failure)	(no conseq.)		
		0.005	0.866	0.990	4.03E-03		3T
		(concept)	HH	(success)	(no conseq.)		
				0.010	4.07E-05		4T
				(failure)	(thermal)		
			0.134	1.000	6.28E-04		5T
			ST	(success)	(no conseq.)		
		0.001	0.801	0.990	1.56E-02	2.33E-04	6T/6Ta
		(selection)	LH	(success)	(no conseq.)		
				0.010	1.58E-04	2.38E-08	7T/7Ta
				(failure)	(no conseq.)		
			0.172	0.990	3.36E-03	1.08E-05	8T/8Ta
			HH	(success)	(no conseq.)		
				0.010	3.40E-05	1.10E-09	9T/9Ta
				(failure)	(thermal)		
			0.027	1.000	5.25E-04		10T
			ST	(success)	(no conseq.)		
	0.006	0.801		0.990	4.50E-03		11T
	(other WP)	(intended FA)		(success)	(no conseq.)		
				0.010	4.54E-05		12T
				(failure)	(no conseq.)		
		0.199		0.990	1.12E-03		13T
		(wrong FA)		(success)	(no conseq.)		
				0.010	1.13E-05		14T
				(failure)	(no conseq.)		
0.035	0.994	0.994		0.990	3.42E-02		15T
(12 PWR)	(intended WP)	(intended FA)		(success)	(no conseq.)		
				0.010	3.46E-04		16T
				(failure)	(no conseq.)		
		0.006		0.990	2.07E-04		17T
		(wrong FA)		(success)	(no conseq.)		
				0.010	2.09E-06		18T
					(no conseq.)		
	0.006	0.994		0.990	2.07E-04		19T
	(other WP)	(intended FA)		(success)	(no conseq.)		
				0.010	2.09E-06		20T

Figure 1 - PWR Thermal Consequence Decision Tree

				(failure)	(thermal)	
		0.008	0.968	0.990	1.25E-06	21T
		(wrong FA)	LH	(success)	(no conseq.)	
				0.010	1.26E-08	22T
				(failure)	(no conseq.)	
			0.032	1.000	4.05E-08	23T
			ST	(success)	(no conseq.)	
0.020	0.994	0.994		0.990	1.96E-02	24T
(12 PWR/ST)	(intended WP)	(intended FA)		(success)	(no conseq.)	
				0.010	1.98E-04	25T
				(failure)	(no conseq.)	
		0.006		1.000	1.19E-04	26T
		(wrong FA)		(success)	(no conseq.)	
	0.006	0.994		1.000	1.19E-04	27T
	(wrong WP)	(intended FA)		(success)	(no conseq.)	
		0.008	0.823	0.990	5.87E-07	28T
		(wrong FA)	LH	(success)	(no conseq.)	
				0.010	5.93E-09	29T
				failure	(no conseq.)	
			0.177	0.990	1.28E-07	30T
			HH	(success)	(no conseq.)	
				0.010	1.27E-09	31T
				failure	(thermal)	
		Mission Success:				
		One misloaded assembly represents a possible thermal consequence		Two misloaded assemblies represents a possible thermal consequence		
Probability of Misload Leading to a Thermal Conseq. Per Waste Package		7.68E-05		4.28E-05		
PWR WPs per year		201		201		
Probability/Year		1.54E-02		8.60E-03		

Figure 2 - PWR Criticality Consequence Decision Tree

WP Usage	Select WP	Select FA	FA Type	Verification			Endstate	
0.390	0.994	0.994		0.990	3.61E-01		1C	
(no absorber)	(intended WP)	(intended FA)		(success)	(no conseq.)			
				0.010	3.65E-03		2C	
				(failure)	(no conseq.)			
		0.005	0.924	0.990	1.77E-03		3C	
		(concept)	1<k-inf<1.13	(success)	(no conseq.)			
				0.010	1.79E-05		4C	
				(failure)	(criticality)			
			0.076	1.000	1.47E-04		5C	
			k-inf>1.13	(success)	(no conseq.)			
		0.001	0.340	0.990	2.74E-03	7.15E-06	6C/6Ca	
		(selection)	k-inf<1	(success)	(no conseq.)			
				0.010	2.77E-05	7.30E-10	7C/7Ca	
				(failure)	(no conseq.)			
			0.610	0.990	4.92E-03	2.30E-05	8C/8Ca	
			1<k-inf<1.13	(success)	(no conseq.)			
				0.010	4.97E-05	2.35E-09	9C/9Ca	
				(failure)	(criticality)			
			0.050	1.000	4.07E-04		10C	
			k-inf>1.13	(success)	(no conseq.)			
	0.006	0.390	0.994	0.990	8.98E-04		11C	
	(wrong WP)	(no absorber)	(intended FA)	(success)	(no conseq.)			
				0.010	9.07E-06		12C	
				(failure)	(no conseq.)			
			0.005	0.924	0.990	4.18E-06	13C	
			(concept)	1<k-inf<1.13	(success)	(no conseq.)		
					0.010	4.22E-08	14C	
					(failure)	(criticality)		
				0.076	1.000	3.46E-07	15C	
				k-inf>1.13	(success)	(no conseq.)		
			0.001	0.340	0.990	6.45E-06	16C	
			(selection)	k-inf<1.0	(success)	(no conseq.)		
					0.010	6.52E-08	17C	
					(failure)	(no conseq.)		
				0.610	0.990	1.16E-05	18C	
				1<k-inf<1.13	(success)	(no conseq.)		
					0.010	1.17E-07	19C	1.30E-14
					(failure)	(criticality)		
				0.050	1.000	9.58E-07	20C	
				k-inf>1.13	(success)	(no conseq.)		
		0.555	0.950	0.990	1.22E-03		21C	
		(plate)	k-inf<1.13	(success)	(no conseq.)			

Figure 2 - PWR Criticality Consequence Decision Tree

					0.010	1.23E-05		22C
					(failure)	(no conseq.)		
				0.050	1.000	6.49E-05		23C
				(k-inf>1.13		(no conseq)		
			0.035	0.950	1.000	7.78E-05		24C
			(rod)	k-inf<1.13	(success)	(no conseq.)		
				0.050	0.990	4.05E-06		25C
				k-inf>1.13	(success)	(no conseq.)		
					0.010	4.10E-08		
					(failure)	(no conseq.)		26C
			0.020	1.000	1.000	4.68E-05		27C
			(ST)	(any FA)	(success)	(no conseq.)		
0.575	0.994	0.994			0.990	5.82E-01		28C
(plate/ST)	(intended WP)	(intended FA)			(success)	(no conseq.)		
					0.010	5.88E-03		29C
					(failure)	(no conseq.)		
			0.006	0.340	0.990	1.15E-03		30C
			(wrong FA)	k-inf<1.0	(success)	(no conseq.)		
					0.010	1.17E-05		31C
					(failure)	(no conseq.)		
				0.810	0.990	2.07E-03		32C
				1<k-inf<1.13	(success)	(no conseq.)		
					0.010	2.09E-05		33C
					(failure)	(no conseq.)		
				0.050	1.000	1.71E-04		34C
				k-inf>1.13	(success)	(no conseq.)		
	0.006	0.878		0.994	0.990	2.98E-03		35C
	(wrong WP)	(no absorber)		(intended FA)	(success)	(no conseq.)		
					0.010	3.01E-05		36C
					(failure)	(criticality)		
				0.005	0.872	0.990	1.30E-05	37C
				(concept)	k-inf<1	(success)	(no conseq.)	
						0.010	1.32E-07	38C
						(failure)	(no conseq.)	
					0.128	1.000	1.94E-06	39C
					k-inf>1.13	(success)	(no conseq.)	
				0.001	0.340	0.990	2.14E-05	40C
				(selection)	k-inf<1.0	(success)	(no conseq.)	
						0.010	2.16E-07	41C
						(failure)	(no conseq.)	
					0.810	0.990	3.83E-05	42C
					1<k-inf<1.13	(success)	(no conseq.)	
						0.010	3.87E-07	43C 1.43E-13
						(failure)	(criticality)	

Figure 2 - PWR Criticality Consequence Decision Tree

					0.050	1.000	3.17E-06	44C	
					k-inf>1.13	(success)	(no conseq.)		
			0.079	0.950	1.000	2.58E-04		45C	
			(rod)	k-inf<1.13	(success)	(no conseq.)			
				0.050	0.990	1.34E-05		46C	
				k-inf>1.13	(success)	(no conseq.)			
					0.010	1.36E-07			
					(failure)	(no conseq.)		47C	
			0.045	1.000	1.000	1.55E-04		48C	
			(ST)	(any FA)	(success)	(no conseq.)			
	0.035	0.994	0.994		0.990	3.42E-02		49C	
	(rod)	(intended WP)	intended FA		(success)	(no conseq.)			
					0.010	3.46E-04		50C	
					(failure)	(no conseq.)			
			0.006		1.000	2.09E-04		51C	
			(wrong FA)		(success)	(no conseq.)			
		0.006	0.404	0.994	0.990	8.35E-05		52C	
		(wrong WP)	(no absorber)	(intended FA)	(success)	(no conseq.)			
				0.005	0.358	0.990	1.50E-07	53C	
				(concept)	k-inf<1	(success)	(no conseq.)		
						0.010	1.52E-09	54C	
						(failure)	(no conseq.)		
					0.642	0.990	2.70E-07	55C	
					1<k-inf<1.13	(success)	(no conseq.)		
						0.010	2.72E-09	56C	
						(failure)	(criticality)		
				0.001	0.340	0.990	6.00E-07	57C	
				(selection)	k-inf<1.0	(success)	(no conseq.)		
						0.010	6.06E-09	58C	
						(failure)	(no conseq.)		
					0.610	0.990	1.08E-06	59C	
					1<k-inf<1.13	(success)	(no conseq.)		
						0.010	1.09E-08	60C	1.13E-16
						(failure)	(criticality)		
					0.050	1.000	8.91E-08	61C	
					k-inf>1.13	(success)	(no conseq.)		
			0.575	0.950	0.990	1.14E-04		62C	
			(plate)	k-inf<1.13	(success)	(no conseq.)			
					0.010	1.15E-06		63C	
					(failure)	(no conseq.)			
				0.050	1.000	6.04E-06		64C	
				k-inf>1.13	(success)	(no conseq.)			
			0.021	1.000	1.000	4.35E-06		65C	

Figure 2 - PWR Criticality Consequence Decision Tree

			(ST)	(any FA)	(success)	(no conseq.)			
			Mission Success:						
								TOTALS	
			One misloaded assembly		Two misloaded assemblies			Conseptual	4.80E-05
			represents a possible		represents a possible			Select 1	5.02E-05
			criticality consequence		criticality consequence			Select 2	2.35E-09
	Probability of Misload								
	Leading to a Criticality Conseq.			9.82E-05		4.80E-05			
	Per Waste Package								
	PWR WPs per year			201		201			
	Probability/Year			1.97E-02		9.65E-03			

Figure 3 - BWR Thermal Consequence Decision Tree

WP Usage	Select WP	Select FA	FA Type	Verification	Endstate Prob./Conseq.		Endstate Identifier
0.990	0.994	0.994		0.990	9.68E-01		1T
(44 BWR)	(intended WP)	(intended FA)		(success)	(no conseq.)		
				0.010	9.78E-03		2T
				(failure)	(no conseq.)		
		0.005		0.990	0.00E+00		3T
		(concept)	HH	(success)	(no conseq.)		
				0.010	4.92E-05		4T
				(failure)	(thermal)		
		0.001	0.966	0.990	4.14E-02	1.68E-03	5T/5Ta
		(selection)	LH	(success)	(no conseq.)		
				0.010	4.18E-04	1.71E-07	6T/6Ta
				(failure)	(no conseq.)		
			0.034	0.990	1.46E-03	2.10E-06	7T/7Ta
			HH	(success)	(no conseq.)		
				0.010	1.48E-05	2.14E-10	8T/8Ta
				(failure)	(thermal)		
	0.006	0.966		0.990	5.68E-03		9T
	(other WP)	(intended FA)	LH	(success)	(no conseq.)		
				0.010	5.74E-05		10T
				(failure)	(no conseq.)		
		0.034		0.990	2.01E-04		11T
		(wrong FA)	HH	(success)	(no conseq.)		
				0.010	2.03E-06		12T
				(failure)	(no conseq.)		
0.010	0.994	0.994		0.990	9.78E-03		13T
(24 BWR)	(intended WP)	(intended FA)	HH	(success)	(no conseq.)		
				0.010	9.88E-05		14T
				(failure)	(no conseq.)		
		0.006		0.990	5.90E-05		15T
		(wrong FA)	LH	(success)	(no conseq.)		
				0.010	5.96E-07		16T
					(no conseq.)		
	0.006	0.994		0.990	5.90E-05		17T
	(other WP)	(intended FA)	HH	(success)	(no conseq.)		
				0.010	5.96E-07		18T
				(failure)	(thermal)		
		0.006		0.990	3.56E-07		19T
		(wrong FA)	LH	(success)	(no conseq.)		

Figure 3 - BWR Thermal Consequence Decision Tree

	Mission Success:	
	One misloaded assembly represents a possible thermal consequence	Two misloaded assemblies represents a possible thermal consequence
Probability of Misload Leading to a Thermal Conseq. Per Waste Package	6.46E-05	4.98E-05
BWR WPs per year	120	120
Probability/Year	7.75E-03	5.98E-03

Figure 4 - BWR Criticality Consequence Decision Tree

WP Usage	Select WP	Select FA	FA Type	Verification			Endstate	
0.275	0.994	0.994		0.990	2.69E-01		1C	
(no absorber)	(intended WP)	(intended FA)		(success)	(no conseq.)			
				0.010	2.72E-03		2C	
				(failure)	(no conseq.)			
		0.005	0.986	0.990	1.33E-03		3C	
		(concept)	1<k-inf<1.37	(success)	(no conseq.)			
				0.010	1.35E-05		4C	
				(failure)	(criticality)			
			0.014	0.990	1.93E-05		5C	
			k-inf>1.37	(success)	(no conseq.)			
				0.010	1.95E-07		6C	
				(failure)	(criticality)			
		0.001	0.300	0.990	3.57E-03	1.25E-05	7C/7Ca	
		(selection)	k-inf<1	(success)	(no conseq.)			
				0.010	3.61E-05	1.27E-09	8C/8Ca	
				(failure)	(no conseq.)			
			0.690	0.990	6.22E-03	6.60E-05	9C/9Ca	
			1<k-inf<1.37	(success)	(no conseq.)			
				0.010	6.30E-05	6.73E-09	10C/10Ca	
				(failure)	(criticality)			
			0.010	0.990	1.19E-04	1.39E-08	11C/11Ca	
			k-inf>1.37	(success)	(no conseq.)			
				0.010	1.20E-06	1.41E-12	12C/12Ca	
				(failure)	(criticality)			
	0.006	0.275	0.994	0.990	4.47E-04		13C	
	(wrong WP)	(no absorber)	(intended FA)	(success)	(no conseq.)			
				0.010	4.51E-06		14C	
				(failure)	(no conseq.)			
			0.005	0.986	0.990	2.21E-06	15C	
			(concept)	1<k-inf<1.13	(success)	(no conseq.)		
					0.010	2.24E-08	16C	
					(failure)	(criticality)		
				0.014	0.990	3.21E-08	17C	
				k-inf>1.13	(success)	(no conseq.)		
					0.010	3.24E-10	18C	
					(failure)	(criticality)		
			0.001	0.300	0.990	5.93E-06	19C	
			(selection)	k-inf<1.0	(success)	(no conseq.)		
					0.010	5.99E-08	20C	
					(failure)	(no conseq.)		
				0.690	0.990	1.38E-05	21C	
				1<k-inf<1.37	(success)	(no conseq.)		
					0.010	1.38E-07	22C/22Ca	4.12E-15

Figure 4 - BWR Criticality Consequence Decision Tree

						(failure)	(criticality)		
					0.010	0.990	1.98E-07	23C	
					k-inf>1.37	(success)	(no conseq.)		
						0.010	2.00E-09	24C/24Ca	3.90E-18
						(failure)	(criticality)		
			0.715	0.950	0.990	1.11E-03		25C	
			(plate)	k-inf<1.37	(success)	(no conseq.)			
					0.010	1.12E-05		26C	
					(failure)	(no conseq.)			
				0.050	0.990	5.84E-05		27C	
				(k-inf>1.37	(success)	(no conseq.)			
					0.010	8.25E-07		28C	
					(failure)	(criticality)			
			0.010	1.000	0.990	1.63E-05		29C	
			(thick plate)	any FA	(success)	(no conseq.)			
					0.010	1.65E-07		30C	
					(failure)	(no conseq.)			
	0.715	0.994	0.994		0.990	8.99E-01		31C	
	(plate)	(intended WP)	(intended FA)		(success)	(no conseq.)			
					0.010	7.06E-03		32C	
					(failure)	(no conseq.)			
			0.006	0.300	0.990	1.27E-03		33C	
			(wrong FA)	k-inf<1.0	(success)	(no conseq.)			
					0.010	1.28E-05		34C	
					(failure)	(no conseq.)			
				0.690	0.990	2.91E-03		35C	
				1<k-inf<1.37	(success)	(no conseq.)			
					0.010	2.94E-05		36C	
					(failure)	(no conseq.)			
				0.010	0.990	4.22E-05		37C	
				k-inf>1.37	(success)	(no conseq.)			
					0.010	4.26E-07		38C	
					(failure)	(criticality)			
		0.006	0.965	0.994	0.990	4.07E-03		39C	
		(wrong WP)	(no absorber)	(intended FA)	(success)	(no conseq.)			
					0.010	4.11E-05		40C	
					(failure)	(criticality)			
				0.005	0.968	0.990	1.98E-05	41C	
				(concept)	k-inf<1	(success)	(no conseq.)		
						0.010	2.00E-07	42C	
						(failure)	(no conseq.)		
					0.032	0.990	6.61E-07	43C	
					k-inf>1.37	(success)	(no conseq.)		
						0.010	6.68E-09	44C	
						(failure)	(criticality)		
				0.001	0.300	0.990	5.41E-05	45C	

Figure 4 - BWR Criticality Consequence Decision Tree

				(selection)	k-inf<1.0	(success)	(no conseq.)		
						0.010	5.46E-07	46C	
						(failure)	(no conseq.)		
					0.690	0.990	1.24E-04	47C	
					1<k-inf<1.37	(success)	(no conseq.)		
						0.010	1.26E-06	48C/48Ca	1.54E-12
						(failure)	(criticality)		
					0.010	0.990	1.60E-06	49C	
					k-inf>1.37	(success)	(no conseq.)		
						0.010	1.62E-08	50C/50Ca	3.24E-16
						(failure)	(criticality)		
			0.035	1.000	0.990	1.49E-04		51C	
			(thick plate)	(any FA)	(success)	(no conseq.)			
					0.010	1.51E-06			
					(failure)	(no conseq.)		52C	
	0.010	0.994	0.994		0.990	9.78E-03		53C	
	(thick plate)	(intended WP)	intended FA		(success)	(no conseq.)			
					0.010	9.88E-05		54C	
					(failure)	(no conseq.)			
			0.006		1.000	5.96E-05		55C	
			(wrong FA)		(success)	(no conseq.)			
					0.010	5.96E-07		56C	
					(failure)	(no conseq.)			
		0.006	0.404	0.994	0.990	2.39E-05		57C	
		(wrong WP)	(no absorber)	(intended FA)	(success)	(no conseq.)			
					0.010	2.41E-07		58C	
					(failure)	(criticality)			
				0.005	0.303	0.990	3.64E-08	59C	
				(concept)	k-inf<1	(success)	(no conseq.)		
						0.010	3.67E-10	60C	
						(failure)	(no conseq.)		
					0.697	0.990	8.37E-08	61C	
					1<k-inf<1.37	(success)	(no conseq.)		
						0.010	8.45E-10	62C	
						(failure)	(criticality)		
				0.001	0.300	0.990	3.17E-07	63C	
				(selection)	k-inf<1.0	(success)	(no conseq.)		
						0.010	3.20E-09	64C	
						(failure)	(no conseq.)		
					0.690	0.990	7.29E-07	65C	
					1<k-inf<1.37	(success)	(no conseq.)		
						0.010	7.36E-09	66C/66Ca	5.30E-17
						(failure)	(criticality)		
					0.010	0.990	1.06E-08	67C	
					k-inf>1.37	(success)	(no conseq.)		
						0.010	1.07E-10	68C/68Ca	1.11E-20

Figure 4 - BWR Criticality Consequence Decision Tree

						(failure)	(criticality)		
			0.575	0.990	0.990	3.38E-05		69C	
			(plate)	k-inf<1.37	(success)	(no conseq.)			
					0.010	3.42E-07		70C	
					(failure)	(no conseq.)			
				0.010	0.990	3.42E-07		71C	
				k-inf>1.37	(success)	(no conseq.)			
					0.010	3.45E-09		72C	
					(failure)	(criticality)			
			Mission Success:						
								TOTALS	
			One misloaded assembly		Two misloaded assemblies			Conceptual	5.63E-05
			represents a possible		represents a possible			Selection 1	8.56E-05
			criticality consequence		criticality consequence			Selection 2	8.73E-09
	Probability of Misload								
	Leading to a Criticality Conseq.			1.42E-04		5.63E-05			
	Per Waste Package								
	BWR WPs per year			120		120			
	Probability/Year			1.70E-02		8.76E-03			

Figure 5 - BWR Criticality Consequence Decision Tree
Assuming No *No-Absorber* Waste Packages

WP Usage	Select WP	Select FA	FA Type	Verification		Endstate
0.990	0.994	0.994		0.990	9.68E-01	1C'
(plate)	(intended WP)	(intended FA)		(success)	(no conseq.)	
				0.010	9.78E-03	2C'
				(failure)	(no conseq.)	
		0.006	0.300	0.990	1.75E-03	3C'
		(wrong FA)	k-inf<1.0	(success)	(no conseq.)	
				0.010	1.77E-05	4C'
				(failure)	(no conseq.)	
			0.690	0.990	4.03E-03	5C'
			1<k-inf<1.37	(success)	(no conseq.)	
				0.010	4.07E-05	6C'
				(failure)	(no conseq.)	
			0.010	0.990	5.85E-05	7C'
			k-inf>1.37	(success)	(no conseq.)	
				0.010	5.90E-07	8C'
				(failure)	(criticality)	
	0.006	1.000	1.000	0.990	5.88E-03	9C'
	(wrong WP)	(thick plate)	(any FA)	(success)	(no conseq.)	
				0.010	5.94E-05	10C'
				(failure)	(no conseq.)	
0.010	0.994	0.994		0.990	9.78E-03	11C'
(thick plate)	(intended WP)	intended FA		(success)	(no conseq.)	
				0.010	9.88E-05	12C'
				(failure)	(no conseq.)	
		0.006		1.000	5.96E-05	13C'
		(wrong FA)		(success)	(no conseq.)	
				0.010	5.96E-07	14C'
				(failure)	(no conseq.)	
	0.006	1.000	0.990	0.990	5.88E-05	15C'
	(wrong WP)	(plate)	k-inf<1.37	(success)	(no conseq.)	
				0.010	5.94E-07	16C'
				(failure)	(no conseq.)	
			0.010	0.990	5.94E-07	17C'
			k-inf>1.37	(success)	(no conseq.)	
				0.010	6.00E-09	18C'
				(failure)	(no conseq.)	
Probability of Misload						
Leading to a Criticality Conseq.			5.96E-07			
Per Waste Package						
BWR WPs per year			120			

Figure 5 - BWR Criticality Consequence Decision Tree
Assuming No *No-Absorber* Waste Packages

	Probability/Year			7.16E-05				

	All												
	Accidents					From FRA Bulletins 162, 163, 164 Table 20				Number of Derailments and Collisions			
Year	Per 1E6 Mi	References				Cause				1995	1994	1993	93-95
1975	10.6	NUREG/CR-4629 & FRA Bul 163 Fig 5				Train inside yard limits, excess speed				6	8	3	17
1976	13.2	NUREG/CR-4629 & FRA Bul 163 Fig 5				Train outside yard limits, excess speed				3	2	2	7
1977	13.8	NUREG/CR-4629 & FRA Bul 163 Fig 5				Failure to comply with restricted speed				12	16	6	34
1978	15	NUREG/CR-4629 & FRA Bul 163 Fig 5				Speed, other				12	5	6	23
1979	12.8	NUREG/CR-4629 & FRA Bul 163 Fig 5				Failure to secure engine - rr empl				7	5	5	17
1980	11.8	NUREG/CR-4629 & FRA Bul 163 Fig 5				Failure to secure car hand brake - rr empl				10	18	20	48
1981	8.55	NUREG/CR-4629 & FRA Bul 163 Fig 5				Failure to apply suff. hand brakes - rr empl				28	21	16	65
1982	8	NUREG/CR-4629 & FRA Bul 163 Fig 5				Failure to apply car hand brakes - rr empl				14	10	9	33
1983	7	Est. Based on FRA Bul 163 Fig 5				Failure to contrl car spd use hand brake - rr empl				2	2	2	6
1984	6.6	Est. Based on FRA Bul 163 Fig 5				Mechanical/Electrical Failure - Brakes				38	21	32	89
1985	6	Est. Based on FRA Bul 163 Fig 5				No. of Derailments/Collisions Related to Speed Control				130	106	101	337
1986	4.8	Est. Based on FRA Bul 163 Fig 5				Total No. of Accidents That Year				2619	2669	2785	8073
1987	4.6	Est. Based on FRA Bul 163 Fig 5				Percent of Accidents that are Derail./Collisn. Related to Speed Control				4.96%	3.97%	3.63%	4.17%
1988	5	Est. Based on FRA Bul 163 Fig 5											
1989	4.96	FRA Bul 163 Fig 5 and Table 4											
1990	5	FRA Bul 163 Fig 5 and Table 4				From FRA Bulletins 162, 163, 164 Table 10				1995	1994	1993	93-95
1991	4.88	FRA Bul 163 Fig 5 and Table 4				No. of Derailments/Collisons > 10 mph				564	562	582	1708
1992	4.26	FRA Bul 163 Fig 5 and Table 4				Total No. of Accidents That Year				2619	2669	2785	8073
1993	4.54	FRA Bul 163 Fig 5 and Table 4				Percent of Accidents that are Derailments/Collisions > 10mph				21.53%	21.06%	20.90%	21.16%
1994	4.07	FRA Bul 163 Fig 5 and Table 4											
1995	3.91	FRA Bul 164 Table 4											
20 Year Avg.	7.59	per million miles	4.72	per million km									
Last 5 Years	4.33	per million miles	2.69	per million km									
						Rate of Derail./Collisn. > 10mph Related to Speed Control				2.38E-08	per km		
						Average No. of Transporter Trips				456	per year		
						Average Trip Length				5	km		
						Estimated Freq. of Accidents > 10mph from Loss of Transporter Speed Control				5.42E-05	per year		

Transporter Runaway Maximum Speeds

Input			Reference
Acceleration of gravity	9.8	m/s^2	
N. Ramp Grade	2.15%		Preliminary Repository Layout December 1996, Sketch M-SK-001, Batch No. MOY-970116-03
Normal max. transporter & loco. speed	8	km/hr	Ref. 5.7, Vol. II, pg E-16 (Ref. 5.22)
Transporter Rolling Resistance	2.00E+01	lb/ton	Ref. 5.7, Vol. II, pg E-19 GM 4/8/97

Note: 100% grade = 45 degrees

Calculation

Frictionless Acceleration	0.16536779	m/s^2
Acceleration w/ Rolling Resistance	0.06738174	m/s^2

a=g*sin(grade%*45*pi/180)

a=g*(sin(grade%*45*pi/180)-resistance/2000 lbs/ton*cos(grade%*45*pi/180))

Distance Traveled From Starting Point (m)	Frictionless Velocity: Initial Velocity = 0 km/hr km/hr	Frictionless Velocity: Initial Velocity = 0 km/hr miles/hr	Frictionless Velocity: Initial Velocity = 8 km/hr km/hr	Frictionless Velocity: Initial Velocity = 8 km/hr miles/hr	Velocity Considering Rolling Resitance: Initial Velocity = 0 km/hr km/hr	Velocity Considering Rolling Resitance: Initial Velocity = 0 km/hr miles/hr	Velocity Considering Rolling Resitance: Initial Velocity = 8 km/hr km/hr	Velocity Considering Rolling Resitance: Initial Velocity = 8 km/hr miles/hr	Vert. Drop Height (m) for same Vel.
0	0.00	0.00	8.00	4.97	0.00	0.00	8.00	4.97	0.25
100	20.70	12.86	22.20	13.79	13.22	8.21	15.45	9.60	0.94
200	29.28	18.19	30.35	18.86	18.69	11.61	20.33	12.63	1.63
300	35.86	22.28	36.74	22.83	22.89	14.22	24.25	15.07	2.31
400	41.41	25.73	42.17	26.20	26.43	16.42	27.82	17.16	3.00
500	46.29	28.77	46.98	29.19	29.55	18.36	30.61	19.02	3.69
1000	65.47	40.68	65.96	40.98	41.79	25.97	42.55	26.44	7.13
1250	73.20	45.48	73.63	45.75	46.72	29.03	47.40	29.46	8.85
1500	80.18	49.82	80.58	50.07	51.18	31.80	51.81	32.19	10.57
1750	86.61	53.82	86.98	54.05	55.29	34.35	55.86	34.71	12.28
2000	92.59	57.53	92.93	57.75	59.10	36.72	59.64	37.06	14.00
2250	98.21	61.02	98.53	61.22	62.69	38.95	63.20	39.27	15.72
	Both use v=sqrt(v0+2as)						^		h=v^2/(2g)

CO_2 cleanblast

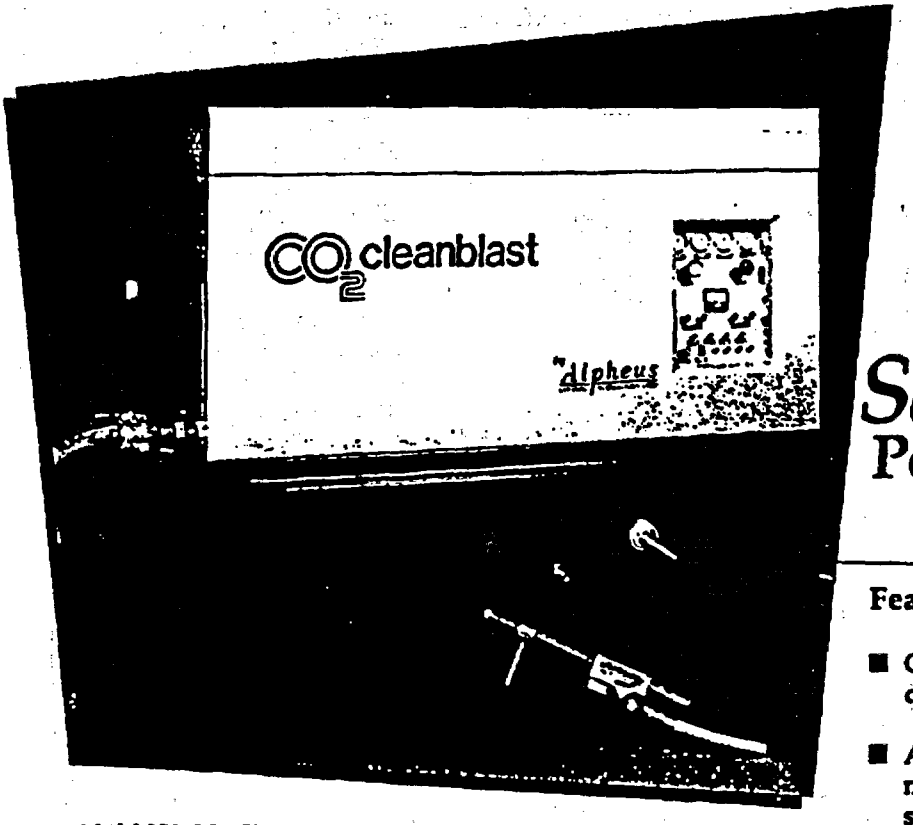

Model 250 CO_2 Cleanblast™ Pelletizer (above) creates small, uniform pellets of dry ice and feeds them into a pressurized air delivery system for cleaning in a variety of industrial applications.

Series 200 Pelletizers

Features

- Creates a controllable supply of high quality dry ice pellets
- Advanced heat exchanger system maximizes conversion from liquid to solid CO_2
- Proprietary snow chamber design ensures reliability
- Optional nozzle geometries for specific cleaning requirements
- Pellet velocities adjustable from 75 ft/sec to 1000 ft/sec
- Technology proven in hundreds of applications

Benefits of CO_2 Cleanblast™

- Dramatic increases in cleaning productivity
  - Elimination of disassembly/ reassembly for cleaning
  - No masking
  - Less scrap, less contaminated waste
  - Almost no cleanup
- Safe for personnel and environment
  - Substitutes for hazardous chemicals
  - Disposal costs dramatically reduced
  - No water usage
  - Non-corrosive, non-conductive
- Effective cleaning without grit or chemicals
  - No change in surface dimensions or finish
  - No residue on surfaces
  - No sedimentation or grit entrapment
- Broad range of cleaning applications
  - End products
  - In-process machinery
  - Preventive maintenance
  - De-coating
  - Automation equipment
  - Electrical panels and controls
  - Decontamination

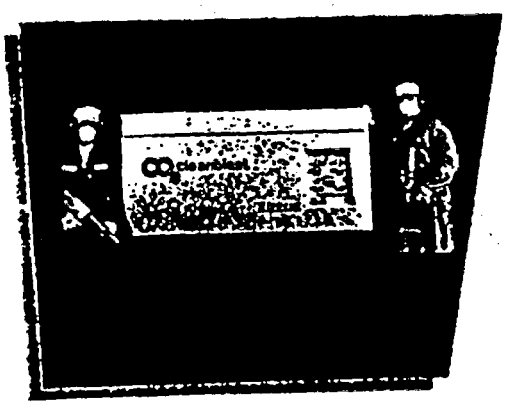

The Model 295 Pellletizer is equipped with two complete blasting stations (above). Cleaning of a foundry core box (center). Uniform dry ice pellets made by CO_2 Cleanblast™ Pelletizers (right column).

CO_2 Cleanblast™ Technology

CO_2 Cleanblast™ systems create and deliver a high-velocity stream of solid CO_2 pellets (dry ice) for blast cleaning. Adjusting the size, velocity and quantity of pellets provides the capability of cleaning a wide variety of equipment and products. CO_2 has proven effective with such varied surfaces as plastics, ceramics, exotic metals, composites, and stainless steel.

The impact-flushing action of CO_2 Cleanblast™ is unique. The pellets penetrate to the underlying surface on impact, where they break apart, creating a high-speed flow of dry ice particles that lift the contaminant from underneath.

How CO_2 Cleanblast™ Pelletizers work.

Alpheus pelletizers take in refrigerated liquid CO_2 and convert it to dry ice snow inside a pressurized chamber. The snow is compressed and forced through a proprietary ring die, creating high quality, uniform pellets.

CO_2 Cleanblast™ equipment uses a patented two-hose delivery system to maximize cleaning effectiveness. The dry ice pellets are fed from a hopper through an air lock into a low-pressure delivery hose that carries the pellets to the blasting gun. Here they are accelerated by compressed air to the target surface at precise velocities. This steady flow of uniform, solid pellets is the basis of effective cleaning with CO_2 Cleanblast™.

Alpheus Dry Ice Pellets

CO_2 pellets are dry and non-conductive. Since the pellets return to a gaseous state on impact, they do not create added disposal costs. Blast cleaning with CO_2 pellets is safe for equipment, personnel and the environment, and the pellets meet AQMD, FDA and USDA safety standards.

Effective cleaning with dry ice requires uniformity and predictability of the pellets. Alpheus engineers have designed CO_2 Cleanblast™ pelletizers with pellet consistency as a primary focus.

There is an optimum pellet size, velocity and delivery rate for each application. A pellet rate that is too high can hinder cleaning effectiveness by restricting velocity. Too few pellets starve the application.

Pellet size can be specified on the basis of substrate characteristics and material to be removed. In typical applications, cylindrical pellets 0.125" in diameter and averaging 0.250" in length are used. Alternative ring dies provide pellet diameters of 0.0625" to 0.300". Density of CO_2 Cleanblast™ pellets exceeds 95% of the theoretical maximum.

Pellet velocity is adjustable in all Alpheus blasting stations.

Along with alternative ring dies, a variety of nozzles and enhancements are available to optimize the Alpheus CO_2 Cleanblast™ system for your application.

CO_2 cleanblast™

Series 200 Pelletizers

Series 200 CO_2 Cleanblast™ Pelletizers all use the same pelletizer and snow chamber technology to manufacture uniform dry ice pellets. All but the Model 200 include a blasting station.

Model 200
- Pelletizer only
- Capable of servicing several Portable Cleaning Stations simultaneously with a fill time of 80 minutes each
- Pellet make rate of 5 lbs/min
- Upgradeable to include blast cleaning station

Model 250
- Full spectrum blasting station built in, capable of operating from 40 psig to 300 psig
- Operates entirely on its own. Excess pellet capacity can be used to fill Portable Cleaning Stations

Model 290
- Full spectrum blasting station
- High capacity air lock
- Panel controlled variable pellet rate, 2-10 lb/min
- Can service a fleet of up to 6 Portable Cleaning Stations

Model 295
- Two fully independent blasting stations
- Two high capacity airlocks
- Panel controlled variable pellet rate, 2-10 lb/min
- Can service a fleet of up to 6 Portable Cleaning Stations.

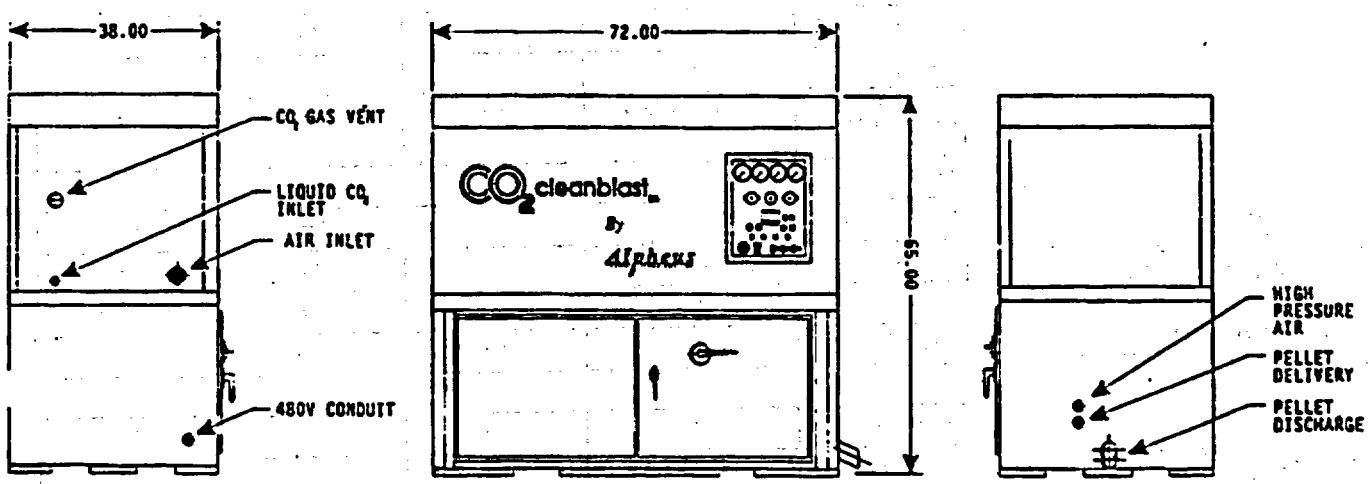

Reliability

High reliability is engineered into all CO_2 Cleanblast™ pelletizers. There are almost no moving parts. Scheduled maintenance is limited to semi-annual lubrication and inspection of belts and hoses.

CO_2 Cleanblast™ systems in the field routinely operate up to 22 hours a day, 7 days a week.

Proprietary ring die design ensures consistent pellets.

Application Effectiveness

Contact an Alpheus specialist to discuss your specific applications and explore the many uses for CO_2 Cleanblast™ technology.

CO2 Cleanblast Series 200 Specification Table

Item	Model 200	Model 250	Model 290	Model 295
Pellet Velocities	N/A	75-1,000 ft/sec	75-1,000 ft/sec	75-1,000 ft/sec
Pellet Make Rate (maximum)	5 lbs/min	5 lbs/min	10 lbs/min	10 lbs/min
Air Supply	N/A	40-300 psig	40-300 psig	40-300 psig
	N/A	450SCFM @ 250 psig (inlet)	450SCFM @ 250 psig (inlet)	900SCFM @ 250 psig (inlet)
	N/A	100° F max. @ inlet	100° F max. @ inlet	100° F max. @ inlet
	N/A	Controllable discharge pressure	Controllable discharge pressure	Controllable discharge pressure
Air Lock	No	Rotary	High Capacity Rotary	High Capacity Rotary (Two)
Dimensions	65"H x 38"W x 72"L (165.1cm x 96.5 cm x 189.2cm)	65"H x 38"W x 72"L (165.1cm x 96.5 cm x 189.2cm)	65"H x 38"W x 72"L (165.1cm x 96.5 cm x 189.2cm)	65"H x 38"W x 72"L (165.1cm x 96.5 cm x 189.2cm)
Weight	1900 lbs (886.4kg)	1950 lbs (886.4kg)	2000 lbs (886.4kg)	2100 lbs (909.1kg)
Electric Power	480 VAC, 3-phase, 60Hz	480 VAC, 3-phase, 60Hz	480 VAC, 3-phase, 60Hz	480 VAC, 3-phase, 60Hz
	10 HP motor	10 HP motor	20 HP motor	20 HP motor
	Consumes 11 kW max.	Consumes 17 kW max.	Consumes 33 kW max.	Consumes 34 kW max.
Accessories Supplied	None	1-50' hose and gun assembly	1-50' hose and gun assembly	1-50' hose and gun assembly

Control Panel

Item	Model 200	Model 250	Model 290	Model 295
Programmmable Controller	Yes	Yes	Yes	Yes
Blast Air Pressure Regulator	N/A	Yes	Yes	Yes
Cool-Down Valve Control	Yes	Yes	Yes	Yes
Gauges				
Blast Air Pressure	N/A	Yes	Yes	Yes
Transport Air Pressure	N/A	Yes	Yes	Yes
Instrument Air Pressure	N/A	Yes	Yes	Yes
CO2 Pressure	Yes	Yes	Yes	Yes
Ionizer Amperes	Yes	Yes	Yes	Yes
Switches				
Pelletizer-ON/OFF	Yes	Yes	Yes	Yes
CO2 Supply-ON/OFF	Yes	Yes	Yes	Yes
Pellet Production-Continuous/Blast Only	Pellet Production Only	Yes	Yes	Yes
Overrides				
Low pressure air	N/A	Yes	Yes	Yes
High pressure air	N/A	Yes	Yes	Yes
Diverter	Yes	Yes	Yes	Yes
Trigger	N/A	Yes	Yes	Yes
Indicators				
Power	Yes	Yes	Yes	Yes
Emergency Stop	Yes	Yes	Yes	Yes

Alpheus CLEANING TECHNOLOGIES CORP.
9119 Milliken Avenue
Rancho Cucamonga, CA 91730

Telephone: (909) 944-0055
FAX: (909) 980-5696
TOLL FREE: (800) 445-6131

© Alpheus Cleaning Technologies Corp. 1991. All rights reserved.