858

CONTRACTOR REPORT

SAND83—7436/1
Unlimited Release
UC—70

NNWSI Repository Worker Radiation Exposure, Volume 1, Spent Fuel and High-Level Waste Operations in a Geologic Repository in Tuff

A. W. Dennis

J. C. Frostenson, K. J. Hong
Los Alamos Technical Associates, Inc.
Los Alamos, NM 87544

Prepared by Sandia National Laboratories Albuquerque, New Mexico 87185 and Livermore, California 94550 for the United States Department of Energy under Contract DE-AC04-76DP00789

Printed May 1984

Issued by Sandia National Laboratories, operated for the United States Department of Energy by Sandia Corporation.

Printed in the United States of America
Available from
National Technical Information Service
U.S. Department of Commerce
5285 Port Royal Road
Springfield, VA 22161

NTIS price codes
Printed copy: A06
Microfiche copy: A01

SAND83-7436/1

UC-70
Unlimited Release
Printed May 1984

NNWSI REPOSITORY WORKER RADIATION EXPOSURE VOLUME I SPENT FUEL AND HIGH-LEVEL WASTE OPERATIONS IN A GEOLOGIC REPOSITORY IN TUFF

A. W. Dennis

Nuclear Waste Engineering Projects
Division 6311
505 Sandia National Laboratories
Albuquerque, NM 87185
~~844-5678~~ and
844-5459
J. C. Frostenson
K. J. Hong

Los Alamos Technical Associates, Inc.
Los Alamos, New Mexico 87544

Under Sandia Contract:
37-8618

ABSTRACT

The Nevada Nuclear Waste Storage Investigations project has as one of its principal objectives the conceptual design of the buildings and facilities that will be required for a commercially generated radioactive waste repository. This report has been prepared for use by the repository designers in the conceptual design of the high-level (Volume I) and transuranic (Volume II) waste-handling facilities and equipment. This report contains a listing of repository operations tasks and the anticipated worker radiation exposure. All annual exposures are below the 5 rem permissible dose equivalent limit with seven worker positions exceeding the design objective of 1 rem. These worker exposures will be reduced by performing tasks remotely.

TABLE OF CONTENTS

TABLE OF CONTENTS
(concluded)

LIST OF TABLES

LIST OF TABLES
(concluded)

LIST OF FIGURES

EXECUTIVE SUMMARY

As part of the Department of Energy's (DOE) Nevada Nuclear Waste Storage Investigations project, an estimate of worker radiation exposure during high-level waste receiving, handling and packaging, emplacement, and retrieval has been made for a geologic repository in tuff. Information is included in this volume concerning the types of high-level waste, quantities of waste received at the repository, waste source terms, radiation dose maps for transport casks, anticipated facility operations, worker crew numbers, and annual worker exposure.

The permissible dose equivalent limit for worker exposure is 5 rem/yr (DOE Order 5480.1) with a prescribed design objective of 1 rem/yr under normal operating conditions. It is assumed that the facilities will be designed to reduce the annual exposure to individual workers and to the total repository work force to the lowest level reasonably achievable.

It is assumed that four types of high-level waste (HLW) could be shipped to a repository at the Yucca Mountain site in Nevada. They include: spent reactor fuel (SF), commercial high-level waste (CHLW), defense high-level waste (DHLW), and West Valley high-level waste (WVHLW). The spent reactor fuel consists of both pressurized water reactor fuel (PWR) and boiling water reactor fuel (BWR), currently assumed to be 10 yr or more out-of-reactor. The repository will receive a small amount of WVHLW that is expected to be similar to the DHLW, and therefore is not considered separately. The SF and HLW to be handled in the repository have different physical characteristics and quantities. This requires a specific radiation source term for each type of waste.

Specific operations were identified, individual tasks were listed, operations times were allotted, and crew identification numbers were assigned. Crew member positions were assigned based on the requirements of a specific task. The number of individual workers assigned to each crew member position was estimated from the annual waste receipts and anticipated facility

operation times. The annual worker exposure for each task and individual was calculated from the anticipated operations times, the estimated worker exposure times for each task, the radiation field in which the operation was performed, and the annual receival and handling rates for SF and HLW. Background radiation exposures for remote and shielded operations were included in the total estimates.

All annual exposures are below the 5 rem permissible dose equivalent limit with seven emplacement and eight retrieval crew member positions exceeding the design objective of 1 rem. These individuals perform tasks near the shipping or facility cask surface and are exposed to the radiation level associated with these tasks for the duration of an operation. The emplacement and retrieval crew member positions which exceed the design objective are

Operation	Worker	Task	Worker Exposure Individual (rem/yr)	Worker Exposure Total (man-rem/yr)
Emplacement:				
Receiving;	Quality control	carrier inspection	2.48	4.96
	Radiation monitor	cask and carrier monitoring	2.29	9.15
	Quality control	cask inspection	1.33	5.33
	Operator	cask unloading	1.27	5.06
	Operator	cask preparation	2.36	18.91
Vertical;	Operator	transport and emplacement	2.88	11.53
Horizontal;	Operator	transport and emplacement	4.31	8.62
Retrieval:				
Vertical;	Operator	retrieval and transport	1.96	11.73
Horizontal;	Operator	retrieval and transport	4.31	8.62

Operation	Worker	Task	Worker Exposure Individual (rem/yr)	Worker Exposure Total (man-rem/yr)
Ramp;	Storage officer	waste package to surge storage	1.76	1.76
Handling and Packaging;	Hot cell officer	shipping cask loading	1.84	1.84
Shipping;	Operator	shipping cask preparation	3.47	6.93
	Radiation monitor	cask and carrier monitoring	2.24	2.24
	Operator	cask loading on carrier	3.69	3.69
	Quality control	cask monitoring	3.09	3.09

These levels will be reduced by performing near-cask-surface tasks remotely.

1.0 INTRODUCTION

Sandia National Laboratories, under the direction of the Department of Energy, and in cooperation with Lawrence Livermore National Laboratory, Los Alamos National Laboratory, the United States Geological Survey, and Science Applications, Inc., is engaged in studies supporting the Nevada Nuclear Waste Storage Investigations (NNWSI) Project. These studies are being conducted as part of the National Waste Terminal Storage Program and in accordance with the Nuclear Waste Policy Act of 1982. If constructed, this project would provide for a repository on federally owned land at Yucca Mountain, Nye County, Nevada.

One of Sandia's responsibilities is the conceptual design of the repository surface and underground facilities. An important aspect of this conceptual design effort is assuring that the predicted radiation dose received by the individual repository worker and the collective repository staff is acceptable for normal repository operations.

The facility design, as it is related to worker exposure, has been approached in the following manner:

- the waste types and quantities to be sent to the repository were identified,
- the applicable regulations promulgated by the Department of Transportation (DOT) were reviewed to determine allowable transportation worker exposure,
- the conceptual designs for offsite waste transportation packaging (shipping casks) were identified,
- radiation dose rate maps for offsite casks containing high-level waste were obtained,
- the annual number of shipments to the repository was estimated,
- the annual number of waste disposal packages to be emplaced in the repository was calculated,
- the conceptual designs for onsite waste transportation packaging (facility casks) were identified,

- the applicable regulations promulgated by the Department of Energy (DOE), the Nulcear Regulatory Commission (NRC), and the Environmental Protection Agency (EPA) were reviewed to determine allowable worker exposure,
- a preliminary operating plan for receiving, handling and packaging, emplacing, and retrieving waste was written, and
- radiation dose rate maps for onsite transfer of casks containing waste were estimated.

DOT regulation, 49 CFR 173, specifies that the shipping package, canister or assembly in a cask, shall be designed and prepared so that the radiation level does not exceed 200 mrem/hr at any point on the external surface.

After a review of the DOE, NRC, and EPA regulations, it was assumed that the governing criterion for the facility design is DOE Order 5480.1. However, both NRC and EPA regulations are currently being revised. The design criterion may change when these regulations are promulgated. DOE Order 5480.1 states:

> "... Exposure rates in work areas should be reduced as low as reasonably achievable by proper facility design and equipment layout. Design factors to consider are occupancy time, source terms, spacing, processes, equipment, and shielding. Onsite personnel exposure levels less than 1/5 of the permissible dose equivalent limits prescribed in this chapter should be used as a design objective..."

The permissible dose equivalent limit is 5 rem/yr; hence the prescribed design objective is 1 rem/yr. The waste handling facilities will be designed to limit the maximum individual worker exposure to 1 rem/yr under normal operating conditions. Further, the facilities will be designed to reduce the annual exposure to individual workers and to the total repository work force to the lowest level reasonably achievable. The basis for deciding what is reasonably achievable will be the incremental cost of dose reduction as

discussed in "Recommendations of the International Commission on Radiological Protection," ICRP Publication 26, adopted January 1977 and the guidance provided by DOE/EV/1830-T5, "A Guide to Reducing Radiation Exposure to As Low As Reasonably Achievable (ALARA)."

To meet this design guideline, extensive use of remotely controlled and automated equipment will be required in the waste receiving and unloading operations, in the preparation of waste packages for emplacement, and in the waste emplacement and retrieval operations. Engineering studies are being conducted to identify those operations for which it is cost-effective to provide the operator with a shielded cab, console, or work station and those operations for which it is cost-effective to use remote handling and automated handling equipment.

This document is the first volume of a two-volume report. This volume describes the worker exposure incurred during the receiving, handling and packaging, transfer, emplacement, and retrieval of spent fuel and high-level waste. Volume II addresses repository worker exposure from transuranic waste.

Following this introduction, the report is divided into four sections.

- Section 2 contains a source definition of the spent fuel and high-level waste that will be received at the repository.

- Section 3 describes the radiation environment for transportation packaging with dose maps for both shipping and facility casks.

- Section 4 lists the operations, crew number and crew member identifications, areas of exposure, exposure times, annual waste receipts, number of workers, and exposures for the operations described in NNWSI Repository Operational Procedures, Volume I (Dennis, et al., 1983).

- Section 5 presents the estimated annual exposure for each worker by crew member and task, with the total exposure based on annual waste receipts.

This document is intended to be used in system studies, in the conceptual design of repository facilities, and in the conceptual design of repository waste handling equipment. All operation times and subsequent worker exposures are estimates based on available information and are considered approximate and conservative. As conceptual design proceeds, this document will be revised to reflect Sandia National Laboratories' understanding of the waste characteristics, waste packaging, and planned repository operations.

2.0 SOURCE DEFINITION

It is assumed that four types of high-level waste (HLW) could be shipped to a repository at Yucca Mountain. They include:

- spent reactor fuel (SF) as spent fuel assemblies (SFAs),
- commercial high-level waste (CHLW),
- defense high-level waste (DHLW), and
- West Valley high-level waste (WVHLW).

The spent reactor fuel consists of both pressurized water reactor (PWR) fuel and boiling water reactor (BWR) fuel. The repository could receive a total of 300 canisters of WVHLW that is expected to be similar to the DHLW, and therefore will not be considered separately. A complete description of the waste with specific receipt rates for both rail and truck transportation is contained in forthcoming DOE guidance.

The spent fuel and high-level waste to be handled in the repository have different physical characteristics and quantities. This, in turn, defines a specific radiation source term for each waste form. The main radiation sources emitted from all of these waste forms are gamma rays and neutrons. Gamma rays come from activation products, actinides and their decaying daughters, and fission products. Neutrons come from alpha, neutron (α, n) reaction and spontaneous fission.

2.1 Spent Fuel

After the receiving operations, the SFAs are disassembled and the individual fuel rods are placed in disposal packages. The PWR consolidated fuel packages contain spent fuel rods from 6 PWR SFAs, while the BWR consolidated fuel packages contain rods from 18 BWR SFAs (O'Brien, 1984).

2.1.1 Spent Fuel Assemblies

PWR SFAs

The PWR SFAs received at the repository are assumed to be a 10-yr-old Westinghouse designed assembly with a 3.2 wt% enrichment and 32,717 MWd/MTIHM burnup.

The intensities for gamma-ray and neutron sources were calculated using the isotope generation and depletion computer code, ORIGEN2 (Personal communication, 1982). The resulting radiation sources for a PWR SFA are listed in Tables 2-1 and 2-2.

BWR SFAs

The BWR SFAs received at the repository are assumed to be a 10-yr-old General Electric designed assembly with a 2.75 wt% enrichment and 27,500 MWd/MTIHM burnup.

The intensities of gamma-ray and neutron sources were calculated using the isotope generation and depletion computer code, ORIGEN2 (Personal communication, 1983). The resulting radiation sources for a BWR SFA are listed in Tables 2-3 and 2-4.

2.1.2 Consolidated Fuel

PWR Consolidated Fuel

The PWR consolidated fuel in the repository is assumed to be composed of rods from 6 PWR SFAs. The radiation sources for a PWR SFA already described can then be scaled to obtain an upper bound from radiation sources for PWR consolidated fuel packages. The results are listed in Tables 2-5 and 2-6.

TABLE 2-1

GAMMA-RAY INTENSITY FROM A 10-YR-OLD PWR SFA

Gamma Energy (MeV)	Gamma-Ray Intensity (photons/sec/assembly)
9.5	4.781E + 04
7.0	4.163E + 05
5.0	3.611E + 06
3.5	2.729E + 08
2.75	2.206E + 09
2.25	3.356E + 10
1.75	1.408E + 12
1.25	6.336E + 13
0.85	1.202E + 14
0.575	1.505E + 15
0.375	4.176E + 13
0.225	8.520E + 13
0.125	9.636E + 13
0.085	1.027E + 14
0.0575	1.750E + 14
0.0375	2.265E + 14
0.025	1.894E + 14
0.01	8.732E + 14

TABLE 2-2

NEUTRON INTENSITY FROM A 10-YR-OLD PWR SFA

Source	Neutron Intensity (neutrons/sec/assembly)
(α, n) reaction	6.656E + 06
Spontaneous fission	8.182E + 07
Total	8.847E + 07

TABLE 2-3

GAMMA-RAY INTENSITY FROM A 10-YR-OLD BWR SFA

Gamma Energy (MeV)	Gamma-Ray Intensity (photons/sec/assembly)
9.5	1.330E + 04
7.0	1.158E + 05
5.0	1.005E + 06
3.5	7.927E + 07
2.75	6.333E + 08
2.25	9.357E + 09
1.75	4.490E + 11
1.25	2.294E + 13
0.85	3.577E + 13
0.575	4.932E + 14
0.375	1.376E + 13
0.225	2.787E + 13
0.125	3.127E + 13
0.085	3.423E + 13
0.0575	5.775E + 13
0.0375	7.437E + 13
0.025	6.231E + 13
0.01	2.864E + 14

TABLE 2-4

NEUTRON INTENSITY FROM A 10-YR-OLD BWR SFA

Source	Neutron Intensity (neutrons/sec/assembly)
(α, n) reaction	8.815E + 05
Spontaneous fission	2.273E + 07
Total	2.361E + 07

TABLE 2-5

GAMMA-RAY INTENSITY FROM A 10-YR-OLD PWR CONSOLIDATED FUEL

Gamma Energy (MeV)	Gamma-Ray Intensity (photons/sec/bundle)
9.5	2.869E + 05
7.0	2.498E + 06
5.0	2.167E + 07
3.5	1.637E + 09
2.75	1.324E + 10
2.25	2.014E + 11
1.75	8.448E + 12
1.25	3.802E + 14
0.85	7.212E + 14
0.575	9.030E + 15
0.375	2.506E + 14
0.225	5.112E + 14
0.125	5.782E + 14
0.085	6.162E + 14
0.0575	1.050E + 15
0.0375	1.359E + 15
0.025	1.136E + 15
0.01	5.239E + 15

TABLE 2-6

NEUTRON INTENSITY FROM A 10-YR-OLD PWR CONSOLIDATED FUEL

Source	Neutron Intensity (neutrons/sec/bundle)
(α, n) reaction	3.994E + 07
Spontaneous fission	4.909E + 08
Total	5.308E + 08

BWR Consolidated Fuel

The BWR consolidated fuel in the repository is assumed to be composed of rods from 18 BWR SFAs. The radiation sources for BWR consolidated fuel are scaled to obtain an upper bound from the radiation sources for the BWR SFA packages. The results are listed in Tables 2-7 and 2-8.

2.2 High-Level Waste

The HLW received and handled in the repository operations is in the form of either CHLW or DHLW. A typical CHLW canister has a weight of 825 kg (1,815 lb). A typical DHLW canister weighs 1,950 kg (4,300 lb). A more detailed description of HLW is presented in the document "Characterization of Waste for a Repository at Yucca Mountain, Nevada" (O'Brien, 1984).

2.2.1 Commercial High-Level Waste (CHLW)

The CHLW handled in the repository is assumed to be the high-level waste resulting from the reprocessing of 10-yr-old PWR or BWR SFAs.

The intensities for gamma-ray and neutron sources were calculated using the isotope generation and depletion computer code, ORIGEN2 (Personal communications, 1982 and 1983). The resulting radiation sources for PWR high-level waste are higher than those for BWR high-level waste and, therefore, were used as the assumed, upper bound radiation source for CHLW. The radiation sources for PWR high-level waste are listed in Tables 2-9 and 2-10.

2.2.2 Defense High-Level Waste (DHLW)

The DHLW handled in the repository is assumed to be the high-level waste produced in the proposed Savannah River Defense Waste Processing Facility (SRDWPF). The composition of SRDWPF waste is assumed to be the 5-yr-old sludge plus 15-yr-old supernate in glass waste form (O'Brien, 1984).

TABLE 2-7

GAMMA-RAY INTENSITY FROM A 10-YR-OLD BWR CONSOLIDATED FUEL

Gamma Energy (MeV)	Gamma-Ray Intensity (photons/sec/bundle)
9.5	2.394E + 05
7.0	2.084E + 06
5.0	1.809E + 07
3.5	1.427E + 09
2.75	1.140E + 10
2.25	1.684E + 11
1.75	8.082E + 12
1.25	4.129E + 14
0.85	6.439E + 14
0.575	8.878E + 15
0.375	2.477E + 14
0.225	5.017E + 14
0.125	5.629E + 14
0.085	6.161E + 14
0.0575	1.040E + 15
0.0375	1.339E + 15
0.025	1.122E + 15
0.01	5.155E + 15

TABLE 2-8

NEUTRON INTENSITY FROM A 10-YR-OLD BWR CONSOLIDATED FUEL

Source	Neutron Intensity (neutrons/sec/bundle)
(α, n) reaction	1.587E + 07
Spontaneous fission	4.091E + 08
Total	4.250E + 08

TABLE 2-9

GAMMA-RAY INTENSITY FROM A TYPICAL COMMERCIAL HIGH-LEVEL WASTE

Gamma Energy (MeV)	Gamma-Ray Intensity (photons/sec/MTIHM)
9.5	1.012E + 05
7.0	8.808E + 05
5.0	7.638E + 06
3.5	5.911E + 08
2.75	4.778E + 09
2.25	7.254E + 10
1.75	3.050E + 12
1.25	1.063E + 14
0.85	2.604E + 14
0.575	3.258E + 15
0.375	8.850E + 13
0.225	1.830E + 14
0.125	2.074E + 14
0.085	2.202E + 14
0.0575	3.746E + 14
0.0375	4.865E + 14
0.025	4.018E + 14
0.01	1.846E + 15

TABLE 2-10

NEUTRON INTENSITY FROM A TYPICAL COMMERCIAL HIGH-LEVEL WASTE

Source	Neutron Intensity (neutrons/sec/MTIHM)
(α, n) reaction	1.117E + 07
Spontaneous fission	1.740E + 08
Total	1.852E + 08

The gamma-ray intensities for a typical DHLW are listed in Table 2-11. The neutron intensity is very small and thus neglected.

TABLE 2-11

GAMMA-RAY INTENSITY FROM A TYPICAL DEFENSE HIGH-LEVEL WASTE

Gamma Energy (MeV)	Gamma-Ray Intensity (photons/sec/canister)
3.125	1.246E + 09
2.5	8.900E + 09
2.0	2.588E + 12
1.5	5.808E + 11
1.05	2.881E + 13
0.7125	2.442E + 13
0.475	1.350E + 13
0.3	1.189E + 13
0.175	3.756E + 12
0.1125	5.678E + 13
0.085	1.723E + 14

3.0 RADIATION ENVIRONMENT FOR TRANSPORTATION PACKAGING

The spent fuel received at the repository is in the form of spent fuel assemblies (SFAs) which are stored and transported in shipping casks. The number of SFAs in a cask depends on the type of SFA (i.e., PWR SFA or BWR SFA) and the transportation vehicle (i.e., truck or rail). After the receiving and handling operations the spent fuel assemblies are disassembled and consolidated. The consolidated fuel is then transported in facility casks underground for emplacement.

The high-level waste either in the form of DHLW or CHLW is immobilized in a canister which is then placed in a shipping cask for transportation to the repository. After the receiving and handling operations, the canister is removed from the shipping cask, placed in surface surge-storage, and then transported underground in a facility cask for emplacement (Dennis, et al., 1983).

Dose rate maps were prepared (Wan and Schneringer, 1983) for the reference PWR SFA, BWR SFA, CHLW, and DHLW waste contained in truck and rail casks as described in "Reference Cask Conceptual Descriptions" (GA Technologies, Inc., 1983). The number of dose rate data points from the Wan and Schneringer study was reduced to simplify the worker exposure calculation process and to quantify those areas where actual operations are assumed to occur.

The area surrounding a shipping cask and a facility cask has been divided into sub-areas as shown in Figures 3-1 and 3-2. The first zone, designated as Area 1, is where the near-cask-surface operations occur. Sub-areas 1.2, 1.3, 1.4, and 1.5 define different positions near the cask surface within Area 1. Similarly, Area 2 is approximately 3 ft (1.5 ft to 4.5 ft) away from the cask surface and Area 3 is approximately 6 ft (4.5 ft to 7.5 ft) from the cask surface. Area 4 includes those activities which occur 7.5 ft and beyond the cask surface. Dose rates were not included for the cask sub-areas at the corners because operations are not specified for those sub-areas.

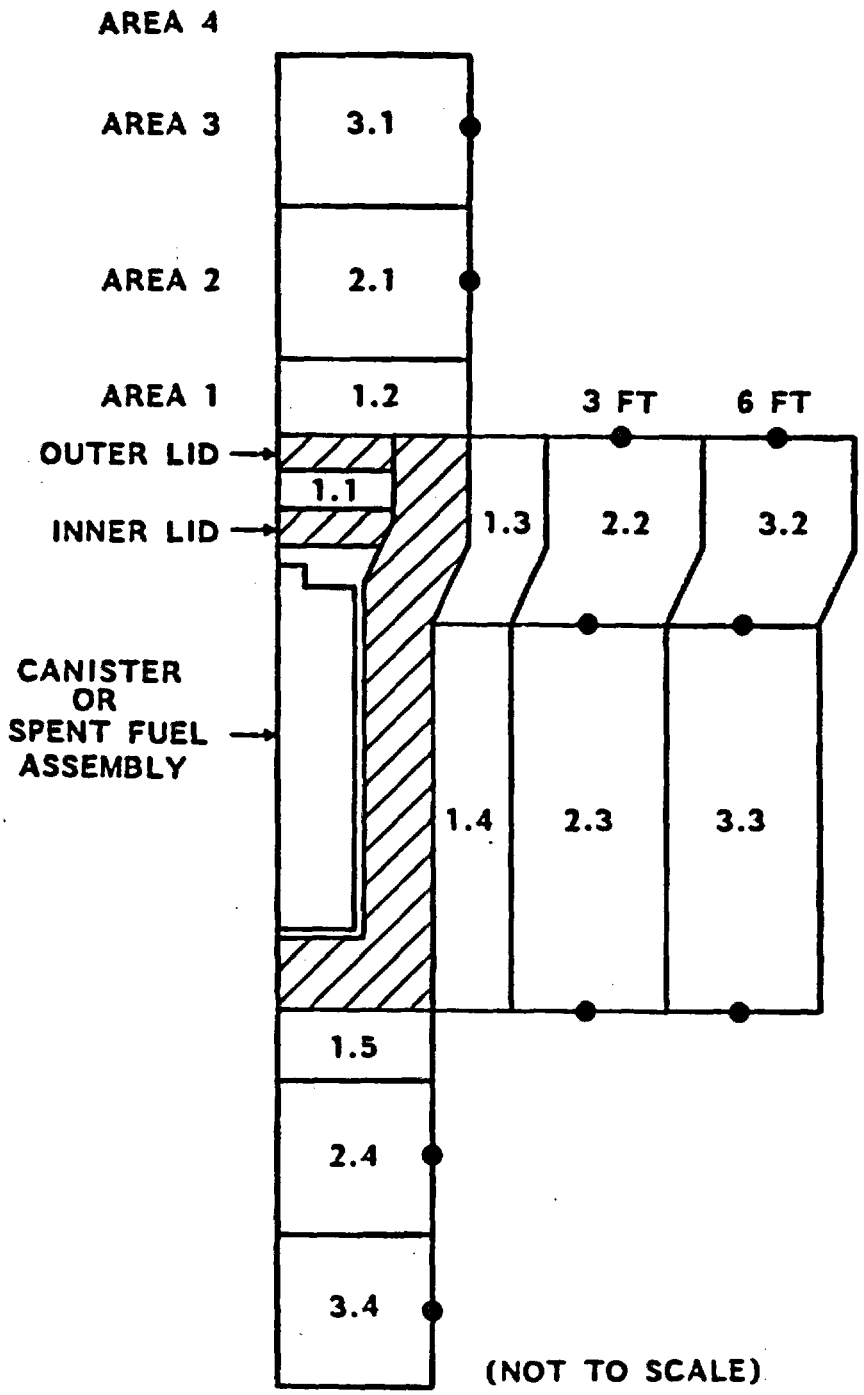

Figure 3-1. Exposure Areas for a Generic Shipping Cask

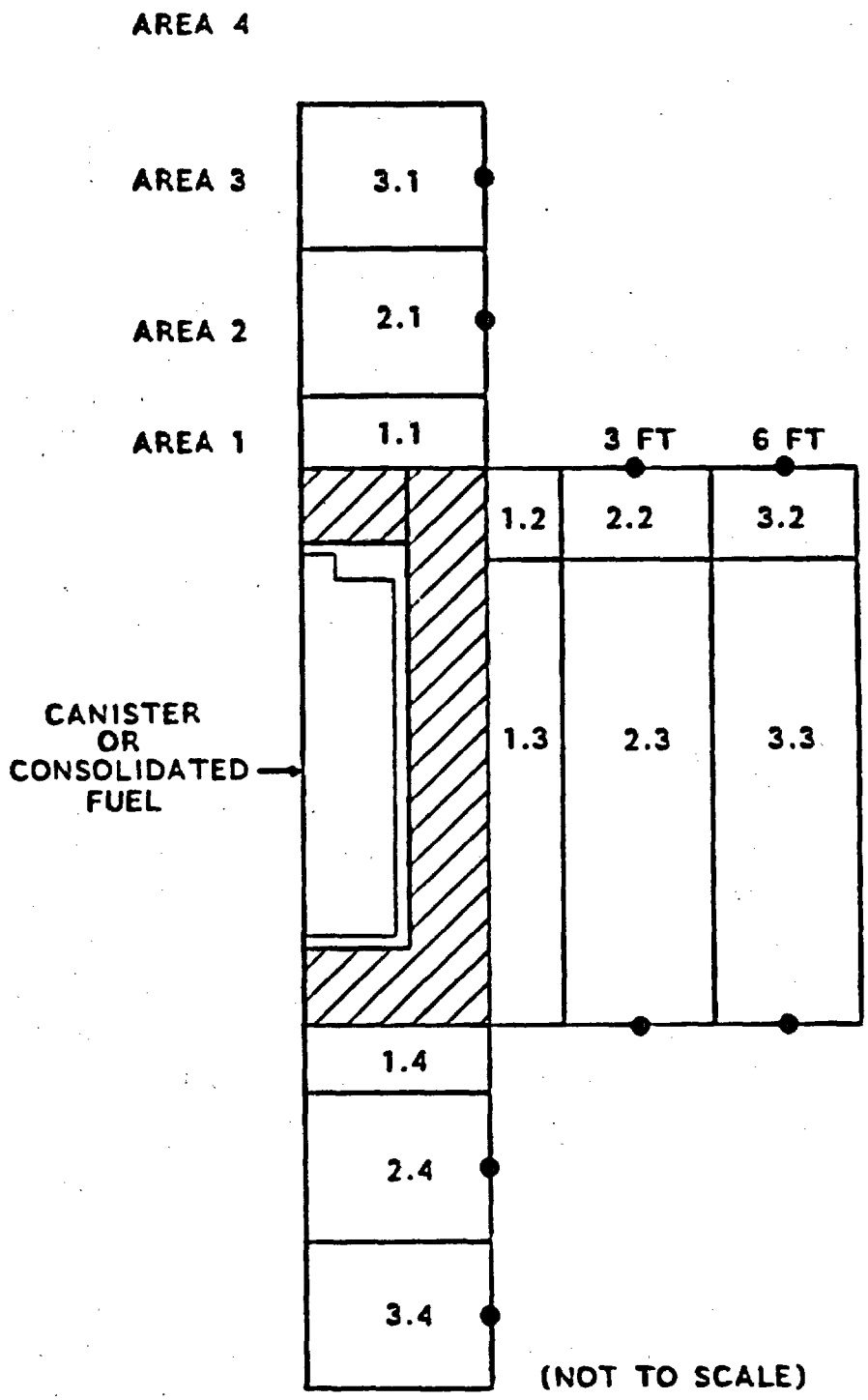

Figure 3-2. Exposure Areas for a Generic Facility Cask

3.1 Dose Rate Maps for Shipping Casks

3.1.1 Spent Fuel

Dose rate calculations for shipping casks containing spent fuel assemblies have been performed using the three-dimensional point kernal computer code, PATH. The self-shield effect is considered in the PATH calculations. Results indicate that the radiation level for a legal weight truck (LWT) shipping cask containing a PWR assembly is the highest among those for casks containing PWR SFAs or BWR SFAs. Consequently, the dose map for a LWT cask containing a PWR SFA is used for worker exposure analysis in this report (Wan and Schneringer, 1983).

Dose rates for the sub-areas around an SFA cask are shown in Figure 3-3. For convenience in calculating worker exposure from operations times, the unit of dose rate used in this report is mrem/min rather than the conventional mrem/hr.

3.1.2 High-Level Waste

Dose rate calculations for shipping casks containing high-level waste have also been performed using a computer code, PATH. Results indicate that the radiation level for a rail shipping cask containing five DHLW canisters is the highest among casks containing DHLW or CHLW. Consequently, the dose map for a rail cask containing DHLW canisters is used for worker exposure analysis in this report (Wan and Schneringer, 1983).

Figure 3-4 shows dose rates for HLW cask sub-areas.

3.2 Dose Rate Maps for Facility Casks

Facility casks to be used in the repository operations are currently being designed. For the purpose of this analysis, the dose map for a generic facility cask was estimated by combining dose maps for SFA (LWT, PWR) and HLW (rail, DHLW).

Dose rates for the different facility cask sub-areas are shown in Figure 3-5.

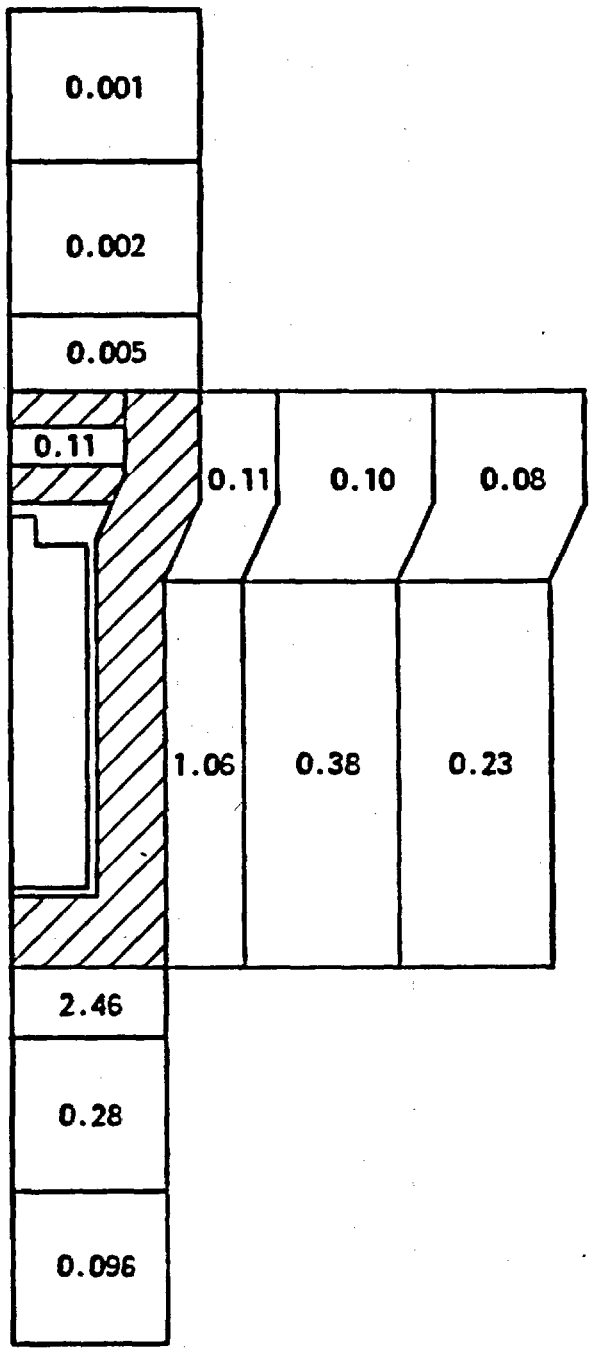

Figure 3-3. Dose Rate Map for a Spent Fuel Assembly Cask (mrem/min)

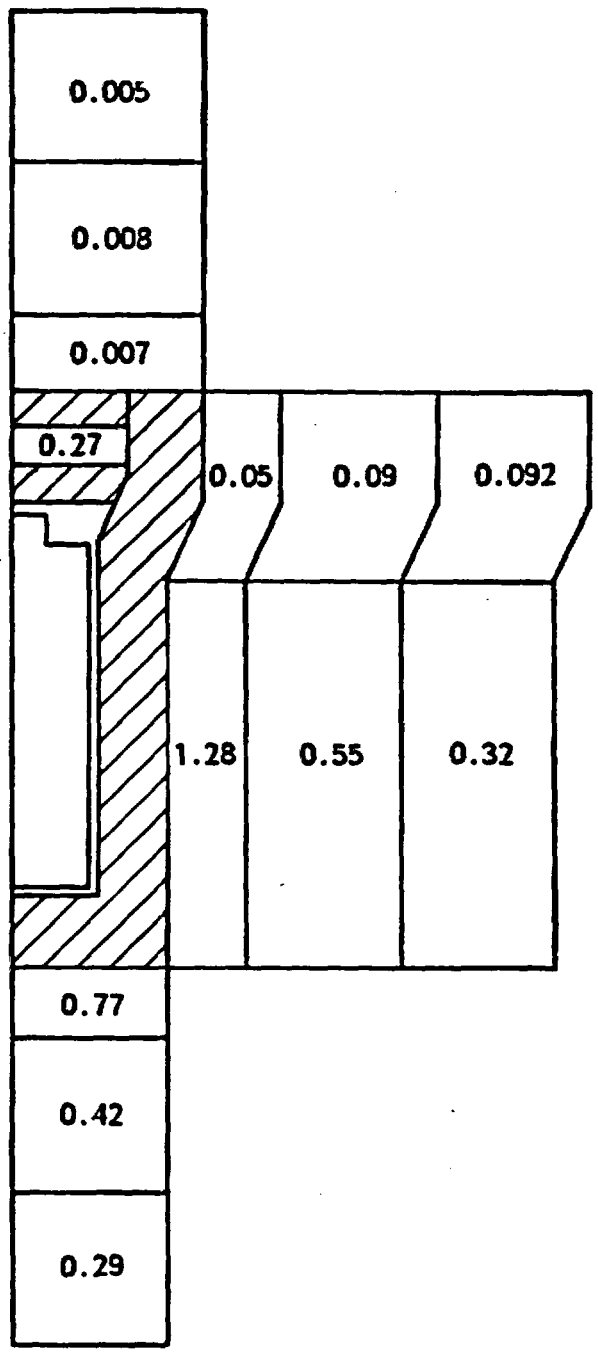

Figure 3-4. Dose Rate Map for a High-Level Waste Cask (mrem/min)

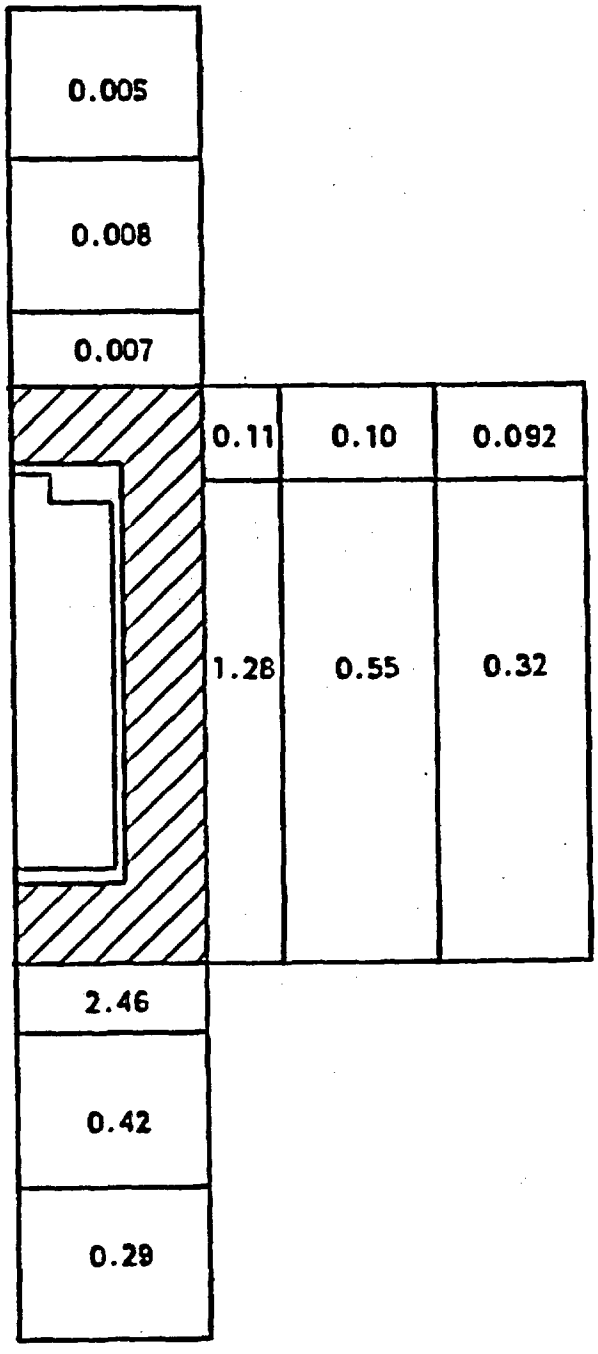

Figure 3-5. Dose Rate Map for a Facility Cask (mrem/min)

4.0 OCCUPATIONAL DOSE

The list of operations contained in this section was developed from the "NNWSI Repository Operations Plan, Volume I" (Dennis, et al., 1983), a preconceptual operations description for the Yucca Mountain repository. Individual operations are listed for spent fuel and high-level waste, shaft and ramp access, vertical and horizontal emplacement, and vertical and horizontal retrieval.

The operating crews for waste operations tasks include area supervisors (e.g., receival officer, hot cell officer, emplacement officer, and retrieval officer) and crew members (i.e., one or more operators, a radiation monitor, and a quality control inspector). One supervisor, one radiation monitor, and one quality control inspector are assumed to supervise and monitor the work of one or more operators involved in each of several phases of individual tasks.

Table 4-1 lists the assigned crew number and crew member abbreviations and titles for each waste operation and task. Dose map sub-areas, and times of exposure are listed for operations and crew member tasks in Tables 4-2 through 4-11. Operations which are assumed to occur at the same time are listed and labeled as parallel (P) operations. The estimated exposure for crew members was developed from the dose rate maps for waste casks and canisters presented in Section 3. It was also assumed that crew members performing remote handling (RT) of spent fuel assemblies and high-level waste canisters and facility transport operations (TR) for facility casks in the repository would be exposed to dose rates of 0.01 and 0.005 mrem/min (1.0 and 0.5 rem/yr) respectively. Background (BG) exposure for facility crew members was assumed to be 0.001 mrem/min (0.1 rem/yr).

The number of workers for each crew member task was estimated from the annual cask and canister receiving, handling and packaging, emplacement, and retrieval numbers (Tables 4-12 and 4-13) and their respective operation times (Tables 4-14, 4-15, 4-16, and 4-17). It is assumed that the workers performing crew member tasks will work 6-hr days (8-hr days minus suit-up, travel to task site, and break time), 250 days/yr for 1,500 hr/yr. Table 4-18 lists the crew member worker numbers.

TABLE 4-1

OPERATIONS IDENTIFICATION AND ABBREVIATIONS

Operations	Crew Number	Crew Member		
1.0 Receiving (R):	1.1 Crew R1 - Receiving Carrier at Gate	R1G	-	Guard
		R1RM	-	Radiation monitor
		R1QC	-	Quality control
		R1OP	-	Operator driver
	1.2 Crew R2 - Placing Carrier into Process	R2RO	-	Receiving officer
		R2D	-	Driver
		R2OP	-	Operator
		R2QC	-	Quality control
		R2RM	-	Radiation monitor
	1.3 Crew R3 - Unloading Preparation	R3RM	-	Radiation monitor
		R3OP	-	Operator
2.0 Handling and Packaging (HP):	2.1 Crew HP1 - Cask Unloading	HP1HO	-	Hot cell officer
		HP1OP	-	Operator
	2.2 Crew HP2 - Spent Fuel Consolidation	HP2HO	-	Hot cell officer
		HP2OP	-	Operator
		HP2RM	-	Radiation monitor
		HP2QC	-	Quality control
	2.3 Crew HP2 - Moving HLW to Surface Surge Storage Facility	HP2OP	-	Operator
		HP2RM	-	Radiation monitor
		HP2QC	-	Quality control
3.0 Surface Storage to Emplacement Horizon:				
3.1 Shaft Access (SA);	3.1.1 Crew SA1 - Surge Surface Storage	SA1SO	-	Storage officer
		SA1OP	-	Operator
		SA1RM	-	Radiation monitor
	3.1.2 Crew SA2 - Shaft Access	SA2OP	-	Operator
	3.1.3 Crew SA3 - Emplacement Horizon	SA3OP	-	Operator
		SA3D	-	Driver
3.2 Ramp Access (RA);	3.2.1 Crew RA1 - Surge Surface Storage	RA1SO	-	Storage officer
		RA1OP	-	Operator
	3.2.2 Crew RA2 - Transporter	RA2OP	-	Operator
		RA2RM	-	Radiation monitor
		RA2D	-	Driver

TABLE 4-1

OPERATIONS IDENTIFICATION AND ABBREVIATIONS
(continued)

Operations	Crew Number		Crew Member		
4.0 Emplacement:					
4.1 Vertical Emplacement (VE);	4.1.1	Crew VE1 - Preparation for Waste Emplacement	VE1EO	-	Emplacement officer
			VE1OP	-	Operator
	4.1.2	Crew VE2 - Waste Emplacement	VE2OP	-	Operator
	4.1.3	Crew VE1 - Emplacement Hole Closure	VE1OP	-	Operator
			VE1RM	-	Radiation monitor
			VE1QC	-	Quality control
4.2 Horizontal Emplacement (HE);	4.2.1	Crew HE1 - Preparation for Waste Emplacement	HE1EO	-	Emplacement officer
			HE1OP	-	Operator
			HE1QC	-	Quality control
	4.2.2	Crew HE2 - Waste Emplacement	HE2OP	-	Operator
	4.2.3	Crew HE1 - Emplacement Hole Closure	HE1OP	-	Operator
			HE1RM	-	Radiation monitor
			HE1QC	-	Quality control
5.0 Retrieval:					
5.1 Vertical Retrieval (VR);	5.1	Crew VR1 - Preparation for Waste Retrieval	VR1RO	-	Retrieval officer
			VR1RM	-	Radiation monitor
			VR1OP	-	Operator
			VR1QC	-	Quality control
	5.1.2	Crew VR2 - Waste Package Retrieval	VR2OP	-	Operator
	5.1.3	Crew VR1 - Retrieval Hole Closure	VR1OP	-	Operator
			VR1RM	-	Radiation monitor
			VR1QC	-	Quality control
5.2 Horizontal Retrieval (HR);	5.2.1	Crew HR1 - Preparation for Waste Retrieval	HR1RO	-	Retrieval officer
			HR1RM	-	Radiation monitor
			HR1OP	-	Operator
			HR1QC	-	Quality control
	5.2.2	Crew HR2 - Waste Package Retrieval	HR2OP	-	Operator
	5.2.3	Crew HR1 - Retrieval Hole Closure	HR1OP	-	Operator
			HR1RM	-	Radiation monitor
			HR1QC	-	Quality control

TABLE 4-1

OPERATIONS IDENTIFICATION AND ABBREVIATIONS (concluded)

Operations	Crew Number		Crew Member		
6.0 Ramp Retrieval (RA), Handling and Packaging (HP), and Shipping (S):	6.1	Crew RA2 - Transporter	RA2D	-	Driver
			RA2RM	-	Radiation monitor
			RA2OP	-	Operator
	6.2	Crew RA1 - Surface Surge Storage	RA1SO	-	Storage officer
			RA1OP	-	Operator
	6.3	Crew HP2 - Waste Package In Surface Surge Storage	HP2OP	-	Operator
			HP2QC	-	Quality control
			HP2RM	-	Radiation monitor
	6.4	Crew HP1 - Cask Loading	HP1HO	-	Hot cell officer
			HP1OP	-	Operator
	6.5	Crew S3 - Cask Preparation	S3OP	-	Operator
	6.6	Crew S2 - Carrier Loading	S2RO	-	Receiving officer
			S2RM	-	Radiation monitor
			S2OP	-	Operator
			S2QC	-	Quality control
			S2D	-	Driver
	6.7	Crew S1 - Shipping Carrier	S1OP	-	Operator driver
			S1RM	-	Radiation monitor
			S1QC	-	Quality control
			S1G	-	Guard

The total crew member exposure for spent fuel, high-level waste, and facility operations (Tables 4-19, 4-20, 4-21, and 4-22) were calculated from the individual crew member exposure and the number of casks or canisters handled, emplaced, and/or retrieved.

4.1 Receiving Operations

4.1.1 Spent Fuel

It is assumed that wet loading of spent fuel assemblies will be employed by the shippers (at reactor sites), shipments will be dry, and surface temperatures of the transportation packages will meet NRC/DOT transportation requirements. All repository procedures for handling spent fuel are based on dry handling without special provisions for cooling. The spent fuel receiving procedures are listed in Table 4-2.

4.1.2 High-Level Waste

It is assumed that dry loading of HLW canisters will be employed by the shippers and that shipment will be on a dry basis. Surface temperatures of the transportation packages are assumed to meet NRC/DOT transportation requirements. All repository procedures for handling HLW are based on dry handling without special provisions for cooling. The HLW receiving procedures are listed in Table 4-3.

P - Parallel operation
BG - Background operation
RT - Remote operation
TR - Transport operation

TABLE 4-2

RECEIVING OPERATIONS FOR SPENT FUEL

Note: All operation times are estimates.

Operation Description	Operations Time (min) Ind.	Operations Time (min) Cum.	Crew Number	Crew Member	Exposure: Time (min)	Exposure: Area Number	Exposure: Area Dose Rate (mrem/min)	Exposure: Crew Member Dose (mrem) Ind.	Exposure: Crew Member Dose (mrem) Total	Exposure: Crew Member Dose (mrem) Cum.
1.0 RECEIVING CARRIER AT GATF:			R1							
1.1 Check Shipping Papers;										
1.1.1 Confirm identity of carrier	5			R1G	5.0	4.0 (BG)	0.001	0.005	0.005	0.005
1.1.2 Confirm identity of cask	P									
	5	5								
1.2 Inspect for Radiation Levels;										
1.2.1 Measure penetrating radiation	10			R1RM	10.0	4.0 (BG)	0.001	0.01	0.01	0.01
1.2.2 Compare with shippers' values and DOT limits	5									
1.2.3 Certify compliance	P									
	15	20								
1.3 Inspect for Physical Damage;										
1.3.1 Carrier	5			R1QC	1.0	2.1	0.002	0.002		
					1.0	2.3	0.38	0.38		
					1.0	2.4	0.28	0.28		
1.3.2 Security seals and personnel barrier	5				0.5	2.1	0.002	0.001		
					0.5	2.3	0.38	0.19		
					1.0	2.4	0.28	0.28		
1.3.3 Cask	5				0.5	1.2	0.005	0.0025		
					0.5	1.4	1.06	0.53		
					0.5	1.5	2.46	1.23		
					0.5	3.1	0.001	0.0005		
					0.5	3.3	0.23	0.115		
					0.5	3.4	0.096	0.048	3.059	3.06
1.3.4 Acceptance of shipment	P									
	15	35								
1.4 Park Carrier in Incoming Parking;										
1.4.1 If OK, park in regular slot	10			R1OP	5.0	4.0 (BG)	0.001	0.005	0.005	0.005
1.4.2 If suspect, park in suspect slot	P									
1.4.3 Notify operations manager	5									
	15	50								
2.0 PLACING CARRIER INTO PROCESS:			R2							
2.1 Preparation for Cask Unloading;				R2RO	110.0	4.0 (BG)	0.001	0.11	0.11	0.11
2.1.1 Move carrier to process start station	10			R2D	5.0	4.0 (BG)	0.001	0.005	0.005	0.005
2.1.2 Wash down exterior, dry before moving	10			R2OP	1.0	3.1	0.001	0.001		
					1.0	3.2	0.08	0.08		
					1.0	3.3	0.23	0.23		
					1.0	3.4	0.096	0.096	0.41	

TABLE 4-2

RECEIVING OPERATIONS FOR SPENT FUEL
(continued)

Operation Description	Operations Time (min) Ind.	Operations Time (min) Cum.	Crew Number	Crew Member	Exposure Time (min)	Exposure Area Number	Exposure Area Dose Rate (mrem/min)	Exposure Crew Member Dose (mrem) Ind.	Exposure Crew Member Dose (mrem) Total	Exposure Crew Member Dose (mrem) Cum.
2.1.3 Move carrier ahead for detailed inspection	5			R2OP	2.0	4.0 (BG)	0.001	0.002	0.002	
2.1.4 Remove barrier seals	5			R2QC	0.5	2.1	0.002	0.001		
					1.0	2.3	0.38	0.38		
					0.5	2.4	0.28	0.14	0.53	
2.1.5 Pull barrier back full open	10			R2OP	0.5	2.1	0.02	0.01		
					0.5	2.4	0.28	0.14	0.15	
	40	40								
2.2 Inspect for Radiation Levels:										
2.2.1 Measure penetrating radiation	30			R2RM	1.0	2.1	0.002	0.002		
2.2.2 Measure alpha contamination	P				1.0	2.3	0.38	0.38		
2.2.3 Temporarily fix alpha	P				1.0	2.4	0.28	0.28		
					1.0	1.2	0.005	0.005		
					1.0	1.4	1.06	1.06		
					1.0	1.5	2.46	2.46		
					0.5	1.2	0.005	0.003		
					0.5	1.4	1.06	0.53		
					0.5	1.5	2.46	1.23	5.95	5.95
	30	70								
2.3 Inspect for Physical Damage:										
2.3.1 Carrier	10			R2QC	2.0	3.1	0.001	0.002		
					1.0	3.3	0.23	0.23		
					2.0	3.4	0.096	0.192		
2.3.2 Barrier and hardware	10				2.0	2.1	0.002	0.004		
					1.0	2.3	0.38	0.38		
					2.0	2.4	0.28	0.56		
2.3.3 Cask	10				1.0	2.1	0.002	0.002		
					2.0	2.3	0.38	0.76		
					1.0	2.4	0.28	0.28	2.41	2.94
2.3.4 Certify received condition	P									
	30	100								
2.4 Removal of Cask from Carrier:										
2.4.1 Move carrier to trans lock	10			R2OP	1.0	2.1	0.002	0.002		
2.4.2 Release tiedowns	10				2.0	1.3	0.11	0.22		
					2.0	1.4	1.06	2.12		
2.4.3 Attach yoke to cask	5				3.0	1.2	0.005	0.015		
2.4.4 Lift cask to vertical	10				5.0	4.0 (BG)	0.001	0.005		
2.4.5 Transfer cask to cart	10				5.0	4.0	0.001	0.005		
2.4.6 Remove yoke	5				2.0	1.2	0.005	0.01	2.38	2.95
	50	150								

TABLE 4-2

RECEIVING OPERATIONS FOR SPENT FUEL
(continued)

Operation Description	Operations Time (min) Ind.	Operations Time (min) Cum.	Crew Number	Crew Member	Exposure Time (min)	Exposure Area Number	Exposure Area Dose Rate (mrem/min)	Exposure Crew Member Dose (mrem) Ind.	Exposure Crew Member Dose (mrem) Total	Exposure Crew Member Dose (mrem) Cum.
3.0 UNLOADING PREPARATION:			R3							
3.1 Preparation for Cask Unloading:										
3.1.1 Move cask to prep area	10			R3OP	2.0	2.3	0.38	0.76	0.76	
3.1.2 Connect gas sampler	10			R3RM	3.0	1.3	0.11	0.33	0.33	
3.1.3 Sample interspace gas	10									
3.1.4 Remove outer lid	40			R3OP	35.0	1.3	0.11	3.85	3.85	
3.1.5 Connect gas sampler	10			R3RM	3.0	1.1	0.11	0.33	0.33	0.66
3.1.6 Sample cavity gas	10									
3.1.7 Vent cavity	15									
3.1.8 Loosen bolts on inner lid	40			R3OP	35.0	1.1	0.11	3.85		
3.1.9 Attach cask-to-hot cell adapter	15				10.0	1.3	0.11	1.1	4.95	
	160	160								
3.2 Attach Cask to Hot Cell;										
3.2.1 Move cask to unload lock	20			R3OP	4.0	4.0	0.01	0.04		
3.2.2 Position cask under port	10				2.0	3.3	0.23	0.46		
3.2.3 Attach cask to port	10				2.0	3.3	0.23	0.46		
3.2.4 Verify seal	5				1.0	3.3	0.23	0.23	1.19	
	45	205								
3.3 Removal of Cask from Hot Cell;										
3.3.1 Remove cask from port	10			R3OP	2.0	4.0	0.001	0.002		
3.3.2 Remove cask-to-hot cell adapter	20				10.0	4.0	0.001	0.01	0.012	10.76
	30	235								
4.0 RETURN OF EMPTY CASK:										
4.1 Cask Assembly;			R3							
4.1.1 Move cask to return area	20									
4.1.2 Decon cask	30									
4.1.3 Install inner lid	10									
4.1.4 Torque bolts	10									
4.1.5 Install outer lid	10									
4.1.6 Torque belts	10									
4.1.7 RAD survey assembled cask	30									
4.1.8 Release cask	P									
	120	120								
4.2 Return Cask to Carrier;			R2							
4.2.1 Move carrier to return area	10									
4.2.2 Attach yoke to cask	5									
4.2.3 Move cask to carrier	10									
4.2.4 Lower cask to horizontal position	10									
4.2.5 Attach tiedowns	20									
4.2.6 Re-install personel barrier (leave retracted)	20									
	75	195								

TABLE 4-2

RECEIVING OPERATIONS FOR SPENT FUEL
(concluded)

Operation Description	Operations Time (min) Ind.	Operations Time (min) Cum.	Crew Number	Crew Member	Exposure Time (min)	Exposure Area Number	Exposure Area Dose Rate (mrem/min)	Exposure Crew Member Dose (mrem) Ind.	Exposure Crew Member Dose (mrem) Total	Exposure Crew Member Dose (mrem) Cum.
4.3 Transfer of Transport Unit:			R1							
4.3.1 Move to inspection area	10									
4.3.2 Perform final inspection	30									
4.3.3 Perform final radiation survey	P									
4.3.4 Close personnel barrier	10									
4.3.5 Install seals	20									
4.3.6 Ceritfy release	10									
4.3.7 Move to outgoing parking	10									
	90	285								

P - Parallel operation
BG - Background operation
RT - Remote operation
TR - Transport operation

TABLE 4-3

RECEIVING OPERATIONS FOR HIGH-LEVEL WASTE

Note: All operation times are estimates.

Operation Description	Operations Time (min) Ind.	Operations Time (min) Cum.	Crew Number	Crew Member	Exposure Time (min)	Exposure Area Number	Exposure Area Dose Rate (mrem/min)	Exposure Crew Member Dose (mrem) Ind.	Exposure Crew Member Dose (mrem) Total	Exposure Crew Member Dose (mrem) Cum.
1.0 RECEIVING CARRIER AT GATE:			R1							
1.1 Check Shipping Papers;										
1.1.1 Confirm I.D. of carrier	5			R1G	5.0	4.0 (BG)	0.001	0.005	0.005	0.005
1.1.2 Confirm I.D. of cask	P									
	5	5								
1.2 Inspect for Radiation Levels;										
1.2.1 Measure penetrating radiation	10			R1RM	10.0	4.0 (BG)	0.001	0.01	0.01	0.01
1.2.2 Compare with shippers values and DOT limits	5									
1.2.3 Certify compliance	P									
	15	20								
1.3 Inspect for Physical Damage;										
1.3.1 Security seals	5			R1QC	1.0	2.1	0.008	0.008		
					1.0	2.3	0.55	0.55		
					1.0	2.4	0.42	0.42		
1.3.2 Cask and personnel barrier	5				0.5	2.1	0.008	0.004		
					0.5	2.3	0.55	0.275		
					1.0	2.4	0.42	0.42		
1.3.3 Carrier	5				0.5	1.2	0.007	0.004		
					0.5	1.4	1.28	0.64		
					0.5	1.5	0.77	0.385		
					0.5	3.1	0.005	0.0025		
					0.5	3.3	0.32	0.16		
					0.5	3.4	0.29	0.145	3.02	3.02
1.3.4 Acceptance of shipment	P									
	15	35								
1.4 Park Carrier in Incoming Parking;										
1.4.1 If OK, park in regular slot	10			R1OP	5.0	4.0 (BG)	0.001	0.005	0.005	0.005
1.4.2 If suspect, park in suspect slog	P									
1.4.3 Notify operations manager	5									
	15	50								
2.0 PLACING CARRIER INTO PROCESS:			R2	R2RO	110.0	4.0 (BG)	0.001	0.11	0.11	0.11
2.1 Preparation for Cask Unloading;										
2.1.1 Move carrier to process station	10			R2D	5.0	4.0 (BG)	0.001	0.005	0.005	0.005
2.1.2 Wash down and dry exterior	10			R2OP	1.0	3.1	0.005	0.005		
					1.0	3.2	0.092	0.092		
					1.0	3.3	0.32	0.32		
					1.0	3.4	0.29	0.29	0.71	

TABLE 4-3

RECEIVING OPERATIONS FOR HIGH-LEVEL WASTE
(continued)

Operation Description	Operations Time (min) Ind.	Operations Time (min) Cum.	Crew Number	Crew Member	Exposure Time (min)	Exposure Area Number	Exposure Area Dose Rate (mrem/min)	Exposure Crew Member Dose (mrem) Ind.	Exposure Crew Member Dose (mrem) Total	Exposure Crew Member Dose (mrem) Cum.
2.1.3 Move carrier ahead for detailed inspection	5			R2OP	2.0	4.0 (BG)	0.001	0.004	0.004	
2.1.4 Remove barrier seals	5			R2OC	0.5	2.1	0.008	0.004		
					1.0	2.3	0.55	0.55		
					0.5	2.4	0.42	0.21	0.76	
2.1.5 Pull barrier back full open	10			R2OP	0.5	2.1	0.008	0.004		
					0.5	2.4	0.42	0.21	0.21	
	40	40								
2.2 Inspect for Radiation Levels;										
2.2.1 Measure penetrating radiation	30			R2RM	1.0	2.1	0.008	0.008		
2.2.2 Measure alpha contamination	P				1.0	2.3	0.55	0.55		
2.2.3 Temporarily fix alpha	P				1.0	2.4	0.42	0.42		
					1.0	1.2	0.007	0.007		
					1.0	1.4	1.28	1.28		
					1.0	1.5	0.77	0.77		
					0.5	1.2	0.007	0.004		
					0.5	1.4	1.28	0.64		
					0.5	1.5	0.77	0.385	4.06	4.06
	30	70								
2.3 Inspect for Physical Damage;										
2.3.1 Carrier	10			R2OC	2.0	3.1	0.005	0.01		
					1.0	3.3	0.32	0.32		
					2.0	3.4	0.29	0.58		
2.3.2 Barrier and hardware	10				2.0	2.1	0.008	0.016		
					1.0	2.3	0.55	0.55		
					2.0	2.4	0.42	0.84		
2.3.3 Cask	10				1.0	2.1	0.008	0.008		
					2.0	2.3	0.55	1.1		
2.3.4 Certify received condition	P				1.0	2.4	0.42	0.42	3.84	4.37
	30	100								
2.4 Removal of Cask from Carrier;										
2.4.1 Move carrier to trans lock	10			R2OP	1.0	2.1	0.008	0.008		
2.4.2 Release tiedowns	10				2.0	1.3	0.05	0.10		
					2.0	1.4	1.28	2.56		
2.4.3 Attach yoke to cask	5				3.0	1.2	0.007	0.021		
2.4.4 Lift cask to vertical	10				5.0	4.0 (BG)	0.001	0.005		
2.4.5 Transfer cask to cart	10				5.0	4.0	0.001	0.005		
2.4.6 Remove yoke	5				2.0	1.2	0.007	0.014	2.71	3.64
	50	150								

TABLE 4-3

RECEIVING OPERATIONS FOR HIGH-LEVEL WASTE
(continued)

Operation Description	Operations Time (min) Ind.	Operations Time (min) Cum.	Crew Number	Crew Member	Exposure Time (min)	Exposure Area Number	Exposure Area Dose Rate (mrem/min)	Exposure Crew Member Dose (mrem) Ind.	Exposure Crew Member Dose (mrem) Total	Exposure Crew Member Dose (mrem) Cum.
3.0 UNLOADING PREPARATION:			R3							
3.1 Preparation for Cask Unloading:										
3.1.1 Move cask to prep area	10			R3OP	2.0	2.3	0.55	1.1	1.1	
3.1.2 Connect gas sampler	10			R3RM	3.0	1.3	0.05	0.15	0.15	
3.1.3 Sample interspace gas	10									
3.1.4 Remove outer lid	40			R3OP	35.0	1.3	0.05	1.75	1.75	
3.1.5 Connect gas sampler	10			R3RM	3.0	1.1	0.27	0.81	0.81	0.96
3.1.6 Sample cavity gas	10									
3.1.7 Vent cavity	15									
3.1.8 Loosen bolts on inner lid	40			R3OP	35.0	1.1	0.27	9.45		
3.1.9 Attach cask-to-hot cell adapter	15				10.0	1.3	0.05	0.5	9.95	
	160	160								
3.2 Attach Cask to Hot Cell;										
3.2.1 Move cask to hot cell lock	20			R3OP	4.0	4.0	0.01	0.04		
3.2.2 Position cask under port	10				2.0	3.3	0.32	0.64		
3.2.3 Attach cask to port	10				2.0	3.3	0.32	0.64		
3.2.4 Verify seal	5				1.0	3.3	0.32	0.32	1.64	
	45	205								
3.3 Removal of Cask from Hot Cell;										
3.3.1 Remove cask from port	10			R3OP	2.0	4.0 (BG)	0.001	0.002		
3.4.5 Remove cask-to-hot cell adapter	20				10.0	4.0	0.001	0.01	0.012	14.45
	30	235								
4.0 RETURN OF EMPTY CASK:										
4.1 Cask Assembly;			R3							
4.1.1 Move cask to return area	20									
4.1.2 Decontaminate cask	30									
4.1.3 Replace inner lid	10									
4.1.4 Tighten bolts	10									
4.1.5 Replace outer lid	10									
4.1.6 Tighten bolts	10									
4.1.7 RAD survey assembled cask	30									
4.1.8 Release cask	P									
	120	120								
4.2 Return Cask to Carrier;			R2							
4.2.1 Move carrier to return area	10									
4.2.2 Attach yoke to cask	5									
4.2.3 Transfer cask to carrier	10									
4.2.4 Lower cask to horizontal position	10									
4.2.5 Remove yoke	5									
4.2.6 Attach tiedowns	20									
4.2.7 Close personnel barrier	20									
	80	200								

TABLE 4-3

RECEIVING OPERATIONS FOR HIGH-LEVEL WASTE
(concluded)

Operation Description	Operations Time (min) Ind.	Operations Time (min) Cum.	Crew Number	Crew Member	Exposure Time (min)	Exposure Area Number	Exposure Area Dose Rate (mrem/min)	Exposure Crew Member Dose (mrem) Ind.	Exposure Crew Member Dose (mrem) Total	Exposure Crew Member Dose (mrem) Cum.
4.3 Transfer of Carrier:			R1							
4.3.1 Move to inspection area	10									
4.3.2 Perform final inspection	30									
4.3.3 Perform final RAD survey	P									
4.3.4 Attach seals	10									
4.3.5 Certify release	10									
4.3.6 Move to outgoing parking	10									
	70	270								

4.2 Handling and Packaging Operations

4.2.1 Spent Fuel

The SFAs are assumed to be in interim storage racks in the unloading hot cell. The operations described in Table 4-4 for consolidation of spent fuel are patterned after the work described in the Allied General Nuclear Services report "Spent Fuel Disassembly and Canning Program at the Barnwell Nuclear Fuel Plant," AGNS-47921-2.0-19. The spent fuel canisters will be taken to a surface surge storage facility after consolidation.

4.2.2 High-Level Waste

The HLW packages are assumed to be in interim storage racks in the unloading hot cell. If any packages are found to be damaged during the unloading operations, a separate set of procedures (similar to those for packaging spent fuel rods) will be followed to "overpack" the damaged HLW packages. After inspection, the HLW canisters will be taken to a surface surge-storage facility. Table 4-5 describes the handling of HLW canisters.

P - Parallel operation
RT - Remote operation

TABLE 4-4

HANDLING AND PACKAGING OPERATIONS FOR SPENT FUEL

Note: All operation times are estimates.

Operation Description	Operations Time (min) Ind.	Operations Time (min) Cum.	Crew Number	Crew Member	Exposure Time (min)	Exposure Area Number	Exposure Area Dose Rate (mrem/min)	Exposure Crew Member Dose (mrem) Ind.	Exposure Crew Member Dose (mrem) Total	Exposure Crew Member Dose (mrem) Cum.
1.0 CASK UNLOADING:			HP1							
1.1 Waste Package Removal;				HP1HO	110.0	4.0 (RT)	0.01	1.1	1.1	1.1
1.1.1 Open hot cell port	10			HP1OP	10.0	4.0 (RT)	0.01	0.1		
1.1.2 Remove inner cask lid	10				10.0	4.0	0.01	0.1		
1.1.3 Inspect lid. seal surface	10				10.0	4.0	0.01	0.1		
1.1.4 Inspect cask contents	10				10.0	4.0	0.01	0.1		
1.1.5 Log pertinent facts	10				10.0	4.0	0.01	0.1		
1.1.6 Remove first waste package	10				10.0	4.0	0.01	0.1		
1.1.7 Repeat until cask is empty	30				30.0	4.0	0.01	0.3	0.9	
	90	90								
1.2 Cask Closure;										
1.2.1 Clean cask seal surface	20			HP1OP	20.0	4.0 (RT)	0.01	0.2		
1.2.2 Replace inner lid	10				10.0	4.0	0.01	0.1		
1.2.3 Close unloading port	10				10.0	4.0	0.01	0.1	0.4	1.3
	40	130								
2.0 SPENT FUEL ASSEMBLY CONSOLIDATION:			HP2							
2.1 Stripping Rods from Hardware;				HP2HO	175.0	4.0 (RT)	0.01	1.75	1.75	1.75
2.1.1 Move SFA to feed table	20			HP2OP	20.0	4.0 (RT)	0.01	0.2		
2.1.2 Clamp into position	10				10.0	4.0	0.01	0.1		
2.1.3 Cut through guide tubes	20				20.0	4.0	0.01	0.2		
2.1.4 Drop end fitting to waste chute	10				10.0	4.0	0.01	0.1		
2.1.5 Grip one row of rods	5				5.0	4.0	0.01	0.05		
2.1.6 Pull rods into transfer trough	15				15.0	4.0	0.01	0.15		
2.1.7 Repeat 2.1.5 and 2.1.6 for each row	70				70.0	4.0	0.01	0.7	1.5	
	150	150								
2.2 Discarding of Hardware;										
2.1.1 Cut skeleton into sections	40			HP2OP	40.0	4.0 (RT)	0.01	0.4		
2.1.2 Drop sections into waste chute	20				20.0	4.0	0.01	0.2	0.6	
2.2.3 Compact and package for disposal	P									
	60	210								
2.3 Placing Rods into Waste Container;										
2.3.1 Move rods from transfer trough (2.1.6) to rod trough loader	10			HP2OP	10.0	4.0 (RT)	0.01	0.1		
2.3.2 Place rods in waste package	10				10.0	4.0	0.01	0.1		
2.3.3 Repeat 2.3.2 until package is filled	20				20.0	4.0	0.01	0.2	0.4	
	20	250								

TABLE 4-4

HANDLING AND PACKAGING OPERATIONS FOR SPENT FUEL
(concluded)

Operation Description	Operations Time (min) Ind.	Operations Time (min) Cum.	Crew Number	Crew Member	Exposure Time (min)	Exposure Area Number	Exposure Area Dose Rate (mrem/min)	Exposure Crew Member Dose (mrem) Ind.	Exposure Crew Member Dose (mrem) Total	Exposure Crew Member Dose (mrem) Cum.
2.4 Container Closure and Surface Surge Storage:										
2.4.1 Move filled waste package to welding station	10			HP2OP	10.0	4.0 (RT)	0.01	0.1		
2.4.2 Move lid to station	5				5.0	4.0	0.01	0.05		
2.4.3 Clean and inspect mating surfaces	15				15.0	4.0	0.01	0.15		
2.4.4 Perform closure weld	20				20.0	4.0	0.01	0.2		
2.4.5 Inspect weld	20			HP2QC	10.0	4.0	0.01	0.1	0.1	0.1
2.4.6 Certify weld and accept package	P			HP2RM	10.0	4.0	0.01	0.1	0.1	0.1
2.4.7 Move waste package to surge storage	10			HP2OP	10.0	4.0	0.01	0.1	0.6	3.1
	80	330								

P - Parallel operation
RT - Remote operation

TABLE 4-5

HANDLING AND PACKAGING OPERATIONS FOR HIGH-LEVEL WASTE

Note: All operation times are estimates.

Operation Description	Operations Time (min) Ind.	Operations Time (min) Cum.	Crew Number	Crew Member	Exposure Time (min)	Exposure Area Number	Exposure Area Dose Rate (mrem/min)	Exposure Crew Member Dose (mrem) Ind.	Exposure Crew Member Dose (mrem) Total	Exposure Crew Member Dose (mrem) Cum.
1.0 CASK UNLOADING:										
1.1 Waste Package Removal;			HP1	HP1HO	110.0	4.0 (RT)	0.01	1.1	1.1	1.1
1.1.1 Open hot cell port	10			HP1OP	10.0	4.0 (RT)	0.01	0.1		
1.1.2 Remove inner cask lid	10				10.0	4.0	0.01	0.1		
1.1.3 Inspect lid, seal surface	10				10.0	4.0	0.01	0.1		
1.1.4 Inspect cask contents	10				10.0	4.0	0.01	0.1		
1.1.5 Log pertinent facts	10				10.0	4.0	0.01	0.1		
1.1.6 Remove first waste package	10				10.0	4.0	0.01	0.1		
1.1.7 Repeat until cask is empty	20				20.0	4.0	0.01	0.2	0.8	
	80	80								
1.2 Cask Closure;										
1.2.1 Clean cask seal surface	20			HP1OP	20.0	4.0 (RT)	0.01	0.2		
1.2.2 Replace inner lid	10				10.0	4.0	0.01	0.1		
1.2.3 Close unloading port	10				10.0	4.0	0.01	0.1	0.4	1.2
	40	120								
2.0 HLW TO SURFACE SURGE STORAGE:			HP2							
2.1 Moving Acceptable Package;										
2.1.1 Move HLW canister to inspection station	10			HP2OP	10.0	4.0 (RT)	0.01	0.1		
2.1.2 Certify acceptability	20			HP2OC	10.0	4.0	0.01	0.1	0.1	0.1
				HP2RM	10.0	4.0	0.01	0.1	0.1	0.1
2.1.3 Move disposal package to SSSF	10			HP2OP	10.0	4.0	0.01	0.1	0.2	0.2
	40	40								

4.3 Shaft or Ramp Access from Surface Storage to Emplacement Horizon

The waste canisters are in surface surge-storage, available for transfer underground. Two options are being developed for material handling from surface storage to the emplacement horizon and then to the emplacement borehole: 1) use of a vertical shaft for transfer of the facility cask with the waste canister to a transporter at the emplacement horizon; and 2) use of a ramp with the waste canister moved from surface storage into a facility cask, permanently mounted on a transporter, and transported directly to the emplacement borehole. The transfer operations are listed for shaft access in Table 4-6 and for ramp access in Table 4-7.

P - Parallel operation
RT - Remote operation
BG - Background operation
TR - Transport operation

TABLE 4-6

SHAFT ACCESS FROM SURFACE STORAGE TO EMPLACEMENT HORIZON

Note: All operation times are estimates.

Operation Description	Operations Time (min) Ind.	Operations Time (min) Cum.	Crew Number	Crew Member	Exposure Time (min)	Exposure Area Number	Exposure Area Dose Rate (mrem/min)	Exposure Crew Member Dose (mrem) Ind.	Exposure Crew Member Dose (mrem) Total	Exposure Crew Member Dose (mrem) Cum.
1.0 WASTE PACKAGE LOADING:			SA1	SA1SO	105.0	4.0 (RT)	0.01	1.05	1.05	1.05
1.1 Mount facility cask on transfer cart	20									
1.2 Align facility cask and attach to port	10									
1.3 Remove port cover	10									
1.4 Remove facility cask lid	10			SA10P	5.0	4.0 (RT)	0.01	0.05		
1.5 Load waste package	20				10.0	4.0	0.01	0.1		
1.6 Replace facility cask lid	10				10.0	4.0	0.01	0.1		
1.7 Replace port cover	10				5.0	4.0	0.01	0.05		
1.8 Unattach cask from port	10				10.0	4.0 (TR)	0.005	0.05		
1.9 Release facility cask	10			SA1RM	10.0	4.0	0.005	0.05	0.05	0.05
1.10 Move facility cask on transfer cart to shaft	10			SA10P	10.0	4.0	0.005	0.05	0.40	0.40
	120	120								
2.0 FACILTIY CASK SHAFT ACCESS:			SA2							
2.1 Hoist at surface	P									
2.2 Engage "chair" system	10									
2.3 Load facility cask on hoist	20			SA20P	20.0	4.0 (TR)	0.005	0.1		
2.4 Disengage "chair" system	5				5.0	4.0	0.005	0.025		
2.5 Lower to emplacement horizon	5									
2.6 Engage "chair" system	5				5.0	4.0	0.005	0.025		
2.7 Unload facility cask from hoist	20				20.0	4.0	0.005	0.1		
2.8 Move facility cask on transfer cart to transfer station	10				10.0	4.0	0.005	0.05	0.3	0.3
2.9 Remove facility cask from transfer cart, return cart to hoist and surface	P									
	75	75								
3.0 TRANSPORTER AT EMPLACEMENT HORIZON:			SA3							
3.1 Move transporter to transfer station	10									
3.2 Load facility cask on transporter	20			SA30P	20.0	4.0 (TR)	0.005	0.1	0.1	0.1
3.3 Move facility cask to emplacement horizon access point	20			SA3D	20.0	4.0	0.005	0.1	0.1	0.1
	50	50								

TABLE 4-7

RT - Remote operation
TR - Transport operation

RAMP ACCESS FROM SURFACE STORAGE TO EMPLACEMENT HORIZON

Note: All operation times are estimates.

Operation Description	Operations Time (min) Ind.	Operations Time (min) Cum.	Crew Number	Crew Member	Exposure Time (min)	Exposure Area Number	Exposure Area Dose Rate (mrem/min)	Exposure Crew Member Dose (mrem) Ind.	Exposure Crew Member Dose (mrem) Total	Exposure Crew Member Dose (mrem) Cum.
1.0 WASTE PACKAGE LOADING:			RA1	RA1SO	105.0	4.0 (RT)	0.01	1.05	1.05	1.05
1.1 Move transporter with facility cask to surge storage port	20									
1.2 Align facility cask and attach to port	10									
1.3 Remove port cover	10			RA1OP	5.0	4.0 (RT)	0.01	0.05		
1.4 Remove facility cask lid	10				5.0	4.0	0.01	0.05		
1.5 Load waste package	20				10.0	4.0	0.01	0.1		
1.6 Replace facility cask lid	10				5.0	4.0	0.01	0.05		
1.7 Replace port cover	10				5.0	4.0	0.01	0.05	0.30	0.30
	90	90								
2.0 TRANSPORTER RAMP ACCESS:			RA2							
2.1 Unattach transporter facility cask from surge storage port	10			RA2OP	10.0	4.0 (TR)	0.005	0.05	0.05	0.05
2.2 Release transporter	10			RA2RM	10.0	4.0	0.005	0.05	0.05	0.05
2.3 Proceed to ramp	10			RA2D	10.0	4.0	0.005	0.05		
2.4 Move facility cask, down ramp, to emplacement horizon access point	20				20.0	4.0	0.005	0.1	0.15	0.15
	50	50								

4.4 Waste Emplacement

It is assumed that all initial conditions have been met in the waste emplacement area. These conditions include: mining in the emplacement area has been completed, the emplacement drifts are ventilated, all necessary utilities are available, and the emplacement holes are completed and ready for installation of the shield door and other auxillary equipment.

4.4.1 Vertical Emplacement

Vertical waste emplacement is assumed to require the installation and removal of a shield door for each waste canister. Table 4-8 lists the operations for vertical waste emplacement.

4.4.2 Horizontal Emplacement

Horizontal waste emplacement is assumed to accept multiple waste canisters before the shield door is moved to another borehole. Table 4-9 lists the operations for horizontal waste emplacement.

BG - Background operation
TR - Transport operation

TABLE 4-8

VERTICAL EMPLACEMENT OF WASTE

Note: All operation times are estimates.

Operation Description	Operations Time (min) Ind.	Operations Time (min) Cum.	Crew Number	Crew Member	Exposure Time (min)	Exposure Area Number	Exposure Area Dose Rate (mrem/min)	Exposure Crew Member Dose (mrem) Ind.	Exposure Crew Member Dose (mrem) Total	Exposure Crew Member Dose (mrem) Cum.
1.0 PREPARATION FOR WASTE EMPLACEMENT:			VE1	VE1EO	110.0	4.0 (BG)	0.001	0.11	0.11	0.11
1.1 Emplacement Hole Inspection;										
1.1.1 Move hole cover removal machine to hole	10			VE1OP	10.0	4.0 (BG)	0.001	0.01		
1.1.2 Remove hole cover	10				10.0	4.0	0.001	0.01		
1.1.3 Visually inspect hole	10				10.0	4.0	0.001	0.01		
1.1.4 Measure depth	5				5.0	4.0	0.001	0.005		
1.1.5 Compare records	15				15.0	4.0	0.001	0.015	0.05	
1.1.6 Certify inspection	10			VE1QC	10.0	4.0	0.001	0.01	0.01	
	60	60								
1.2 Shield Door Installation;										
1.2.1 Position console	20			VE1OP	20.0	4.0 (BG)	0.001	0.02		
1.2.2 Move door to emplacement hole	20				20.0	4.0	0.001	0.02		
1.2.3 Position for attachment	10				10.0	4.0	0.001	0.01		
1.2.4 Attach to anchor points	20				20.0	4.0	0.001	0.02		
1.2.5 Connect utilities to console	10				10.0	4.0	0.001	0.01	0.08	
1.2.6 Certify installation	10			VE1QC	10.0	4.0	0.001	0.01	0.01	
	90	150								
1.3 Alignment System Installation;										
1.3.1 Move to emplacement hole	10			VE1OP	10.0	4.0 (BG)	0.001	0.01		
1.3.2 Position for attachment	10				10.0	4.0	0.001	0.01		
1.3.3 Attach to anchor points	20				20.0	4.0	0.001	0.02		
1.3.4 Connect utilities to shield door	10				10.0	4.0	0.001	0.01	0.05	
1.3.5 Certify installation	10			VE1QC	10.0	4.0	0.001	0.01	0.01	
	60	210								
2.0 WASTE EMPLACEMENT:			VE2							
2.1 Transporter Positioning;										
2.1.1 Move transporter to emplacement hole from access point	20			VE2OP	20.0	4.0 (TR)	0.005	0.1		
2.1.2 Position over hole	10				10.0	4.0	0.005	0.05		
2.1.3 Raise and level transporter	10				10.0	4.0	0.005	0.05		
2.1.4 Rotate cask to vertical	10				10.0	4.0	0.005	0.05		
2.1.5 Lower transporter to engage shield door	10				10.0	4.0	0.005	0.05		
2.1.6 Connect transporter utilities to shield door	5				5.0	1.3	1.28	6.40	6.7	
	65	65								
2.2 Waste Emplacement;										
2.2.1 Open shield door and cask door	5			VE2OP	5.0	4.0 (BG)	0.001	0.005		
2.2.2 Lower waste	10				10.0	4.0	0.001	0.01		
2.2.3 Release grapple and raise hoist	10				10.0	4.0	0.001	0.01		
2.2.4 Close shield door and cask door	5				5.0	4.0	0.001	0.005		

TABLE 4-8

VERTICAL EMPLACEMENT OF WASTE
(continued)

Operation Description	Operations Time (min) Ind.	Operations Time (min) Cum.	Crew Number	Crew Member	Exposure Time (min)	Exposure Area Number	Exposure Area Dose Rate (mrem/min)	Exposure Crew Member Dose (mrem) Ind.	Exposure Crew Member Dose (mrem) Total	Exposure Crew Member Dose (mrem) Cum.
2.2.5 Disconnect transporter utilities from shield door	5				5.0	4.0 (BG)	0.001	0.005		
2.2.6 Raise transporter	10				10.0	4.0	0.001	0.01		
2.2.7 Rotate cask to horizontal	10				10.0	4.0	0.001	0.01		
2.2.8 Move transporter to access point	20				20.0	4.0	0.001	0.002	0.075	
	75	140								
2.3 Plug Transport Positioning;										
2.3.1 Move plug emplacement transport to hole	10			VE20P	10.0	4.0 (BG)	0.001	0.01		
2.3.2 Position over hole	10				10.0	4.0	0.001	0.01		
2.3.3 Raise and level transporter	10				10.0	4.0	0.001	0.01		
2.3.4 Rotate cask to vertical	10				10.0	4.0	0.001	0.01		
2.3.5 Lower transport to engage shield door and connect utilities	10				10.0	4.0	0.001	0.01	0.05	
	50	190								
2.4 Plug Emplacement;										
2.4.1 Open shield door	5			VE20P	5.0	4.0 (BG)	0.001	0.005		
2.4.2 Lower cement plug	10				10.0	4.0	0.001	0.01		
2.4.3 Release grapple and raise hoist	10				10.0	4.0	0.001	0.01		
2.4.4 Close shield door	5				5.0	4.0	0.001	0.005		
2.4.5 Disconnect transport utilities from shield door	5				5.0	4.0	0.001	0.005		
2.4.6 Raise transport	10				10.0	4.0	0.001	0.01		
2.4.7 Rotate cask to horizontal	10				10.0	4.0	0.001	0.01		
2.4.8 Move transport	10				10.0	4.0	0.001	0.01	0.065	6.89
	65	255								
3.0 EMPLACEMENT HOLE CLOSURE:			VE1							
3.1 Alignment System Removal;										
3.1.1 Move transport to hole	10			VE10P	10.0	4.0 (BG)	0.001	0.01		
3.1.2 Disconnect utilities	10				10.0	4.0	0.001	0.01		
3.1.3 Unattach anchor points	20				20.0	4.0	0.001	0.02		
3.1.4 Move from hole	10				10.0	4.0	0.001	0.01	0.05	
	50	50								
3.2 Shield Door Removal;										
3.2.1 Disconnect utilities	10			VE10P	10.0	4.0 (BG)	0.001	0.01		
3.2.2 Remove console	10				10.0	4.0	0.001	0.01		
3.2.3 Bring transport to hole	10				10.0	4.0	0.001	0.01		
3.2.4 Unattach anchor points	30				30.0	4.0	0.001	0.03		
3.2.5 Remove shield door	30				30.0	4.0	0.001	0.03		
3.2.6 Fill door recess to floor level	20				20.0	4.0	0.001	0.02	0.11	0.34
	110	160								

TABLE 4-8

VERTICAL EMPLACEMENT OF WASTE
(concluded)

Operation Description	Operations Time (min)		Crew		Exposure					
					Time (min)	Area Number	Area Dose Rate (mrem/min)	Crew Member Dose (mrem)		
	Ind.	Cum.	Number	Member				Ind.	Total	Cum.
3.3 Certify Closure;										
3.3.1 Monitor hole	20			VE1RM	20.0	4.0 (BG)	0.001	0.02	0.02	0.02
3.3.2 Certify closure	20			VE1QC	20.0	4.0	0.001	0.02	0.02	0.05
	40	200								

BG - Background operation
TR - Transport operation
P - Parallel operation

TABLE 4-9

HORIZONTAL EMPLACEMENT OF WASTE

Note: All operation times are estimates.

Operation Description	Operations Time (min) Ind.	Operations Time (min) Cum.	Crew Number	Crew Member	Exposure Time (min)	Exposure Area Number	Exposure Area Dose Rate (mrem/min)	Exposure Crew Member Dose (mrem) Ind.	Exposure Crew Member Dose (mrem) Total	Exposure Crew Member Dose (mrem) Cum.
1.0 PREPARATION FOR WASTE EMPLACEMENT:			HE1	HE1EO	55.0	4.0 (BG)	0.001	0.055	0.055	0.055
1.1 Emplacement Hole Inspection;										
1.1.1 Move hole cover transport to emplacement hole	10			HE1OP	10.0	4.0 (BG)	0.001	0.01		
1.1.2 Remove hole cover	5				5.0	4.0	0.001	0.005	0.015	
1.1.3 Make visual inspection	20			HE1QC	20.0	4.0	0.001	0.02		
1.1.4 Take optical measurements	20				20.0	4.0	0.001	0.02		
1.1.5 Record comparison	10				10.0	4.0	0.001	0.01		
1.1.6 Certify inspection	5				5.0	4.0	0.001	0.005	0.055	
	70	70								
1.2 Console Installation;										
1.2.1 Move console transport to emplacement hole	10			HE1OP	10.0	4.0 (BG)	0.001	0.01		
1.2.2 Position for attachment of utility lines	10				10.0	4.0	0.001	0.01	0.02	
1.2.3 Certify installation	10			HE1QC	10.0	4.0	0.001	0.01	0.01	
	30	100								
1.3 Shield Door Installation;										
1.3.1 Move shield door transport to emplacement hole	10			HE1OP	10.0	4.0 (BG)	0.001	0.01		
1.3.2 Position for attachment	10				10.0	4.0	0.001	0.01		
1.3.3 Attach to anchor points	20				20.0	4.0	0.001	0.02		
1.3.4 Connect utilities to console	10				10.0	4.0	0.001	0.01	0.05	
1.3.5 Certify installation	10			HE1QC	10.0	4.0	0.001	0.01	0.01	
	60	160								
1.4 Alignment System Installation;										
1.4.1 Move alignment system transport to emplacement hole	10			HE1OP	10.0	4.0 (BG)	0.001	0.01		
1.4.2 Position for attachment	10				10.0	4.0	0.001	0.01		
1.4.3 Attach to anchor points	20				20.0	4.0	0.001	0.02		
1.4.4 Connect utilities to shield door	10				10.0	4.0	0.001	0.01	0.05	
1.4.5 Certify installation	10			HE1QC	10.0	4.0	0.001	0.01	0.01	
	60	220								
1.5 Power Roller System Installation;										
1.5.1 Move power roller transport to emplacement hole	10			HE1OP	10.0	4.0 (BG)	0.001	0.01		
1.5.2 Back transport onto alignment system	5				5.0	4.0	0.001	0.005		
1.5.3 Open shield door and transport door	5				5.0	4.0	0.001	0.005		
1.5.4 Connect and move each unit into emplacement hole	120				120.0	4.0	0.001	0.12		

TABLE 4-9

HORIZONTAL EMPLACEMENT OF WASTE
(continued)

Operation Description	Operations Time (min) Ind.	Operations Time (min) Cum.	Crew Number	Crew Member	Exposure Time (min)	Exposure Area Number	Exposure Area Dose Rate (mrem/min)	Exposure Crew Member Dose (mrem) Ind.	Exposure Crew Member Dose (mrem) Total	Exposure Crew Member Dose (mrem) Cum.
1.5.5 Position in emplacement hole	10				10.0	4.0	0.001	0.01		
1.5.6 Attach to anchor points	10				10.0	4.0	0.001	0.01		
1.5.7 Connect utilities to shield door	10				10.0	4.0	0.001	0.01	0.18	
1.5.8 Certify installation	10			HE1QC	10.0	4.0	0.001	0.01	0.01	
	190	410								
1.6 Emplacement System Certification (Cold Test);										
1.6.1 Move transporter to emplacement hole	10			HE1OP	10.0	4.0 (BG)	0.001	0.01		
1.6.2 Back transporter on alignment system	5				5.0	4.0	0.001	0.005		
1.6.3 Connect transporter utilities to shield door	10				10.0	4.0	0.001	0.01		
1.6.4 Console operations,										
1.6.4.1 Align transporter cask with shield door	10				10.0	4.0	0.001	0.01		
1.6.4.2 Open shield door and cask door	5				5.0	4.0	0.001	0.005		
1.6.4.3 Move dummy waste package onto power rollers	10				10.0	4.0	0.001	0.01		
1.6.4.4 Close shield door and cask door	5				5.0	4.0	0.001	0.005		
1.6.4.5 Power waste package to back of emplacement hole	60				60.0	4.0	0.001	0.06		
1.6.4.6 Return waste package to front of emplacement hole	60				60.0	4.0	0.001	0.06		
1.6.4.7 Open shield door and cask door	5				5.0	4.0	0.001	0.005		
1.6.4.8 Move waste package into transporter	10				10.0	4.0	0.001	0.01		
1.6.4.9 Close shield door and cask door	5				5.0	4.0	0.001	0.005		
1.6.4.10 Unalign transporter from shield door	10				10.0	4.0	0.001	0.01		
1.6.5 Disconnect transporter utilities from shield door	5				5.0	4.0	0.001	0.005		
1.6.6 Move transporter off alignment system	10				10.0	4.0	0.001	0.01	0.22	
1.6.7 Certify operation	10			HE1QC	10.0	4.0	0.001	0.01	0.01	
	230	640								
2.0 WASTE EMPLACEMENT:										
2.1 Transporter Arrival;			HE2							
2.1.1 Move transporter to emplacement hole	20			HE2OP	20.0	4.0 (TR)	0.005	0.1		
2.1.2 Back transporter onto alignment system	5				5.0	4.0	0.005	0.025		
2.1.3 Connect transporter utilities to shield door	5				4.0	4.0	0.005	0.02		
	30	30			1.0	1.5	2.46	2.46	2.61	

TABLE 4-9

HORIZONTAL EMPLACEMENT OF WASTE
(continued)

Operation Description	Operations Time (min) Ind.	Operations Time (min) Cum.	Crew Number	Crew Member	Exposure Time (min)	Exposure Area Number	Exposure Area Dose Rate (mrem/min)	Exposure Crew Member Dose (mrem) Ind.	Exposure Crew Member Dose (mrem) Total	Exposure Crew Member Dose (mrem) Cum.
2.2 Console Operation;										
2.2.1 Align transporter cask with shield door	10			HE2OP	10.0	4.0 (BG)	0.001	0.01		
2.2.2 Unlock cask door	5				5.0	4.0	0.001	0.005		
2.2.3 Open shield door and cask door	5				5.0	4.0	0.001	0.005		
2.2.4 Move waste package onto power rollers	10				10.0	4.0	0.001	0.01		
2.2.5 Close shield door and cask door	5				5.0	4.0	0.001	0.005		
2.2.6 Power waste package to final position	P									
2.2.7 Lock cask door	5				5.0	4.0	0.001	0.005		
2.2.8 Unalign transporter	10				10.0	4.0	0.001	0.01	0.05	
	50	80								
2.3 Transporter Return;				HE2OP						
2.3.1 Disconnect transporter utilities	5				4.0	4.0 (BG)	0.001	0.004		
					1.0	1.5	2.46	2.46		
2.3.2 Move transporter off alignment	5				5.0	4.0 (BG)	0.001	0.005		
2.3.3 Return to access point for next waste package, repeat 2.1 through 2.3	20				20.0	4.0	0.001	0.02	2.49	5.15
	30	110								
3.0 EMPLACEMENT HOLE CLOSURE:										
3.1 Concrete Plug Emplacement;			HE1							
3.1.1 Transport with Concrete Plug,										
3.1.1.1 Move plug transport to emplacement hole	10			HE1OP	10.0	4.0 (BG)	0.001	0.01		
3.1.1.2 Back transport onto alignment system	5				5.0	4.0	0.001	0.005		
3.1.1.3 Connect transport utilities to shield door	10				10.0	4.0	0.001	0.01		
3.1.2 Console Operation,										
3.1.2.1 Align transport with shield door	10				10.0	4.0 (BG)	0.001	0.01		
3.1.2.2 Open shield door and cask door	5				5.0	4.0	0.001	0.005		
3.1.2.3 Move plug onto power rollers	10				10.0	4.0	0.001	0.01		
3.1.2.4 Close shield door and cask door	5				5.0	4.0	0.001	0.005		
3.1.2.6 Power plug to final position	P									

TABLE 4-9

HORIZONTAL EMPLACEMENT OF WASTE
(continued)

Operation Description	Operations Time (min) Ind.	Operations Time (min) Cum.	Crew Number	Crew Member	Exposure Time (min)	Exposure Area Number	Exposure Area Dose Rate (mrem/min)	Exposure Crew Member Dose (mrem) Ind.	Exposure Crew Member Dose (mrem) Total	Exposure Crew Member Dose (mrem) Cum.
3.1.3 Plug Transport Removal,										
3.1.3.1 Disconnect transport utilities	10				10.0	4.0 (BG)	0.001	0.01		
3.1.3.2 Move transporter off alignment system	5				5.0	4.0	0.001	0.005	0.07	
	70	70								
3.2 Power Roller Removal;										
3.2.1 Removal Transport,										
3.2.1.1 Move power roller transport to emplacement hole	10			HF10P	10.0	4.0 (BG)	0.001	0.01		
3.2.1.2 Back transport onto alignment system	5				5.0	4.0	0.001	0.005		
3.2.1.3 Connect transport utilities to shield door	10				10.0	4.0	0.001	0.01		
3.2.2 Console Operation,										
3.2.2.1 Align transport with shield door	10				10.0	4.0 (BG)	0.001	0.01		
3.2.2.2 Open shield door and transport door	5				5.0	4.0	0.001	0.005		
3.2.2.3 Unattach anchor points	10				10.0	4.0	0.001	0.01		
3.2.2.4 Disconnect utilities from shield door	10				10.0	4.0	0.001	0.01		
3.2.2.5 Remove and disconnect each unit into transport	200				200.0	4.0	0.001	0.2		
3.2.2.6 Monitor each unit in removal transport	P									
3.2.2.7 Remove each monitored unit	P									
3.2.3 Removal Transport,										
3.2.3.1 Close shield door and transport door	5				5.0	4.0 (BG)	0.001	0.005		
3.2.3.2 Unalign transport from shield door	10				10.0	4.0	0.001	0.01		
3.2.3.3 Disconnect utilities from shield door	10				10.0	4.0	0.001	0.01		
3.2.3.4 Move transport off alignment system	5				5.0	4.0	0.001	0.005	0.265	
	290	360								

TABLE 4-9

HORIZONTAL EMPLACEMENT OF WASTE
(continued)

Operation Description	Operations Time (min) Ind.	Operations Time (min) Cum.	Crew Number	Crew Member	Exposure Time (min)	Exposure Area Number	Exposure Area Dose Rate (mrem/min)	Exposure Crew Member Dose (mrem) Ind.	Exposure Crew Member Dose (mrem) Total	Exposure Crew Member Dose (mrem) Cum.
3.3 Final Closure Plug;										
3.3.1 Move plug transport to emplacement hole	10			HE10P	10.0	4.0 (BG)	0.001	0.01		
3.3.2 Back plug transport onto alignment system	5				5.0	4.0	0.001	0.005		
3.3.3 Connect plug transport utilities to shield door	10				10.0	4.0	0.001	0.01		
3.3.4 Console Operation,										
3.3.4.1 Align plug transport with shield door	10				10.0	4.0	0.001	0.01		
3.3.4.2 Open plug transport door and shield door	5				5.0	4.0	0.001	0.005		
3.3.4.3 Insert plug into emplacement hole	10				10.0	4.0	0.001	0.01		
3.3.4.4 Close plug transport door and shield door	5				5.0	4.0	0.001	0.005		
3.3.4.5 Unalign plug transport	10				10.0	4.0	0.001	0.01		
3.3.5 Disconnect plug transport utilities	10				10.0	4.0	0.001	0.01		
3.3.6 Move plug transport off alignment system	5				5.0	4.0	0.001	0.005	0.08	
	80	440								
3.4 Alignment System Removal;										
3.4.1 Move removal transport to emplacement hole	10			HE10P	10.0	4.0 (BG)	0.001	0.01		
3.4.2 Disconnect utilities from shield door	10				10.0	4.0	0.001	0.01		
3.4.3 Unattach anchor points	20				20.0	4.0	0.001	0.02	0.04	
3.4.4 Remove from hole	P									
	40	480								
3.5 Shield Door Removal;										
3.5.1 Move shield door transport to emplacement hole	10			HE10P	10.0	4.0 (BG)	0.001	0.01		
3.5.2 Disconnect shield door utilities from console	10				10.0	4.0	0.001	0.01		
3.5.3 Unattach anchor points	40				40.0	4.0	0.001	0.04	0.06	
3.5.4 Remove from hole	P									
	60	540								

TABLE 4-9

HORIZONTAL EMPLACEMENT OF WASTE
(concluded)

Operation Description	Operations Time (min) Ind.	Operations Time (min) Cum.	Crew Number	Crew Member	Exposure Time (min)	Exposure Area Number	Exposure Area Dose Rate (mrem/min)	Exposure Crew Member Dose (mrem) Ind.	Exposure Crew Member Dose (mrem) Total	Exposure Crew Member Dose (mrem) Cum.
3.6 Console Removal;										
3.6.1 Move console transport to emplacement hole	10			HE1OP	10.0	4.0 (BG)	0.001	0.01		
3.6.2 Remove console from hole	10				10.0	4.0	0.001	0.01	0.02	
	20	560								
3.7 Certify Closure;										
3.7.1 Move hole cover transport to emplacement hole	10			HE1OP	10.0	4.0 (BG)	0.001	0.01		
3.7.2 Position emplacement hole cover	10				10.0	4.0	0.001	0.01		
3.7.3 Install hole cover	10				10.0	4.0	0.001	0.01		
3.7.4 Attach anchor points	10				10.0	4.0	0.001	0.01	0.04	1.13
3.7.5 Monitor hole	20			HE1RM	20.0	4.0	0.001	0.02	0.02	0.02
3.7.6 Certify closure	20			HE1QC	20.0	4.0	0.001	0.02	0.02	0.12
	80	640								

4.5 Waste Retrieval

It is assumed that all initial conditions for waste retrieval have been met before operations begin. These conditions include: all mining, backfill removal, and stabilization have been completed; retrieval drifts are ventilated; utilities are available; and preparations for equipment installation have been completed. Removal of the waste packages has been detailed for ramp access only.

4.5.1 Vertical Retrieval

Operations for vertical retrieval are presented in Table 4-10.

4.5.2 Horizontal Retrieval

Table 4-11 lists the operations for horizontal retrieval.

BG - Background operation
TR - Transporter operation
P - Parallel operation
RT - Remote operation

TABLE 4-10

VERTICAL RETRIEVAL OF WASTE

Note: All operation times are estimates.

Operation Description	Operations Time (min) Ind.	Operations Time (min) Cum.	Crew Number	Crew Member	Exposure Time (min)	Exposure Area Number	Exposure Area Dose Rate (mrem/min)	Exposure Crew Member Dose (mrem) Ind.	Exposure Crew Member Dose (mrem) Total	Exposure Crew Member Dose (mrem) Cum.
1.0 PREPARATION FOR WASTE RETRIEVAL:			VR1	VR1RO	110.0	4.0 (BG)	0.001	0.11	0.11	0.11
1.1 Backfill Removal;										
1.1.1 Certify hole and number records	10			VR1QC	10.0	4.0 (BG)	0.001	0.01		
1.1.2 Monitor hole	20			VR1RM	20.0	4.0	0.001	0.02	0.02	
1.1.3 Remove fill material	20			VR1OP	20.0	4.0	0.001	0.02	0.02	
1.1.4 Ascertain plug condition	10			VR1QC	10.0	4.0	0.001	0.01	0.02	
	60	60								
1.2 Console Installation;										
1.2.1 Move console to retrieval hole	10			VR1OP	10.0	4.0 (BG)	0.001	0.01		
1.2.2 Position console	10				10.0	4.0	0.001	0.01	0.02	
1.2.3 Certify installation	10			VR1QC	10.0	4.0	0.001	0.01	0.01	
	30	90								
1.3 Shield Door Installation;										
1.3.1 Move door to retrieval hole	20			VR1OP	20.0	4.0 (BG)	0.001	0.02		
1.3.2 Position for attachment	10				10.0	4.0	0.001	0.01		
1.3.3 Attach to anchor points	20				20.0	4.0	0.001	0.02		
1.3.4 Connect utilities to console	10				10.0	4.0	0.001	0.01	0.06	
1.3.5 Certify installation	10			VR1QC	10.0	4.0	0.001	0.01	0.01	
	70	160								
1.4 Alignment System Installation;										
1.4.1 Move to retrieval hole	10			VR1OP	10.0	4.0 (BG)	0.001	0.01		
1.4.2 Position for attachment	10				10.0	4.0	0.001	0.01		
1.4.3 Attach to anchor points	20				20.0	4.0	0.001	0.02		
1.4.4 Connect utilities to shield door	10				10.0	4.0	0.001	0.01	0.05	
1.4.5 Certify installation	10			VR1QC	10.0	4.0	0.001	0.01	0.01	
	60	220								
2.0 WASTE RETRIEVAL:			VR2							
2.1 Plug Transport Positioning;										
2.1.1 Move plug removal transport to hole	10			VR2OP	10.0	4.0 (BG)	0.001	0.01		
2.1.2 Position over hole	10				10.0	4.0	0.001	0.01		
2.1.3 Raise and level transporter	10				10.0	4.0	0.001	0.01		
2.1.4 Rotate cask to vertical	10				10.0	4.0	0.001	0.01		
2.1.5 Lower transport to engage shield door and connect utilities	10				10.0	4.0	0.001	0.01	0.05	
	50	50								

TABLE 4-10

VERTICAL RETRIEVAL OF WASTE
(continued)

Operation Description	Operations Time (min) Ind.	Operations Time (min) Cum.	Crew Number	Crew Member	Exposure Time (min)	Exposure Area Number	Exposure Area Dose Rate (mrem/min)	Exposure Crew Member Dose (mrem) Ind.	Exposure Crew Member Dose (mrem) Total	Exposure Crew Member Dose (mrem) Cum.
2.2 Plug Removal:										
2.2.1 Open shield door	5			VR20P	5.0	4.0 (BG)	0.001	0.005		
2.2.2 Lower grapple and attach to plug	10				10.0	4.0	0.001	0.01		
2.2.3 Raise plug into cask	10				10.0	4.0	0.001	0.01		
2.2.4 Close shield door	5				5.0	4.0	0.001	0.005		
2.2.5 Disconnect transport utilities from shield door	5				5.0	4.0	0.001	0.005		
2.2.6 Raise transport	10				10.0	4.0	0.001	0.01		
2.2.7 Rotate cask to horizontal	10				10.0	4.0	0.001	0.01		
2.2.8 Move transport	10				10.0	4.0	0.001	0.01	0.065	
	65	115								
2.3 Transporter Positioning:										
2.3.1 Move transporter to retrieval hole from access point	20			VR20P	20.0	4.0 (BG)	0.001	0.02		
2.3.2 Position over hole	10				10.0	4.0	0.001	0.01		
2.3.3 Raise and level transporter	10				10.0	4.0	0.001	0.01		
2.3.4 Rotate cask to vertical	10				10.0	4.0	0.001	0.01		
2.3.5 Lower transport to engage shield door	10				10.0	4.0	0.001	0.01		
2.3.6 Connect transporter utilities to shield door	5				5.0	4.0	0.001	0.005	0.065	
	65	180								
2.4 Waste Retrieval:										
2.4.1 Open shield door and cask door	5			VR20P	5.0	4.0 (BG)	0.001	0.005		
2.4.2 Lower grapple and attach waste package	10				10.0	4.0	0.001	0.01		
2.4.3 Raise waste package	10				10.0	4.0	0.001	0.01		
2.4.4 Close shield door and cask door	5				5.0	4.0	0.001	0.005		
2.4.5 Disconnect transporter utilities from shield door	5				5.0	1.3 (TR)	1.28	6.4		
2.4.6 Raise transporter	10				10.0	4.0	0.005	0.05		
2.4.7 Rotate cask to horizontal	10				10.0	4.0	0.005	0.05		
2.4.8 Move transporter to access point	20				20.0	4.0	0.005	0.1	6.63	
	75	255								
2.5 Transport Removal:										
2.5.1 Raise transporter	10			VR20P	10.0	4.0 (TR)	0.005	0.05		
2.5.2 Rotate cask to horizontal	10				10.0	4.0	0.005	0.05		
2.5.3 Move transporter to access point	20				20.0	4.0	0.005	0.1	0.2	7.01
	40	295								

TABLE 4-10

VERTICAL RETRIEVAL OF WASTE
(continued)

Operation Description	Operations Time (min) Ind.	Operations Time (min) Cum.	Crew Number	Crew Member	Exposure Time (min)	Exposure Area Number	Exposure Area Dose Rate (mrem/min)	Exposure Crew Member Dose (mrem) Ind.	Exposure Crew Member Dose (mrem) Total	Exposure Crew Member Dose (mrem) Cum.
3.0 RETRIEVAL HOLE CLOSURE:			VR1							
3.1 Alignment System Removal;										
3.1.1 Move transport to hole	10			VR1OP	10.0	4.0 (BG)	0.001	0.01		
3.1.2 Disconnect utilities	10				10.0	4.0	0.001	0.01		
3.1.3 Unattach anchor points	20				20.0	4.0	0.001	0.02		
3.1.4 Move from hole	10				10.0	4.0	0.001	0.01	0.05	
	50	50								
3.2 Shield Door Removal;										
3.2.1 Disconnect utilities	10			VR1OP	10.0	4.0 (BG)	0.001	0.01		
3.2.2 Remove console	10				10.0	4.0	0.001	0.01		
3.2.3 Bring transport to hole	10				10.0	4.0	0.001	0.01		
3.2.4 Unattach anchor points	30				30.0	4.0	0.001	0.03		
3.2.5 Remove shield door	30				30.0	4.0	0.001	0.03	0.09	
	90	140								
3.3 Hole Cover Installation;										
3.3.1 Move hole cover to hole	10			VR1OP	10.0	4.0 (BG)	0.001	0.01		
3.3.2 Install hole cover	10				10.0	4.0	0.001	0.01		
3.3.3 Fill cover recess to floor level	20				20.0	4.0	0.001	0.02	0.04	0.33
	40	180								
3.4 Certify Removal;										
3.4.1 Monitor hole	10			VR1RM	10.0	4.0 (BG)	0.001	0.01	0.01	0.03
3.4.2 Certify closure	10			VR1QC	10.0	4.0	0.001	0.01	0.01	0.06
	20	200								
4.0 RAMP ACCESS:										
4.1 Transporter Ramp Access;			RA2							
4.1.1 Move transporter with facility cask from retrieval access point up ramp	20			RA2D	20.0	4.0 (TR)	0.005	0.1		
4.1.2 Proceed to surge storage	10				10.0	4.0	0.005	0.05	0.15	0.15
4.1.3 Accept transporter	10			RA2RM	10.0	4.0	0.005	0.05	0.05	0.05
4.1.4 Align facility cask and attach to surge storage port	10			RA2OP	10.0	4.0	0.005	0.05	0.05	0.05
	50	50								
4.2 Waste Package Unloading;			RA1	RA1SO	105.0	4.0 (RT)	0.01	1.05	1.05	1.05
4.2.1 Remove surge storage port cover	10			RA1OP	5.0	4.0 (RT)	0.01	0.05		
4.2.2 Remove facility cask lid	10				5.0	4.0	0.01	0.05		
4.2.3 Unload waste package	20				10.0	4.0	0.01	0.1		
4.2.4 Replace facility cask lid	10				5.0	4.0	0.01	0.05		
4.2.5 Replace port cover	10				5.0	4.0	0.01	0.05	0.30	0.30
	60	110								

TABLE 4-10

VERTICAL RETRIEVAL OF WASTE
(continued)

Operation Description	Operations Time (min) Ind.	Operations Time (min) Cum.	Crew Number	Crew Member	Exposure Time (min)	Exposure Area Number	Exposure Area Dose Rate (mrem/min)	Exposure Crew Member Dose (mrem) Ind.	Exposure Crew Member Dose (mrem) Total	Exposure Crew Member Dose (mrem) Cum.
5.0 WASTE PACKAGE TO SURFCE SURGE STORAGE:										
5.1 Moving Acceptable Waste Package;			HP2							
5.1.1 Move acceptable waste package to inspection station	10			HP2OP	10.0	4.0 (RT)	0.01	0.1		
5.1.2 Certify acceptablility	20			HP2QC	10.0	4.0	0.01	0.1	0.1	0.1
				HP2RM	10.0	4.0	0.01	0.1	0.1	0.1
5.1.3 Move waste package to storage	10			HP2OP	10.0	4.0	0.01	0.1	0.2	0.2
	40	40								
6.0 CASK LOADING:										
6.1 Waste Package Loading;			HP1	HP1HO	110.0	4.0 (RT)	0.01	1.1	1.1	1.1
6.1.1 Open hot cell port	10			HP1OP	10.0	4.0 (RT)	0.01	0.1		
6.1.2 Remove inner cask lid	10				10.0	4.0	0.01	0.1		
6.1.3 Inspect lid, seal, and inner cask	10				10.0	4.0	0.01	0.1		
6.1.4 Insert first waste package	10				10.0	4.0	0.01	0.1		
6.1.5 Repeat until cask is full	20				20.0	4.0	0.01	0.2		
6.1.6 Log loading information	10				10.0	4.0	0.01	0.1	0.7	
	70	70								
6.2 Cask Closure;										
6.2.1 Replace inner lid	10			HP1OP	10.0	4.0 (RT)	0.01	0.1		
6.2.2 Close loading port	10				10.0	4.0	0.01	0.1	0.2	0.9
	20	90								
7.0 CASK PREPARATION FOR SHIPPING:										
7.1 Removal of Cask from Hot Cell;			S3							
7.1.1 Remove cask from port	10			S3OP	2.0	3.3	0.32	0.64		
7.1.2 Move cask to prep area	20				4.0	4.0	0.01	0.04	0.68	
	30	30								
7.2 Cask Preparation for Carrier Loading;										
7.2.1 Remove cask-to-hot cell adaptor	15			S3OP	10.0	1.3	0.05	0.5		
7.2.2 Tighten inner lid bolts	40				35.0	1.1	0.27	9.45		
7.2.3 Replace outer lid	5				2.0	2.2	0.10	0.20		
7.2.4 Tighten outer lid bolts	40				35.0	1.3	0.05	1.75	11.90	12.58
	100	130								

TABLE 4-10

VERTICAL RETRIEVAL OF WASTE
(continued)

Operation Description	Operations Time (min) Ind.	Operations Time (min) Cum.	Crew Number	Crew Member	Exposure Time (min)	Exposure Area Number	Exposure Area Dose Rate (mrem/min)	Exposure Crew Member Dose (mrem) Ind.	Exposure Crew Member Dose (mrem) Total	Exposure Crew Member Dose (mrem) Cum.
8.0 CARRIER LOADING:			S2	S2RO	110.0	4.0 (BG)	0.001	0.11	0.11	0.11
8.1 Inspect for Radiation Levels:										
8.1.1 Measure penetrating radiation	30			S2RM	1.0	2.1	0.008	0.008		
8.1.2 Measure alpha contamination	P				1.0	2.3	0.55	0.55		
8.1.3 Temporarily fix alpha	P				1.0	2.4	0.42	0.42		
					1.0	1.2	0.007	0.007		
					1.0	1.4	1.28	1.28		
					1.0	1.5	0.77	0.77		
					0.5	1.2	0.007	0.004		
					0.5	1.4	1.28	0.64		
					0.5	1.5	0.77	0.385	4.06	4.06
	30	30								
8.2 Load Cask on Carrier;										
8.2.1 Move cask to trans lock	10			S2OP	2.0	2.3	0.55	1.1		
8.2.2 Attach yoke to cask	5				3.0	1.2	0.007	0.021		
8.2.3 Transfer cask to carrier	10				5.0	4.0 (BG)	0.001	0.005		
8.2.4 Lower cask to horizontal	10				5.0	4.0	0.001	0.005		
8.2.5 Remove yoke	5				2.0	1.2	0.007	0.014		
8.2.6 Attach tiedowns	20				4.0	1.3	0.05	0.2		
					4.0	1.4	1.28	5.12		
8.2.7 Close personnel barrier	20				0.5	2.1	0.008	0.004		
					0.5	2.4	0.42	0.21	6.68	
	80	110								
8.3 Transfer of Carrier;										
8.3.1 Move to inspection area	10			S2OP	1.0	2.1	0.008	0.008	0.008	6.69
8.3.2 Inspect carrier, barrier, and cask	20			S2QC	1.0	3.1	0.005	0.005		
					1.0	3.3	0.32	0.32		
					1.0	3.4	0.29	0.29		
					1.0	2.1	0.008	0.008		
					1.0	2.3	0.55	0.55		
					1.0	2.4	0.42	0.42		
					1.0	1.2	0.007	0.007		
					1.0	1.4	1.28	1.28		
					1.0	1.5	0.77	0.77		
8.3.3 Attach seals	10				2.0	2.1	0.008	0.016		
					2.0	2.3	0.55	1.1		
					2.0	2.4	0.42	0.84	5.61	5.61
8.3.4 Certify release	P									
8.3.5 Move to outgoing parking	10			S2D	10.0	4.0 (BG)	0.001	0.01	0.01	0.01
	50	160								

TABLE 4-10

VERTICAL RETRIEVAL OF WASTE
(concluded)

Operation Description	Operations Time (min) Ind.	Operations Time (min) Cum.	Crew Number	Crew Member	Exposure Time (min)	Exposure Area Number	Exposure Area Dose Rate (mrem/min)	Exposure Crew Member Dose (mrem) Ind.	Exposure Crew Member Dose (mrem) Total	Exposure Crew Member Dose (mrem) Cum.
9.0 SHIPPING CARRIER:			S1							
9.1 Carrier Inspection;										
9.1.1 Move carrier to gate	10			S1OP	10.0	4.0 (BG)	0.001	0.01	0.01	0.01
9.1.2 Measure penetrating radiation	10			S1RM	10.0	4.0 (BG)	0.001	0.01	0.01	0.01
9.1.3 Compare with DOT limits	P									
9.1.4 Inspect carrier	5			S1QC	0.5	3.1	0.005	0.025		
					0.5	3.3	0.32	0.16		
					0.5	3.4	0.29	0.145		
9.1.5 Inspect security seals	5				0.5	2.1	0.008	0.004		
					0.5	2.2	0.55	0.275		
					0.5	2.3	0.42	0.21	0.80	0.80
	30	30								
9.2 Release Carrier;										
9.2.1 Confirm shipping papers	10			S1G	5.0	4.0 (BG)	0.001	0.005	0.005	0.005
9.2.2 Release carrier with cask	P									
	10	40								

BG - Background operation
TR - Transporter operation
P - Parallel operation
RT - Remote operation

TABLE 4-11

HORIZONTAL RETRIEVAL OF WASTE

Note: All operation times are estimates.

Operation Description	Operations Time (min) Ind.	Operations Time (min) Cum.	Crew Number	Crew Member	Exposure Time (min)	Exposure Area Number	Exposure Area Dose Rate (mrem/min)	Exposure Crew Member Dose (mrem) Ind.	Exposure Crew Member Dose (mrem) Total	Exposure Crew Member Dose (mrem) Cum.
1.0 PREPARATION FOR WASTE RETRIEVAL:			HR1	HR1RO	110.0	4.0 (BG)	0.001	0.11	0.11	0.11
1.1 Hole Cover Removal;										
1.1.1 Certify hole number and records	10			HR1QC	10.0	4.0 (BG)	0.001	0.01	0.01	
1.1.2 Monitor hole with cover	20			HR1RM	20.0	4.0	0.001	0.02		
1.1.3 Move hole cover removal transport to retrieval hole	10			HR1OP	10.0	4.0	0.001	0.01		
1.1.4 Position removal transport	10				10.0	4.0	0.001	0.01		
1.1.5 Unattach anchor points	20				20.0	4.0	0.001	0.02		
1.1.6 Remove hole cover	10				10.0	4.0	0.001	0.01	0.05	
1.1.7 Monitor hole without cover	10			HR1RM	10.0	4.0	0.001	0.01	0.03	
	90	90								
1.2 Console Installation;										
1.2.1 Move transport console to retrieval hole	10			HR1OP	10.0	4.0 (BG)	0.001	0.01		
1.2.2 Position for attachment of utility lines	10				10.0	4.0	0.001	0.01	0.02	
1.2.3 Certify installation	10			HR1QC	10.0	4.0	0.001	0.01	0.01	
	30	120								
1.3 Shield Door Installation;										
1.3.1 Move shield door transport to retrieval hole	10			HR1OP	10.0	4.0 (BG)	0.001	0.01		
1.3.2 Position for attachment	10				10.0	4.0	0.001	0.01		
1.3.3 Attach to anchor points	20				20.0	4.0	0.001	0.02		
1.3.4 Connect utilities to console	10				10.0	4.0	0.001	0.01	0.05	
1.3.5 Certify installation	10			HR1QC	10.0	4.0	0.001	0.01	0.01	
	60	180								
1.4 Alignment System Installation;										
1.4.1 Move alignment system transport to retrieval hole	10			HR1OP	10.0	4.0 (BG)	0.001	0.01		
1.4.2 Position for attachment	10				10.0	4.0	0.001	0.01		
1.4.3 Attach to anchor points	20				20.0	4.0	0.001	0.02		
1.4.4 Connect utilities to shield door	10				10.0	4.0	0.001	0.01	0.05	
1.4.5 Certify installation	10			HR1QC	10.0	4.0	0.001	0.01	0.01	
	60	240								
1.5 Final Closure Plug Removal;										
1.5.1 Move closure plug transport to retrieval hole	10			HR1OP	10.0	4.0 (BG)	0.001	0.01		
1.5.2 Back plug transport onto alignment system	5				5.0	4.0	0.001	0.005		
1.5.3 Connect plug transport utilities to shield door	10				10.0	4.0	0.001	0.01		

TABLE 4-11

HORIZONTAL RETRIEVAL OF WASTE
(continued)

Operation Description	Operations Time (min) Ind.	Operations Time (min) Cum.	Crew Number	Crew Member	Exposure Time (min)	Exposure Area Number	Exposure Area Dose Rate (mrem/min)	Exposure Crew Member Dose (mrem) Ind.	Exposure Crew Member Dose (mrem) Total	Exposure Crew Member Dose (mrem) Cum.
1.5.4 Console operation,										
1.5.4.1 Align plug transport with shield door	10				10.0	4.0	0.001	0.01		
1.5.4.2 Open plug transport door and shield door	5				5.0	4.0	0.001	0.005		
1.5.4.3 Remove plug from retrieval hole	10				10.0	4.0	0.001	0.01		
1.5.4.4 Close plug transport door and shield door	5				5.0	4.0	0.001	0.005		
1.5.4.5 Unalign plug transport	10				10.0	4.0	0.001	0.01		
1.5.5 Disconnect plug transport utilities	10				10.0	4.0	0.001	0.01		
1.6.6 Move plug transport off alignment system	5				5.0	4.0	0.001	0.005	0.08	
	80	320								
1.6 Power Roller System Installation:										
1.6.1 Installation Transport,										
1.6.1.1 Move power roller transport to retrieval hole	10			HR1OP	10.0	4.0 (BG)	0.001	0.01		
1.6.1.2 Back transport onto alignment system	5				5.0	4.0	0.001	0.005		
1.6.1.3 Connect transport utilities to shield door	10				10.0	4.0	0.001	0.01		
1.6.2 Console Operation,										
1.6.2.1 Align transport with shield door	10				10.0	4.0 (BG)	0.001	0.01		
1.6.2.2 Open shield door and transport door	5				5.0	4.0	0.001	0.005		
1.6.2.3 Connect and move each power roller unit into retrieval hole	120				120.0	4.0	0.001	0.12		
1.6.2.4 Position in retrieval hole	10				10.0	4.0	0.001	0.01		
1.6.2.5 Attach to anchor points	10				10.0	4.0	0.001	0.01		
1.6.2.6 Connect utilities to shield door	10				10.0	4.0	0.001	0.01		
1.6.2.7 Certify installation	10			HR1QC	10.0	4.0	0.001	0.01	0.01	
1.6.3 Installation Transport,										
1.6.3.1 Close shield doors and transport door	5			HR1OP	5.0	4.0 (BG)	0.001	0.005		
1.6.3.2 Unalign transport from shield door	10				10.0	4.0	0.001	0.01		
1.6.3.3 Disconnect utilities from shield door	10				10.0	4.0	0.001	0.01		
1.6.3.4 Move transport off alignment system	5				5.0	4.0	0.001	0.005	0.22	
	240	480								

TABLE 4-11

HORIZONTAL RETRIEVAL OF WASTE
(continued)

Operation Description	Operations Time (min) Ind.	Operations Time (min) Cum.	Crew Number	Crew Member	Exposure Time (min)	Exposure Area Number	Exposure Area Dose Rate (mrem/min)	Exposure Crew Member Dose (mrem) Ind.	Exposure Crew Member Dose (mrem) Total	Exposure Crew Member Dose (mrem) Cum.
2.0 WASTE RETRIEVAL;			HR2							
2.1 Transporter Arrival;										
2.1.1 Move empty transporter to retrieval hole	20			HR2OP	20.0	4.0 (BG)	0.001	0.02		
2.1.2 Back transporter onto alignment system	5				5.0	4.0	0.001	0.005		
2.1.3 Connect transporter utilities to shield door	5				4.0	4.0	0.001	0.005		
	30	30			1.0	1.5	2.46	2.46	2.49	
2.2 Console Operation;										
2.2.1 Align transporter cask with shield door	10			HR2OP	10.0	4.0 (BG)	0.001	0.01		
2.2.2 Unlock cask door	5				5.0	4.0	0.001	0.005		
2.2.3 Power waste package to shield door	P									
2.2.4 Open shield door and cask door	5				5.0	4.0	0.001	0.005		
2.2.5 Move waste package into cask	10				10.0	4.0	0.001	0.01		
2.2.6 Close shield door and cask door	5				5.0	4.0	0.001	0.005		
2.2.7 Lock cask door	5				5.0	4.0	0.001	0.005		
2.2.8 Unalign transporter	10				10.0	4.0	0.001	0.01	0.05	
	50	80								
2.3 Transporter Return;										
2.3.1 Disconnect transporter utilities	5			HR2OP	4.0	4.0 (TR)	0.005	0.02		
					1.0	1.5	2.46	2.46		
2.3.2 Move transporter off alignment system	5				5.0	4.0	0.005	0.025		
2.3.3 Deliver waste package to access point	20				20.0	4.0	0.005	0.1	2.61	5.15
	30	110								
2.4 Repeat 2.1 through 2.3 until retrieval retrieval hole has been emptied of the designated number of waste packages.										
3.0 RETRIEVAL HOLE CLOSURE:			HR1							
3.1 Concrete Plug Emplacement;										
3.1.1 Transport with Concrete Plug,										
3.1.1.1 Move plug transport to retrieval hole	10			HR1OP	10.0	4.0 (BG)	0.001	0.01		

TABLE 4-11

HORIZONTAL RETRIEVAL OF WASTE
(continued)

Operation Description	Operations Time (min) Ind.	Operations Time (min) Cum.	Crew Number	Crew Member	Exposure Time (min)	Exposure Area Number	Exposure Area Dose Rate (mrem/min)	Exposure Crew Member Dose (mrem) Ind.	Exposure Crew Member Dose (mrem) Total	Exposure Crew Member Dose (mrem) Cum.
3.1.1.2 Back transport onto alignment system	5				5.0	4.0	0.001	0.005		
3.1.1.2 Connect transport utilities to shield door	10				10.0	4.0	0.001	0.01		
3.1.2 Console Operation,										
3.1.2.1 Align transport with shield door	10				10.0	4.0 (BG)	0.001	0.01		
3.1.2.2 Open shield door and cask door	5				5.0	4.0	0.001	0.005		
3.1.2.3 Move plug onto power rollers	10				10.0	4.0	0.001	0.01		
3.1.2.4 Close shield door and cask door	5				5.0	4.0	0.001	0.005		
3.1.2.5 Power plug to final position	P									
3.1.3 Plug Transport Removal,										
3.1.3.1 Disconnect transport utilities	10				10.0	4.0 (BG)	0.001	0.01		
3.1.3.2 Move transporter off alignment system	5				5.0	4.0	0.001	0.005	0.07	
	70	70								
3.2 Power Roller Removal;										
3.2.1 Removal Transport,										
3.2.1.1 Move power roller transport to retrieval hole	10			HR10P	10.0	4.0 (BG)	0.001	0.01		
3.2.1.2 Back transport onto alignment system	5				5.0	4.0	0.001	0.005		
3.2.1.3 Connect transport utilities to shield door	10				10.0	4.0	0.001	0.01		
3.2.2 Console Operation,										
3.2.2.1 Align transport with shield door	10				10.0	4.0 (BG)	0.001	0.01		
3.2.2.2 Open shield door and transport door	5				5.0	4.0	0.001	0.005		
3.2.2.3 Unattach anchor points	10				10.0	4.0	0.001	0.01		
3.2.2.4 Disconnect utilities from shield door	10				10.0	4.0	0.001	0.01		
3.2.2.5 Remove and disconnect each unit into transport	200				200.0	4.0	0.001	0.2		
3.2.2.6 Monitor each unit in removal transport	P									
3.2.2.7 Remove each monitored unit	P									
3.2.3 Removal Transport,										
3.2.3.1 Close shield door and transport door	5				5.0	4.0 (BG)	0.001	0.005		

TABLE 4-11

HORIZONTAL RETRIEVAL OF WASTE
(continued)

Operation Description	Operations Time (min) Ind.	Operations Time (min) Cum.	Crew Number	Crew Member	Exposure Time (min)	Exposure Area Number	Exposure Area Dose Rate (mrem/min)	Exposure Crew Member Dose (mrem) Ind.	Exposure Crew Member Dose (mrem) Total	Exposure Crew Member Dose (mrem) Cum.
3.2.3.2 Unalign transport from shield door	10				10.0	4.0	0.001	0.01		
3.2.3.3 Disconnect utilities from shield door	10				10.0	4.0	0.001	0.01		
3.2.3.4 Move transport off alignment system	5				5.0	4.0	0.001	0.005	0.265	
	290	360								
3.3 Final Closure Plug;										
3.3.1 Move plug transport to retrieval hole	10			HR10P	10.0	4.0 (BG)	0.001	0.01		
3.3.2 Back plug transport onto alignment system	5				5.0	4.0	0.001	0.005		
3.3.3 Connect plug transport utilities to shield door	10				10.0	4.0	0.001	0.01		
3.3.4 Console Operation,										
3.3.4.1 Align plug transport with shield door	10				10.0	4.0	0.001	0.01		
3.3.4.2 Open plug transport door and shield door	5				5.0	4.0	0.001	0.005		
3.3.4.3 Insert plug into retrieval hole	10				10.0	4.0	0.001	0.01		
3.3.4.4 Close plug transport door and shield door	5				5.0	4.0	0.001	0.005		
3.3.4.5 Unalign plug transport	10				10.0	4.0	0.001	0.01		
3.3.5 Disconnect plug transport utilities	10				10.0	4.0	0.001	0.01		
3.3.6 Move plug transport off alignment system	5				5.0	4.0	0.001	0.005	0.08	
	80	440								
3.4 Alignment System Removal;										
3.4.1 Move removal transport to retrieval hole	10			HR10P	10.0	4.0 (BG)	0.001	0.01		
3.4.2 Disconnect utilities from shield door	10				10.0	4.0	0.001	0.01		
3.4.3 Unattach anchor points	20				20.0	4.0	0.001	0.02	0.04	
3.4.4 Remove from hole	P									
	40	480								
3.5 Shield Door Removal;										
3.5.1 Move shield door transport to retrieval hole	10			HR10P	10.0	4.0 (BG)	0.001	0.01		
3.5.2 Disconnect shield door utilities from console	10				10.0	4.0	0.001	0.01		
3.5.3 Unattach anchor points	40				40.0	4.0	0.001	0.04	0.06	
3.5.4 Remove from retrieval hole	P									
	60	540								

TABLE 4-11

HORIZONTAL RETRIEVAL OF WASTE
(continued)

Operation Description	Operations Time (min) Ind.	Operations Time (min) Cum.	Crew Number	Crew Member	Exposure Time (min)	Exposure Area Number	Exposure Area Dose Rate (mrem/min)	Exposure Crew Member Dose (mrem) Ind.	Exposure Crew Member Dose (mrem) Total	Exposure Crew Member Dose (mrem) Cum.
3.6 Console Removal;										
3.6.1 Move console transport to retrieval hole	10			HR1OP	10.0	4.0 (BG)	0.001	0.01		
3.6.2 Remove console from hole	10				10.0	4.0	0.001	0.01	0.02	
	20	560								
3.7 Certify Closure;										
3.7.1 Move hole cover transport to retrieval hole	10			HR1OP	10.0	4.0 (BG)	0.001	0.01		
3.7.2 Position retrieval hole cover	10				10.0	4.0	0.001	0.01		
3.7.3 Install hole cover	10				10.0	4.0	0.001	0.01		
3.7.4 Attach anchor points	10				10.0	4.0	0.001	0.01	0.04	1.13
3.7.5 Monitor hole	20			HR1RM	20.0	4.0	0.001	0.02	0.02	0.02
3.7.6 Certify closure	20			HR1QC	20.0	4.0	0.001	0.02	0.02	0.12
	80	640								
4.0 RAMP ACCESS:										
4.1 Transporter Ramp Access;			RA2							
4.1.1 Move transporter with facility cask from retrieval access point up ramp	20			RA2D	20.0	4.0 (TR)	0.005	0.1		
4.1.2 Proceed to surge storage	10				10.0	4.0	0.005	0.05	0.15	0.15
4.1.3 Accept transporter	10			RA2RM	10.0	4.0	0.005	0.05	0.05	0.05
4.1.4 Align facility cask and attach to surge storage port	10			RA2OP	10.0	4.0	0.005	0.05	0.05	0.05
	50	50								
4.2 Waste Package Unloading;			RA1	RA1SO	105.0	4.0 (RT)	0.01	1.05	1.05	1.05
4.2.1 Remove surge storage port cover	10			RA1OP	5.0	4.0 (RT)	0.01	0.05		
4.2.2 Remove facility cask lid	10				5.0	4.0	0.01	0.05		
4.2.3 Unload waste package	20				10.0	4.0	0.01	0.1		
4.2.4 Replace facility cask lid	10				5.0	4.0	0.01	0.05		
4.2.5 Replace port cover	10				5.0	4.0	0.01	0.05	0.30	0.30
	60	110								
5.0 WASTE PACKAGE TO SURFCE SURGE STORAGE:										
5.1 Moving Acceptable Waste Package;			HP2							
5.1.1 Move acceptable waste package to inspection station	10			HP2OP	10.0	4.0 (RT)	0.01	0.1		
5.1.2 Certify acceptability	20			HP2QC	10.0	4.0	0.01	0.1	0.1	0.1
				HP2RM	10.0	4.0	0.01	0.1	0.1	0.1
5.1.3 Move waste package to storage	10			HP2OP	10.0	4.0	0.01	0.1	0.2	0.2
	40	40								

TABLE 4-11

HORIZONTAL RETRIEVAL OF WASTE
(continued)

Operation Description	Operations Time (min) Ind.	Operations Time (min) Cum.	Crew Number	Crew Member	Exposure: Time (min)	Exposure: Area Number	Exposure: Area Dose Rate (mrem/min)	Exposure: Crew Member Dose (mrem) Ind.	Exposure: Crew Member Dose (mrem) Total	Exposure: Crew Member Dose (mrem) Cum.
6.0 CASK LOADING:										
6.1 Waste Package Loading;			HP1	HP1HO	110.0	4.0 (RT)	0.01	1.1	1.1	1.1
6.1.1 Open hot cell port	10			HP1OP	10.0	4.0 (RT)	0.01	0.1		
6.1.2 Remove inner cask lid	10				10.0	4.0	0.01	0.1		
6.1.3 Inspect lid, seal, and inner cask	10				10.0	4.0	0.01	0.1		
6.1.4 Insert first waste package	10				10.0	4.0	0.01	0.1		
6.1.5 Repeat until cask is full	20				20.0	4.0	0.01	0.2		
6.1.6 Log loading information	10				10.0	4.0	0.01	0.1	0.7	
	70	70								
6.2 Cask Closure;										
6.2.1 Replace inner lid	10			HP1OP	10.0	4.0 (RT)	0.01	0.1		
6.2.2 Close loading port	10				10.0	4.0	0.01	0.1	0.2	0.9
	20	90								
7.0 CASK PREPARATION:										
7.1 Removal of Cask from Hot Cell;			S3							
7.1.1 Remove cask from port	10			S3OP	2.0	3.3	0.32	0.64		
7.1.2 Move cask to prep area	20				4.0	4.0	0.01	0.04	0.68	
	30	30								
7.2 Cask Preparation for Carrier Loading;										
7.2.1 Remove cask-to-hot cell adaptor	15			S3OP	10.0	1.3	0.05	0.5		
7.2.2 Tighten inner lid bolts	40				35.0	1.1	0.27	9.45		
7.2.3 Replace outer lid	5				2.0	2.2	0.10	0.20		
7.2.4 Tighten outer lid bolts	40				35.0	1.3	0.05	1.75	11.90	12.58
	100	130								
8.0 CARRIER LOADING:			S2	S2RO	110.0	4.0 (BG)	0.001	0.11	0.11	0.11
8.1 Inspect for Radiation Levels;										
8.1.1 Measure penetrating radiation	30			S2RM	1.0	2.1	0.008	0.008		
8.1.2 Measure alpha contamination	P				1.0	2.3	0.55	0.55		
8.1.3 Temporarily fix alpha	P				1.0	2.4	0.42	0.42		
					1.0	1.2	0.007	0.007		
					1.0	1.4	1.28	1.28		
					1.0	1.5	0.77	0.77		
					0.5	1.2	0.007	0.004		
					0.5	1.4	1.28	0.64		
					0.5	1.5	0.77	0.385	4.06	4.06
	30	30								

TABLE 4-11

HORIZONTAL RETRIEVAL OF WASTE
(concluded)

Operation Description	Operations Time (min) Ind.	Operations Time (min) Cum.	Crew Number	Crew Member	Exposure Time (min)	Exposure Area Number	Exposure Area Dose Rate (mrem/min)	Exposure Crew Member Dose (mrem) Ind.	Exposure Crew Member Dose (mrem) Total	Exposure Crew Member Dose (mrem) Cum.
8.2 Load Cask on Carrier;										
8.2.1 Move cask to trans lock	10			S2OP	2.0	2.3	0.55	1.1		
8.2.2 Attach yoke to cask	5				3.0	1.2	0.007	0.021		
8.2.3 Transfer cask to carrier	10				5.0	4.0 (BG)	0.001	0.005		
8.2.4 Lower cask to horizontal	10				5.0	4.0	0.001	0.005		
8.2.5 Remove yoke	5				2.0	1.2	0.007	0.014		
8.2.6 Attach tiedowns	20				4.0	1.3	0.05	0.2		
					4.0	1.4	1.28	5.12		
8.2.7 Close personnel barrier	20				0.5	2.1	0.008	0.004		
					0.5	2.4	0.42	0.21	6.68	
	80	110								
8.3 Transfer of Carrier;										
8.3.1 Move to inspection area	10			S2OP	1.0	2.1	0.008	0.008	0.008	6.69
8.3.2 Inspect carrier, barrier, and cask	20			S2OC	1.0	3.1	0.005	0.005		
					1.0	3.3	0.32	0.32		
					1.0	3.4	0.29	0.29		
					1.0	2.1	0.008	0.008		
					1.0	2.3	0.55	0.55		
					1.0	2.4	0.42	0.42		
					1.0	1.2	0.007	0.007		
					1.0	1.4	1.28	1.28		
					1.0	1.5	0.77	0.77		
8.3.3 Attach seals	10				2.0	2.1	0.008	0.016		
					2.0	2.3	0.55	1.1		
					2.0	2.4	0.42	0.84	5.61	5.61
8.3.4 Certify release	P									
8.3.5 Move to outgoing parking	10			S2D	10.0	4.0 (BG)	0.001	0.01	0.01	0.01
	50	160								
9.0 SHIPPING CARRIER:			S1							
9.1 Carrier Inspection;										
9.1.1 Move carrier to gate	10			S1OP	10.0	4.0 (BG)	0.001	0.01	0.01	0.01
9.1.2 Measure penetrating radiation	10			S1RM	10.0	4.0 (BG)	0.001	0.01	0.01	0.01
9.1.3 Compare with DOT limits	P									
9.1.4 Inspect carrier	5			S1QC	0.5	3.1	0.005	0.025		
					0.5	3.3	0.32	0.16		
					0.5	3.4	0.29	0.145		
9.1.5 Inspect security seals	5				0.5	2.1	0.008	0.004		
					0.5	2.2	0.55	0.275		
					0.5	2.3	0.42	0.21	0.80	0.80
	30	30								
9.2 Release Carrier;										
9.2.1 Confirm shipping papers	10			S1G	5.0	4.0 (BG)	0.001	0.005	0.005	0.005
9.2.2 Release carrier with cask	P									
	10	40								

TABLE 4-12

ANNUAL RECEIVING NUMBERS FOR WASTE CASKS

Waste Type	Annual Assembly or Canister Receipt	Cask Assembly or Canister Capacity		Annual Cask Receipt [a]		
		Truck	Rail	Truck	Rail	Total
Spent Fuel:						
PWR	2,165 [b]	1	12	653	126	779
BWR	2,730 [b]	2	32	405	60	465
Subtotal	4,895					1,244
High-Level Waste:						
DHLW	660 [c]	1	12	204	38	242
CHLW	500 [c]	1	5	50	90	140
Subtotal	1,160					382
TOTAL						1,626

a. Based on a maximum percentage of truck transport (30%) and a minimum of rail transport (70%) yielding the highest number of annual cask receipts (Dennis, 1983).

b. Assemblies.

c. Canisters.

TABLE 4-13

ANNUAL HANDLING AND PACKAGING, VERTICAL AND HORIZONTAL EMPLACEMENT, AND RETRIEVAL NUMBERS FOR WASTE CANISTERS

		Emplacement and Retrieval			
		Vertical		Horizontal	
Waste Type	Annual Number of Canisters	Waste Packages/ Hole	Annual Number of Holes	Waste Packages/ Hole	Annual Number of Holes
Spent Fuel:					
PWR	361	1	361	37	10
BWR	152	1	152	35	5
Subtotal	513		513		15
High-Level Waste:					
CHLW	660	1	660	53	13
DHLW	500	1	500	53	10
Subtotal	1,160		1,160		23
TOTAL	1,673		1,673		38

TABLE 4-14

ANNUAL RECEIVING AND HANDLING AND PACKAGING TIMES FOR SPENT FUEL AND HIGH-LEVEL WASTE CREWS

Waste Form	Operation	Crew	Operation Time (min)	Annual Number Casks or Canisters	Annual Total Time (min)	Annual Total Time (hr)
Spent Fuel						
	1.0 Receiving (R):	R1	140	1,244	174,160	2,905
		R2	225	1,244	279,900	4,665
		R3	355	1,244	441,620	7,360
	2.0 Handling and Packaging (HP):	HP1	130	1,244	161,720	2,695
		HP2	330	1,244	410,520	6,840
High-Level Waste						
	1.0 Receiving (R):	R1	140	382	53,480	890
		R2	225	382	85,950	1,435
		R3	355	382	135,610	2,260
	2.0 Handling and Packaging (HP):	HP1	120	1,160	139,200	2,320
		HP2	40	1,160	46,400	775

TABLE 4-15

ANNUAL TIMES FOR SHAFT AND RAMP ACCESS CREWS

Operation	Crew	Operation Time (min)	Annual Number Canisters	Annual Total Time (min)	Annual Total Time (hr)
3.0 Surface Storage to Emplacement Horizon:					
3.1 Shaft Access (SA);	SA1	120	1,673	200,760	3,345
	SA2	75	1,673	125,480	2,090
	SA3	50	1,673	83,650	1,395
3.2 Ramp Access (RA);	RA1	90	1,673	150,570	2,510
	RA2	50	1,673	83,650	1,395

TABLE 4-16

ANNUAL TIMES FOR VERTICAL AND HORIZONTAL EMPLACEMENT CREWS

Operation	Crew	Operation Time (min)	Annual Number Emplacement Holes	Annual Total Time (min)	Annual Total Time (hr)
4.1 Vertical Emplacement (VE);	VE1	410	1,673	685,930	11,430
	VE2	255	1,673	426,615	7,110
4.2 Horizontal Emplacement (HE);	HE1	1,280	38	48,640	810
	HE2	110	1,673	184,030	3,065

TABLE 4-17

ANNUAL TIMES FOR VERTICAL AND HORIZONTAL RETRIEVAL CREWS

Operation	Crew	Operation Time (min)	Annual Number Retrieval Holes, Canisters, or Casks	Annual Total Time (min)	Annual Total Time (hr)
5.0 Retrieval:					
5.1 Vertical Retrieval (VR);	VR1	420	1,673	702,660	11,710
	VR2	295	1,673	493,535	8,225
5.2 Horizontal Retrieval (HR);	HR1	1,120	38	42,560	710
	HR2	110	1,673	184,030	3,070
6.0 Ramp Retrieval (RA), Handling and Packaging (HP), and Shipping (S):	RA2	50	1,673	83,650	1,395
	RA1	60	1,673	100,380	1,675
	HP2	40	1,673	66,920	1,115
	HP1	90	1,673	150,570	2,510
	S3	130	551*	71,630	1,195
	S2	160	551	88,160	1,470
	S1	40	551	22,040	370

* Assumes 382 casks of HLW and 169 casks of consolidated spent fuel for a total of 551 casks.

TABLE 4-18

CREW MEMBER WORKER NUMBERS

Operation	Crew	Crew Member	Total Number of Workers
1.0 Receiving (R):	R1	R1G	2
		R1RM	2
		R1QC	2
		R1OP	1
	R2	R2RO	2
		R2D	2
		R2RM	4
		R2QC	4
		R2OP	4
	R3	R3RM	4
		R3OP	8
2.0 Handling and Packaging (HP):	HP1	HP1HO	4
		HP1OP	4
	HP2	HP2HO	4
		HP2QC	2
		HP2RM	2
		HP2OP	6
3.0 Surface Storage to Emplacement Horizon:			
3.1 Shaft Access (SA);	SA1	SA1SO	2
		SA1OP	2
		SA1RM	1
	SA2	SA2OP	2
	SA3	SA3OP	1
		SA3D	1
3.2 Ramp Access (RA);	RA1	RA1SO	2
		RA1OP	2
	RA2	RA2OP	1
		RA2RM	1
		RA2D	1

TABLE 4-18

CREW MEMBER WORKER NUMBERS
(continued)

Operation	Crew	Crew Member	Total Number of Workers
4.0 Emplacement:			
4.1 Vertical Emplacement (VE);	VE1	VE1EO	2
		VE1OP	8
		VE1QC	2
		VE1RM	2
	VE2	VE2OP	4
4.2 Horizontal Emplacment (HE);	HE1	HE1EO	1
		HE1OP	2
		HE1QC	1
		HE1RM	1
	HE2	HE2OP	2
5.0 Retrieval:			
5.1 Vertical Retrieval (VR);	VR1	VR1RO	4
		VE1RM	2
		VE1QC	2
		VR1OP	8
	VR2	VR2OP	6
5.2 Horizontal Retrieval (HR);	HR1	HR1RO	1
		HR1RM	1
		HR1OP	1
		HR1QC	1
	HR2	HR2OP	2
6.0 Ramp Retrieval (RA), Handling and Packaging (HP), and Shipping (S):	RA2	RA2D	1
		RA2RM	1
		RA2OP	1
	RA1	RA1SO	1
		RA1OP	1

TABLE 4-18

CREW MEMBER WORKER NUMBERS
(concluded)

Operation	Crew	Crew Member	Total Number of Workers
	HP2	HP2OP	1
		HP2QC	1
		HP2RM	1
	HP1	HP1HO	1
		HP1OP	2
	S3	S3OP	2
	S2	S2RO	1
		S2RM	1
		S2OP	1
		S2QC	1
		S2D	1
	S1	S1OP	1
		S1RM	1
		S1QC	1
		S1G	1

TABLE 4-19

ANNUAL EXPOSURE FOR SPENT FUEL OPERATIONS

Operation	Crew Number	Crew Member	Exposure (mrem)	Annual Number Casks or Canisters	Total Annual Exposure (mrem)
1.0 Receiving (R):	R1	R1G	0.005	1,244	6
		R1RM	0.01	1,244	12
		R1QC	3.06	1,244	3,807
		R1OP	0.005	1,244	6
	R2	R2RO	0.11	1,244	137
		R2D	0.005	1,244	6
		R2RM	5.95	1,244	7,402
		R2QC	2.94	1,244	3,657
		R2OP	2.95	1,244	3,670
	R3	R3RM	0.66	1,244	821
		R3OP	10.76	1,244	13,385
2.0 Handling and Packaging (HP):	HP1	HP1HO	1.1	1,244	1,368
		HP1OP	1.3	1,244	1,617
	HP2	HP2HO	1.75	1,244	2,177
		HP2QC	0.1	513	51
		HP2RM	0.1	513	51
		HP2OP	3.1	1,244	3,856

TABLE 4-20

ANNUAL EXPOSURE FOR HIGH-LEVEL WASTE OPERATIONS

Operation	Crew Number	Crew Member	Exposure (mrem)	Annual Number Casks or Canisters	Total Annual Exposure (mrem)
1.0 Receiving (R):	R1	R1G	0.005	382	2
		R1RM	0.01	382	4
		R1QC	3.02	382	1,154
		R1OP	0.005	382	2
	R2	R2RO	0.11	382	42
		R2D	0.005	382	2
		R2RM	4.06	382	1,551
		R2QC	4.37	382	1,669
		R2OP	3.64	382	1,390
	R3	R3RM	0.96	382	367
		R3OP	14.45	382	5,520
2.0 Handling and Packaging (HP):	HP1	HP1HO	1.1	1,160	1,276
		HP1OP	1.2	1,160	1,392
	HP2	HP2QC	0.1	1,160	116
		HP2RM	0.1	1,160	116
		HP2OP	0.2	1,160	232

TABLE 4-21

ANNUAL EXPOSURE FOR FACILITY OPERATIONS

Operation	Crew Number	Crew Member	Exposure (mrem)	Annual Number Casks or Emplacement Holes	Total Annual Exposure (mrem)
3.0 Surface Storage to Emplacement Horizon:					
3.1 Shaft Access (SA);	SA1	SA1SO	1.05	1,673	1,757
		SA1OP	0.40	1,673	669
		SA1RM	0.05	1,673	84
	SA2	SA2OP	0.30	1,673	502
	SA3	SA3OP	0.10	1,673	167
		SA3D	0.10	1,673	167
3.2 Ramp Access (RA);	RA1	RA1SO	1.05	1,673	1,757
		RA1OP	0.30	1,673	502
	RA2	RA2OP	0.05	1,673	84
		RA2RM	0.05	1,673	84
		RA2D	0.15	1,673	251
4.0 Emplacement:					
4.1 Vertical Emplacement (VE);	VE1	VE1EO	0.11	1,673	184
		VE1OP	0.34	1,673	569
		VE1QC	0.05	1,673	84
		VE1RM	0.02	1,673	34
	VE2	VE2OP	6.89	1,673	11,527
4.2 Horizontal Emplacement (HE);	HE1	HE1EO	0.055	1,673	92
		HE1OP	1.13	38	43
		HE1QC	0.12	38	5
		HE1RM	0.02	38	1
	HE2	HE2OP	5.15	1,673	8,616

TABLE 4-22

ANNUAL EXPOSURE FOR RETRIEVAL OPERATIONS

Operation	Crew Number	Crew Member	Exposure (mrem)	Annual Number Retrieval Holes, Canisters, or Casks	Total Annual Exposure (mrem)
5.0 Retrieval:					
5.1 Vertical Retrieval (VR);	VR1	VR1RO	0.11	1,673	184
		VR1RM	0.03	1,673	50
		VR1QC	0.06	1,673	100
		VR1OP	0.33	1,673	552
	VR2	VR2OP	7.01	1,673	11,728
5.2 Horizontal Retrieval (HR);	HR1	HR1RO	0.11	1,673	184
		HR1RM	0.02	38	1
		HR1OP	1.13	38	50
		HR1QC	0.12	38	5
	HR2	HR2OP	5.15	1,673	8,616
6.0 Ramp Retrieval (RA), Handling and Packaging (HP), and Shipping (S):	RA2	RA2D	0.15	1,673	251
		RA2RM	0.05	1,673	84
		RA2OP	0.05	1,673	84
	RA1	RA1SO	1.05	1,673	1,757
		RA1OP	0.30	1,673	502
	HP2	HP2OP	0.20	1,673	335
		HP2QC	0.10	1,673	167
		HP2RM	0.10	1,673	167
	HP1	HP1HO	1.10	1,673	1,840
		HP1OP	0.90	1,673	1,506
	S3	S3OP	12.58	551	6,932

TABLE 4-22

ANNUAL EXPOSURE FOR RETRIEVAL OPERATIONS (concluded)

Operation	Crew Number	Crew Member	Exposure (mrem)	Annual Number Retrieval Holes, Canisters, or Casks	Total Annual Exposure (mrem)
	S2	S2RO	0.11	551	61
		S2RM	4.06	551	2,237
		S2OP	6.69	551	3,686
		S2QC	5.61	551	3,091
		S2D	0.01	551	6
	S1	S1OP	0.01	551	6
		S1RM	0.01	551	6
		S1QC	0.80	551	441
		S1G	0.005	551	3

5.0 CONCLUSIONS

The annual worker exposures are presented in Table 5-1. These exposures were calculated from the operations times (Tables 4-2 through 4-11), the estimated operations sub-areas and exposure times (Tables 4-2 through 4-11), the annual receival and handling rates for spent fuel and high-level waste casks and canisters (Tables 4-12 and 4-13), the total operations task times (Tables 4-14, 4-15, 4-16, and 4-17), the number of workers for each crew member task (Table 4-18), and the total annual exposure for each crew member task (Tables 4-19, 4-20, 4-21, and 4-22).

The design guideline for annual worker exposure is 1 rem. For emplacement, this level is exceeded in the receiving, vertical emplacement, and horizontal emplacement operations. In the receiving area where the total exposure is the sum of received SF and HLW, the quality control inspectors (R1QC) receive an exposure of 2.48 man-rem. This is due to the amount of time spent inspecting the cask and carrier for structural damage and possible tampering.

The R2 receiving crew radiation monitors (R2RM), quality control inspectors (R2QC), and operators (R2OP) are exposed to 2.24, 1.33, and 1.27 man-rem respectively. The R3 crew operators (R3OP) are exposed to 2.36 man-rem. The operators perform Area 1 operations (near-surface) in the attachment and removal of cask lifting yokes and the loosening and removal of cask lids and bolts. The quality control inspectors perform Area 1 operations during the structural inspection of the carrier with cask and waste package in place. The radiation monitor conducts surface radiation smears and readings within Area 1.

Vertical emplacement (VE) requires more total time than horizontal emplacement (HE) and a greater number of transport/emplacement operators. Therefore, vertical emplacement with a total crew member exposure of 11.53 man-rem (VE2OP) would have an exposure of 2.88 man-rem/yr for each of 4 workers while horizontal emplacement would expose 2 workers to 4.31 man-rem/yr for a total crew member exposure of 8.62 man-rem (HE2OP).

Waste package retrieval exceeds the 1 rem worker exposure design guideline in the vertical retrieval, horizontal retrieval, ramp retrieval, handling and packaging, and shipping operations. As in the emplacement operations, vertical retrieval (VR) requires more total time and personnel per waste package than horizontal retrieval (HR). The greater number of vertical retrieval operators (VR2OP) would receive a total crew member exposure of 11.73 man-rem with an individual exposure of 1.96 man-rem/yr for each of 6 workers while horizontal retrieval would expose 2 workers (HR2OP) to 4.31 man-rem/yr for a total crew member exposure of 8.62 man-rem.

The ramp access storage officer (RA1SO) is exposed to 1.76 manrem/yr and the handling and packaging hot cell officer is exposed to 1.84 man-rem/yr. The two S3 shipping crew operators (S3OP) are exposed to 3.47 man-rem each during the emplacement and tightening of cask lids and bolts. The S2 crew radiation monitor (S2RM), operator (S2OP), and quality control inspector (S2QC) are exposed to 2.24, 3.69, and 3.09 man-rem/yr respectively. These workers perform Area 1 operations on the carriers and casks with the waste packages in place.

All annual exposures are below the 5 rem permissible dose equivalent limit with seven emplacement and eight retrieval crew member positions exceeding the design objective of 1 rem. These individuals perform tasks within Area 1, the near-cask-surface exposure area, and are exposed to the assumed radiation level for the duration of an operation. To reduce these levels near-cask-surface tasks will be performed remotely.

TABLE 5-1

ANNUAL WORKER EXPOSURE

Operation	Crew Number	Crew Member	Total Exposure (rem)	Total Number of Workers	Annual Worker Exposure (man-rem)
1.0 Receiving (R):	R1	R1G	0.008	2	0.004
		R1RM	0.016	2	0.008
		R1QC	4.96	2	2.481
		R1OP	0.008	1	0.008
	R2	R2RO	0.179	2	0.09
		R2D	0.008	2	0.004
		R2RM	8.953	4	2.238
		R2QC	5.326	4	1.332
		R2OP	5.06	4	1.265
	R3	R3RM	1.188	4	0.297
		R3OP	18.905	8	2.363
2.0 Handling and Packaging (HP):	HP1	HP1HO	2.644	4	0.661
		HP1OP	3.009	4	0.752
	HP2	HP2HO	2.177	4	0.544
		HP2QC	0.167	2	0.084
		HP2RM	0.167	2	0.084
		HP2OP	4.088	6	0.681
3.0 Surface Storage to Emplacement Horizon:					
3.1 Shaft Access (SA);	SA1	SA1SO	1.757	2	0.879
		SA1OP	0.669	2	0.335
		SA1RM	0.084	1	0.084
	SA2	SA2OP	0.502	2	0.251
	SA3	SA3OP	0.167	1	0.167
		SA3D	0.167	1	0.167
3.2 Ramp Access (RA);	RA1	RA1SO	1.757	2	0.879
		RA1OP	0.502	2	0.251
	RA2	RA2OP	0.084	1	0.084
		RA2RM	0.084	1	0.084
		RA2D	0.251	1	0.251

TABLE 5-1

ANNUAL WORKER EXPOSURE
(continued)

Operation	Crew Number	Crew Member	Total Exposure (rem)	Total Number of Workers	Annual Worker Exposure (man-rem)
4.0 Emplacement:					
4.1 Vertical Emplacement (VE);	VE1	VE1EO	0.184	2	0.092
		VE1OP	0.569	8	0.071
		VE1QC	0.084	2	0.042
		VE1RM	0.034	2	0.017
	VE2	VE2OP	11.527	4	2.882
4.2 Horizontal Emplacement (HE);	HE1	HE1EO	0.92	1	0.92
		HE1OP	0.043	2	0.022
		HE1QC	0.005	1	0.005
		HE1RM	0.001	1	0.001
	HE2	HE2OP	8.616	2	4.308
5.0 Retrieval:					
5.1 Vertical Retrieval (VR);	VR1	VR1RO	0.184	4	0.046
		VR1RM	0.05	2	0.025
		VR1QC	0.1	2	0.05
		VR1OP	0.522	8	0.069
	VR2	VR2OP	11.728	6	1.955
5.2 Horizontal Retrieval (HR);	HR1	HR1RO	0.184	1	0.184
		HR1RM	0.001	1	0.001
		HR1OP	0.05	1	0.05
		HR1QC	0.005	1	0.005
	HR2	HR2OP	8.616	2	4.308

TABLE 5-1

ANNUAL WORKER EXPOSURE
(concluded)

Operation	Crew Number	Crew Member	Total Exposure (rem)	Total Number of Workers	Annual Worker Exposure (man-(rem)
6.0 Ramp Retrieval (RA), Handling and Packaging (HP), and Shipping (S):	RA2	RA2D	0.251	1	0.251
		RA2RM	0.084	1	0.084
		RA2OP	0.084	1	0.084
	RA1	RA1SO	1.757	1	1.757
		RA1OP	0.502	1	0.502
	HP2	HP2OP	0.335	1	0.335
		HP2QC	0.167	1	0.167
		HP2RM	0.167	1	0.167
	HP1	HP1HO	1.84	1	1.84
		HP1OP	1.506	2	0.753
	S3	S3OP	6.932	2	3.466
	S2	S2RO	0.061	1	0.061
		S2RM	2.237	1	2.237
		S2OP	3.686	1	3.686
		S2QC	3.091	1	3.091
		S2D	0.006	1	0.006
	S1	S1OP	0.006	1	0.006
		S1RM	0.006	1	0.006
		S1QC	0.441	1	0.441
		S1G	0.003	1	0.003

REFERENCES

Dennis, A. W., "Design Considerations for Occupational Exposure for a Potential Repository at Yucca Mountain - High-Level Waste Handling Operations," SAND83-0247C, 1983.

Dennis, A. W., et al., "NNWSI Repository Operational Procedures for Receiving, Packaging, Emplacing, and Retrieving High-Level and Transuranic Waste," SAND83-1166, 1984 (to be published).

GA Technologies, Inc., "Reference Cask Conceptual Descriptions," Process Engineering staff, 1983 (to be published).

O'Brien, P. D., "Characteristics of Waste for a Repository at Yucca Mountain, Nevada," SAND83-1805, 1984 (to be published).

Personal communication, McSweeney, T., September 14, 1982 from C. W. Alexander, Oak Ridge National Laboratory (ORNL).

Personal communication, Shirley, C., April 20, 1983 from C. W. Alexander, Oak Ridge National Laboratory (ORNL).

Wan, M. V. and P. E. Schneringer, "Development of Radiation Dose Rate Maps for Waste Transported in LWT and Rail Casks," GA Technologies, Inc. for Sandia National Laboratories, 1983 (to be published).

DOE/TIC-4500, UC-70 (338)

DISTRIBUTION LIST

J. W. Bennett (RW-20)
Acting Associate Director
Geologic Repository Deployment
U. S. Department of Energy
Washington, D. C. 20545

Ralph Stein (RW-21)
Acting Deputy Associate Director
Geologic Repository Deployment
U. S. Department of Energy
Washington, D. C. 20545

J. G. Vlahakis (RW-21)
Geologic Repository Deployment
U. S. Department of Energy
Washington, D.C. 20545

C. R. Cooley (RW-24)
Acting Director
Geosciences & Technology Division
Geologic Repository Deployment
U. S. Department of Energy
Washington, D.C. 20545

M. W. Frei (RW-23)
Acting Director
Engineering & Licensing Division
Geologic Repository Deployment
U.S. Department of Energy
Washington, D.C. 20545

J. J. Fiore (RW-22)
Acting Director
Program Management Division
Geologic Repository Deployment
U.S. Department of Energy
Washington, D.C. 20545

E. S. Burton (RW-25)
Acting Director
Siting Division
Geologic Repository Deployment
U.S. Department of Energy
Forrestal Building
Washington, D.C. 20585

T. P. Longo (RW-22)
Geologic Repository Deployment
U. S. Department of Energy
Washington, D. C. 20545

Cy Klingsberg (RW-24)
Geologic Repository Deployment
U. S. Department of Energy
Washington, D. C. 20545

J. E. Shaheen (RW-25)
Geologic Repository Deployment
U. S. Department of Energy
Forrestal Building
Washington, D.C. 20585

Chief, High-Level Waste Technical
Development Branch
Division of Waste Management
U. S. Nuclear Regulatory Commission
Washington, D.C. 20555

NTS Project Manager
High-Level Waste Technical
Development Branch
Division of Waste Management
U. S. Nuclear Regulatory Commission
Washington, D.C. 20555

Document Control Center
Division of Waste Management
U.S. Nuclear Regulatory Commission
Washington, D.C. 20555

J. O. Neff, Program Manager
National Waste Terminal
Storage Program Office
U.S. Department of Energy
505 King Avenue
Columbus, OH 43201

C. H. George (RW-3)
Geologic Repository Deployment
U.S. Department of Energy
Washington, D.C. 20545

ONWI Library (5)
Battelle
Office of Nuclear Waste Isolation
505 King Avenue
Columbus, OH 43201

O. L. Olson, Project Manager
Basalt Waste Isolation Project Office
U.S. Department of Energy
Richland Operations Office
P.O. Box 550
Richland, WA 99352

E. B. Ash
Rockwell International Atomics
Rockwell Hanford Operations
Richland, WA 99352

A. A. Metry, Program Manager
Roy F. Weston, Inc.
2301 Research Blvd., 3rd Floor
Rockville, MD 20850

G. Tomsic
Utah Dept. of Community
Economic Development
Room 6290, State Office Bldg.
Salt Lake City, UT 89114

A. Johnson
414 West Ninth Street
Carson City, NV 89701

R. R. Loux, Jr.
Nuclear Waste Project Office
Office of the Governor
State of Nevada
Capitol Complex
Carson City, NV 89710

N. E. Carter
Battelle
Office of Nuclear Waste Isolation
505 King Avenue
Columbus, OH 43201

S. A. Mann, Manager
Crystalline Rock Project Office
U.S. Department of Energy
9800 S. Cass Avenue
Argonne, IL 60439

L. D. Ramspott (3)
Technical Project Officer
Lawrence Livermore National
Laboratory
P.O. Box 808
Mail Stop L-204
Livermore, CA 94550

D. C. Hoffman
Los Alamos National Laboratory
P.O. Box 1663
Mail Stop E-515
Los Alamos, NM 87545

D. T. Oakley (3)
Technical Project Officer
Los Alamos National Laboratory
P.O. Box 1663
Mail Stop F-671
Los Alamos, NM 87545

T. Hay, Executive Assistant
Office of the Governor
State of Nevada
Capitol Complex
Carson City, NV 89710

R. W. Lynch
Sandia National Laboratories
P. O. Box 5800
Organization 6300
Albuquerque, NM 87185

T. O. Hunter (4)
Technical Project Officer
Sandia National Laboratories
P. O. Box 5800
Organization 6310
Albuquerque, NM 87185

K. Street, Jr.
Lawrence Livermore National
Laboratory
P.O. Box 808
Mail Stop L-209
Livermore, CA 94550

W. W. Dudley, Jr. (3)
Technical Project Officer
U.S. Geological Survey
P.O. Box 25046
Mail Stop 418
Federal Center
Denver, CO 80225

M. E. Spaeth (3)
Technical Project Officer
Science Applications, Inc.
2769 South Highland Drive
Las Vegas, NV 89109

D. L. Vieth, Director (8)
Waste Management Project Office
U.S. Department of Energy
P.O. Box 14100
Las Vegas, NV 89114

D. A. Nowack (14)
Office of Public Affairs
U.S. Department of Energy
P. O. Box 14100
Las Vegas, NV 89114

A. E. Gurrola, General Manager
Energy Support Division
Holmes & Narver, Inc.
P.O. Box 14340
Las Vegas, NV 89114

P. T. Prestholt
NRC Site Representative
Federal Building
Room 323
300 Las Vegas Blvd. South
Las Vegas, NV 89101

W. R. McDonnell
Operational Planning Division
E.I.DuPont de Nemours & Co., Inc.
Savannah River Laboratory
Aiken, SC 29808

A. R. Hakl, Manager
Westinghouse Electric Corporation
Waste Technology Services Division
Nevada Operations
P.O. Box 708
Mail Stop 703
Mercury, NV 89203

J. A. Cross, Manager
Las Vegas Branch
Fenix & Scission, Inc.
P.O. Box 15408
Las Vegas, NV 89114

W. S. Twenhofel
820 Estes Street
Lakewood, CO 80215

D. F. Miller, Director
Office of Public Affairs
U.S. Department of Energy
P.O. Box 14100
Las Vegas, NV 89114

B. W. Church, Director
Health Physics Division
U.S. Department of Energy
P.O. Box 14100
Las Vegas, NV 89114

H. D. Cunningham
General Manager
Reynolds Electrical &
Engineering Co., Inc.
P.O. Box 14400
Mail Stop 555
Las Vegas, NV 89114

Louelle Clark
Battelle Northwest Labs
Richland, WA 99352

J. L. Younker (50)
Science Applications, Inc.
2769 South Highland Drive
Las Vegas, Nevada 89109

Bechtel National, Inc. (5)
Attn: Neil Norman
50 Beale Street
P.O. Box 3965
San Francisco, CA 94119

Ray Mulkin
J. C. Frostenson
K. J. Hong
Los Alamos Technical Associates
P.O. Box 410
1650 Trinity Drive
Los Alamos, NM 87544

6310 T. O. Hunter
6311 L. W. Scully
6312 F. W. Bingham
6313 J. R. Tillerson
6311 A. W. Dennis (15)
6311 L. Perrine (2)
3141-1 C. M. Ostrander (5)
3151 W. L. Garner (3)
8424 M. A. Pound

GA Technologies, Inc. (5)
Attn: Malcolm P. LaBar
P.O. Box 81608
San Diego, CA 92138

☆U.S. GOVERNMENT PRINTING OFFICE:1984—776-027 / 4300