GUPTA

SANDIA REPORT

SAND84—2641
Unlimited Release
Printed September 1987

Nevada Nuclear Waste Storage Investigations Project

Site Characterization Plan Conceptual Design Report

Volume 1 Chapters 1-3

Compiled by Hugh R. MacDougall, Leo W. Scully, Joe R. Tillerson

Prepared by
Sandia National Laboratories
Albuquerque, New Mexico 87185 and Livermore, California 94550
for the United States Department of Energy
under Contract DE-AC04-76DP00789

Issued by Sandia National Laboratories, operated for the United States Department of Energy by Sandia Corporation.

NOTICE: This report was prepared as an account of work sponsored by an agency of the United States Government. Neither the United States Government nor any agency thereof, nor any of their employees, nor any of their contractors, subcontractors, or their employees, makes any warranty, express or implied, or assumes any legal liability or responsibility for the accuracy, completeness, or usefulness of any information, apparatus, product, or process disclosed, or represents that its use would not infringe privately owned rights. Reference herein to any specific commercial product, process, or service by trade name, trademark, manufacturer, or otherwise, does not necessarily constitute or imply its endorsement, recommendation, or favoring by the United States Government, any agency thereof or any of their contractors or subcontractors. The views and opinions expressed herein do not necessarily state or reflect those of the United States Government, any agency thereof or any of their contractors or subcontractors.

Printed in the United States of America
Available from
National Technical Information Service
U.S. Department of Commerce
5285 Port Royal Road
Springfield, VA 22161

NTIS price codes
Printed copy: A10
Microfiche copy: A01

SAND84-2641
Unlimited Release
Printed September 1987

SITE CHARACTERIZATION PLAN CONCEPTUAL DESIGN REPORT
Volume 1

Compiled by

H. R. MacDougall, L. W. Scully, and J. R. Tillerson
Nevada Nuclear Waste Storage Investigations Department
Sandia National Laboratories
Albuquerque, New Mexico 87185

Engineering design information provided by

Bechtel National, Inc.
San Francisco, California 94119

and

Parsons Brinckerhoff Quade & Douglas, Inc.
San Francisco, California 94109

ABSTRACT

This document presents a description of a prospective geologic repository for high-level radioactive waste to support the development of the Site Characterization Plan for the Yucca Mountain site. This conceptual design has been developed for the Department of Energy's Nevada Nuclear Waste Storage Investigations Project by Sandia National Laboratories and its supporting contractors.

The site for the prospective repository is located at Yucca Mountain in southwestern Nevada, and the waste emplacement area will be constructed in the underlying volcanic tuffs. The target horizon for waste emplacement is a sloping bed of densely welded tuff more than 650 ft below the surface and typically more than 600 ft above the water table. The conceptual design described in this report is unique among repository designs in that (1) it uses ramps in addition to shafts to gain access to the underground facility, (2) the emplacement horizon is located above the water table, and (3) it is possible that 300- to 400-ft-long horizontal waste emplacement boreholes will be used.

In addition to describing the design and operations, this report summarizes the design bases (site and properties of the waste package), design and performance criteria, and the design analyses performed. The current status of meeting the preclosure performance objectives for licensing and of resolving the repository design and preclosure issues is presented. The repository design presented in this report will be expanded and refined during the advanced conceptual design, the license application design, and the final procurement and construction design phases.

FOREWORD

This report and supporting appendices document the status, as of September 1986, of the conceptual design of a prospective geologic repository for high-level radioactive waste at Yucca Mountain, Nevada. This design differs in some details from that presented in the Environmental Assessment for the Yucca Mountain site and will continue to evolve as site characterization and design work proceed. The information presented in this report supports the design description presented in Chapter 6 of the Site Characterization Plan for the Yucca Mountain site.

ACKNOWLEDGMENTS

The conceptual design for a repository at Yucca Mountain, Nevada, was prepared under the direction of Sandia National Laboratories (SNL), Albuquerque, Department 6310, with the assistance of its architect/engineers, Bechtel National, Inc. (BNI), and Parsons Brinckerhoff Quade & Douglas (PBQD). Lawrence Livermore National Laboratory and Los Alamos National Laboratory provided support for the waste package and exploratory shaft designs, respectively. Los Alamos Technical Associates, Inc. (LATA), provided technical and editorial support in the preparation of this Site Characterization Plan Conceptual Design Report.

H. R. MacDougall, L. W. Scully, and J. R. Tillerson compiled this report. The following individuals were contributing authors:

A. Badie (PBQD)
E. B. Barnett (LATA)
S. J. Bauer (SNL)
F. W. Bingham (SNL)
B. M. Bohlke (PBQD)
R. I. Brasier (LATA)
J. B. Case (IT Corporation)
T. E. Eglinton (SNL)
B. L. Ehgartner (SNL)
C. D. DeGabriele (BNI)
A. W. Dennis (SNL)
J. A. Fernandez (SNL)
R. J. Flores (SNL)
M. E. Fowler (PBQD)
J. C. Frostenson (LATA)
D. A. Glowka (SNL)
J. D. Grenia (PBQD)
E. R. Gruer (SNL)
R. Harig (PBQD)
R. R. Hill (SNL)
T. E. Hinkebein (SNL)
L. J. Jardine (BNI)
P. C. Kelsall (IT Corporation)
T. W. Laub (SNL)
C. W. Ma (BNI)
H. R. MacDougall (SNL)
A. J. Mansure (SNL)
D. D. Miller (BNI)
N. A. Norman (BNI)
P. D. O'Brien (SNL)
J. M. Redenbo (BNI)
R. R. Richards (SNL)
R. M. Robb (LATA)
R. C. Sit (BNI)
Z. W. Stachon (BNI)
A. L. Stevens (SNL)
R. E. Stinebaugh (SNL)
C. St. John (Agbabian)
W. S. Streeter (PBQD)
C. V. Subramanian (SNL)
J. R. Tillerson (SNL)
P. Tillery (LATA)
K. Wallace (Mine Ventilation Services)
M. L. Wheeler (LATA)
C. L. Wu (BNI)
G. Yeager (SNL)
D. P. Zerga (PBQD).

Technical reviewers, who reviewed the first drafts of the text, were R. I. Brasier, H. R. MacDougall, L. W. Scully, and J. R. Tillerson. Comprehensive peer reviews of Chapters 1-5 and 6-9 were conducted during two-day meetings held in Albuquerque in November 1986 and January 1987. Participants in these reviews were representatives of the Department of Energy (USDOE/OCRWM-OGR and USDOE/NV-WMPO); Los Alamos Technical Associates, Inc.; Sandia National Laboratories; Roy F. Weston, Inc.; and Science Applications International Corporation.

Coordination of technical writing and supervision of editing were provided by E. B. Barnett and M. L. Wheeler. The technical editing and editing support staff consisted of

S. R. Daniels (LATA)
V. A. Herring (LATA)
C. A. Horne (LATA)
P. M. Hummer (LATA)
J. Kuszmaul (LATA)
S. Loebs (LATA)
I. Mitchell (LATA).

Drafting and graphics were provided by

V. Anderson (PBQD)
M. M. Christen (LATA)
L. C. Flaming (LATA)
M. E. Ferdinand (LATA)
C. Gabriele (BNI)
S. Grymes (BNI)
K. C. Hayes (PBQD)
E. K. Hohn (BNI)
J. Martinez (LATA).

Typing was provided by Creative Computer Services, Inc.

Production was managed by

C. Lucero (LATA)
R. A. Morley (LATA)
R. F. Seylar (LATA)
R. H. Shaw (LATA).

EXECUTIVE SUMMARY

The Nuclear Waste Policy Act (NWPA) of 1982 assigns responsibility to the Department of Energy (DOE) for the siting, design, construction, and operation of geologic repositories for the disposal of spent nuclear fuel and other high-level radioactive waste. In 1986, in accordance with the NWPA, the DOE selected three candidate sites in three different media--tuff, salt, and basalt--for site characterization, a process that involves collecting detailed geologic and hydrologic data for use in preparing the advanced designs for the repository.

Several years ago, the DOE organized the Nevada Nuclear Waste Storage Investigations (NNWSI) Project to investigate tuff as a potential medium for a repository at Yucca Mountain. Yucca Mountain is located on and adjacent to the Nevada Test Site in Nye County, Nevada (Figure ES-1), and is one of the three sites selected for characterization. The underground portion of the repository, in which the waste will be emplaced, lies above the water table and beneath Yucca Mountain in a welded tuff formation. The central surface facilities, which include the major waste-handling facilities and contiguous support structures, are located on the east side of Yucca Mountain. The repository is designed to receive, prepare, and permit emplacement of the equivalent of 70,000 metric tons of heavy metal [commonly expressed as metric tons of uranium (MTU)] initially loaded in commercial power reactors. This design is consistent with the stipulation in the NWPA that the first repository accommodate 70,000 MTU until such time as a second repository is in operation.

Design is an iterative process, and the design of the Yucca Mountain repository is continuously evolving. This "Nevada Nuclear Waste Storage Investigations Project Site Characterization Plan Conceptual Design Report" (SCP-CDR) describes the repository design as it has evolved from studies conducted since the preparation of "The Nevada Nuclear Waste Storage Investigations Project Preliminary Repository Concepts Report" in 1983. The preliminary concept was based on a repository constructed in a single stage that included a single waste-handling building to receive and process spent fuel and high-level waste.

To increase confidence in being able to accept waste for disposal according to the waste acceptance schedule set forth in the DOE's 1985 Mission Plan, the conceptual design calls for the construction of the repository in two stages. This approach involves concurrent construction of two waste-handling buildings, the first of which would be designed to receive the equivalent of 400 MTU/yr of waste. The first waste-handling building would operate for 3 years, during which time construction of a full-capacity, 3,000-MTU/yr waste-handling building would be completed. The two-stage approach to repository construction is described in a report entitled "Two-Stage Repository Construction at Yucca Mountain: An Engineering Feasibility Study" and provides the basis for the design used in the Environmental Assessment (EA) for the repository in tuff. The design in the EA reflects the conceptual design as it existed before May 1985. The conceptual design described in this document has evolved still further. The changes include, for example, changes in the underground layout, the level of the underground facility, waste receipts, and the location of the disposal area for site-generated waste.

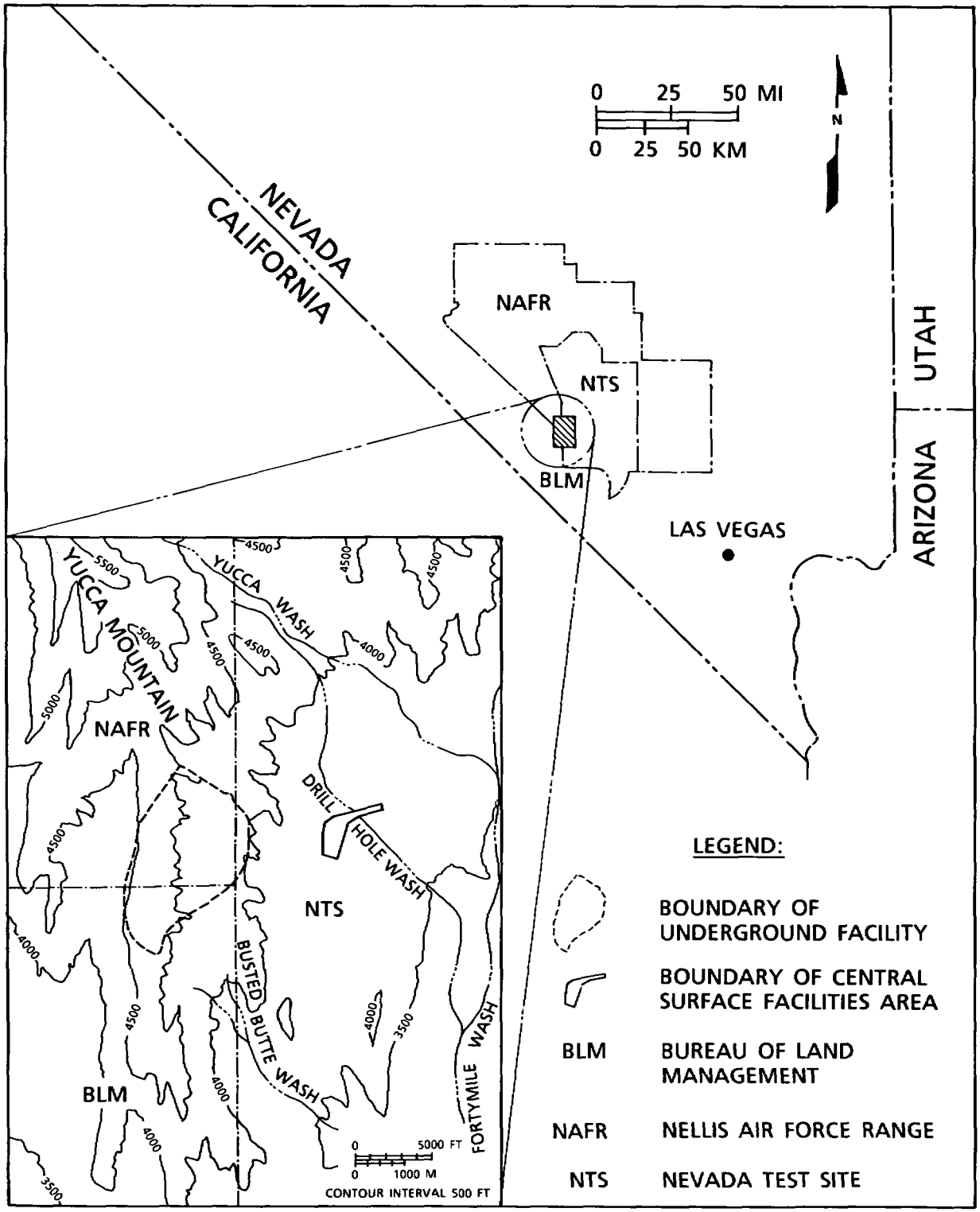

Figure ES-1. Location of Yucca Mountain Site in Southern Nevada (Modified from the U.S. Department of Energy, Office of Civilian Radioactive Waste Management, "Environmental Assessment, Yucca Mountain Site, Nevada Research and Development Area, Nevada," DOE/RW-0012, Washington, D.C., 1986.)

A new waste acceptance schedule, which will be presented in the Mission Plan Amendment when it is finalized, will be used for the advanced conceptual design (ACD). Current assessments indicate that the design changes that would result from using the new schedule would not have a significant effect on plans for site characterization.

This SCP-CDR contains nine chapters, a glossary, a list of acronyms, and supporting appendices. A summary of each chapter is provided below.

Chapter 1--Introduction

The first chapter describes the project history and past design efforts, the purpose of the conceptual design, the regulatory background, and the scope of the design.

Chapter 2--Bases for the SCP Conceptual Design

Chapter 2 summarizes data, requirements, and criteria used in the development of the conceptual design described in this report. To ensure consistency in the design, the data, requirements, and criteria are controlled by a Reference Information Base (RIB). The data contained in the draft RIB are presented in Appendix Q. Appendix Q contains only the reference values related to the site, which were the only reference values established at the time the conceptual design was prepared. Future versions of the RIB will contain completed sets of reference values for the site, repository, and waste package.

The design of the repository is determined by the two design bases (principal components of the repository) described in Chapter 2: the radioactive waste to be emplaced at the repository and the site at which that waste will be emplaced. Spent fuel from both pressurized-water reactors and boiling-water reactors will be emplaced at the repository, as well as some defense high-level waste (DHLW) and West Valley high-level waste (WVHLW). The quantities, receipt rates, and characteristics of these wastes and the current designs for the waste containers are described in Section 2.1.

The repository-site design basis is derived from physical data collected and interpreted during pre-site-characterization and unit selection studies. Site characteristics are important because they influence the location and layout of the surface and subsurface facilities. In particular, the geologic characteristics of the site form a framework for defining the hydrologic, thermal, and mechanical properties of the rock, which are needed to design specific elements of the underground facilities. These characteristics are described in detail in Section 2.2. Section 2.3 summarizes the principal design values used in considering the geomechanical, meteorological, seismological, and human-induced phenomena on which the conceptual design is based.

Chapter 2 (Sections 2.4 and 2.6) also discusses the design criteria, which are requirements placed on specific repository systems, structures, and components. These requirements are derived from law, policy, and regulations issued by various government agencies. Figure ES-2 is a simplified representation of how design requirements evolve from laws and

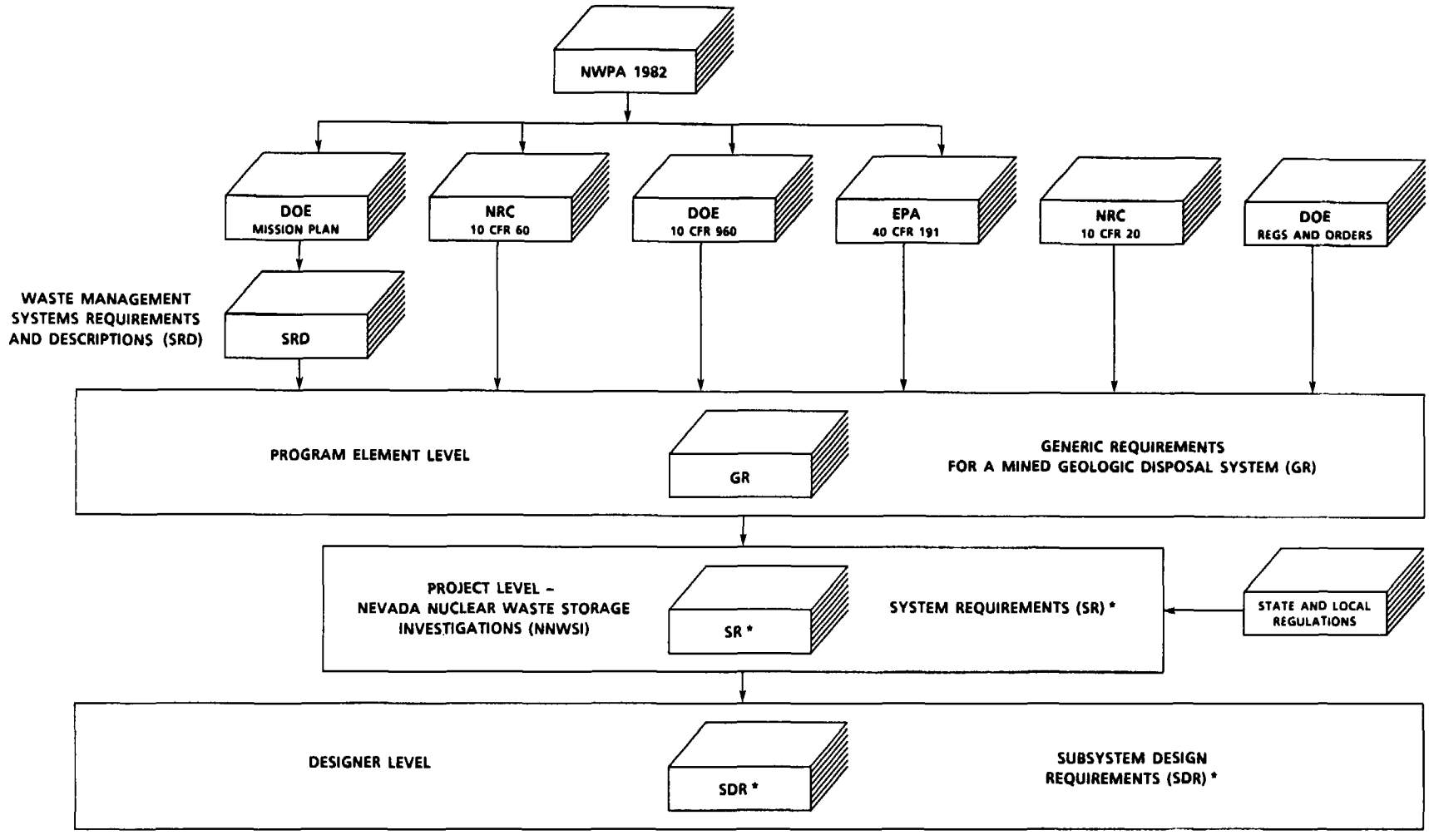

* THESE DOCUMENTS ARE CURRENTLY PUBLISHED AS APPENDICES TO THE SCP-CDR.
[SDR IS CURRENTLY BEING REVISED AND WILL BE TITLED "REPOSITORY DESIGN REQUIREMENTS" (RDR)].

Figure ES-2. Simplified Representation of How Design Requirements Evolve from Laws and Regulations (Figure provided for use in the SCP-CDR by the Office of Civilian Radioactive Waste Management.)

regulations. The primary federal directives are (1) the DOE's Mission Plan, which states the broad basis for anticipating the kinds of scientific, engineering, and environmental information required for a repository and identifies a hierarchy of unresolved questions for which information can be collected to provide answers; (2) 10 CFR 60, which provides standards for the disposal of high-level radioactive waste in geologic repositories; (3) 10 CFR 960, which provides general guidelines for evaluating the suitability of nuclear waste repositories; (4) 40 CFR 191, which provides environmental protection standards for the management and disposal of spent nuclear fuel, high-level, and transuranic radioactive wastes; (5) 10 CFR 20, which provides standards for protection against radiation; and (6) various DOE Orders pertaining to design and environmental protection. Appropriate federal, state, and local laws and regulations have been considered and incorporated where these laws and regulations are more stringent.

From these directives, the DOE has prepared a Generic Requirements (GR) document, which identifies the requirements for a mined geologic disposal system (MGDS) at the program level. The NNWSI Project has, in turn, derived from the GR the system requirements specific to a repository in tuff. Yet more detailed requirements, for use in subsequent design phases, will be provided by a forthcoming Repository Design Requirements (RDR) document specific to the NNWSI Project.

Section 2.5 contains a discussion of the radiological characteristics that have been used in developing the conceptual design for the repository at Yucca Mountain. These parameters are those aspects or properties of the radioactive waste and its handling that must be considered in the repository design to ensure the safety of both repository personnel and the public.

Section 2.7 discusses the identification and classification of systems, structures, and components important to safety and the list of items and activities important to waste isolation. The items important to waste isolation have been compiled in a list called a "Q-List." Both the items on the Q-List and the activities list are subject to the quality assurance (QA) requirements given in 10 CFR 60.

Chapter 3--Repository

Chapter 3 provides the current concepts for the principal operations to be performed at the repository, including mining operations for the development of the underground facility and waste-handling operations such as receipt, preparation, storage, transport, disposal, and potential retrieval of the waste. Descriptions, flow diagrams, and schematics are provided for the systems and equipment needed to perform these operations. The system concepts and equipment that need development are identified. Block flow diagrams showing the principal functions, conceptual flow diagrams showing the equipment used in operations, and lists of major equipment identified in the flow diagrams are provided.

The primary surface facilities are the two waste-handling buildings, the waste treatment building, and the performance confirmation building. These buildings, as well as the ramp portals, shaft collars, and a cutaway of the underground facility, are shown in Figure ES-3.

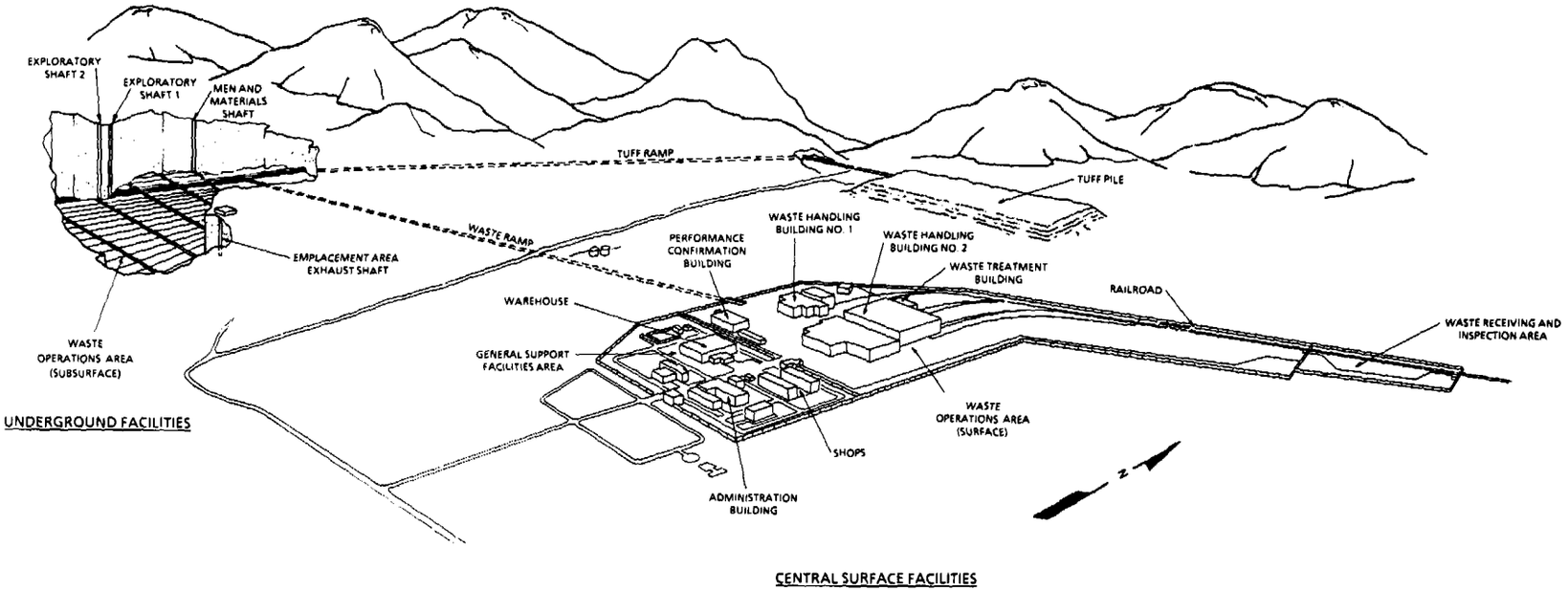

Figure ES-3. Tuff Repository Perspective Sketch (Modified from the U.S. Department of Energy, Office of Civilian Radioactive Waste Management, "Environmental Assessment, Yucca Mountain Site, Nevada Research and Development Area, Nevada," DOE/RW-0012, Washington, D.C., 1986.)

Two waste emplacement configurations--horizontal or vertical--are currently being considered for the emplacement of waste underground. In the vertical configuration, a single waste container is placed in a vertical borehole drilled in the drift floor. In the horizontal configuration, a number of containers are inserted in a long horizontal borehole drilled into the drift wall. The selection of the preferred emplacement configuration will consider the economic and technical advantages and disadvantages of the two configurations. The final decision is expected to be made during the ACD phase.

According to the schedules developed in the 1985 Mission Plan, the construction and testing of Waste-Handling Building 1 (WHB-1) and the construction of the emplacement area for Stage 1 will be completed in 53 mo after a construction authorization has been received from the Nuclear Regulatory Commission (NRC). Construction of Waste-Handling Building 2 (WHB-2) will begin at the same time but will take 90 mo for completion (Figure ES-4). When WHB-1 has been completed, it will receive unconsolidated commercial spent fuel at a rate of 400 MTU/yr for 3 yr. During the transition from Stage 1 to Stage 2, spent fuel will be handled in both WHB-1 and WHB-2 at a combined rate of 900 MTU during the fourth year of operation and 1,800 MTU in the fifth year. From the 6th through 25th years, WHB-1 may be used for preparing DHLW and WVHLW for disposal. The cumulative total of DHLW and WVHLW that may be handled during this period at WHB-1 is 8,000 MTU. WHB-2 will handle 3,000 MTU/yr of spent fuel. The cumulative total of spent fuel that may be handled at WHB-2 between the 6th and 25th years is 58,100 MTU.

Caretaker operations begin with the emplacement of the last waste package, in the 26th year after first waste emplacement, and are scheduled to continue through the period of completion of the performance confirmation program (assumed to be the 50th year for design purposes) and NRC review of the license amendment for permanent closure. Permanent closure, when the surface facilities are removed and the underground facility and accesses are backfilled and sealed, will occur either after the caretaker period or after waste retrieval. Closure operations are expected to take about 25 yr to complete.

The ability to retrieve emplaced spent fuel or high-level radioactive waste for the purposes of protecting the public and the environment and for possible economic use is stipulated by the Mission Plan. Consistent with Appendix D of the DOE's 1986 GR, it is assumed for design purposes that the period of retrievability is a maximum of 50 yr. This period begins when the first waste is emplaced and lasts through the completion of the performance confirmation program. It is assumed that actual retrieval, if required, will take 34 yr, approximately the same amount of time as that needed for repository construction and waste emplacement.

The overall layout of the underground facility, which includes the development area (area being prepared for waste emplacement) and the emplacement area, is essentially the same in both the vertical and horizontal emplacement configurations. Mining and construction in the development area and emplacement of waste in the waste emplacement area are conducted concurrently. The development and emplacement areas are serviced by separate ventilation systems and are separated by bulkheads to minimize airflow between the two areas.

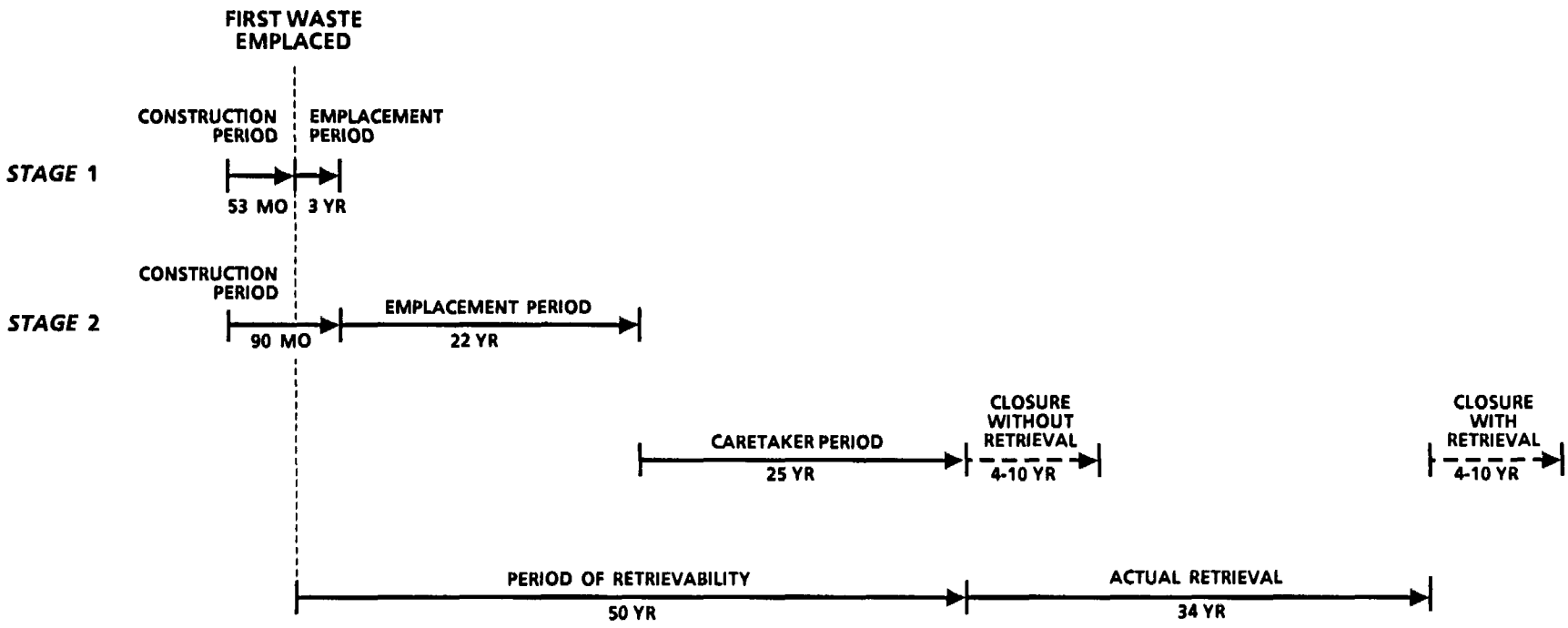

Figure ES-4. Schedule for Repository at Yucca Mountain (U.S. Department of Energy, Office of Civilian Radioactive Waste Management, "Mission Plan for the Civilian Radioactive Management Program," DOE/RW-0005, Washington, D.C., 1985, and U.S. Department of Energy, "Generic Requirements for a Mined Geologic Disposal System," DOE/NE/44301-1, Office of Civilian Radioactive Waste Management, Washington, D.C., 1984.)

In the current design concept, spent fuel and DHLW are emplaced in the same drift to achieve a better distribution of the heat generated by the emplaced waste. To emplace the various waste types at the required rate, the construction of at least two emplacement drifts will be completed before waste emplacement has been completed in the preceding drifts.

Several types of openings are provided for development and waste emplacement activities. These openings include

- a waste ramp through which all waste is carried from the central surface facilities to the underground facility;
- a tuff ramp, which contains a belt conveyor to haul excavated tuff to the surface and the main electrical feeder for the underground facility; this ramp also serves as the primary exhaust airway for the development area;
- four shafts--two for providing fresh air to the waste emplacement area, one for men and materials and for providing fresh air to the development area, and one for exhausting air from the waste emplacement area; and
- various types of access drifts leading to the emplacement drifts.

The ground support methods proposed for the drifts and ramps are described. These methods respond to the various types of discontinuities (joints, fractures, fault zones, and shear zones) that occur in the rock at Yucca Mountain. The rock-mass classification studies and recommendations for ground support that result from those studies are described. The site characterization program will provide the more detailed data needed to assign detailed ground support designs to individual drifts.

Section 3.4 describes the ventilation system and the amounts of air needed in the subsurface facilities. Ventilation is provided by two separate, continuously operating ventilation systems: one provides air for development activities and the other for waste emplacement operations. To ensure that air leakage occurs only from the development side to the emplacement side, pressure differentials are established between the systems. The pressure differentials are maintained by using pushing fans at the intake for the development side and pulling fans at the exhaust point on the emplacement side. The paths for air intake and exhaust for the two systems are completely separate. The performance of the ventilation systems at strategic locations is monitored continuously at surface and underground control centers.

Chapter 4--Design Description

Section 4.1 describes the site and its environs, including the location, climate, population, economy, and existing infrastructure. A detailed description of the facilities and equipment lists is provided.

Section 4.2 describes the surface facilities. The central surface facilities (Figure ES-3) consist of three functional areas--the waste-receiving and inspection area (where incoming trucks and railcars arrive

and are inspected), the surface portion of the waste operations area (which includes all buildings in which radioactive material is handled or stored), and the general support facilities area (administrative buildings, security stations, warehouses, etc.). Other surface facilities located outside the central surface facilities area and the utilities system are described. The process used for selecting the locations of the surface facilities and the location of accesses to the underground facility is presented.

The waste-handling buildings are located in the surface portion of the waste operations area. The major features of WHB-1 consist of the cask-receiving and shipping areas, cask preparation area, cask-unloading hot cell, cask decontamination station, remote maintenance and contact maintenance areas, the surface storage vault (in which packaged waste is stored until it can be taken to the subsurface facility for emplacement), and a personnel annex. The design of WHB-2 is similar to that of WHB-1, except that WHB-2 is larger and contains the hot cells and equipment necessary to consolidate and package spent fuel. Both buildings are equipped with heating, ventilating, air-conditioning, and filtering systems to ensure the safety and comfort of personnel, to maintain the integrity and operability of equipment and components, and to restrict the spread of airborne contamination from the buildings during operation.

Section 4.3 describes in detail the design and outfitting of the shafts and ramps, the methods for selecting their location, the sequence and methods of construction, hoisting arrangements, and methods of sealing openings to prevent the intrusion of any ground water encountered during construction.

Section 4.4 presents the basic design assumptions used for the underground facility and provides a detailed description of the underground layout, including the dimensions of the openings, emplacement panels, and arrangement of maintenance shops and service areas. It also discusses how the exploratory shafts will be incorporated in the repository. In the current design, the exploratory shafts are used for ventilation intakes for the emplacement area. It is not currently planned to use these shafts to support construction of the underground facility.

Section 4.5 describes the equipment used during normal repository operations to transport, emplace, and retrieve the waste; underground construction other than mining of the openings; and the facilities and equipment for underground ventilation during normal operations.

The last section presents a list of items potentially important to safety, places the waste container on a preliminary list of engineered barriers important to waste isolation, and presents a preliminary list of activities important to waste isolation. The methodology for developing these lists is described in Section 7.4.

Chapter 5--Closure and Decommissioning

A primary concern in closing the repository is that the accesses from the surface not provide preferential pathways for the movement of water and radionuclides from the emplaced waste to the environment.

Permanent closure of the repository involves sealing the shafts, ramps, and exploratory boreholes as necessary to meet NRC requirements. Closure will not be initiated until the performance confirmation program has satisfactorily demonstrated to the NRC that the repository can meet long-term performance objectives for containment and isolation of the waste.

Chapter 5 describes the activities involved in closure of the subsurface facilities. These activities include removing and salvaging usable equipment, sealing or backfilling the drifts, sealing the shafts and ramps, and sealing exploratory boreholes.

Although conceptual design studies show that there is no necessity, from a hydrologic viewpoint, to backfill the underground openings, backfill may be beneficial in local areas that have a potential for groundwater inflow through faults or fracture zones. Backfill could dissipate a sudden inflow into a drift; it could also prevent a major collapse of a relatively incompetent fault or fracture zone.

The selection of suitable backfilling and sealing materials, and methods of emplacing the seals or backfill, will be based on the intended function of the backfill or seal. Chapter 5 describes the various materials that are suitable for use and others that are being developed to be chemically compatible with the tuff at elevated temperatures.

Design concepts have been developed for a number of ways of sealing the subsurface facilities, including sumps and drains, dams, grouting in fractured rock, bulkheads, and grouting around boreholes. Surface barriers will be constructed around shafts and ramps to divert surface runoff and to discourage human intrusion. The major components of the design are a massive surface cover that resists erosion, a shaft-collar core (which is made of low-permeability material and extends through the alluvium), and a dense plug or bulkhead keyed into the surface of the bedrock. An earth fill will be emplaced in the shaft below the surface barrier. If it is necessary to limit settlement of the fill in the shafts, plugs of concrete will be installed. Plugs will also be installed at the intersections of drifts with shafts. The concepts for sealing ramps are similar to those for the shafts.

Exploratory boreholes must be sealed to impede the downward flow of water from the emplacement horizon (Topopah Spring Member) to the water table. The critical zone to be sealed is the nonwelded unit of the Calico Hills, immediately beneath the Topopah Spring Member. A special cement grout is being developed for sealing boreholes.

A plan for decommissioning the repository must be submitted as part of the license application (LA) to the NRC. Section 5.4 describes the contents of the decommissioning plan and the current concepts for decommissioning the repository. It also identifies the major surface facilities that will be decommissioned and how those facilities can be designed to facilitate the decommissioning process.

Chapter 6--Performance Objectives

Chapters 6, 7, and 8 are closely related. Chapter 6 describes the performance objectives for the repository established by the NRC. To

identify the design information needed to meet these objectives, the DOE has established an issues hierarchy consisting of "key issues," "issues," and "information needs," which are described in Chapter 8. Chapters 6 and 7 describe how the design of the repository is responsive to performance objectives and the supporting design analyses, respectively. These two chapters also serve as "pointer" chapters, which lead the reader to the detailed discussion of the issues in Chapter 8.

Chapter 6 presents the approaches to design, design features, and the operating procedures used to ensure that radiation exposures and the releases of radioactive materials meet the performance objectives given by the NRC in 10 CFR 60 [including 10 CFR 20 and the standards established by the Environmental Protection Agency (EPA) in 40 CFR 191]. Chapter 6 also describes how the repository will meet NRC performance objectives for retrieval and long-term containment and isolation of the waste.

Releases of radioactive material can occur at the repository as liquids, solids, and gases. Section 6.1 identifies the main sources of liquid wastes (decontamination and vehicle washdown solutions, laundry drains, and slurries produced by flushing casks), solid wastes (filters and other wastes categorized, treated, and disposed of according to their compactibility and combustibility), and gaseous wastes (noble gases and tritium). Methods of collecting, treating, disposing of, and monitoring these wastes are identified, and the ventilation systems that control particulate and gaseous emissions are described.

Section 6.2 describes releases under abnormal conditions and the design features considered to mitigate these releases, based on design-basis accidents (DBA). The methods for establishing a set of DBAs include the setting of design parameters and criteria and the systematic identification, development, and screening of accident scenarios, including the initiating events. The possible initiating events being studied are in-plant events (accidents in the waste-handling systems, inadvertent releases of radioactive materials, fires, and collapse of structural components), severe natural phenomena (earthquakes; extreme winds and tornadoes; and extreme precipitation, flooding, and sandstorms), and man-made events initiated offsite (airplane crashes, loss of offsite electrical power, military activities, underground nuclear explosions, etc.). The status, plans, and schedule for the development of DBAs are summarized.

Once the design parameters and criteria have been established, a set of DBAs is defined and the response of the systems, structures, and components to the DBAs is analyzed. For those DBAs in which the release has the potential for producing exposures in excess of 0.5 rem to the maximally exposed individual, the adequacy of the design will be evaluated. At this point, features to prevent or mitigate releases must be identified. The strategy being developed to identify and design systems, structures, and components used to prevent or mitigate offsite releases from postulated DBAs is presented.

Estimates of offsite dose consequences have been made, taking into account site-specific factors such as release rates, quantities of radionuclides, and local meteorological conditions. These estimates are

preliminary and have been used to develop a preliminary list of items important to safety. A more specific determination of DBAs, estimates of offsite dose consequences, and initial identification of specific engineered safety systems used for the prevention or mitigation of offsite releases during DBAs will be made during ACD studies.

Section 6.3 describes normal and off-normal retrieval conditions. Normal conditions include continued usability of the drifts, ramps, and ventilation system, and acceptable air quality, radiation levels, and borehole and container conditions. Off-normal conditions have a lower probability of occurrence than do normal conditions and will likely necessitate the use of nonstandard equipment and procedures.

Because retrieval operations are a planned contingency, the facilities and equipment needed to accomplish full retrieval will not be constructed during initial construction of the repository. The repository is being designed so that the retrievability requirement will not compromise the safety of the repository or its ability to isolate the waste. The design will include the capability of retrieval under off-normal conditions and will be based on technology that is reasonably available at the time of LA. This section highlights aspects of the design of the facilities and equipment needed for retrieval and the proof-of-principle and prototype equipment demonstrations that will be necessary during the later stages of design and construction.

Section 6.4 summarizes the design features and operating procedures used to reduce adverse effects on the waste isolation system. One feature that could affect isolation is the design of the underground openings. The stability of these openings as it affects isolation of the wastes is discussed in this section.

A second design feature important to waste isolation is the layout of the underground facility. The design must be flexible enough to accommodate expected variations in site characteristics, including the thermomechanical properties of the host rock, in situ stress, stratigraphic characteristics, the location of faults, and the presence of joints and fractures. These characteristics influence the layout of the drifts, panels, and emplacement boreholes.

Rock excavation methods are a third consideration in developing a design that reduces adverse effects on the waste isolation system. The methods expected to be most appropriate for excavating the shafts and ramps, emplacement boreholes, access drifts, and emplacement drifts are described.

A fourth consideration in designing the underground facility for isolation and containment is the thermal stresses induced by the emplaced waste. The need to select the allowable areal power density (APD) and to design a waste emplacement layout consistent with that APD and near- and far-field performance objectives is discussed in Section 6.4. The design must be evaluated to ensure that levels of damage to the rock mass as a result of thermally induced loads are within an acceptable range.

A final consideration is that openings can create preferential pathways for releases of radioactive material to the accessible environment.

Section 6.4 discusses the methods used to assess whether openings compromise repository performance and describes the use of seals to mitigate any adverse effects.

Section 6.5 describes the general scope, function, and content of the performance confirmation program, including the general regulatory basis for the program, the required elements of the complete program plan as interpreted by the DOE, and preliminary performance confirmation program plans developed specifically for the conceptual design of a repository at Yucca Mountain. This program is an integral part of the licensing process required by 10 CFR 60 and is designed to ensure that tests, experiments, and analyses conducted before permanent closure will permit accurate and adequate assessments of postclosure performance. Section 6.5 identifies and describes those facilities specifically dedicated to the performance confirmation program and the current state of development of the performance confirmation program plan, including the continued development, verification, and validation of computer codes to be used in the program.

Chapter 7--Design Analyses

Chapter 7 describes the design analyses performed for both the preclosure and postclosure periods; the engineering analysis of the design; and the analyses of systems, structures, and components important to safety and waste isolation. The processes involve establishing basic objectives and requirements for the repository, investigating site characteristics, and performing analyses to support selection of design features that satisfy the overall facility requirements and are compatible with site conditions.

Chapter 7 describes the steps in the analyses, which consist of (1) development of design and functional criteria; (2) setting design and functional constraints; (3) development of performance criteria; (4) compilation of data available for use in design analyses; (5) preparation of the design; and (6) analysis of the design to verify compliance with design and functional constraints, to optimize the design by performing tradeoff studies, and to determine the quantity of additional data needed (sensitivity studies).

The specific design analyses performed for the conceptual design are described in Section 7.1. The major analyses performed on the surface are those for (1) the soils and foundations, (2) the probable maximum flood at the men-and-materials shaft, (3) seismicity, (4) wind and tornado, (5) water storage and distribution, (6) waste throughputs and time lines, (7) site-generated radioactive waste, (8) normal and standby electrical power, and (9) monitoring systems.

The analyses performed for the underground elements--stability of underground openings, analyses of seismic and weapons tests loads, control of water in the drifts, and underground ventilation systems--are also described. These analyses were performed to support selection of design features that satisfy overall facility requirements and are compatible with site conditions.

A series of studies has been performed to ensure that the design of the repository contributes to waste isolation and containment after closure, as specified in 10 CFR 60.131-133, and to provide the basis for establishing design requirements placed on the preclosure design process by postclosure concerns. Section 7.2 describes these studies and the performance allocation approach selected to determine design goals.

The analyses of the underground facility during the postclosure period are directed at determining the extent of thermal and mechanical perturbations that result from the heat produced by decaying radionuclides. For purposes of design and analysis, these effects have been divided into near-field and far-field effects.

The analysis of the postclosure design is complicated by the heterogeneity of the host rock with respect to its thermal and mechanical properties, by the need to predict thermal and mechanical responses over a long period of time, and by the fact that the constitutive relationships for tuffaceous rocks and jointed rocks are still being developed. These complications have necessitated the use of several analytic techniques in an effort to arrive at consistent predictions of the responses of the host rock.

Section 7.2 describes the analytic tools developed to predict heat-transfer mechanisms, continuum mechanics, and constitutive relationships and includes a list and descriptions of the computer codes used for postclosure analysis. It describes the concept of APD, modeling considerations, studies completed for far- and near-field effects, and work to be done in the future.

Section 7.3 describes the engineering analysis of the design, including the analyses of site characteristics and construction techniques that affect the design. The effect of constructing the exploratory shaft facility on the integrity of the repository and the use of the exploratory shafts during the operating period are also examined. The results of these analyses and a description of future work are provided.

Section 7.4 describes the process used to determine what items are important to safety and what items and activities are important to waste isolation. In response to 10 CFR 60, Subpart G, these items are recorded on a preliminary Q-List. In 10 CFR 60.2, "items important to safety" are defined as "...those engineered structures, systems, and components essential to the prevention or mitigation of an accident that could result in a radiation dose to the whole body, or any organ, of 0.5 rem or greater at or beyond the nearest boundary of the unrestricted area at any time until the completion of permanent closure."

The determination of items important to safety is based on a preliminary radiological safety analysis described in this section. The process follows probabilistic risk assessment methods. The results of the analyses showed that no items in the proposed repository design are clearly judged to be important to safety, although several features of the surface facility are potentially important to safety and will be carefully evaluated before LA.

Items important to waste isolation are not specifically defined in 10 CFR 60. For purposes of this report, the NNWSI Project has defined these items as the barriers, structures, systems, and components that are relied on to achieve the postclosure performance objectives given in 10 CFR 60, Subpart E. The engineered barriers that meet this definition, including the waste container, are placed on a Q-List. The natural barriers that meet this definition are not placed on the Q-List because they cannot be designed; instead, their ability to isolate the waste is given special protection through an "activities list." This list contains all the activities that might adversely affect the waste isolation capabilities of the welded portion of the Topopah Spring Member, the Calico Hills nonwelded zeolitic unit, the Calico Hills nonwelded vitric unit, and the saturated zone.

Chapter 8--Design Issues

This chapter presents the status of information pertaining to the resolution of design and performance issues identified by the DOE. Design issues address needs for information about the design of the repository, seals, and waste package. Performance issues address questions regarding compliance with regulatory requirements that are related to the performance of the MGDS.

Chapter 8 is organized according to the "key issues" presented in the DOE's Mission Plan and the issues hierarchy that supports the key issues. Key issues are defined as broad-level technical or institutional requirements grouped in four topical areas: (1) postclosure performance; (2) preclosure radiological safety; (3) preclosure environment, socioeconomic concerns, and transportation issues; and (4) preclosure technical feasibility and cost effectiveness. "Issues" are subsets of key issues and address the questions that must be answered to satisfy the key issue. "Information needs" identify the information needed to answer the questions posed by the issues. The information needs are developed independently for each candidate repository site according to the specific requirements identified for the prospective location. The strategy and plans for resolving all of the issues are described in detail in Chapter 8 of the Site Characterization Plan for Yucca Mountain.

The issues presented in Chapter 8 include all those for which additional site-specific information must be obtained during the site characterization process in order to complete the design process. One other issue is presented, repository system cost effectiveness (Issue 4.5), for which site characterization data are not needed.

Two issues relating to postclosure and eight issues pertaining to preclosure are discussed in detail in Sections 8.2 and 8.3, respectively. In Section 8.2, the postclosure issues are framed as questions that ask whether the characteristics and configurations of the engineered barriers and shafts and borehole seals have been adequately established to (1) show compliance with the postclosure design criteria of 10 CFR 60 and (2) provide information to support resolution of the performance issues. The two postclosure issues are Configuration of Underground Facilities (Issue 1.11) and Seal Characteristics (Issue 1.12).

The preclosure issues addressed in Section 8.3 pertain to

- Public Radiological Exposures--Normal Conditions (Issue 2.1),
- Worker Radiological Safety--Normal Conditions (Issue 2.2),
- Accidental Radiological Releases (Issue 2.3),
- Repository Design Criteria for Radiological Safety (Issue 2.7),
- Waste Retrievability (Issue 2.4),
- Nonradiological Health and Safety (Issue 4.2),
- Preclosure Design and Technical Feasibility (Issue 4.4), and
- Repository System Cost Effectiveness (Issue 4.5).

The information needs for each issue are listed, and the information presented includes the status of the issue, data used, results of analyses, and plans for future work.

Section 8.4 discusses the interface with several design issues that are not fully resolved by the repository design activity but that require information from the repository design for their resolution. These issues pertain to postclosure compliance of the waste package with 10 CFR 60.135; waste package production technologies to support resolution of performance issues; and all design-related questions pertaining to environment, socioeconomic concerns, and transportation.

Section 8.5 describes future work that must be performed to complete resolution of design and performance issues.

Chapter 9--Quality Assurance Program

The QA program for the NNWSI Project is described in the "NNWSI Quality Assurance Plan," which applies to the DOE's Waste Management Project Office and to all project participants and their subcontractors. This program has been designed in accordance with the requirements of 10 CFR 60.

A graded approach has been established for applying the QA program to repository-related activities. In this approach, items and activities are assigned one of three QA levels explained in Chapter 9, which are based primarily on the importance of the items and activities to public health and safety and waste isolation. Reliability, maintainability, and worker safety are also considered. The plan provides a detailed description of the three QA levels and their attendant programmatic requirements.

TABLE OF CONTENTS

VOLUME I	Page
Foreword	iii
Acknowledgments	v
Executive Summary	vii
Table of Contents	xxv
1.0 Introduction	1-1
1.1 NNWSI Project History and Past Design Efforts	1-1
1.2 Purpose of the Conceptual Design	1-2
1.3 Regulatory Background	1-4
1.4 Scope of the Design	1-4
1.5 Organization of the Report	1-5
References for Chapter 1	1-7
2.0 Bases for the SCP Conceptual Design	2-1
2.1 Waste Types and Packages	2-2
2.1.1 Waste Types	2-2
2.1.1.1 Spent Fuel	2-2
2.1.1.2 Spent Fuel Hardware	2-2
2.1.1.3 Defense High-Level Waste	2-3
2.1.1.4 West Valley High-Level Waste	2-3
2.1.1.5 Site-Generated Waste	2-3
2.1.2 Waste Quantities	2-3
2.1.3 Waste Package Design	2-3
2.2 Site	2-7
2.2.1 Introduction	2-7
2.2.2 Terrain	2-7
2.2.3 Geology	2-9
2.2.3.1 Stratigraphy	2-9
2.2.3.2 Structure	2-15
2.2.3.3 Three-Dimensional Model of Thermal/ Mechanical Stratigraphy	2-17
2.2.4 Hydrologic Considerations	2-17
2.2.4.1 Surface Water	2-20
2.2.4.2 Ground Water	2-20

TABLE OF CONTENTS
(continued)

		Page
2.2.5	Near-Surface Soil and Rock	2-23
2.2.6	Flood Zones	2-23
2.2.7	Archaeological Resources	2-25
2.3	Data and Assumptions	2-25
2.3.1	Rock Properties	2-26
2.3.1.1	Bulk Properties	2-26
2.3.1.2	Deformability Properties	2-28
2.3.1.3	Strength Properties	2-33
2.3.1.4	Geometric Characteristics of Discontinuities	2-37
2.3.1.5	Thermal Properties	2-41
2.3.1.6	Coefficient of Thermal Expansion	2-41
2.3.1.7	Thermal Conductivity	2-41
2.3.1.8	Thermal Capacitance	2-41
2.3.1.9	In Situ Stress and Temperature	2-44
2.3.2	Climate and Weather	2-45
2.3.2.1	Sources of Meteorological Data	2-45
2.3.2.2	Meteorological Parameters for Design	2-45
2.3.3	Natural and Human-Induced Phenomena	2-47
2.3.3.1	Ground Motion	2-47
2.3.3.2	Wind and Tornadoes	2-49
2.3.3.3	Floods	2-50
2.4	Design Requirements	2-51
2.4.1	Derivation of Repository Design Requirements	2-51
2.4.1.1	Program Requirements	2-51
2.4.1.2	Project Level Requirements	2-51
2.4.1.3	Design Level Requirements	2-51
2.4.2	Functional Design Requirements for the Repository Facilities	2-52
2.4.3	Radiological Exposures to the Public	2-52
2.4.4	Retrievability	2-60
2.4.4.1	Retrievability Requirements	2-60
2.4.4.2	Retrieval Philosophy	2-61
2.4.4.3	Development of Design Criteria	2-63
2.4.5	Waste Isolation	2-66

TABLE OF CONTENTS
(continued)

	Page
2.4.5.1 Site	2-66
2.4.5.2 Repository	2-67
2.4.5.3 Waste Package	2-68
2.5 Radiation Protection	2-68
2.5.1 Radiation Exposure Concerns	2-69
2.5.2 Design Considerations	2-71
2.5.2.1 External Radiation	2-71
2.5.2.2 Surface Contamination	2-71
2.5.2.3 Airborne Contamination	2-72
2.5.2.4 Liquid Releases	2-73
2.5.2.5 Criticality Safety Considerations	2-73
2.6 Regulatory Requirements	2-74
2.6.1 Nuclear Waste Policy Act of 1982	2-74
2.6.2 Federal Regulations	2-74
2.6.3 State Requirements	2-79
2.7 Classification of Systems, Structures, and Components Important to Safety and Waste Isolation	2-79
2.7.1 Items Important to Safety	2-80
2.7.2 Items Important to Waste Isolation	2-81
References for Chapter 2	2-83
3.0 Repository	3-1
3.1 Waste Handling and Disposal	3-4
3.1.1 Waste Handling in Surface Facilities	3-4
3.1.1.1 Receiving	3-4
3.1.1.2 Preparation	3-23
3.1.1.3 Waste-Handling Equipment	3-24
3.1.2 Underground Waste-Handling and Disposal Operations	3-24
3.1.2.1 Vertical Emplacement	3-24
3.1.2.2 Horizontal Emplacement	3-37
3.1.2.3 Equipment Availability	3-45
3.2 Waste Retrieval	3-51
3.2.1 Retrieval Philosophy	3-51
3.2.2 Waste Retrieval Operations	3-53

TABLE OF CONTENTS
(continued)

	Page
3.2.2.1 Retrieval Operations Under Normal Conditions	3-54
3.2.2.2 Retrieval Operations Under Off-Normal Conditions	3-57
3.3 Underground Development	3-65
3.3.1 Access and Drift Development	3-65
3.3.1.1 Mining Methods	3-65
3.3.1.2 Handling of Excavated Tuff	3-79
3.3.1.3 Ground Support Methods	3-79
3.3.1.4 Excavation and Construction Sequence	3-87
3.3.1.5 Underground Development Equipment	3-92
3.3.2 Excavation of Emplacement Boreholes	3-92
3.3.2.1 Vertical Emplacement Configuration	3-92
3.3.2.2 Horizontal Emplacement Configuration	3-97
3.3.3 Underground Support and Maintenance Operations	3-101
3.3.4 Caretaker Phase	3-105
3.4 Ventilation	3-106
3.4.1 General Overview and Description of the System	3-107
3.4.2 Vertical Emplacement Configuration	3-111
3.4.2.1 Maximum Ventilation Airflow Requirements for the Development Area	3-111
3.4.2.2 Maximum Ventilation Requirements for the Waste Emplacement Area	3-118
3.4.2.3 Requirements for Cooling Air	3-119
3.4.3 Horizontal Emplacement Configuration	3-120
3.4.3.1 Maximum Ventilation Requirements for the Development Area	3-120
3.4.3.2 Maximum Ventilation Requirements for the Waste Emplacement Area	3-121
3.4.3.3 Air-Cooling Requirements	3-121
3.4.4 Comparison of the Ventilation and Cooling Systems for the Vertical and Horizontal Emplacement Configurations	3-125
References for Chapter 3	3-135
Distribution List	DL-1

TABLE OF CONTENTS
(continued)

VOLUME 2	Page
4.0 Design Description	4-1
4.1 The Site and Its Environs	4-1
4.1.1 Location and Climate	4-1
4.1.2 Population and Economy	4-3
4.1.3 Infrastructure	4-3
4.2 Surface Facilities	4-9
4.2.1 Site Access	4-9
4.2.1.1 Railroad	4-9
4.2.1.2 Highway	4-13
4.2.1.3 Helipad	4-13
4.2.2 Overall Site Arrangement	4-13
4.2.2.1 Location of the Underground Facility	4-13
4.2.2.2 Location of the Surface Facilities and Waste Ramp	4-13
4.2.2.3 Location of the Tuff Ramp and Tuff Pile	4-18
4.2.2.4 Location of Other Entries to the Underground Facility	4-20
4.2.3 Layout of Surface Facilities	4-20
4.2.3.1 Central Surface Facilities Area	4-20
4.2.3.2 Shaft and Ramp Areas	4-23
4.2.4 Description of Facilities	4-27
4.2.4.1 Waste-Handling Buildings	4-34
4.2.4.2 Support Facilities for Repository Operations	4-55
4.2.4.3 General Support Facilities	4-67
4.2.4.4 Support Facilities at Shafts and Ramps	4-69
4.2.5 Utilities	4-74
4.2.5.1 Power	4-74
4.2.5.2 Chilled-Water System	4-74
4.2.5.3 Communications	4-74
4.2.5.4 Fuel	4-75
4.2.5.5 Water	4-75
4.2.5.6 Sewage	4-75
4.2.5.7 Sanitary Landfill	4-76
4.3 Shafts and Ramps	4-76

TABLE OF CONTENTS
(continued)

		Page
4.3.1	Access Functions	4-76
4.3.2	Description of Accesses	4-77
4.3.2.1	Waste Ramp	4-77
4.3.2.2	Tuff Ramp	4-77
4.3.2.3	Exploratory Shafts	4-81
4.3.2.4	Men-and-Materials Shaft	4-85
4.3.2.5	Emplacement Area Exhaust Shaft	4-85
4.3.2.6	Seals and Linings	4-85
4.3.3	Hoisting Arrangements	4-91
4.3.3.1	Exploratory Shafts	4-91
4.3.3.2	Men-and-Materials Shaft	4-91
4.3.3.3	Emplacement Area Exhaust Shaft	4-95
4.4	Underground Facilities	4-95
4.4.1	Design Methodology	4-95
4.4.2	Description of Underground Design	4-96
4.4.2.1	Description of Common Features	4-105
4.4.2.2	Description of Emplacement Panels	4-109
4.4.3	Underground Systems	4-129
4.4.3.1	Ventilation Control System	4-129
4.4.3.2	System for Handling Mined Tuff	4-130
4.4.3.3	Utilities	4-132
4.4.3.4	Water-Handling System	4-133
4.4.3.5	Data Acquisition and Monitoring System	4-134
4.5	Normal Repository Operations	4-135
4.5.1	Development of Emplacement Drifts	4-135
4.5.1.1	Drift Construction	4-135
4.5.1.2	Installation of Utilities	4-137
4.5.1.3	Underground Ventilation System	4-138
4.5.2	Development of Emplacement Boreholes	4-139
4.5.2.1	Vertical Emplacement Boreholes	4-139
4.5.2.2	Horizontal Emplacement Boreholes	4-139
4.5.3	Waste Emplacement Operations	4-140
4.5.3.1	Vertical Configuration	4-141
4.5.3.2	Horizontal Configuration	4-146

TABLE OF CONTENTS
(continued)

	Page
4.5.4 Waste Removal Operations for Performance Confirmation	4-148
4.5.4.1 Vertical Configuration	4-152
4.5.4.2 Horizontal Configuration	4-152
4.6 Systems, Structures, and Components Important to Safety or Waste Isolation	4-155
4.6.1 Items Important to Safety	4-155
4.6.2 Items Important to Waste Isolation	4-157
References for Chapter 4	4-159
5.0 Closure and Decommissioning	5-1
5.1 Closure of the Underground Facilities	5-1
5.1.1 Removal of Operating Equipment	5-1
5.1.2 Backfilling of Underground Openings	5-2
5.1.2.1 Functions	5-2
5.1.2.2 Design Concepts	5-2
5.1.3 Sealing of Underground Facilities	5-5
5.1.3.1 General Requirements	5-5
5.1.3.2 Design Concepts	5-5
5.2 Sealing of Shafts and Ramps	5-12
5.2.1 Functions of Seals	5-12
5.2.2 Design Concepts for Shaft Seals	5-12
5.2.2.1 Surface Barrier	5-15
5.2.2.2 Shaft Fill	5-17
5.2.2.3 Settlement Plugs	5-17
5.2.2.4 Station Plug	5-18
5.2.3 Design Concepts for Ramp Seals	5-18
5.3 Sealing of Exploratory Boreholes	5-22
5.3.1 Functions	5-22
5.3.2 Design Concepts	5-22
5.4 Decommissioning of the Surface Facilities	5-27
5.4.1 Current Decommissioning Concepts	5-27
5.4.2 Design of Major Surface Facilities Requiring Decommissioning	5-28

TABLE OF CONTENTS
(continued)

	Page
5.4.3 Surface Facilities Requiring Decontamination	5-29
5.4.3.1 Waste-Handling Buildings	5-29
5.4.3.2 Waste Treatment Building	5-29
5.4.3.3 Performance Confirmation Building	5-30
5.4.3.4 Decontamination Building	5-30
5.4.3.5 Emplacement Area Exhaust Building	5-30
References for Chapter 5	5-31
6.0 Performance Objectives	6-1
6.1 Radioactive Releases During Normal Operations	6-1
6.1.1 Liquid Effluents	6-3
6.1.1.1 Sources and Quantities	6-3
6.1.1.2 Treatment and Operations	6-4
6.1.1.3 Waste Disposal	6-5
6.1.2 Solid Waste	6-5
6.1.2.1 Sources and Quantities	6-5
6.1.2.2 Treatment Operations	6-7
6.1.2.3 Disposal Options for Site-Generated Waste	6-8
6.1.3 Gaseous Waste	6-10
6.1.3.1 Particulate Releases	6-10
6.1.3.2 Gaseous Releases	6-10
6.1.3.3 General Surface Ventilation Systems	6-11
6.1.4 Site Monitoring	6-12
6.1.4.1 Radiological Protection Monitoring	6-12
6.1.4.2 Environmental Monitoring	6-14
6.2 Releases Under Abnormal Conditions	6-15
6.2.1 Design-Basis Accidents	6-15
6.2.1.1 Methods for Identifying Design-Basis Accidents	6-15
6.2.1.2 Initial Set of Potential Design-Basis Accidents	6-16
6.2.2 Design of Mitigating Features	6-17
6.2.2.1 Introduction	6-17

TABLE OF CONTENTS
(continued)

	Page
6.2.2.2 Methods for Identifying Mitigating Features	6-17
6.2.2.3 Mitigating Features	6-19
6.2.3 Directory to Additional Data	6-20
6.3 Waste Retrieval	6-20
6.3.1 Expected Conditions	6-20
6.3.2 Retrieval Demonstrations	6-22
6.3.2.1 Proof-of-Principle Demonstrations	6-22
6.3.2.2 Development of Prototypes	6-23
6.3.3 Full Repository Retrieval	6-23
6.3.4 Directory to Additional Data	6-25
6.4 Waste Isolation	6-26
6.4.1 Opening Stability [10 CFR 60.133(e)]	6-28
6.4.1.1 Contribution of Opening Stability to Containment	6-28
6.4.1.2 Contribution of Opening Stability to Waste Isolation	6-29
6.4.1.3 Other Factors Affecting Opening Stability	6-30
6.4.2 Underground Layout	6-30
6.4.3 Rock Excavation [10 CFR 60.133(f)]	6-35
6.4.3.1 Emplacement Boreholes	6-36
6.4.3.2 Secondary Access and Emplacement Drifts	6-37
6.4.3.3 Primary Access Drifts	6-37
6.4.3.4 Shafts and Ramps	6-38
6.4.4 Thermal Loads [10 CFR 60.133(i)]	6-38
6.4.4.1 Areal Power Density	6-38
6.4.4.2 Waste Emplacement Configuration	6-40
6.4.5 Shaft and Borehole Seals (10 CFR 60.134)	6-41
6.4.6 Directory to Additional Data	6-42
6.5 Performance Confirmation	6-42
6.5.1 Program Plan	6-44
6.5.1.1 General Requirements	6-44

TABLE OF CONTENTS
(continued)

	Page
6.5.1.2 Phases of the Performance Confirmation Program	6-45
6.5.1.3 Preliminary Plans for Performance Confirmation	6-48
6.5.2 Development and Verification of Codes	6-51
6.5.3 Performance Confirmation Facilities	6-51
References for Chapter 6	6-53
7.0 Design Analysis	7-1
7.1 Preclosure Design Analysis	7-1
7.1.1 Approach to the Analysis	7-1
7.1.2 Surface Elements	7-3
7.1.2.1 Soils and Foundations	7-3
7.1.2.2 Probable Maximum Flood at the Men-and-Materials Shaft	7-4
7.1.2.3 Seismic Design	7-6
7.1.2.4 Wind and Tornado	7-6
7.1.2.5 Water Storage and Distribution	7-7
7.1.2.6 Preliminary Operations Analysis	7-7
7.1.2.7 Site-Generated Waste	7-8
7.1.2.8 Normal and Standby Electrical Power	7-8
7.1.2.9 Monitoring Systems	7-8
7.1.3 Underground Elements	7-9
7.1.3.1 Stability of Underground Openings	7-9
7.1.3.2 Design Analyses Based on Seismic and Weapons Test Loads	7-13
7.1.3.3 Control of Water in Drifts	7-16
7.1.3.4 Underground Ventilation	7-18
7.2 Postclosure Design Analysis	7-19
7.2.1 Approach to the Analysis	7-20
7.2.1.1 Coupling of Heat-Transfer and Mechanical Responses	7-20
7.2.1.2 Heat-Transfer Mechanisms	7-21
7.2.1.3 Continuum Mechanics	7-21
7.2.1.4 Computer Codes	7-22
7.2.1.5 Constitutive Relationships	7-22
7.2.2 Far-Field Effects	7-24

TABLE OF CONTENTS
(continued)

		Page
7.2.2.1	Conceptual Model for Thermal Analysis	7-24
7.2.2.2	Conceptual Model for Mechanical Analyses	7-24
7.2.2.3	Finite-Element Idealization	7-28
7.2.2.4	Studies Completed	7-28
7.2.3	Near-Field Effects	7-30
7.3	Engineering Analysis of Design	7-34
7.3.1	Site Characteristics Affecting Design	7-34
7.3.1.1	Effect of Site Characteristics on Location of Accesses	7-36
7.3.1.2	Effect of Site Characteristics on the Layout of the Underground Facility	7-37
7.3.2	The Effect of Construction Techniques	7-38
7.3.2.1	Approach to Selecting the Construction Methods for the Repository	7-38
7.3.2.2	Data Requirements	7-40
7.3.2.3	Results of Analysis	7-40
7.3.2.4	Future Work	7-41
7.3.3	The Effect of the Exploratory Shaft Facility	7-41
7.3.3.1	The Effects of the Exploratory Shaft Facility on the Repository Site	7-41
7.3.3.2	The Effects of the Exploratory Shaft Facility on the Full Repository	7-43
7.3.3.3	Layouts Considered for the Exploratory Shaft Facility	7-44
7.3.3.4	Functions of the Exploratory Shaft Facility During Operation of the Repository	7-44
7.3.3.5	Sealing the Exploratory Shafts	7-44
7.3.4	Effects of the Emplacement Configurations	7-44
7.3.4.1	Long-Term Waste Isolation Performance	7-45
7.3.4.2	Thermal and Mechanical Effects on the Repository	7-45
7.3.4.3	Safety of Operating Personnel and the General Public	7-46
7.3.4.4	Retrievability	7-47
7.3.4.5	Technical Feasibility and Cost	7-47
7.4	Systems, Structures, and Components Important to Safety and Waste Isolation	7-48

TABLE OF CONTENTS
(continued)

	Page
7.4.1 Systems, Structures, and Components Important to Safety	7-48
7.4.1.1 Introduction	7-48
7.4.1.2 Summary of Method for Determining Items Important to Safety	7-48
7.4.1.3 Method of Identifying Items Important to Safety	7-49
7.4.1.4 Preliminary PQ-List (Items Potentially Important to Safety)	7-61
7.4.2 Barriers Important to Waste Isolation	7-61
7.5 Analysis Conclusions	7-64
References for Chapter 7	7-67
8.0 Summary of Design Issues and Data Needs	8-1
8.1 Purpose and Organization	8-1
8.2 Postclosure	8-3
8.2.1 Issue 1.11: Configuration of Underground Facilities (Postclosure)	8-3
8.2.1.1 Introduction	8-4
8.2.1.2 Work Completed	8-11
8.2.1.3 Future Work	8-23
8.2.2 Issue 1.12: Seal Characteristics	8-24
8.2.2.1 Introduction	8-24
8.2.2.2 Work Completed	8-29
8.2.2.3 Future Work	8-35
8.3 Preclosure	8-36
8.3.1 Issue 2.1: Public Radiological Exposures--Normal Conditions	8-36
8.3.1.1 Introduction	8-36
8.3.1.2 Work Completed	8-37
8.3.1.3 Future Work	8-38
8.3.2 Issue 2.2: Work Radiological Safety--Normal Conditions	8-38
8.3.2.1 Introduction	8-38
8.3.2.2 Work Completed	8-39
8.3.2.3 Future Work	8-40

TABLE OF CONTENTS
(continued)

		Page
8.3.3	Issue 2.3: Accidental Radiological Releases	8-41
	8.3.3.1 Introduction	8-41
	8.3.3.2 Work Completed	8-42
	8.3.3.3 Future Work	8-50
8.3.4	Issue 2.7: Repository Design Criteria for Radiological Safety	8-51
	8.3.4.1 Introduction	8-51
	8.3.4.2 Work Completed	8-60
	8.3.4.3 Future Work	8-62
8.3.5	Issue 2.4: Waste Retrievability	8-62
	8.3.5.1 Introduction	8-62
	8.3.5.2 Work Completed	8-63
	8.3.5.3 Future Work	8-76
8.3.6	Issue 4.2: Nonradiological Health and Safety	8-78
	8.3.6.1 Introduction	8-78
	8.3.6.2 Work Completed	8-79
	8.3.6.3 Future Work	8-81
8.3.7	Issue 4.4: Preclosure Design and Technical Feasibility	8-81
	8.3.7.1 Introduction	8-81
	8.3.7.2 Work Completed	8-85
	8.3.7.3 Future Work	8-125
8.3.8	Issue 4.5: Repository System Cost Effectiveness	8-127
	8.3.8.1 Introduction	8-127
	8.3.8.2 Work Completed	8-130
	8.3.8.3 Future Work	8-133
8.4	Interface with Other Design Issues	8-134
8.4.1	Interfaces With the Waste Package	8-134
8.4.2	Interface With Future Environmental, Socioeconomic, and Transportation Issues	8-135
	8.4.2.1 General Information	8-135
	8.4.2.2 Environmental Releases	8-136
	8.4.2.3 Waste Management	8-136
	8.4.2.4 Resource Requirements	8-136
	8.4.2.5 Transportation	8-137

TABLE OF CONTENTS
(continued)

	Page
8.5 Future Issue Resolution Work	8-137
References for Chapter 8	8-139
9.0 Quality Assurance Program	9-1
9.1 General	9-1
9.2 Design Criteria and Guidelines	9-2
9.3 Design Control	9-2
9.4 Design Review	9-3
9.5 Records	9-3
References for Chapter 9	9-5
Glossary	G-1
List of Acronyms	LA-1
Distribution List	DL-1
VOLUME 3	
Appendix A Expected Temperatures for Borehole Walls and Drifts After Spent Fuel Emplacement	
Appendix B Preliminary Liner Stress Analyses	
Appendix C Ventilation and Cooling Analyses	
Appendix D Equipment for Surface Support and Waste Handling, Underground Development, and Waste Transportation, Emplacement and Retrieval	
Appendix E An Assessment of the Feasibility of Disposing of Nuclear Waste in a Horizontal Configuration	
Distribution List	DL-1
VOLUME 4	
Appendix F Preliminary Preclosure Radiation Safety Analysis	
Appendix G Equivalent Energy Density Concept	
Appendix H Surface Elements Design Analysis Studies	
Appendix I Effects of Porosity on Emplacement Drift Stability	

TABLE OF CONTENTS
(concluded)

		Page
Appendix J	Waste Retrieval	
Appendix K	Cove III Temperature Calculations	
Appendix L-1	Items Important to Safety at the Yucca Mountain Repository	
Appendix L-2	Items Important to Retrievability at the Yucca Mountain Repository	
Appendix M	Capacity of Yucca Mountain Compared to the Size of the Underground Facility	
Appendix N	Thermomechanical Analyses	
Appendix O	Recommended Geoengineering Properties and Parameters for Yucca Mountain Repository Design and Analysis	
Distribution List		DL-1
VOLUME 5		
Appendix P	Yucca Mountain Mined Geologic Disposal System Requirements and Subsystem Design Requirements to Support the Advanced Conceptual Design Studies for the Yucca Mountain Mined Geologic Disposal System	
Appendix Q	Data from the Reference Information Base (RIB) and Site Engineering Property Data Base (SEPDB) Used in Developing the Conceptual Design	
Appendix R	Study of Alternatives for Repository Layout, Underground Access, and Drift Design	
Distribution List		DL-1
VOLUME 6		
Drawing Portfolio		
Distribution List		DL-1

LIST OF TABLES

Table		Page
2-1	Waste Receipt Rates	2-5
2-2	Generalized Volcanic Stratigraphy for Yucca Mountain Showing Probable Source Calderas and Ages When Calderas Were Active	2-12
2-3	Summary of Physical and Engineering Properties of Surface Materials	2-24
2-4	Physical Properties of Intact Rock and the Rock Mass for Thermal/Mechanical Units at Yucca Mountain	2-27
2-5	Mechanical Properties for Thermal/Mechanical Units of Intact Rock at Yucca Mountain	2-29
2-6	Mechanical Properties and Modeling Parameters for Fractures in Thermal/Mechanical Units at Yucca Mountain	2-31
2-7	Mechanical Properties of the Rock Mass for Thermal/ Mechanical Units at Yucca Mountain	2-34
2-8	Recommended Values for Fracture Frequency in Thermal/ Mechanical Units at Yucca Mountain	2-42
2-9	Thermal Properties of Intact Rock and the Rock Mass	2-43
2-10	Mean Values and Ranges for Principal Stresses at Yucca Mountain	2-44
2-11	Temperature and Humidity Data for Yucca Mountain	2-46
2-12	Peak Ground Accelerations at the Surface	2-48
2-13	Tornado Characteristics	2-50
2-14	Design Spectrum of Missile Velocities	2-50
2-15	Department of Energy Directives Applicable to a Repository for High-Level Radioactive Waste	2-53
2-16	Functional Requirements of Repository Facilities	2-55
2-17	Functional Requirements for the Performance Confirmation and Closure Phases	2-58
2-18	Design Requirements for Natural Phenomena	2-59
2-19	Synopsis of the Department of Energy's Retrievability Requirements	2-62

LIST OF TABLES
(continued)

Table		Page
2-20	Radiation Exposure Concerns	2-70
2-21	Estimated Annual Releases of Naturally Occurring Radionuclides to the Atmosphere as the Result of Repository Construction	2-72
2-22	Factors Influencing Criticality	2-73
2-23	Major Parts of the Code of Federal Regulations Applicable to a Repository	2-75
2-24	Preliminary Summary of State Environmental Regulatory Requirements	2-79
2-25	Applicable State of California Regulations	2-80
3-1	Waste Acceptance Schedule	3-3
3-2	Waste Receipt Schedule for Spent Fuel Assemblies and Shipping Casks	3-5
3-3	Major Waste-Handling Equipment in Waste-Handling Building 1	3-29
3-4	Major Waste-Handling Equipment in Waste-Handling Building 2	3-31
3-5	Major Waste Treatment Equipment	3-35
3-6	Waste Emplacement Schedule	3-38
3-7	Equipment for Vertical Emplacement	3-45
3-8	Equipment for Horizontal Emplacement	3-51
3-9	Equipment for Removal of Waste from Vertical Boreholes Under Off-Normal Conditions	3-63
3-10	Equipment for Removal of Waste from Horizontal Boreholes Under Off-Normal Conditions	3-64
3-11	Major Elements of the Underground Facilities	3-69
3-12	Mining Methods for Drifts and Ramps	3-72
3-13	Ground Support Recommendations	3-84
3-14	Equipment Needed for Underground Development in the Vertical Emplacement Configuration	3-95

LIST OF TABLES
(continued)

Table		Page
3-15	Equipment Needed for Underground Development in the Horizontal Emplacement Configuration	3-96
3-16	Equipment List for Drilling Boreholes	3-97
3-17	Maximum Ventilation Requirements for the Development Area in the Vertical Emplacement Configuration	3-117
3-18	Maximum Ventilation Requirements for the Waste Emplacement Area in the Vertical Emplacement Configuration	3-119
3-19	Maximum Ventilation Requirements for the Development Area in the Horizontal Emplacement Configuration	3-120
3-20	Maximum Ventilation Requirements for the Waste Emplacement Area in the Horizontal Emplacement Configuration	3-125
3-21	Cooling Analysis for the Emplacement Drifts in the Horizontal Configuration	3-129
3-22	Airflow Requirements for the Vertical and Horizontal Emplacement Configurations	3-129
3-23	Constraints on Maximum Velocity	3-130
3-24	Comparison of Airflows and Fan Pressures	3-131
3-25	Pressure Differentials Across the Double Doors and Bulkheads Separating the Two Ventilation Systems for the Ventilation Models Analyzed	3-132
3-26	Comparison of the Ventilation Needed to Cool a Drift 50 Yr After Waste Emplacement for the Vertical and Horizontal Waste Emplacement Configurations	3-133
4-1	Descriptions of Buildings in the Waste Operations Area	4-31
4-2	Descriptions of Buildings in the Support Area	4-32
4-3	Heating, Ventilating, and Air-Conditioning Pressure Zones	4-45
4-4	Properties of Excavated Tuff Used for Design	4-73
4-5	Data for Ramps and Shafts	4-81
4-6	Items Potentially Important to Safety for the Yucca Mountain Repository	4-158

LIST OF TABLES
(continued)

Table		Page
5-1	Summary of Construction Parameters for Shafts and Ramps	5-13
6-1	Summary of Liquid Wastes Generated on the Surface	6-4
6-2	Estimated Quantities of Solid Wastes Generated in the Surface Facilities	6-7
6-3	Summary of Potential Accidents Being Considered as Future Design-Basis Accidents	6-17
6-4	Directory of Discussions Related to Radioactive Releases Under Abnormal Conditions	6-21
6-5	Directory of Discussions Related to Retrieval	6-25
6-6	Extraction Ratios Used in the Conceptual Design	6-34
6-7	Directory of Discussions Related to Waste Isolation	6-43
6-8	Relationship of Phases of the Performance Confirmation Program to Stages of the Licensing Process	6-46
7-1	Peak Discharges of the Probable Maximum Flood	7-5
7-2	Waste Types Categorized According to Level of Resistance to Dispersion	7-52
7-3	The Nine System Areas in Area I	7-53
7-4	Scenarios Associated with Waste Emplacement Operations that Might Lead to Radioactive Releases	7-54
7-5	Internal Initiating Events Chosen for Further Event Tree Development and Quantification	7-56
7-6	Screening Criteria for External Events	7-57
7-7	Items Potentially Important to Safety	7-62
8-1	Codes Used to Support Work Completed for Information Need 1.11.6 of Issue 1.11	8-6
8-2	Codes Used for Analyses Addressing Issue 1.12	8-27
8-3	Codes Used for Analyses Addressing Issue 2.3	8-43
8-4	Potential Q-List for Items Important to Safety at the Yucca Mountain Repository	8-50

LIST OF TABLES
(concluded)

Table		Page
8-5	Design Criteria for the Geologic Repository Operations	8-52
8-6	Computer Codes Used in Analyses for Issue 4.4	8-86
8-7	Predicted Stress, Factor of Safety, and Temperatures of Panel Access Drifts at Different Locations at 50 yr After Emplacement	8-107
8-8	Maximum Ventilation Airflow Requirements for Two Ventilation Scenarios	8-121
8-9	Cooling Requirements for Vertical and Horizontal Emplacement Using Ambient and Conditioned Air	8-122
8-10	Repository Life Cycle Cost (RLCC) 1986 Constant Estimate Analysis	8-128

LIST OF FIGURES

Figure		Page
ES-1	Location of the Yucca Mountain Site in Southern Nevada	viii
ES-2	Simplified Representation of How Design Requirements Evolve from Laws and Regulations	x
ES-3	Tuff Repository Perspective Sketch	xii
ES-4	Schedule for Repository at Yucca Mountain	xiv
2-1	Canister for Defense High-Level Waste and West Valley High-Level Waste	2-4
2-2	Spent Fuel Container	2-6
2-3	Physiographic Features of Yucca Mountain and Surrounding Regions	2-8
2-4	Topographic Expression of Physiographic Features and Flood Zones in the Area of the Surface Facilities	2-10
2-5	Structural Features at Yucca Mountain	2-16
2-6	Thermal/Mechanical Stratigraphy at Yucca Mountain	2-18
2-7	Schematic Development of the Three-Dimensional Model	2-19
2-8	Dual Classification of Tertiary Volcanic Rocks of Yucca Mountain	2-21
2-9	Primary Area Boundary Layout Fracture Orientations	2-39
2-10	Retrieval Time Frame for Design Purposes	2-61
2-11	Classification of Retrieval Conditions Based on Probability	2-64
3-1	Schedule of Repository Construction and Operation	3-2
3-2	Waste-Handling Building 1, Stage 1 Operations, Material Block Flow Diagram	3-7
3-3	Waste-Handling Building 1, Stage 2 Operations, Material Block Flow Diagram	3-9
3-4	Waste-Handling Building 2, Stage 2 Operations, Material Block Flow Diagram	3-11
3-5	Waste-Handling Operations, Mechanical Flow Diagram, Waste-Handling Building 1	3-13
3-6	Waste-Handling Operations, Mechanical Flow Diagram, Waste-Handling Building 2, Sheet 1 of 4	3-15

LIST OF FIGURES
(continued)

Figure		Page
3-7	Waste-Handling Operations, Mechanical Flow Diagram, Waste-Handling Building 2, Sheet 2 of 4	3-17
3-8	Waste-Handling Operations, Mechanical Flow Diagram, Waste-Handling Building 2, Sheet 3 of 4	3-19
3-9	Waste-Handling Operations, Mechanical Flow Diagram, Waste-Handling Building 2, Sheet 4 of 4	3-21
3-10	Waste Treatment Building, Liquid Radioactive Waste Flow Diagram	3-25
3-11	Waste Treatment Building, Solid Radioactive Waste Flow Diagram	3-27
3-12	Conceptual Design of Vertical Borehole	3-39
3-13	Conceptual Design of Horizontal Borehole	3-40
3-14	Conceptual Flow Diagram, Spent Fuel and Defense High-Level Waste, Vertical Emplacement	3-41
3-15	Block Flow Diagram, Spent Fuel and Defense High-Level Waste, Vertical Emplacement	3-43
3-16	Conceptual Flow Diagram, Spent Fuel and Defense High-Level Waste, Horizontal Emplacement	3-47
3-17	Block Flow Diagram, Spent Fuel and Defense High-Level Waste, Horizontal Emplacement	3-49
3-18	Block Flow Diagram, Waste Container Retrieval, Vertical Emplacement	3-55
3-19	Block Flow Diagram, Spent Fuel and Defense High-Level Waste Retrieval, Horizontal Emplacement	3-59
3-20	Underground Facility Layout, Commingled Waste, Vertical Emplacement	3-67
3-21	Block Flow Diagram, Tunnel-Boring Machine Cycle	3-73
3-22	Isometric Diagram, Mining Methods and Sequence, Vertical Emplacement	3-75
3-23	Block Flow Diagram, Conventional Mining Cycle	3-77
3-24	Material Flow Diagram, Tuff Handling	3-81
3-25	Ground Support Cross Sections	3-85

LIST OF FIGURES
(continued)

Figure		Page
3-26	Typical Development Sequence, Vertical Emplacement	3-89
3-27	Isometric Diagram, Mining Methods, Horizontal Emplacement	3-93
3-28	Block Flow Diagram, Vertical Case, Emplacement Boreholes	3-99
3-29	Block Flow Diagram, Horizontal Case, Emplacement Boreholes	3-103
3-30	Emplacement Area Exhaust Building, Overall General Arrangement, Plan and Sections	3-109
3-31	Maximum Ventilation Requirements for Development Operations, Vertical Emplacement	3-113
3-32	Maximum Ventilation Requirements for Emplacement Operations, Vertical Emplacement	3-115
3-33	Maximum Ventilation Requirements for Development Operations, Horizontal Emplacement	3-123
3-34	Maximum Ventilation Requirements for Emplacement Operations, Horizontal Emplacement	3-127
4-1	Location and Access Plan	4-2
4-2	Site Access Plan, Sheet 1 of 2	4-5
4-3	Site Access Plan, Sheet 2 of 2	4-7
4-4	Railroad/Highway Bridge, Plan, Profile, Sections, and Details	4-11
4-5	Overall Site Plan	4-15
4-6	Location of the Underground Facility	4-17
4-7	Locations of the Six Candidate Areas for the Surface Facilities	4-19
4-8	Central Surface Facilities, Plot Plan	4-21
4-9	Flood Diversion Structures	4-24
4-10	Men-and-Materials Shaft, Plot Plan	4-25
4-11	Emplacement Area Exhaust Shaft, Plot Plan	4-29

LIST OF FIGURES
(continued)

Figure		Page
4-12	Waste-Handling Building 1, Preliminary General Arrangement, Plan--Elevation Grade	4-35
4-13	Waste-Handling Building 2, Preliminary General Arrangement, Plan--Elevation Grade	4-39
4-14	Waste-Handling Building 2, Preliminary General Arrangement, Sections	4-41
4-15	Heating, Ventilating, and Air-Conditioning Pressure Zones in Waste-Handling Building 1	4-46
4-16	Heating, Ventilating, and Air-Conditioning Pressure Zones in Waste-Handling Building 2	4-47
4-17	Waste-Handling Building 2, Cask-Unloading and Waste-Packaging Hot Cells, Heating, Ventilating, and Air-Conditioning Flow Diagram	4-49
4-18	Waste-Handling Building 2, Consolidation Hot Cell, Heating, Ventilating, and Air-Conditioning Flow Diagram	4-51
4-19	Waste-Handling Building 2, Surface Storage Vault, Heating, Ventilating, and Air-Conditioning Flow Diagram	4-53
4-20	Waste Treatment Building, General Arrangement, Plan	4-57
4-21	Waste Treatment Building, General Arrangement, Sections	4-59
4-22	Performance Confirmation Building, General Arrangement, Plan and Sections	4-63
4-23	Performance Confirmation Building, Hot Cell Arrangement, Plan and Sections	4-65
4-24	Development Area Ventilation Building, General Arrangement, Plan and Section Elevation	4-71
4-25	General Arrangement, Waste Ramp and Portal, Vertical	4-79
4-26	General Arrangement, Tuff Ramp and Portal, Vertical	4-83
4-27	General Arrangement, Shaft Elevations and Cross Sections	4-87
4-28	General Arrangement, Men-and-Materials Shaft, Cross Section	4-89

LIST OF FIGURES
(continued)

Figure		Page
4-29	General Arrangement, Men-and-Materials Shaft Hoist and Headframe	4-93
4-30	General Underground Facility Layout, Commingled Waste, Horizontal Emplacement	4-97
4-31	Drift and Ramp Cross Sections, Vertical Emplacement	4-99
4-32	Drift and Ramp Cross Sections, Horizontal Emplacement	4-101
4-33	General Underground Facility Layout, Drainage Configuration, Vertical Emplacement	4-103
4-34	Exploratory Shaft Facility and Support Facilities, Vertical Emplacement	4-107
4-35	Underground Facility Layout, Development Area Shops and Warehousing, Vertical Emplacement	4-111
4-36	Emplacement Area Shop, Warehousing, and Decontamination, Vertical Emplacement	4-113
4-37	Panel Layout, Commingled Waste, Vertical Emplacement	4-115
4-38	Panel Layout, Commingled Waste, Horizontal Emplacement	4-117
4-39	Underground Facility Layout, Panel Details for Commingled Waste, Vertical Emplacement	4-121
4-40	Side View of a Standoff in a Vertical Emplacement Drift in Which Waste Is Commingled	4-124
4-41	Underground Facility Layout, Panel Details for Commingled Waste, Horizontal Emplacement	4-127
4-42	Typical Ropebelt Conveyor	4-131
4-43	Preparation of Vertical Borehole for Emplacement	4-141
4-44	Emplacement of a Waste Container in the Vertical Configuration	4-142
4-45	Borehole Closure Operations in the Vertical Configuration	4-143
4-46	Waste Transporter in the Transport Mode in the Vertical Configuration	4-144
4-47	Waste Transporter in the Emplacement Mode in the Vertical Configuration	4-145

LIST OF FIGURES
(continued)

Figure		Page
4-48	Preparation of a Horizontal Borehole for Emplacement	4-146
4-49	Emplacement of a Waste Container in the Horizontal Configuration	4-147
4-50	Borehole Closure Operations in the Horizontal Configuration	4-149
4-51	Waste Transporter in the Transport Mode in the Horizontal Configuration	4-150
4-52	Waste Transporter in the Emplacement Mode in the Horizontal Configuration	4-151
4-53	Preparation of the Vertical Borehole for Waste Removal	4-152
4-54	Removal of Waste for Performance Confirmation in the Vertcal Configuration	4-153
4-55	Preparation of the Horizontal Borehole for Waste Removal	4-154
4-56	Baseline Concept for Removal of Waste for Performance Confirmation in the Horizontal Configuration	4-156
5-1	Backfill Emplacement Methods	5-4
5-2	Concept for Using Sumps and Drains to Impound and Drain Water Inflow	5-6
5-3	Single Dam	5-7
5-4	Concepts for Drift Bulkheads Used to Isolate Major Inflows	5-9
5-5	Alternative Concepts for Sealing Permeable Zones in Water-Producing Emplacement Boreholes	5-11
5-6	General Arrangement for Shaft Seals	5-14
5-7	Conceptual Design for Shaft Surface Barrier	5-16
5-8	Conceptual Design for Settlement Plug in Shaft	5-19
5-9	Conceptual Design for Station Plug	5-20
5-10	General Arrangement for Ramp Seals	5-21
5-11	Conceptual Design for Surface Barrier for Ramps	5-23

LIST OF FIGURES
(continued)

Figure		Page
5-12	Location of Exploratory Boreholes	5-24
5-13	Concept for Sealing Boreholes	5-25
6-1	Relationship of This Report to the Issues Resolution Strategy	6-2
6-2	Summary of Reference Waste Treatment Process	6-9
6-3	Illustration of Design Analysis Process Used to Determine Engineered Safety Features	6-18
6-4	Relationship Among Design- and Performance-Related Issues Used Directly in Performance Allocation	6-27
6-5	Relationship of Primary Area to Faulting at Yucca Mountain	6-32
7-1	Conceptual Model for Far-Field Calculations at Yucca Mountain	7-25
7-2	Finite Mesh in Far-Field Thermal/Mechanical Calculations	7-26
7-3	Maximum Far-Field Temperatures for a Repository for Spent Fuel with an Areal Power Density of 57 kW/acre	7-31
7-4	Cross Section of Yucca Mountain Showing Position of Slab	7-35
7-5	Exploratory Shaft Facility Concept	7-42
7-6	Q-List Methods for Determining Items Important to Safety	7-50
8-1	Nevada Nuclear Waste Storage Investigations (NNWSI) Project Issues Hierarchy	8-2
8-2	Primary Area (Area 1) for the Underground Repository and Potential Expansion Areas (Areas 2 Through 6)	8-16
8-3	Revised Usable Portion of the Primary Area and the Expansion Areas	8-17
8-4	Q-List Methodology for Items Important to Safety	8-47
8-5	Strategy to be Used for Retrieval Evaluation	8-64
8-6	Classification of Retrieval Conditions on the Basis of Probability	8-66
8-7	Methodology Used to Determine Items Important to Retrievability	8-70

LIST OF FIGURES
(concluded)

Figure		Page
8-8	Finite-Element Predictions of the Principal Stresses in the Vicinity of the Vertical Emplacement Drift	8-98
8-9	Finite-Element Predictions of the Principal Stresses in the Vicinity of the Horizontal Emplacement Drift	8-99
8-10	Finite-Element Predictions of the Ratio Between Matrix Strength and Stress Around the Vertical Emplacement Drift	8-100
8-11	Finite-Element Predictions of the Ratio Between Matrix Strength and Stress Around the Horizontal Emplacement Drift	8-101
8-12	Repository Cross Section Showing Access Drift Locations Considered	8-102
8-13	Induced Stress Profile on Repository Horizon 50 yr After Waste Emplacement	8-103
8-14	Compressive Axial Strain (%) at Axial Stress 100 MPa	8-115
8-15	Measured Versus Calculated Response for Thermally Cracked Granite	8-117
8-16	Comparison of Measured and Calculated Temperature Profiles for Borehole in Tuff Subjected to Thermal Cycling	8-118

1.0 INTRODUCTION

The Department of Energy (DOE) has determined that the preferred method for the disposal of radioactive wastes from nuclear power plants is to emplace them in mined geologic repositories. The Nevada Nuclear Waste Storage Investigations (NNWSI) Project is conducting detailed studies of the Yucca Mountain area on and near the Nevada Test Site (NTS) in southern Nevada to determine the feasibility of constructing a repository at that location.

This Site Characterization Plan Conceptual Design Report (SCP-CDR) supports the site characterization activity required by 10 CFR 60 (NRC, 1986b) by developing a conceptual design for the repository in sufficient detail to allow assessment of the site characterization program. Chapter 6 of the Site Characterization Plan (SCP) (DOE, in preparation) summarizes the detailed information contained in this SCP-CDR. Chapter 6 of the SCP is the document that satisfies the requirements of the Nuclear Waste Policy Act (NWPA) of 1982.

The DOE has decided that the design of the systems, components, excavations, structures, and barriers necessary to establish and demonstrate compliance with the performance objectives of 10 CFR 60 should be substantially completed at the time the license application is submitted to the Nuclear Regulatory Commission (NRC). To this end, the DOE has divided the design of the repository into four phases (DOE, 1985). The first phase consists of the site characterization plan conceptual design (SCP-CD, the subject of this report), which will concentrate on those features of the repository design that require site characterization data. These features include the surface structures and the underground layout and will provide a basis for data-gathering plans described in the SCP. The second phase is the advanced conceptual design (ACD), which will be used to explore design alternatives and will firmly fix and refine the design criteria and concepts to be made final in later design efforts. The third phase is the license application design (LAD), which will complete the resolution of design and licensing issues identified and assessed in earlier design phases and will develop the design of the items necessary to demonstrate compliance with the design requirements and performance objectives of 10 CFR 60. The fourth phase is the final procurement and construction design (FPCD), which will develop the final (working) drawings and specifications for procurement and construction.

1.1 NNWSI Project History and Past Design Efforts

The NWPA assigns responsibility to the DOE for the siting, design, construction, and operation of geologic repositories for disposal of spent nuclear fuel and other high-level waste. The design and supporting studies for a repository in tuff are being directed by DOE's Nevada Operations Office, which manages the NNWSI Project.

Three different geologic media for the first repository--tuff, salt, and basalt--are candidates for the disposal of these wastes, and a project has been organized to investigate each medium. Sandia National Laboratories (SNL) is responsible for developing the conceptual design for the prospective repository in tuff.

A unit in the Topopah Spring Member of the Paintbrush Tuff beneath Yucca Mountain in the southwest corner of the NTS and adjacent federal property is currently being investigated as a prospective site for waste emplacement. Should it be determined that the physical characteristics of this site are satisfactory and that the site and repository design meet statutory and regulatory requirements, then this site may be selected for construction of a repository to dispose of spent fuel, West Valley high-level waste (WVHLW), and defense high-level waste (DHLW).

The early concepts for the repository at Yucca Mountain were developed by SNL. These concepts were schematic and contained only sufficient detail to formulate concepts, verify feasibility, and provide criteria for the architect/engineer (A/E) firms that would be selected to develop a more detailed design.

The NWPA requires the DOE to begin accepting waste on January 31, 1998. In its Mission Plan (DOE, 1985), the DOE addressed the possibility that construction or institutional delays could prevent meeting the 1998 deadline; therefore, the DOE requested engineering studies to evaluate constructing the repository in two stages.

As described in the two-stage repository report for the tuff project (SNL, 1985), the construction of two waste-handling buildings begins at the same time. The first waste-handling building (WHB-1) is designed to handle spent fuel in the equivalent of 400 metric tons of uranium per year (MTU/yr). The second waste-handling building (WHB-2) has a design capacity of 3,000 MTU/yr. The design for WHB-2 includes equipment for fuel consolidation. The design of the subsurface facilities is not significantly affected by staged development of the surface facilities.

In this report, the conceptual design is based on the two-stage approach to repository construction and includes the capability of consolidating spent fuel. The decisions as to whether consolidation and the two-stage approach to construction will be necessary will be influenced by studies made during the ACD. The decision will be made by the DOE.

1.2 Purpose of the Conceptual Design

The conceptual design phase began with the preparation of a conceptual design to support the SCP and will continue through ACD. The conceptual design phase focuses on the designs of structures, components, and emplacement layouts and equipment that may be affected by site characterization data. Information is provided by the SCP-CD to ensure that adequate plans for gathering data to support the ACD and LAD are included in the SCP. Existing site-specific data are incorporated to assist in the identification of additional data needs, and sufficient design detail is developed to ensure that site data needs are identified. A preliminary cost estimate has been prepared (Gruer et al., 1987) from the information provided by the SCP conceptual design.

The design process is an ongoing one that requires periodic documentation of the status of the design. For example, the status of the Yucca Mountain mined geologic disposal system design studies has been reported previously in the Environmental Assessment (EA) for the Yucca Mountain

site (DOE, 1986b). The current design, as documented in this report, reflects both maturing design concepts and more recent guidance. Specifically, the current design reflects the use of the Mission Plan (DOE, 1985) and the Generic Requirements for a Mined Geologic Disposal System (DOE, 1984b; DOE, 1986c, Appendix D).

To document this design in a timely manner, it was necessary to stop making design changes in mid-1986. It is recognized that since that time several changes in guidance and in the respondent design concepts have occurred and additional design studies have been initiated (or completed). These changes will be reflected in future designs for the Yucca Mountain repository. Some of the changes and studies that may affect the design are briefly mentioned below.

Changes in future designs will be expected to occur as a result of more recent guidance presented in the Draft Mission Plan Amendment (DOE, 1987) and in the revised Generic Requirements document (DOE, 1986c). The principal impact of these changes is likely to be on the schedule for waste acceptance, the evaluation of the feasibility of using shorter horizontal boreholes, and variations in the second exploratory shaft.

The design has evolved from the design presented in the EA (DOE, 1986b). That design is based on a repository constructed in two stages with a capacity of 70,000 MTU of spent fuel, two-thirds of which comes from pressurized-water reactors (PWR), and one-third from boiling-water reactors (BWR). Since the preparation of the EA, additional analyses by project personnel and guidance from DOE have resulted in design changes, which are reflected in the design described in this report. This design differs from that described in the EA in the following significant ways: (1) projected waste receipts are 62,000 MTU of spent fuel, of which 60% comes from PWRs and 40% from BWRs, and 8,000 MTU DHLW and West Valley high-level waste; (2) spent fuel and high-level waste will be commingled in selected emplacement panels; (3) the underground facilities have been revised by minor changes in layout and changes in drift dimensions to reflect more detailed ventilation (airflow) calculations and additional information on equipment design; (4) WHB-1 will remain in operation to receive high-level waste; (5) site-generated waste will be packaged and shipped to a waste disposal area offsite; (6) decommissioning will consist of removing all structures to below grade level and restoring the site to near its original condition; (7) new estimates of cost and staffing levels have been prepared for this report; and (8) the level of the underground test facility has been tentatively chosen as 1,020 ft below the surface (roughly the center of the nonlithophysal portion of the Topopah Spring unit). This design may change further as additional site information is obtained and as additional engineering work is completed.

The exploratory shafts have also been the subject of continuing design studies. These studies address concerns that were identified during public and NRC reviews of the EA, as well as more recent reviews. The most significant items include the location of the shafts and related surface facilities, diameter and construction methods used for the second exploratory shaft, investigation of structural features by drifting, and the rearrangement of the underground facility associated with the shafts. A discussion of these design studies and their status is summarized in SCP Section 8.4 and will be fully reflected in future designs.

1.3 Regulatory Background

Development of the engineering concepts for the conceptual design of the repository is consistent with the applicable laws, regulations, and DOE Orders listed below:

- Nuclear Waste Policy Act of 1982;
- 10 CFR 20, "Standards for Protection Against Radiation" (NRC, 1986a);
- 10 CFR 60, "Disposal of High-Level Radioactive Wastes in Geologic Repositories" (NRC, 1986b);
- 10 CFR 960, "General Guidelines for the Recommendation of Sites for Nuclear Waste Repositories" (DOE, 1986a);
- 40 CFR 191, "Environmental Radiation Protection Standards for Management and Disposal of Spent Nuclear Fuel, High-Level and Transuranic Radioactive Wastes" (EPA, 1986);
- DOE Order 5480.1B, "Environment, Safety, and Health Program for Department of Energy Operations" (DOE, 1986d);
- DOE Order 5480.4, "Environmental Protection, Safety, and Health Protection Standards" (DOE, 1984a);
- DOE Order 6410.1, "Management of Construction Projects" (DOE, 1983a); and
- DOE Order 6430.1, "General Design Criteria" (DOE, 1983b).

Other federal, state, and local laws and regulations appropriate to the design have been considered and incorporated when these laws and regulations are more restrictive. However, in cases where such codes contain provisions contrary to the safety requirements for a repository [such as the California Administrative Code, Mine Safety Orders (1981) requirement for underground airflow reversal], the provisions have been excluded and the rationale for exclusion has been given. The U.S. Department of Energy/Office of Civilian Radioactive Waste Management Office of Geologic Repositories (USDOE/OCRWM-OGR) will obtain the variances necessary based on recommendations from the NNWSI Project Office, the U.S. Department of Energy/Nevada Waste Management Project Office (USDOE/NV-WMPO).

1.4 Scope of the Design

The conceptual design for a repository in tuff presented in this document was developed during the period that started in February 1984 and continued through September 1986. The conceptual design effort is divided into five areas: surface facilities; subsurface facilities; special waste emplacement and retrieval equipment; the waste package; and the waste emplacement envelope, which includes the emplacement borehole and the hardware that must be installed in the borehole to facilitate emplacement of the waste package. Bechtel National, Inc., designed the

surface facilities, and Parsons Brinckerhoff Quade & Douglas designed the subsurface portion of the repository. The waste package design is the responsibility of Lawrence Livermore National Laboratory. The emplacement and retrieval equipment, including that planned for off-normal conditions, and the waste emplacement envelope were designed by SNL.

The reference emplacement orientation is vertical emplacement with a single waste container in a vertical borehole. The alternate orientation is horizontal emplacement with as many as 18 waste containers in a horizontal borehole. A study is currently being conducted that will assess the feasibility of variations in the horizontal emplacement concept. This study will compare a short horizontal borehole option, in which one to three containers would be placed in a borehole, with the present long, horizontal borehole concept. Items for comparison include reliability, retrievability, thermomechanical effects, cost, licensability, and other relevant factors.

Many of the assumptions for the current design are based on existing preliminary data. These preliminary data and the design concepts presented in this SCP-CDR reflect the level of detail necessary to determine the additional site information needed for future design activities. Therefore, because the current design was developed to support site characterization, this report does not reflect the engineering detail that will be developed during the ACD or LAD. For example, structural design of the waste-handling buildings, to be done during ACD, will require site information such as soil properties, fault locations, and earthquake history that must be further characterized.

1.5 Organization of the Report

This report is organized in nine chapters. The first chapter provides an introduction and background information. The design bases are discussed in Chapter 2. Operations at the repository are discussed in Chapter 3. Chapter 4 presents the current conceptual design of the repository, and Chapter 5 describes the plans for closing and decommissioning the repository.

Chapter 6 presents the performance objectives for the repository, along with the design features that ensure that the repository will meet regulatory requirements for preclosure releases. Chapter 7 discusses analyses conducted in developing the design. Chapter 8 identifies design issues and data needs, and Chapter 9 presents the quality assurance plan applied to the conceptual design. A glossary and a list of acronyms follow Chapter 9. Appendices A through R and the drawing portfolio provide supporting information not included in the body of the report.

The issues resolution strategy (IRS) is used to direct the design and demonstrate the suitability of the prospective repository. The application of this strategy to the Yucca Mountain site is described in detail in Chapter 8 of the SCP (DOE, 1987b). Within this strategy, a set of key issues (DOE, 1985) and related issues are defined to ensure that the repository design, construction, operation, and closure conform to established regulatory performance objectives described in Sections 2.4 and 2.6 of this report. Each issue, phrased as a question, defines a set of

information needs that will, when the information is provided, answer the question asked by that issue. Each set of issues, in turn, responds to the information required by the corresponding key issue. Satisfactory resolution of all key issues will provide the information required for a license application to the NRC. Chapter 8 of the SCP describes a site characterization program that will provide the site data needed to support issue resolution.

The development of the conceptual design for a prospective repository at Yucca Mountain, as described in this document, was done as part of the IRS. This report describes design information that provides input to the definition of site characterization plans as presented in the SCP. Further amplification of the relationship of this report to the IRS will be presented in subsequent chapters.

For the sake of readability in this report, the indicative mood is used to tell what will be done if a repository is built at Yucca Mountain. Although the indicative mood indicates that an action is being or will definitely be taken, the reader should not conclude from this usage that a decision has been made to construct the first repository at Yucca Mountain.

The units of measurement used in this document are expressed in both English and metric units, depending on which unit is commonly used in the field being discussed. For example, English units are used in the sections pertaining to engineering, and metric units are used in discussions of thermomechanical characteristics. When information is derived from some other published report, the units are consistent with those used in that report.

REFERENCES FOR CHAPTER 1

California Administrative Code, Title 8, "Industrial Relations," Part I, "Department of Industrial Relations," Chapter 4, "Division of Industrial Safety," Subchapter 17, "Mine Safety Orders," July 1981.

DOE (U.S. Department of Energy), "Management of Construction Projects," Order 6410.1, Washington, D.C., May 1983a.

DOE (U.S. Department of Energy), "General Design Criteria," Order 6430.1, Washington, D.C., December 1983b.

DOE (U.S. Department of Energy), "Environmental Protection, Safety, and Health Protection Standards," Order 5480.4, Washington, D.C., May 1984a.

DOE (U.S. Department of Energy), "Generic Requirements for a Mined Geologic Disposal System," DOE/NE/44301-1, Office of Civilian Radioactive Waste Management, Washington, D.C., September 1984b.

DOE (U.S. Department of Energy), "Mission Plan for the Civilian Radioactive Waste Management Program," DOE/RW-0005, Office of Civilian Radioactive Waste Management, Washington, D.C., June 1985.

DOE (U.S. Department of Energy), "General Guidelines for the Recommendation of Sites for Nuclear Waste Repositories," Code of Federal Regulations, Energy, Title 10, Part 960, Washington, D.C., January 1986a.

DOE (U.S. Department of Energy), "Environmental Assessment, Yucca Mountain Site, Nevada Research and Development Area, Nevada," DOE/RW-0073, Office of Civilian Radioactive Waste Management, Washington, D.C., May 1986b.

DOE (U.S. Department of Energy), "Generic Requirements for a Mined Geologic Disposal System," Appendix D, "Department of Energy Position on Retrievability and Retrieval for a Geologic Repository," (OGR/B-2), DOE/RW-0090, Office of Civilian Radioactive Waste Management, Washington, D.C., June 1986c.

DOE (U.S. Department of Energy), "Environment, Safety, and Health Program for Department of Energy Operations," Order 5480.1B, Washington, D.C., September 1986d.

DOE (U.S. Department of Energy), "Draft Mission Plan Amendment," DOE/RW-0128, Office of Civilian Radioactive Waste Management, Washington, D.C., January 1987.

DOE (U.S. Department of Energy), "Site Characterization Plan, Yucca Mountain Site, Nevada Research and Development Area, Nevada," Office of Civilian Radioactive Waste Management, Washington, D.C., in preparation.

EPA (U.S. Environmental Protection Agency), "Environmental Radiation Protection Standards for Management and Disposal of Spent Nuclear Fuel, High-Level and Transuranic Radioactive Wastes," Code of Federal Regulations, Protection of Environment, Title 40, Part 191, Washington, D.C., July 1986.

REFERENCES FOR CHAPTER 1
(concluded)

Gruer, E. R., M. E. Fowler, and G. A. Rocha, "Cost Estimate of the Yucca Mountain Repository Based on the Site Characterization Plan Conceptual Design," SAND85-1964, Sandia National Laboratories, Albuquerque, NM, June 1987.

NRC (U.S. Nuclear Regulatory Commission), "Standards for Protection Against Radiation," Code of Federal Regulations, Energy, Title 10, Part 20, Washington, D.C., January 1986a.

NRC (U.S. Nuclear Regulatory Commission), "Disposal of High-Level Radioactive Wastes in Geologic Repositories," Code of Federal Regulations, Energy, Title 10, Part 60, Washington, D.C., January 1986b.

NWPA (Nuclear Waste Policy Act of 1982), Public Law 97-425, 96 Stat 2201 42 USC 10101, Washington, D.C., January 1983.

SNL (Sandia National Laboratories), "Two-Stage Repository Development at Yucca Mountain: An Engineering Feasibility Study," SAND84-1351 Rev. 1, compiled by H. R. MacDougall, Sandia National Laboratories, Albuquerque, NM, December 1985.

2.0 BASES FOR THE SCP CONCEPTUAL DESIGN

The basic functions of the repository at Yucca Mountain are to receive, process, and permanently dispose of high-level radioactive waste (including spent fuel) resulting from the irradiation of 70,000 metric tons of uranium (MTU) fuel initially loaded in civilian and U.S. government reactor cores. The repository must be able to isolate these wastes in accordance with Environmental Protection Agency (EPA) standards (Section 2.4).

The basis for the site characterization plan (SCP) conceptual design of the repository is formed by the characteristics of the waste and its package, the characteristics of the site in which the waste is emplaced, and the functions that the repository must perform.

The radioactive-waste design basis includes the types, quantities, receipt rates, and characteristics of the waste (Section 2.1). The types, quantities, and receipt rates are specified by the Nuclear Waste Policy Act (NWPA) of 1982, the Department of Energy (DOE) Mission Plan (DOE, 1985a), and the Generic Requirements (GR) document (DOE, 1984b). [A revised GR document (DOE, 1986c) was distributed after the design represented in this report was produced.] Waste characteristics are determined by analyses and measurements that include waste history, treatment or processing, and packaging.

The current site design basis is derived from the collection and interpretation of physical data gathered during preliminary characterization of the site. Based on these data, the Topopah Spring Member of the Paintbrush Tuff Formation at Yucca Mountain has been selected as the target waste emplacement horizon. These data have been consolidated in the Reference Information Base (RIB) presented in Appendix Q, which contains reference design parameter values related to site properties. The values in the RIB are those used as a basis for the SCP conceptual design, and the RIB provides a control for the distribution of data. The portion of the RIB presented in Appendix Q does not contain a description of the repository design as presented in Chapters 3, 4, and 5. That design information will be incorporated in subsequent revisions of the RIB.

The functions that the repository must perform have been documented in the form of design criteria. Design criteria (site-specific subsystem design requirements) are requirements placed on specific repository systems, structures, and components. The requirements are derived from policy and regulations issued by various government agencies to implement the NWPA. These requirements (Section 2.4.1) flow from the regulatory source documents through the GR (DOE, 1984b) to the two draft site-specific requirements documents (Appendix P). The System Requirements document (SR) contains a detailed identification of site selection, licensing, and programmatic functional requirements to be met by a mined geologic disposal system (MGDS) at Yucca Mountain. The second document is the Nevada Nuclear Waste Storage Investigations (NNWSI) Subsystems Design Requirements (SDR) document, which identifies federal, state, and local requirements that must be met in addition to the system requirements and lists industry codes and standards to be used. The SDR also provides

detailed guidance to architect/engineers for the design of the physical subsystems, i.e., the facilities and equipment, that will work together to meet the requirements identified in the SR and the SDR. The design criteria will evolve and become more specific as the design process moves into its later phases. The SR and SDR that were used for this design are presented in Appendix P. Both documents will be updated for future design phases, and the SDR will be renamed "Repository Design Requirements" and its scope will be limited to the repository design. A companion Waste Package Design Requirements document will also be developed.

This chapter summarizes the reference design values, functions, requirements, and criteria used in the development of the conceptual design for the SCP. These summary values were taken from the various documents cited as references. The documents cited as information sources provide much greater detail and should be examined if additional information is required. The SR, SDR, and RIB are documents that have been placed under NNWSI change administration procedures to facilitate control of the design.

2.1 Waste Types and Packages

The wastes to be received at the Yucca Mountain repository are described in a report prepared by O'Brien (1985), which is based on the Mission Plan (DOE, 1985a). The O'Brien report provides the design basis for the repository features that depend on waste type, quantity, and characteristics summarized in Sections 2.1.1 and 2.1.2.

2.1.1 Waste Types

In the conceptual design, it is assumed that the following types of waste, in the quantities indicated, are received at the repository or are generated during repository operations.

2.1.1.1 Spent Fuel

Spent fuel from both pressurized-water reactors (PWR) and boiling-water reactors (BWR) is received at the repository. For the purposes of the conceptual design, the quantities of PWR and BWR are equivalent to 37,200 MTU and 24,800 MTU, respectively. For this design, it is assumed that the fuel is consolidated at the repository. The possibility that some fuel may be "preconsolidated" by the nuclear utilities is not addressed. This simplification is conservative because it slightly overpredicts the number of spent fuel containers to be emplaced. It is also assumed that up to 10% of the fuel will not be consolidated because of mechanical or thermal damage or because the cost of the tooling required for consolidation may not be justified for all fuel types. Unconsolidated fuel assemblies will be packaged and emplaced as intact fuel assemblies.

2.1.1.2 Spent Fuel Hardware

Some non-fuel-bearing "hardware" waste remains after the fuel consolidation operation. This waste includes grid spacers, plenum springs, tie plates, and BWR fuel channels. The quantity of hardware waste depends on the amount of fuel consolidated at the repository.

2.1.1.3 Defense High-Level Waste

Defense high-level waste (DHLW) is the solidified chemical waste from fuel reprocessing associated with the defense activities of the U.S. government. Typically, this waste consists of calcined fission-product and actinide oxides fixed in a matrix of borosilicate glass. DHLW is received in canisters 24 in. in diameter and 118 in. long (Figure 2-1), which are overpacked at the repository before emplacement. The quantity of DHLW to be disposed is equivalent to 7,360 MTU and is assumed to fill 14,720 disposal containers.

2.1.1.4 West Valley High-Level Waste

West Valley high-level waste (WVHLW) was produced in a civilian reprocessing plant operated at West Valley, New York, between 1966 and 1972. WVHLW was derived primarily from commercial power reactor fuel but includes some military waste. The waste form and the canisters in which WVHLW is received are similar to those for DHLW. As in the case of DHLW, the canisters will be overpacked at the repository before emplacement. The total inventory of WVHLW is equivalent to about 640 MTU and fills about 310 disposal containers.

2.1.1.5 Site-Generated Waste

Site-generated waste results from decontamination operations in the cask-receiving and shipping area, from decontamination of the waste preparation and packaging hot cells, and from the laboratories used to survey samples retrieved for the performance confirmation program. The final disposition of site-generated waste has not yet been determined but, for the purpose of this design, it is assumed that this waste will be packaged at the repository for offsite disposal.

2.1.2 Waste Quantities

Table 2-1 indicates the annual waste receipts for which the repository is designed.

2.1.3 Waste Package Design

As defined in 10 CFR 60 (NRC, 1986b), the waste package consists of the waste form, the disposal container, and any additional engineered barriers intended to satisfy containment requirements. For the purpose of this report, the waste package is considered to include only the waste form and the disposal container.

The disposal container for spent fuel that is currently planned for the Yucca Mountain repository has an outside diameter of 26 in., a wall thickness of 0.375 in., and an overall length of 187.5 in. It is handled by means of a pintle attached to one end. Alternate spacers inside the container allow it to be used for either consolidated or unconsolidated (i.e., intact) PWR or BWR fuel. Figure 2-2 shows the container as loaded with the following: (1) fuel rods and hardware from 18 consolidated BWR assemblies, (2) 6 intact BWR assemblies, (3) fuel rods and hardware from

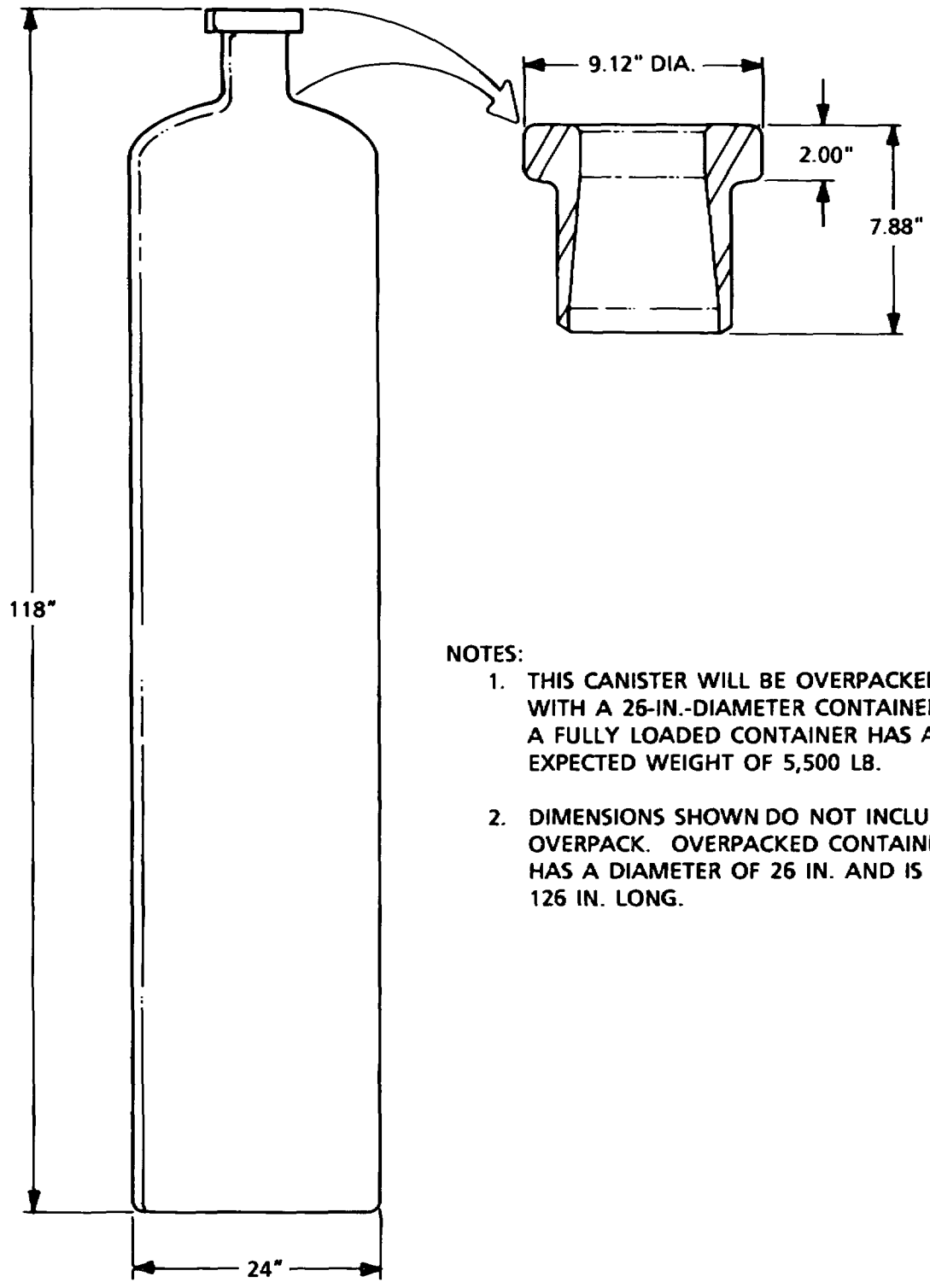

NOTES:

1. THIS CANISTER WILL BE OVERPACKED WITH A 26-IN.-DIAMETER CONTAINER. A FULLY LOADED CONTAINER HAS AN EXPECTED WEIGHT OF 5,500 LB.

2. DIMENSIONS SHOWN DO NOT INCLUDE OVERPACK. OVERPACKED CONTAINER HAS A DIAMETER OF 26 IN. AND IS 126 IN. LONG.

Figure 2-1. Canister for Defense High-Level Waste and West Valley High-Level Waste (Modified from SCP Chapter 7, DOE, in preparation.)

TABLE 2-1

WASTE RECEIPT RATES*

Year	MTU of WVHLW and DHLW This Year	MTU of WVHLW and DHLW Cumulative	MTU of Spent Fuel This Year	MTU of Spent Fuel Cumulative	Cumulative MTU of Spent Fuel and WVHLW/DHLW
1998	0	0	400	400	400
1999	0	0	400	800	800
2000	0	0	400	1,200	1,200
2001	0	0	900	2,100	2,100
2002	0	0	1,800	3,900	3,900
2003	400	400	3,000	6,900	7,300
2004	400	800	3,000	9,900	10,700
2005	400	1,200	3,000	12,900	14,100
2006	400	1,600	3,000	15,900	17,500
2007	400	2,000	3,000	18,900	20,900
2008	400	2,400	3,000	21,900	24,300
2009	400	2,800	3,000	24,900	27,700
2010	400	3,200	3,000	27,900	31,100
2011	400	3,600	3,000	30,900	34,500
2012	400	4,000	3,000	33,900	37,900
2013	400	4,400	3,000	36,900	41,300
2014	400	4,800	3,000	39,900	44,700
2015	400	5,200	3,000	42,900	48,100
2016	400	5,600	3,000	45,900	51,500
2017	400	6,000	3,000	48,900	54,900
2018	400	6,400	3,000	51,900	58,300
2019	400	6,800	3,000	54,900	61,700
2020	400	7,200	3,000	57,900	65,100
2021	400	7,600	3,000	60,900	68,500
2022	400	8,000	1,100	62,000	70,000

*DOE (1985a).

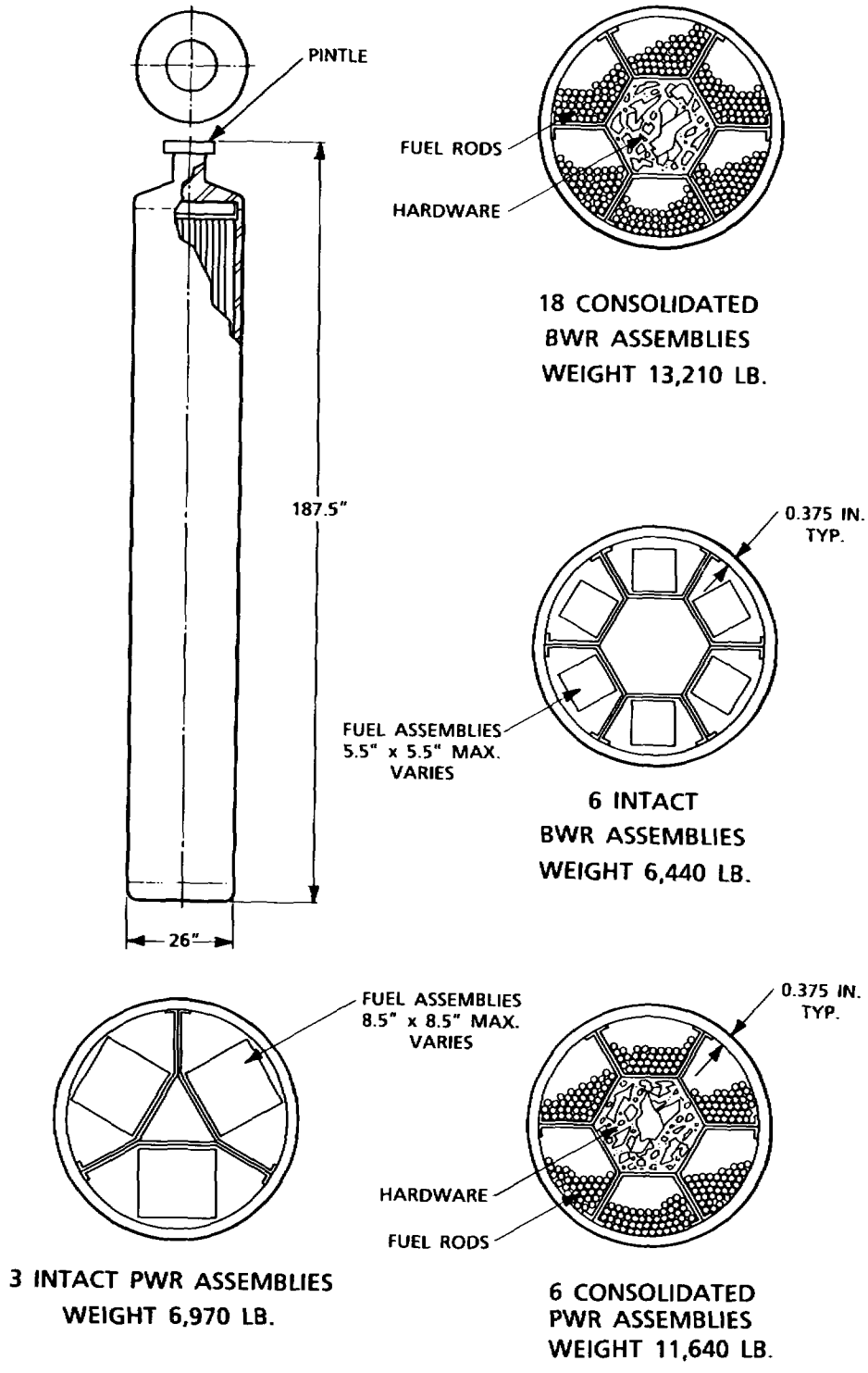

Figure 2-2. Spent Fuel Container (Modified from SCP Chapter 7, DOE, in preparation.)

6 consolidated PWR assemblies, and (4) 3 intact PWR assemblies. The central compartment accommodates all the hardware waste produced in consolidating 6 PWR assemblies but only part of the hardware waste produced in consolidating 18 BWR assemblies; one extra container (without spacers) is required for every 6 containers of consolidated BWR assemblies. When the container is loaded with intact fuel assemblies, the central space is left empty. This space could be used for another assembly or for hardware resulting from fuel rod consolidation. Figure 2-2 shows the estimated container weight for each of the four loading configurations.

The DHWL/WVHLW disposal container, which overpacks the canister (Figure 2-1), is 26 in. in diameter and 126 in. long. Like the spent fuel container, it has a pintle at one end for handling.

Any future changes in the design of the disposal container will have to be evaluated with regard to their effects on the designs of the repository facilities and the waste emplacement and retrieval equipment.

2.2 Site

2.2.1 Introduction

The prospective repository site is located on and immediately adjacent to the southwestern portion of the Nevada Test Site (NTS) in Nye County, Nevada, northwest of Las Vegas. The site is about 85 mi by air and 100 mi by road from Las Vegas.

The site characteristics described in this section are important because they influence the location and layout of the surface and subsurface facilities. In addition, the geologic characteristics of the site form a framework for defining hydrologic, seismologic, thermal, and mechanical properties of the rock, which are needed to design specific repository elements (e.g., ground support and borehole spacing). These rock properties are described in detail in Section 2.3.1.

2.2.2 Terrain

Topographical features influence the choice of locations for the surface facilities and underground accesses. Because of the requirement that all portions of the underground facility be situated at least 200 m below the overlying ground surface [10 CFR 960.4-2-5.d (DOE, 1986a)], the topographical features also affect the delineation of the area usable for the underground portions of the repository.

The Yucca Mountain site lies within the Basin and Range physiographic province, a broad region of generally linear mountain ranges and intervening valleys. The site is in the southern part of the Great Basin, a subdivision of the Basin and Range Province. Figure 2-3 shows the physiographic features in the region. The elevation of the northern end of Yucca Mountain is approximately 1,500 m, which is more than 370 m above the western edge of Jackass Flats to the east and more than 300 m higher than the eastern edge of Crater Flat to the west of Yucca Mountain.

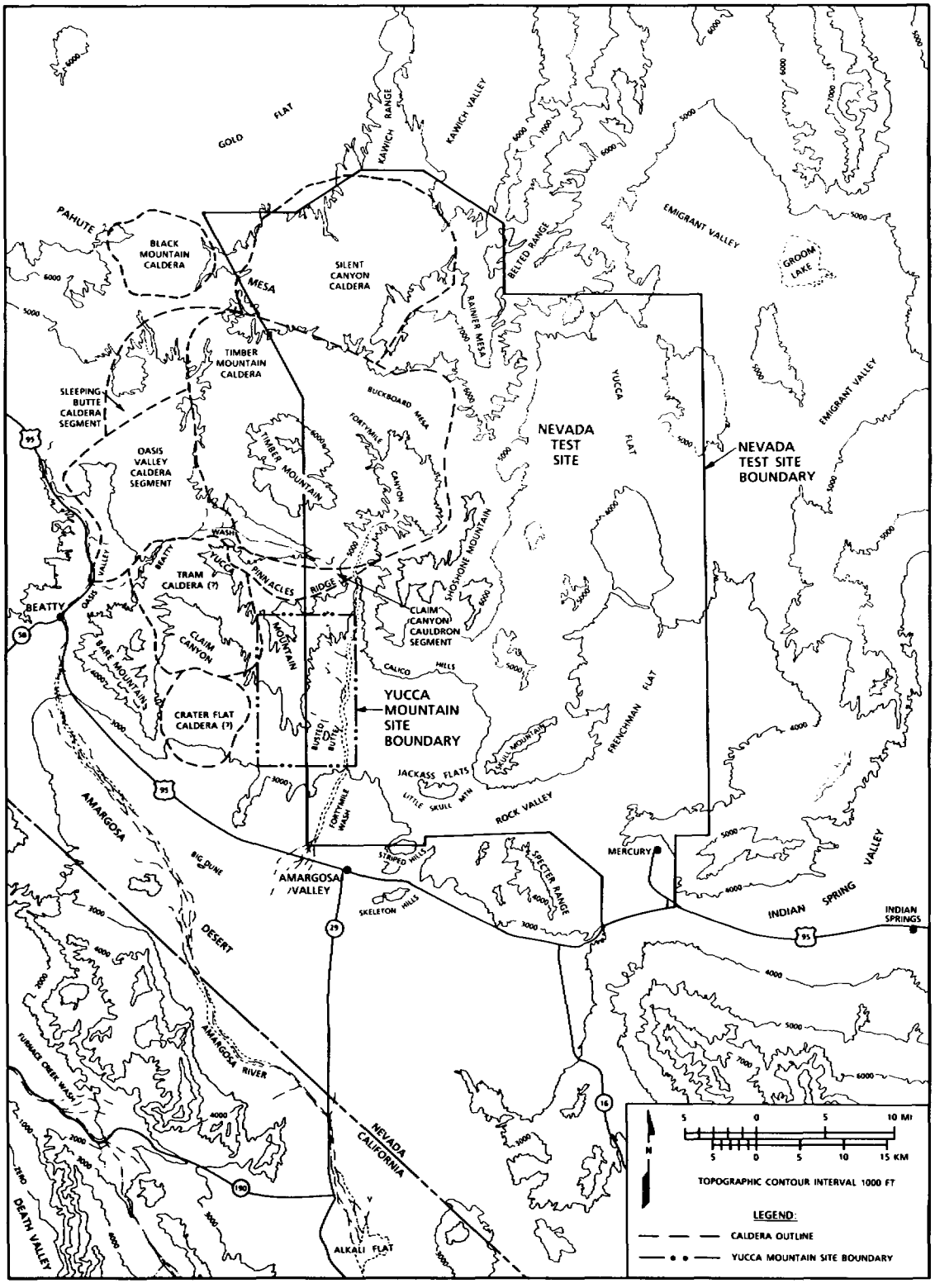

Figure 2-3. Physiographic Features of Yucca Mountain and Surrounding Regions (Maldonado and Koether, 1983.)

Yucca Mountain is a prominent group of north-trending, fault-block ridges that extend southward from Beatty Wash on the northwest to U.S. Highway 95 in the Amargosa Desert. The terrain at the site is controlled by high-angle normal faults and volcanic rocks that tilt eastward. Slopes are locally steep (15 to 30°) on the west-facing side of Yucca Mountain and along some of the valleys that cut into the more gently sloping (5 to 10°) east side of Yucca Mountain. The valley floors are covered by alluvium. Alluvial and colluvial fans extend down from the lower slopes of the ridges. Fortymile Wash is cut 13 to 26 m into the surface of Jackass Flats. North of Yucca Mountain is the high, rugged, volcanic terrain of Pinnacles Ridge. To the west of Yucca Mountain, along the west side of Crater Flat, steep alluvial fans extend from deep valleys that have been cut into Bare Mountain. Basalt cones and small lava flows are present on the surface of the southern half of Crater Flat. The topographic expression of these physiographic features at the site is shown in Figure 2-4. A discussion of the flood zones is presented in Section 2.2.6.

2.2.3 Geology

The geologic characteristics of the site are important to selection of the site, location of the surface facilities, and determination of underground boundaries. The geologic characteristics at the site also provide the framework for reporting all geotechnical and hydrological data. The information presented in this report results from extensive field mapping of the site and adjacent areas, study of core taken from drillholes, and geophysical investigations using drillholes. Unless otherwise indicated, the general descriptions of stratigraphy and structure come from Lipman et al. (1966) and from articles by the Geological Society of America (1968), Byers et al. (1976), Christiansen et al. (1977), Stewart (1980), Spengler et al. (1981), Sinnock (1982), Maldonado and Koether (1983), and Scott and Castellanos (1984).

2.2.3.1 Stratigraphy

The stratigraphy at the site provides a basis, at least in part, for describing the variations in the thermal, mechanical, hydrological, and geochemical properties of the rock. The dip and thickness of the beds within the prospective emplacement horizon influence the layout of the emplacement area and affect the slopes of the drifts.

The regional stratigraphic setting of Yucca Mountain is predominated by four major rock groups. The oldest of these groups, the Precambrian crystalline rocks, is not exposed in the vicinity of Yucca Mountain but may occur at depth beneath portions of the site. The second group, Upper Precambrian and Paleozoic sedimentary rocks, is present at the surface in the Calico Hills, about 15 km east of Yucca Mountain, where it is composed of Devonian and Mississippian argillite and carbonates. Silurian carbonates are encountered at a depth of about 1,250 m in Drillhole UE-25p#1, which is about 2.5 km east of Yucca Mountain.

The third major group, Tertiary volcanic rocks, comprises at least the upper 2,000 m of the total stratigraphic section at Yucca Mountain. These rocks are composed chiefly of rhyolitic ash-flow tuffs, with smaller amounts of dacitic lava flows and flow breccias. Minor amounts of tuffaceous sedimentary rocks and air-fall tuffs occur as interbeds.

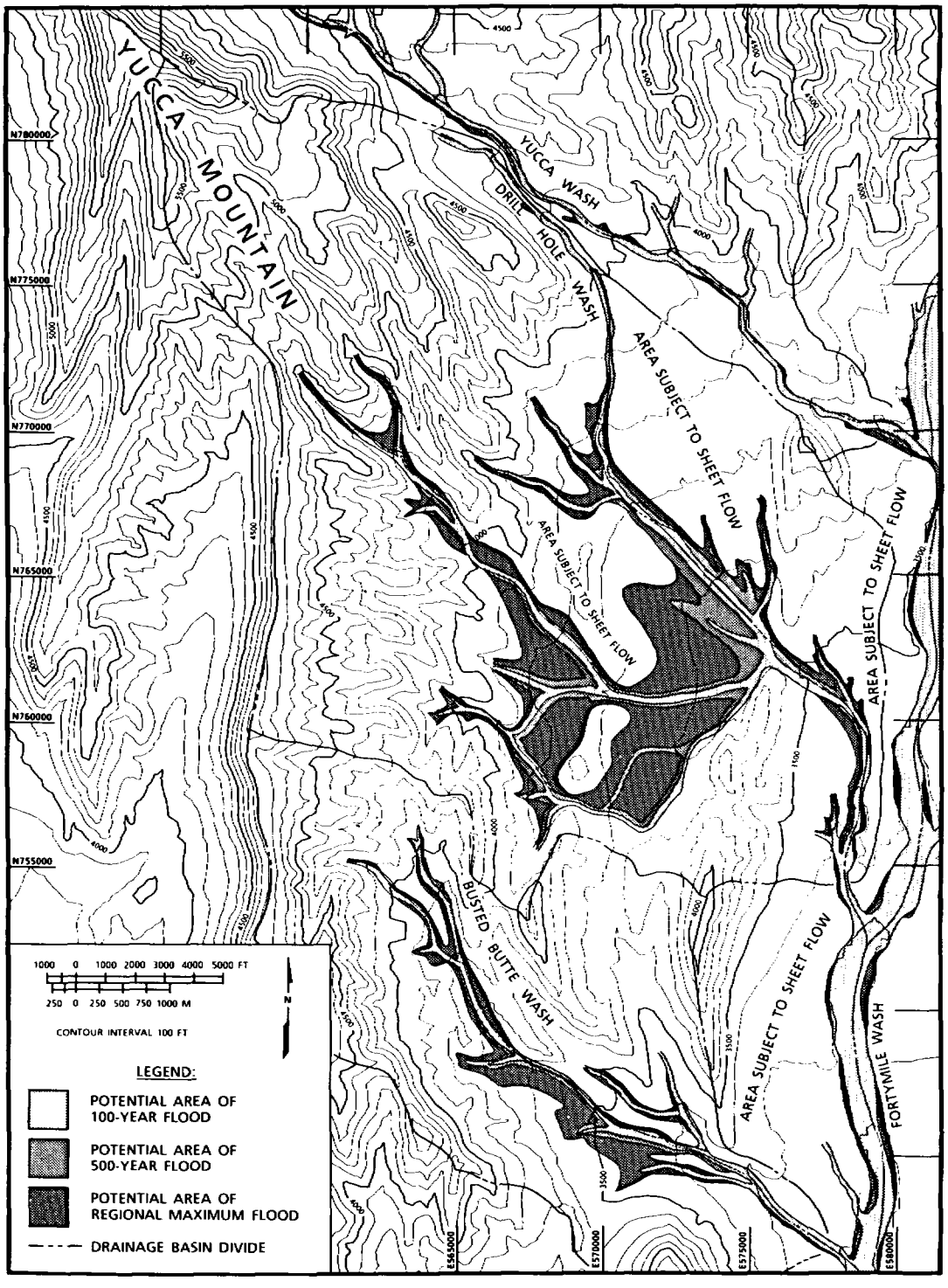

Figure 2-4. Topographic Expression of Physiographic Features and Flood Zones in the Area of the Surface Facilities (Modified from Squires and Young, 1984.)

Quaternary (and uppermost Tertiary) deposits compose the fourth group. This group is represented at Yucca Mountain by alluvium and unsorted debris-flow deposits in channels cut into the uppermost layers of volcanic rocks and by alluvial deposits that form coalescing fans along the east and west sides of the mountain. Thick alluvium (more than 200 m deep) blankets the volcanic rocks beneath Crater Flat to the west and Jackass Flats to the east of Yucca Mountain. The Quaternary sections include eolian sands, caliche, and soil zones. The presence of soil zones implies that these horizons were exposed at the surface for sufficient periods of time between periods of erosion or deposition that a soil profile developed. In Crater Flat, basalt flows and cinder cones of Quarternary Age are present at the surface, and flows are also found interbedded with alluvium below the surface.

The following paragraphs briefly describe the major Tertiary ash-flow tuffs and related stratigraphic units at Yucca Mountain (Table 2-2).

The Timber Mountain Tuff, the youngest volcanic unit exposed at Yucca Mountain, is commonly divided into the Ammonia Tanks Member and the underlying Rainier Mesa Member. Only the Rainier Mesa Member is preserved at Yucca Mountain (Lipman and McKay, 1965). The Rainier Mesa Member is an ash-flow unit that occurs only in low-lying fault blocks at Yucca Mountain, which indicates that the block faults had formed by the time the Rainier Mesa Member was deposited. This unit is a moderately welded, devitrified tuff that grades downward into a nonwelded vitric tuff at the base.

The Paintbrush Tuff consists of four members with thin-bedded, reworked, or air-fall tuffs between them. From the youngest to the oldest, the units are the Tiva Canyon Member, the Yucca Mountain Member, the Pah Canyon Member, and the Topopah Spring Member.

The Tiva Canyon Member forms the caprock at Yucca Mountain and ranges in thickness from 0 m, where it has been eroded away in channels and washes, to more than 50 m on the ridge crests. The member has a moderately to densely welded devitrified central portion, which is underlain by a less densely welded vitric zone. The member is a compound cooling unit, compositionally zoned from rhyolite in the lower and middle parts to quartz latite near the top. Large xenoliths occur at several places in the unit. Flattened lithophysae (voids) are common in the middle and upper parts. Bedded air-fall tuff and tuffaceous sediments up to 3 m thick occur at the base of the member.

The Yucca Mountain Member ranges in thickness from 0 to 36 m. It is a simple cooling unit with nonwelded to partly welded zones at the base, top, and distal portions. North of the site at Drillhole USW G-2, the interior of the member is moderately to densely welded and contains lithophysae. Compositionally, the unit is a rhyolite with little variation from top to bottom (Maldonado and Koether, 1983).

Bedded tuff and nonwelded ash-flow tuffs occur locally between the Yucca Mountain Member and the underlying Pah Canyon Member. These tuffs range in thickness from 0 to 44 m. The matrix is mostly vitric and contains abundant xenoliths of volcanic rocks.

TABLE 2-2

GENERALIZED VOLCANIC STRATIGRAPHY FOR YUCCA MOUNTAIN SHOWING PROBABLE SOURCE CALDERAS AND AGES WHEN CALDERAS WERE ACTIVE[a]

Volcanic Center	Formation	Unit	Age[c]	Range in Thickness[b] (m)[d]
Timber Mountain Caldera	Timber Mountain Tuff	Rainier Mesa Member	11.3	Not encountered
Claim Canyon Cauldron and Oasis Valley Caldera Segments	Paintbrush Tuff	Tiva Canyon Member	12	0-69
		Yucca Mountain Member		0-36
		Pah Canyon Member		11-83[e]
		Topopah Spring Member	13	287-356
Northwest Part of the Calico Hills[f]		Tuffaceous Beds of Calico Hills	13.4	95-306[g]
Crater Flat Caldera	Crater Flat Tuff	Prow Pass Member		127-176[g]
		Bullfrog Member	13.5	99-161[e]
Tram Caldera[f]		Tram Member		154-327
Northern Yucca Mountain Area		Dacitic lava and flow breccia		0-112[h]
Northeastern Crater Flat[e]			ND[i]	
Volcanic Center Uncertain		Tuff of Lithic Ridge	ND	42-311[g]
Northern Yucca Mountain Area		Rhyolitic, quartz latitic, and dacitic lava and flow breccia		9-323
Northeastern Crater Flat[f]			ND	

TABLE 2-2

GENERALIZED VOLCANIC STRATIGRAPHY FOR YUCCA MOUNTAIN SHOWING PROBABLE SOURCE CALDERAS AND AGES WHEN CALDERAS WERE ACTIVE[a] (concluded)

Volcanic Center	Formation	Unit	Age[c]	Range in Thickness[b] (m)[d]
Northeastern Yucca Mountain		Older ash-flow and bedded tuffs	ND	

a. Modified from Maldonado and Koether (1983).
b. Thicknesses based on four drillholes at Yucca Mountain, as reported by Maldonado and Koether (1983).
c. Millions of years.
d. One meter equals 3.28 ft.
e. Includes overlying and underlying bedded tuffs.
f. Volcanic center uncertain.
g. Includes overlying bedded tuffs.
h. Includes underlying bedded tuffs.
i. ND = No age determination available.

The Pah Canyon Member ranges in thickness from 11 to 83 m. It is a simple ash-flow cooling unit with nonwelded to partly welded zones at the base and top and an interior zone of moderate to dense welding north of the site. The member is generally vitric, and tuffaceous sediment and air-fall tuff occur at the base.

The Topopah Spring Member contains the horizon being considered as the potential host rock for the waste emplacement area. The Topopah Spring Member is a compound cooling unit composed of as many as four separate ash-flow sheets, and it varies in composition from low-silica rhyolite near the top to high-silica rhyolite near the base. The unit is about 350 m thick beneath most of the Yucca Mountain site, but it thins abruptly to the south and is absent near the southwestern corner of the NTS. The member also appears to thin to the north, where it is only about 290 m thick in Drillhole USW G-2 (Maldonado and Koether, 1983). The Topopah Spring Member is characterized by four distinct zones from top to bottom: a nonwelded to densely welded, generally vitric tuff; a moderately to densely devitrified tuff that accounts for most of the total thickness of the member; a basal vitrophyre; and a vitric tuff that grades downward from welded to nonwelded. The thickly welded devitrified zone, second from the top, has been selected as the host rock for the waste. The zone contains abundant lithophysae in several intervals, but they are most common in its upper and central portions. In the lower part of the densely welded interval, lithophysae are less abundant, and it is this zone that is preferred as the host rock. The densely welded portions of the tuff are more intensely fractured than the other portions of the Paintbrush Tuff.

The Tuffaceous Beds of the Calico Hills ranges in thickness from 95 to 150 m at the site, although it thickens to nearly 306 m to the north. It is composed chiefly of nonwelded ash-flow tuffs, numerous thin tuffaceous sedimentary beds, and minor air-fall tuffs. The rocks in the northern and eastern part of the site are typically zeolitized, having undergone a low-temperature, low-pressure alteration to zeolite minerals. The rocks in the southern and western part of the site at Drillholes USW G-3 (Maldonado and Koether, 1983) and USW H-5 are vitric and are not zeolitized.

Beneath the Calico Hills unit is the Crater Flat Tuff, which consists of three members: the Prow Pass Member at the top, the Bullfrog Member in the middle, and the Tram Member at the base. The Prow Pass Member is about 127 to 176 m thick at Yucca Mountain. It contains six partly zeolitized, partly devitrified ash-flow tuffs, which probably cooled as a compound unit [Drillhole USW G-1 (Spengler et al., 1981)]. Most of the unit is partially to moderately welded; however, bedded, reworked, and densely welded materials occur in its central part, and zeolitized air-fall tuffs occur at the base. Mudstone fragments, derived perhaps from the Eleana Formation of either the Devonian or Mississippian Age, are abundant in the Prow Pass Member. The Bullfrog Member ranges in thickness from 99 to 161 m and consists predominantly of partially to moderately welded ash-flow tuffs with isolated, thin, densely welded ash-flow tuffs, some of which are zeolitized and devitrified. Reworked bedded tuffs also occur in the Tram Member.

In this document, all rocks below the Crater Flat Tuff are referred to as "older" tuffs. Except for the Lithic Ridge Tuff, no formal stratigraphic units are recognized in the older volcanic rocks. Most of the units have been observed only in drillholes at Yucca Mountain. They generally consist of moderately to densely welded ash flows (interspersed with rhyolitic lava flows, breccia flows, and nonwelded air-fall tuffs) and bedded, reworked tuffs. The total thickness of the older tuffs is unknown. Three drillholes (USW G-1, USW G-2, and USW H-1) have penetrated more than 1,829 m without reaching the base of the volcanic rocks.

The ranges in thickness, spatial extent, and vertical and lateral variations of the stratigraphic units (as determined from the coring, surface-mapping, and geophysical techniques described above) provide a framework for all geotechnical and hydrological data collected. Definition of these stratigraphic units and their variability on all scales is important to understanding the possible range of thermomechanical response to the emplaced waste. Within the stratigraphic units, variations in the degree of welding, devitrification, and zeolitization have been identified. These variations in physical and chemical characteristics can affect the thermomechanical response. The exact manifestations of these effects as they apply to mechanical and thermal properties have not been fully identified. However, redundancy in testing has made it possible to quantify the probable effects of variations of these physical and chemical characteristics on the mechanical and thermal properties measured (Section 2.3.1). For example, empirical relationships between porosity and Young's modulus have been developed (Price and Bauer, 1985). Assessment of the stratigraphic characteristics, coupled with testing to determine mechanical and thermal properties, has permitted the classification of the site according to thermal/mechanical units (Section 2.2.3.3).

2.2.3.2 Structure

Structural elements, such as faults and fractures, are significant factors in evaluating rock-mass behavior. They are used in the empirical, analytical, and numerical models presented in Chapter 7 to determine the thermomechanical response of the host rock. These structural elements were also considered in the location, orientation, layout, and design of both the subsurface and surface facilities.

The structural development of southern Nevada and southeastern California has been long and complex. Crustal extension and associated volcanism, Basin-and-Range-style faulting, and alluvial filling of intervening valleys from 65 million years ago to the present have obscured the relationship of older, regional structural features. The absence of pre-Tertiary rocks at the site constrains the discussion of pertinent structures to those produced by Tertiary extensional tectonics. Field work conducted during the past few decades and recent studies at Yucca Mountain by the NNWSI Project have established a basic understanding of the structural and tectonic framework of this region.

Structural features at Yucca Mountain include faults related to caldera collapse and Basin-and-Range-type faults. The local faults are shown in Figure 2-5. The rocks at Yucca Mountain are gently tilted to the east and are offset by several north-trending, high-angle faults, which drop chiefly to the west, creating several large north-trending structural blocks (Lipman and McKay, 1965; Maldonado and Koether, 1983; Scott et al., 1983; Scott and Bonk, 1984). Other fault systems trend northwest, particularly in the northern and southeastern parts of Yucca Mountain. Detailed mapping of the southern part of the site (Scott and Bonk, 1984) has revealed an area of very closely spaced, small faults that trend northeast. The intersection of the major faults and fault zones defines a set of structural blocks in the Yucca Mountain area.

Rock strata in the horizon targeted for waste emplacement dip eastward at about 5 to 8° (Section 7.3.1.2). This area is bounded on the west by a large fault zone along Solitario Canyon. Vertical displacement along the Solitario Canyon Fault diminishes from about 200 m at the southern end to about 20 m at the northwestern corner. To the east, the primary area (target area for waste emplacement) is bounded by several smaller, closely spaced faults. The northern edge of the primary area is defined by Drill Hole Wash, an informally named feature. The southern boundary is less well defined. One moderately sized fault, designated the Ghost Dance Fault, occurs within the primary area (Scott and Bonk, 1984).

Drillhole data indicate that some minor high-angle faults may have lateral as well as vertical components of displacement, particularly along the northwest-trending faults north of the primary area (Maldonado and Koether, 1983). Displacements along individual faults in the primary area are generally less than 3 m, except for those in the Ghost Dance Fault, which dips steeply to the west. One range of displacement in this fault is from 4 to 38 m (Dudley, 1985). Faults that separate major structural blocks may have 100 or more meters of offset. The density of fractures generally increases in proportion to the degree of welding of

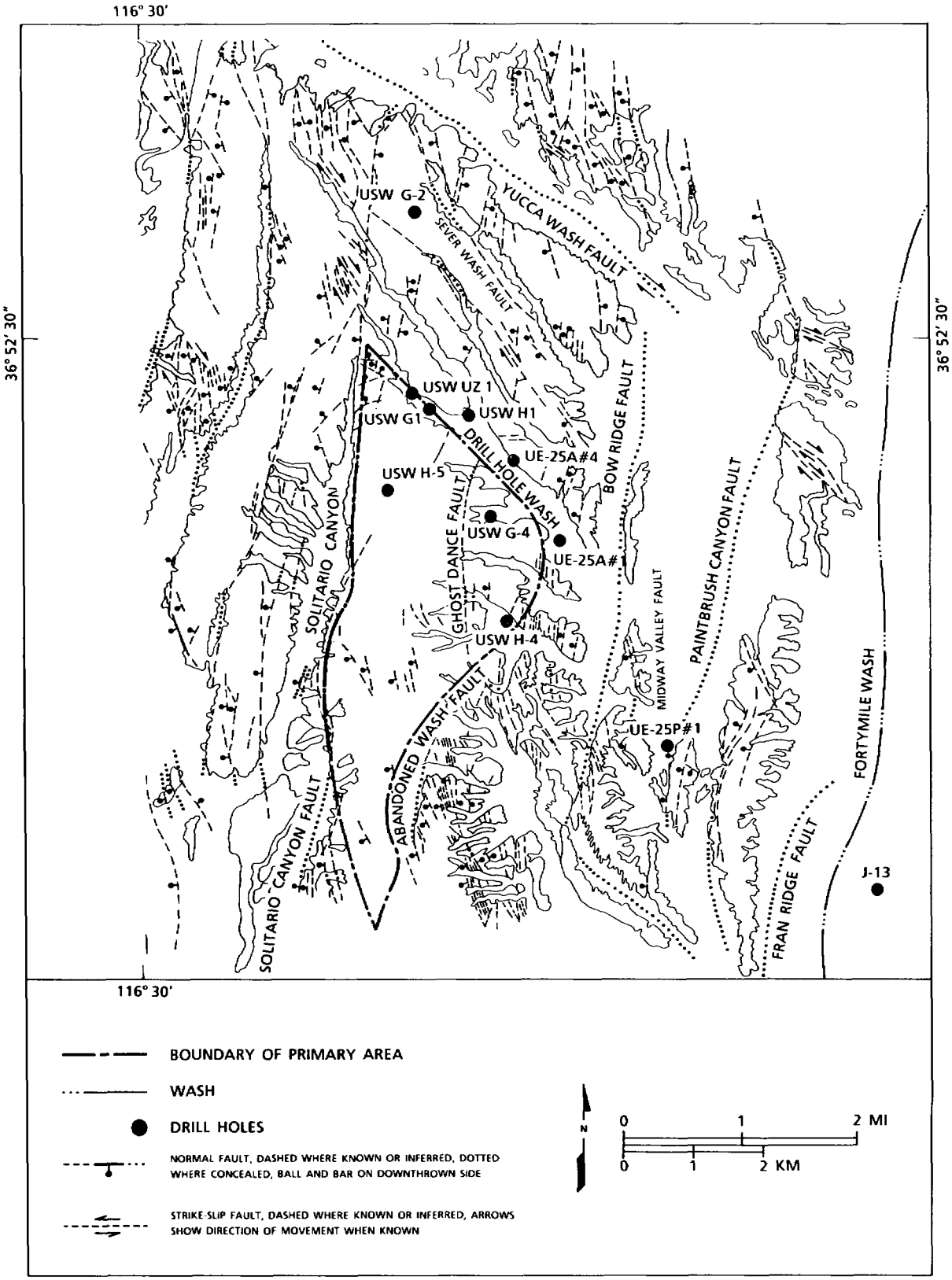

Figure 2-5. Structural Features at Yucca Mountain (Modified from Scott and Bonk, 1984.)

the stratigraphic units. Fracture density probably increases near major faults and in some local areas in which there are abundant faults with small offset.

Thirty-two faults within a 1,100-km^2 area around the site displace or fracture Quaternary deposits. Five faults are thought to have moved between about 270,000 and 40,000 yr ago, 4 faults about 1 million years ago, and 23 faults between 1 and 2 million years ago (Swadley et al., 1984). No evidence of fault displacement younger than 40,000 yr has been confirmed; recently available but unevaluated thermoluminescence dates may indicate 1 to 10 cm of fault displacement in eastern Crater Flat less than 6,000 yr ago (Dudley, 1985).

The history and relationship of fractures and faults presented above and their site-specific subsurface expression are important to the design of the subsurface and surface facilities because fractures and faults introduce uncertainty in the determination of potential mechanical and thermomechanical responses. These features impart mechanically discontinuous material behavior to the rock mass. Spatial variations in the occurrence of these structural elements introduce a degree of uncertainty in the analyses that address the thermomechanical response of the rock mass. Specific data on these rock discontinuities are presented in Section 2.3.1.

2.2.3.3 Three-Dimensional Model of Thermal/Mechanical Stratigraphy

The thermal/mechanical stratigraphy of Yucca Mountain tuffs (Figure 2-6) is a stratigraphic definition based on rock properties rather than on classical geological guidelines. It is defined through a stratigraphic breakdown of the tuffs at Yucca Mountain based on unit-specific bulk, thermal, and mechanical properties (Ortiz et al., 1985). These thermal/mechanical units do not correspond exactly to the stratigraphic units described in Section 2.2.3.1. Definition of the thermal/mechanical stratigraphy, coupled with stratigraphic and structural characterizations of the type summarized in the two preceding sections, has enabled the development of a three-dimensional model of the site (Ortiz et al., 1985). The three-dimensional geometric relationships of the thermal/mechanical units have been estimated using a modeling technique described by Nimick and Williams (1984). The input data for the model consist of depths of contact between thermal/mechanical units in existing drillholes at Yucca Mountain. These data permit derivation of an equation that describes a three-dimensional surface representing each thermal/mechanical unit. The surface descriptions are adjusted to account for fault offset. Thus, the three-dimensional model provides the spatial distribution of each thermal/mechanical unit through both stratigraphic and structural control (Figure 2-7). Uncertainty in the model is related to sparse data and assumptions linked to the interpolation of surfaces, unit definitions, and model algorithms. As additional drillhole data are obtained, the three-dimensional model will be refined.

2.2.4 Hydrologic Considerations

Hydrologic considerations, including infiltration (water flow into the soil at the ground surface), percolation (water flux through the rock

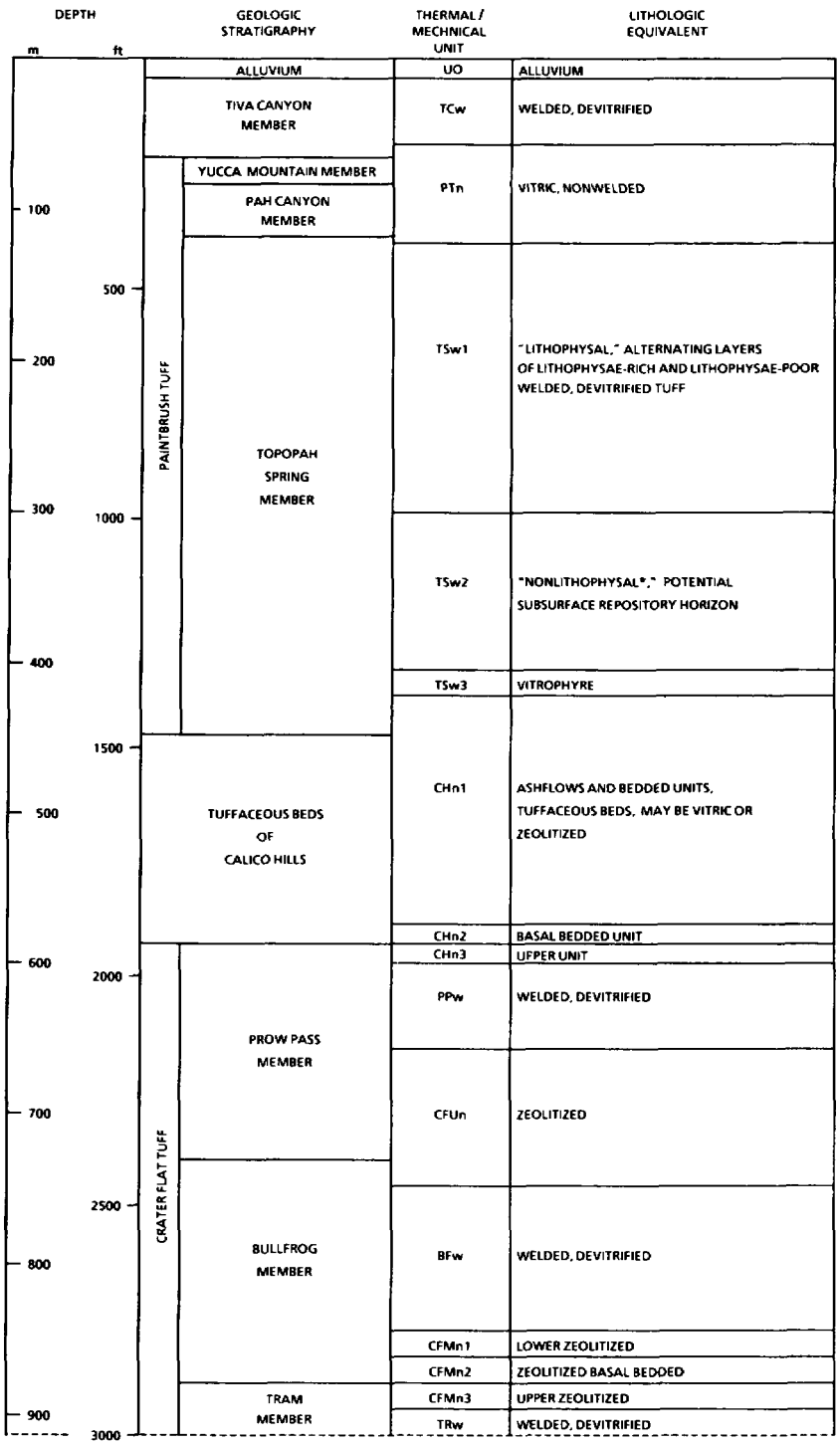

*The nonlithophysal portion of the Topopah Spring Member may contain a small percentage of lithophysae.

Figure 2-6. Thermal/Mechanical Stratigraphy at Yucca Mountain (Ortiz et al., 1985.)

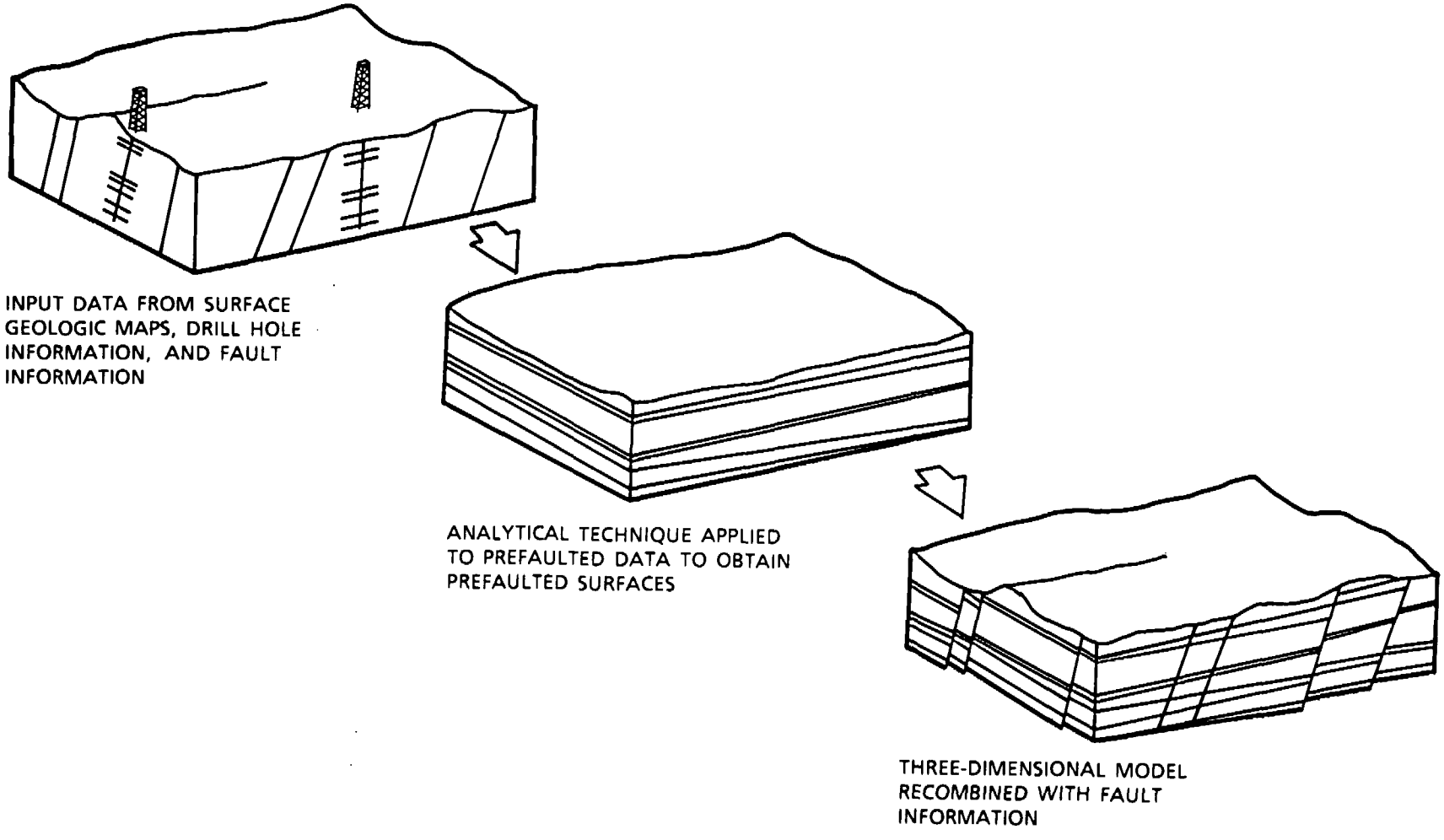

Figure 2-7. Schematic Development of the Three-Dimensional Model (After Ortiz et al., 1985.)

units below the ground surface), hydraulic conductivity (rate of water movement through the rock under unit hydraulic gradient), and flood potential are factors important to the design from the standpoints of stability, ventilation, and sealing. Infiltration, percolation, and hydraulic conductivity are discussed below.

2.2.4.1 Surface Water

The surface hydrology of the site influences the design of the surface facilities through both the location and flow frequencies of surface runoff. In addition, infiltration of surface water may influence the subsurface design. No perennial streams occur at or near Yucca Mountain; the only reliable sources of surface water are the springs in Oasis Valley, the Amargosa Desert, and Death Valley. Because of the extreme aridity of this region, where the annual precipitation averages about 20% of the potential evapotranspiration, most of the spring runoff travels only a short distance before evaporating or infiltrating back into the ground. Infiltration rates are low because of low precipitation, high runoff, and high evaporation rates.

During heavy precipitation, surface runoff flows in the normally dry washes for brief periods. As a consequence, the runoff may exceed the capacity of the channels. The potential for flooding at Yucca Mountain is described in detail in Section 2.2.6. Runoff from precipitation at Yucca Mountain drains into Fortymile Wash on the east and Crater Flat on the west, and both areas drain into the normally dry Amargosa River. If the runoff is very high, water in the Amargosa River flows into the playa in southern Death Valley.

2.2.4.2 Ground Water

Yucca Mountain lies within the Death Valley ground-water system, which includes part of southern Nevada and adjacent parts of California. This area is composed of many mountain ranges and topographic basins that are hydraulically connected at depth. In general, ground water in the Death Valley system travels toward Death Valley, although much of it discharges before reaching Death Valley.

The Death Valley ground-water system is divided into several ground-water basins. Current information indicates that ground water moving beneath Yucca Mountain discharges at Alkali Flat, and perhaps at Furnace Creek in Death Valley, but not in Ash Meadows or Oasis Valley. Yucca Mountain is in the Alkali Flat/Furnace Creek Ranch ground-water basin at a position midway between the Ash Meadows and the Oasis Valley basins (Waddell, 1982).

Geologic formations in southern Nevada have been grouped in hydrogeologic units (Winograd and Thordarson, 1975; Montazer and Wilson, 1984; Rush et al., 1983; Peters et al., 1984) (Figure 2-8). Several of the units (aquifers) transmit water in sufficient quantities to supply water to wells or springs, whereas other units (aquitards) have relatively low permeabilities that tend to retard the flow of ground water. The geologic and hydrologic properties of the aquifers vary widely. The lower and upper carbonate aquifers and the welded tuff aquifers store and transmit water chiefly along fractures. In contrast, the valley-fill alluvial

STRATIGRAPHIC UNIT		TUFF LITHOLOGY [a]	HYDROGEOLOGIC UNIT [b]	APPROXIMATE THICKNESS (METERS)	SATURATED MATRIX HYDRAULIC CONDUCTIVITY	COMMENTS
Alluvium		---	Alluvium	0–30	Generally high	Underlies washes; thin layer on flats.
Paintbrush Tuff	Tiva Canyon Member	MD	Tiva Canyon welded unit	0–150	1 mm / yr	Caprock that dips 5–10° eastward at Yucca Mountain. High fracture density.
Paintbrush Tuff	Yucca Mountain Member	NP, B	Paintbrush nonwelded unit	20–100	3300 mm / yr	Vitric, nonwelded, porous, poorly indurated, bedded in part. Low fracture density.
Paintbrush Tuff	Pah Canyon Member	NP, B	Paintbrush nonwelded unit	20–100	3300 mm / yr	Vitric, nonwelded, porous, poorly indurated, bedded in part. Low fracture density.
Paintbrush Tuff	Topopah Spring Member	MD	Topopah Spring welded unit	290–360	0.7 mm / yr	Densely to moderately welded. Several lithophysal cavity zones; intensely fractured. Central and lower part is potential host rock for repository. Bulk hydraulic conductivity in saturated zone east of the site (at Well J-13) about 1.0 m / day.
Tuffaceous Beds of Calico Hills		NP B; Vitric, Devitrified (in part zeolitic)	Calico Hills nonwelded unit; Water table	100–400	Vitric: 107 mm / yr	Beneath Yucca Mountain, base of units for unsaturated zone determined by water table. Calico Hills nonwelded unit is vitric in southwest Yucca Mountain, zeolitic in east and north. Zeolitic boundary generally parallels the water table with vitric units above and zeolitic units below a transitional boundary.
Crater Flat Tuff	Prow Pass Member	MD	PP_w	88 mm / yr	Zeolitic: 0.5 mm / yr	
Crater Flat Tuff	Prow Pass Member	NP, B	PP_n	88 mm / yr	22mm / yr	
Crater Flat Tuff	Bullfrog Member	MD	BF_w	0–200	118 mm / yr	
Crater Flat Tuff	Bullfrog Member	NP, B	BF_n	0–200	22 mm / yr	
Crater Flat Tuff	Tram Member	NP, B	Crater Flat Member	170–350	22 mm / yr	None
Lava		Undifferentiated		0–250	Very low	Occurs in northeast part of primary area.
Lithic Ridge Tuff		Undifferentiated		80–190	Very low	None
Older Volcanics		Undifferentiated		---	Very low	In USW H-1 hydraulic head about 50 m higher than water table.
Pre-Tertiary Rocks		Undifferentiated		---	Unknown	Occurs 2.5 km east of proposed repository at depth of 1250 m in UE-25p #1, where hydraulic head is about 20 m higher than water table. Bulk hydraulic conductivity high, probably due to high fracture density.

a. NP = nonwelded to partially welded, MD = moderately to densely welded, B = bedded.

b. PP_w = Prow Pass welded unit, PP_n = Prow Pass nonwelded unit, BF_w = Bullfrog welded unit, BF_n = Bullfrog nonwelded unit.

Figure 2-8. Dual Classification of Tertiary Volcanic Rocks of Yucca Mountain (DOE, 1986b.)

aquifers store and transmit water chiefly through interstitial openings. The lower carbonate and valley-fill aquifers are the main sources of ground water in the eastern part of the NTS.

The unsaturated zone at Yucca Mountain is about 500 to 700 m thick inside the boundary of the primary area but thins to as little as 200 m within 10 km of the site. The regional water table is 200 to 400 m below the horizon proposed for the emplacement area. In the Yucca Mountain area, the water table slopes to the southeast from an elevation of 800 m to approximately 730 m above sea level.

Most of the annual precipitation, approximately 150 mm (Montazer and Wilson, 1984), is returned to the atmosphere by evaporation and transpiration. A small part of the precipitation at Yucca Mountain percolates through the matrix of the unsaturated zone. Czarnecki (1985) estimated a recharge rate of 0.7 mm/yr for the precipitation zone that includes Yucca Mountain. The principal source of recharge for the tuff aquifer is probably Pahute Mesa to the north of Yucca Mountain (Figure 2-3). The general direction of regional ground-water flow is south-southwest.

The potential emplacement horizon in the densely welded Topopah Spring is located above the ground-water table, where the in situ saturation is 65 $\pm$19%. Estimated percolation rates through this unsaturated zone are on the order of 0.5 mm/yr (Montazer and Wilson, 1984). The saturated hydraulic conductivity of the entire rock mass is estimated to be on the order of 365,000 mm/yr (Sinnock et al., 1984). This value compares with an assumed saturated hydraulic conductivity in nonfractured rock of approximately 0.6 mm/yr (Peters et al., 1984) for matrix flow through the Topopah Spring Member. Thus, the magnitude of the saturated hydraulic conductivity of the rock mass is governed almost entirely by the presence of fractures. However, because the units within and above the proposed emplacement horizon are unsaturated, the in situ hydraulic conductivity of the units is significantly less than the saturated value. At 84% saturation, the upper bound, it is uncertain whether fracture flow is involved.

Exploratory drilling at the site has not encountered any saturated zones above the water table that can be definitely identified as perched water, and it is not expected that any major perched water zones will be encountered. This experience does not preclude the possibility that some localized zones of saturation may exist within fault zones or beneath areas of high infiltration of surface runoff.

Ground water has been observed to flow from fractures at G-Tunnel (in Rainier Mesa) following drift excavation, but the flow eventually ceased. All the ground water observed in the tunnels came from fractures in the zeolitic-bedded tuff; this water is best described as fracture water. The tunnels acted as a drain for the water-bearing fractures that they intersected. The draining of individual fractures after they had been penetrated by the tunnels was characterized by a maximum initial discharge that decreased gradually until, in a few days, the discharge was only a small seep or drip. Most of the fractures drained completely within a few weeks or months, but water dripped from some fractures for 2 yr or more (Thordarson, 1965). Similar localized flow from faults could occur within the prospective emplacement horizon (Section 5.1.3.1).

The depth to the carbonate aquifer beneath the primary area has not been demonstrated, but it is probably much more than the 1,250 m observed in Drillhole UE-25p#1 located 2.5 km east of the primary area (Figure 2-5). At Drillhole UE-25p#1, the hydraulic head in the carbonate rocks is 20 m higher than it is in the overlying tuffaceous rocks (Waddell et al., 1984). Because water cannot move in the direction of higher hydraulic head, it has been concluded that ground water in the tuff aquifers beneath Yucca Mountain does not enter the carbonate aquifer.

Deep regional movement of ground water south and east of Yucca Mountain occurs chiefly through the lower carbonate aquifer. As a result of the complex geologic structures, flow paths are complex and poorly defined.

2.2.5 Near-Surface Soil and Rock

It is necessary to know the physical and engineering properties of the near-surface soil and rock because these properties influence the locations selected for the surface facilities and the design of the structural foundations. Limited preliminary investigations consisting of four test pits and eight exploratory borings contributed to selection of a reference site for the central surface facilities for the purpose of the conceptual design (Neal, 1985). In general, the top 0.3 to 0.7 m is a loose, fine-grained, sandy soil overlying approximately 2 m of material, which is partially to wholly cemented with calcite (caliche). Below the caliche layer is a layer 11 to 50 m thick of very dense, gravelly, sandy alluvium that overlies the ash-flow tuff bedrock.

A summary of the physical and engineering properties of surface materials at the reference location of the central surface facilities is presented in Table 2-3. These properties are based on preliminary tests performed on samples of the underlying uncemented surface materials at the location of the reference surface facilities. Samples were taken at depths of 4 m or less. The combination of the paucity of data and the fact that certain of the recommended values and ranges are based entirely on engineering judgment attaches a fair degree of uncertainty to the values listed. Nonetheless, these measurements and recommended values can be considered conservative estimates for use in foundation designs because the foundations are based on soils at or below these depths and the strength of granular materials normally increases with normal stress (overburden thickness) in accordance with the Coulomb criterion (Jaeger and Cook, 1969).

2.2.6 Flood Zones

Because of the rugged terrain and meteorological conditions at the Yucca Mountain site, local intense flooding occurs periodically in the normally dry washes that drain the Yucca Mountain ridge. In the vicinity of the site, Fortymile Wash and three of its principal tributaries--Yucca Wash, Drill Hole Wash, and Busted Butte Wash--have been analyzed for the effects of the 100-yr flood, 500-yr flood, and regional maximum flood (Squires and Young, 1984). Because it has been shown that water from a 100-yr flood does not overflow the banks of incised channels, the manifestations of a 50-yr flood are not presented. The flood zones in the area of the surface facilities, based on the analysis, are shown in Figure 2-4.

TABLE 2-3

SUMMARY OF PHYSICAL AND ENGINEERING PROPERTIES OF SURFACE MATERIALS[a]

Physical Properties[b]	Value
Soil Classification	GP to GM[c]
Natural Moisture Content	7.2%
Absorption	7.9%
In Situ Density	1.62-1.79 g/cm^3 (101-112 pcf)
Percentage of Maximum Dry Density	93.5-100%
Specific Gravity of Soil Solids	2.43
Void Ratio	0.37
Optimum Moisture Content at Maximum Dry Density	12.0-14.7%

Engineering Properties[d]	Value
Young's Modulus	0.7-1.4 GPa (10,000-20,000 psi)
Poisson's Ratio	0.30-0.35
Modulus of Subgrade Reaction	5,536-8,304 g/cm^3 (200-300 psi)
Cohesion	0
Angle of Internal Friction	33-37°
Allowable Bearing Pressure[e]	0.3 MPa (6,000 psf)

a. All the information in this table is taken from Ho et al. (1986).
b. Values and ranges of physical properties are from Test Pit SFS-3.
c. Soils classified as GP include poorly graded gravels, gravel and sand mixtures, and few or no fines. Soils classified as GM include silty gravels and gravel/sand/silt mixtures, which may be poorly graded.
d. Estimated from index properties.
e. For footings wider than 4 ft, subject to verification that settlement will be tolerable in the case of large structures.

The 100- and 500-yr floods are based on a regional analysis of stream-flow records at sites on the perimeter of the NTS and Nellis Air Force Range, which are representative of the repository site. To determine the regional maximum flood, data were used from maximum flood flows that have been measured at other locations in the region, including all or parts of Nevada, California, Utah, Arizona, and New Mexico (Crippen and Bue, 1977). Flood characteristics at the site were derived only on the basis of the area of the drainage basin. (Site-specific characteristics, such as ground slope, runoff, and infiltration, are not represented.)

It was concluded from this preliminary analysis that all flood flows along Fortymile Wash would remain within the incised channel throughout the study area. In addition, it was concluded that in the Busted Butte and Drill Hole Wash drainages, the 500-yr flood would exceed stream channel capacities at several places and that the regional maximum flood

would inundate sizable areas in the central parts of the watersheds. It was concluded that flood flows of all three magnitudes at Yucca Wash would remain within the stream channel.

The later stages of repository design will be based on the flows and levels of the probable maximum flood (PMF) determined in accordance with ANSI/ANS-2.8 (ANSI, 1981). This method, which takes into account site-specific characteristics (terrain, and soil and rock conditions) of the drainage basin, is used by the U.S. Army Corps of Engineers for dam design and by the nuclear power industry for protection of safety-related facilities. The PMF method is more site specific and stringent than the regional maximum flood analyses.

In general, the surface facilities important to safety and the underground entries will be protected against the PMF by constructing channels and/or dikes to divert surface runoff and by setting the finished grades at elevations above the PMF levels. This design effort will be finalized when definitive topographic maps and other data become available.

2.2.7 Archaeological Resources

Reviews of literature have been conducted pertaining to the archaeological, cultural, and historical resources of Yucca Mountain and the surrounding vicinity. Extensive field surveys were subsequently performed in areas that might be disrupted as the result of site investigation or preparation activities. To date, more than 30 km^2 have been surveyed on and near Yucca Mountain (Pippin et al., 1984). Although the archaeological resources of this area have been mapped, the locations are considered sensitive and, therefore, do not appear in this report.

An archaeological site is identified as any location of past human activity evidenced by the presence of material items manufactured or altered by man (stone tools, pottery), architectural structures (walls, windbreaks), or functionally specific facilities (hearths, pits, and cairns) (Pippin and Zerga, 1983). Thus, a location that contains anything from a single pottery shard to a large campsite is recorded as an archaeological site.

One hundred seventy-eight prehistoric aboriginal sites have been identified in the area. These sites consist of 21 campsites (defined as temporary locations), 141 extractive locations, and 16 unclassified sites. The campsites were recognized by the presence of artifacts, structures, and facilities related to food preparation and consumption; shelter; and other maintenance activities, such as the manufacture or repair of clothing and tools. The extractive locations are the remains of more limited, task-specific activities associated with hunting, gathering, and processing wild plants and with procurement of other raw materials used in manufacturing tools and clothing.

2.3 Data and Assumptions

This section summarizes the principal design values used in considering the geomechanical, meteorological, seismological, and human-induced phenomena used in the conceptual design. Appendix O lists and briefly

discusses the properties and parameters as they have evolved during the design process. The basis for these values is either presented or referenced. Geochemical data summarized in Section 2.3 are also listed in Appendix Q. Appendix Q contains a more comprehensive presentation of the site design parameters. The data contained in this section and in Appendix Q are also used for design analysis (Chapter 7). In many cases, the values used in the design analyses differ from the mean value given in Appendix Q but are within the expected range of values also given in Appendix Q. Design analyses in future design phases will use mean values and various off-mean values (even-limit values), as justified by the analyses.

2.3.1 Rock Properties

2.3.1.1 Bulk Properties

The thermal and mechanical responses of the tuff to development of the subsurface facilities and waste emplacement at the Yucca Mountain site are governed by the properties of the intact rock, as well as by the presence of joints, fractures, lithophysae, and other discontinuities.

Bulk properties, which include porosity, grain density, and bulk density, are important to understanding the physical nature of the mechanical and thermal responses of tuff and are presented in Table 2-4. Descriptions of the thermal/mechanical stratigraphic units are presented in Section 2.2.3.3. Thermal/mechanical stratigraphic units are individual lithologic units that have similar thermal/mechanical properties as ascertained by experiment and analysis.

Total porosity is the ratio of the volume of void space to the total volume of a material and includes matrix porosity, lithophysal porosity, and fracture porosity. Porosity is important to understanding bulk density and thermal and mechanical properties. For example, porosity is used to define the maximum water content that can exist in the rock in the 100% saturated state. Water content is important in understanding thermal properties (Section 2.3.1.5) and in performing thermal and mechanical analyses. The term "lithophysal" is applied to two portions of the TCw, TSw1, and TSw2 units that contain lithophysae. Price et al. (1985) provide a detailed description of lithophysae and the partitioning of porosity in Unit TSw1. Lithophysae can locally increase the porosity of the rock mass to a value of about 40%. This understanding is important because the reference saturation state (and consequent bulk and thermal properties) is based on hydrologic considerations that indicate that lithophysal voids are not saturated when the matrix is less than 100% saturated.

The total porosities of all thermal/mechanical units presented neglect the potential contribution of fracture porosity. Fracture porosity is the ratio of void volume of fractures to the volume of the portion of the rock mass under consideration. Erickson and Waddell (1985) estimate that the fracture porosities for thermal/mechanical units at the site range from 0.01 to 0.1%. Because the total porosities for the thermal/mechanical units are two orders of magnitude greater than the fracture porosities reported, their potential effect on thermal properties (which is a volumetric contribution) in the context of the following discussion

TABLE 2-4

PHYSICAL PROPERTIES OF INTACT ROCK AND THE ROCK MASS FOR THERMAL/MECHANICAL UNITS AT YUCCA MOUNTAIN[a]

Thermal/ Mechanical Unit[c]	Grain Density (g/cc)			Porosity			In Situ Saturation			Bulk Density at In Situ Saturation (g/cc)		Dry Bulk Density (g/cc)	
	Design Value[b]	Variability Evaluation[b]		Design Value[b]	Variability Evaluation[b]		Design Value[b]	Variability Evaluation[b]		Design Value[b]	Variability Evaluation Value[b]	Design Value[b]	Variability Evaluation Value[b]
		Value	Range		Value	Range		Value	Range				
TCw	2.51	2.51	±0.04	0.114	0.11	±0.04	0.8	0.67	±0.23	2.32	2.31	2.23	2.23
PTn	2.37	2.37	±0.15	0.448	0.45	±0.15	0.8	0.61	±0.15	1.67	1.58	1.31	1.30
TSw1[d]	2.53	2.54	±0.04	0.148	0.14	±0.04	0.8	0.65	±0.19	2.27	2.25	2.15	2.15
TSw1[e]	2.53	2.53	±0.02	0.348	0.35[f]	±0.03[f]	0.8	0.65	±0.19	2.00	NA	1.65	NA
TSw2	2.55	2.55	±0.03	0.121	0.12	±0.03	0.8	0.65	±0.19	2.34	2.32	2.25	2.24
TSw3	2.39	2.39	±0.02	0.043	0.04	±0.03	0.8	0.65	±0.19	2.34	2.32	2.25	2.29
CHn1v	2.34	2.34	±0.05	0.365	0.36	±0.09	0.8	0.90	±0.06	1.78	1.82	1.49	1.50
CHn1z	2.41	2.41	±0.06	0.327	0.33	±0.04	0.8	0.91	±0.06	1.96	1.92	1.63	1.61
CHn2z	2.54	2.54	±0.12	0.286	0.29	±0.06	1.0	1.0[g]	NA[h]	1.96	2.09	1.63	1.80
CHn3z	2.41	2.41	±0.04	0.360	0.36	±0.08	1.0	1.0[g]	NA	1.96	1.90	1.63	1.54
PPw	2.58	2.58	±0.04	0.240	0.24	±0.07	1.0	1.0[g]	NA	2.20	2.20	1.96	1.96
CFUn	2.43	2.43	±0.07	0.297	0.30	±0.08	1.0	1.0[g]	NA	2.00	2.00	1.17	1.70
BFw	2.60	2.60	±0.04	0.238	0.24	±0.08	1.0	1.0[g]	NA	2.23	2.22	1.98	1.98
CFMn1	2.41	2.41	±0.06	0.246	0.25	±0.05	1.0	1.0[g]	NA	2.09	2.06	1.83	1.81
CFMn2	2.52	2.52	±0.06	0.242	0.24	±0.03	1.0	1.0[g]	NA	2.09	2.16	1.83	1.92
CFMn3	2.44	2.44	±0.07	0.267	0.27	±0.03	1.0	1.0[g]	NA	2.09	2.05	1.83	1.78
TRw	2.63	2.63	±0.04	0.188	0.19	±0.05	1.0	1.0[g]	NA	2.32	2.32	2.14	2.13

a. See Appendix O.
b. Design values represent the basis for this Site Characterization Plan Conceptual Design Report (SCP-CDR); variability evaluation represents more recent results of data analyses and establishes ranges for properties.
c. Figure 2-6 provides a definition of thermal/mechanical units.
d. Nonlithophysal layers in Unit TSw1.
e. Lithophysal layers in Unit TSw1.
f. For lithophysal layers, the total porosity is $\phi_m \cdot M + \phi_A \cdot A + \phi_L$, where ϕ_m is matrix porosity, ϕ_A is the porosity of the vapor-phase-altered material, ϕ_L is the volume fraction lithophysal cavities, and M and A are volume fractions of matrix and vapor-phase-altered material, respectively (Price et al., 1985).
g. These units are at least partly below the water table. For the purpose of thermal/mechanical analyses, they have been assigned a saturation of 1.0.
h. NA--not available.

is considered negligible. The range in porosity is represented by the mean value plus and minus one standard deviation from the mean.

Grain density is defined as the grain weight divided by the grain volume; bulk density is defined as the sum of the grain plus pore water weight divided by the bulk volume. These two parameters are important in understanding thermal properties (Sections 2.3.1.5 and 6.4.4), performing thermal analyses (Section 6.4.4), and performing mechanical analyses (Section 7.1.3). The range represents plus and minus one standard deviation from the mean. For bulk density, two values are presented for each unit: the value of the observed in situ saturation and a value for dry rock.

The corresponding values for in situ saturation presented for thermal/mechanical units located above the water table (Table 2-4) were obtained from laboratory measurements on cores taken from the site (Montazer and Wilson, 1984). A 100% saturation state was assumed for thermal/mechanical units located below the water table. Thermal conductivity for all units and thermal capacitance for the units below the water table (Unit PPw and underlying units) are for a nominal saturation of 1.0 (100% saturation), whereas thermal capacitance is calculated using saturations from Montazer and Wilson (1984) for units above the water table (Unit CHn3z and overlying units).

2.3.1.2 Deformability Properties

Deformability properties are parameters necessary for performing the analyses (Section 7.3.2) that determine the mechanical response induced by excavation (mechanical) and waste emplacement (thermomechanical). In the context of the reference design data base, deformability properties are defined as those properties of intact rock, fractures, and rock mass that relate stress to strain before the onset of yield (as defined in Section 2.3.1.3).

For intact rock (Table 2-5), the deformability properties of interest are Young's modulus and Poisson's ratio. The reference value is the mean of available laboratory measurements or is determined from empirical relationships, and the range is represented by plus and minus one standard deviation from the mean. These values were determined from data collected on approximately 300 samples deformed under a standard set of conditions. Data collected on other samples, which were deformed to investigate potential environmental effects, are not significantly different from the data presented here, which include data for strain rate, temperature, and scale (Price, 1986).

Other deformability properties required for the analytical techniques used to determine the mechanical response of fractured rock in Section 7.1.3 are the shear and normal stiffness of joints. The shear stiffness values and coefficients of friction presented in Table 2-6 are derived from limited laboratory measurements of tuff (Olsson, 1987). Uncertainty in these data stems from the fact that the data base is small and is built on data for artificial saw-cut surfaces. However, the stiffness and coefficient-of-friction values listed fall within the range of measured values for natural fractures in other rocks (Zongqi, 1983).

TABLE 2-5

MECHANICAL PROPERTIES FOR THERMAL/MECHANICAL UNITS OF INTACT ROCK AT YUCCA MOUNTAIN[a]

Thermal/ Mechanical Unit[d]	Young's Modulus (GPa)			Poisson's Ratio			σ_c (MPa)[b]		
	Design Value[c]	Variability Evaluation[c]		Design Value[c]	Variability Evaluation[c]		Design Value[c]	Variability Evaluation[c]	
		Value	Range		Value	Range		Value	Range
TCw	30.8	40.0	±11.1	0.10	0.24	NA[e]	155	240	±163.5
PTn	2.2	3.8	±3.9	0.18	0.16	NA	7	19	±10.9
TSw1[f]	23.9	31.7	±17.9	0.13	0.25	±0.05	114	127	±16
TSw1[g]	15.2	15.5	±3.2	0.16	0.16	±0.03	18	16	±5
TSw2	31.1	30.4	±6.3	0.22	0.24	±0.06	171	166	±65
TSw3	25.0	NA	NA	0.11	NA	NA	46	NA	NA
CHn1v	4.8	7.1	±4.4	0.15	0.16	NA	17	27	±12.4
CHn1z	7.1	7.1	±2.1	0.16	0.16	±0.08	27	27	±9
CHn2z	8.6	11.5	±4.0	0.20	0.16	NA	34	40	±12.7
CHn3z	5.0	7.1	±4.4	0.17	0.16	NA	18	27	±11.0
PPw	12.1	16.3	±7.8	0.20	0.13	NA	51	57	±30.6
CFUn	7.6	7.6	±3.8	0.16	0.16	NA	31	31	±11
BFw	10.8	10.8	±4.7	0.13	0.13	±0.02	42	42	±14
CFMn1	11.5	15.2	±5.2	0.14	0.16	NA	48	52	±19.4
CFMn2	11.9	16.3	±3.4	0.18	0.16	NA	50	57	±13.1
CFMn3	9.9	13.2	±2.7	0.15	0.16	NA	40	45	NA
TRw	17.6	17.6	±3.8	0.18	0.13	NA	72	72	±23

TABLE 2-5

MECHANICAL PROPERTIES FOR THERMAL/MECHANICAL UNITS OF INTACT ROCK AT YUCCA MOUNTAIN[a]
(concluded)

Thermal/ Mechanical Unit[d]	C_o (MPa)[h]			ϕ(°)[i]			Tensile Strength (MPa)		
	Design Value[c]	Variability Evaluation[c]		Design Value[c]	Variability Evaluation[c]		Design Value[c]	Variability Evaluation[c]	
		Value	Range		Value	Range		Value	Range
TCw	45	51.0	±20.26	29.7	44.7	±0.20	17.6	17.9	NA
PTn	3	8.0	±4.18	6.6	8.5	±0.08	1.0	1.0	NA
TSw1[f]	35	36.0	±11.40	27.4	34.9	±0.15	14.6	12.0	±4.6
TSw1[g]	8	11.0	NA	14.3	12.5	NA[e]	1.0	1.0	NA
TSw2	50	34.0	±11.40	29.2	23.5	±0.15	16.9	15.2	NA
TSw3	NA	NA	NA	NA	NA	NA	NA	NA	NA
CHn1v	7	11.0	±4.28	13.4	12.0	±0.08	1.0	1.0	NA
CHn1z	10	10.9	±1.6	15.8	7.6	±2.60	1.0	1.0	NA
CHn2z	12	15.0	±3.33	18.5	16.4	±0.06	3.0	2.6	NA
CHn3z	7	11.0	±3.74	13.7	12.0	±0.07	1.0	1.0	NA
PPw	17	20.0	±7.04	21.4	21.0	±0.12	6.8	6.9	NA
CFUn	11	14.0	±5.51	17.8	15.6	±0.10	2.1	1.8	NA
BFw	14	20.0	±8.21	21.6	21.0	±0.14	7.0	6.9	NA
CFMn1	17	19.0	±5.21	21.0	19.9	±0.09	6.3	6.0	NA
CFMn2	17	20.0	±2.93	21.3	21.0	±0.05	6.7	6.9	NA
CFMn3	14	17.0	±2.83	19.7	18.0	±0.05	4.6	4.3	NA
TRw	23	27.0	±9.11	24.8	27.6	±0.14	11.3	11.1	NA

a. See Appendix O.
b. σ_c = unconfined compressive strength.
c. Design values represent the basis for this SCP-CDR; variability evaluation represents more recent results of data analyses and establishes ranges for properties.
d. Figure 2-6 provides a definition of thermal/mechanical units.
e. NA--not available.
f. Nonlithophysal portions of Unit TSw1.
g. Lithophysal portions of Unit TSw1.
h. C_o = cohesion.
i. ϕ = angle of internal friction.

TABLE 2-6

MECHANICAL PROPERTIES AND MODELING PARAMETERS FOR FRACTURES IN THERMAL/MECHANICAL UNITS AT YUCCA MOUNTAIN[a]

Thermal/ Mechanical Unit[c]	Unstressed Aperture (μm)				Half-Closure Stress (MPa)				Shear Stiffness (MPa/m)				Joint Cohesion (MPa)			
	Design Value[b]	Variability Evaluation[b]			Design Value[b]	Variability Evaluation[b]			Design Value[b]	Variability Evaluation[b]			Design Value[b]	Variability Evaluation[b]		
		UB[d]	RV[e]	LB[f]		UB	RV	LB		UB	RV	LB		UB	RV	LB
TCw	NA[g]	36.0	18.0	3.0	NA	2.0	1.1	0.5	NA	10^7	10^6	10^5	1.0	0.2	0.1	0
PTn	NA	26.0	5.4	5.4	NA	2.8	1.2	1.2	NA	10^7	10^6	10^5	1.0	0.2	0.1	0
TSw1	NA	36.0	18.0	3.0	NA	2.0	1.1	0.5	NA	10^7	10^6	10^5	1.0	0.2	0.1	0
TSw2	NA	36.0	18.0	3.0	NA	2.0	1.1	0.5	NA	10^7	10^6	10^5	1.0	0.2	0.1	0
TSw3	NA	36.0	18.0	3.0	NA	2.0	1.1	0.5	NA	10^7	10^6	10^5	1.0	0.2	0.1	0
CHn1v	NA	26.0	5.4	5.4	NA	2.8	1.2	1.2	NA	10^7	10^6	10^5	1.0	0.2	0.1	0
CHn1z	NA	26.0	5.4	5.4	NA	2.8	1.2	1.2	NA	10^7	10^6	10^5	0.4	0.2	0.1	0
CHn2z	NA	26.0	5.4	5.4	NA	2.8	1.2	1.2	NA	10^7	10^6	10^5	0.4	0.2	0.1	0
CHn3z	NA	26.0	5.4	5.4	NA	2.8	1.2	1.2	NA	10^7	10^6	10^5	0.4	0.2	0.1	0
PPw	NA	36.0	18.0	3.0	NA	2.0	1.1	0.5	NA	10^7	10^6	10^5	1.0	0.7	0.1	0
CFUn	NA	26.0	5.4	5.4	NA	2.8	1.2	1.2	NA	10^7	10^6	10^5	0.4	0.7	0.1	0
BFw	NA	36.0	18.0	3.0	NA	2.0	1.1	0.5	NA	10^7	10^6	10^5	1.0	0.7	0.1	0
CFMn1	NA	26.0	5.4	5.4	NA	2.8	1.2	1.2	NA	10^7	10^6	10^5	0.4	0.7	0.1	0
CFMn2	NA	26.0	5.4	5.4	NA	2.8	1.2	1.2	NA	10^7	10^6	10^5	0.4	0.7	0.1	0
CFMn3	NA	26.0	5.4	5.4	NA	2.8	1.2	1.2	NA	10^7	10^6	10^5	0.4	0.7	0.1	0
TRw	NA	36.0	18.0	3.0	NA	2.0	1.1	0.5	NA	10^7	10^6	10^5	1.0	0.7	0.1	0

TABLE 2-6

MECHANICAL PROPERTIES AND MODELING PARAMETERS FOR FRACTURES IN THERMAL/MECHANICAL UNITS AT YUCCA MOUNTAIN[a]
(concluded)

Thermal/ Mechanical Unit[c]	Friction Coefficient				JCS_o[h]				JRC_o[i]				ϕ_r[j] (°)			
	Design Value[b]	Variability Evaluation[b]			Design Value[b]	Variability Evaluation[b]			Design Value[b]	Variability Evaluation[b]			Design Value[b]	Variability Evaluation[b]		
		UB[d]	RV[e]	LB[f]		UB	RV	LB		UB	RV	LB		UB	RV	LB
TCw	0.80	0.8	0.54	0.2	NA[g]	406.5	243.0	79.5	NA	12	9	6	NA	38.7	28.4	11.3
PTn	0.80	0.8	0.59	0.2	NA	6.8	17.7	28.6	NA	8	5	2	NA	38.7	30.5	11.3
TSw1	0.80	0.8	0.54	0.2	NA	68.5	135.1	201.7	NA	12	9	6	NA	38.7	28.4	11.3
TSw2	0.80	0.8	0.54	0.2	NA	113.0	171.0	229.0	NA	12	9	6	NA	38.7	28.4	11.3
TSw3	0.80	0.8	0.54	0.2	NA	13.0	46.0	79.0	NA	12	9	6	NA	38.7	28.4	11.3
CHn1v	0.80	0.8	0.59	0.2	NA	39.1	26.7	14.3	NA	8	5	2	NA	38.7	30.5	11.3
CHn1z	0.55	0.8	0.54	0.2	NA	36.0	27.0	18.0	NA	8	5	2	NA	38.7	28.4	11.3
CHn2z	0.55	0.8	0.59	0.2	NA	52.6	39.9	27.2	NA	8	5	2	NA	38.7	30.5	11.3
CHn3z	0.55	0.8	0.59	0.2	NA	37.7	26.7	15.7	NA	8	5	2	NA	38.7	30.5	11.3
PPw	0.80	0.8	0.59	0.2	NA	87.6	56.6	26.0	NA	12	9	6	NA	38.7	30.5	11.3
CFUn	0.55	0.8	0.64	0.2	NA	56.0	37.5	19.0	NA	8	5	2	NA	38.7	32.6	11.3
BFw	0.80	0.8	0.59	0.2	NA	56.0	42.0	28.0	NA	12	9	6	NA	38.7	30.5	11.3
CFMn1	0.55	0.8	0.64	0.2	NA	71.9	52.5	33.1	NA	8	5	2	NA	38.7	32.6	11.3
CFMn2	0.55	0.8	0.64	0.2	NA	69.7	56.6	43.5	NA	8	5	2	NA	38.7	32.6	11.3
CFMn3	0.55	0.8	0.64	0.2	NA	NA	45.0	NA	NA	8	5	2	NA	38.7	32.6	11.3
TRw	0.80	0.8	0.59	0.2	NA	96.0	72.0	46.0	NA	12	9	6	NA	38.7	30.5	11.3

a. See Appendix O.
b. Design values represent the basis for the SCP-CDR; variability evaluation values represent more recent results of data analyses and establishes ranges for properties.
c. Figure 2-6 provides a definition of thermal/mechanical units.
d. UB = upper bound.
e. RV = recommended value.
f. LB = lower bound.
g. NA--not available.
h. JCS_o = joint wall compressive strength.
i. JRC_o = joint wall roughness coefficient.
j. ϕ_r = residual friction angle.

Therefore, it is not expected that the results of the design analyses that use these values will change significantly as data on natural fractures are collected. Also, it is generally predicted that slippage along joints will be small and confined to regions very near underground openings (within the influence of proposed ground support). The values of normal stiffness, as determined from the unstressed aperture and half-closure stress (Table 2-6), define the hyperbolic relationship between normal stress and displacement for fractures (Thomas, 1982). The unstressed aperture and half-closure stress values were obtained from the surfaces of natural and artificial fractures.

Some fractures observed are coated or filled. The mechanical properties of these fillings may affect the mechanical response; therefore, the range of shear-stiffness and coefficient-of-friction values listed for use in design sensitivity analyses is large enough to account for this potential uncertainty.

The deformability properties of the rock mass must incorporate the sum of contributed effects from the matrix and fractures (mechanical and geometric characteristics). The reference value of the deformation modulus is chosen to be one-half of the reference value for Young's modulus of the intact rock value (Table 2-5), and the range is given by plus and minus one standard deviation from the mean (Table 2-7). Engineering judgment has been used to select the reference value and range; therefore, a degree of uncertainty is attached to these values. The reference value is, however, supported by field measurements in similar rocks (Zimmerman et al., 1984), which suggests that the deformation modulus for a rock mass is commonly 50% of the value of Young's modulus for intact rock (Zimmerman et al., 1984). The 50% value is high compared with other compiled values of the ratio of the deformation modulus to Young's modulus for intact rock (Heuze, 1980). However, for a given thermal expansion coefficient, induced thermal stress increases proportionately to increases in the deformation modulus.

The reference value and range of the Poisson's ratio of the rock mass is the same as that for intact rock. Field results from the heated block experiment performed in densely welded tuff at G-Tunnel (Zimmerman et al., 1984) support this recommendation. Because field measurement of this parameter at the Yucca Mountain site is lacking, there is uncertainty in the reference value and range presented. However, it is not expected that the design will be significantly affected by minor changes in the Poisson's ratio of the rock mass.

2.3.1.3 Strength Properties

Strength is of fundamental importance to underground design because stability assessments are based on a comparison of stresses predicted through the analyses and the strength criterion considered. The strength criteria are either incorporated in analysis methods or are used to interpret analyses.

The Mohr-Coulomb criterion (Jaeger and Cook, 1969) is currently used to define a strength criterion for intact rock. The linear criterion may

TABLE 2-7

MECHANICAL PROPERTIES OF THE ROCK MASS FOR THERMAL/MECHANICAL UNITS AT YUCCA MOUNTAIN[a]

Thermal/ Mechanical Unit[f]	Deformation Modulus (GPa)			Poisson's Ratio			σ_c (MPa)[b]			C_o (MPa)[c]			ϕ(°)[d]		
	Design Value[e]	Variability Evaluation[e] Value	Variability Evaluation[e] Range	Design Value[e]	Variability Evaluation[e] Value	Variability Evaluation[e] Range	Design Value[e]	Variability Evaluation[e] Value	Variability Evaluation[e] Range	Design Value[e]	Variability Evaluation[e] Value	Variability Evaluation[e] Range	Design Value[e]	Variability Evaluation[e] Value	Variability Evaluation[e] Range
TCw	15.4	20.0	±5.55	0.10	0.10	NA[g]	77.5	120.0	±81.75	22.5	26.0	±10.13	29.7	44.7	±0.20
PTn	1.1	1.9	±1.95	0.18	0.19	NA	3.5	9.5	±5.45	1.6	4.0	±2.09	6.6	8.5	±0.08
TSw1[h]	15.1	15.9	±4.2	0.20	0.22	±0.05	75.0	63.5	±33.30	22.1	18.0	±5.70	29.2	34.9	±0.15
TSw1[i]	7.6	7.6	±3.2	0.16	0.16	±0.05	18.0	16.0	±5.00	7.0	5.5	NA	14.3	12.5	NA
TSw2	15.1	15.2	±4.2	0.20	0.22	±0.05	75.4	83.0	±33.30	22.1	17.8	±5.70	29.2	23.5	±0.15
TSw3	15.1	NA	NA	0.20	NA	NA	75.4	NA	NA	22.1	NA	NA	29.2	NA	NA
CHn1v	2.4	3.6	±2.2	0.15	0.15	NA	8.5	13.5	±6.20	3.4	5.5	±2.14	13.4	12.0	±0.08
CHn1z	3.5	3.6	±2.1	0.17	0.16	±0.08	13.5	13.5	±4.50	5.1	5.4	±1.08	15.8	7.6	±2.60
CHn2z	3.5	5.8	±2.0	0.17	0.20	NA	13.5	20.0	±6.35	5.1	7.5	±1.67	15.8	16.4	±0.06
CHn3z	3.5	3.6	±2.2	0.17	0.18	NA	13.5	13.5	±5.50	5.1	5.5	±1.87	15.8	12.0	±0.07
PPw	6.1	8.2	±3.9	0.20	0.19	NA	25.5	28.5	±15.30	8.5	10.0	±3.52	21.1	21.0	±0.12
CFUn	3.8	3.8	±2.95	0.16	0.16	NA	15.5	15.5	±9.25	5.5	7.0	±2.76	17.8	15.6	±0.10
BFw	5.4	5.4	±2.35	0.13	0.13	±0.02	21.0	21.0	±7.00	7.0	10.0	±4.10	21.6	21.0	±0.14
CFHn1	5.4	7.6	±2.60	0.15	0.14	NA	22.3	26.0	±9.70	7.7	9.9	±2.61	20.5	19.9	±0.09
CFHn2	5.4	8.2	±1.7	0.15	0.17	NA	22.3	28.5	±6.55	7.7	10.0	±1.47	20.5	21.0	±0.05
CFHn3	5.4	6.6	±1.35	0.15	0.15	NA	22.3	22.5	NA	7.7	8.9	±1.42	20.5	18.0	±0.05
TRw	8.8	8.8	±0.10	0.18	0.19	NA	36.0	36.0	±11.50	11.5	13.5	±4.56	24.8	27.6	±0.14

a. See Appendix O.
b. σ_c = unconfined compressive strength.
c. C_o = cohesion.
d. ϕ = angle of internal friction.
e. Design values represent the basis for the SCP-CDR; variability evaluation represents more recent results of data analyses and establishes ranges for properties.
f. Figure 2-6 provides a definition of thermal/mechanical units.
g. NA--not available.
h. Nonlithophysal portions of Unit TSw1.
i. Lithophysal portions of Unit TSw1.

be defined by the unconfined compressive strength and the angle of internal friction (Appendix O). The reference values are the mean determined from available laboratory measurements or from empirical relationships, and the range is given by plus and minus one standard deviation to the mean (Table 2-5). These values were determined through analysis of data collected from approximately 300 samples deformed under a standard set of conditions.

There is no prescribed method for determining a rock-mass strength criterion, nor is there a reliable field test with which rock-mass strength can be measured. It is reasoned that the strength criterion for the rock mass should incorporate the sum of contributions from the intact rock, lithophysal porosity (where present), fractures (mechanical and geometric characteristics), scale effects, and environmental conditions. The strength criterion is meant to provide a working range for the purposes of engineering analysis.

Two approaches were taken simultaneously to assess rock-mass strength. These approaches were either included in analyses or were used to interpret analyses. One approach involved providing an estimate of the strength criterion for "intact" blocks of rock in situ. In this case, a Mohr-Coulomb strength criterion was used. The rock-mass strength was assumed to be 50% of the unconfined compressive strength of the rock matrix (Table 2-7), and the coefficient of friction was assumed to be equal to that of intact rock (Table 2-6). The goal of this assumption was to capture the potential effects of scale, temperature, and time on the strength of intact blocks of rock. The results of the analyses were routinely evaluated to determine whether the strength criterion had been exceeded.

The second approach taken involved providing an estimate of the propensity for slippage along joints. The strength criterion for joints was given by the slippage condition, which is defined by cohesion and friction coefficients (Table 2-6) (Jaeger and Cook, 1969). The cohesion is the shear strength of the fracture at zero normal stress and is assumed to be equal to zero. Although the joint cohesion for two rough surfaces may always have some positive value, a zero value represents a conservative lower bound. The values for joint cohesion in Table 2-6 are derived from laboratory measurements on ground (smooth) surfaces. A cohesion value of zero is a realistic minimum value. The upper bound given is that determined from experimental work. There are not sufficient data on the friction coefficient of real joints to be certain that the upper-bound values in Table 2-6 are representative. However, values for real joints are expected to be greater than for ground surfaces, and the slippage along these joints will be correspondingly less than that determined from these values.

The recommended value for the friction coefficient is derived from data provided by Morrow and Byerlee (1984). The lower value of the range listed for the friction coefficient is a value considered representative for certain clay gouges (Shimamoto and Logan, 1981; Morrow et al., 1982). A very small percentage (on the order of 2%) of the fractures at Yucca Mountain are filled with clay (Spengler and Chornack, 1984). This lower

value of the range chosen is a probable realistic value for these clay-filled fractures. The upper value is set from the range in values listed (Teufel, 1981; Olsson and Jones, 1980; Morrow and Byerlee, 1984) as a result of examining a variation in the environmental test conditions (e.g., effects of rate and temperature). The overall range presented is based on laboratory measurements of the friction coefficient for ground surfaces under various environmental conditions. Uncertainties in the range exist because of the lack of sufficient measurements of real fractures; however, the range presented and considered by design analyses is fairly encompassing for earth materials.

The potential also exists for scale dependence of the fracture slippage parameters (Barton, 1982). These effects and their effect on analysis results are currently being evaluated and will be further studied during site characterization.

Increasing time (rate effects) and increasing temperature act to decrease the strength of intact rock (Paterson, 1978). Increasing time (Dieterich, 1972a, 1972b), decreasing rates (Scholz et al., 1972; Scholz and Engelder, 1976), and increasing temperature (Friedman et al., 1974) all act to increase the coefficient of friction (the shear stress needed to cause sliding on a shear fracture).

The dominant deformation mechanism for intact tuff under repository conditions is fracture (Price, 1983). Because fracture in rock is a time-dependent, thermally activated process (Handin and Carter, 1981), increasing time (decreasing rate) and increasing temperature will both act to "weaken" intact rock. Limited experimental data on tuff at elevated temperatures (Olsson and Jones, 1980; Olsson, 1982; Price, 1983) and low strain rates (Price et al., 1982) are thus far inconclusive in quantifying any potential changes in strength. Data from 15 tests completed to date are inconclusive in quantifying changes. Variations are present not only in temperature but also in other test conditions (pressure, strain, density, and porosity) and in intrinsic rock properties (density and porosity). It is expected that temperatures (less than 200°C) will act to dry out the rock mass, thus strengthening it.

In an attempt to account for potential time effects, most laboratory tests have been performed on fully saturated rocks, thus incorporating potential chemomechanical effects, and a value has been recommended that is half the intact strength. The deformation mechanisms active on stressed fracture surfaces are undoubtedly microfracture and crystal plasticity [which result from the high stress concentrations caused by the relatively low real area of contact (Teufel and Logan, 1978)]. Because these two mechanisms are also time-dependent, thermally activated processes, both increasing time (decreasing rate) and increasing temperature act to facilitate local plastic deformation at point contacts, thus causing an increase in the real area of contact. This phenomenon is manifested in tuff as an increase in the frictional strength (Teufel, 1981).

The above discussion implies that, with increasing time and temperature, the shear strength of fractures will increase while the shear strength of intact rock will decrease; thus, it appears that the range

used in the design analyses is fairly comprehensive and takes into consideration potential environmental effects. Additionally, the discussion implies that time-dependent effects, such as creep, will not be a problem for tuff at the stress and temperature levels predicted for the underground openings of the repository.

The tensile strength of a fractured rock can be locally very close to zero, which is the tensile strength of individual fractures. The tensile strength of the intact rock portion of the rock mass helps define the strength criterion in the vicinity of the origin on the Mohr-Coulomb diagram. The tensile strength of the rock mass is derived from theory and is meant to be used as a modeling parameter rather than to be considered as a material property. The reference value for the tensile strength of intact rock is then reduced to account for potential effects of flaws that will be encountered in larger rock samples or blocks of rocks more representative of the field scale defined by the fracture spacing. The tensile-strength value of the rock mass is determined by the relationship between tensile strength and unconfined compressive strength (modified Griffith criterion) presented by Jaeger and Cook (1969). The range provided is derived from plus or minus one standard deviation from the unconfined compressive strength from which it was determined.

2.3.1.4 Geometric Characteristics of Discontinuities

The geometric characteristics of faults that influence the design include the distribution, offset characteristics, orientation, spacing, length, and width. There is uncertainty associated with extrapolating from the surface expression of faults to obtain a description of their subsurface characteristics. A comprehensive three-dimensional subsurface geologic description of Yucca Mountain (Ortiz et al., 1985) provides a means of combining surface data with borehole data to reduce the uncertainties in this extrapolation. This analysis contributes to an understanding of the interactions of the geometric characteristics of faults with the design (Hustrulid, 1984a). However, this approach does not significantly reduce uncertainties regarding the mechanical properties of fault zones below the surface. Instead, realistic variations of these properties are used in bounding calculations to evaluate their effect on the design (Hustrulid, 1984b). Faults encountered during construction of G-Tunnel, in similar lithologies under similar in situ stress conditions, have not significantly affected the usability of openings or the installation of ground support.

Figure 2-9 shows the field characterization of fractures and joints from these oriented cores (fractures without evidence of shear displacement), which are typical of the site. This characterization includes a map showing the location and trend of known joint sets. For each joint set, the areal distribution, attitude, and frequency are presented. Surface data, combined with subsurface data (Spengler et al., 1981; Maldonado and Koether, 1983; Scott and Castellanos, 1984; Spengler and Chornack, 1984), allow reasonable estimates of the two- and three-dimensional characteristics and the variations of joints and fractures to be determined. The variations in characteristics observed result from the limited sampling (vertical boreholes) available and the fact that many of the fractures

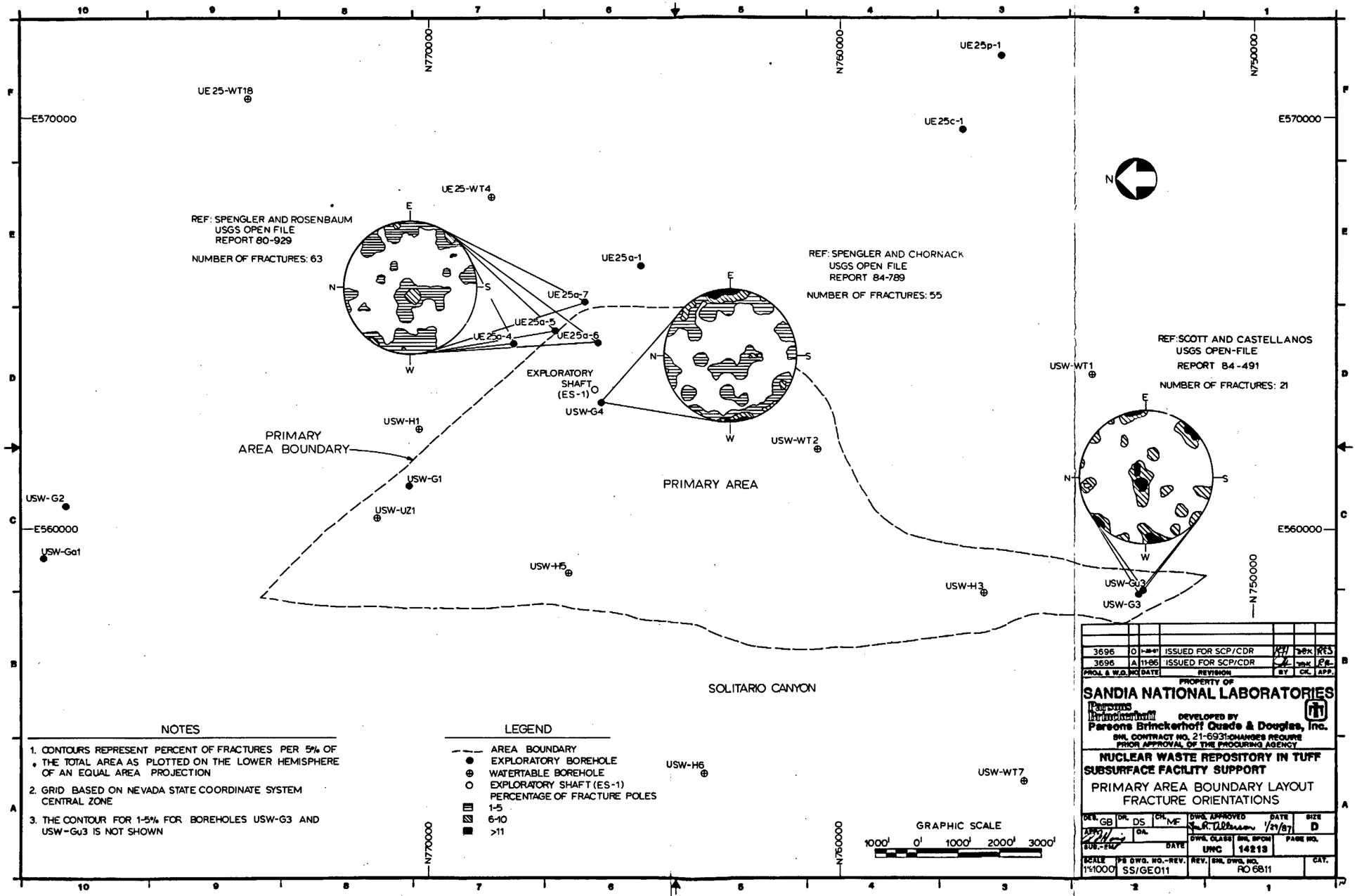
UE25-WT18
UE25p-1
UE25c-1
UE25-WT4
REF: SPENGLER AND ROSENBAUM
USGS OPEN FILE
REPORT 80-929
NUMBER OF FRACTURES: 63
UE25a-1
UE25a-7
UE25a-5
UE25a-4
UE25a-6
REF: SPENGLER AND CHORNACK
USGS OPEN FILE
REPORT 84-789
NUMBER OF FRACTURES: 55
EXPLORATORY
SHAFT
(ES-1)
USW-G4
USW-WT1
REF: SCOTT AND CASTELLANOS
USGS OPEN-FILE
REPORT 84-491
NUMBER OF FRACTURES: 21
USW-H1
PRIMARY
AREA BOUNDARY
USW-G1
USW-UZ1
USW-WT2
PRIMARY AREA
USW-G2
USW-Gu1
USW-H5
USW-H3
USW-Gu3
USW-G3
SOLITARIO CANYON
USW-H6
USW-WT7
N770000
N760000
N750000
E570000
E560000
NOTES
1. CONTOURS REPRESENT PERCENT OF FRACTURES PER 5% OF THE TOTAL AREA AS PLOTTED ON THE LOWER HEMISPHERE OF AN EQUAL AREA PROJECTION
2. GRID BASED ON NEVADA STATE COORDINATE SYSTEM CENTRAL ZONE
3. THE CONTOUR FOR 1-5% FOR BOREHOLES USW-G3 AND USW-Gu3 IS NOT SHOWN
LEGEND
AREA BOUNDARY
EXPLORATORY BOREHOLE
WATERTABLE BOREHOLE
EXPLORATORY SHAFT (ES-1)
PERCENTAGE OF FRACTURE POLES
1-5
6-10
>11
GRAPHIC SCALE
1000' 0' 1000' 2000' 3000'
3696 O 1-28-87 ISSUED FOR SCP/CDR
3696 A 11-86 ISSUED FOR SCP/CDR
PROJ. & W.O. NO. DATE REVISION BY CK. APP.
PROPERTY OF
SANDIA NATIONAL LABORATORIES
Parsons Brinckerhoff
DEVELOPED BY
Parsons Brinckerhoff Quade & Douglas, Inc.
SNL CONTRACT NO. 21-6931-CHANGES REQUIRE PRIOR APPROVAL OF THE PROCURING AGENCY
NUCLEAR WASTE REPOSITORY IN TUFF
SUBSURFACE FACILITY SUPPORT
PRIMARY AREA BOUNDARY LAYOUT
FRACTURE ORIENTATIONS
DES. GB DR. DS CH. MF
DWG. APPROVED
DATE 1/29/87
SIZE D
DWG. CLASS UNC
SNL SPCM 14213
PAGE NO.
SCALE 1"=1000'
PB DWG. NO.-REV. SS/GE011
REV.
SNL DWG. NO. RO6811
CAT.

Figure 2-9.

at the site are nearly vertical (Table 2-8); thus, sampling may be biased. The presence of faults, fractures, and joints has also been considered in the design of the overall layout of the subsurface facilities (Section 6.4.2).

2.3.1.5 Thermal Properties

Thermal properties [thermal expansion coefficient, thermal conductivity, and thermal capacitance (Table 2-9)] are important in determining the changes over time of the thermally induced stresses and displacements that result from emplacement of radioactive waste. Theoretical considerations, coupled with field measurements and analysis (Zimmerman et al., 1984), imply that, in general, thermal properties determined in the laboratory from small samples are directly applicable to the larger-scale behavior of the rock mass.

2.3.1.6 Coefficient of Thermal Expansion

The reference value for the thermal expansion coefficient for the rock mass is given by the mean of measurements for intact samples for selected temperature ranges. Both the reference value and the mean value over the specified temperature range are presented. The coefficient of thermal expansion changes as a result of mineralogical changes that are temperature-dependent. Calculated expansion coefficients are qualitatively consistent with measurements. The uncertainties are not likely to significantly affect the design because of the agreement observed between measured and calculated coefficients. If the variability from sample to sample does not increase during future sampling, this parameter is not expected to differ significantly from the values presented.

2.3.1.7 Thermal Conductivity

The reference value for thermal conductivity of the rock mass is given by the mean of measurements for intact samples, and the range is plus and minus one standard deviation from the mean (Table 2-9). Uncertainties in both the mean and the range for all units are the result of sample-to-sample inhomogeneities. The range considered captures the effect of the sample-to-sample inhomogeneities. For certain thermal/mechanical units indicated in Table 2-9, experimental data are lacking. For these units, the mean and range of units with similar mineralogic and bulk properties are used to derive values of thermal conductivity. In general, these units are either at some distance from the emplacement horizon or are not volumetrically significant in terms of accommodating mechanical and/or thermal/mechanical loads. Thus, use of these derived conductivity values is considered legitimate for the far-field analyses. Further, variations in thermal conductivity for these distant, volumetrically insignificant units would not lead to conclusions different from those drawn from far-field analyses.

2.3.1.8 Thermal Capacitance

The reference value for thermal capacitance for the rock mass is assumed to be the mean of values calculated for intact samples, and the range presented is plus and minus one standard deviation from the mean

TABLE 2-8

RECOMMENDED VALUES FOR FRACTURE FREQUENCY IN THERMAL/MECHANICAL UNITS AT YUCCA MOUNTAIN[a,b]

Thermal/ Mechanical Unit[c]	Fracture Frequency (fractures/m) at 10° Intervals of Angles of Inclination																	
	0°-10°		10°-20°		20°-30°		30°-40°		40°-50°		50°-60°		60°-70°		70°-80°		80°-90°	
TCw[d]	0.40[e]	0.90[f] 0.05[g]	0.80	1.90 0.09	0.50	1.00 0.05	0.50	1.00 0.05	0.40	0.60 0.10	0.50	0.90 0.20	1.20	2.00 0.70	2.1	2.80 1.20	15.7	28.0 1.9
PTn	0.20	NA[h] NA	0.30	NA NA	0.20	NA NA	0.10	NA NA	0.20	NA NA	0.10	NA NA	0.40	NA NA	0.3	NA NA	2.8	NA NA
TSw1[d,i]	0.20	0.50 0.05	0.20	0.60 0.05	0.20	0.60 0.05	0.10	0.30 0.05	0.20	0.40 0.05	0.20	0.50 0.05	0.30	0.70 0.10	1.7	2.60 0.70	13.2	32.5 2.5
TSw2[d,i]	0.20	0.50 0.05	0.20	0.60 0.05	0.20	0.60 0.05	0.10	0.30 0.05	0.20	0.40 0.05	0.20	0.50 0.05	0.30	0.70 0.10	1.7	2.60 0.70	13.2	32.5 2.5
TSw3[d,i]	0.20	0.50 0.05	0.20	0.60 0.05	0.20	0.60 0.05	0.10	0.30 0.05	0.20	0.40 0.05	0.20	0.50 0.05	0.30	0.70 0.10	1.7	2.60 0.70	13.2	32.5 2.5
CHn1v[d]	0.05	0.05 0.05	0.05	0.05 0.05	0.05	0.05 0.05	0.05	0.05 0.05	0.05	0.05 0.05	0.05	0.05 0.05	0.08	0.09 0.05	0.5	1.50 0.05	0.8	1.2 0.1
CHn1z[d]	0.05	0.05 0.05	0.05	0.05 0.05	0.05	0.05 0.05	0.05	0.05 0.05	0.05	0.05 0.05	0.05	0.05 0.05	0.08	0.09 0.05	0.5	1.50 0.05	0.8	1.2 0.1
CHn2[d]	0.05	0.05 0.05	0.05	0.05 0.05	0.05	0.05 0.05	0.05	0.05 0.05	0.05	0.05 0.05	0.05	0.05 0.05	0.08	0.09 0.05	0.5	1.50 0.05	0.8	1.2 0.1
CHn3[d]	0.05	0.05 0.05	0.05	0.05 0.05	0.05	0.05 0.05	0.05	0.05 0.05	0.05	0.05 0.05	0.05	0.05 0.05	0.08	0.09 0.05	0.5	1.50 0.05	0.8	1.2 0.1
PPw[d]	0.05	0.05 0.05	0.10	0.20 0.05	0.08	0.10 0.05	0.10	0.20 0.05	0.08	0.10 0.05	0.10	0.20 0.05	0.30	0.50 0.05	0.6	0.70 0.50	1.0	1.7 0.2
CFUn	0.05	NA NA	0.05	NA NA	0.05	NA NA	0.05	NA NA	0.05	NA NA	0.05	NA NA	0.10	NA NA	0.1	NA NA	0.4	NA NA
BFw[d]	0.05	0.05 0.05	0.05	0.05 0.05	0.05	0.05 0.05	0.05	0.06 0.05	0.20	0.40 0.05	0.30	0.50 0.05	0.60	1.30 0.05	1.4	3.80 0.10	6.5	18.9 0.2
CFMn1	0.05	NA NA	0.05	NA NA	0.05	NA NA	0.05	NA NA	0.05	NA NA	0.50	NA NA	0.05	NA NA	0.1	NA NA	0.4	NA NA
CFMn2	0.05	NA NA	0.05	NA NA	0.05	NA NA	0.05	NA NA	0.05	NA NA	0.50	NA NA	0.05	NA NA	0.1	NA NA	0.4	NA NA
CFMn3	0.05	NA NA	0.05	NA NA	0.05	NA NA	0.05	NA NA	0.05	NA NA	0.50	NA NA	0.05	NA NA	0.1	NA NA	0.4	NA NA
TRw[d]	0.07	0.09 0.05	0.06	0.06 0.05	0.05	0.06 0.05	0.05	0.05 0.05	0.05	0.05 0.05	0.05	0.05 0.05	0.30	0.50 0.05	0.2	0.20 0.20	3.9	7.0 0.7

a. See Appendix O. No specific design value was used at the onset of the conceptual design.
b. Fracture frequencies in this table were calculated as the average (arithmetic mean) of values from the four drillholes for which information is available. A mean value and a range are presented only for those units represented in at least two of the drillholes of Table 6 of Appendix O. Degrees are measured downward from the horizontal.
c. Figure 2-6 provides a definition of thermal/mechanical units.
d. Represented in at least two drillholes.
e. Mean value.
f. Upper bound.
g. Lower bound.
h. NA--not available.
i. Units TSw1, TSw2, and TSw3 are assumed to have the same fracture frequencies for this table.

TABLE 2-9

THERMAL PROPERTIES OF INTACT ROCK AND THE ROCK MASS[a]

Therm. Mech. Unit[d]	Thermal Conductivity (W/m K)						Coefficient of Thermal Expansion (10^{-6} K^{-1})									Thermal Capacitance (J/cm^3K)			
	Saturated[b]			Dry			Pretransition			Transition			Posttransition			Saturated[b]		Dry	
	Design Value[c]	Var. Eval.[c] Mean	Var. Eval.[c] Range	Design Value[c]	Var. Eval.[c] Mean	Var. Eval.[c] Range	Design Value[c]	Var. Eval.[c] Mean	Var. Eval.[c] T(°C)	Design Value[c]	Var. Eval.[c] Mean	Var. Eval.[c] T(°C)	Design Value[c]	Var. Eval.[c] Mean	Var. Eval.[c] T(°C)	Design Value[c]	Var. Eval. Value[c]	Design Value[c]	Var. Eval. Value[c]
TCw	2.00	2.03[e]	0.20[e]	1.90	1.76[e]	0.29[e]	10.7	8.8[e]	25-200[e]	NA[f]	NA	NA	NA	NA	NA	2.24	2.18	1.86	1.88
PTn	1.17	1.35	0.06	1.02	1.02	0.19	5.0	5.3[g]	25-150[g]	5.0	3.5	150-350	NA	NA	NA	2.59	2.24	1.09	1.09
TSw1[h]	2.07	2.03	0.20	1.91	1.76	0.29	10.7	8.8[e]	25-200[e]	31.8	31.8	200-350	NA	NA	NA	2.25	2.09	1.88	1.98
TSw1[i]	1.16	1.96	0.41	0.85	1.21	0.14	10.7	NA	25-200	31.8	NA	NA	NA	NA	NA	1.88	1.87[j]	1.38	1.38[j]
TSw2	2.07	2.29	0.17	1.91	1.88	0.24	10.7	8.8	25-200	31.8	24.0	200-350	NA	NA	NA	2.25	2.16	1.88	2.17
TSw3	2.07	1.34	0.10	1.91	1.40	0.16	10.7	5.3	25-150	31.8	3.5	150-250	NA	NA	NA	2.25	2.04	1.88	2.45
CHn1v	1.21	1.35	0.06	1.02	1.02	0.19	5.0	5.3[g]	25-150[g]	5.0[g]	3.5[g]	150-250[g]	NA	NA	NA	2.46	2.61	1.24	1.26
CHn1z	1.35	1.48	0.17	1.03	1.01	0.14	6.7	6.7	25-T_b	-56.0	-56.0	T_b-150	-4.5	-4.5	150-300	2.46	2.61	1.37	1.36
CHn2	1.35	1.61	0.04	1.03	1.21	0.04	6.7	6.7[k]	25-T_b[k]	-56.0	-56.0[k]	T_b-150[k]	-4.5	-4.5[k]	150-300[k]	2.46	2.62	1.37	1.51
CHn3	1.35	1.43[l]	0.03[l]	1.03	1.04[l]	0.05[l]	6.7	6.7[k]	25-T_b[k]	-56.0	-56.0[k]	T_b-150[k]	-4.5	-4.5[k]	150-300[k]	2.46	2.64	1.37	1.30
PPw	2.00	2.00[m]	0.27[m]	1.35	1.35[m]	0.30[m]	8.3	8.3[m]	25-T_b[m]	-12.0	-12.0[m]	T_b-125[m]	10.9	10.9[m]	>125[m]	2.64	2.65	1.64	1.65
CFUn	1.43	1.43	0.03	1.04	1.04	0.05	6.7	6.7[k]	25-T_b[k]	-56.0	-56.0[k]	T_b-150[k]	-4.5	-4.5[k]	150-300[k]	2.67	2.68	1.43	1.43
BPw	2.00	2.00	0.27	1.35	1.35	0.30	8.3	8.3	25-T_b	-12.0	-12.0	T_b-125	10.9	10.9	>125	2.65	2.66	1.66	1.66
CFHn1	1.48	1.43	0.00	1.13	1.11	0.07	6.7	6.7[k]	25-T_b[k]	-56.0	-56.0[k]	T_b-150[k]	-4.5	-4.5[k]	150-300[k]	2.59	2.56	1.53	1.52
CFHn2	1.48	1.61[n]	0.04[n]	1.13	1.21[n]	0.04[n]	6.7	6.7[k]	25-T_b[k]	-56.0	-56.0[k]	T_b-150[k]	-4.5	-4.5[k]	150-300[k]	2.59	2.61	1.53	1.61
CFHn3	1.48	1.46	NA	1.13	1.11	NA	6.7	6.7[k]	25-T_b[k]	-56.0	-56.0[k]	T_b-150[k]	-4.5	-4.5[k]	150-300[k]	2.59	2.62	1.53	1.50
TRw	2.09	2.09	0.18	1.79	1.79	0.37	8.3	8.3[m]	25-T_b[m]	-12.0	-12.0[m]	T_b-125[m]	10.9	10.9[m]	>125[m]	2.57	2.58	1.79	1.79

a. See Appendix O.
b. Thermal conductivity data for all units and thermal capacitance data for PPw and underlying units are for a nominal saturation of 1.0, whereas thermal capacitance data for CHn3 and overlying units are calculated using saturations from Montazer and Wilson (1984).
c. Design values represent the basis for this SCP-CDR; variability evaluation represents more recent results of data analyses and establishes ranges for properties.
d. Figure 2-6 provides a definition of thermal/mechanical units.
e. Assumed to be the same as correlative property for Unit TSw1.
f. NA--not available.
g. Assumed to be the same as correlative property for TSw3.
h. Nonlithophysal layers in Unit TSw1.
i. Lithophysal layers in Unit TSw1.
j. For lithophysal layers, the total porosity is $\phi_m \cdot M + \phi_A \cdot A + \phi_L$, where ϕ_m is matrix porosity, ϕ_A is the porosity of vapor-phase-altered material, ϕ_L is the volume fraction lithophysal cavities, and M and A are volume fractions of matrix and vapor-phase-altered material, respectively (Price et al., 1985).
k. Assumed to be the same as correlative property for CHn1z.
l. Assumed to be the same as correlative property for CFUn.
m. Assumed to be the same as correlative property for BPw.
n. Assumed to be the same as correlative property for CHn2.
T_b = boiling temperature of pore water.

(Table 2-9). No measurements of specific heat or heat capacity have yet been made on tuffs as part of the NNWSI Project. For this Site Characterization Plan Conceptual Design Report (SCP-CDR), these parameters were calculated with acceptable accuracy (±20%) under most conditions, assuming a constant heat capacity for the silicate mineral assemblage of 0.84 J/g°C, water heat capacity of 4.18 J/g°C, and air heat capacity of zero (Nimick and Schwartz, 1987). Calculated values of the thermal capacitance (heat capacity/density product) (Table 2-9) show a range that depends both on porosity and degree of saturation. In light of reasonable variations in both the porosity and degree of saturation, the uncertainty in the range considered is small.

2.3.1.9 In Situ Stress and Temperature

Measurement of in situ stress using hydraulic fracturing techniques in Drillholes USW G-1, USW G-2, and USW G-3 (Stock et al., 1984 and 1985) shows that the horizontal stresses are less than the vertical stresses at Yucca Mountain. These three boreholes are in the main part of Yucca Mountain and are situated along the proposed boundary of the underground facility.

Table 2-10 contains the mean values and ranges of currently available data pertaining to principal stresses at Yucca Mountain. These values will be refined as more data become available.

TABLE 2-10

MEAN VALUES AND RANGES FOR PRINCIPAL STRESSES AT YUCCA MOUNTAIN

Parameter	Mean Value*	Range
Vertical Stress (MPa)	7.0	5.0 to 10.0
Ratio of Minimum Horizontal Stress to Vertical Stress	0.5	0.3 to 0.8
Ratio of Maximum Horizontal Stress to Vertical Stress	0.6	0.3 to 1.0
Bearing of Minimum Horizontal Stress	N57°W	N50°W to N65°W
Bearing of Maximum Horizontal Stress	N32°E	N25°E to N40°E

*Average value for a depth of approximately 300 m.

In situ rock temperatures reported by Sass and Lachenbruch (1982) have been measured in drillholes at Yucca Mountain. Drillholes USW G-1,

USW G-2, USW H-1, and UE-25a#1 give a range of 23 to 29°C and an average value of 26°C, based on the observed temperature gradients for the range of expected depths (200 to 500 m) in the emplacement area.

2.3.2 Climate and Weather

Several types of meteorological conditions at the site affect the design of the surface and subsurface facilities. Extreme wind speeds affect the structural design of the surface facilities. In addition, certain facilities needed for radiological safety may have to be protected from tornadoes and tornado-generated missiles. Rainfall intensities affect the design of the drainage features that protect the surface facilities and underground openings (shaft collars and ramp portals) from flooding. Temperature and humidity affect the design of heating, ventilating, and air-conditioning (HVAC) systems provided for the surface and subsurface facilities.

2.3.2.1 Sources of Meteorological Data

Site-specific meteorological data, data for the NTS, and design parameters from certain codes and standards are the primary sources of meteorological data used in the design of the facilities. The historical meteorological data available have been compiled by Eglinton and Dreicer (1984). In addition, two 30-ft meteorological towers were installed at the site in 1982: one on the ridge of Yucca Mountain (identified as YR) and the other on the alluvial soil in the vicinity of the major surface facilities (identified as YA). Data for the site were collected at these towers from July 1982 to June 1983 (Church et al., 1984). These new data include information about precipitation, lightning, temperature, relative humidity, solar radiation, cloud cover, wind, and air pressure. Both historical and recent information has been used for the layout and design of the repository facilities. Meteorological data will affect the design most during the later stages of the detailed design.

2.3.2.2 Meteorological Parameters for Design

The design parameters identified below are considered the most important for the design of the facilities. These parameters may be modified or expanded periodically as additional data are acquired or for other reasons.

2.3.2.2.1 Wind Direction and Average Speed

The direction of the prevailing regional wind in the vicinity of Yucca Mountain is predominantly southerly in spring and summer and northerly in fall and winter. A second significant feature of wind direction, typical of all months, is that the local wind pattern is diurnal: at night, winds are northerly and downslope and during the day they are southerly and upslope. Although the meteorological data from the YA site cover only a limited period (Eglinton and Dreicer, 1984), the YA data, particularly for wind direction, are used to the maximum extent possible because the local topography exerts a significant effect on wind direction. Additional data for the YA site, including wind roses, are provided by Church et al. (1984). Data on wind direction and speed have been considered for the facility layout.

2.3.2.2.2 Maximum Wind Speeds

In accordance with ANSI A58.1 (1982), the basic wind speed of 80 mph with a 100-yr recurrence interval is used for the design of surface structures. This basic wind speed applies to the central Nevada area and is appropriate for the design of surface facilities. Tornado wind speeds are described in Section 2.3.3.2. These wind speeds determined wind pressure for the structural design of the repository buildings.

2.3.2.2.3 Precipitation

Precipitation at the NTS is light throughout the year, averaging less than 8 in. annually. Approximately 50% of annual precipitation generally occurs between November and February. Winter storms produce most of the annual precipitation; summer storms produce the highest precipitation rates and the greatest accumulation per storm. Summer thunderstorms can cause flash floods.

Design of protection and drainage systems at the repository requires information on probable maximum amounts of precipitation and rainfall intensities. Probable maximum precipitation (PMP) amounts are based on data provided by the National Weather Service (1977). The PMP is used in determining the PMF in accordance with ANSI/ANS-2.8 (1981) (Section 2.3.3.3). The design of the flood protection and drainage systems should accommodate the PMF. Representative data on temperature and humidity are presented in Table 2-11. Rainfall intensities for return periods up to 100 yr are determined based on data provided by the National Weather Service (1974) and by Eglinton and Dreicer (1984). These intensities are used for drainage design at facilities that do not require protection from the PMF.

TABLE 2-11

TEMPERATURE AND HUMIDITY DATA FOR YUCCA MOUNTAIN

	Dry-Bulb Temperature (°C)	Wet-Bulb Temperature (°C)	Relative Humidity (%)
Summer Mean[a]	30.3	15.2	20.18
Winter Mean[a]	7.5	4.0	b
Summer Maximum[c]	42.2	21.7	15
Winter Minimum[c]	-6.7	d	b

a. Eglinton and Dreicer (1984).
b. The relative humidity does not affect the design in the winter.
c. Based on information for the vicinity of Las Vegas, Nevada (ASHRAE, 1985, Chapter 24).
d. The wet-bulb temperature for the winter minimum is not applicable; the temperature is below the freezing point of water.

2.3.2.2.4 Temperature and Humidity

Characteristic of a midlatitude arid climate, the annual and daily temperature ranges are wide, reflecting the influence of continental air masses and the lack of moisture. The wide range in daily temperature occurs because clear skies and the lack of moisture in the air allow maximum penetration of solar energy to the surface, causing intense heating on the bare, dry ground. At night, the same conditions permit rapid cooling. Local topographical and physical differences determine the ranges. Because the presence of water helps to reduce extremes in temperature and because summer is the season of lowest humidity and cloud cover, daily temperature ranges are greater in summer than in winter. The design parameters for air-conditioning criteria are listed in Table 2-11. These parameters have been used in the design of the HVAC systems for the surface facilities.

2.3.3 Natural and Human-Induced Phenomena

The repository facilities are designed and constructed to prevent the failure of structures, systems, and components important to safety. Failure could result from natural forces and human-induced phenomena. Natural phenomena include earthquakes, wind, tornadoes, and floods; the human-induced phenomenon considered is an underground nuclear explosion (UNE). More detail on identification of these phenomena is presented in Appendix F.

2.3.3.1 Ground Motion

The evaluation of ground motion at the Yucca Mountain site during the preclosure period must address two types of seismic events: (1) natural seismicity (earthquakes) and (2) UNEs, which are conducted periodically at the NTS. The seismic design assumption is that 0.4 g is the vibratory ground motion input. This value is based on information contained in current project documents (USGS, 1984; DOE, 1986b; URS/Blume, 1986) and seismologic and engineering judgment. As discussed below, this value may be increased as a result of ongoing studies, particularly to characterize faults within about 5 km of the site, and these revised values will be used for future design analyses. A more detailed discussion of the understanding of seismic hazard at the site can be found in SCP Section 1.4. This design criterion does not account for any potential surface rupture offsets on the faults in the vicinity of the site. The design value of 0.4 g envelops the maximum ground acceleration expected from ground motion induced by a maximum-yield UNE (700 kt) at the NTS, which is equal to 0.32 g, based on a mean value plus three standard deviations (DOE, 1986b). This design value allows for potential rock fatigue caused by repetitive occurrences and will be evaluated further during site characterization.

The seismic characteristics of Yucca Mountain are evaluated in two reports. In the first report (URS/Blume, 1986), the approach was to establish a seismogenic zoning of the site region based on the history of the seismic events, late Quaternary strain rates, and the mode of later

Cenozoic deformation so that the ground motion hazard in the site region could be predicted.

An occurrence model for UNEs was also established in the URS/Blume report, using historical data of NTS testing that occurred before the Threshold Test Ban Treaty, which establishes a testing limit of 150 kt. It was assumed that future testing would occur in the Buckboard Mesa area because Buckboard Mesa is the location closest to the repository site that is available for testing. This area, which is approximately 15 mi from the repository site, is closer to the repository site than any of the locations on the NTS where testing has occurred to date. A maximum yield of 700 kt was established for a UNE at Buckboard Mesa, based on the potential damage that a detonation that size would cause to the area surrounding the point of detonation. The current testing limit of 150 kt produces negligible ground motion at the repository site.

The ground motions calculated by URS/Blume (1986) are (1) an acceleration value of 0.4 g with a return period of 2,000 yr for natural earthquakes and (2) an acceleration value of 0.15 g, based on the mean plus two standard deviations for UNEs (Table 2-12). This value for UNEs is considered more realistic, for design purposes, than the maximum value of 0.32 g cited above (DOE, 1986b).

TABLE 2-12

PEAK GROUND ACCELERATIONS AT THE SURFACE

Seismic Event	Acceleration (g)[a] Horizontal	Acceleration (g)[a] Vertical	Return Period (yr)
Design Earthquake	0.40	0.27	2,000[a]
Design Underground Nuclear Explosion (DUNE)	0.15	0.18	2,000[b]

a. URS/Blume (1985).
b. The probability that the DUNE will not be exceeded is 95%.

As part of a seismic/tectonic evaluation being conducted by the NNWSI Project, significant efforts are under way to develop methods that predict maximum ground motion values and potential fault displacements resulting from natural seismicity at the site. These predictions will be used in the ACD phase. This effort will also identify important information needs that will be generated as a part of the site characterization program to validate the seismic design parameters.

The second report that evaluates the seismic characteristics of Yucca Mountain (URS/Blume, 1987) is part of the NNWSI Project seismic evaluation. Fault-specific models of random earthquake occurrence have

been developed to predict the hazard caused by ground motion and displacements on faults in the vicinity of the site. Earthquake occurrence was determined from published fault-length and slip-rate information. The faults considered include Bow Ridge Fault, Paintbrush Canyon Fault, Ghost Dance Fault, Midway Valley Fault, and Sever Wash Fault (Figure 2-5).

The URS/Blume report indicates that the design ground motion for the repository facilities may be in the 0.4- to 0.5-g range, depending on the return period to be considered. The report also indicates that the probability is extremely small that any significant surface offsets on the faults will occur during the preclosure period. Technology exists for designing surface facilities for the design accelerations described above; typical examples include the Diablo Canyon and San Onofre nuclear power plants. Published literature shows that structures can be designed to resist moderate surface displacement before any catastrophic failure could occur (Reed et al., 1979).

SCP Section 8.3.1.17 identifies the information necessary to generate site data. The data will be used to develop the design basis in the next phase of design and to validate the studies described above. Data generated in the SCP may lead to changes in the design basis described in this report.

It is provisionally assumed that the peak accelerations at the emplacement level are half those at the surface. This assumption is based on a conservative estimate of attenuation of ground motion with depth derived from UNE test data and other published information on earthquakes (URS/Blume, 1986; Carpenter and Chung, 1986). Further investigation and data gathering during the site characterization program and the development of a satisfactory model for surface and subsurface data may result in revised estimates of peak accelerations.

Carpenter and Chung (1986) indicate that no drift collapses can be ascribed to shaking alone up to surface-shaking levels of 0.5 g. Drifts in poor soil and rock are more susceptible to damage than are drifts deep in rock. Damage to all classes of deep tunnels consists primarily of minor rockfalls and formation of new cracks, except where active faults intersect drifts. In these cases, although severe damage occurred, the damage is very localized and is readily repaired using existing technology (Carpenter and Chung, 1986); hence, use of current technology permits designing underground facilities that can withstand the levels of acceleration described above. The topic of emplacement borehole stability during a seismic event was not addressed as part of the conceptual design for the SCP. This topic will be addressed in future design activities after the impacts, if any, of borehole collapse on containment, isolation, and retrievability have been assessed.

2.3.3.2 Wind and Tornadoes

All structures, systems, and components that are important to safety and that may be exposed to tornadoes are designed to withstand tornado loads with the characteristics of the design-basis tornado described in Table 2-13 and tornado-generated missiles in Table 2-14. The maximum wind

TABLE 2-13

TORNADO CHARACTERISTICS*

Maximum Tornado Wind Speed	180 mph
Translational Wind Speed	40 mph
Maximum Tangential Wind Speed	140 mph
Radius of Maximum Tangential Wind Speed	320 ft
Maximum Atmospheric Pressure Drop	0.7 psi
Probability of Occurrence	10^{-7}/yr

*Source: ANSI/ANS-2.3 (1983).

TABLE 2-14

DESIGN SPECTRUM OF MISSILE VELOCITIES[a]

Missile	Weight (lb)	Velocity, Altitude, and Range[b]	
Automobile	4,000	Maximum horizontal velocity	65 mph
		Maximum altitude	15 ft
		Maximum range	450 ft
Wide-Flange Beam (14 in. wide, 30 lb per lineal foot, or equivalent)	750	Maximum horizontal velocity	45 mph
		Maximum altitude	10 ft
		Maximum range	180 ft

a. ANSI/ANS-2.3 (1983).
b. Based on tornado wind velocity of 180 mph.

speed of the design tornado is 180 mph. The basic wind speed of 80 mph given in Section 2.3.2.2.2 is used for the design of all surface structures, systems, and components not important to safety. More detailed information is provided in Appendix H.

2.3.3.3 Floods

Because of the rugged terrain and meteorological conditions at the Yucca Mountain site, local intense flooding occurs periodically in the normally dry washes that drain the Yucca Mountain ridge. Flood conditions at the site are described in Section 2.2.6. The impact of the PMF is discussed in Section 7.1.2.2. Surface and subsurface facilities important to safety are protected from the PMF levels determined in accordance with ANSI/ANS-2.8 (1981).

2.4 Design Requirements

Two primary documents control the design requirements for the Yucca Mountain MGDS--the SR and the SDR. Both documents have been issued in draft form and are provided in Appendix P of this report. Together the two documents define the functional and physical requirements for the design of the repository. This section highlights important requirements that form the basis of this report. Section 2.6 summarizes important regulatory requirements pertaining to the design of the repository.

2.4.1 Derivation of Repository Design Requirements

2.4.1.1 Program Requirements

Figure ES-2 is a simplified representation of how the design requirements of a repository evolve from federal laws and regulations. Program requirements, which are generic and apply to all MGDSs regardless of the host medium, have been derived from statutory and regulatory requirements--the NWPA, 40 CFR 191 (EPA, 1986b), 10 CFR 60 (NRC, 1986b), 10 CFR 960 (DOE, 1986a), 10 CFR 20 (NRC, 1986a), and other requirements, including the Mission Plan (DOE, 1985a), waste management systems requirements and descriptions document (DOE, 1986e), and DOE orders and regulations (Section 2.6.3). The Mission Plan explicitly defines the mission of the repository and the requirements for its performance; states the broad basis for anticipating the kinds of scientific, engineering, and environmental information required for a repository; and identifies a hierarchy of unresolved questions. These unresolved questions are stated in a list of key issues, issues, and information needs important to the repository design identified in Chapter 8.

In addition to these requirements, the DOE's Office of Geologic Repositories (OGR) has developed generic requirements (DOE, 1984b) from regulations that apply to all repositories regardless of the host medium selected.

2.4.1.2 Project Level Requirements

At the project level, each project (those for salt, basalt, and tuff) determines how the generic requirements can be met, taking site-specific conditions into account. The SR contains a functional description of the structure of the NNWSI MGDS, organized by system, and explicitly prescribes the functional requirements and performance criteria to be satisfied. The MGDS consists of the waste package, repository, and site subsystems before closure, and the engineered, natural, and institutional barrier subsystems after closure. The SR also relates legislative, regulatory, and programmatic source requirements to pertinent repository functions and will, in future revisions, as a living document, provide a correlation for the issues identified in the Mission Plan to the requirements imposed on the Yucca Mountain MGDS.

2.4.1.3 Design Level Requirements

The evolution of repository design requirements is shown in Figure ES-2. At the design level, detailed design criteria and engineering

guidance have been developed for all the facilities in the MGDS in conjunction with the requirements set forth at the project and program levels. These criteria were compiled as draft conceptual design guidelines and were used to initiate the development of the conceptual design. During the review and comment resolution process, new guidance was received from the DOE, and a draft conceptual design guidelines document was reorganized and reformatted to be published as the SDR (Appendix P). To support future design phases, the SDR will be retitled "Repository Design Requirements," and its scope will be limited to the repository. A companion Waste Package Design Requirements document will also be developed.

The SDR provides the design criteria used to develop the repository design in conjunction with the requirements set forth in the SR. The design criteria include definitions of project scope; legal and functional requirements; site information; design parameters; and applicable codes, standards, and regulations. The SDR specifically addresses the physical systems that compose the repository. These systems include the equipment, seals, site preparations, surface facilities, shafts and ramps, underground facilities, and underground service systems. Guidance is provided on certain nonphysical systems (e.g., operations and maintenance, permanent closure, repository performance assessment, and design analysis) that constrain the design of the physical systems.

The SDR has acted as a control for the design presented in this report and also includes the criteria changes that have been enacted throughout the course of the design.

2.4.2 Functional Design Requirements for the Repository Facilities

In addition to the regulatory requirements described in Section 2.6, the DOE has established directives that apply to a repository. These directives consist of (1) guidance and policy issued by the OGR for geologic disposal of radioactive waste and (2) requirements in the form of DOE Orders that apply generally to all DOE projects and are written to establish policy and procedures for DOE activities. These directives are summarized in Table 2-15.

From these DOE directives, the functional requirements and specific guidance for the repository have been developed. Functional requirements are primary statements of purpose and definitions of what repository systems and subsystems must accomplish. The basic functions of the Yucca Mountain repository are to receive, prepare, and permanently isolate and contain spent nuclear fuel and other high-level wastes. The functional requirements for the repository are summarized in Table 2-16. Functional requirements for the performance confirmation and closure phases are listed in Table 2-17. Design requirements for natural phenomena are contained in Table 2-18. Functional requirements for retrieval are identified in Section 2.4.4.2.

2.4.3 Radiological Exposures to the Public

The repository and its support facilities will go through the phases of site characterization, construction, and operations. At each phase, steps will be taken to protect the quality of the environment and to mitigate any significant environmental impacts.

TABLE 2-15

DEPARTMENT OF ENERGY DIRECTIVES APPLICABLE TO A REPOSITORY FOR HIGH-LEVEL RADIOACTIVE WASTE

Directive	Description	Requirements
Mission Plan for the Civilian Radioactive Waste Management Program (DOE, 1985a)	Using governing regulations, explicitly defines the mission of the repository and the requirements for its performance. States the broad basis for anticipating the kinds of scientific, engineering, and environmental information required for a repository. Identifies a hierarchy of unresolved questions for which information can be collected to provide answers.	Requires a very thorough subsurface exploration program to ensure that the natural barriers of the site provide waste isolation. Requires development of a two-stage repository design.
Generic Requirements for a Mined Geologic Disposal System (GR) (DOE, 1984b)	Contains a functional description of the generic structure of an MGDS and explicitly prescribes the minimum set of functional requirements and performance criteria to be satisfied. Organized by systems, the MGDS is subdivided into the waste package, repository, and site subsystems during preclosure and into engineered, natural, and institutional barrier subsystems after closure.	Reconfirms the federal regulatory requirements, including the requirement that any or all of the emplaced waste be retrievable in about the same length of time as that devoted to construction and emplacement, starting at any time up to 50 yr after emplacement operations are initiated. Compiles DOE Orders applicable to specific subsystems and components.
DOE Order 6410.1, "Management of Construction Projects" (DOE, 1983b)	Establishes policies and procedures to be followed during the planning and execution of DOE construction programs and projects. Includes an outline of the fundamental objectives of conceptual design and describes the content of a conceptual design report.	Establishes a framework to ensure that planning, design, and construction of DOE facilities are properly managed.
DOE Order 6430.1, "General Design Criteria" (DOE, 1983c)	Provides the general criteria for the conceptual design of the repository. Includes references to the codes, standards, guides, DOE Orders, and other directives that are to be followed.	Provides general design criteria that ensure implementation of DOE policy covering • the basic architectural and engineering disciplines, • certain types of known DOE facility requirements, and • specialized requirements based on programmatic and operating experience.

TABLE 2-15

DEPARTMENT OF ENERGY DIRECTIVES APPLICABLE TO A REPOSITORY FOR HIGH-LEVEL RADIOACTIVE WASTE
(concluded)

Directive	Description	Requirements
DOE Order 4320.1A, "Site Development and Facility Utilization Planning" (DOE, 1983a)	Establishes policies and procedures for the site development and facility utilization planning of real property at sites owned, leased, or controlled by DOE for production, separation, research, development, or demonstration.	Requires production of a "Site Development and Facility Utilization Plan" to encompass projected programmatic needs or other activity projections within financial, physical, or other imposed constraints.
DOE Order 5440.1B, "Implementation of the National Environmental Policy Act" (DOE, 1982); DOE Order 5480.1B, "Environment Safety, and Health Protection Program for Department of Energy Operations" (DOE, 1986d); DOE Order 5480.3, "Safety Requirements for the Packaging and Transportation of Hazardous Materials, Hazardous Substances, and Hazardous Wastes" (DOE, 1985b); and DOE Order 5480.4, "Environmental Protection, Safety, and Health Protection Standards" (DOE, 1984a).	Establishes policies, procedures, and the general framework for environmental protection, safety, and health protection programs.	Specifies and provides requirements for the application of mandatory environmental protection, safety, and health standards.

TABLE 2-16

FUNCTIONAL REQUIREMENTS OF REPOSITORY FACILITIES

Repository Facilities and Components	Functional Requirements
Site Preparation for Facilities Clearing Communications Drainage control Explosives distribution system Fencing Grading Landscaping Layout Railroad Roads Utilities (water, sewage, electrical, fuel)	To provide auxiliary facilities and general services during the construction, operation, closure, and decommissioning of the repository (DOE, 1984b, Subsection 1.2.4).
Surface Facilities **Waste-Handling Facilities** Buildings and structures Handling and packaging equipment Hot cells HVAC Support facilities Surface storage Utilities	To receive, prepare, and store radioactive waste (DOE, 1984b, Subsection 1.2.2). The requirements are to • accept spent fuel from PWRs, with a nominal burnup of 32.5 GWd/MTU, and from BWRs, with a nominal burnup of 27.5 GWd/MTU; • accept during Stage 1, beginning in 1998, 400 MTU/yr of spent fuel waste with the possibility that some waste will have been consolidated at reactors; • accept during Stage 2, 900 MTU of spent fuel waste in 2001, 1,800 MTU in 2002, and 3,000 MTU/yr thereafter, with the possibility of consolidating spent fuel waste at the repository; • accept 400 MTU/yr of high-level waste during Stage 2; • receive truck and rail deliveries of incoming waste up to 80% by rail and up to 70% by truck; • be capable of converting to 100% waste receipt by rail or truck; • accept canisters containing 650 MTU of WVHLW if Yucca Mountain is the first repository built and operated; • accept approximately 15,000 canisters of solidified DHLW at the rate of its generation by defense facilites; and • provide surface storage of 100 MTU of spent fuel during Stage 1 and 750 MTU during Stage 2.

TABLE 2-16

FUNCTIONAL REQUIREMENTS OF REPOSITORY FACILITIES
(continued)

Repository Facilities and Components		Functional Requirements
Surface Facilities (continued)		
Balance of Plant		
Administrative offices Air and steam facility Backfill and packing Backup generators Change room Chemical storage facility Control facility Cooling and chilled water facility Explosives storage areas Fire stations	Fuel storage facility Laboratory facilities Maintenance yard Medical building Potable water system Security stations Sewage system Tuff pile Visitors' center Warehousing areas	To provide auxiliary facilities and general services during the construction, operation, closure, and decommissioning of the repository.
Exhaust Shaft Filter Building		
Building and filters Equipment Utilities and support		To provide a ventilation exhaust system that is capable of controlling the discharge of airborne radioactive materials to the environment within the limits established under 10 CFR 20, Appendix B, Table II; 40 CFR 191.03; and DOE 1984b, Subsection 1.2.2.5.
Shafts and Ramps		
Type	Components	To provide surface openings necessary for transporting radioactive waste from the surface to the emplacement areas and to provide necessary subsurface facilities required for handling excavated tuff, equipment and supplies, and adequate quantities of supply and exhaust air (DOE, 1984b, Subsection 1.2.1). The requirements are • to establish necessary access to the underground facility for disposal operations, and • to provide subsurface facilities for handling excavated tuff and materials, utilities, ground-water control, and ventilation (DOE, 1984b, Subsection 1.2.1).
Emplacement area exhaust shaft Exploratory shafts Men-and-materials shaft Tuff ramp	Equipment Excavation Fixtures Hoist and headframes Lining Seals Utilities Ventilation ducting	

TABLE 2-16

FUNCTIONAL REQUIREMENTS OF REPOSITORY FACILITIES
(concluded)

Repository Facilities and Components		Functional Requirements
Underground Facilities		
Emplacement operations Waste transporter and emplacement equipment		To move radioactive waste from the surface storage vault to the emplacement horizon and to emplace the waste in prepared locations (DOE, 1984b, Subsection 1.2.2).
Underground Support		
Contamination control Control room Emergency medical and rescue Fire protection Maintenance	Materials and hardware Mine water control Operations support Ventilation	To provide auxiliary facilities and general services during the construction, operation, closure, and decommissioning of the repository (DOE, 1984b, Subsection 1.2.4).
Underground Utilities		
Chilled water Communications Compressed air Electrical	Potable water Waste disposal (sanitary and solid)	To provide water, fuel, sanitary and solid waste disposal, electric power, communications, and other utility services to meet the construction, operation, closure, and decommissioning needs of the repository (DOE, 1984b, Subsection 1.2.5).

TABLE 2-17

FUNCTIONAL REQUIREMENTS FOR THE PERFORMANCE CONFIRMATION AND CLOSURE PHASES

Description	Function	Specific Requirements
Performance Confirmation Phase		
The geologic repository operations area shall be designed to preserve the option of waste retrieval throughout the period of waste emplacement and until the performance confirmation program has been completed and reviewed by the NRC. Performance confirmation refers to a program of tests, experiments, and analyses conducted to evaluate the accuracy and adequacy of the information used to determine with reasonable assurance that the performance objectives for the period after permanent closure will be met.	To provide data through the performance confirmation program that indicate that • actual subsurface conditions encountered and changes in those conditions during construction and waste emplacement operations are within the limits assumed in the licensing review and • natural and engineered systems and components required for repository operation, which are designed or assumed to operate as barriers after permanent closure, are functioning as intended (10 CFR 60.140a).	Preserve the option of waste retrieval throughout the waste emplacement period and until the performance confirmation program has been completed and reviewed by NRC. Begin performance confirmation during site characterization and continue with repository caretaking until permanent closure (10 CFR 60.140).
Closure and Decommissioning Phase		
Begins after successful completion of the performance confirmation program. Consists of those activities required to shut down and permanently prevent access to the waste disposed at the repository.	To close and seal underground and repository access systems; to decommission and decontaminate surface facilities; and to implement the procedures, records assembly, and physical barriers of the institutional barrier system.	

TABLE 2-18

DESIGN REQUIREMENTS FOR NATURAL PHENOMENA

Natural Phenomenon	Requirement	Design Value
Earthquake	Risks of seismic activity will be analyzed. Maximum probable earthquakes will be calculated and used to determine the peak acceleration. The repository will be designed to meet this value.	0.40 g horizontal 0.27 g vertical
Wind	The wind velocities to be used in the design will use the 100-yr mean recurrence level in accordance with DOE Order 6430.1 (DOE, 1983c) and ANSI A58.1 (ANSI, 1982).	80 mph
Tornado	Structures, systems, and components requiring tornado protection will be designed for tornado loads based on the tornado characteristics specified in ANSI/ANS-2.3 (1983)	180 mph
Flood	Safety-related surface facilities and underground access will be protected against the PMF as defined by ANSI/ANS-2.8 (ANSI, 1981) by channel-lining and diversionary structures.	

Radiological exposures to the public are of greatest concern during the operations phase. This phase includes the activities of waste emplacement, caretaker operations, possible waste retrieval, and permanent closure. During the operations phase, doses received during normal operations must be in compliance with 10 CFR 20, and the combined annual dose equivalent to any member of the public may not exceed 25 mrem to the whole body, 75 mrem to the thyroid, and 25 mrem to any critical organ (40 CFR 191.03). In addition to the annual dose specified in 40 CFR 191.03, there are dose limits of 500 mrem in a single calendar year, 100 mrem in any 7 consecutive days, and 2 mrem in any 1 hr for an individual continuously present in the unrestricted area (10 CFR 20.105). Section 2.5 contains a discussion of radiation protection requirements.

Following closure, the MGDS will be capable of isolating the radioactive waste from the accessible environment for 10,000 yr so that the release of radionuclides to the accessible environment as a result of expected and unexpected processes and events will be no greater than the limits specified in 40 CFR 191.13. The accessible environment includes (1) the atmosphere, (2) land surface, (3) surface water, (4) oceans, and

(5) all of the lithosphere outside the controlled area. The controlled area includes both the surface location, which encompasses no more than 100 km^2 and extends horizontally no more than 5 km in any direction from the outer boundary of the emplacement area, and the subsurface underlying such a surface location (40 CFR 191.12). The controlled area is considered a part of the disposal system and is not part of the accessible environment.

The annual release rate of any radionuclide will not exceed the limits established in 10 CFR 60.113(b). As defined in 10 CFR 60, favorable pre-emplacement ground-water travel time along the fastest likely path of radionuclide travel from the disturbed zone to the accessible environment is one that substantially exceeds 1,000 yr. The ultimate releases of radioactivity to the environment over a 1,000-yr period following emplacement must not exceed the release limits for ground-water protection and individual protection requirements given in 40 CFR 191. To accomplish this goal, the repository design must provide reasonable expectation that individual annual doses to any member of the public will not exceed 25 mrem to the whole body or 75 mrem to any critical organ for 1,000 yr following disposal (40 CFR 191.15). No Class I ground-water aquifer designated "special" by 40 CFR 191 may be contaminated in excess of the National Primary Drinking Water Regulations [40 CFR 141 (EPA, 1986a)] for 1,000 yr following disposal (40 CFR 191.16). Section 8.3.1 contains more discussion on this topic.

2.4.4 Retrievability

This section focuses on the development of the design basis related to the retrievability requirement. To form a basis for this discussion, the requirements for retrievability and the resulting retrievability philosophy are presented, followed by a discussion of the method used for the development of design criteria and a listing of the current set of design critera related to retrievability.

2.4.4.1 Retrievability Requirements

The regulatory basis for the retrievability requirement is contained in the NWPA (Section 122) and 10 CFR 60 [Section 111(b)]. In general, the regulations require that the emplaced waste be retrievable on a reasonable schedule until the completion of the performance confirmation program and Nuclear Regulatory Commission (NRC) review. For purposes of the NNWSI Project's design, a reasonable schedule for the retrieval period is defined as 34 yr, which is approximately the time required to construct the repository and emplace the waste (Flores, 1986). The time allowed for construction and waste emplacement in the Mission Plan (DOE 1985a) is approximately 30 yr. The 34-yr design period for actual retrieval (Figure 2-10) is thus conservative.

The time during which the ability to initiate retrieval will be maintained is called the "period of retrievability" and is set at 50 yr (DOE, 1986c, Appendix D). This time period is shown in Figure 2-10, and a synopsis of the DOE's retrievability requirements is presented in Table 2-19. An additional design constraint is imposed by 10 CFR 960 [Section 5-1(a)(3)] (DOE, 1986a), which requires that reasonably available technology be demonstrated.

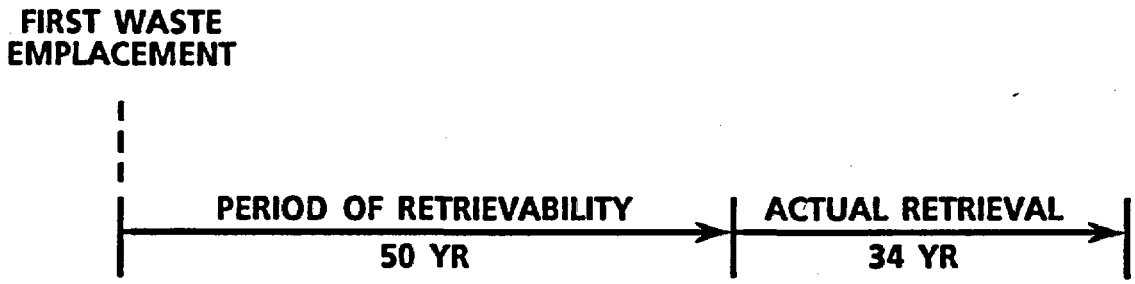

Figure 2-10. Retrieval Time Frame for Design Purposes

2.4.4.2 Retrieval Philosophy

The design presented in this report reflects a retrieval philosophy based on regulatory requirements and is consistent with DOE guidance (DOE, 1986c). This philosophy is summarized below.

- The design of the repository at Yucca Mountain will incorporate the option to retrieve any or all of the emplaced waste as a planned contingency operation; therefore, all of the equipment and facilities necessary to carry out full repository retrieval need not be constructed at the time of repository construction.

- The inclusion of the retrieval option will not compromise the safety of the repository, nor will it compromise the ability of the repository to isolate the emplaced waste.

- The method of retrieval will anticipate credible off-normal conditions and will be designed to operate under off-normal conditions.

- The design of facilities and equipment for retrieval will be based on technology that is reasonably available at the time of license application (LA). In addition, the design of retrieval methods and proof-of-principle demonstrations must be completed at the time of LA.

As an aid to the implementation of this philosophy, two tools have been developed, the first of which is a definition of items important to retrievability. Items important to retrievability are defined as those structures, systems, and components essential to maintaining the ability to retrieve all of the emplaced waste from the repository in a reasonable period of time.

This definition is consistent with 10 CFR 60.111, the DOE's position on retrievability (DOE, 1986c, Appendix D), and the NNWSI Project's position paper on retrievability (Flores, 1986). Appendix L-2 provides a preliminary list of items important to retrievability for the Yucca Mountain

TABLE 2-19

SYNOPSIS OF THE DEPARTMENT OF ENERGY'S RETRIEVABILITY REQUIREMENTS*

Category	Requirement	Topics of Additional Guidance
General Requirements	• Design of the waste retrieval capability shall conform to the NWPA and 10 CFR 60.	• Retrievability • Reasons for retrieval • Duration of retrievability • Time necessary to retrieve
Design Requirements	• The inclusion of the waste retrieval capability shall not affect or unnecessarily complicate the design so that the primary functions of the repository, isolation and containment, are not compromised. • The method of retrieval shall anticipate both normal and off-normal conditions. • The design of the waste container shall consider the potential need for waste retrieval. • The design for waste retrieval capability shall minimize occupational health and safety hazards.	• Reasonably available technology • Geotechnical effects • Ventilation system design • Temporary storage • Demonstration of equipment
Operations Requirements	• The repository shall be operated so that any of the emplaced waste can be retrieved within established time limits.	• Barrier integrity (natural and engineered) • Backfilling • Monitoring and verification • Access maintenance • Equipment reversibility

*DOE (1986c).

repository and contains a discussion of the methods used and the analyses performed to develop this list. The analyses are performed at the quality assurance (QA) level appropriate for the level and importance of design detail. In accordance with NRC views (1986d), items important to retrievability are not necessarily a part of the Q-List (Section 2.7).

The second tool that helps implement the retrieval philosophy is shown in Figure 2-11. In that figure, retrieval conditions are divided into three major categories: normal, off-normal, and not credible. The off-normal category is further subdivided into expected and credible (but less probable) off-normal conditions. The equipment and operations established for the normal conditions will have sufficient flexibility and capability to accommodate the expected off-normal conditions with, at most, minor modifications. This approach is intended to ensure that all events and processes with a reasonable probability of occurrence can be accommodated as essentially routine operations. For credible (but less probable) off-normal conditions, instead of having all equipment and procedures on hand, operational and design analyses will have been performed to establish that retrieval approaches and design concepts are feasible. As part of this effort, where it is warranted, proof-of-principle testing will have been performed before LA to demonstrate the feasibility of retrieval for these lower-probability events (DOE, 1986c, Appendix D). It is assumed that if one of these lower-probability events were to occur, condition-specific investigations and analyses would be necessary to determine whether there is a need to refine or modify procedures and/or equipment. Section 8.3.2 contains additional information on implementation of this philosophy.

This philosophy is consistent with the retrieval strategy defined in Appendix D of the GR (DOE, 1986c) and by Flores (1986). The implementation and refinement of this strategy have led to the above definitions and the concept presented in Figure 2-11. It is expected that this refined concept will be used in the future to establish a decision-making process to provide consistency among retrieval condition development, design, demonstration requirements, and equipment development. If the results of retrieval condition evaluations are combined with the definitions and cutoff probabilities shown in Figure 2-11, design and operational criteria can be developed, equipment development and demonstration needs can be identified, and decisions on what equipment must be present at the repository site can be made.

2.4.4.3 Development of Design Criteria

The current list of design criteria was developed using the NNWSI Project's position on retrievability (Flores, 1986), the DOE's position (DOE, 1986c, Appendix D), and a process called "performance allocation," which is discussed in full in Section 8.3.5.2 of the SCP (DOE, in preparation). Using the regulatory requirements and retrieval philosophy as a basis, the performance allocation process began with the identification of four functions that must be performed to complete retrieval: (1) provide access to the emplacement boreholes, (2) provide access to the emplaced waste container, (3) remove the emplaced waste, and (4) transport and deliver the waste at the surface. Next, the repository processes needed to perform the functions, performance measures for the processes, and performance goals were established. Finally, these performance goals were translated into design criteria.

The current design criteria for retrieval are listed below.

- The access and emplacement drifts will remain usable for at least 84 yr.

PROBABILITY	10^{-1}		10^{-3}	10^{-5}
CONDITION CLASSIFICATION	NORMAL	EXPECTED OFF-NORMAL	CREDIBLE OFF-NORMAL	NOT CREDIBLE
DESIGN APPROACH	DESIGN BASIS		CONTINGENCY	NOT INCLUDED
DEGREE OF READINESS	ESTABLISHED EQUIPMENT ESTABLISHED OPERATIONS		EQUIPMENT CONCEPTS OPERATIONS CONCEPTS	DEVELOP CONDITION SPECIFIC PLAN
DEMONSTRATION PLANS	PROOF-OF-PRINCIPLE DEMONSTRATIONS AND (AS NEEDED) PROTOTYPE DEMONSTRATIONS		PROOF-OF-PRINCIPLE DEMONSTRATIONS (IF NEEDED)	NONE

Figure 2-11. Classification of Retrieval Conditions Based on Probability (Figure prepared for the SCP-CDR.)

- The average amount of spall in the drifts will be less than 5 tons per 1,000 ft of drift per year.
- The rock displacement in the drifts will be less than 6 in.
- The monitoring system will detect rock displacements in the drifts that exceed 1 in.
- The frequency of maintenance of the underground openings will be greater than 5 yr.
- Rockfall in the emplacement boreholes will average less than 250 lb/ft of borehole.
- Displacement of the emplacement borehole wall will be less than 2 in.
- The lifetime of the borehole liner will be at least 84 yr.
- The design-basis retrieval period (retrieval of all emplaced waste) is 34 yr.
- The time required for removal of a single waste container under normal conditions will not exceed twice the amount of time required for emplacement of the waste container.
- In the vertical emplacement concept, the temperature in the access drifts will not exceed 50°C for 50 yr after waste emplacement.
- In the horizontal emplacement concept, the temperature in the emplacement drifts will not exceed 50°C for 50 yr after waste emplacement.
- Worker exposure during removal operations will not exceed any allowable limits for emplacement operations (Section 8.3.2.2).
- All applicable air quality standards will be met in operations areas.
- The ability to remove the waste under normal and off-normal conditions will be demonstrated.
- The maximum liner deflection is 2 in. in the vertical emplacement concept and 3 in. in the horizontal concept.
- In the horizontal emplacement concept, the minimum allowable radius of curvature for the horizontal axis of the borehole liner is 110 ft.
- The ability to perform retrieval operations using reasonably available technology is required.

This list will be revised as the design and performance allocation work are refined. In addition, as work on describing possible retrieval conditions progresses (Section 2.4.4.2), additional design criteria will be developed and included in the basis (Figure 2-11).

2.4.5 Waste Isolation

Section 2.4.2 addresses the generic aspects of waste isolation for an MGDS. The MGDS isolates the emplaced radioactive waste from the accessible environment to ensure the protection of the public health and safety and the quality of the environment. The MGDS is composed of site, repository, and waste package subsystems (DOE, 1984b), which act together to provide containment and isolation of waste. These subsystems must interact harmoniously so that no component will unacceptably affect the planned performance of another component. The material below describes how, for each of these three subsystems, subsurface design and development will address specific topics, such as mining and hydrologic characteristics, that affect waste isolation.

2.4.5.1 Site

The Yucca Mountain site must provide natural barriers for waste containment and isolation. The functional requirement of natural barriers is to minimize or substantially delay the movement of radionuclides to the accessible environment (DOE, 1984b, Section 2.1). The geologic characteristics of the site are of primary importance to isolation.

Design considerations that could affect waste isolation through effects on the geologic characteristics of the site include

- the depth of overburden, which must be greater than 200 m;
- location above the water table;
- location within a preferred zone of the Topopah Spring Member;
- proximity of emplacement holes to faults;
- areal power density (APD); and
- backfill to mitigate the effects of subsidence.

Discussions of the first three considerations above are presented in Sections 6.4.2 and 7.3.1 of this report. Discussion regarding orientation of drifts and boreholes and the APD are presented in Section 6.4.2 of this report and SCP Section 8.3.2.2.

No position has yet been established regarding the proximity of emplacement boreholes to faults. Faults as such may not constitute a design problem. Responses associated with faults may or may not be design problems, depending on the degree of activity of the fault mechanism (i.e., the amount of seepage or water inflow).

The position taken in this report is that backfill is not required for structural stability during preclosure. This position is substantiated in part by the history of mines and tunnels in similar geologic conditions and by the experience in tunnels in the vicinity of Yucca Mountain. However, backfill is tentatively planned as an aid to mitigate the possible effects of subsidence during the postclosure period.

2.4.5.2 Repository

In the design and operation of the repository, there are three overall capabilities that must be considered. The repository must be designed to permit safe emplacement of waste, to retain the option to retrieve the waste, and to provide long-term containment and isolation of the waste. Long-term containment and isolation of the waste involve using engineered barriers that maintain the capabilities of the system and limiting the negative effects of the engineered portions of the repository on the surrounding site. The limitation of negative or adverse effects of the repository on the surrounding rock mass must be a principal consideration during repository design and construction. The adverse effects that must be limited include the thermal and radiation effects of the waste on the host rock and the hydrologic system, the effects of excavation on the surrounding rock, and the effects of penetrations, such as boreholes, on ground-water flow paths. Far-field thermal constraints can be satisfied by distributing 10-yr-old spent fuel in such a way that the initial maximal APD is 57 kW/acre (Johnstone et al., 1984). Mining effects and hydrological constraints on the development of the repository subsurface systems that might affect waste isolation are addressed below.

2.4.5.2.1 Mining

Design requirements involving mining include

- controlled blasting to ensure smoother wall surfaces and to minimize the depth of blast damage around mined openings,
- use of tunnel-boring machines (TBM), and
- use of a low extraction ratio.

"Smooth blasting," one of several techniques categorized as "controlled blasting," describes a mining method used to advance a drift by full-face drilling and blasting. This technique is designed to minimize peripheral or collateral damage to the host rock and helps reduce disruption of the structural and hydrological characteristics of the surrounding rock. This technique is empirically developed for a given rock, and the design can vary as the rock type varies.

TBMs are also used for full-face advancement of a drift. These machines use cutting heads that remove rock from the face and advance the face by boring. When used in suitable rock, the TBMs advance rapidly. They become less effective as rock becomes harder and more sound. A significant characteristic of TBMs is that they cause very little peripheral or collateral damage to the rock, thereby permitting in situ structural and hydrological characteristics to be maintained.

When mining a given subsurface ore body, economic considerations require the recovery to be as large as is practical, which leads to a high extraction ratio. This ratio can be described as the amount of ore removed by mining divided by the size of the ore body. However, a repository is designed so that the extraction ratio is kept as small as practical to limit perturbation of the geologic structure by the mining technique selected. This approach provides the greatest degree of waste isolation and limits potential subsidence.

2.4.5.2.2 Hydrologic Characteristics

The design and development of the subsurface facilities need to address, as design requirements, the maintenance of acceptable hydrologic characteristics of the repository. A partial list of these design considerations includes

- limiting the use of organic compounds in exploratory boreholes and subsurface development;
- limiting water injection by mining, drilling, and surface disposal;
- draining the subsurface facilities; and
- sealing.

Organic compounds are commonly used as slurries in drilling operations to lubricate drill bits and to remove rock chips. Underground operations are likely to involve some spillage of fuel and lubricating oils and grease. The effects of such contamination on the host rock have not been evaluated, but a conservative approach is to avoid the use of organic compounds in drilling fluids when water alone can be used and to limit the possibility of spillage associated with operations.

Water injection resulting from mining, exploratory drilling, and surface disposal could be detrimental to the host rock because these processes all involve the use of water under dynamic or hydrostatic pressures. Water so introduced to the host rock could locally alter the hydrologic characteristics of the rock and, under extreme conditions, induce hydrofracture of the rock, which might alter the hydraulic conductivity of the rock. Hence, quantities of water and operating pressures used will be kept as small as practical.

Subsurface layout and design involve the use of appropriate slopes in the drift floors, which permit any drainage to be conducted away from the emplacement panels. The sump for this drainage is located well away from the emplacement areas at the bottom of the emplacement area exhaust shaft (Figure 4-33). The amount of drainage (if any) is expected to be small, and the water will be pumped to the surface for disposal.

Sections 5.1.3, 5.2, and 5.3 address sealing the underground facility, shafts and ramps, and exploratory boreholes, respectively. These efforts will prepare the repository for closure and will be completed after the decision has been made that waste retrieval is not necessary.

2.4.5.3 Waste Package

The waste package requirements for containment and isolation are discussed in Section 2.1.3.

2.5 Radiation Protection

This section contains a discussion of the radiological characteristics and parameters used in the conceptual design of the repository at Yucca Mountain. These parameters are those aspects or properties of the radioactive waste and its handling that must be considered in the design

of the repository to ensure the safety of both repository personnel and the general public. Radiation protection concerns will be examined in greater detail in future design efforts.

This discussion is limited to identification of the parameters and design concepts that provide radiation protection. An analysis of the design with respect to radiation protection is presented in Sections 6.1 and 6.2. Throughout the design of the repository, the concept of "as low as reasonably achievable" (ALARA) is applied. The background and philosophy of the ALARA concept and ALARA programs can be found in a guide prepared by Kathren et al. (1980) and by the NRC (1978). Radiation exposure limits have been established in three federal regulations: 10 CFR 20, 10 CFR 60, and 40 CFR 191, as described in Section 2.6. These limits have been incorporated in the existing design requirements documents (i.e., the SR and the SDR), thus ensuring that the repository will be designed to meet the necessary limits. In addition, the radiation protection issues (Issues 2.1, 2.2, 2.3, and 2.7, described in Chapter 8) also invoke the regulations listed above. Further discussions relevant to these issues can be found in Sections 6.1 (Issues 2.1 and 2.2), 6.2 (Issue 2.3), and 8.4 through 8.7 (Issues 2.1 through 2.3 and 2.7).

2.5.1 Radiation Exposure Concerns

Operations that are of concern regarding radiation exposure of repository personnel or the general public can be categorized as shown in Table 2-20. The sources of potential exposure include direct, penetrating radiation (primarily neutron and gamma radiation from the radioactive components of the waste); removable surface contamination that might be transferred to personnel or the environment; release of gaseous radionuclides or airborne particulates, which might result in inhalation or external contamination; release of contaminated liquids, which might result in radiation exposure; and criticality events which would result in penetrating radiation exposure. Public exposure to contaminated ground water and radionuclide transport through the host rock are precluded by following repository siting criteria. Evaluation of the impact of radioactive releases from the repository will take into account the characteristics of radiation at the site before construction.

The significance of these concerns within each of the functional areas of the repository depends on the particular operations performed and on the physical or radiological properties of the radioactive material handled in each area. Table 2-20 shows the major functional areas for which each exposure mechanism is a concern that must be considered in the repository design.

External radiation is a common concern throughout all portions of the repository in which waste is handled. Surface contamination is primarily of concern in the surface facilities, where incoming waste is removed from shipping casks and processed for disposal. Release of gaseous or particulate materials is also a primary concern in these same areas. Criticality is of concern in those areas where sufficient fissile material could be present to provide a potential for a critical array.

TABLE 2-20

RADIATION EXPOSURE CONCERNS

Radiation Exposure Mechanisms	Surface Facilities					Underground Facilities						Design Considerations	Design Element
	Waste Receiving	Consolidation	Packaging	Storage	Waste Treatment	Mine Development	Storage of Mined Tuff	Transfer of Waste to the Emplacement Area	Waste Emplacement	Maintenance and Decontamination	Performance Confirmation		
External Radiation	X	X	X	X	X	X	X	X	X	X	X	Source strength Shielding properties Separation distance Exposure time	Remote handling Hot cells Portable shielding Operations schedule
Surface Contamination	X	X	X	X						X	X	Concentrations Exposure time Mobility Separation distance	Inspection Decontamination Hot cells Waste treatment
Gaseous and Airborne Particulates	X	X	X		X	X	X			X	X	Release rates Concentrations Radionuclide composition Ventilation rules Airflow logic	Hot cells HVAC system Subsurface ventilation system
Contaminated Liquids	X	X	X		X			X	X	X	X	Collection Monitoring Treatment Disposal	Secondary waste collection and treatment systems
Criticality	X	X	X	X					X		X	Fissile content Neutron interactions Geometry	Inventory control Storage array Disposal environment

Limiting exposure of personnel and the public requires consideration of the parameters that define the character of the exposure source and consideration of the methods for controlling that exposure (Table 2-20). Significant elements affected by these considerations are also identified in the table.

2.5.2 Design Considerations

The repository design must include specific features for normal operating conditions that reduce or eliminate radiation exposure. The design of these features will take into account exposure mechanisms and previously demonstrated techniques for mitigating exposure. These design features are common to a particular exposure mechanism throughout the repository. However, the specifics of the design will depend on the magnitude of the potential exposure and the most efficient means of limiting that exposure. The design features that mitigate each form of exposure are summarized in Table 2-20.

2.5.2.1 External Radiation

Penetrating neutron and gamma radiation is emitted by high-level waste and, at lower rates, by site-generated wastes. In addition, the tuff contains traces of naturally occurring gamma-emitters, which represent a source for external exposure in the underground facility.

Radiation shielding, in the form of masonry, metals, concrete, and the tuff itself, absorbs radiation, reducing personnel exposure. Similarly, maintaining sufficient physical separation between personnel and a radiation source reduces exposure rates. The location of personnel performing particular tasks will be governed, in part, by the need to separate personnel from the source of radiation. Finally, personnel exposure may be limited by controlling the length of time personnel must be present in a radiation field. The minimum time necessary to perform a task in a radiation field will be a primary concern in designing tasks.

An operations schedule will be developed to establish the approximate length of time required for each operation. This schedule, in conjunction with known exposure rates, will allow evaluation and modification of the design, as needed, to limit total exposures. The optimum combination of shielding, distance, and exposure times will be used to control external radiation exposure.

2.5.2.2 Surface Contamination

Provisions must be made for possible surface contamination on incoming waste shipments. These shipments will be inspected and decontaminated as necessary. However, the primary sources of surface contamination during normal operations are corrosion products, particulates from damaged fuel elements, and other scale on fuel assemblies, which may be dislodged during shipment of the waste or during subsequent processing in the surface facilities. Some of this contamination may remain in the cask after the assemblies have been removed, necessitating subsequent decontamination. Some contamination could be transferred to the exterior surfaces of the disposal container while it is in the waste-packaging hot cell.

Decontamination stations will therefore be included in the packaging process. Accumulation of surface contamination in the consolidation or waste-packaging areas will require periodic decontamination.

2.5.2.3 Airborne Contamination

Spent fuel and high-level waste contain volatile or gaseous radionuclides, which may escape from the waste during shipment and accumulate in the shipping cask. Processing the fuel assemblies, particularly in the consolidation process, provides additional opportunities for release of gaseous radionuclides. Some fine particulate contamination may also become airborne. The controlled ventilation system for the processing areas will be designed to limit exposures from this source.

During construction of the underground facilities, the breaking and crushing of rock will release some radioactive material that exists naturally. The radioactive material consists of naturally occurring heavy metals (uranium and thorium) and their decay products. Some of the radioactive decay products of these heavy metals are gaseous. These gases diffuse into the drifts, where they decay to particulate daughters. Inhalation of these radioactive particulates constitutes the main concern in radiological safety during excavation. Estimates of the quantities of these releases for both the horizontal and vertical emplacement configurations are presented in Table 2-21. These values have been estimated from those given for a repository constructed in granite, which has approximately the same uranium and thorium content as that of the tuff at Yucca Mountain (DOE, 1980).

TABLE 2-21

ESTIMATED ANNUAL RELEASES OF NATURALLY OCCURRING RADIONUCLIDES TO THE ATMOSPHERE AS THE RESULT OF REPOSITORY CONSTRUCTION

	Release (Ci/yr)	
Radionuclide	Horizontal Emplacement	Vertical Emplacement
Radon-220	1.8	5.9
Radon-222	1.7	5.6
Lead-210	1.4×10^{-4}	4.7×10^{-4}
Lead-212	2.2×10^{-3}	8.8×10^{-3}
Lead-214	1.7	5.6
Bismuth-210	1.7	5.6

The quantity of gaseous radionuclides released underground is directly proportional to the amount and particle size of the mined tuff, to the exposed surface area of the tuff underground, and to the natural radionuclide content of the tuff. The temperature of the host rock and the amount of thermal energy absorbed by the tuff also influence the quantity of radionuclides released. Ventilation of the subsurface facilities will provide the primary control of exposure to radionuclides released from the tuff.

Mined tuff is stored in a tuff pile on the surface. The tuff pile also releases radioactive gases and presents a potential source for both occupational and public exposures. The transport of this radioactivity is governed by meteorological parameters, such as wind speed and direction, atmospheric stability and mixing height, and precipitation. Runoff from the tuff pile will be controlled to limit waterborne contamination.

2.5.2.4 Liquid Releases

Areas in which radioactive materials are handled may generate contaminated liquids. To prevent release of any contaminated liquids to water, all these liquids will be collected, sampled, and monitored before being released into conventional sanitary drains. The quantities of water from seepage or flooding in the underground emplacement areas are expected to be minimal. Any liquids collected in the underground emplacement areas that are brought to the surface will be sampled and monitored to ensure that no contaminated liquids are introduced into the sanitary sewer systems or the environment.

2.5.2.5 Criticality Safety Considerations

Criticality safety is a very important design criterion for repository operations (10 CFR 60.131). This regulation requires that all systems in a repository be designed to ensure that a nuclear criticality accident is not possible. There are many parameters to be considered in designing for criticality safety. Some of the most important factors, described by Gore et al. (1980), are listed in Table 2-22.

TABLE 2-22

FACTORS INFLUENCING CRITICALITY

Fissile Materials	**Neutron Reflectors Outside Fissile-Moderator Region**
• Mass • Isotopic content • Density	• Materials • Density • Moderating properties
Neutron Moderators	**Neutron Absorbers (Poisons)**
• Materials present • Amount • Density	• Material • Amount • Location
Fissile-Moderator Region	**Interacting Regions of Fissile Material**
• Size • Shape	• Number • Separation • Interposed nonfissile materials • Planar vs. three-dimensional arrays

The issue in designing for criticality safety is which of those parameters listed in Table 2-22 are to be controlled. Two reports that consider criticality safety in the design of surface facilities have been published by Lipner and Ravets (1980) and McKinley et al. (1980). Several reports pertaining to design for criticality safety in the subsurface facilities have also been published (Gore et al., 1980; Gore et al., 1981; Weren et al., 1983; Gore and Jenquin, 1981; O'Neal et al., 1984).

The parameters that are most important to criticality safety are (1) the fissile content of the material of concern, (2) the amount of fissile material present, (3) the presence of neutron moderators or reflectors, and (4) the configuration of the waste containers during handling and storage. These parameters define the degree of control and the sensitivity of criticality to the factors in Table 2-22.

A secondary concern for the underground facility is the possibility that fissile material will leach from the emplaced waste packages and accumulate in another location under conditions favorable to criticality. Parameters that affect the leaching of fissile material include (1) the hydrologic characteristics of the site, (2) the amount of water that flows through the emplacement area, (3) the corrosion and solubility characteristics of the waste package, (4) the life of the waste container, (5) the waste form and its solubility characteristics, and (6) the time required for leaching and subsequent formation of a critical mass. Allen (1978) and Brookins (1978) have published reports pertaining to the criticality of waste materials.

2.6 Regulatory Requirements

This section summarizes important laws and federal regulations applicable to the design of the Yucca Mountain repository. The SR (Appendix P) provides a systematic, functional allocation of the requirements and will, in future revisions, include a matrix that correlates the requirements with the issues hierarchy. Issues important to the design are presented in Chapter 8.

2.6.1 Nuclear Waste Policy Act of 1982

The NWPA was passed "to provide for the development of repositories for the disposal of high-level radioactive waste and spent nuclear fuel, to establish a program of research, development, and demonstration regarding the disposal of high-level waste and spent nuclear fuel, and for other purposes." The NWPA assigns to the DOE the responsibility of siting, constructing, and operating repositories; directs the NRC to develop technical requirements for licensing the disposal of radioactive waste in mined geologic repositories; and directs the EPA to establish environmental standards for the disposal of radioactive waste.

2.6.2 Federal Regulations

Passage of the NWPA necessitated the addition of new parts to the Code of Federal Regulations that specifically address repositories for high-level radioactive waste. These and other regulations are summarized in Table 2-23.

TABLE 2-23

MAJOR PARTS OF THE CODE OF FEDERAL REGULATIONS APPLICABLE TO A REPOSITORY

Part	Description	Requirements
10 CFR 20 "Standards for Protection Against Radiation"	Prescribes allowable exposure levels for personnel in restricted areas and for members of the public in unrestricted areas as the result of normal operational releases.	Annual dose limits to • personnel in the restricted area are - 5 rem to the whole body or individual organs, - 75 rem to the hands and feet, and - 30 rem to the skin; and • members of the public in unrestricted areas - 0.5 rem to the whole body. Allowable concentration guides are specified for individual radionuclides in air and water.
10 CFR 60 "Disposal of High-Level Radioactive Wastes in Geologic Repositories"	Subpart B--Licenses Prescribes rules governing the licensing of the DOE to receive and possess source, special nuclear, and byproduct material at a geologic repository operations area.	NRC licensing requirements include • an application consisting of general information and a safety analysis report accompanied by an environmental report; • reasonable assurance that before a construction authorization is granted - the radioactive materials described in the application can be received, processed, and disposed without unreasonable risk to the health and safety of the public; - the activities proposed in the application are not inimical to the common defense and security; and - environmental quality is protected; • stipulations that before a license is issued to receive and possess source, special nuclear, or byproduct material at a geologic repository operations area - construction of the geologic repository operations area conforms with (1) the application as amended, (2) the provisions of the Atomic Energy Act of 1954, and (3) the rules and regulations of the NRC; and - the issuance of the license is not inimical to the common defense and security and does not constitute an unreasonable risk to the health and safety of the public; and • stipulations that, in a license amendment for permanent closure, the DOE - submit an application to amend the license before decommissioning and - update its environmental report.
	Subparts D, E, and F Include general recordkeeping and reporting requirements, technical criteria, repository and waste package performance requirements, and performance confirmation requirements.	NRC requires that DOE records, reports, tests, and inspections include • records and reports required for licensing; • construction records of the geologic repository operations area;

TABLE 2-23

MAJOR PARTS OF THE CODE OF FEDERAL REGULATIONS APPLICABLE TO A REPOSITORY
(continued)

Part	Description	Requirements
10 CFR 60 (continued)		• a written report on each significant deficiency found in the characteristics of the site and in the design and construction of the geologic repository operations area; • tests NRC deems appropriate or necessary for the administration of 10 CFR 60; • records of the performance confirmation program conducted in accordance with 10 CFR 60, Subpart F; • records of NRC inspections of the premises of the geologic repository operations area and adjacent DOE access areas; • NRC inspection of DOE activity records; and • office space provided for NRC inspectors. NRC technical criteria requirements include • the performance objectives for - protection against radiation exposures and releases of radioactive material during the preclosure period; - retrievability of any or all waste in the geologic repository operations area through permanent closure; - assurance that releases of radioactive materials to the accessible environment following permanent closure conform to EPA standards; - waste package containment; - ground-water travel time; and - engineered barrier system release rate criterion; • the requirement that the land on which the geologic repository operations area and the controlled area are located be under the jurisdiction and control of the DOE, or be withdrawn and reserved for this use, and be free and clear of all significant encumbrances; • the requirement that the geologic setting and engineered barrier system meet siting criteria well enough to provide reasonable assurance that the performance objectives relating to waste isolation will be met; • meeting the minimum design criteria specified for the geologic repository operations area and meeting the additional design criteria for the surface facilities, the underground facility, and the design of seals for shafts and boreholes; • meeting the design criteria for the waste package and its components; and • designing the geologic repository operations area to permit implementation of a performance confirmation program that meets the requirements of Subpart F.

TABLE 2-23

MAJOR PARTS OF THE CODE OF FEDERAL REGULATIONS APPLICABLE TO A REPOSITORY
(continued)

Part	Description	Requirements
10 CFR 60 (concluded)		NRC requires a performance confirmation program to • confirm geotechnical and design parameters and • monitor and test waste packages.
	Subpart G Identifies QA requirements for the geologic repository and its subsystems or components. Note: Provisions to ensure compliance with long-term containment requirements, similar to those in 40 CFR 191.13, will be added to this regulation.	NRC requires that the QA program • apply to all systems, structures, and components important to safety; • apply to design and characterization of barriers important to waste isolation and the activities required to ensure waste isolation; and • be implemented by DOE in accordance with 10 CFR 50, Appendix B (NRC, 1986c).
10 CFR 960 "General Guidelines for the Recommendation of Sites for Nuclear Waste Repositories"	Contains guidelines that specify the factors considered in evaluating and comparing sites on the basis of expected repository performance before and after closure. Note: The statements of the preclosure and postclosure system guidelines from 10 CFR 960 are intended to convey that all disqualifying, qualifying, favorable, and potentially adverse conditions were considered, as appropriate, for this stage of design.	DOE preclosure system guidelines require that • any projected radiological exposures of the general public and any projected releases of radioactive materials to restricted and unrestricted areas during repository operation and closure shall meet the applicable safety requirements set forth in 10 CFR 20, 10 CFR 60, and 40 CFR 191, Subpart A; • during repository siting, construction, operation, closure, and decommissioning, the public and the environment shall be adequately protected from the hazards posed by the disposal of radioactive waste; and • repository siting, construction, operation, and closure shall be demonstrated to be technically feasible on the basis of reasonably available technology, and the associated costs shall be demonstrated to be reasonable relative to other available and comparable siting options. DOE postclosure system guidelines require that the geologic setting at the site shall allow for the physical separation of radioactive waste from the accessible environment after closure in accordance with the requirements of 40 CFR 191, Subpart B, as implemented by the provisions of 10 CFR 60. The geologic setting at the site will allow for the use of engineered barriers to ensure compliance with the requirements of 40 CFR 191 and 10 CFR 60.
30 CFR 57 (DOL, 1985) "Safety and Health Standards--Underground Metal and Nonmetal Mines"	Prescribes health and safety standards for the purpose of protection of life, the promotion of health and safety, and the prevention of accidents in underground metal and nonmetal mines.	This regulation contains many specific health and safety regulations for the following systems: • ground control; • fire prevention and control; • air quality; • explosives;

TABLE 2-23

MAJOR PARTS OF THE CODE OF FEDERAL REGULATIONS APPLICABLE TO A REPOSITORY
(concluded)

Part	Description	Requirements
30 CFR 57 (concluded)		• drilling; • loading, hauling, and dumping; • aerial tramways; • electricity; • compressed air and boilers; • use of equipment; • personnel protection; • materials storage and handling; • safety programs; • man hoisting; • gassy mines; and • miscellaneous.
40 CFR 191 (EPA, 1986b) "Environmental Radiation Protection Standards for the Management and Disposal of Spent Nuclear Fuel, High-Level, and Transuranic Radioactive Wastes"	Sets standards for radiation doses and the release of radioactive materials. Subpart A--Management and Storage Subpart B--Disposal Note: Provisions to ensure compliance with long-term performance requirements (40 CFR 191.14) apply only to facilities not regulated by the NRC.	EPA requires that • the management and storage of spent nuclear fuel, high-level, or transuranic radioactive wastes be conducted in a manner that provides reasonable assurance that the combined annual radiation dose to any member of the public from these operations not exceed 25 mrem to the whole body, 75 mrem to the thyroid, or 25 mrem to any other organ (40 CFR 191.03) for 1,000 yr (40 CFR 191.15); • disposal systems for high-level or transuranic wastes be designed to provide a reasonable expectation that for 10,000 yr after disposal (40 CFR 191.13) - reasonably foreseeable releases of waste to the accessible environment are less than the quantities calculated according to Table 1 of 40 CFR 191, Appendix A, and - very unlikely releases of waste to the accessible environment are projected to be less than 10 times the quantities calculated according to Table 1 of 40 CFR 191, Appendix A; • undisturbed performance of the disposal system for 1,000 yr after disposal shall not cause the annual dose equivalent to members of the public in the accessible environment to exceed 25 mrem to the whole body or 75 mrem to any critical organ (40 CFR 191.15); and • special sources of ground water not be degraded below EPA's drinking water standards for 1,000 yr after disposal (40 CFR 191.16). Appendix B of 40 CFR 191 contains guidance for implementation of Subpart B, the environmental standards for disposal.

Note: 49 CFR 171-178 (DOT, 1985), which pertains to transport of radioactive material, applies to offsite activity and is therefore not addressed in this report.

2.6.3 State Requirements

State of Nevada requirements to be considered include water and air quality laws, safety and fire protection standards, and regulations pertaining to wildlife. A preliminary summary of state laws and regulations is shown in Table 2-24. California regulations that must be considered to comply with DOE Order 5480.4 (DOE, 1984a) are shown in Table 2-25.

TABLE 2-24

PRELIMINARY SUMMARY OF STATE ENVIRONMENTAL REGULATORY REQUIREMENTS

Laws and Regulations	Description
NRS (Nevada Revised Statutes), Title 40, Chapter 444, Public Health and Safety; Sanitation, 1986.	Standards for solid waste disposal.
NRS (Nevada Revised Statutes), Title 40, Chapter 445, Public Health and Safety; Water Controls, Air Pollution, 1985.	Standards for water and air quality.
NRS (Nevada Revised Statutes), Title 40, Chapter 459, Public Health and Safety; Hazardous Materials, Radioactive Waste, 1985.	Standards for hazardous and radioactive waste management.
NRS (Nevada Revised Statutes), Title 45, Chapter 501, Wildlife; Administration and Enforcement, 1985.	Standards for wildlife protection.
NRS (Nevada Revised Statutes), Title 46, Chapter 512, Mines and Minerals; Inspection and Safety of Mines, 1985.	Standards for open pit and underground metal and nonmetal mines, health and safety.
NRS (Nevada Revised Statutes), Title 48, Chapter 533, Water; Adjudication of Vested Water Rights, Appropriation of Public Waters, 1986.	Standards for adjudication of vested water rights and appropriation of public waters.
NRS (Nevada Revised Statutes), Title 48, Chapter 534, Water; Underground Water and Wells, 1986.	Standards for plugging wells.

2.7 Classification of Systems, Structures, and Components Important to Safety and Waste Isolation

This section focuses on the definitions used for the classification of systems, structures, and components and the basis for these definitions. Systems, structures, and components are classified as belonging

TABLE 2-25

APPLICABLE STATE OF CALIFORNIA REGULATIONS*

Regulation	Description
Mine Safety Orders, Administrative Code, Title 8, Chapter 4, Subchapter 17, California Administrative Code (1981a)	Mine safety standards, including items such as design and selection of conveyors and components.
Tunnel Safety Orders, Administrative Code, Title 8, Chapter 4, Subchapter 20, California Administrative Code (1981b)	Tunnel safety standards.

*Mandatory compliance is required by DOE Order 5480.4 (DOE, 1984a), Attachment 2. Current design guidance from the NNWSI Project is that the fans provided for underground ventilation are not required to be reversible because the underground facility, by use of pressure differentials, is designed to isolate and contain potential radiological releases. Fan reversal would negate the pressure differential between the emplacement and development areas, which is part of the containment control system. This guidance is not in compliance with the California Administrative Code, but a variance may be requested. Exemptions from the State of California codes must be approved by DOE's Assistant Secretary for Policy, Safety, and Environment.

to one or both of two categories: (1) items important to safety and (2) items and activities important to waste isolation. Items important to safety are defined in 10 CFR 60.2; however, no NRC or DOE regulation defines "important to waste isolation." Consequently, the NNWSI Project has developed a definition of "important to waste isolation" that is consistent with both NRC and DOE regulations and that facilitates objective determination of those systems, structures, and components of the Yucca Mountain repository that fall into this category. Both items important to safety and items important to waste isolation subsequently make up a list called the "Q-List." Items on the Q-List are subject to the QA requirements given in 10 CFR 60, Subpart G, and may be examined by the NRC to verify that proper QA and design procedures were applied to the items.

2.7.1 Items Important to Safety

Items important to safety are defined in 10 CFR 60.2 as

"those engineered structures, systems, and components essential to the prevention or mitigation of an accident that could result in a radiation dose to the whole body, or any organ, of 0.5 rem or greater at or beyond the nearest boundary of the unrestricted area at any time until the completion of permanent closure."

Unlike the definition of "important to waste isolation" given in this section, this definition is provided by NRC regulations. Although the definition places no qualifications on the accidents used to identify items important to safety, the accidents must be credible; that is, their probability of occurrence must be 10^{-5}/yr, or greater (DOE, 1986f).

Section 4.6.1 contains a preliminary list of items important to safety for the Yucca Mountain repository. Section 7.4.1 contains a discussion of the methods used and the analyses performed to develop the preliminary list of items important to safety. These analyses are performed at the QA level appropriate to the level of design detail and the importance of the analysis to safety.

2.7.2 Items Important to Waste Isolation

Barriers ("items") important to waste isolation are defined by the DOE (Stein, 1987) as the barriers, structures, systems, and components that are relied on to achieve the postclosure performance objectives stated in 10 CFR 60, Subpart E. The engineered barriers that meet this definition are placed on a Q-List. The natural barriers that meet this definition are not placed on the Q-List because their contribution to waste isolation cannot be enhanced by design activities. Instead, their ability to isolate the waste is given special protection through an "activities list." This list contains all the activities that might adversely affect that ability and for which design criteria are not meaningful.

Section 4.6.2 provides a preliminary list of items important to waste isolation and a preliminary activities list for the Yucca Mountain repository. Section 7.4.2 reviews the development of these lists from the performance allocation presented in detail in the SCP. Section 6.4.6 provides a directory to discussions of items important to waste isolation.

REFERENCES FOR CHAPTER 2

Allen, E. J., "Criticality Analysis of Aggregations of Actinides from Commercial Nuclear Waste in Geological Storage," ORNL/TM-6458, Oak Ridge National Laboratory, Oak Ridge, TN, August 1978.

ANSI/ANS-2.8, "Determining Design Basis Flooding at Power Reactor Sites," American Nuclear Society, La Grange Park, IL, 1981.

ANSI A58.1, "Minimum Design Loads for Buildings and Other Structures," American National Standards Institute, Inc., New York, NY, 1982.

ANSI/ANS-2.3, "Standard for Estimating Tornado and Extreme Wind Characteristics at Nuclear Power Sites," American Nuclear Society, La Grange Park, IL, 1983.

Atomic Energy Act of 1954, Public Law 83-703, 68 Stat. 919, Washington, D.C., 1954.

ASHRAE (American Society of Heating, Refrigerating and Air-Conditioning Engineers, Inc.), "ASHRAE Handbook, 1985 Fundamentals," Atlanta, GA, 1985.

Barton, N., "Modelling Rock Joint Behavior from In Situ Block Tests: Implications for Nuclear Waste Repository Design," ONWI-308, prepared by Terra Tek, Inc., for Office of Nuclear Waste Isolation, Battelle Memorial Institute, Columbus, OH, 1982.

Brookins, D. G., "Geochemical Constraints on Accumulation of Actinide Critical Masses from Stored Nuclear Waste in Natural Rock Repositories," ONWI-17, Office of Nuclear Waste Isolation, Battelle Memorial Institute, Columbus, OH, December 1978.

Byers, F. M., Jr., W. J. Carr, P. P. Orkild, W. D. Quinlivan, and K. A. Sargent, "Volcanic Suites and Related Cauldrons of Timber Mountain-Oasis Valley Caldera Complex, Southern Nevada," USGS-PP-919, Washington, D.C., 1976.

California Administrative Code, Title 8, "Industrial Relations," Part 1, "Department of Industrial Relations," Chapter 4, "Division of Industrial Safety," Subchapter 17, "Mine Safety Orders," July 1981a.

California Administrative Code, Title 8, "Industrial Relations," Part 1, "Department of Industrial Relations," Chapter 4, "Division of Industrial Safety," Subchapter 20, "Tunnel Safety Orders," 1981b.

Carpenter, D. W., and D. H. Chung, "Effects of Earthquakes on Underground Facilities: Literature Review and Discussion," NUREG/CR-4609 (UCID-20505), Lawrence Livermore National Laboratory, Livermore, CA, June 1986.

Christiansen, R. L., P. W. Lipman, W. J. Carr, F. M. Byers, Jr., P. P. Orkild, and K. A. Sargent, "Timber Mountain-Oasis Valley Caldera Complex of Southern Nevada," Geological Society of America Bulletin, Vol. 88, No. 7, pp. 943-959, July 1977.

Church, H. W., D. L. Freeman, K. Boro, and R. T. Egami, "Meteorological Tower Data for the Nevada Nuclear Waste Storage Investigations (NNWSI) Tri-Quarterly Report, October 1982-June 1983, Yucca Alluvial (YA) Site," SAND84-1327, Sandia National Laboratories, Albuquerque, NM, December 1984.

Crippen, J. R., and C. D. Bue, "Maximum Floodflows in the Coterminous United States," USGS-WS-1887, Washington, D.C., 1977.

Czarnecki, J. B., "Simulated Effects of Increased Recharge on the Ground-Water Flow System of Yucca Mountain and Vicinity, Nevada-California," USGS-WRI-84-4344, Denver, CO, 1985.

Dieterich, J. H., "Time-Dependent Friction as a Possible Mechanism for Aftershocks," Journal of Geophysical Research, Vol. 77, No. 20, pp. 3771-3781, July 1972a.

Dieterich, J. H., "Time-Dependent Friction in Rocks," Journal of Geophysical Research, Vol. 77, No. 20, pp. 3690-3697, July 1972b.

DOE (U.S. Department of Energy), "Final Environmental Impact Statement--Management of Commercially Generated Radioactive Waste," DOE/EIS-0046F, three volumes, Washington, D.C., October 1980.

DOE (U.S. Department of Energy), "Implementation of the National Environmental Policy Act," Order 5440.1B, Washington, D.C., May 1982.

DOE (U.S. Department of Energy), "Site Development and Facility Utilization Planning," Order 4320.1A, Washington, D.C., March 1983a.

DOE (U.S. Department of Energy), "Management of Construction Projects," Order 6410.1, Washington, D.C., May 1983b.

DOE (U.S. Department of Energy), "General Design Criteria," Order 6430.1, Washington, D.C., December 1983c.

DOE (U.S. Department of Energy), "Environmental Protection, Safety, and Health Protection Standards," Order 5480.4, Washington, D.C., May 1984a.

DOE (U.S. Department of Energy), "Generic Requirements for a Mined Geologic Disposal System," DOE/NE/44301-1, Office of Civilian Radioactive Waste Management, Washington, D.C., September 1984b.

DOE (U.S. Department of Energy), "Mission Plan for the Civilian Radioactive Waste Management Program," DOE/RW-0005, Office of Civilian Radioactive Waste Management, Washington, D.C., June 1985a.

DOE (U.S. Department of Energy), "Safety Requirements for the Packaging and Transportation of Hazardous Materials, Hazardous Substances, and Hazardous Wastes," Order 5480.3, Washington, D.C., July 1985b.

DOE (U.S. Department of Energy), "General Guidelines for the Recommendation of Sites for Nuclear Waste Repositories," Code of Federal Regulations, Energy, Title 10, Part 960, Washington, D.C., January 1986a.

DOE (U.S. Department of Energy), "Environmental Assessment, Yucca Mountain Site, Nevada Research and Development Area, Nevada," DOE/RW-0073, Office of Civilian Radioactive Waste Management, Washington, D.C., May 1986b.

DOE (U.S. Department of Energy), "Generic Requirements for a Mined Geologic Disposal System," Appendix D, "Department of Energy Position on Retrievability and Retrieval for a Geologic Repository," OGR/B-2, DOE/RW-0090, Office of Civilian Radioactive Waste Management, Washington, D.C., June 1986c.

DOE (U.S. Department of Energy), "Environment, Safety, and Health Program for Department of Energy Operations," Order 5480.1B, Washington, D.C., September 1986d.

DOE (U.S. Department of Energy), "Waste Management Systems Requirements and Descriptions (SRD)," DOE/RW-0063, Office of Civilian Radioactive Waste Management, Washington, D.C., 1986e.

DOE (U.S. Department of Energy), "Guidance for Developing the SCP-CDR and SCP Q-Lists," prepared by Roy F. Weston, Inc., for the DOE, 1986f.

DOE (U.S. Department of Energy), "Site Characterization Plan, Yucca Mountain Site, Nevada Research and Development Area, Nevada," Office of Civilian Radioactive Waste Management, Washington, D.C., in preparation.

DOL (U.S. Department of Labor), "Safety and Health Standards--Underground Metal and Nonmetal Mines," Code of Federal Regulations, Mineral Resources, Title 30, Part 57, Washington, D.C., July 1985.

DOT (U.S. Department of Transportation), Code of Federal Regulations, Transportation, Title 49, Parts 171-178, Washington, D.C., November 1985.

Dudley, W. W., Jr., U.S. Geological Survey, letter to D. L. Vieth, Waste Management Project Office, Las Vegas, NV, regarding status of ongoing neotectonic studies, October 31, 1985.

Eglinton, T. W., and R. J. Dreicer, "Meteorological Design Parameters for the Candidate Site of a Radioactive-Waste Repository at Yucca Mountain, Nevada," SAND84-0440/2, Sandia National Laboratories, Albuquerque, NM, December 1984.

EPA (U.S. Environmental Protection Agency), "National Primary Drinking Water Regulations, Code of Federal Regulations, Protection of Environment, Title 40, Part 141, Washington, D.C., July 1986a.

EPA (U.S. Environmental Protection Agency), "Environmental Radiation Protection Standards for Management and Disposal of Spent Nuclear Fuel, High-Level and Transuranic Radioactive Wastes," Code of Federal Regulations, Protection of Environment, Title 40, Part 191, Washington, D.C., July 1986b.

Erickson, J. R., and R. K. Waddell, "Identification and Characterization of Hydrologic Properties of Fractured Tuff Using Hydraulic and Tracer Tests--Test Well USW H-4, Yucca Mountain, Nye County, Nevada," USGS-WRI-85-4066, Denver, CO, 1985.

Flores, R. J., "Retrievability: Strategy for Compliance Demonstration," SAND84-2242, Sandia National Laboratories, Albuquerque, NM, January 1986.

Friedman, M., J. M. Logan, and J. A. Rigert, "Glass-Indurated Quartz Gouge in Sliding-Friction Experiments on Sandstone," Geological Society of America Bulletin, Vol. 85, pp. 937-942, June 1974.

Geological Society of America, Inc., "Nevada Test Site," Memoir 110, Eckel, E. B., ed., Boulder, CO, 1968.

Gore, B. F., and U. P. Jenquin, "Two Factors Important to the Criticality Potential of Spent Fuel in Geologic Repositories," Proc. of Waste Management '81, ANS Topical Meeting, Vol. 2, Tucson, AZ, 1981.

Gore, B. F., G. W. McNair, and S. W. Heaberlin, "Criticality Safety Considerations in the Geologic Disposal of Spent Nuclear Fuel Assemblies," PNL-3268, Pacific Northwest Laboratory, Richland, WA, May 1980.

Gore, B. F., U. P. Jenquin, and R. J. Serne, "Factors Affecting Criticality for Spent-Fuel Materials in a Geologic Setting," PNL-3791, Pacific Northwest Laboratory, Richland, WA, April 1981.

Handin, J. W., and N. L. Carter, "Rheological Properties of Rocks at High Temperatures," Proc. of the Fourth Congress of the International Society for Rock Mechanics, Switzerland, pp. 97-106, 1981.

Heuze, F. E., "Scale Effects in the Determination of Rock Mass Strength and Deformability," Rock Mechanics, Vol. 12, Springer-Verlag, pp. 167-192, 1980.

Ho, D. M., R. L. Sayre, and C. L. Wu, "Suitability of Natural Soils for Foundations for Surface Facilities at the Prospective Yucca Mountain Nuclear Waste Repository," SAND85-7107, prepared by Bechtel National, Inc., for Sandia National Laboratories, Albuquerque, NM, November 1986.

Hustrulid, W., "Lining Considerations for a Circular Vertical Shaft in Generic Tuff," SAND83-7068, prepared for Sandia National Laboratories, Albuquerque, NM, December 1984a.

Hustrulid, W., "Preliminary Stability Analysis for the Exploratory Shaft," SAND83-7069, prepared for Sandia National Laboratories, Albuquerque, NM, December 1984b.

Jaeger, J. C., and N. G. W. Cook, Fundamentals of Rock Mechanics, Methuen Co. Ltd., London, England, 1969.

Johnstone, J. K., R. R. Peters, and P. F. Gnirk, "Unit Evaluation at Yucca Mountain, Nevada Test Site: Summary Report and Recommendation," SAND83-0372, Sandia National Laboratories, Albuquerque, NM, June 1984.

Kathren, R. L., J. M. Selby, and E. J. Vallario, "A Guide to Reducing Radiation Exposure to as Low as Reasonably Achievable (ALARA)," DOE/EV/1830-T5, Pacific Northwest Laboratory, Richland, WA, April 1980.

Lipman, P. W., and E. J. McKay, "Geologic Map of the Topopah Spring SW Quadrangle, Nye County, Nevada," U.S. Geological Survey, Geologic Quadrangle Map GQ-439, 1965.

Lipman, P. W., R. L. Christiansen, and J. T. O'Connor, "A Compositionally Zoned Ash-Flow Sheet in Southern Nevada," USGS-PP-524-F, pp. F1-F47, 1966.

Lipner, M. H., and J. M. Ravets, "Criticality Safety Analyses for the Spent-Fuel Handling and Packaging Program Demonstration," SAND80-1675, Sandia National Laboratories, Albuquerque, NM, April 1980.

Maldonado, F., and S. L. Koether, "Stratigraphy, Structure, and Some Petrographic Features of Tertiary Volcanic Rocks at the USW G-2 Drill Hole, Yucca Mountain, Nye County, Nevada," USGS-OFR-83-732, Denver, CO, 1983.

McKinley, K. B., J. W. Cannon, F. J. Wheeler, and H. A. Worle, "TWTF Project Criticality Task Force Final Review and Assessment," EGG-2055, prepared for U.S. Department of Energy by EG&G, Idaho Falls, ID, November 1980.

Montazer, P., and W. E. Wilson, "Conceptual Hydrologic Model of Flow in the Unsaturated Zone, Yucca Mountain, Nevada," USGS-WRI-84-4345, Lakewood, CO, 1984.

Morrow, C. A., L. Q. Shi, and J. D. Byerlee, "Strain Hardening and Strength of Clay-Rich Fault Gouges," Journal of Geophysical Research, Vol. 87, No. B8, pp. 6771-6780, August 1982.

Morrow, C., and J. Byerlee, "Frictional Sliding and Fracture Behavior of Some Nevada Test Site Tuffs," Proc. of the 25th Symposium on Rock Mechanics, pp. 467-474, 1984.

National Weather Service, "Precipitation Frequency Atlas of Western United States," NOAA Atlas 2, Volume VII, NV, 1974.

National Weather Service, "Probable Maximum Precipitation Estimates, Colorado River and Great Basin Drainages," Hydrometeorological Report No. 49, prepared for U.S. Department of Commerce, National Oceanic and Atmospheric Administration, and U.S. Department of the Army, Corps of Engineers, Silver Spring, MD, September, 1977.

Neal, J. T., "Location Recommendation for Surface Facilities for the Prospective Yucca Mountain Nuclear Waste Repository," SAND84-2015, Sandia National Laboratories, Albuquerque, NM, April 1985.

Nimick, F. B., and R. L. Williams, "A Three-Dimensional Geologic Model of Yucca Mountain, Southern Nevada," SAND83-2593, Sandia National Laboratories, Albuquerque, NM, October 1984.

Nimick, F. B., and B. M. Schwartz, "Bulk, Thermal, and Mechanical Properties of the Topopah Spring Member of the Paintbrush Tuff, Yucca Mountain, Nevada," SAND85-0762, Sandia National Laboratories, Albuquerque, NM, 1987.

NRC (U.S. Nuclear Regulatory Commission), "Information Relevant to Ensuring that Occupational Radiation Exposures at Nuclear Power Stations Will Be As Low As Is Reasonably Achievable," Regulatory Guide 8.8, June 1978.

NRC (U.S. Nuclear Regulatory Commission), "Standards for Protection Against Radiation," Code of Federal Regulations, Energy, Title 10, Part 20, Washington, D.C., January 1986a.

NRC (U.S. Nuclear Regulatory Commission), "Disposal of High-Level Radioactive Wastes in Geologic Repositories," Code of Federal Regulations, Energy, Title 10, Part 60, Washington, D.C., January 1986b.

NRC (U.S. Nuclear Regulatory Commission), "Domestic Licensing of Production and Utilization Facilities," Code of Federal Regulations, Energy, Title 10, Part 50, Appendix B, "Quality Assurance Criteria for Nuclear Power Plants and Fuel Reprocessing Plants," Washington, D.C., January 1986c.

NRC (U.S. Nuclear Regulatory Commission), "Draft Generic Technical Position on Items and Activities in the High-Level Waste Geologic Repository Program Subject to 10 CFR Part 60 Quality Assurance Requirements," Washington, D.C., July 1986d.

NRS (Nevada Revised Statutes), Title 40, Public Health and Safety, Chapter 444, Sanitation, 1986.

NRS (Nevada Revised Statutes), Title 40, Public Health and Safety, Chapter 445, Water Controls; Air Pollution, 1985.

NRS (Nevada Revised Statutes), Title 40, Public Health and Safety, Chapter 459, Hazardous Materials, Radioactive Waste, 1985.

NRS (Nevada Revised Statutes), Title 45, Wildlife, Chapter 501, Administration and Enforcement, 1985.

NRS (Nevada Revised Statutes), Title 46, Mines and Minerals, Chapter 512, Inspection and Safety of Mines, 1985.

NRS (Nevada Revised Statutes), Title 48, Water, Chapter 533, Adjudication of Vested Water Rights; Appropriation of Public Waters, 1986.

NRS (Nevada Revised Statutes), Title 48, Water, Chapter 534, Underground Water and Wells, 1986.

NWPA (Nuclear Waste Policy Act of 1982), Public Law 97-425, 96 Stat. 2201, 42 USC 10101, Washington, D.C., January 1983.

O'Brien, P. D., "Reference Nuclear Waste Descriptions for a Geologic Repository at Yucca Mountain, Nevada," SAND84-1848, Sandia National Laboratories, Albuquerque, NM, September 1985.

Olsson, W. A., "Effects of Elevated Temperature and Pore Pressure on the Mechanical Behavior of Bullfrog Tuff," SAND81-1664, Sandia National Laboratories, Albuquerque, NM, February 1982.

Olsson, W. A., "Rock Joint Compliance Studies," SAND86-0177, Sandia National Laboratories, Albuquerque, NM, April 1987.

Olsson, W. A., and A. K. Jones, "Rock Mechanics Properties of Volcanic Tuffs from the Nevada Test Site," SAND80-1453, Sandia National Laboratories, Albuquerque, NM, November 1980.

O'Neal, W. C., D. W. Gregg, J. N. Hockman, E. W. Russell, and W. Stein, "Preclosure Analysis of Conceptual Waste Package Designs for a Nuclear Waste Repository in Tuff," UCRL-53595, Lawrence Livermore National Laboratory, Livermore, CA, November 1984.

Ortiz, T. S., R. L. Williams, F. B. Nimick, B. C. Whittet, and D. L. South, "A Three-Dimensional Model of Reference Thermal/Mechanical and Hydrological Stratigraphy at Yucca Mountain, Southern Nevada," SAND84-1076, Sandia National Laboratories, Albuquerque, NM, October 1985.

Paterson, M. S., "Experimental Rock Deformation--The Brittle Field," Minerals and Rocks, Volume 13, Springer-Verlag, New York, NY, 1978.

Peters, R. R., E. A. Klavetter, I. J. Hall, S. C. Blair, P. R. Heller, and G. W. Gee, "Fracture and Matrix Hydrologic Characteristics of Tuffaceous Materials from Yucca Mountain, Nye County, Nevada," SAND84-1471, Sandia National Laboratories, Albuquerque, NM, December 1984.

Pippin, L. C., and D. L. Zerga, "Cultural Resources Overview for the Nevada Nuclear Waste Storage Investigations, Nevada Test Site, Nye County, Nevada," NVO-266, prepared by Desert Research Institute for Nevada Operations Office, U.S. Department of Energy, Las Vegas, NV, November 1983.

Pippin, L. C., R. L., Reno, C. Lockett, R. Clerico, J. O. Davis, R. Hughes, and A. J. Dausie, "Limited Test Excavations at Selected Archaeological Sites in the NNWSI Yucca Mountain Project Area, Southern Nye County, Nevada," Social Science Technical Report No. 40, prepared for the U.S. Department of Energy, Nevada Operations Office, Las Vegas, NV, July 1984.

Price, R. H., "Analysis of Rock Mechanics Properties of Volcanic Tuff Units from Yucca Mountain, Nevada Test Site," SAND82-1315, Sandia National Laboratories, Albuquerque, NM, August 1983.

Price, R. H., "Effects of Sample Size on the Mechanical Behavior of Topopah Spring Tuff," SAND85-0709, Sandia National Laboratories, Albuquerque, NM, August 1986.

Price, R. H., and S. J. Bauer, "Analysis of the Elastic and Strength Properties of Yucca Mountain Tuff, Nevada," in Research and Engineering Applications in Rock Masses, Proc. 26th U.S. Symposium on Rock Mechanics, E. Ashworth, ed., A. A. Balkema, Boston, MA, pp. 89-96, June 1985.

Price, R. H., A. K. Jones, and K. G. Nimick, "Uniaxial Compression Test Series on Bullfrog Tuff," SAND82-0481, Sandia National Laboratories, Albuquerque, NM, April 1982.

Price, R. H., F. B. Nimick, J. R. Connolly, K. Keil, B. M. Schwartz, and S. J. Spence, "Preliminary Characterization of the Petrologic, Bulk, and Mechanical Properties of a Lithophysal Zone Within the Topopah Spring Member of the Paintbrush Tuff," SAND84-0860, Sandia National Laboratories, Albuquerque, NM, February 1985.

Reed, J. W., R. L. Sharp, and F. A. Webster, "An Analysis of a Nuclear Test Reactor for Surface Rupture Offset," American Society of Civil Engineers, Spring Convention, Boston, MA, 1979.

Rush, F. E., W. Thordarson, and L. Bruckheimer, "Geohydrologic and Drill-Hole Data for Test Well USW H-1, Adjacent to Nevada Test Site, Nye County, Nevada," USGS-OFR-83-141, 1983.

Sass, J. H., and A. H. Lachenbruch, "Preliminary Interpretation of Thermal Data from the Nevada Test Site," USGS-OFR-82-973, Denver, CO, 1982.

Scholz, C. H., and J. T. Engelder, "The Role of Asperity Indentation and Ploughing in Rock Friction--1. Asperity Creep and Stick-Slip," Int. Journal of Rock Mechanics, Mineral Science & Geomechanical Abstracts, Vol. 13, pp. 149-154, Pergamon Press, 1976.

Scholz, C., P. Molnar, and T. Johnson, "Detailed Studies of Frictional Sliding of Granite and Implications for the Earthquake Mechanism," Journal of Geophysical Research, Vol. 77, No. 32, pp. 6392-6406, November 1972.

Scott, R. B., and J. Bonk, "Preliminary Geologic Map of Yucca Mountain, Nye County, Nevada, with Geologic Sections," USGS-OFR-84-494, Denver, CO, 1984.

Scott, R. B., and M. Castellanos, "Stratigraphic and Structural Relations of Volcanic Rocks in Drill Holes USW GU-3 and USW G-3, Yucca Mountain, Nye County, Nevada," USGS-OFR-84-491, Denver, CO, 1984.

Scott, R. B., R. W. Spengler, S. Diehl, A. R. Lappin, and M. P. Chornack, "Geologic Character of Tuffs in the Unsaturated Zone at Yucca Mountain, Southern Nevada," Role of the Unsaturated Zone in Radioactive and Hazardous Waste Disposal, J. W. Mercer, P. S. C. Rao, and I. W. Marine, eds., Butterworth Publishing Co., Ann Arbor, MI, pp. 289-335, 1983.

Shimamoto, T., and J. M. Logan, "Effects of Simulated Clay Gouges on the Sliding Behavior of Tennessee Sandstone," Tectonophysics, Vol. 75, Elsevier Scientific Publishing Company, Amsterdam, The Netherlands, pp. 243-255, 1981.

Sinnock, S., "Geology of the Nevada Test Site and Nearby Areas, Southern Nevada," SAND82-2207, Sandia National Laboratories, Albuquerque, NM, October 1982.

Sinnock, S., Y. T. Lin, and J. P. Brannen, "Preliminary Bounds on the Expected Postclosure Performance of the Yucca Mountain Repository Site, Southern Nevada," SAND84-1492, Sandia National Laboratories, Albuquerque, NM, December 1984.

Spengler, R. W., and M. P. Chornack, with a Section on Geophysical Logs by D. C. Muller and J. E. Kibler, "Stratigraphic and Structural Characteristics of Volcanic Rocks in Core Hole USW G-4, Yucca Mountain, Nye County, Nevada," USGS-OFR-84-789, Denver, CO, 1984.

Spengler, R. W., and J. G. Rosenbaum, "Preliminary Interpretations of Geological Results Obtained from Boreholes UE25a-4, -5, -6, and -7, Yucca Mountain, Nevada Test Site," USGS OFR-80-929, Denver, CO, 1984.

Spengler, R. W., F. M. Byers, Jr., and J. B. Warner, "Stratigraphy and Structure of Volcanic Rocks in Drill Hole USW-G1, Yucca Mountain, Nye County, Nevada," USGS-OFR-81-1349, 1981.

Squires, R. R., and R. L. Young, "Flood Potential of Fortymile Wash and Its Principal Southwestern Tributaries, Nevada Test Site, Southern Nevada," USGS-WRI-83-4001, Carson City, NV, 1984.

Stein, R., "SCP Q-List Methodology Clarification," memorandum to J. Neff, J. Antonnen, and D. Vieth, U.S. Department of Energy, May 21, 1987.

Stewart, J. H., "Geology of Nevada, A Discussion to Accompany the Geologic Map of Nevada," Special Publication No. 4, Nevada Bureau of Mines and Geology, University of Nevada, Reno, NV, 1980.

Stock, J. M., J. H. Healy, and S. H. Hickman, "Report on Televiewer Log and Stress Measurements in Core Hole USW G-2, Nevada Test Site," USGS-OFR-84-172, Menlo Park, CA, 1984.

Stock, J. M., J. H. Healy, S. H. Hickman, and M. D. Zoback, "Hydraulic Fracturing Stress Measurements at Yucca Mountain, Nevada, and Relationship to the Regional Stress Field," Journal of Geophysical Research, Vol. 90, No. B10, pp. 8691-8706, September 1985.

Swadley, W. C., D. L. Hoover, and J. N. Rosholt, "Preliminary Report on Late Cenozoic Faulting and Stratigraphy in the Vicinity of Yucca Mountain, Nye County, Nevada," USGS-OFR-84-788, Denver, CO, 1984.

Teufel, L. W., "Frictional Properties of Jointed Welded Tuff," SAND81-0212, Sandia National Laboratories, Albuquerque, NM, July 1981.

Teufel, L. W., and J. M. Logan, "Effect of Displacement Rate on the Real Area of Contact and Temperatures Generated During Frictional Sliding of Tennessee Sandstone," Pageoph (Pure and Applied Geophysics), Vol. 116, pp. 840-864, 1978.

Thomas, R. K., "A Continuum Description for Jointed Media," SAND81-2615, Sandia National Laboratories, Albuquerque, NM, April 1982.

Thordarson W., "Perched Ground Water in Zeolitized-Bedded Tuff, Rainier Mesa and Vicinity, Nevada Test Site, Nevada," USGS-TEI-862, Denver, CO, 1965.

URS/J. A. Blume & Associates, "Review of Seismic Studies for the Prospective Yucca Mountain Nuclear Waste Repository," SAND83-7458, Sandia National Laboratories, Albuquerque, NM, December 1985.

URS/J. A. Blume & Associates, "Ground Motion Evaluations at Yucca Mountain, Nevada, with Applications to Repository Conceptual Design and Siting," SAND85-7104, prepared for Sandia National Laboratories, Albuquerque, NM, February 1986.

URS/J. A. Blume & Associates, "Technical Basis and Parametric Study of Ground Motion and Surface Rupture Hazard Evaluations at Yucca Mountain, Nevada," SAND86-7013, prepared for Sandia National Laboratories, Albuquerque, NM, 1987.

USGS (U.S. Geological Survey), "A Summary of Geologic Studies Through January 1, 1983, of a Potential High-Level Radioactive Waste Repository Site at Yucca Mountain, Southern Nye County, Nevada," compiled by the USGS, USGS-OFR-84-792, Menlo Park, CA, 1984.

Waddell, R. K., "Two-Dimensional, Steady-State Model of Ground-Water Flow, Nevada Test Site and Vicinity, Nevada-California," USGS-WRI-82-4085, Denver, CO, 1982.

Waddell, R. K., J. H. Robison, and R. K. Blankennagel, "Hydrology of Yucca Mountain and Vicinity, Nevada-California--Investigative Results Through Mid-1983," USGS-WRI-84-4267, 1984.

Weren, B. H., M. A. Capo, and W. C. O'Neal, "Nuclear Criticality Safety Analysis of a Spent Fuel Waste Package in a Tuff Repository," UCRL-15575, Lawrence Livermore National Laboratory, Livermore, CA, December 1983.

Winograd, I. J., and W. Thordarson, "Hydrogeologic and Hydrochemical Framework, South-Central Great Basin, Nevada-California, with Special Reference to the Nevada Test Site," USGS-PP-712-C, Washington, D.C., 1975.

Zimmerman, R. M., M. P. Board, E. L. Hardin, and M. D. Voegele, "Ambient Temperature Testing of the G-Tunnel Heated Block," SAND83-2287C, Sandia National Laboratories, Albuquerque, NM, June 1984.

Zongqi, S., "Fracture Mechanics and Tribology of Rocks and Rock Joints," Doctoral Thesis, Division of Rock Mechanics, University of Sweden, 1983.

3.0 REPOSITORY

This chapter provides a complete overview of the principal concepts for operations performed at the repository, including underground development, waste handling and emplacement, and waste retrieval. Figure 3-1 gives the preliminary schedule of repository operations. Descriptions are provided for the systems and equipment needed to perform these operations, and the system concepts and equipment that require development are identified.

The schedule of operations presented in this report is based on the reference schedule and possible schedule durations provided by the Department of Energy's (DOE) "Mission Plan for the Civilian Radioactive Waste Management Program" (DOE, 1985), the "Generic Requirements for a Mined Geologic Disposal System" (DOE, 1984; DOE, 1986, Appendix D), and "Retrievability: Strategy for Compliance Demonstration" (Flores, 1986). A new waste acceptance schedule is presented in the Draft Mission Plan Amendment (DOE, 1987). This schedule will be used as a basis for the advanced conceptual design (ACD). It is not expected that the new schedule will have any significant impact on the plans for site characterization (Stein, 1987).

To meet the 1998 deadline for receiving spent fuel, as required by the Nuclear Waste Policy Act (NWPA) of 1982, the DOE has elected to construct and operate the repository in two stages (DOE, 1985). It is estimated that construction and testing of the first waste-handling building (WHB-1) for Stage 1 operations and the construction of the emplacement area will require 53 mo. The second waste-handling building (WHB-2) will require 90 mo (DOE, 1985).

WHB-1 is scheduled to receive commercial spent fuel in January 1998, and receipt will continue for 3 yr at a rate of 400 metric tons of uranium per year (MTU/yr) (Table 3-1). WHB-2 is scheduled to begin operations in 2001 with an initial receipt of spent fuel equivalent to 500 MTU (Table 3-1). The combined receipts of WHB-1 and WHB-2 will continue to increase until the full processing capacity of the repository has been reached.

During the first 2 yr of Stage 2 operations, spent fuel will be handled in both WHB-1 and WHB-2. WHB-1 will be used for preparing defense high-level waste (DHLW) and West Valley high-level waste (WVHLW) for disposal at a rate equivalent to 400 MTU/yr. The cumulative total of DHLW and WVHLW to be handled at WHB-1 is equivalent to 8,000 MTU.

WHB-2 will reach its full capacity for receiving, consolidating, and packaging spent fuel at a rate of 3,000 MTU/yr in the sixth year after spent fuel is initially received at the repository. The total design rate for waste packaged at both WHB-1 and WHB-2 is 3,400 MTU/yr. The design capacity of the repository is 70,000 MTU.

Caretaker operations begin with the emplacement of the last waste package and are scheduled to continue through completion of the performance confirmation program and Nuclear Regulatory Commission (NRC) review of the license amendment for permanent closure. The caretaker period lasts 25 yr (Figure 3-1). During this period, personnel will be reduced

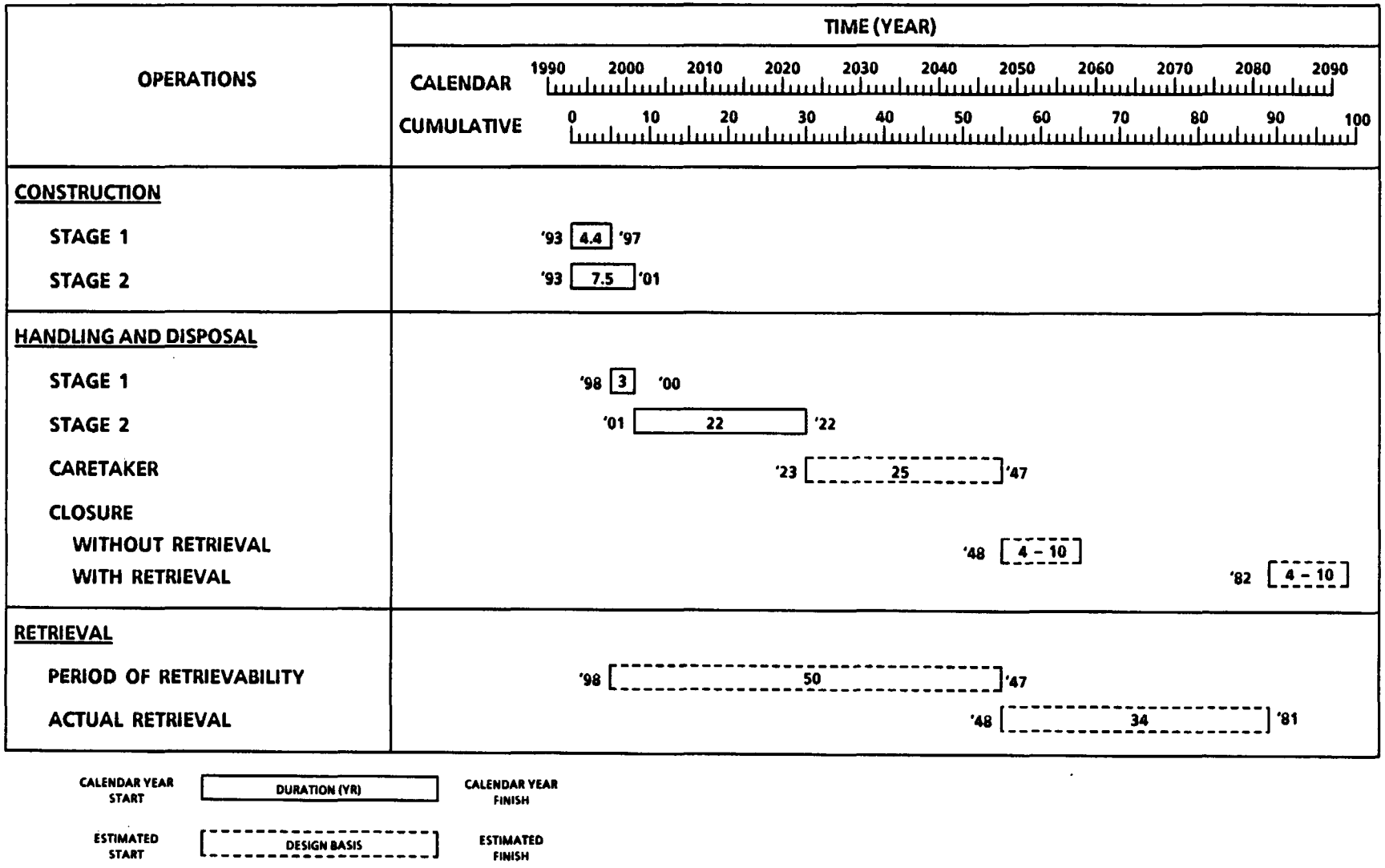

Figure 3-1. Schedule of Repository Construction and Operation (Figure prepared for the SCP-CDR.)

TABLE 3-1

WASTE ACCEPTANCE SCHEDULE[a,b]

Year	Facilities WHB-1	Facilities WHB-2	Waste Type: Spent Fuel	Waste Type: High-Level Waste[c,d]	Total	Cumulative Total
1998	400		400		400	400
1999	400		400		400	800
2000	400		400		400	1,200
2001	400	500	900		900	2,100
2002	400	1,400	1,800		1,800	3,900
2003	400	3,000	3,000	400	3,400	7,300
2004	400	3,000	3,000	400	3,400	10,700
2005	400	3,000	3,000	400	3,400	14,100
2006	400	3,000	3,000	400	3,400	17,500
2007	400	3,000	3,000	400	3,400	20,900
2008	400	3,000	3,000	400	3,400	24,300
2009	400	3,000	3,000	400	3,400	27,700
2010	400	3,000	3,000	400	3,400	31,100
2011	400	3,000	3,000	400	3,400	34,500
2012	400	3,000	3,000	400	3,400	37,900
2013	400	3,000	3,000	400	3,400	41,300
2014	400	3,000	3,000	400	3,400	44,700
2015	400	3,000	3,000	400	3,400	48,100
2016	400	3,000	3,000	400	3,400	51,500
2017	400	3,000	3,000	400	3,400	54,900
2018	400	3,000	3,000	400	3,400	58,300
2019	400	3,000	3,000	400	3,400	61,700
2020	400	3,000	3,000	400	3,400	65,100
2021	400	3,000	3,000	400	3,400	68,500
2022	400	1,100	1,100	400	1,500	70,000
TOTAL	10,000	60,000	62,000	8,000		70,000

a. DOE (1985).
b. Numbers indicate metric tons of uranium per year.
c. Approximate waste acceptance rates for defense high-level waste (DHLW) and West Valley high-level waste (WVHLW) have been normalized to MTU on a curie-equivalent basis. Direct comparison with spent fuel is not possible because DHLW and WVHLW result from the reprocessing of spent fuel. Actual acceptance rates are to be negotiated by the Offices of Civilian Radioactive Waste Management and Defense Programs in the DOE.
d. The first repository is currently designed to begin operating in two stages. This example shows the acceptance of DHLW and WVHLW beginning when the second stage reaches its maximum receipt rate.

to the number of people necessary to maintain the repository for implementation of the performance confirmation program. Permanent closure, when the surface facilities are decommissioned and the underground accesses are

sealed, will begin (for design purposes) either after the caretaker period or after waste retrieval. Closure operations will require approximately 4 yr for the horizontal emplacement configuration or 10 yr for the vertical emplacement configuration.

For design purposes, the period of retrievability is a maximum of 50 yr after initiation of waste emplacement. This period begins when the first waste is emplaced and lasts through the completion of the performance confirmation program. For design purposes, it is assumed that the time period required to retrieve all waste packages, actual retrieval, is approximately equal to the construction period (6 yr), plus the emplacement period (28 yr), for a total of 34 yr (DOE, 1984; Flores, 1986).

3.1 Waste Handling and Disposal

This section describes the current concepts for the receiving, preparation, storage, and emplacement operations for spent fuel and high-level waste. In addition, this section contains block flow diagrams showing the principal functions, conceptual mechanical flow diagrams showing the equipment used in the operations, and lists of the major pieces of equipment identified in the flow diagrams.

3.1.1 Waste Handling in Surface Facilities

The waste-handling facilities on the surface are designed to handle the numbers of railroad and truck casks and the quantities of pressurized-water reactor (PWR) and boiling-water reactor (BWR) fuel assemblies or DHLW and WVHLW canisters associated with the waste acceptance schedule given in Table 3-1 (O'Brien, 1985). These numbers are summarized in Table 3-2, which has been developed from the design basis for waste provided in Section 2.1. The number of shipping casks presented is based on the assumption that some fuel is consolidated at reactors (O'Brien, 1985).

Figures 3-2 and 3-3 are material block flow diagrams for WHB-1 during Stage 1 and Stage 2 operations, respectively. Figure 3-4 presents the block flow diagram for WHB-2 during Stage 2 operations. These block flow diagrams describe the logic sequence for the normal waste-handling operations to be performed in the surface facilities. Off-normal operations, such as the handling of failed fuel assemblies, have not been included but will be described in detail during future design activities. Figure 3-5 is the mechanical flow diagram of normal waste-handling operations in WHB-1. Figures 3-6 through 3-9 are the mechanical flow diagrams of the waste-handling operations in WHB-2. These mechanical flow diagrams identify the major waste-handling equipment and describe the sequences of equipment operations in the surface facilities. The operations concepts are discussed below.

3.1.1.1 Receiving

Waste shipped to the repository in truck or rail casks is inspected at the gate of the waste-receiving and inspection area (Dennis et al., 1984a and 1984b). After this preliminary inspection, the shipping cask is moved into the receiving and inspection area by the carrier.

TABLE 3-2

WASTE RECEIPT SCHEDULE FOR
SPENT FUEL ASSEMBLIES AND SHIPPING CASKS[a]

Year	DHLW/ WVHLW (MTU)	PWR MTU	PWR Assemblies	BWR MTU	BWR Assemblies	Shipping Casks[b] Spent Fuel Rail	Spent Fuel Truck	DHLW/WVHLW Rail	DHLW/WVHLW Truck
1998	0	240	520	160	873	18	304	0	0
1999	0	240	520	160	873	18	304	0	0
2000	0	240	520	160	873	18	304	0	0
2001	0	540	1,170	360	1,964	41	685	0	0
2002	0	1,080	2,340	720	3,928	83	1,369	0	0
2003	400	1,800	3,901	1,200	6,547	139	2,282	0	194[c]
2004	400	1,800	3,901	1,200	6,547	139	2,282	0	436[c]
2005	400	1,800	3,901	1,200	6,547	139	2,282	0	800
2006	400	1,800	3,901	1,200	6,547	139	2,282	0	800
2007	400	1,800	3,901	1,200	6,547	139	2,282	0	800
2008	400	1,800	3,901	1,200	6,547	139	2,282	0	800
2009	400	1,800	3,901	1,200	6,547	139	2,282	0	800
2010	400	1,800	3,901	1,200	6,547	139	2,282	0	800
2011	400	1,800	3,901	1,200	6,547	139	2,282	0	800
2012	400	1,800	3,901	1,200	6,547	139	2,282	0	800
2013	400	1,800	3,901	1,200	6,547	139	2,282	0	800
2014	400	1,800	3,901	1,200	6,547	139	2,282	0	800
2015	400	1,800	3,901	1,200	6,547	139	2,282	0	800
2016	400	1,800	3,901	1,200	6,547	139	2,282	0	800
2017	400	1,800	3,901	1,200	6,547	139	2,282	0	800
2018	400	1,800	3,901	1,200	6,547	139	2,282	0	800
2019	400	1,800	3,901	1,200	6,547	139	2,282	0	800
2020	400	1,800	3,901	1,200	6,547	139	2,282	0	800
2021	400	1,800	3,901	1,200	6,547	139	2,282	0	800
2022	400	660	1,430	440	2,400	51	837	0	800
TOTAL	8,000	37,200	80,619	24,800	135,304	2,870	47,161	0	15,030

a. Data from O'Brien (1985).
b. Assumes 1/2 MTU per canister of DHLW/WVHLW and 1 canister per truck cask.
c. Assumes WVHLW consists of 640 MTU in 310 canisters.

The casks and carrier undergo complete radiological surveys and security-related inspections. Onsite transportation vehicles move the casks into the surface portion of the waste operations area. Truck trailers or railcars can be cleaned in the washdown facility, if necessary; then the cask is transferred to the waste-handling buildings or to the designated parking area (Figures 3-2, 3-3, and 3-4).

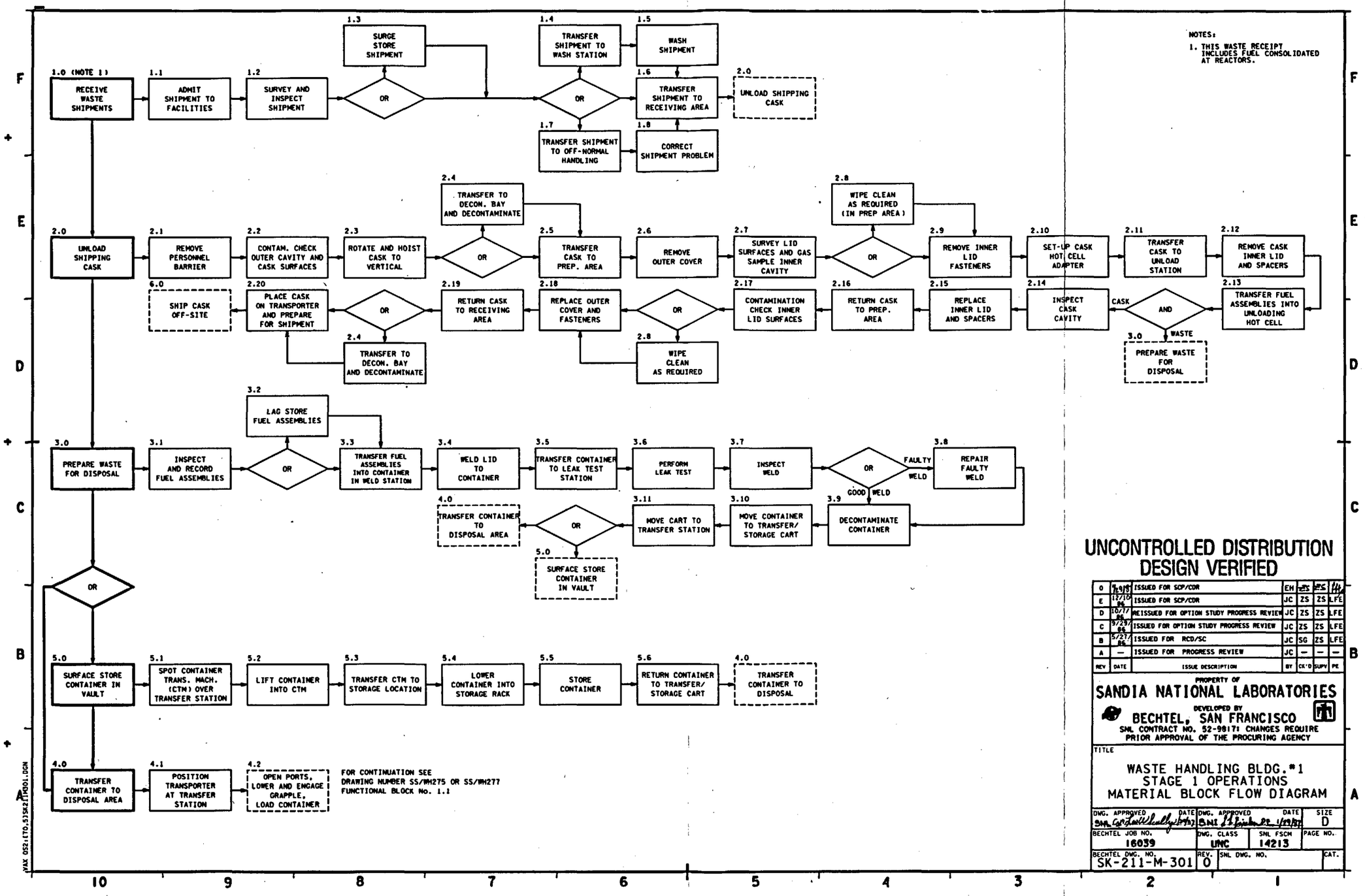
NOTES:
1. THIS WASTE RECEIPT INCLUDES FUEL CONSOLIDATED AT REACTORS.
1.0 (NOTE 1) RECEIVE WASTE SHIPMENTS
1.1 ADMIT SHIPMENT TO FACILITIES
1.2 SURVEY AND INSPECT SHIPMENT
OR
1.3 SURGE STORE SHIPMENT
1.4 TRANSFER SHIPMENT TO WASH STATION
1.5 WASH SHIPMENT
1.6 TRANSFER SHIPMENT TO RECEIVING AREA
2.0 UNLOAD SHIPPING CASK
1.7 TRANSFER SHIPMENT TO OFF-NORMAL HANDLING
1.8 CORRECT SHIPMENT PROBLEM
2.0 UNLOAD SHIPPING CASK
2.1 REMOVE PERSONNEL BARRIER
2.2 CONTAM. CHECK OUTER CAVITY AND CASK SURFACES
2.3 ROTATE AND HOIST CASK TO VERTICAL
2.4 TRANSFER TO DECON. BAY AND DECONTAMINATE
2.5 TRANSFER CASK TO PREP. AREA
2.6 REMOVE OUTER COVER
2.7 SURVEY LID SURFACES AND GAS SAMPLE INNER CAVITY
2.8 WIPE CLEAN AS REQUIRED (IN PREP AREA)
2.9 REMOVE INNER LID FASTENERS
2.10 SET-UP CASK HOT CELL ADAPTER
2.11 TRANSFER CASK TO UNLOAD STATION
2.12 REMOVE CASK INNER LID AND SPACERS
2.13 TRANSFER FUEL ASSEMBLIES INTO UNLOADING HOT CELL
CASK AND WASTE
3.0 PREPARE WASTE FOR DISPOSAL
2.14 INSPECT CASK CAVITY
2.15 REPLACE INNER LID AND SPACERS
2.16 RETURN CASK TO PREP. AREA
2.17 CONTAMINATION CHECK INNER LID SURFACES
2.18 REPLACE OUTER COVER AND FASTENERS
2.19 RETURN CASK TO RECEIVING AREA
2.20 PLACE CASK ON TRANSPORTER AND PREPARE FOR SHIPMENT
6.0 SHIP CASK OFF-SITE
2.4 TRANSFER TO DECON. BAY AND DECONTAMINATE
2.8 WIPE CLEAN AS REQUIRED
3.0 PREPARE WASTE FOR DISPOSAL
3.1 INSPECT AND RECORD FUEL ASSEMBLIES
3.2 LAG STORE FUEL ASSEMBLIES
3.3 TRANSFER FUEL ASSEMBLIES INTO CONTAINER IN WELD STATION
3.4 WELD LID TO CONTAINER
3.5 TRANSFER CONTAINER TO LEAK TEST STATION
3.6 PERFORM LEAK TEST
3.7 INSPECT WELD
FAULTY WELD
3.8 REPAIR FAULTY WELD
GOOD WELD
3.9 DECONTAMINATE CONTAINER
3.10 MOVE CONTAINER TO TRANSFER/ STORAGE CART
3.11 MOVE CART TO TRANSFER STATION
4.0 TRANSFER CONTAINER TO DISPOSAL AREA
5.0 SURFACE STORE CONTAINER IN VAULT
5.0 SURFACE STORE CONTAINER IN VAULT
5.1 SPOT CONTAINER TRANS. MACH. (CTM) OVER TRANSFER STATION
5.2 LIFT CONTAINER INTO CTM
5.3 TRANSFER CTM TO STORAGE LOCATION
5.4 LOWER CONTAINER INTO STORAGE RACK
5.5 STORE CONTAINER
5.6 RETURN CONTAINER TO TRANSFER/ STORAGE CART
4.0 TRANSFER CONTAINER TO DISPOSAL
4.0 TRANSFER CONTAINER TO DISPOSAL AREA
4.1 POSITION TRANSPORTER AT TRANSFER STATION
4.2 OPEN PORTS, LOWER AND ENGAGE GRAPPLE, LOAD CONTAINER
FOR CONTINUATION SEE DRAWING NUMBER SS/WH275 OR SS/WH277 FUNCTIONAL BLOCK No. 1.1
UNCONTROLLED DISTRIBUTION
DESIGN VERIFIED
REV DATE ISSUE DESCRIPTION BY CK'D SUPV PE
0 ISSUED FOR SCP/CDR EH ZS ZS
E 12/10/86 ISSUED FOR SCP/CDR JC ZS ZS LFE
D 10/17/86 REISSUED FOR OPTION STUDY PROGRESS REVIEW JC ZS ZS LFE
C 9/29/86 ISSUED FOR OPTION STUDY PROGRESS REVIEW JC ZS ZS LFE
B 5/27/86 ISSUED FOR RCD/SC JC SG ZS LFE
A — ISSUED FOR PROGRESS REVIEW JC — — —
PROPERTY OF
SANDIA NATIONAL LABORATORIES
DEVELOPED BY
BECHTEL, SAN FRANCISCO
SNL CONTRACT NO. 52-9817: CHANGES REQUIRE PRIOR APPROVAL OF THE PROCURING AGENCY
TITLE
WASTE HANDLING BLDG.#1
STAGE 1 OPERATIONS
MATERIAL BLOCK FLOW DIAGRAM
DWG. APPROVED DATE
DWG. APPROVED DATE
SIZE D
BECHTEL JOB NO. 16039
DWG. CLASS UNC
SNL FSCM 14213
PAGE NO.
BECHTEL DWG. NO. SK-211-M-301
REV. 0
SNL DWG. NO.
CAT.
VAX GS2:[TO.SISK2]TVD01.DGN

Figure 3-2.

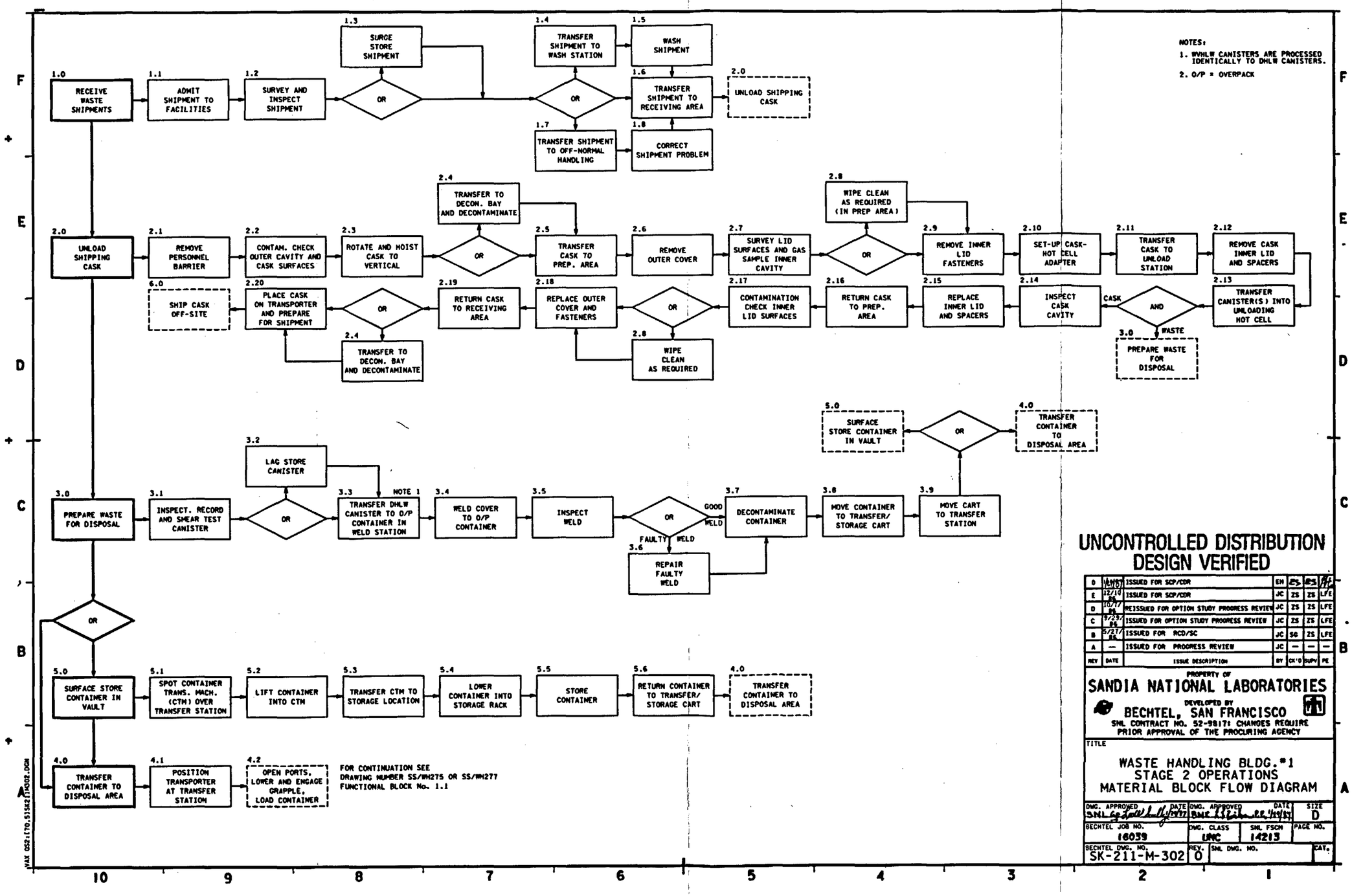
NOTES:
1. WVHLW CANISTERS ARE PROCESSED IDENTICALLY TO DHLW CANISTERS.
2. O/P = OVERPACK
1.0 RECEIVE WASTE SHIPMENTS
1.1 ADMIT SHIPMENT TO FACILITIES
1.2 SURVEY AND INSPECT SHIPMENT
OR
1.3 SURGE STORE SHIPMENT
1.4 TRANSFER SHIPMENT TO WASH STATION
1.5 WASH SHIPMENT
OR
1.6 TRANSFER SHIPMENT TO RECEIVING AREA
2.0 UNLOAD SHIPPING CASK
1.7 TRANSFER SHIPMENT TO OFF-NORMAL HANDLING
1.8 CORRECT SHIPMENT PROBLEM
2.0 UNLOAD SHIPPING CASK
2.1 REMOVE PERSONNEL BARRIER
2.2 CONTAM. CHECK OUTER CAVITY AND CASK SURFACES
2.3 ROTATE AND HOIST CASK TO VERTICAL
OR
2.4 TRANSFER TO DECON. BAY AND DECONTAMINATE
2.5 TRANSFER CASK TO PREP. AREA
2.6 REMOVE OUTER COVER
2.7 SURVEY LID SURFACES AND GAS SAMPLE INNER CAVITY
OR
2.8 WIPE CLEAN AS REQUIRED (IN PREP AREA)
2.9 REMOVE INNER LID FASTENERS
2.10 SET-UP CASK-HOT CELL ADAPTER
2.11 TRANSFER CASK TO UNLOAD STATION
2.12 REMOVE CASK INNER LID AND SPACERS
2.13 TRANSFER CANISTER(S) INTO UNLOADING HOT CELL
CASK
AND
WASTE
3.0 PREPARE WASTE FOR DISPOSAL
2.14 INSPECT CASK CAVITY
2.15 REPLACE INNER LID AND SPACERS
2.16 RETURN CASK TO PREP. AREA
2.17 CONTAMINATION CHECK INNER LID SURFACES
OR
2.8 WIPE CLEAN AS REQUIRED
2.18 REPLACE OUTER COVER AND FASTENERS
2.19 RETURN CASK TO RECEIVING AREA
OR
2.20 PLACE CASK ON TRANSPORTER AND PREPARE FOR SHIPMENT
2.4 TRANSFER TO DECON. BAY AND DECONTAMINATE
6.0 SHIP CASK OFF-SITE
3.0 PREPARE WASTE FOR DISPOSAL
3.1 INSPECT. RECORD AND SMEAR TEST CANISTER
OR
3.2 LAG STORE CANISTER
3.3 TRANSFER DHLW CANISTER TO O/P CONTAINER IN WELD STATION
NOTE 1
3.4 WELD COVER TO O/P CONTAINER
3.5 INSPECT WELD
OR
GOOD WELD
FAULTY WELD
3.6 REPAIR FAULTY WELD
3.7 DECONTAMINATE CONTAINER
3.8 MOVE CONTAINER TO TRANSFER/ STORAGE CART
3.9 MOVE CART TO TRANSFER STATION
OR
5.0 SURFACE STORE CONTAINER IN VAULT
4.0 TRANSFER CONTAINER TO DISPOSAL AREA
OR
5.0 SURFACE STORE CONTAINER IN VAULT
5.1 SPOT CONTAINER TRANS. MACH. (CTM) OVER TRANSFER STATION
5.2 LIFT CONTAINER INTO CTM
5.3 TRANSFER CTM TO STORAGE LOCATION
5.4 LOWER CONTAINER INTO STORAGE RACK
5.5 STORE CONTAINER
5.6 RETURN CONTAINER TO TRANSFER/ STORAGE CART
4.0 TRANSFER CONTAINER TO DISPOSAL AREA
4.0 TRANSFER CONTAINER TO DISPOSAL AREA
4.1 POSITION TRANSPORTER AT TRANSFER STATION
4.2 OPEN PORTS, LOWER AND ENGAGE GRAPPLE, LOAD CONTAINER
FOR CONTINUATION SEE DRAWING NUMBER SS/WH275 OR SS/WH277 FUNCTIONAL BLOCK No. 1.1
UNCONTROLLED DISTRIBUTION
DESIGN VERIFIED
D 1/9/87 ISSUED FOR SCP/CDR EM ZS ZS
E 12/10/86 ISSUED FOR SCP/CDR JC ZS ZS LFE
D 10/7/86 REISSUED FOR OPTION STUDY PROGRESS REVIEW JC ZS ZS LFE
C 9/29/86 ISSUED FOR OPTION STUDY PROGRESS REVIEW JC ZS ZS LFE
B 5/27/86 ISSUED FOR RCD/SC JC SG ZS LFE
A — ISSUED FOR PROGRESS REVIEW JC — — —
REV DATE ISSUE DESCRIPTION BY CK'D SUPV PE
PROPERTY OF
SANDIA NATIONAL LABORATORIES
DEVELOPED BY
BECHTEL, SAN FRANCISCO
SNL CONTRACT NO. 52-98171 CHANGES REQUIRE PRIOR APPROVAL OF THE PROCURING AGENCY
TITLE
WASTE HANDLING BLDG.#1
STAGE 2 OPERATIONS
MATERIAL BLOCK FLOW DIAGRAM
DWG. APPROVED SNL DATE
DWG. APPROVED BMK DATE
SIZE D
BECHTEL JOB NO. 16039
DWG. CLASS UNC
SNL FSCN 14213
PAGE NO.
BECHTEL DWG. NO. SK-211-M-302
REV. 0
SNL DWG. NO.
CAT.
VAX GS2:[TO.51SK2]TMSOR.DGN

Figure 3-3.

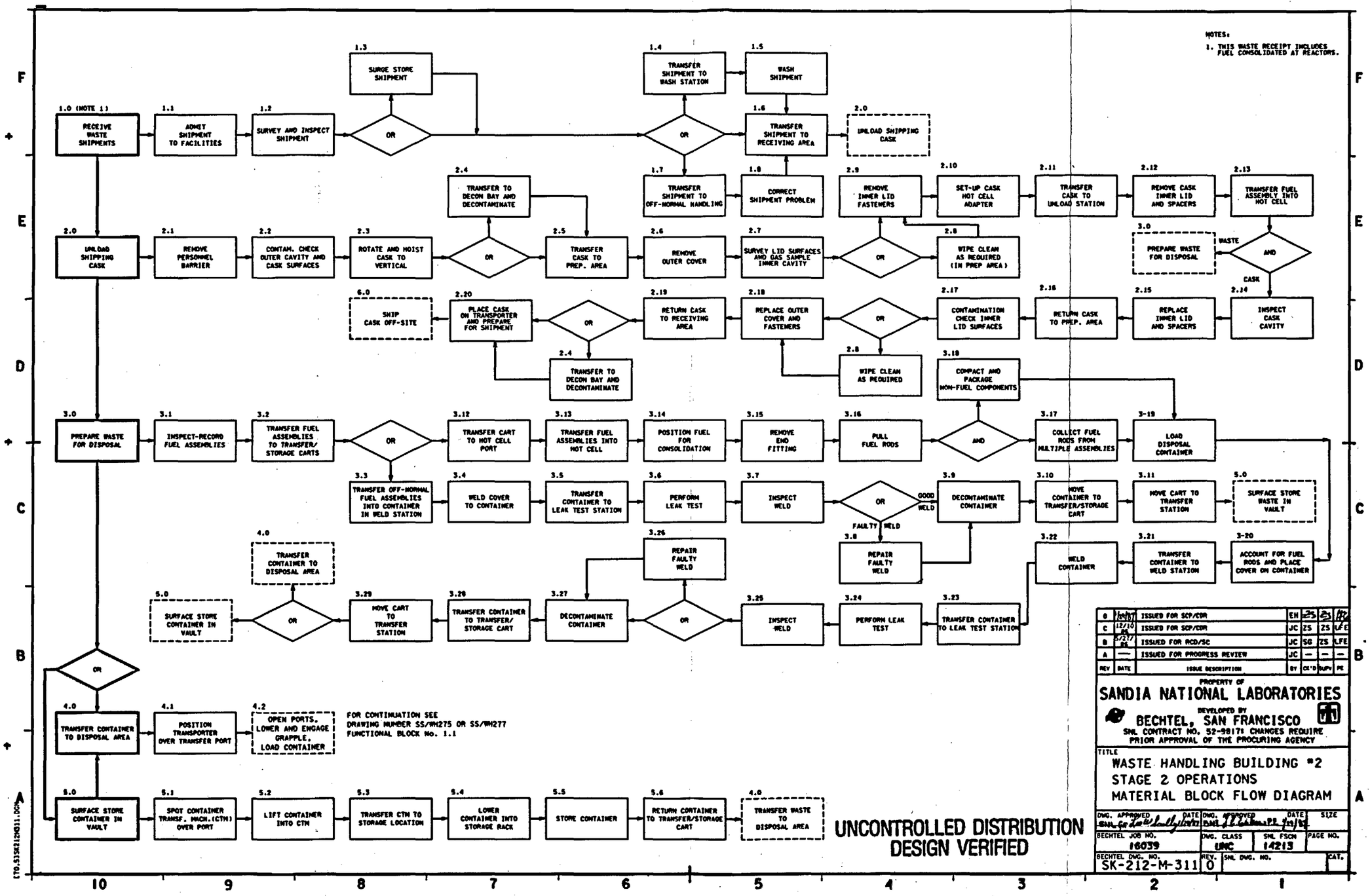
NOTES:
1. THIS WASTE RECEIPT INCLUDES FUEL CONSOLIDATED AT REACTORS.
1.0 (NOTE 1) RECEIVE WASTE SHIPMENTS
1.1 ADMIT SHIPMENT TO FACILITIES
1.2 SURVEY AND INSPECT SHIPMENT
OR
1.3 SURGE STORE SHIPMENT
1.4 TRANSFER SHIPMENT TO WASH STATION
1.5 WASH SHIPMENT
OR
1.6 TRANSFER SHIPMENT TO RECEIVING AREA
2.0 UNLOAD SHIPPING CASK
1.7 TRANSFER SHIPMENT TO OFF-NORMAL HANDLING
1.8 CORRECT SHIPMENT PROBLEM
2.0 UNLOAD SHIPPING CASK
2.1 REMOVE PERSONNEL BARRIER
2.2 CONTAM. CHECK OUTER CAVITY AND CASK SURFACES
2.3 ROTATE AND HOIST CASK TO VERTICAL
OR
2.4 TRANSFER TO DECON BAY AND DECONTAMINATE
2.5 TRANSFER CASK TO PREP. AREA
2.6 REMOVE OUTER COVER
2.7 SURVEY LID SURFACES AND GAS SAMPLE INNER CAVITY
OR
2.9 REMOVE INNER LID FASTENERS
2.8 WIPE CLEAN AS REQUIRED (IN PREP AREA)
2.10 SET-UP CASK HOT CELL ADAPTER
2.11 TRANSFER CASK TO UNLOAD STATION
2.12 REMOVE CASK INNER LID AND SPACERS
2.13 TRANSFER FUEL ASSEMBLY INTO HOT CELL
3.0 PREPARE WASTE FOR DISPOSAL
WASTE
AND
CASK
2.14 INSPECT CASK CAVITY
2.15 REPLACE INNER LID AND SPACERS
2.16 RETURN CASK TO PREP. AREA
2.17 CONTAMINATION CHECK INNER LID SURFACES
OR
2.8 WIPE CLEAN AS REQUIRED
2.18 REPLACE OUTER COVER AND FASTENERS
2.19 RETURN CASK TO RECEIVING AREA
OR
2.20 PLACE CASK ON TRANSPORTER AND PREPARE FOR SHIPMENT
6.0 SHIP CASK OFF-SITE
2.4 TRANSFER TO DECON BAY AND DECONTAMINATE
3.0 PREPARE WASTE FOR DISPOSAL
3.1 INSPECT-RECORD FUEL ASSEMBLIES
3.2 TRANSFER FUEL ASSEMBLIES TO TRANSFER/ STORAGE CARTS
OR
3.12 TRANSFER CART TO HOT CELL PORT
3.13 TRANSFER FUEL ASSEMBLIES INTO HOT CELL
3.14 POSITION FUEL FOR CONSOLIDATION
3.15 REMOVE END FITTING
3.16 PULL FUEL RODS
3.18 COMPACT AND PACKAGE NON-FUEL COMPONENTS
AND
3.17 COLLECT FUEL RODS FROM MULTIPLE ASSEMBLIES
3-19 LOAD DISPOSAL CONTAINER
3.3 TRANSFER OFF-NORMAL FUEL ASSEMBLIES INTO CONTAINER IN WELD STATION
3.4 WELD COVER TO CONTAINER
3.5 TRANSFER CONTAINER TO LEAK TEST STATION
3.6 PERFORM LEAK TEST
3.7 INSPECT WELD
OR
GOOD WELD
FAULTY WELD
3.9 DECONTAMINATE CONTAINER
3.10 MOVE CONTAINER TO TRANSFER/STORAGE CART
3.11 MOVE CART TO TRANSFER STATION
5.0 SURFACE STORE WASTE IN VAULT
3.8 REPAIR FAULTY WELD
3.22 WELD CONTAINER
3.21 TRANSFER CONTAINER TO WELD STATION
3-20 ACCOUNT FOR FUEL RODS AND PLACE COVER ON CONTAINER
3.26 REPAIR FAULTY WELD
4.0 TRANSFER CONTAINER TO DISPOSAL AREA
5.0 SURFACE STORE CONTAINER IN VAULT
OR
3.29 MOVE CART TO TRANSFER STATION
3.28 TRANSFER CONTAINER TO TRANSFER/ STORAGE CART
3.27 DECONTAMINATE CONTAINER
OR
3.25 INSPECT WELD
3.24 PERFORM LEAK TEST
3.23 TRANSFER CONTAINER TO LEAK TEST STATION
OR
4.0 TRANSFER CONTAINER TO DISPOSAL AREA
4.1 POSITION TRANSPORTER OVER TRANSFER PORT
4.2 OPEN PORTS, LOWER AND ENGAGE GRAPPLE, LOAD CONTAINER
FOR CONTINUATION SEE DRAWING NUMBER SS/WH275 OR SS/WH277 FUNCTIONAL BLOCK No. 1.1
5.0 SURFACE STORE CONTAINER IN VAULT
5.1 SPOT CONTAINER TRANSF. MACH.(CTM) OVER PORT
5.2 LIFT CONTAINER INTO CTM
5.3 TRANSFER CTM TO STORAGE LOCATION
5.4 LOWER CONTAINER INTO STORAGE RACK
5.5 STORE CONTAINER
5.6 RETURN CONTAINER TO TRANSFER/STORAGE CART
4.0 TRANSFER WASTE TO DISPOSAL AREA
UNCONTROLLED DISTRIBUTION
DESIGN VERIFIED
REV DATE ISSUE DESCRIPTION BY CK'D SUPV PE
0 ISSUED FOR SCP/CDR EH ZS ZS
C 12/10/86 ISSUED FOR SCP/CDR JC ZS ZS LFE
B 5/27/86 ISSUED FOR RCD/SC JC SG ZS LFE
A — ISSUED FOR PROGRESS REVIEW JC — — —
PROPERTY OF
SANDIA NATIONAL LABORATORIES
DEVELOPED BY
BECHTEL, SAN FRANCISCO
SNL CONTRACT NO. 52-9817: CHANGES REQUIRE PRIOR APPROVAL OF THE PROCURING AGENCY
TITLE
WASTE HANDLING BUILDING #2
STAGE 2 OPERATIONS
MATERIAL BLOCK FLOW DIAGRAM
DWG. APPROVED DATE
DWG. APPROVED DATE
SIZE
BECHTEL JOB NO. 16039
DWG. CLASS UNC
SNL FSCN 14213
PAGE NO.
BECHTEL DWG. NO. SK-212-M-311
REV. 0
SNL DWG. NO.
CAT.
[70.S3S3125311.DCN]

Figure 3-4.

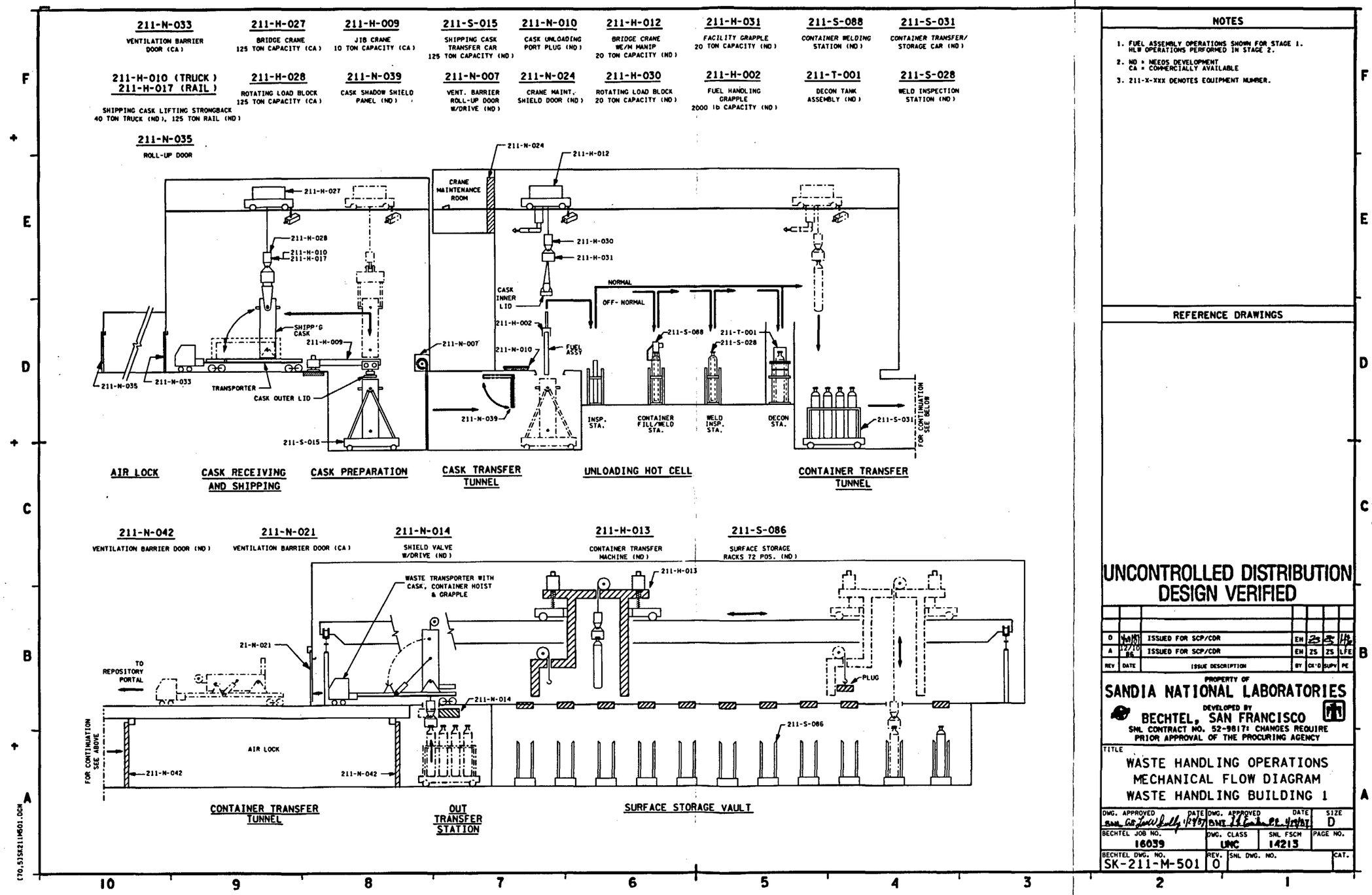
211-N-033
VENTILATION BARRIER DOOR (CA)
211-H-027
BRIDGE CRANE 125 TON CAPACITY (CA)
211-H-009
JIB CRANE 10 TON CAPACITY (CA)
211-S-015
SHIPPING CASK TRANSFER CAR 125 TON CAPACITY (ND)
211-N-010
CASK UNLOADING PORT PLUG (ND)
211-H-012
BRIDGE CRANE WE/M MANIP 20 TON CAPACITY (ND)
211-H-031
FACILITY GRAPPLE 20 TON CAPACITY (ND)
211-S-088
CONTAINER WELDING STATION (ND)
211-S-031
CONTAINER TRANSFER/ STORAGE CAR (ND)
211-H-010 (TRUCK)
211-H-017 (RAIL)
SHIPPING CASK LIFTING STRONGBACK 40 TON TRUCK (ND), 125 TON RAIL (ND)
211-H-028
ROTATING LOAD BLOCK 125 TON CAPACITY (CA)
211-N-039
CASK SHADOW SHIELD PANEL (ND)
211-N-007
VENT. BARRIER ROLL-UP DOOR W/DRIVE (ND)
211-N-024
CRANE MAINT. SHIELD DOOR (ND)
211-H-030
ROTATING LOAD BLOCK 20 TON CAPACITY (ND)
211-H-002
FUEL HANDLING GRAPPLE 2000 lb CAPACITY (ND)
211-T-001
DECON TANK ASSEMBLY (ND)
211-S-028
WELD INSPECTION STATION (ND)
211-N-035
ROLL-UP DOOR
CRANE MAINTENANCE ROOM
SHIPP'G CASK
TRANSPORTER
CASK OUTER LID
CASK INNER LID
FUEL ASSY
NORMAL
OFF- NORMAL
INSP. STA.
CONTAINER FILL/WELD STA.
WELD INSP. STA.
DECON STA.
FOR CONTINUATION SEE BELOW
AIR LOCK
CASK RECEIVING AND SHIPPING
CASK PREPARATION
CASK TRANSFER TUNNEL
UNLOADING HOT CELL
CONTAINER TRANSFER TUNNEL
211-N-042
VENTILATION BARRIER DOOR (ND)
211-N-021
VENTILATION BARRIER DOOR (CA)
211-N-014
SHIELD VALVE W/DRIVE (ND)
211-H-013
CONTAINER TRANSFER MACHINE (ND)
211-S-086
SURFACE STORAGE RACKS 72 POS. (ND)
WASTE TRANSPORTER WITH CASK, CONTAINER HOIST & GRAPPLE
TO REPOSITORY PORTAL
PLUG
AIR LOCK
CONTAINER TRANSFER TUNNEL
OUT TRANSFER STATION
SURFACE STORAGE VAULT
NOTES
1. FUEL ASSEMBLY OPERATIONS SHOWN FOR STAGE 1. HLW OPERATIONS PERFORMED IN STAGE 2.
2. ND = NEEDS DEVELOPMENT CA = COMMERCIALLY AVAILABLE
3. 211-X-XXX DENOTES EQUIPMENT NUMBER.
REFERENCE DRAWINGS
UNCONTROLLED DISTRIBUTION
DESIGN VERIFIED
REV DATE ISSUE DESCRIPTION BY CK'D SUPV PE
0 ISSUED FOR SCP/CDR EN ZS ZS LFE
A ISSUED FOR SCP/CDR EN ZS ZS LFE
PROPERTY OF
SANDIA NATIONAL LABORATORIES
DEVELOPED BY
BECHTEL, SAN FRANCISCO
SNL CONTRACT NO. 52-9817: CHANGES REQUIRE PRIOR APPROVAL OF THE PROCURING AGENCY
TITLE
WASTE HANDLING OPERATIONS
MECHANICAL FLOW DIAGRAM
WASTE HANDLING BUILDING 1
DWG. APPROVED
DWG. APPROVED
SIZE D
BECHTEL JOB NO. 16039
DWG. CLASS UNC
SNL FSCM 14213
PAGE NO.
BECHTEL DWG. NO. SK-211-M-501
REV. 0
SNL DWG. NO.
CAT.
TO.535K211M501.DGN

Figure 3-5.

212-N-035 ROLL-UP DOOR (CA)

212-H-027 BRIDGE CRANE 125 TON CAPACITY (CA)

212-H-028 ROTATING LOAD BLOCK 125 TON CAPACITY (CA)

212-H-010 (TRUCK)
212-H-017 (RAIL) SHIPPING CASK LIFTING STRONGBACK 40 TON (TRUCK) (ND) / 125 TON (RAIL) (ND)

212-N-033 VENTILATION BARRIER DOOR (CA)

212-S-015 SHIPPING CASK TRANSFER CAR 125 TON CAPACITY (ND)

212-N-007 VENT. BARRIER ROLL-UP DOOR W/DRIVE (ND)

212-H-009 JIB CRANE 10 TON CAPACITY (CA)

212-N-039 CASK SHADOW SHIELD PANEL (ND)

212-N-010 CASK UNLOADING PORT PLUG (ND)

212-H-012 BRIDGE CRANE W E/M MANIP 20 TON CAPACITY (ND)

212-H-030 ROTATING LOAD BLOCK 20 TON CAPACITY (ND)

212-H-031 FACILITY GRAPPLE 20 TON CAPACITY (ND)

212-H-002 FUEL HANDLING GRAPPLE 2000 lb CAPACITY (ND)

212-T-001 DECON TANK ASSEMBLY (ND)

212-S-031 CONTAINER TRANSFER/ STORAGE CAR (ND)

212-S-088 CONTAINER WELDING STATION (ND)

212-S-028 WELD INSPECTION STATION (ND)

212-S-016 TRANSFER/STORAGE CART (ND)

212-S-035 FUEL ASS'Y BASKETS (ND)

212-N-024 CRANE MAINT. SHIELD DOOR (ND)

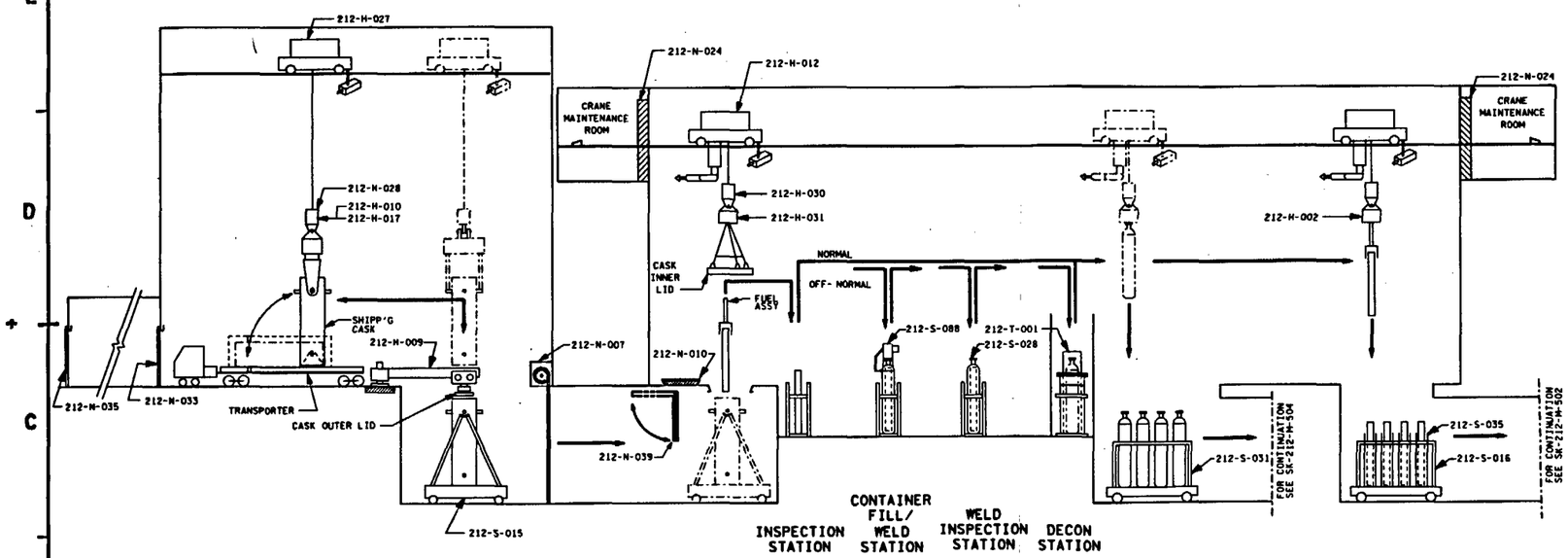

NOTES

1. ND = NEEDS DEVELOPMENT
   CA = COMMERCIALLY AVAILABLE
2. 212-X-XXX DENOTES EQUIPMENT NUMBER.

REFERENCE DRAWINGS

SK-212-M-502 WASTE HANDLING OPERATIONS MECHANICAL FLOW DIAGRAM WASTE HANDLING BUILDING 2 SH. 2 OF 4

SK-212-M-503 WASTE HANDLING OPERATIONS MECHANICAL FLOW DIAGRAM WASTE HANDLING BUILDING 2 SH. 3 OF 4

SK-212-M-504 WASTE HANDLING OPERATIONS MECHANICAL FLOW DIAGRAM WASTE HANDLING BUILDING 2 SH. 4 OF 4

UNCONTROLLED DISTRIBUTION
DESIGN VERIFIED

REV	DATE	ISSUE DESCRIPTION	BY	CK'D	SUPV	PE
C	11/6/86	ISSUED FOR SCP/CDR	EH	ES	ES	LFE
B	12/10/85	ISSUED FOR SCP/CDR	JC	ZS	ZS	LFE
A	5/27/85	ISSUED FOR RCD/SC	JC	SG	ZS	LFE

PROPERTY OF
SANDIA NATIONAL LABORATORIES
DEVELOPED BY
BECHTEL, SAN FRANCISCO
SNL CONTRACT NO. 52-9817: CHANGES REQUIRE PRIOR APPROVAL OF THE PROCURING AGENCY

TITLE
WASTE HANDLING OPERATIONS MECHANICAL FLOW DIAGRAM WASTE HANDLING BUILDING 2 SH. 1 OF 4

DWG. APPROVED SNL DATE 11/6/86 | DWG. APPROVED BMT DATE 11/6/86 | SIZE D
BECHTEL JOB NO. 16039 | DWG. CLASS UNC | SNL FSCM 14213 | PAGE NO.
BECHTEL DWG. NO. SK-212-M-501 | REV. 0 | SNL DWG. NO. | CAT.

170.535K212M501.DGN

Figure 3-6.

212-N-004
SHIELD DOOR (ND)

212-H-033
10 TON BRIDGE CRANE (ND)

212-H-034
ROTATING LOAD BLOCK
10 TON CAPACITY (ND)

212-H-035
FACILITY GRAPPLE
10 TON CAPACITY (ND)

212-N-001
SHIELD VALVE W/DRIVE (ND)

212-R-004
BRIDGE MOUNTED
E/M MANIPULATOR (ND)

212-S-071
MULTI-COLLET GRIPPER
C/W SUPPORT CARRIAGE ASSY (ND)

212-S-083
FUEL ASSEMBLY
FRAME COMPACTOR (ND)

212-S-074
FUEL ROD COLLECTOR
ASSEMBLY (ND)

212-S-097
CONSOLIDATION SYSTEM
FRAME ASSEMBLY (ND)

212-S-075
CONTAINER SECTOR
COLLECT DEVICE (ND)

212-S-076
TELESCOPING CYLINDER (ND)

212-N-005
INTERCELL SEAL VALVE
WITH DRIVE (ND)

212-S-085
TRAVERSING CARRIAGE (ND)

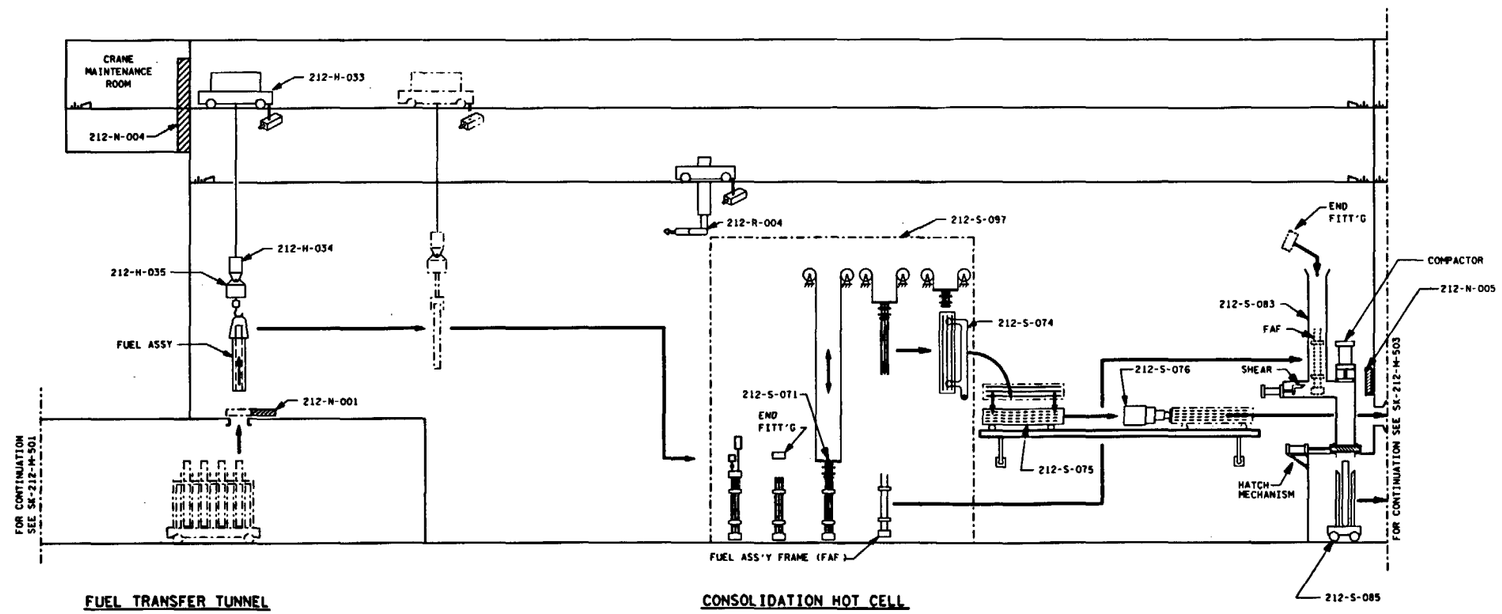

NOTES

1. ND = NEEDS DEVELOPMENT
2. 212-X-XXX DENOTES EQUIPMENT NUMBER.

REFERENCE DRAWINGS

SK-212-M-501 WASTE HANDLING OPERATIONS MECHANICAL FLOW DIAGRAM WASTE HANDLING BUILDING 2 SH. 1 OF 4

SK-212-M-503 WASTE HANDLING OPERATIONS MECHANICAL FLOW DIAGRAM WASTE HANDLING BUILDING 2 SH. 3 OF 4

SK-212-M-504 WASTE HANDLING OPERATIONS MECHANICAL FLOW DIAGRAM WASTE HANDLING BUILDING 2 SH. 4 OF 4

UNCONTROLLED DISTRIBUTION
DESIGN VERIFIED

REV	DATE	ISSUE DESCRIPTION	BY	CK'D	SUPV	PE
D	11/13/87	ISSUED FOR SCP/CDR	EM	ZS	ZS	LFE
B	12/10/86	ISSUED FOR SCP/CDR	JC	ZS	ZS	LFE
A	5/27/86	ISSUED FOR RCD/SC	JC	SG	ZS	LFE

PROPERTY OF
SANDIA NATIONAL LABORATORIES
DEVELOPED BY
BECHTEL, SAN FRANCISCO
SNL CONTRACT NO. 52-9817: CHANGES REQUIRE PRIOR APPROVAL OF THE PROCURING AGENCY

TITLE
WASTE HANDLING OPERATIONS
MECHANICAL FLOW DIAGRAM
WASTE HANDLING BUILDING 2
SH. 2 OF 4

DWG. APPROVED SNL DATE 11/13/87 | DWG. APPROVED BNT DATE 11/13/87 | SIZE D

BECHTEL JOB NO. 16039 | DWG. CLASS UNC | SNL FSCM 14213 | PAGE NO.

BECHTEL DWG. NO. SK-212-M-502 | REV. 0 | SNL DWG. NO. | CAT.

[TO.51SK212MG02.DGN]

Figure 3-7.

212-S-079
CONSOLIDATED MOUNT
& ROTATING CONTAINER DEVICE (ND)

212-H-037
BRIDGE CRANE W/
E/M MANIPULATOR
10 TON CAPACITY (ND)

212-H-038
ROTATING LOAD BLOCK
10 TON CAPACITY (ND)

212-H-039
FACILITY GRAPPLE
10 TON CAPACITY (ND)

212-H-040
FUEL CONTAINER
HANDLING TOOL (ND)

212-S-080
FUEL CONTAINER
WELDER STATION (ND)

212-S-081
WELD INSPECTION
STATION (ND)

212-N-040
AIR LOCK SHIELD VALVE
W/DRIVE (ND)

212-N-041
SHIELD VALVE
W/DRIVE (ND)

212-T-002
DECON TANK
SYSTEM (ND)

212-S-084
CONTAINER TRANSFER CAR (ND)

212-N-013
SHIELD DOOR (ND)

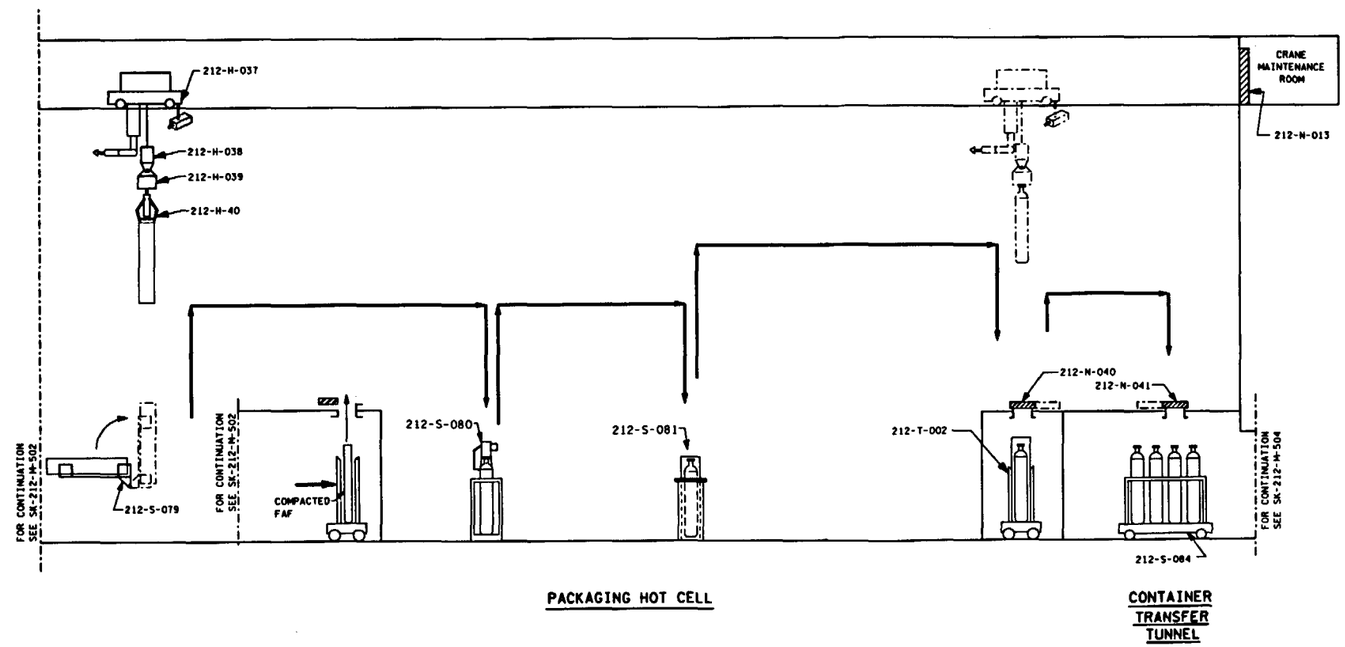

NOTES

1. ND = NEEDS DEVELOPMENT
2. ONLY NORMAL OPERATIONS SHOWN.
3. 212-X-XXX DENOTES EQUIPMENT NUMBER.

REFERENCE DRAWINGS

SK-212-M-501 WASTE HANDLING OPERATIONS MECHANICAL FLOW DIAGRAM WASTE HANDLING BUILDING 2 SH. 1 OF 4

SK-212-M-502 WASTE HANDLING OPERATIONS MECHANICAL FLOW DIAGRAM WASTE HANDLING BUILDING 2 SH. 2 OF 4

SK-212-M-504 WASTE HANDLING OPERATIONS MECHANICAL FLOW DIAGRAM WASTE HANDLING BUILDING 2 SH. 4 OF 4

UNCONTROLLED DISTRIBUTION
DESIGN VERIFIED

REV	DATE	ISSUE DESCRIPTION	BY	CK'D	SUPV	PE
C	11/19/87	ISSUED FOR SCP/CDR	EH	ZS	ZS	LFE
B	12/18/86	ISSUED FOR SCP/CDR	JC	ZS	ZS	LFE
A	5/21/86	ISSUED FOR RCD/SC	JC	SG	ZS	LFE

PROPERTY OF
SANDIA NATIONAL LABORATORIES
DEVELOPED BY
BECHTEL, SAN FRANCISCO
SNL CONTRACT NO. 52-9817: CHANGES REQUIRE PRIOR APPROVAL OF THE PROCURING AGENCY

TITLE
WASTE HANDLING OPERATIONS
MECHANICAL FLOW DIAGRAM
WASTE HANDLING BUILDING 2
SH. 3 OF 4

DWG. APPROVED	DATE	DWG. APPROVED	DATE	SIZE
SNL		BNI		D

BECHTEL JOB NO.	DWG. CLASS	SNL FSCM	PAGE NO.
18039	UNC	14213	

BECHTEL DWG. NO.	REV.	SNL DWG. NO.	CAT.
SK-212-M-503	0		

170.51SK212M503.DGN

Figure 3-8.

212-N-014	212-H-013	212-S-086	212-N-022	212-N-049	212-N-021
SHIELD VALVE W/DRIVE (ND)	CONTAINER TRANSFER MACHINE (ND)	SURFACE STORAGE RACKS 112 POS. (ND)	VENTILATION BARRIER DOOR (ND)	SHIELD VALVE W/DRIVE (ND)	VENTILATION BARRIER DOOR (CA)

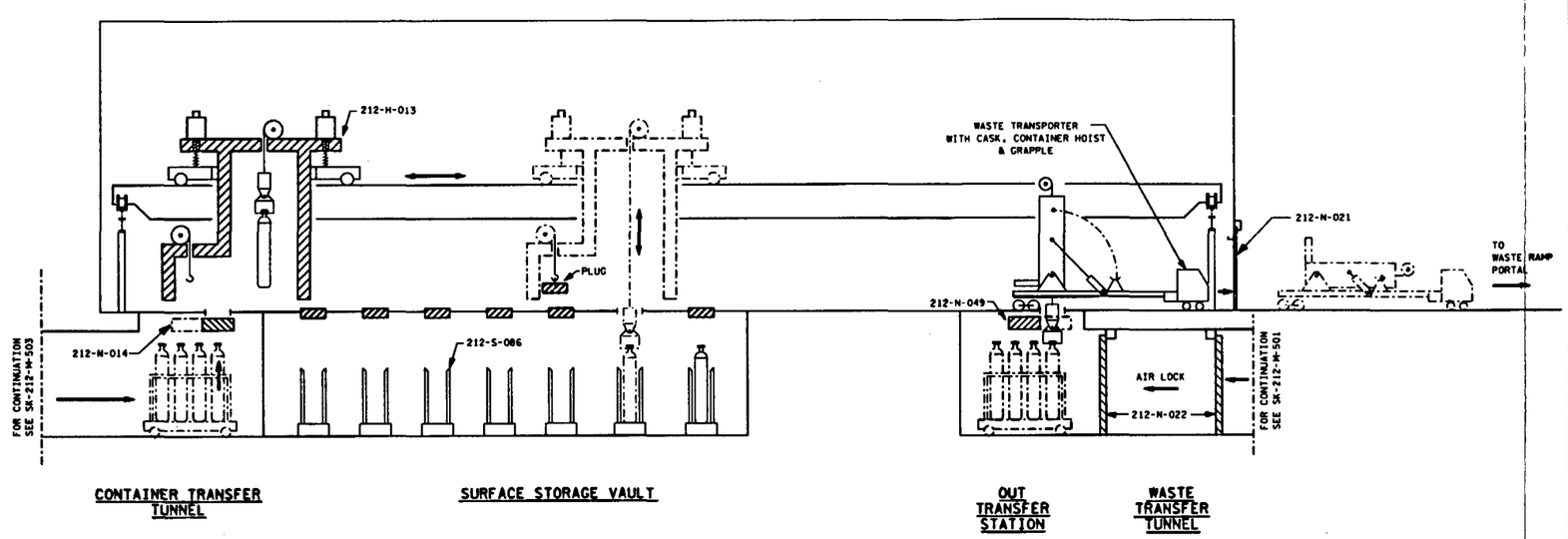

NOTES

1. ND = NEEDS DEVELOPMENT
   CA = COMMERCIALLY AVAILABLE
2. 212-X-XXX DENOTES EQUIPMENT NUMBER.

REFERENCE DRAWINGS

SK-212-M-501	WASTE HANDLING OPERATIONS MECHANICAL FLOW DIAGRAM WASTE HANDLING BUILDING 2 SH. 1 OF 4
SK-212-M-502	WASTE HANDLING OPERATIONS MECHANICAL FLOW DIAGRAM WASTE HANDLING BUILDING 2 SH. 2 OF 4
SK-212-M-503	WASTE HANDLING OPERATIONS MECHANICAL FLOW DIAGRAM WASTE HANDLING BUILDING 2 SH. 3 OF 4

UNCONTROLLED DISTRIBUTION
DESIGN VERIFIED

REV	DATE	ISSUE DESCRIPTION	BY	CK'D	SUPV	PE
0	11/19/87	ISSUED FOR SCP/CDR	EH	ZS	ZS	LFE
B	12/10/86	ISSUED FOR SCP/CDR	JC	ZS	ZS	LFE
A	5/27/86	ISSUED FOR RCD/SC	JC	SG	ZS	LFE

PROPERTY OF
SANDIA NATIONAL LABORATORIES
DEVELOPED BY
BECHTEL, SAN FRANCISCO
SNL CONTRACT NO. 52-98178 CHANGES REQUIRE PRIOR APPROVAL OF THE PROCURING AGENCY

TITLE
WASTE HANDLING OPERATIONS
MECHANICAL FLOW DIAGRAM
WASTE HANDLING BUILDING 2
SH. 4 OF 4

DWG. APPROVED	DATE	DWG. APPROVED	DATE	SIZE
SNL		BNE		D

BECHTEL JOB NO.	DWG. CLASS	SNL FSCN	PAGE NO.
16039	UNC	14213	

BECHTEL DWG. NO.	REV.	SNL DWG. NO.	CAT.
SK-212-M-504	0		

170.S15K212M504.DGN

Figure 3-9.

3.1.1.2 Preparation

During Stage 1 and the first 2 yr of Stage 2, WHB-1 will be used to prepare spent fuel for disposal (Figure 3-2). For the remainder of Stage 2 operations, WHB-1 will be used for preparing only DHLW and WVHLW (Figure 3-3). Throughout Stage 2, WHB-2 will prepare and consolidate spent fuel assemblies (Figure 3-4). Townes et al. (1987a) describe the consolidation system. After preparation, the waste will be placed in a surface storage vault to await emplacement. Site-generated radioactive waste will be treated in the waste treatment building and prepared for shipment to an offsite disposal area. Offsite disposal of site-generated waste is a design criterion (Stein, 1986).

3.1.1.2.1 Stage 1

During Stage 1, WHB-1 will prepare 400 MTU/yr of intact fuel assemblies, including some spent fuel consolidated at commercial reactors (Figure 3-2). Consolidated fuel will be handled in the same manner as unconsolidated assemblies. The spent fuel assemblies or consolidated fuel canisters are unloaded from the casks in the cask-unloading hot cell, where they are placed in interim storage racks or directly in disposal containers. The containers are sealed, inspected, and decontaminated, if necessary, before transfer to the surface storage vault to await transportation to the emplacement area.

3.1.1.2.2 Stage 2

In Stage 2, the total rate of waste receipt and throughput increases to a maximum of 3,400 MTU/yr. During the first 2 yr of Stage 2 operations, WHB-1 continues to prepare 400 MTU/yr of spent fuel. Thereafter, WHB-1 will prepare only DHLW and WVHLW for disposal (Figure 3-3). In WHB-1, during Stage 2, canisters of high-level waste are unloaded from the shipping casks in the cask-unloading hot cell, inspected, and placed either in interim storage racks or overpacked with a disposal container. Then the containers are sealed and are either transferred to the surface storage vault or directly to the emplacement area.

WHB-2 is dedicated to the preparation of spent fuel (Figures 3-4 and 3-6 through 3-8). In WHB-2, the spent fuel assemblies are consolidated before being loaded into disposal containers. The spent fuel assemblies are transferred from the cask-unloading hot cell to the consolidation hot cell, where they are positioned and the end fittings are removed. The exposed fuel rods are separated from the structural hardware, consolidated in a loading trough, and placed in disposal containers. The assembly hardware is compacted and packaged for disposal (Townes et al., 1987b). The containers are transferred to the surface storage vault to await transportation underground. Off-normal fuel assemblies are packaged directly in containers in the cask-unloading hot cell, bypassing the consolidation process. For purposes of the conceptual design, off-normal assemblies include (1) assemblies that are not suitable for consolidation because the fuel rods have been damaged; (2) small quantities of assemblies from unusual fuel types for which consolidation is not practical; and (3) fuel that has been consolidated at reactors.

3.1.1.2.3 Site-Generated Waste

The treatment of liquid and solid radioactive waste generated on the site is described in the flow diagrams shown in Figures 3-10 and 3-11, respectively. Liquid wastes that may be contaminated are generated in the waste-handling buildings, the decontamination building, the washdown facility, and underground. These liquid wastes are transferred to receiving tanks in the waste treatment building. These tanks will be designed and periodically inspected to prevent the possibility of criticality. All liquid wastes are sampled. If radioactive, the pH of the solutions is chemically adjusted, if necessary, and the liquids are solidified in 55-gal drums. The drums of solidified waste are monitored, inspected, and transferred to a storage area in the waste treatment building pending transportation to an offsite disposal area.

Solid radioactive wastes are generated in the waste-handling buildings, in the decontamination building, and by waste emplacement activities. Spent cartridge filters from the waste treatment system for recycled liquid waste are packaged in drums with an adsorbent. Air filters from the hot cells are removed and separated from their frames. The frames are shredded, and the filters are compacted. Both are placed in drums, and the drums are transferred to an interim storage area. Compactible and noncompactible wastes are collected at the point of generation and brought by truck to the waste treatment building. Compactible wastes are segregated for compaction, and both waste types are placed in boxes, inspected, and transferred to an interim storage area in the waste treatment building. The drums and boxes are then loaded on trucks for disposal offsite.

3.1.1.3 Waste-Handling Equipment

Major waste-handling equipment identified in the flow diagrams is listed in Table 3-3 for WHB-1, Table 3-4 for WHB-2, and Table 3-5 for the waste treatment building. Equipment needing development is indicated.

3.1.2 Underground Waste-Handling and Disposal Operations

Waste emplacement operations begin when the waste containers are removed from WHB-1 and WHB-2. The annual waste emplacement schedule for waste containers is presented in Table 3-6. Individual waste containers are carried by shielded transporters from the waste-handling buildings to the emplacement boreholes. The vertical and horizontal emplacement borehole orientations considered in this report are illustrated in Figures 3-12 and 3-13, respectively. The borehole excavation and lining process is described in Section 3.3, and the subsequent operations involved in borehole preparation, waste emplacement, and borehole closure are described in this section.

3.1.2.1 Vertical Emplacement

Vertical waste emplacement operations consist of four processes: borehole preparation, waste transport, waste emplacement, and borehole closure. The sequence is similar for spent fuel, DHLW, and WVHLW. In each case, a single waste container is placed in each borehole.

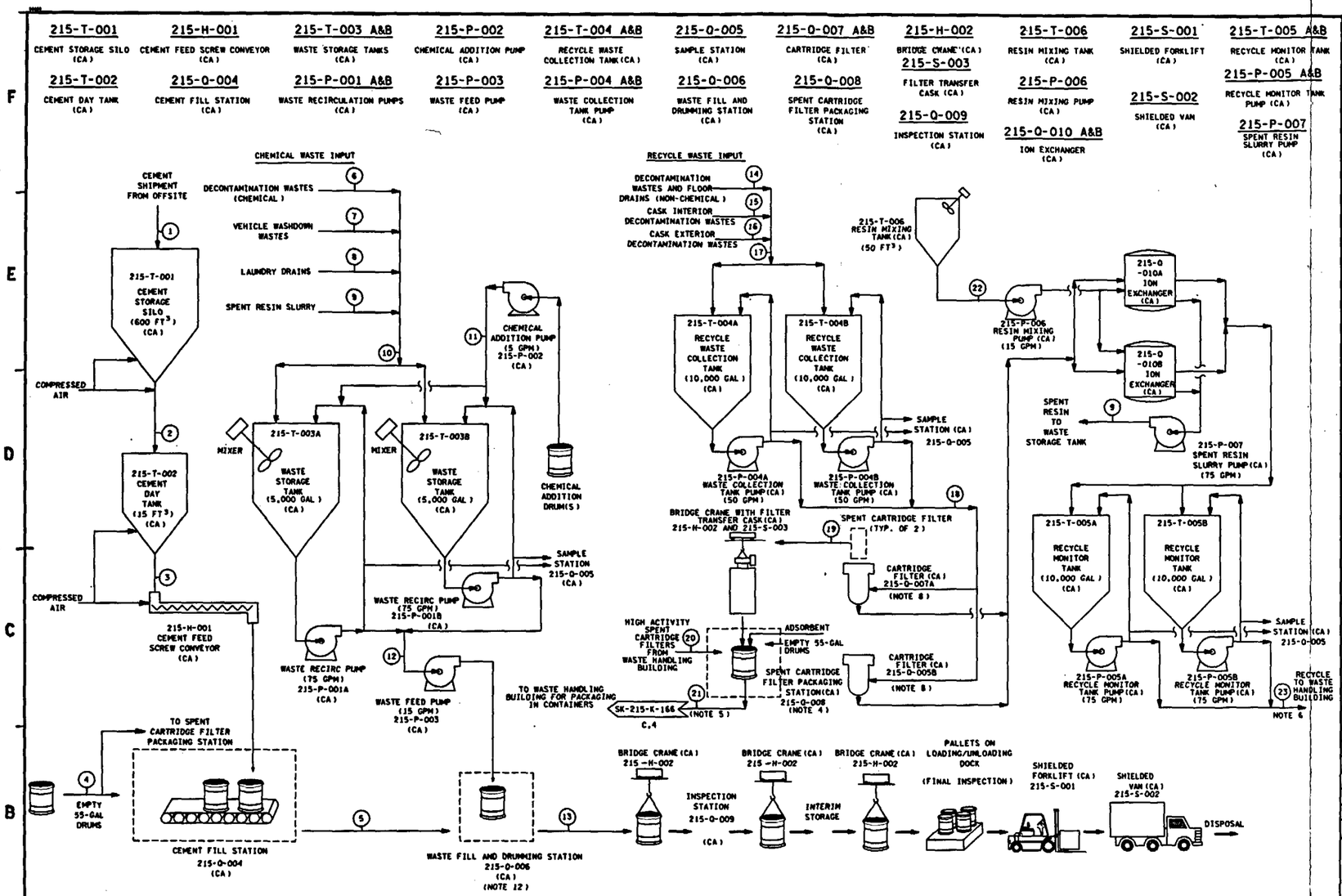

STREAM	1	2	5	4	5	6	7	8	9	10	11	12	13
DESCRIPTION	CEMENT SHIPMENTS	CEMENT DAY TANK FILL	DRUM CEMENT FILL (NOTE 2)	EMPTY DRUMS	DRUMS LOADED WITH CEMENT	DECON. WASTE	VEHICLE WASHDOWN	LAUNDRY DRAINS	SPENT RESIN SLURRY	TOTAL LIQUID RADWASTE	CHEMICAL ADDITION	DRUM WASTE FILL (NOTE 2)	SOLIDIFIED WASTE DRUMS
THROUGHPUT RATE	4,000 FT³/YR	4,000 FT³/YR	4,000 FT³/YR	1,670 DRUMS/YR	1,200 DRUMS/YR	22,400 GAL/YR	5,800 GAL/YR	5,700 GAL/YR	2,600 GAL/YR	36,500 GAL/YR	VARIES	15 GPM	1,200 DRUMS/YR
BATCH SIZE	600 FT³	15 FT³	400 FT³	VARIES	120 DRUMS	—	—	—	2,600 GAL	—	VARIES	3,650 GAL	120 DRUMS
BATCHES/YR	7	265	10	VARIES	10	—	—	—	1.0	—	10	10	10
Ci/YR	0	0	0	0	0	4.5	0.06	0.002	80	85	0	85	85

STREAM	14	15	16	17	18	19	20	21	22	23
DESCRIPTION	DECON. AND F/D WASTE	CASK INTERIOR DECON. WASTE	CASK EXTERIOR DECON. WASTE	CASK DECON. WASTE	CASK DECON. WASTE PROCESS	SPENT CARTR. FILTERS (NOTE 4)	WHB SPENT CARTRIDGE FILTER (NOTE 4)	FILTER DRUMS TO PACKAGING	FRESH RESIN	RECYCLE WATER
THROUGHPUT RATE	18,000 GAL/YR	212,400 GAL/YR	149,600 GAL/YR	380,000 GAL/YR	50 GPM	43/YR	425/YR	470 DRUMS/YR	2,600 GAL/YR	380,000 GAL/YR
BATCH SIZE	—	—	—	—	9,600 GAL	1 CARTR.	1 CARTR.	—	2,600 GAL	9,500 GAL
BATCHES/YR	—	—	—	—	40	43	425	470	1.0	40
Ci/YR	4	750	15.0	770	770	690	6,800	7,500	0	0

THE DATA SHOWN ON THIS FLOW DIAGRAM ARE FOR DESIGN PURPOSES ONLY AND DO NOT REPRESENT ACTUAL OPERATING CONDITIONS.

NOTES

1. FLOW DIAGRAM IS BASED ON CEMENT SOLIDIFICATION SYSTEM MANUFACTURED BY A SPECIFIC VENDOR. SYSTEM DESIGN WILL VARY FOR DIFFERENT VENDORS.
2. DATA BASED ON 30 GAL OF LIQUID WASTE AND 25 GAL (3.3 FT³) OF CEMENT PER DRUM.
3. EMPTY DRUM WEIGHS 50 LB. DRUM OF SOLIDIFIED WASTE WEIGHS 650 LB. DRY CEMENT DENSITY IS 90 LB/FT³.
4. ONE SPENT CARTRIDGE FILTER CONTAINING 16 CI IS PACKAGED IN ONE 55-GAL DRUM.
5. PACKAGED HIGH-ACTIVITY CARTRIDGE FILTERS RETURNED TO WASTE HANDLING BUILDING VIA SHIELDED CASK LOADED ON A FLATBED TRAILER FOR PACKAGING IN CONTAINERS.
6. IF NECESSARY, INTERMITTENT FLOW OF OFF-NORMAL LIQUID WILL BE RETURNED TO RECYCLE WASTE COLLECTION TANK FOR REPROCESSING.
7. DATA BASED ON RADIOACTIVITY CONCENTRATIONS AS INDICATED BELOW:

DECON. WASTES AND FLOOR DRAINS (CHEMICAL AND NON-CHEMICAL)	200μCI/GAL
VEHICLE WASHDOWN WASTES	10μCI/GAL
LAUNDRY DRAINS	0.4μCI/GAL
CASK INTERIOR DECONTAMINATION WASTES (SPENT FUEL CASKS)	2000μCI/GAL
(CANISTER CASKS)	200μCI/GAL
CASK EXTERIOR DECONTAMINATION WASTES	100μCI/GAL

8. DATA BASED ON REMOVAL OF 90% OF RADIOACTIVITY BY CARTRIDGE FILTERS.
9. DATA FOR THIS DRAWING ARE BASED ON AN ANNUAL SPENT FUEL DELIVERY OF 3000 MTU OF WHICH 70% IS DELIVERED BY TRUCK AND 30% BY RAILCAR.
10. CA - COMMERCIALLY AVAILABLE
    ND - NEEDS DEVELOPMENT
11. 215-X-XXX DENOTES EQUIPMENT NUMBERS
12. WASTE FILL AND DRUMMING STATION INCLUDES BOTH FILLING AND MIXING OPERATIONS.

REFERENCE DRAWINGS

SK-215-K-166	WASTE TREATMENT BUILDING SOLID RADIOACTIVE WASTE FLOW DIAGRAM
SK-215-K-167 AND 168	WASTE TREATMENT BUILDING GENERAL ARRANGEMENT DRAWINGS

UNCONTROLLED DISTRIBUTION DESIGN VERIFIED

REV	DATE	ISSUE DESCRIPTION	BY	CK'D	SUPV	PE
1	1/14/87	REVISED AND REISSUED FOR SCP/CDR				
0	1-29-87	ISSUED FOR SCP/CDR	S	I	G	N E D
C	12-8-86	ISSUED TO ADD NOTE 10 INFO.	S	I	G	N E D
B	4-4-86	ISSUED FOR RCD/SC	S	I	G	N E D
A	11-4-85	ISSUED FOR PROGRESS REVIEW	S	I	G	N E D

PROPERTY OF
SANDIA NATIONAL LABORATORIES
DEVELOPED BY
BECHTEL, SAN FRANCISCO
SNL CONTRACT NO. 52-9817: CHANGES REQUIRE PRIOR APPROVAL OF THE PROCURING AGENCY

TITLE
WASTE TREATMENT BUILDING LIQUID RADIOACTIVE WASTE FLOW DIAGRAM

DWG. APPROVED SNL G. Lochbaum	DATE 2/10/87	DWG. APPROVED SNL J.F. Cousins P.E.	DATE 2/12/87
BECHTEL JOB NO. 16039		DWG. CLASS UNC	SNL FSCM 14213
BECHTEL DWG. NO. SK-215-K-165	REV. 1	SNL DWG. NO.	CAT.

SIZE
PAGE NO.

[70.513K215W165.DGN]

Figure 3-10.

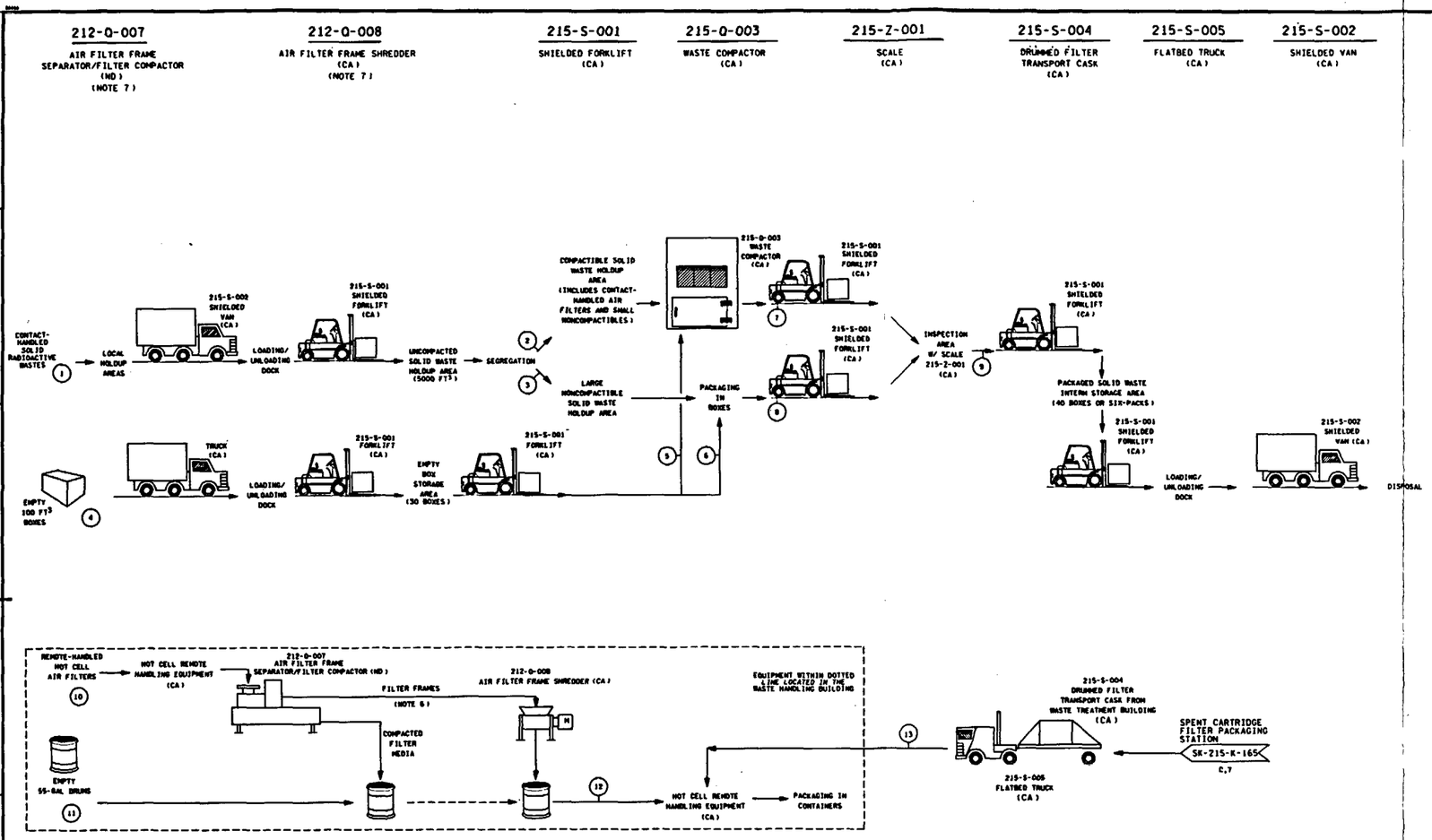

STREAM / THROUGHPUT RATE	1 CONTACT-HANDLED SOLID WASTES	2 COMPACTIBLE WASTE	3 NON-COMPACTIBLE WASTE	4 EMPTY BOXES	5 BOXES FOR COMPACTIBLE WASTE	6 BOXES FOR NON-COMPACTIBLE WASTE	7 PACKAGED COMPACTED WASTE (NOTES 1&2)	8 PACKAGED NON-COMPACTIBLE WASTE	9 CONTACT-HANDLED WASTE TREATED FOR DISPOSAL	10 REMOTE HANDLED AIR FILTERS	11 EMPTY 55-GAL DRUMS	12 DRUMS TO PACKAGING	13 HIGH ACTIVITY CARTRIDGE FILTERS (NOTE 9)
FT^3/YR	49,200	46,550	2,650	—	—	—	9,310	2,650	11,960	2,640	—	1,060	3,400
LB/YR (NOTE 2)	358,800	279,300	79,500	62,500 (WEIGHT OF CONTAINERS)	48,500 (WEIGHT OF CONTAINERS)	14,000 (WEIGHT OF CONTAINERS)	327,800 (INCLUDES WEIGHT OF CONTAINERS)	93,500 (INCLUDES WEIGHT OF CONTAINERS)	421,300 (INCLUDES WEIGHT OF CONTAINERS)	31,700	7,100 (WEIGHT OF CONTAINERS)	38,800 (INCLUDES WEIGHT OF CONTAINERS)	587,500 (NOTE 9)
PACKAGES / YR (NOTE 3)	—	—	—	125 BOXES	97 BOXES	28 BOXES	97 BOXES	28 BOXES	125 BOXES	—	145 DRUMS	145 DRUMS	470 DRUMS
CI/YR (NOTES 4,5&8)	135	130	5	—	—	—	130	5	135	900	—	900	7,500

THE DATA SHOWN ON THIS FLOW DIAGRAM ARE FOR DESIGN PURPOSES ONLY AND DO NOT REPRESENT ACTUAL OPERATING CONDITIONS.

NOTES

1. DATA BASED ON COMPACTION RATIO OF 5:1.
2. DATA BASED ON AVERAGE DENSITY OF COMPACTIBLE WASTE OF 6 LB/FT^3 BEFORE COMPACTION, AND AVERAGE DENSITY OF NONCOMPACTIBLE WASTE OF 30 LB/FT^3. WEIGHT OF EMPTY BOX IS 500 LB. WEIGHT OF FULL BOX IS 3580 LB, TYPICALLY. EMPTY DRUM WEIGHT IS 50 LB.
3. INTERIOR VOLUME OF BOX IS 96 FT^3; INTERIOR VOLUME OF DRUM IS 7.5 FT^3.
4. DATA BASED ON AVERAGE CONCENTRATION OF RADIOACTIVITY IN COMPACTIBLE WASTE OF 0.002B CI/FT^3 BEFORE COMPACTION.
5. DATA BASED ON AVERAGE CONCENTRATION OF RADIOACTIVITY IN NONCOMPACTIBLE WASTE OF 0.001B CI/FT^3.
6. DATA BASED ON AIR FILTERS WITH FRAMES HAVING 75 VOLUME PERCENT FILTER MEDIA AND 25 VOLUME PERCENT FRAMES.
7. AIR FILTER CUTTER/COMPACTOR AND FRAME SHREDDER ARE LOCATED IN THE WASTE HANDLING BUILDING.
8. DATA BASED ON AVERAGE CONCENTRATION OF RADIOACTIVITY IN REMOTE-HANDLED AIR FILTERS OF 0.33 CI/FT^3.
9. DRUMMED HIGH-ACTIVITY FILTERS, ONE PER 55-GAL DRUM, ARE RETURNED TO WHB VIA FILTER SHIELDED CASK AND FLATBED TRAILER. DRUMMED FILTER, ASSUMED TO WEIGH 1250 LB AND CONTAIN 16 CI OF SHIPPING CASK DECONTAMINATION "CRUD".
10. CA - COMMERCIALLY AVAILABLE
    ND - NEEDS DEVELOPMENT
11. 215-X-XXX DENOTES EQUIPMENT NUMBERS

REFERENCE DRAWINGS

SK-215-K-165 WASTE TREATMENT BUILDING LIQUID RADIOACTIVE WASTE FLOW DIAGRAM

SK-215-K-167 AND 168 WASTE TREATMENT BUILDING GENERAL ARRANGEMENT DRAWINGS

UNCONTROLLED DISTRIBUTION
DESIGN VERIFIED

REV	DATE	ISSUE DESCRIPTION	BY	CK'D	SUPV	PE
1	4/14/87	REVISED AND REISSUED FOR SCP/CDR				
0	1-29-87	ISSUED FOR SCP/CDR	S	I G	N E	D
C	12-8-86	ISSUED TO ADD NOTE 10 INFO.	S	I G	N E	D
B	4-4-86	ISSUED FOR RCD/SC	S	I G	N E	D
A	11-4-85	ISSUED FOR PROGRESS REVIEW	S	I G	N E	D

PROPERTY OF
SANDIA NATIONAL LABORATORIES
DEVELOPED BY
BECHTEL, SAN FRANCISCO
SNL CONTRACT NO. 52-9817: CHANGES REQUIRE PRIOR APPROVAL OF THE PROCURING AGENCY

TITLE
WASTE TREATMENT BUILDING
SOLID RADIOACTIVE WASTE
FLOW DIAGRAM

DWG. APPROVED DATE 4/14/87 | DWG. APPROVED DATE 4/14/87 | SIZE
BECHTEL JOB NO. 16039 | DWG. CLASS UNC | SNL FSCM 14213 | PAGE NO.
BECHTEL DWG. NO. SK-215-K-166 | REV. 1 | SNL DWG. NO. | CAT.

170,S3SK215K166.DGN

Figure 3-11.

TABLE 3-3

MAJOR WASTE-HANDLING EQUIPMENT IN WASTE-HANDLING BUILDING 1

Equipment Number	Description (capacity)	Location	Number of Units	Avail-ability*
211-N-035	Rollup door	Cask-receiving and shipping airlock	4	CA
211-N-033	Ventilation barrier door	Cask-receiving and shipping bay	4	CA
211-H-027	Bridge cranes (125-ton/25-ton capacity)	Cask-receiving and shipping bay	1	CA
211-H-028	Rotating load block (125-ton capacity)	Cask-receiving and shipping bay	1	CA
211-H-009	Jib crane (10-ton capacity)	Cask preparation area shipping bay and decontamination station	1	CA
211-S-015	Shipping cask transfer cart with drive (125-ton capacity)	Cask preparation area transfer tunnel	4	ND
211-N-007	Ventilation barrier door rollup with drive	Cask preparation area transfer tunnel	4	ND
211-H-010	Shipping-cask-lifting strongback truck (40-ton capacity)	Cask-receiving and shipping area	1	ND
211-H-017	Shipping-cask-lifting strongback rail (125-ton capacity)	Cask-receiving and shipping area	1	ND
211-N-039	Cask shadow shield panel	Cask preparation area transfer tunnel	4	ND
211-N-024	Crane maintenance shield door	Cask-unloading hot cell	1	ND
211-N-010	Cask-unloading-port plug	Cask-unloading hot cell	4	ND
211-H-012	Bridge crane with electromechanical manipulator (20-ton capacity)	Cask-unloading hot cell	1	ND

TABLE 3-3

MAJOR WASTE-HANDLING EQUIPMENT IN WASTE-HANDLING BUILDING 1
(concluded)

Equipment Number	Description (capacity)	Location	Number of Units	Avail-ability*
211-H-030	Rotating load block (20-ton capacity)	Cask-unloading hot cell	2	ND
211-T-001	Decontamination tank assembly	Cask-unloading hot cell	1	ND
211-H-031	Facility grapple (20-ton capacity)	Cask-unloading hot cell	8	ND
211-S-088	Container-welding station	Cask-unloading hot cell	1	ND
211-S-028	Weld inspection station	Cask-unloading hot cell	1	ND
211-H-002	Fuel-handling grapple (1-ton capacity)	Cask-unloading hot cell	8	ND
211-S-035	Fuel assembly baskets	Cask-unloading hot cell	48	ND
211-N-014	Shield valve with drive	Surface storage vault	4	ND
211-H-013	Container transfer machine	Surface storage vault	1	ND
211-S-086	Storage rack (72 positions)	Surface storage vault	1	ND
211-N-049	Shield valve with drive	Out-transfer bay	1	ND
211-N-04	Ventilation barrier door	Container transfer tunnel	2	ND
211-N-021	Ventilation barrier rollup door	Out-transfer bay	2	CA
211-S-031	Container transfer/ storage cart	Out-transfer bay	2	ND

*CA = commercially available; ND = needs development.

TABLE 3-4

MAJOR WASTE-HANDLING EQUIPMENT IN WASTE-HANDLING BUILDING 2

Equipment Number	Description (capacity)	Location	Number of Units	Availability*
212-N-033	Ventilation barrier door	Cask-receiving and shipping bay	8	CA
212-H-027	Bridge crane (125-ton/25-ton capacity)	Cask-receiving and shipping bay	1	CA
212-N-035	Rollup door	Cask-receiving and shipping airlock	8	CA
212-H-028	Rotating load block (125-ton capacity)	Cask-receiving and shipping bay	1	CA
212-H-009	Jib crane (10-ton capacity)	Cask preparation area decontamination station	2	CA
212-S-015	Shipping cask transfer cart with drive (125-ton capacity)	Cask preparation area transfer tunnel	8	ND
212-N-007	Ventilation barrier rollup door with drive	Cask preparation area transfer tunnel	8	ND
212-H-010	Shipping-cask-lifting strongback truck (40-ton capacity)	Cask-receiving and shipping bay	1	ND
212-H-017	Shipping-cask-lifting strongback rail (125-ton capacity)	Cask-receiving and shipping bay	1	ND
212-N-039	Cask shadow shield panel	Cask preparation area transfer tunnel	8	ND
212-N-024	Crane maintenance shield door	Crane maintenance room	2	ND
212-N-010	Cask-unloading port plug	Cask-unloading hot cell	8	ND
212-H-012	Bridge crane with electromechanical manipulator (20-ton capacity)	Cask-unloading hot cell	2	ND

TABLE 3-4

MAJOR WASTE-HANDLING EQUIPMENT IN WASTE-HANDLING BUILDING 2
(continued)

Equipment Number	Description (capacity)	Location	Number of Units	Avail-ability*
212-H-030	Rotating load block (20-ton capacity)	Cask-unloading hot cell	2	ND
212-H-031	Facility grapple (20-ton capacity)	Cask-unloading hot cell	16	ND
212-S-088	Container-welding station	Cask-unloading hot cell	2	ND
212-S-028	Weld inspection station	Cask-unloading hot cell	2	ND
212-T-001	Decontamination tank assembly	Cask-unloading hot cell	1	ND
212-S-031	Container transfer/ storage cart	Container transfer tunnel	4	ND
212-S-031	Container transfer/ storage cart	Waste transfer tunnel	2	ND
212-H-002	Fuel-handling grapple (1-ton capacity)	Cask-unloading hot cell	16	ND
212-S-016	Transfer/storage cart	Cask-unloading hot cell	8	ND
212-S-035	Fuel assembly bas-kets	Cask-unloading hot cell	60	ND
212-N-004	Crane maintenance shield door	Consolidation hot cell	4	ND
212-H-033	Bridge crane (10-ton capacity)	Consolidation hot cell	4	ND
212-H-034	Rotating load block (10-ton capacity)	Consolidation hot cell	4	ND
212-H-035	Facility grapple (10-ton capacity)	Consolidation hot cell	8	ND
212-N-001	Shield valve with drive	Consolidation hot cell	8	ND

TABLE 3-4

MAJOR WASTE-HANDLING EQUIPMENT IN WASTE-HANDLING BUILDING 2
(continued)

Equipment Number	Description (capacity)	Location	Number of Units	Avail-ability*
212-R-004	Bridge-mounted electromechanical manipulator (10-ton capacity)	Consolidation hot cell	4	ND
212-S-071	Multicollet gripper; comes with support carriage assembly	Consolidation hot cell	4	ND
212-S-074	Fuel rod collector assembly	Consolidation hot cell	4	ND
212-S-097	Consolidation frame assembly	Consolidation hot cell	4	ND
212-S-075	Container sector-collecting device	Consolidation hot cell	4	ND
212-S-076	Telescoping cylinder	Consolidation hot cell	4	ND
212-S-083	Fuel assembly frame compactor	Consolidation hot cell	2	ND
212-S-085	Traversing carriage	Consolidation hot cell	2	ND
212-N-005	Intercell seal valve with drive	Consolidation hot cell	4	ND
212-S-079	Consolidated mount and rotating container device	Waste-packaging hot cell	2	ND
212-H-037	Bridge crane with electromechanical manipulator (10-ton capacity)	Waste-packaging hot cell	2	ND
212-H-038	Rotating load block (10-ton capacity)	Waste-packaging hot cell	2	ND
212-H-039	Facility grapple (10-ton capacity)	Waste-packaging hot cell	2	ND
212-S-080	Fuel-container-welding station	Waste-packaging hot cell	4	ND

TABLE 3-4

MAJOR WASTE-HANDLING EQUIPMENT IN WASTE-HANDLING BUILDING 2
(continued)

Equipment Number	Description (capacity)	Location	Number of Units	Avail-ability*
212-S-081	Weld inspection station	Waste-packaging hot cell	4	ND
212-N-040	Airlock shield valve with drive	Waste-packaging hot cell/decontam-ination cell	4	ND
212-T-002	Decontamination tank system	Decontamination room/waste-packaging hot cell	2	ND
212-N-041	Airlock shield valve with drive	Waste-packaging hot cell transfer tunnel	4	ND
212-S-084	Container transfer cart	Waste-packaging hot cell	2	ND
212-N-013	Shield door	Crane maintenance room	2	ND
212-N-014	Shield valve with drive	Surface storage vault	6	ND
212-H-013	Container transfer machine	Surface storage vault	1	ND
212-S-086	Storage rack (112 positions)	Surface storage vault	1	ND
212-N-049	Shield valve with drive	Out-transfer bay	1	ND
212-N-022	Ventilation barrier door	Waste transfer tunnel	2	ND
212-N-021	Ventilation barrier rollup door with drive	Out-transfer bay	2	CA
212-Q-007	Air filter frame separator/filter compactor	Cask-unloading hot cell	1	ND
212-Q-008	Air filter frame shredder	Cask-unloading hot cell	1	CA

TABLE 3-4

MAJOR WASTE-HANDLING EQUIPMENT IN WASTE-HANDLING BUILDING 2
(concluded)

Equipment Number	Description (capacity)	Location	Number of Units	Avail-ability*
212-Q-007	Air filter frame separator/filter compactor	Consolidation hot cell	2	ND
212-Q-008	Air filter frame shredder	Consolidation hot cell	2	CA

*CA = commercially available; ND = needs development.

TABLE 3-5

MAJOR WASTE TREATMENT EQUIPMENT

Equipment Number	Description (capacity)	Location	Number of Units	Avail-ability*
215-T-001	Cement storage silo (600 ft^3)	Waste treatment building	1	CA
215-T-002	Cement day tank (15 ft^3)	Waste treatment building	1	CA
215-H-001	Cement feed screw conveyor	Waste treatment building	1	CA
215-Q-004	Cement fill station	Waste treatment building	1	CA
215-T-003	Waste storage tank (5,000 gal)	Waste treatment building	2	CA
215-P-001	Waste recirculation pump (75 gpm)	Waste treatment building	2	CA
215-P-002	Chemical addition pump (5 gpm)	Waste treatment building	1	CA
215-P-003	Waste feed pump (15 gpm)	Waste treatment building	1	CA
215-Q-006	Waste fill and drumming station	Waste treatment building	1	CA

TABLE 3-5

MAJOR WASTE TREATMENT EQUIPMENT
(continued)

Equipment Number	Description (capacity)	Location	Number of Units	Avail-ability*
215-T-004	Waste collection tank (10,000 gal)	Waste treatment building	2	CA
215-P-004	Waste collection tank pump (50 gpm)	Waste treatment building	2	CA
215-Q-005	Sample station	Waste treatment building	1	CA
215-Q-007	Cartridge filter assembly	Waste treatment building	2	CA
215-Q-008	Spent-cartridge-filter-packaging station	Waste treatment building	1	CA
215-H-002	Bridge crane with remote control panel (7.5-ton capacity)	Waste treatment building	1	CA
215-S-003	Filter transfer cask	Waste treatment building	1	CA
215-Q-009	Inspection station	Waste treatment building	1	CA
215-T-006	Resin-mixing tank (50 ft^3)	Waste treatment building	1	CA
215-P-006	Resin-mixing pump (15 gpm)	Waste treatment building	1	CA
215-Q-010	Ion exchanger (50 gpm)	Waste treatment building	2	CA
215-T-005	Recycle monitor tank (10,000 gal)	Waste treatment building	2	CA
215-P-007	Spent resin slurry pump (75 gpm)	Waste treatment building	1	CA
215-P-005	Recycle monitor tank pump (75 gpm)	Waste treatment building	2	CA

TABLE 3-5

MAJOR WASTE TREATMENT EQUIPMENT
(concluded)

Equipment Number	Description (capacity)	Location	Number of Units	Availability*
215-S-001	Shielded forklift, electric battery powered	Waste treatment building	1	CA
215-S-002	Shielded van	No location assigned	1	CA
215-Q-003	Waste compactor (100 ft^3)	Waste treatment building	1	CA
215-Z-001	Scale (5,000 lb)	Waste treatment building	1	CA
215-S-004	Drummed filter transport cask	Waste treatment building	1	CA
215-S-005	Flatbed truck (15 ton)	No location assigned	1	CA

*CA = commercially available.

Figure 3-14 is a conceptual mechanical flow diagram that illustrates the vertical waste emplacement operations performed for each waste container. The corresponding block flow diagram is shown in Figure 3-15. This block flow diagram identifies the steps involved in vertical emplacement, commencing with loading the waste container at the surface facility and terminating with closing the emplacement borehole. A more detailed description of vertical emplacement operations is provided by Stinebaugh and Frostenson (1986).

A list of major equipment required for the vertical emplacement configuration appears in Table 3-7.

3.1.2.2 Horizontal Emplacement

The horizontal waste emplacement operation differs considerably from the vertical process in that more than one waste container is placed in each borehole. As in the vertical case, the same operations sequence is performed for spent fuel, DHLW, and WVHLW.

Figure 3-16 is a conceptual flow diagram that illustrates the horizontal waste emplacement operations performed for each waste container. The final borehole closure process (Steps 4.1, 4.2, and 4.3) is performed only after the prescribed number of waste containers have been emplaced

TABLE 3-6

WASTE EMPLACEMENT SCHEDULE

Year	PWR Containers Intact	PWR Containers Consolidated	BWR Containers Intact	BWR Containers Consolidated	Hardware Containers[a]	DHLW/WVHLW Containers
1998	173	0[b]	145	0[a]	0	0
1999	173	0	145	0[a]	0	0
2000	173	--	145	0[a]	0	0
2001	195	98	164	55	9	0
2002	234	273	196	153	25	0
2003	130	585	109	327	55	194
2004	130	585	109	327	55	436
2005	130	585	109	327	55	800
2006	130	585	109	327	55	800
2007	130	585	109	327	55	800
2008	130	585	109	327	55	800
2009	130	585	109	327	55	800
2010	130	585	109	327	55	800
2011	130	585	109	327	55	800
2012	130	585	109	327	55	800
2013	130	585	109	327	55	800
2014	130	585	109	327	55	800
2015	130	585	109	327	55	800
2016	130	585	109	327	55	800
2017	130	585	109	327	55	800
2018	130	585	109	327	55	800
2019	130	585	109	327	55	800
2020	130	585	109	327	55	800
2021	130	585	109	327	55	800
2022	48	215	40	120	20	800
TOTAL	3,466	11,701	2,906	6,541	1,099	15,030

a. Hardware containers are needed because a container holding consolidated BWR fuel does not have sufficient room to accommodate the hardware from 18 fuel assemblies.

b. Assumes no fuel consolidated at the reactor is received at the repository during Stage 1. The quantities of PWR and BWR containers are, therefore, the maximum expected (worst case) for design purposes. Fuel consolidated at the reactor is received at the repository in canisters that are similar in geometry to fuel assemblies, and, therefore, consolidated fuel does not affect repository operations.

and the necessary standoff distance has been established. The corresponding block flow diagram is presented in Figure 3-17. Stinebaugh et al. (1986) provide a detailed description of the horizontal emplacement operation.

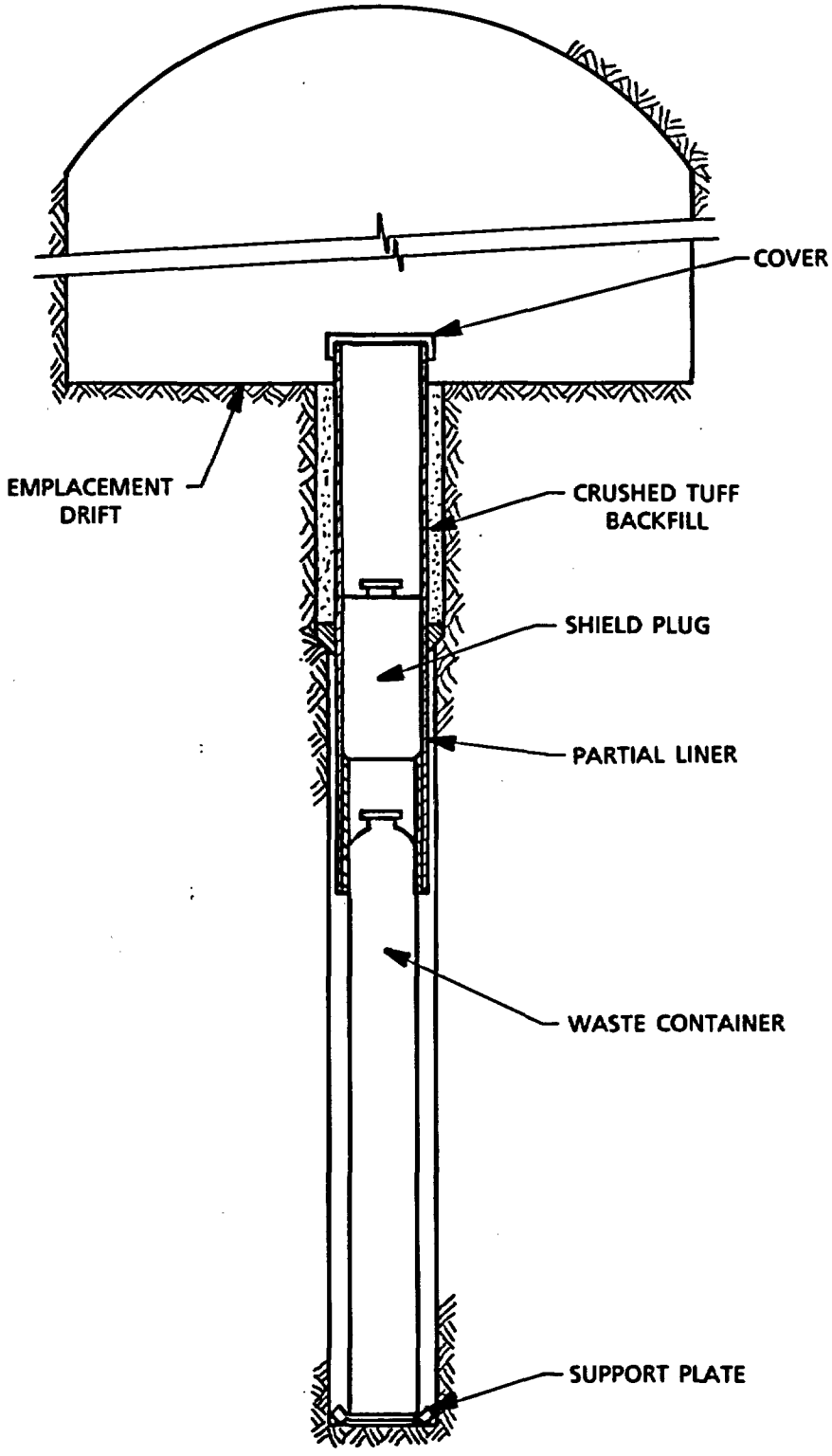

Figure 3-12. Conceptual Design of Vertical Borehole (Modified from Flores, 1986.)

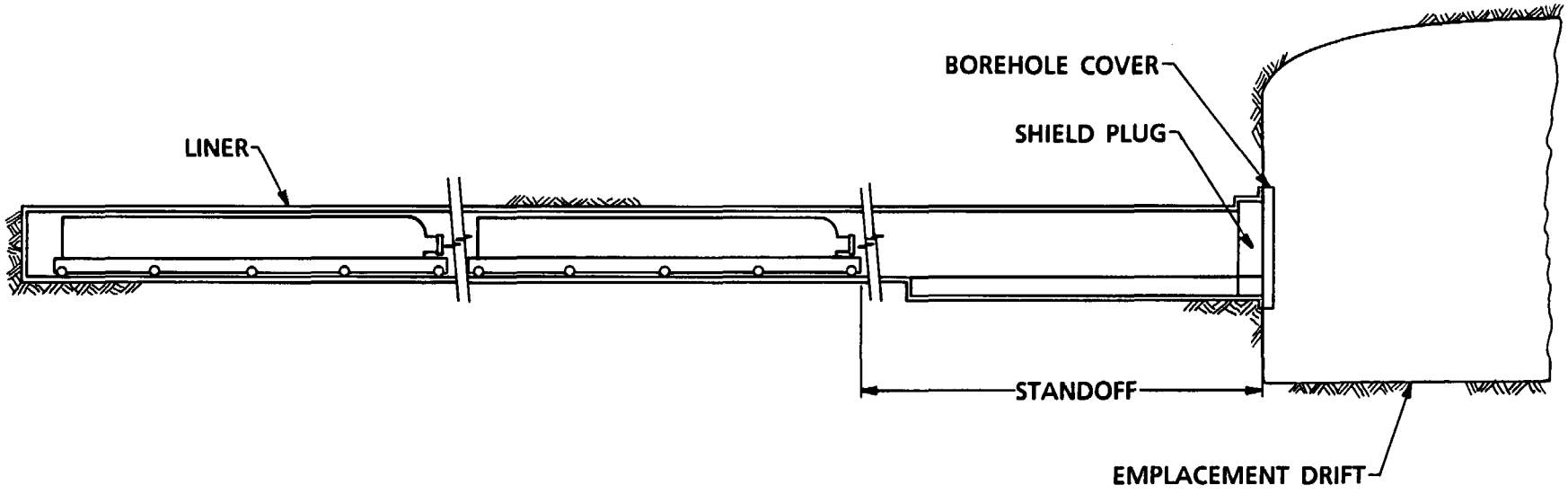

Figure 3-13. Conceptual Design of Horizontal Borehole (Modified from Flores, 1986.)

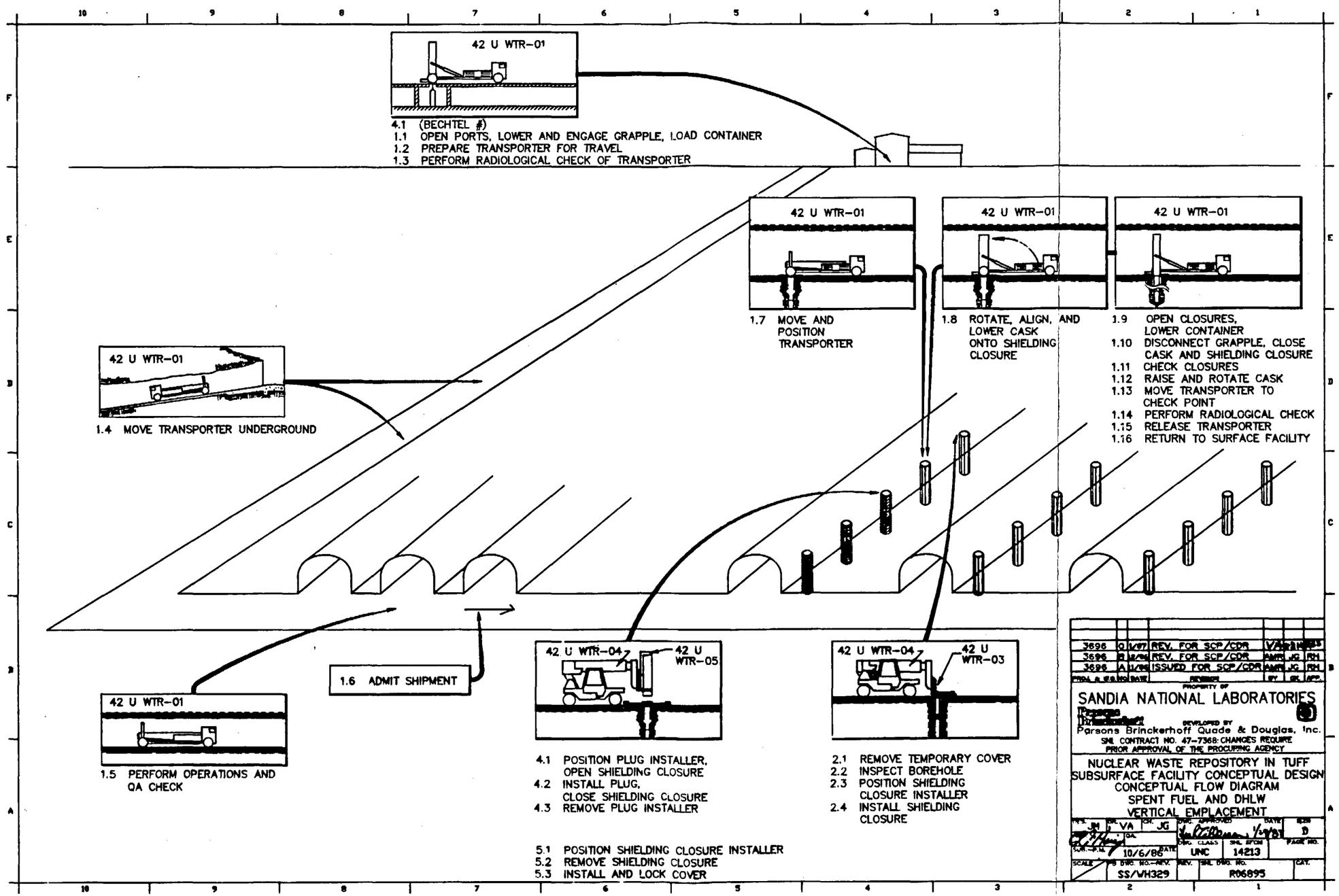
42 U WTR-01
4.1 (BECHTEL #)
1.1 OPEN PORTS, LOWER AND ENGAGE GRAPPLE, LOAD CONTAINER
1.2 PREPARE TRANSPORTER FOR TRAVEL
1.3 PERFORM RADIOLOGICAL CHECK OF TRANSPORTER
42 U WTR-01
1.7 MOVE AND POSITION TRANSPORTER
42 U WTR-01
1.8 ROTATE, ALIGN, AND LOWER CASK ONTO SHIELDING CLOSURE
42 U WTR-01
1.9 OPEN CLOSURES, LOWER CONTAINER
1.10 DISCONNECT GRAPPLE, CLOSE CASK AND SHIELDING CLOSURE
1.11 CHECK CLOSURES
1.12 RAISE AND ROTATE CASK
1.13 MOVE TRANSPORTER TO CHECK POINT
1.14 PERFORM RADIOLOGICAL CHECK
1.15 RELEASE TRANSPORTER
1.16 RETURN TO SURFACE FACILITY
42 U WTR-01
1.4 MOVE TRANSPORTER UNDERGROUND
1.6 ADMIT SHIPMENT
42 U WTR-01
1.5 PERFORM OPERATIONS AND QA CHECK
42 U WTR-04
42 U WTR-05
4.1 POSITION PLUG INSTALLER, OPEN SHIELDING CLOSURE
4.2 INSTALL PLUG, CLOSE SHIELDING CLOSURE
4.3 REMOVE PLUG INSTALLER
42 U WTR-04
42 U WTR-03
2.1 REMOVE TEMPORARY COVER
2.2 INSPECT BOREHOLE
2.3 POSITION SHIELDING CLOSURE INSTALLER
2.4 INSTALL SHIELDING CLOSURE
5.1 POSITION SHIELDING CLOSURE INSTALLER
5.2 REMOVE SHIELDING CLOSURE
5.3 INSTALL AND LOCK COVER
3696 Q 1/87 REV. FOR SCP/CDR
3696 B 12/86 REV. FOR SCP/CDR
3696 A 11/86 ISSUED FOR SCP/CDR
SANDIA NATIONAL LABORATORIES
Parsons Brinckerhoff Quade & Douglas, Inc.
SNL CONTRACT NO. 47-7368: CHANGES REQUIRE PRIOR APPROVAL OF THE PROCURING AGENCY
NUCLEAR WASTE REPOSITORY IN TUFF
SUBSURFACE FACILITY CONCEPTUAL DESIGN
CONCEPTUAL FLOW DIAGRAM
SPENT FUEL AND DHLW
VERTICAL EMPLACEMENT
10/6/86
UNC
14213
SS/WH329
R06895

Figure 3-14.

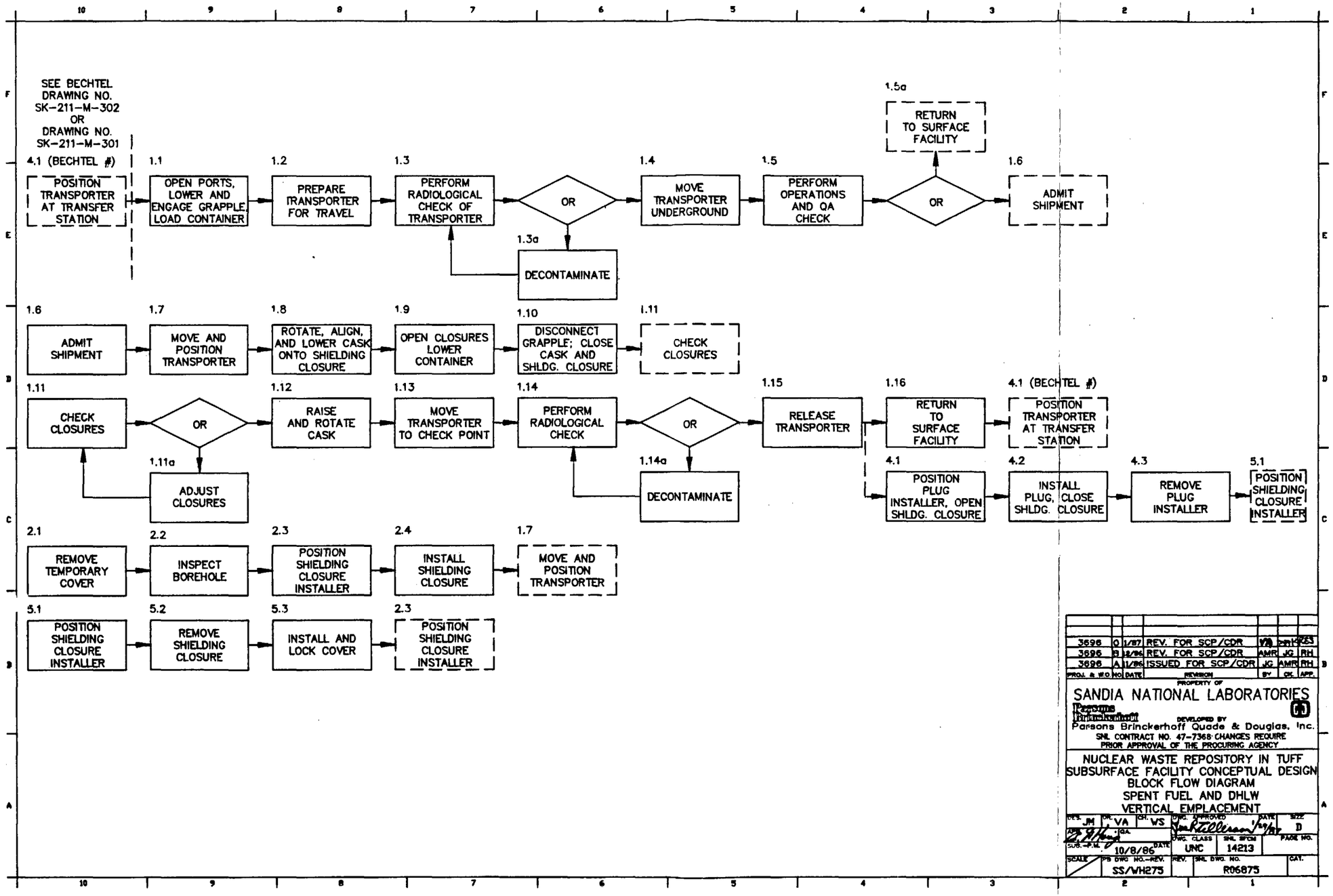
SEE BECHTEL DRAWING NO. SK-211-M-302 OR DRAWING NO. SK-211-M-301
4.1 (BECHTEL #)
POSITION TRANSPORTER AT TRANSFER STATION
1.1
OPEN PORTS, LOWER AND ENGAGE GRAPPLE, LOAD CONTAINER
1.2
PREPARE TRANSPORTER FOR TRAVEL
1.3
PERFORM RADIOLOGICAL CHECK OF TRANSPORTER
OR
1.3a
DECONTAMINATE
1.4
MOVE TRANSPORTER UNDERGROUND
1.5
PERFORM OPERATIONS AND QA CHECK
1.5a
RETURN TO SURFACE FACILITY
OR
1.6
ADMIT SHIPMENT
1.6
ADMIT SHIPMENT
1.7
MOVE AND POSITION TRANSPORTER
1.8
ROTATE, ALIGN, AND LOWER CASK ONTO SHIELDING CLOSURE
1.9
OPEN CLOSURES LOWER CONTAINER
1.10
DISCONNECT GRAPPLE; CLOSE CASK AND SHLDG. CLOSURE
1.11
CHECK CLOSURES
1.11
CHECK CLOSURES
OR
1.11a
ADJUST CLOSURES
1.12
RAISE AND ROTATE CASK
1.13
MOVE TRANSPORTER TO CHECK POINT
1.14
PERFORM RADIOLOGICAL CHECK
OR
1.14a
DECONTAMINATE
1.15
RELEASE TRANSPORTER
1.16
RETURN TO SURFACE FACILITY
4.1 (BECHTEL #)
POSITION TRANSPORTER AT TRANSFER STATION
4.1
POSITION PLUG INSTALLER, OPEN SHLDG. CLOSURE
4.2
INSTALL PLUG, CLOSE SHLDG. CLOSURE
4.3
REMOVE PLUG INSTALLER
5.1
POSITION SHIELDING CLOSURE INSTALLER
2.1
REMOVE TEMPORARY COVER
2.2
INSPECT BOREHOLE
2.3
POSITION SHIELDING CLOSURE INSTALLER
2.4
INSTALL SHIELDING CLOSURE
1.7
MOVE AND POSITION TRANSPORTER
5.1
POSITION SHIELDING CLOSURE INSTALLER
5.2
REMOVE SHIELDING CLOSURE
5.3
INSTALL AND LOCK COVER
2.3
POSITION SHIELDING CLOSURE INSTALLER
3696 0 1/87 REV. FOR SCP/CDR
3696 B 12/86 REV. FOR SCP/CDR AMR JG RH
3696 A 11/86 ISSUED FOR SCP/CDR JG AMR RH
PROJ. & W.O. NO. DATE REVISION BY CK. APP.
PROPERTY OF
SANDIA NATIONAL LABORATORIES
Parsons Brinckerhoff
DEVELOPED BY
Parsons Brinckerhoff Quade & Douglas, Inc.
SNL CONTRACT NO. 47-7368 CHANGES REQUIRE PRIOR APPROVAL OF THE PROCURING AGENCY
NUCLEAR WASTE REPOSITORY IN TUFF
SUBSURFACE FACILITY CONCEPTUAL DESIGN
BLOCK FLOW DIAGRAM
SPENT FUEL AND DHLW
VERTICAL EMPLACEMENT
DES. JM DR. VA CH. WS
SIZE D
SUB.-P.M. 10/8/86 DATE
DWG. CLASS UNC
SNL SFDM 14213
PAGE NO.
SCALE
PB DWG NO.-REV. SS/WH275
REV.
SNL DWG. NO. R06875
CAT.

Figure 3-15.

TABLE 3-7

EQUIPMENT FOR VERTICAL EMPLACEMENT

Equipment Number	Description (capacity)	Location Used	Number of Units[a]	Availability[b]
42 U WTR-01	Waste transporter (vertical)	Surface to underground travel	6	ND
42 U WTR-02	Borehole shielding closure (vertical)	Emplacement panel	12	ND
42 U WTR-03	Cask hoist	Surface facility and emplacement panel	6	ND
42 U WTR-04	Modified forklift (vertical)	Emplacement panel	10	ND
42 U WTR-05	Shield plug installer (vertical)	Emplacement panel	6	ND

a. Includes spares.
b. ND = needs development.

A list of major equipment required for the horizontal emplacement configuration appears in Table 3-8.

3.1.2.3 Equipment Availability

The equipment and components identified for both the vertical and horizontal waste emplacement configurations are new designs that are based on reasonably available technology; i.e., they are similar to equipment or components that have been successfully used under similar conditions or are extrapolations of existing technology that can be developed and demonstrated in a timely manner. Many of the items are modifications of existing, proven hardware; these modifications were neither extensive nor unusual. The items that need the most development are the waste transporters and associated emplacement/retrieval equipment for both the vertical and horizontal configurations. Many commercially available components (running gear, motive power) are used in major systems of these machines; however, the overall designs are new rather than modifications of existing hardware.

The transporters are large and unique, but they are not highly complex or technically sophisticated. Conceptual designs have been completed for the major machines. A working 1/12-scale model of part of the horizontal emplacement mechanism has been fabricated and operated to test

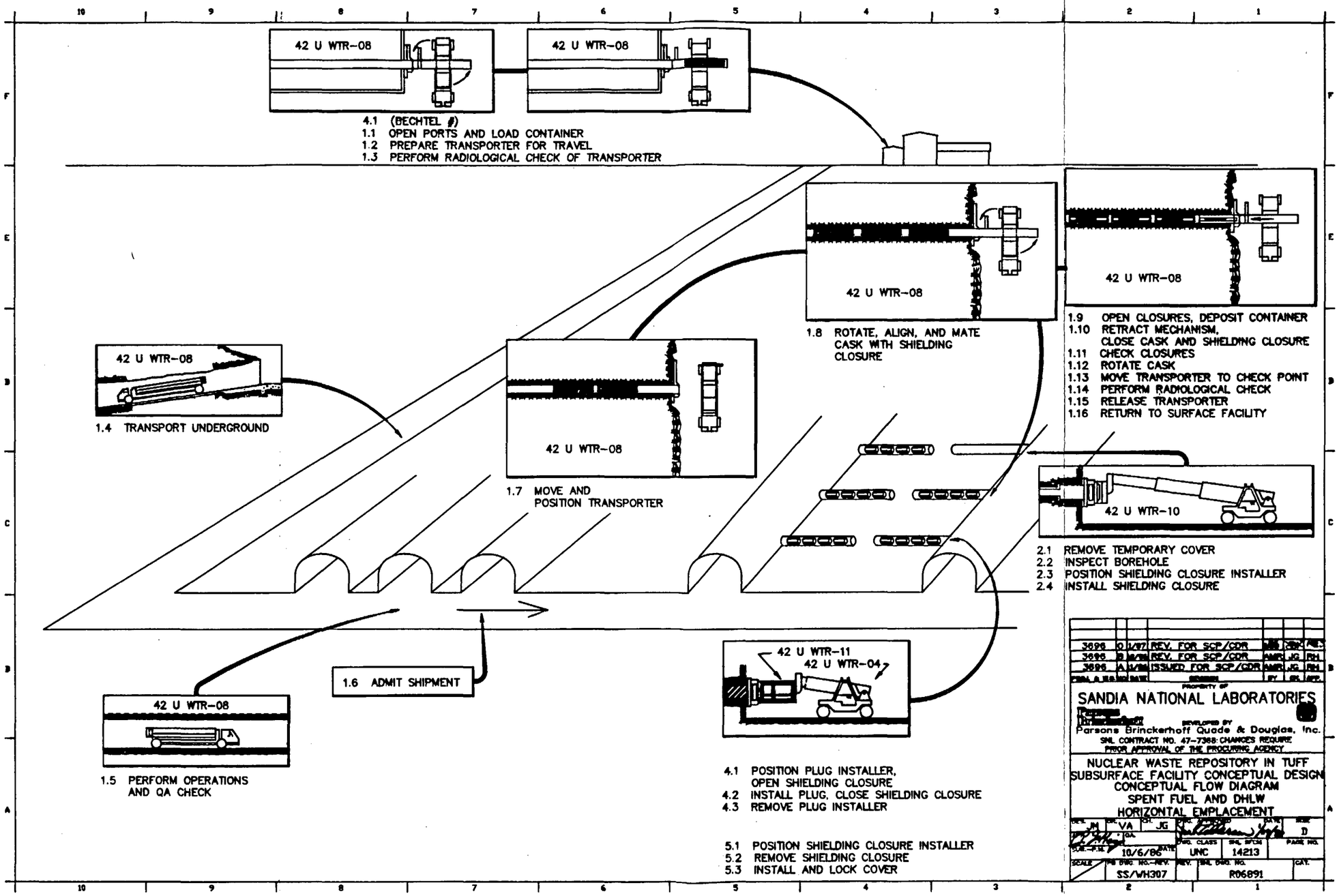
42 U WTR-08
42 U WTR-08
4.1 (BECHTEL #)
1.1 OPEN PORTS AND LOAD CONTAINER
1.2 PREPARE TRANSPORTER FOR TRAVEL
1.3 PERFORM RADIOLOGICAL CHECK OF TRANSPORTER
42 U WTR-08
1.8 ROTATE, ALIGN, AND MATE CASK WITH SHIELDING CLOSURE
42 U WTR-08
1.9 OPEN CLOSURES, DEPOSIT CONTAINER
1.10 RETRACT MECHANISM, CLOSE CASK AND SHIELDING CLOSURE
1.11 CHECK CLOSURES
1.12 ROTATE CASK
1.13 MOVE TRANSPORTER TO CHECK POINT
1.14 PERFORM RADIOLOGICAL CHECK
1.15 RELEASE TRANSPORTER
1.16 RETURN TO SURFACE FACILITY
42 U WTR-08
1.4 TRANSPORT UNDERGROUND
42 U WTR-08
1.7 MOVE AND POSITION TRANSPORTER
42 U WTR-10
2.1 REMOVE TEMPORARY COVER
2.2 INSPECT BOREHOLE
2.3 POSITION SHIELDING CLOSURE INSTALLER
2.4 INSTALL SHIELDING CLOSURE
1.6 ADMIT SHIPMENT
42 U WTR-08
1.5 PERFORM OPERATIONS AND QA CHECK
42 U WTR-11
42 U WTR-04
4.1 POSITION PLUG INSTALLER, OPEN SHIELDING CLOSURE
4.2 INSTALL PLUG, CLOSE SHIELDING CLOSURE
4.3 REMOVE PLUG INSTALLER
5.1 POSITION SHIELDING CLOSURE INSTALLER
5.2 REMOVE SHIELDING CLOSURE
5.3 INSTALL AND LOCK COVER
3696 C 1/87 REV. FOR SCP/CDR
3696 B 10/86 REV. FOR SCP/CDR AMR JG RH
3696 A 11/86 ISSUED FOR SCP/CDR AMR JG RH
PROPERTY OF
SANDIA NATIONAL LABORATORIES
DEVELOPED BY
Parsons Brinckerhoff Quade & Douglas, Inc.
SNL CONTRACT NO. 47-7368: CHANGES REQUIRE PRIOR APPROVAL OF THE PROCURING AGENCY
NUCLEAR WASTE REPOSITORY IN TUFF
SUBSURFACE FACILITY CONCEPTUAL DESIGN
CONCEPTUAL FLOW DIAGRAM
SPENT FUEL AND DHLW
HORIZONTAL EMPLACEMENT
DES. JM
DR. VA
CH. JG
SIZE D
10/6/86
DWG. CLASS UNC
SNL SPCN 14213
PAGE NO.
SCALE
PB DWG. NO.-REV. SS/WH307
SNL DWG. NO. R06891
CAT.

Figure 3-16.

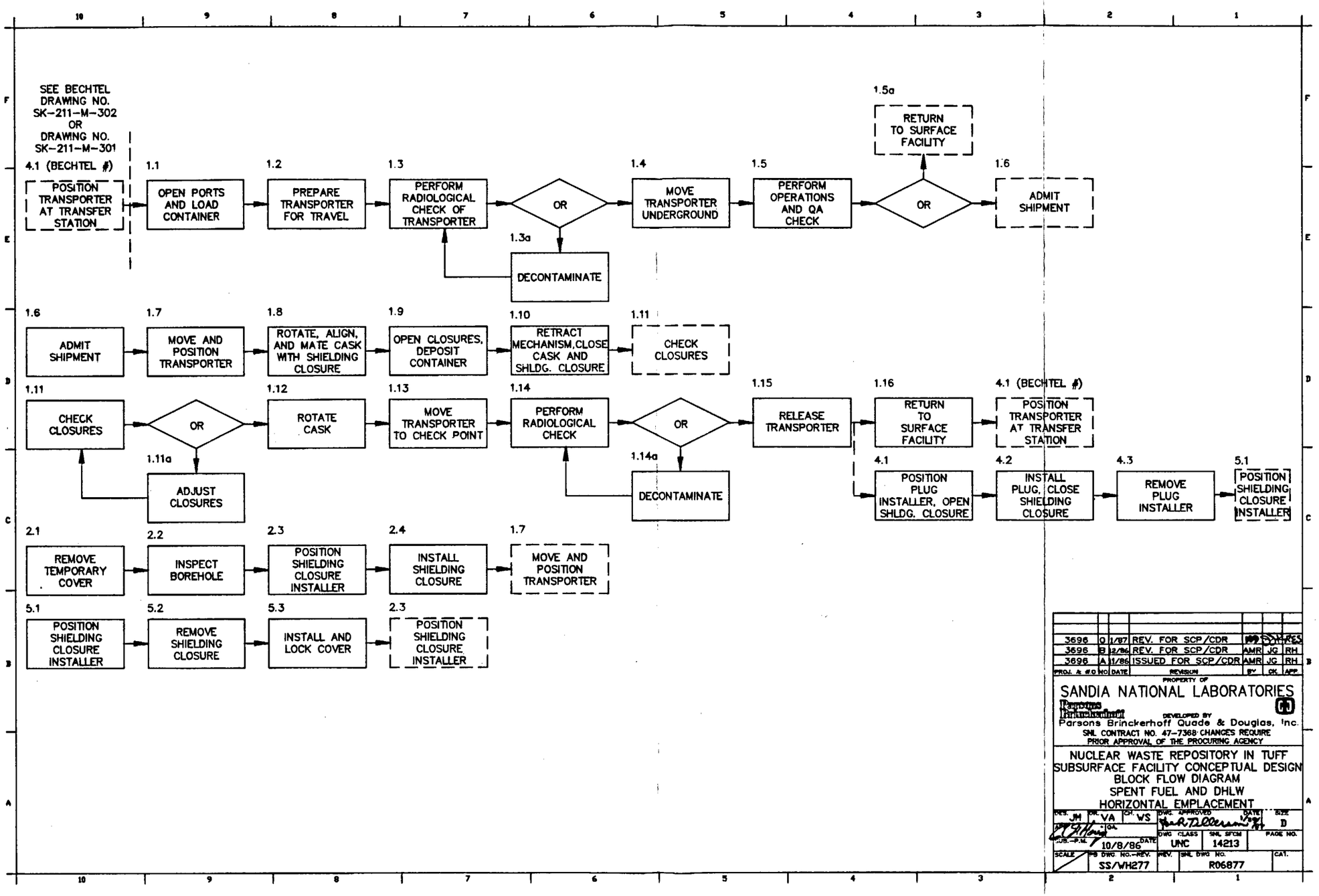
SEE BECHTEL DRAWING NO. SK-211-M-302 OR DRAWING NO. SK-211-M-301
4.1 (BECHTEL #)
POSITION TRANSPORTER AT TRANSFER STATION
1.1
OPEN PORTS AND LOAD CONTAINER
1.2
PREPARE TRANSPORTER FOR TRAVEL
1.3
PERFORM RADIOLOGICAL CHECK OF TRANSPORTER
OR
1.3a
DECONTAMINATE
1.4
MOVE TRANSPORTER UNDERGROUND
1.5
PERFORM OPERATIONS AND QA CHECK
1.5a
RETURN TO SURFACE FACILITY
OR
1.6
ADMIT SHIPMENT
1.6
ADMIT SHIPMENT
1.7
MOVE AND POSITION TRANSPORTER
1.8
ROTATE, ALIGN, AND MATE CASK WITH SHIELDING CLOSURE
1.9
OPEN CLOSURES, DEPOSIT CONTAINER
1.10
RETRACT MECHANISM, CLOSE CASK AND SHLDG. CLOSURE
1.11
CHECK CLOSURES
1.11
CHECK CLOSURES
OR
1.11a
ADJUST CLOSURES
1.12
ROTATE CASK
1.13
MOVE TRANSPORTER TO CHECK POINT
1.14
PERFORM RADIOLOGICAL CHECK
OR
1.14a
DECONTAMINATE
1.15
RELEASE TRANSPORTER
1.16
RETURN TO SURFACE FACILITY
4.1 (BECHTEL #)
POSITION TRANSPORTER AT TRANSFER STATION
4.1
POSITION PLUG INSTALLER, OPEN SHLDG. CLOSURE
4.2
INSTALL PLUG, CLOSE SHIELDING CLOSURE
4.3
REMOVE PLUG INSTALLER
5.1
POSITION SHIELDING CLOSURE INSTALLER
2.1
REMOVE TEMPORARY COVER
2.2
INSPECT BOREHOLE
2.3
POSITION SHIELDING CLOSURE INSTALLER
2.4
INSTALL SHIELDING CLOSURE
1.7
MOVE AND POSITION TRANSPORTER
5.1
POSITION SHIELDING CLOSURE INSTALLER
5.2
REMOVE SHIELDING CLOSURE
5.3
INSTALL AND LOCK COVER
2.3
POSITION SHIELDING CLOSURE INSTALLER
3696 Q 1/87 REV. FOR SCP/CDR
3696 B 12/86 REV. FOR SCP/CDR AMR JG RH
3696 A 11/86 ISSUED FOR SCP/CDR AMR JG RH
PROJ. & #0 NO DATE REVISION BY CK. APP.
PROPERTY OF
SANDIA NATIONAL LABORATORIES
DEVELOPED BY
Parsons Brinckerhoff Quade & Douglas, Inc.
SNL CONTRACT NO. 47-7368 CHANGES REQUIRE PRIOR APPROVAL OF THE PROCURING AGENCY
NUCLEAR WASTE REPOSITORY IN TUFF
SUBSURFACE FACILITY CONCEPTUAL DESIGN
BLOCK FLOW DIAGRAM
SPENT FUEL AND DHLW
HORIZONTAL EMPLACEMENT
DES. JM DWN. VA CH. VS
DWG. APPROVED DATE SIZE D
JOB.-P.M. 10/8/86 DATE
DWG. CLASS UNC SNL SFCM 14213 PAGE NO.
SCALE PB DWG. NO.-REV. SS/WH277 REV. SNL DWG. NO. R06877 CAT.

Figure 3-17.

TABLE 3-8

EQUIPMENT FOR HORIZONTAL EMPLACEMENT

Equipment Number	Description (capacity)	Location Used	Number of Units[a]	Availability[b]
42 U WTR-06	Waste transporter (horizontal)	Surface to underground travel	6	ND
42 U WTR-07	Borehole shielding closure (horizontal)	Emplacement panel	6	ND
42 U WTR-08	Cask emplacement/ retrieval mechanism	Surface facility and emplacement panel	6	ND
42 U WTR-09	Modified forklift (horizontal)	Emplacement panel	4	ND
42 U WTR-10	Shield plug installer (horizontal)	Emplacement panel	4	ND

a. Includes spares.
b. ND = needs development.

the emplacement concepts. As a result, some concepts have been verified, and others are being redesigned based on experience gained from testing the model.

3.2 Waste Retrieval

3.2.1 Retrieval Philosophy

The DOE's current retrieval philosophy is explained in Appendix D of the Generic Requirements document (GR) (DOE, 1986). Applications specific to the Nevada Nuclear Waste Storage Investigations (NNWSI) Project are contained in an NNWSI strategy paper (Flores, 1986). The DOE's position on retrievability includes the following important general elements.

- Retrieval is the intentional removal of previously emplaced waste for the purposes of protecting the environment or public health and safety or for the recovery of resources contained in spent fuel. Removal of waste for any other reason is not considered an act of retrieval.

- The repository will be designed, constructed, and operated to maintain the option of retrieving any or all of the emplaced

waste as a planned contingency operation; therefore, the equipment and facilities necessary to carry out full repository retrieval operations do not have to be constructed at the time of repository construction. For design purposes, the option to start retrieval must be available for a period of 50 yr after waste emplacement activities have begun.

- The retrieval process would be completed as quickly as is safely practicable. The safety of the public and repository workers would be the primary concern in establishing the time for retrieval.

- The design of equipment and facilities for retrieval will be based on technology that is reasonably available at the time of license application (LA). In addition, the design of retrieval methods and proof-of-principle demonstrations must be completed by the time of LA. Development of the prototypes, if required, will occur following submission of the LA.

The retrieval philosophy outlined above is implemented through the development of design criteria, retrieval conditions, reference designs, and demonstrations. The retrieval-related design criteria were developed during the performance allocation process [described in Section 8.3.5.2 of the Site Characterization Plan (SCP) (DOE, in preparation)] and are presented in Section 2.4.4 of this report. These design criteria are combined with design criteria established by other information needs and are presented in Appendix P. An explanation of design issues and related information needs are presented in Chapter 8 of this document.

Repository conditions must be predicted for the 50-yr retrievability period to provide input to the design criteria, the reference repository design, and the development of retrieval demonstrations. A discussion of currently defined repository conditions is contained in Section 6.3.1 and Appendix J. In the future, the probability-based concept shown in Figure 2-11 will be used.

The current underground design includes the following concepts that respond to the requirement for retrievability:

- the 50/50 goal (50°C temperature for 50 yr after emplacement) to enhance long-term drift stability and to allow reentry with an acceptable level of effort (Section 6.3.1),

- a project decision not to backfill the drifts during the preclosure period to facilitate access to the emplacement boreholes,

- the use of borehole liners to provide reliable access to the waste containers,

- the use of a dolly in the horizontal concept to reduce loads on the waste container during removal operations (Section 4.5.3),

- an operating requirement for periodic inspection and maintenance of the ramp and drifts, and

- consideration of both normal and off-normal retrieval conditions during design development (Appendix J).

As outlined in Appendix D of the GR (DOE, 1986), proof-of-principle demonstrations will be performed before LA to verify the feasibility of retrieval and the use of reasonably available technology for nonstandard mechanical equipment. After submission of the LA, unanswered questions may exist concerning the performance of retrieval equipment in the repository environment in a production mode. In this instance, prototypical equipment will be developed and tested to verify performance. In addition, removal of waste containers for performance confirmation, although not considered a retrieval operation, will incidentally demonstrate the continued ability to retrieve emplaced waste. Additional discussion of retrieval demonstrations is contained in Section 6.3.2.

3.2.2 Waste Retrieval Operations

This section describes retrieval operations under normal and off-normal conditions. Normal conditions are those conditions under which the retrieval process can be performed using standard equipment and procedures. Minor maintenance and cleanup may be required (Flores, 1986). Off-normal conditions are those under which the retrieval process will require nonstandard equipment or procedures. The existence of an off-normal condition does not mean that the retrieval process will be particularly difficult or hazardous; in general, it means that modified equipment and procedures may be used. For example, if excessive temperatures are encountered in an emplacement drift, it may be decided to extend the cool-down period, perform the retrieval using additional thermal protection for workers, or combine several alternatives. Results from preliminary studies to identify off-normal conditions are contained in Appendix L-2.

Waste retrieval planning and operation are organized around four functions essential to the successful retrieval of waste containers:

- provision for access to the emplacement boreholes,
- provision for access to the waste containers,
- removal of waste containers from the borehole, and
- transport and delivery of waste containers to the surface facility.

These functions and their related activities are described in Appendix J. Their use in planning and performing retrieval operations is summarized in the following sections.

A detailed waste retrieval plan will be developed after safe and functional access to the emplacement boreholes and waste containers has been established and available data have been examined. The retrieval plan will establish the required removal rate and schedule for the waste containers, based on the mandate to retrieve. The sequence and schedule for removal of waste from different panels and within a given panel will be established, based on the efficiency of the operation, the receipt

capabilities of the surface facility, and any known off-normal conditions that may exist. The retrieval plan will include the sequence of operations and the equipment needed to prepare each emplacement drift and borehole for removal operations, as well as the sequence of operations and equipment needed to remove the waste containers and transport them to the surface storage facility. Procedures and equipment needed for detecting, assessing, and dealing with expected off-normal conditions and emergencies will also be established.

3.2.2.1 Retrieval Operations Under Normal Conditions

3.2.2.1.1 Provision for Access to the Boreholes

To ensure safe, reliable access to the boreholes, the following activities are performed:

- review of emplacement drift documentation,
- assessment of the emplacement drift,
- initiation of emplacement drift ventilation, and
- minor maintenance and repair of the emplacement drift.

3.2.2.1.2 Provision for Access to the Waste Containers

To ensure safe, reliable access to the waste containers, the following activities are performed:

- review of emplacement borehole documentation,
- assessment of the emplacement borehole, and
- maintenance and repair of the emplacement borehole closure.

3.2.2.1.3 Removal of Waste Containers from the Boreholes

Removal of Waste Containers from Vertical Boreholes

A block flow diagram showing the steps performed in waste removal operations for vertical boreholes under normal conditions is shown in Figure 3-18.

Before waste is removed from each vertical borehole, the borehole must be prepared to maintain shielding of the waste container as it is lifted from the borehole into the transporter cask. The borehole is prepared by (1) removing the borehole cover, (2) installing the borehole shielding closure, and (3) removing the shield plug. Blocks 1.1 through 2.5 and 5.1 through 5.5a of Figure 3-18 represent these operations. Blocks 3.1 through 3.6 of Figure 3-18 represent removal of the waste container from a vertical borehole (lifting the waste container from the borehole into a shielded cask).

The equipment used for removing waste from vertical boreholes under normal conditions is identical to that listed for waste emplacement (Table 3-7). This equipment is described by Stinebaugh and Frostenson (1986). Development and demonstration of this equipment are described in Appendix D of this report.

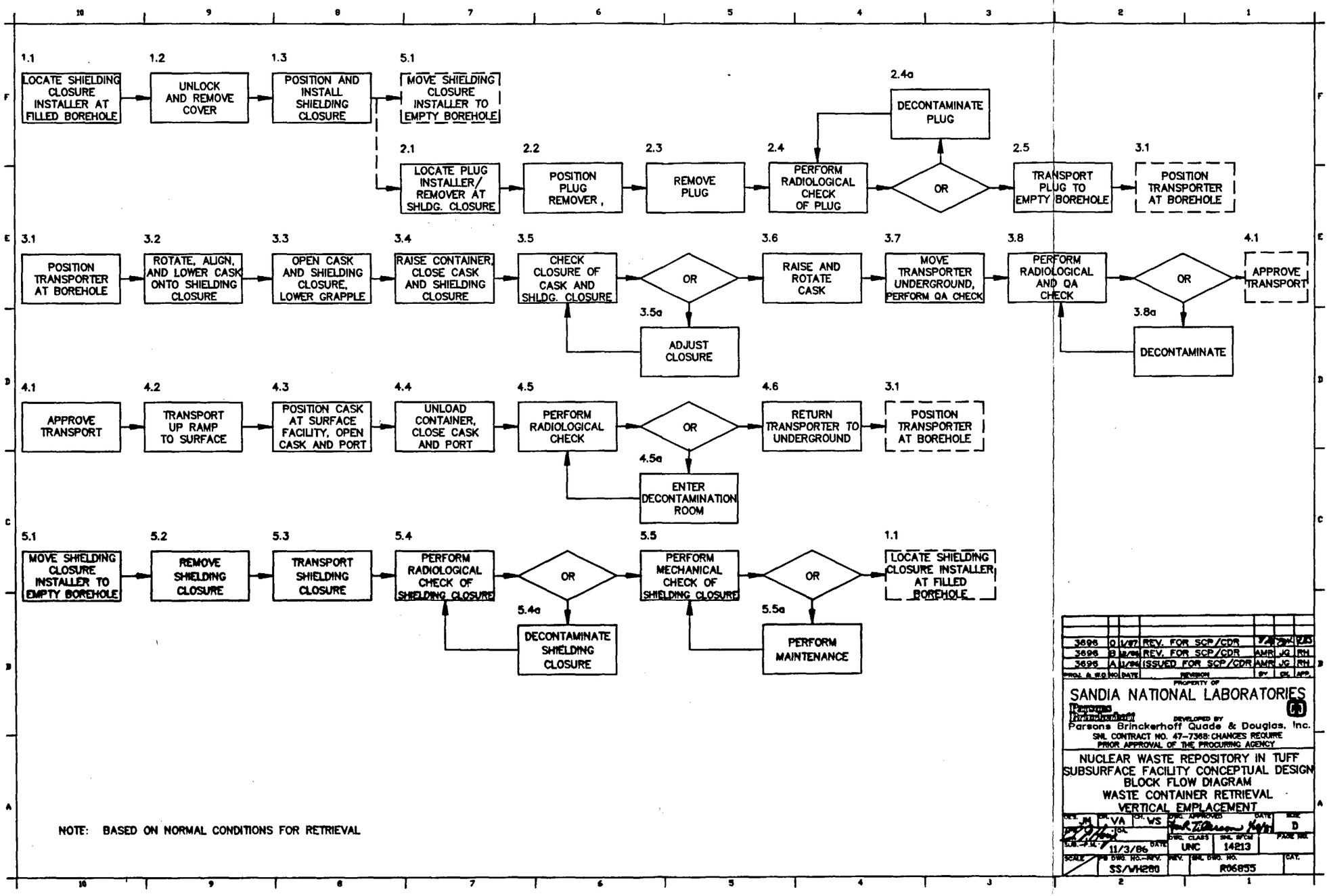
1.1
LOCATE SHIELDING CLOSURE INSTALLER AT FILLED BOREHOLE
1.2
UNLOCK AND REMOVE COVER
1.3
POSITION AND INSTALL SHIELDING CLOSURE
5.1
MOVE SHIELDING CLOSURE INSTALLER TO EMPTY BOREHOLE
2.1
LOCATE PLUG INSTALLER/ REMOVER AT SHLDG. CLOSURE
2.2
POSITION PLUG REMOVER,
2.3
REMOVE PLUG
2.4
PERFORM RADIOLOGICAL CHECK OF PLUG
2.4a
DECONTAMINATE PLUG
OR
2.5
TRANSPORT PLUG TO EMPTY BOREHOLE
3.1
POSITION TRANSPORTER AT BOREHOLE
3.1
POSITION TRANSPORTER AT BOREHOLE
3.2
ROTATE, ALIGN, AND LOWER CASK ONTO SHIELDING CLOSURE
3.3
OPEN CASK AND SHIELDING CLOSURE, LOWER GRAPPLE
3.4
RAISE CONTAINER, CLOSE CASK AND SHIELDING CLOSURE
3.5
CHECK CLOSURE OF CASK AND SHLDG. CLOSURE
OR
3.5a
ADJUST CLOSURE
3.6
RAISE AND ROTATE CASK
3.7
MOVE TRANSPORTER UNDERGROUND, PERFORM QA CHECK
3.8
PERFORM RADIOLOGICAL AND QA CHECK
OR
3.8a
DECONTAMINATE
4.1
APPROVE TRANSPORT
4.1
APPROVE TRANSPORT
4.2
TRANSPORT UP RAMP TO SURFACE
4.3
POSITION CASK AT SURFACE FACILITY, OPEN CASK AND PORT
4.4
UNLOAD CONTAINER, CLOSE CASK AND PORT
4.5
PERFORM RADIOLOGICAL CHECK
OR
4.5a
ENTER DECONTAMINATION ROOM
4.6
RETURN TRANSPORTER TO UNDERGROUND
3.1
POSITION TRANSPORTER AT BOREHOLE
5.1
MOVE SHIELDING CLOSURE INSTALLER TO EMPTY BOREHOLE
5.2
REMOVE SHIELDING CLOSURE
5.3
TRANSPORT SHIELDING CLOSURE
5.4
PERFORM RADIOLOGICAL CHECK OF SHIELDING CLOSURE
OR
5.4a
DECONTAMINATE SHIELDING CLOSURE
5.5
PERFORM MECHANICAL CHECK OF SHIELDING CLOSURE
OR
5.5a
PERFORM MAINTENANCE
1.1
LOCATE SHIELDING CLOSURE INSTALLER AT FILLED BOREHOLE
NOTE: BASED ON NORMAL CONDITIONS FOR RETRIEVAL
3696 Q 1/87 REV. FOR SCP/CDR
3696 B 10/86 REV. FOR SCP/CDR AMR JG RH
3696 A 11/86 ISSUED FOR SCP/CDR AMR JG RH
PROJ. & SEQ. NO. DATE REVISION BY CK. APP.
PROPERTY OF
SANDIA NATIONAL LABORATORIES
Parsons Brinckerhoff
DEVELOPED BY
Parsons Brinckerhoff Quade & Douglas, Inc.
SNL CONTRACT NO. 47-7368-CHANGES REQUIRE PRIOR APPROVAL OF THE PROCURING AGENCY
NUCLEAR WASTE REPOSITORY IN TUFF
SUBSURFACE FACILITY CONCEPTUAL DESIGN
BLOCK FLOW DIAGRAM
WASTE CONTAINER RETRIEVAL
VERTICAL EMPLACEMENT
DES. JM CK. VA CH. WS
DWG. APPROVED DATE SIZE D
DWG. CLASS SNL SPEM PAGE NO.
SUB.-P.M. DATE 11/3/86
UNC 14213
SCALE PB DWG. NO.-REV. SS/WH280
REV. SNL DWG. NO. R06855
CAT.

Figure 3-18.

Removal of Waste Containers from Horizontal Boreholes

A block flow diagram showing the steps performed to remove waste from horizontal boreholes under normal conditions is shown in Figure 3-19.

Before removing waste from a horizontal borehole, the borehole must be prepared for removal operations. This preparation involves replacing the borehole cover with a borehole shielding closure so that shielding can be maintained while the shield plug and the waste container are being removed from the borehole. Blocks 1.1 through 2.5 and 5.1 through 5.5a of Figure 3-19 represent these operations. These operations are the reverse of those used for horizontal borehole closure after waste emplacement, and the same equipment is used in both operations.

Two concepts are being considered for removing waste containers from horizontal boreholes. The first of these, which is the baseline design concept, is described by Stinebaugh et al. (1986). An alternative design concept is currently under consideration because it may enhance the ability to remove waste under off-normal conditions. Removal operations for both design concepts are detailed in Appendix J. Blocks 3.1 through 3.6 of Figure 3-19 represent removal of a waste container using the baseline design concept.

The equipment needed for the baseline concept for removal of waste from horizontal boreholes under normal conditions is identical to that listed in Table 3-8 for horizontal waste emplacement. In addition to the equipment listed in Table 3-8, the alternative waste removal concept requires four retrieval cart systems (Equipment Number 42 UWTR-11) used in the emplacement panel. The retrieval cart system will need development only if the alternative waste removal concept is adopted or if the system is needed for off-normal conditions. Development and demonstration of retrieval equipment are discussed in Appendix D of this report.

3.2.2.1.4 Transport and Delivery of Waste Containers to the Surface Facility

To prepare for transport and delivery of waste containers, the following activities are performed:

- preparation of the waste-handling building,
- inspection of retrieval equipment, and
- verification of operator training.

For the vertical emplacement concept, Blocks 3.7 through 4.4 of Figure 3-18 delineate the steps for transporting the waste container to the surface and depositing it in a surface storage vault. Blocks 3.7 through 4.4 of Figure 3-19 illustrate the same procedures for the horizontal concept.

3.2.2.2 Retrieval Operations Under Off-Normal Conditions

It is recognized that conditions may arise that could prevent waste retrieval using standard equipment and procedures. Under such off-normal conditions, it will be necessary to use special equipment and/or procedures for waste retrieval.

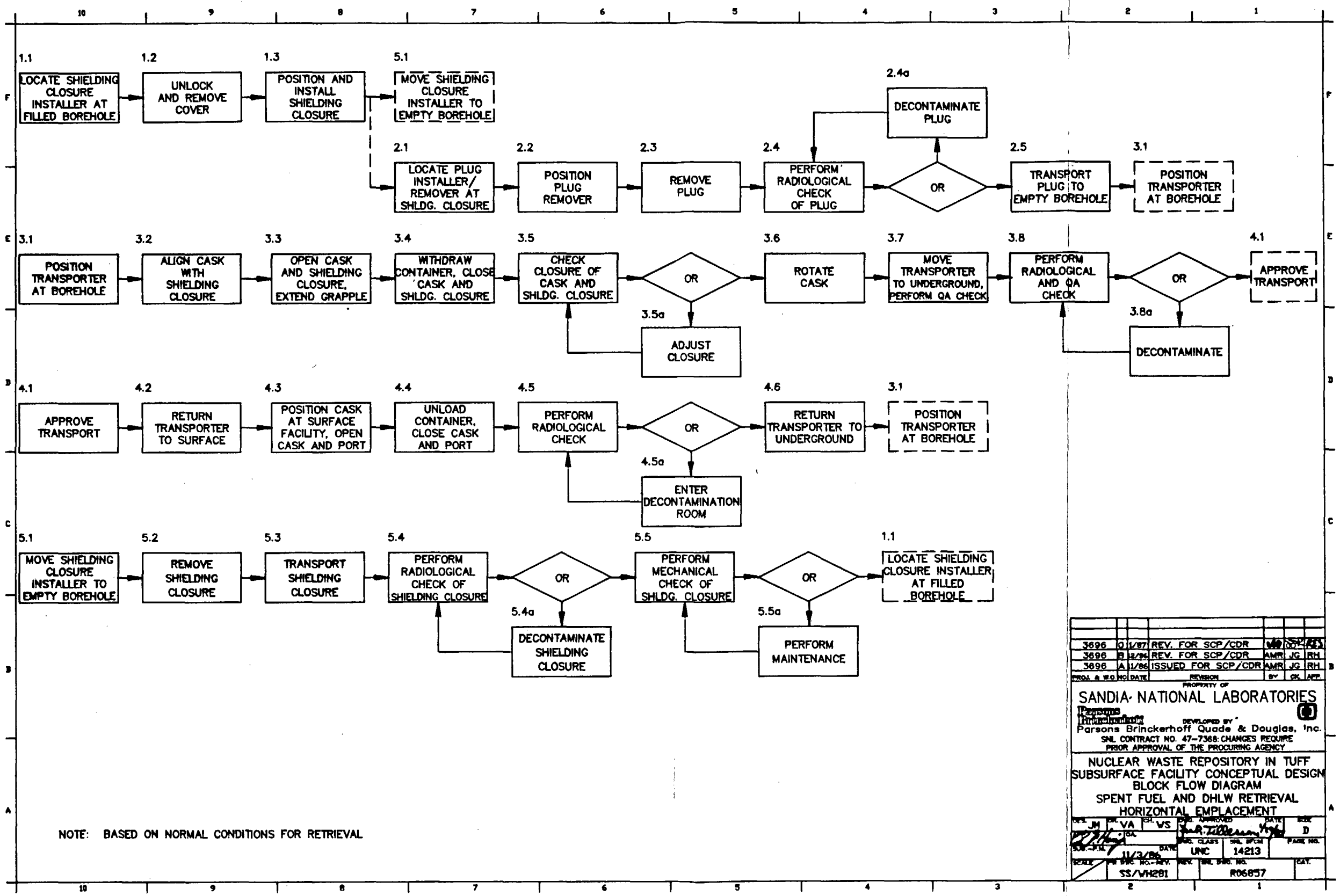
1.1 LOCATE SHIELDING CLOSURE INSTALLER AT FILLED BOREHOLE
1.2 UNLOCK AND REMOVE COVER
1.3 POSITION AND INSTALL SHIELDING CLOSURE
5.1 MOVE SHIELDING CLOSURE INSTALLER TO EMPTY BOREHOLE
2.1 LOCATE PLUG INSTALLER/ REMOVER AT SHLDG. CLOSURE
2.2 POSITION PLUG REMOVER
2.3 REMOVE PLUG
2.4 PERFORM RADIOLOGICAL CHECK OF PLUG
2.4a DECONTAMINATE PLUG
OR
2.5 TRANSPORT PLUG TO EMPTY BOREHOLE
3.1 POSITION TRANSPORTER AT BOREHOLE
3.1 POSITION TRANSPORTER AT BOREHOLE
3.2 ALIGN CASK WITH SHIELDING CLOSURE
3.3 OPEN CASK AND SHIELDING CLOSURE, EXTEND GRAPPLE
3.4 WITHDRAW CONTAINER, CLOSE CASK AND SHLDG. CLOSURE
3.5 CHECK CLOSURE OF CASK AND SHLDG. CLOSURE
OR
3.5a ADJUST CLOSURE
3.6 ROTATE CASK
3.7 MOVE TRANSPORTER TO UNDERGROUND, PERFORM QA CHECK
3.8 PERFORM RADIOLOGICAL AND QA CHECK
OR
3.8a DECONTAMINATE
4.1 APPROVE TRANSPORT
4.1 APPROVE TRANSPORT
4.2 RETURN TRANSPORTER TO SURFACE
4.3 POSITION CASK AT SURFACE FACILITY, OPEN CASK AND PORT
4.4 UNLOAD CONTAINER, CLOSE CASK AND PORT
4.5 PERFORM RADIOLOGICAL CHECK
OR
4.5a ENTER DECONTAMINATION ROOM
4.6 RETURN TRANSPORTER TO UNDERGROUND
3.1 POSITION TRANSPORTER AT BOREHOLE
5.1 MOVE SHIELDING CLOSURE INSTALLER TO EMPTY BOREHOLE
5.2 REMOVE SHIELDING CLOSURE
5.3 TRANSPORT SHIELDING CLOSURE
5.4 PERFORM RADIOLOGICAL CHECK OF SHIELDING CLOSURE
OR
5.4a DECONTAMINATE SHIELDING CLOSURE
5.5 PERFORM MECHANICAL CHECK OF SHLDG. CLOSURE
OR
5.5a PERFORM MAINTENANCE
1.1 LOCATE SHIELDING CLOSURE INSTALLER AT FILLED BOREHOLE
NOTE: BASED ON NORMAL CONDITIONS FOR RETRIEVAL
3696 Q 1/87 REV. FOR SCP/CDR
3696 B 12/86 REV. FOR SCP/CDR AMR JG RH
3696 A 11/86 ISSUED FOR SCP/CDR AMR JG RH
PROJ. & W.O. NO. DATE REVISION BY CK. APP.
PROPERTY OF
SANDIA NATIONAL LABORATORIES
Parsons Brinckerhoff
DEVELOPED BY
Parsons Brinckerhoff Quade & Douglas, Inc.
SNL CONTRACT NO. 47-7368: CHANGES REQUIRE PRIOR APPROVAL OF THE PROCURING AGENCY
NUCLEAR WASTE REPOSITORY IN TUFF
SUBSURFACE FACILITY CONCEPTUAL DESIGN
BLOCK FLOW DIAGRAM
SPENT FUEL AND DHLW RETRIEVAL
HORIZONTAL EMPLACEMENT
DES. JM DR. VA CH. VS
DWG. APPROVED
DATE
SIZE D
DWG. CLASS UNC
SNL SPCM 14213
PAGE NO.
11/3/86
SCALE
PB DWG. NO.-REV. SS/WH281
REV.
SNL DWG. NO. R06857
CAT.

Figure 3-19.

Off-normal conditions theoretically can occur at any time during waste retrieval operations. The general approach to dealing with off-normal conditions consists of the following steps:

- assessment of off-normal conditions to determine the cause and possible remedies;
- development of an off-normal retrieval plan, based on an assessment of the conditions and the availability of equipment and procedures;
- correction or mitigation of off-normal conditions; and
- completion of waste retrieval operations.

The procedures and equipment needed for responding to off-normal conditions depend on the nature and severity of the conditions, as well as on the emplacement configuration. Concepts for these procedures and equipment to respond to many different off-normal conditions, ranging from mild to severe, have been developed and are discussed in detail in Appendix J. The concepts are listed and briefly discussed below.

Further work is needed to determine which conditions would affect retrieval operations sufficiently and are likely enough to occur that special equipment and operations must be developed and tested before LA; therefore, presentation of concepts for dealing with a given off-normal condition should not be interpreted as an indication that all potential off-normal conditions have been considered or that any particular condition is expected or even credible. Rather, these concepts are presented because of the importance placed on the ability to maintain the retrieval option and to demonstrate that concepts for maintaining that option have been developed for a wide variety of conditions.

3.2.2.2.1 Provision for Access to the Emplacement Boreholes Under Off-Normal Conditions

Concepts have been developed for

- repairing the rock support system and removing rockfall in the ramp and drifts and
- correcting ventilation system malfunctions.

Additional discussion is provided in Appendix J.

3.2.2.2.2 Provision for Access to the Waste Containers Under Off-Normal Conditions

Concepts have been developed for

- surmounting equipment malfunction,
- removing a bound shield plug,
- inspecting the boreholes, and
- repairing a collapsed liner (horizontal emplacement concept).

The concepts for these operations are described in Appendix J.

3.2.2.2.3 Removal of Waste Containers from the Boreholes Under Off-Normal Conditions

Removal of Waste from Vertical Boreholes

Concepts have been developed for performing the following operations in the vertical emplacement configuration:

- manually overriding shield doors and the waste container hoist system in the event of equipment malfunction,
- coring to remove a shield plug bound in a borehole,
- inspecting boreholes to determine the nature of off-normal conditions,
- removing a waste container that has lost its pintle,
- cutting the partial borehole liner so that coring operations can be conducted to remove a waste container bound in a borehole, and
- coring to remove a waste container bound in the borehole.

These operations are described in more detail in Appendix J.

The major equipment used for removing waste from vertical boreholes under off-normal conditions is listed in Table 3-9. Although design concepts for this equipment must continue to be developed, detailed design, fabrication, and testing of the equipment for any of the systems are required only if it is determined that the associated off-normal conditions are credible (i.e., have a significant probability of occurring). Development of equipment systems needed for dealing with credible off-normal conditions is believed possible using existing technology. For example, similar systems exist in the drilling and mining industries that could be modified and extended for this application. Design considerations for this application, as well as development and demonstration of this equipment, are discussed in Appendix D of this report.

Removal of Waste from Horizontal Boreholes

Concepts have been developed for performing the following operations in the horizontal emplacement configuration:

- manually overriding shield doors and the waste container emplacement/retrieval system in the event of equipment malfunction or failure,
- coring to remove a shield plug bound in the borehole,
- inspecting a borehole to determine the nature of off-normal conditions,

TABLE 3-9

EQUIPMENT FOR REMOVAL OF WASTE FROM VERTICAL BOREHOLES UNDER OFF-NORMAL CONDITIONS

Equipment Number	Description	Location Used	Number of Units[a]	Availability[b]
42 U WTR-12	Shield-plug-coring system (vertical)	Emplacement panel	1	ND
42 U WTR-13	Vertical borehole inspection system	Emplacement panel	1	ND
42 U WTR-14	Waste container removal sleeve system	Emplacement panel	1	ND
42 U WTR-15	Liner-cutting system (vertical)	Emplacement panel	1	ND
42 U WTR-16	Waste-container-coring system (vertical)	Emplacement panel	1	ND

a. Includes spares.
b. ND = needs development.

- removing waste containers in the event of a coupling failure between waste container dollies,
- uncoupling waste container dollies for removal of unbound containers in the event that a single container is bound in the borehole,
- repairing a section of collapsed or deformed borehole liner,
- providing alternate access to blocked waste containers by excavating a new drift to intersect the end of the borehole,
- reaming the borehole and liner to accept a core bit and barrel to permit removal of a bound waste container,
- cutting the liner for coring operations to remove a bound waste container, and
- coring to remove a waste container that is bound in the borehole.

These concepts are described in more detail in Appendix J.

The major equipment used for waste removal operations under off-normal conditions for horizontal boreholes is listed in Table 3-10. Although design concepts for this equipment must continue to be developed, detailed design, fabrication, and testing of the equipment for any of the systems are not necessary unless it is determined that the associated off-normal conditions are credible (i.e., have a significant probability of occurring). Development of equipment needed for dealing with credible off-normal conditions is believed to be possible using existing technology. For example, systems similar to those needed to remove waste from a repository under off-normal conditions are currently used by the drilling and mining industries. These systems could be modified and extended for use in a repository. Development and demonstration of the equipment are discussed in Appendix D of this report.

TABLE 3-10

EQUIPMENT FOR REMOVAL OF WASTE FROM HORIZONTAL BOREHOLES UNDER OFF-NORMAL CONDITIONS

Equipment Number	Description	Location Used	Number of Units[a]	Availability[b]
42 U WTR-11	Retrieval cart system	Emplacement panel	4	ND
42 U WTR-17	Shield-plug-coring system (horizontal)	Emplacement panel	1	ND
42 U WTR-18	Horizontal borehole inspection system	Emplacement panel	1	ND
42 U WTR-19	Dolly-uncoupling system	Emplacement panel	1	ND
42 U WTR-20	Liner repair system	Emplacement panel	1	ND
42 U WTR-21	Borehole-reaming system	Emplacement panel	1	ND
42 U WTR-22	Waste-container-coring system	Emplacement panel	1	ND
42 U WTR-23	Auxiliary-borehole-drilling system	Emplacement panel	1	ND
42 U WTR-24	Liner-cutting system (horizontal)	Emplacement panel	1	ND

a. Includes spares.
b. ND = needs development.

3.2.2.2.4 Transport and Delivery of Waste Containers to the Surface Facility Under Off-Normal Conditions

Concepts have been developed for

- surmounting equipment malfunction and
- mitigating the effect of a transporter collision.

These concepts are explained in Appendix J.

3.3 Underground Development

Underground development includes mining, installation of ground support, excavation of emplacement boreholes, installation of utilities, and construction of support facilities such as shops, warehouses, and offices. The major elements of the underground facility are similar in the vertical and horizontal emplacement configurations. These elements are shown in Figures 3-20 and 4-34 and are listed in Table 3-11.

3.3.1 Access and Drift Development

In the vertical and horizontal emplacement configurations, the methods and operations used for development are the same but differ in magnitude. For example, the tonnage of excavated tuff in the horizontal emplacement configuration is 37% of the total tonnage in the vertical case.

3.3.1.1 Mining Methods

The mining methods to be used for repository construction have been selected based on appropriateness; e.g., the use of tunnel-boring machines (TBM) is proposed for accesses that have long straight runs and can be circular in cross section; drill-and-blast mining is the method selected for the drifts that have short runs and cannot, because of functional considerations, be circular in cross section.

As reported in Section 7.3.2.1.3, studies have shown that the extent of the damage in the intact rock that results from drill-and-blast mining will not exceed 2 m if reasonable blast control methods are used. Thus, the extent of damage to intact rock does not restrict selection of the mining method.

3.3.1.1.1 Shaft Excavation

ES-1, the men-and-materials shaft, and the emplacement area exhaust shaft will be constructed using conventional drilling and blasting techniques. ES-2 may be constructed by conventional techniques or by raise boring. Descriptions and general arrangement drawings of all shafts are included in Section 4.3. The option of raise boring the men-and-materials shaft and the emplacement area exhaust shaft will be evaluated during ACD studies. Raise boring these shafts would require early development of drifts to the bottom of each shaft.

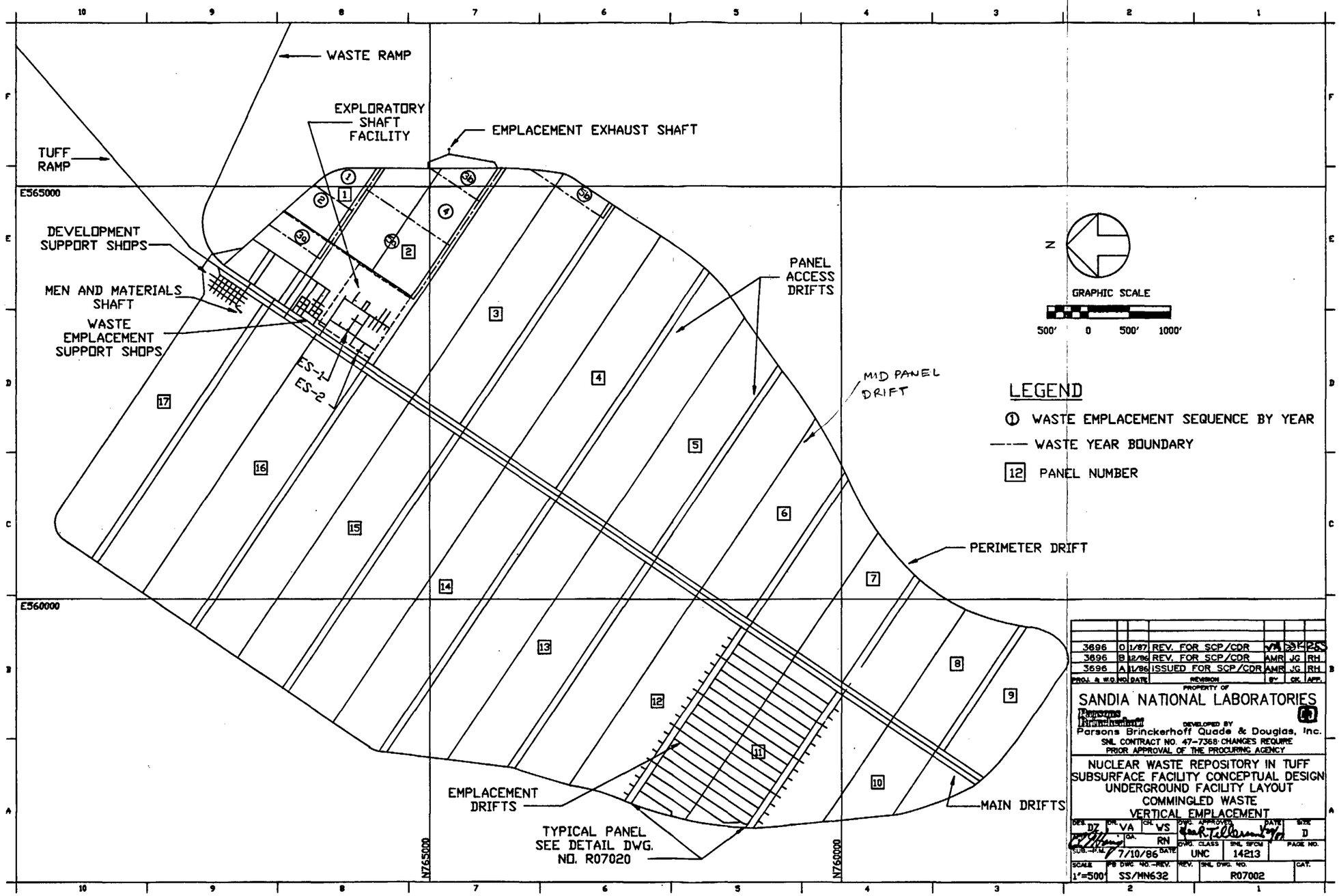
WASTE RAMP
EXPLORATORY SHAFT FACILITY
EMPLACEMENT EXHAUST SHAFT
TUFF RAMP
E565000
DEVELOPMENT SUPPORT SHOPS
MEN AND MATERIALS SHAFT
WASTE EMPLACEMENT SUPPORT SHOPS
ES-1
ES-2
PANEL ACCESS DRIFTS
MID PANEL DRIFT
PERIMETER DRIFT
E560000
EMPLACEMENT DRIFTS
TYPICAL PANEL SEE DETAIL DWG. NO. R07020
MAIN DRIFTS
N765000
N760000
N
GRAPHIC SCALE
500' 0 500' 1000'
LEGEND
① WASTE EMPLACEMENT SEQUENCE BY YEAR
WASTE YEAR BOUNDARY
12 PANEL NUMBER
3696 O 1/87 REV. FOR SCP/CDR
3696 B 12/86 REV. FOR SCP/CDR AMR JG RH
3696 A 11/86 ISSUED FOR SCP/CDR AMR JG RH
PROPERTY OF
SANDIA NATIONAL LABORATORIES
DEVELOPED BY
Parsons Brinckerhoff Quade & Douglas, Inc.
SNL CONTRACT NO. 47-7368 CHANGES REQUIRE PRIOR APPROVAL OF THE PROCURING AGENCY
NUCLEAR WASTE REPOSITORY IN TUFF
SUBSURFACE FACILITY CONCEPTUAL DESIGN
UNDERGROUND FACILITY LAYOUT
COMMINGLED WASTE
VERTICAL EMPLACEMENT
DES. DZ DR. VA CH. WS
CA. RN
SUB.-P.M. 7/10/86
DWG. CLASS UNC
SNL SPCN 14213
SIZE D
PAGE NO.
SCALE 1"=500'
PB DWG. NO.-REV. SS/MN632
REV.
SNL DWG. NO. R07002
CAT.

Figure 3-20.

TABLE 3-11

MAJOR ELEMENTS OF THE UNDERGROUND FACILITIES

Element	Functions
Shafts and Ramps	
Waste Ramp	• Provides sole access for the waste transporter. • Serves as the ventilation intake for the waste emplacement areas.
Tuff Ramp	• Serves as the primary haulageway for excavated tuff. • Serves as the primary exhaust airway for the development area.
Men-and-Materials Shaft	• Provides transportation for personnel and materials. • Serves as the main utilities route. • Serves as the ventilation intake for the development area.
Emplacement Area Exhaust Shaft	• Carries exhaust air from the waste emplacement area.
Exploratory Shaft 1 (ES-1)	• Serves as the primary intake of ventilation air for the waste emplacement area.
Exploratory Shaft 2 (ES-2)	• Serves as the secondary intake of ventilation air for the waste emplacement area.
Access Mains	
Waste Main	• Connects waste ramp with access drifts. • Serves as sole access to the panels for the waste transporter. • Serves as ventilation intake for the waste emplacement area.
Tuff Main	• Serves as the main haulageway for excavated tuff. • Carries exhaust air from the development area.
Service Main	• Provides access from the men-and-materials shaft to the development area for personnel, supplies, and machinery. • Carries ventilation air to the development area.

TABLE 3-11

MAJOR ELEMENTS OF THE UNDERGROUND FACILITIES
(concluded)

Element	Functions
Drifts	
Panel Access Drifts	• Provide access to the emplacement drifts.
Emplacement Drifts	• Contain emplacement boreholes.
Perimeter Drift	• Serves as an exhaust airway from the waste emplacement area to the waste emplacement area exhaust shaft.
Midpanel Drift	• A drift constructed to divide a vertical emplacement panel into 700-ft segments. The drift is required for ventilation control.
Other Facilities	
Shops	
Development Area	• Supports development operations.
Waste Emplacement Area	• Supports waste emplacement operations.
Training Area	• Provides space in the waste emplacement area for training personnel who perform emplacement and retrieval operations.
Performance Confirmation Area	• Consists of one or more areas that are highly instrumented and monitored to collect data for the performance confirmation program.
Exploratory Shaft Facility	• Is an area designated for obtaining data on site characteristics, mining, opening stability, and other information important to the design and to predicting repository performance.

3.3.1.1.2 Conventional Shaft Excavation

In the conventional construction method, a sequence of drilling and controlled blasting, followed by removal of the broken tuff, installation of ground support, and lining of the opening, is repeated as the depth of

the shaft is extended. After completion of the permanent shaft collar and the foundations for a temporary hoist house and headframe, the shaft is sunk using the drill-and-blast sequence. Excavated tuff is removed from the bottom of the shaft in a special sinking bucket. The bucket is hoisted to the surface, and the tuff is transferred by truck to a temporary storage pile.

As the shaft is excavated, a temporary ground support system is installed, which, depending on ground conditions, may include rock bolts, wire mesh, and shotcrete. With the use of special, reusable forms, a permanent concrete lining is placed a short distance (approximately 40 ft) above the advancing bottom. After the shaft has been completely lined, permanent shaft fixtures to support repository operations are installed.

3.3.1.1.3 Raise Boring

Where applicable, raise boring is preferred to drilling and blasting. In some applications, raise boring is safer, faster, and less expensive than developing shafts conventionally. Raise boring restricts the size and depth of shaft that can be developed and cannot be used where significant quantities of water are present. Multiple passes of a raise-boring bit or a combination of raise boring and conventional methods may be required for large-diameter shafts.

The raise-boring technique necessitates construction of an access to the base of the shaft to be bored. A pilot hole up to 8 in. in diameter is drilled from the surface to the base of the shaft, and a drift is driven to intersect the bottom of the pilot hole. A raise-boring bit is brought, piece by piece, through the drift to the bottom of the pilot hole and assembled. While the raise-boring bit is being assembled, a raise-boring machine is installed on the surface and heavy-duty drill steel is lowered through the pilot hole. The drill steel and bit are joined, and raise boring is begun by rotating the bit and pulling it up. The cuttings from the boring operation fall to the bottom of the hole and are removed. When the bit reaches the surface, the shaft is lined, usually with steel or concrete, and is ready for use.

3.3.1.1.4 Tunnel-Boring Machines

It is currently expected that the waste and tuff ramps, waste main, and perimeter drifts will be excavated using TBMs, which is the fastest and most cost-effective mining method for long ramps and drifts. These ramps and drifts are within the size range for efficient use of TBMs. Table 3-12 shows which drifts will be developed by TBM.

A typical cycle for the TBM is illustrated in Figure 3-21. The drift is advanced by alternately boring with the cutterhead (usually a distance of about 4 ft) and advancing gripper pads, which provide anchorage by pressing against the drift walls. This anchorage allows the cutterhead to be thrust ahead to advance through the rock. The TBM cycle may be interrupted periodically during normal operation for preventive maintenance, for changing the cutters, or for advancing the tuff-handling system. Installation of ground support and tuff-handling operations occur concurrently with the boring operation.

TABLE 3-12

MINING METHODS FOR DRIFTS AND RAMPS

Opening	Mining Method
Waste Ramp	TBM
Tuff Ramp	TBM
Waste Main	TBM
Tuff Main	Conventional
Service Main	Conventional
Perimeter Drift	TBM
Emplacement Drifts	Conventional
Panel Drifts	Conventional
Midpanel Drifts	Conventional

3.3.1.1.5 Conventional Drift Excavation

Drill-and-blast techniques used to develop the emplacement area in the vertical and horizontal emplacement configurations are much the same as those used in a modified room-and-pillar mining operation (Figure 3-22 and Figure 3-27). The drift is excavated by drilling, controlled blasting, and removing the material in increments of about 10 linear feet per blast, a design assumption based on experience in welded tuff at G-Tunnel. A typical cycle to excavate approximately 10 linear feet of tunnel, illustrated in Figure 3-23, includes the following operations:

- drilling 11-ft-deep blast and perimeter holes measuring 1.625 to 1.75 in. in diameter;
- charging or loading explosives and detonators into the blast holes (perimeter holes are more closely spaced and contain less explosive to reduce overbreak and fracturing of the rock outside of the excavated perimeter);
- blasting the round (usually at the lunch break or the end of a shift);
- scaling loose rock (by miners using pry bars or by using a mechanical scaler) before loading and hauling, as required for safety;
- loading and hauling blasted rock by load/haul/dump (LHD) units to the feeder/breaker and conveyor area; and
- installing roof bolting for ground support.

These steps require two to three shifts to complete, depending on the size of the opening and the number of active headings. Several (four to six) drifts or headings per mining crew are needed to use manpower and equipment most efficiently.

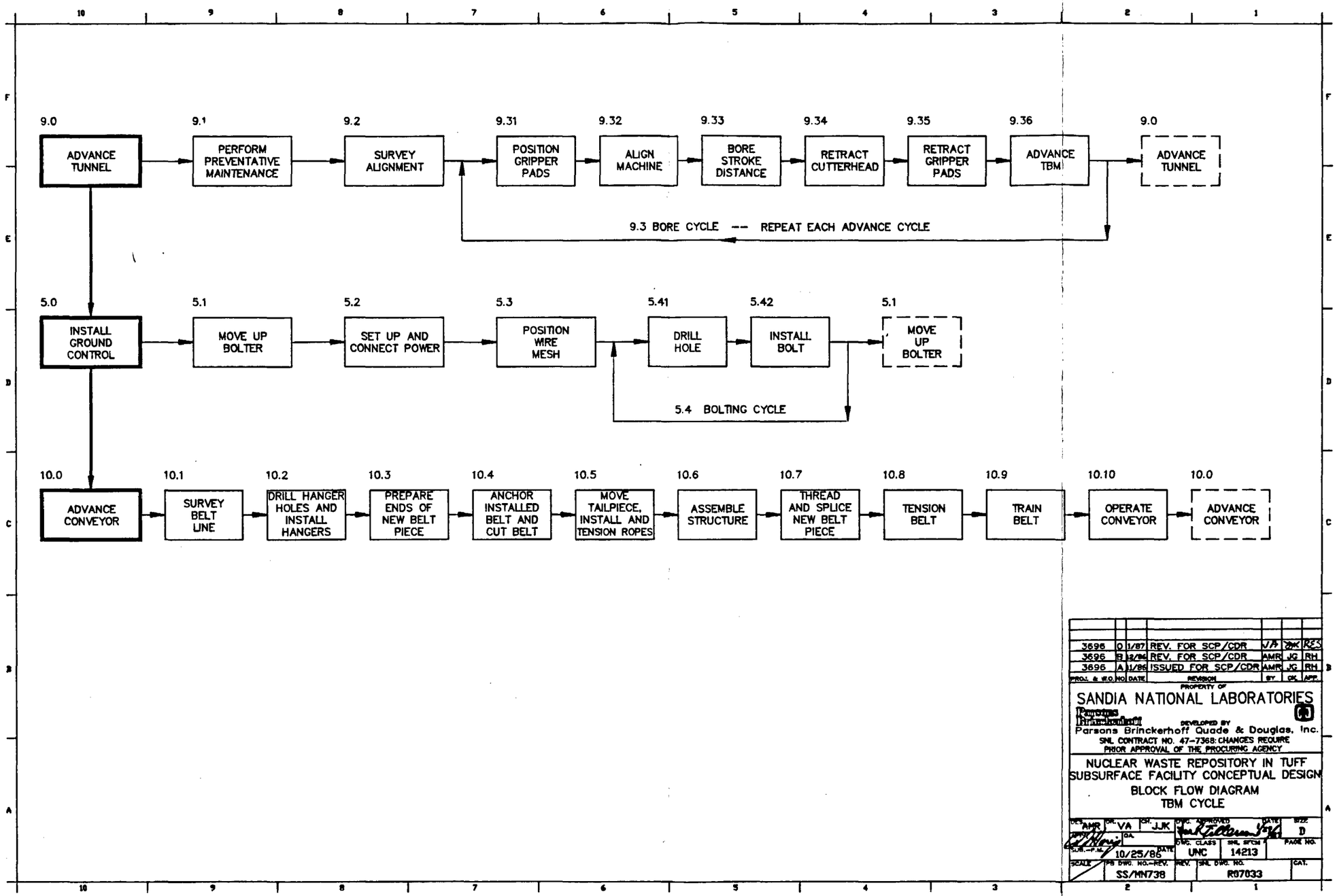
9.0
ADVANCE TUNNEL
9.1
PERFORM PREVENTATIVE MAINTENANCE
9.2
SURVEY ALIGNMENT
9.31
POSITION GRIPPER PADS
9.32
ALIGN MACHINE
9.33
BORE STROKE DISTANCE
9.34
RETRACT CUTTERHEAD
9.35
RETRACT GRIPPER PADS
9.36
ADVANCE TBM
9.0
ADVANCE TUNNEL
9.3 BORE CYCLE -- REPEAT EACH ADVANCE CYCLE
5.0
INSTALL GROUND CONTROL
5.1
MOVE UP BOLTER
5.2
SET UP AND CONNECT POWER
5.3
POSITION WIRE MESH
5.41
DRILL HOLE
5.42
INSTALL BOLT
5.1
MOVE UP BOLTER
5.4 BOLTING CYCLE
10.0
ADVANCE CONVEYOR
10.1
SURVEY BELT LINE
10.2
DRILL HANGER HOLES AND INSTALL HANGERS
10.3
PREPARE ENDS OF NEW BELT PIECE
10.4
ANCHOR INSTALLED BELT AND CUT BELT
10.5
MOVE TAILPIECE, INSTALL AND TENSION ROPES
10.6
ASSEMBLE STRUCTURE
10.7
THREAD AND SPLICE NEW BELT PIECE
10.8
TENSION BELT
10.9
TRAIN BELT
10.10
OPERATE CONVEYOR
10.0
ADVANCE CONVEYOR
3696 0 1/87 REV. FOR SCP/CDR VA JJK RES
3696 B 12/86 REV. FOR SCP/CDR AMR JG RH
3696 A 11/86 ISSUED FOR SCP/CDR AMR JG RH
PROJ. & W.O. NO DATE REVISION BY CK. APP.
PROPERTY OF
SANDIA NATIONAL LABORATORIES
Parsons Brinckerhoff
DEVELOPED BY
Parsons Brinckerhoff Quade & Douglas, Inc.
SNL CONTRACT NO. 47-7368: CHANGES REQUIRE PRIOR APPROVAL OF THE PROCURING AGENCY
NUCLEAR WASTE REPOSITORY IN TUFF
SUBSURFACE FACILITY CONCEPTUAL DESIGN
BLOCK FLOW DIAGRAM
TBM CYCLE
DES. AMR
DR. VA
CH. JJK
DWG. APPROVED
DATE
SIZE D
APPR.
GA.
SUB.-P.M.
DATE 10/25/86
DWG. CLASS UNC
SNL SPCN 14213
PAGE NO.
SCALE
PB DWG. NO.-REV. SS/MN738
REV.
SNL DWG. NO. R07033
CAT.

Figure 3-21.

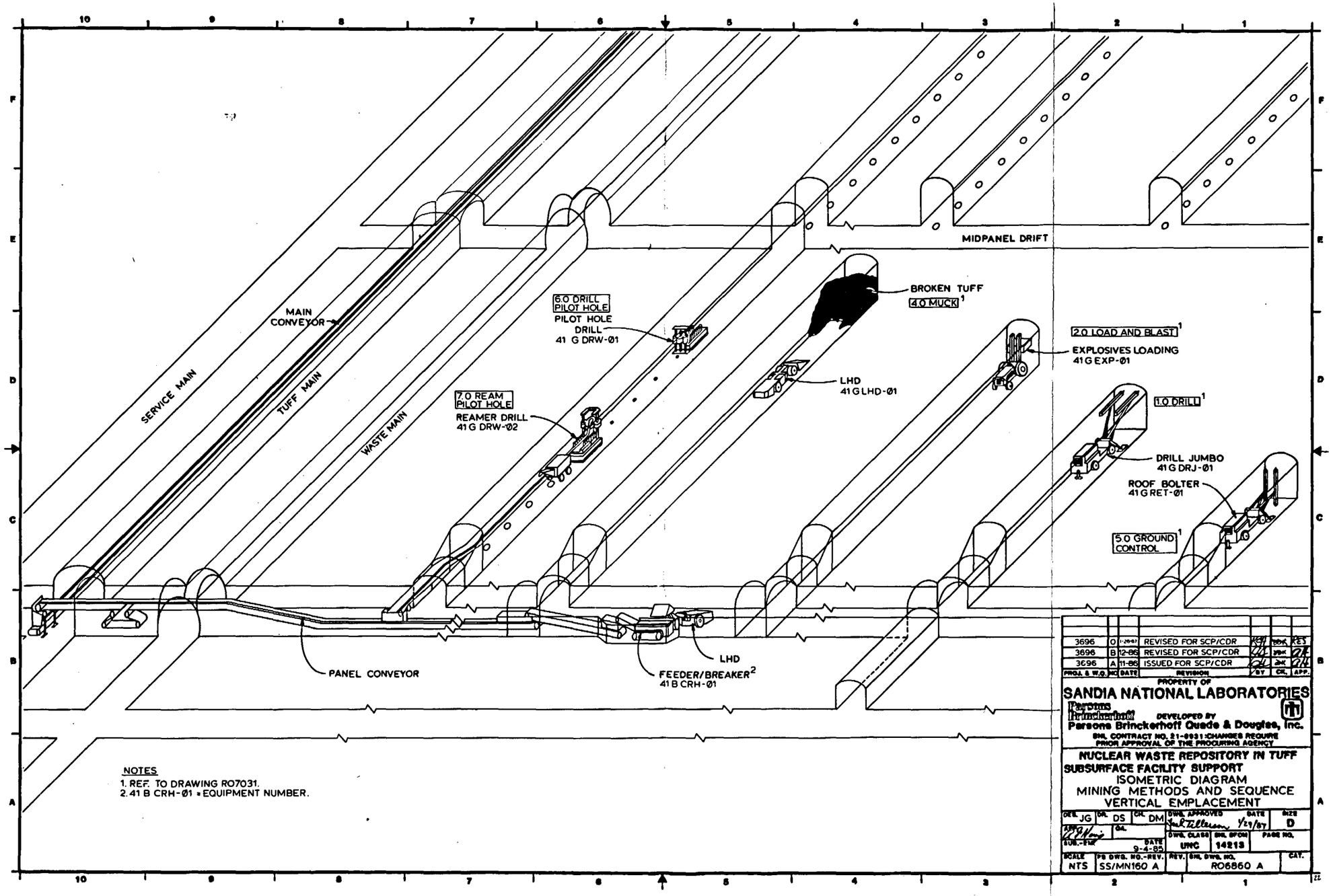
MIDPANEL DRIFT
MAIN CONVEYOR
SERVICE MAIN
TUFF MAIN
WASTE MAIN
6.0 DRILL PILOT HOLE
PILOT HOLE DRILL 41 G DRW-Ø1
7.0 REAM PILOT HOLE
REAMER DRILL 41 G DRW-Ø2
BROKEN TUFF
4.0 MUCK 1
LHD 41 G LHD-Ø1
2.0 LOAD AND BLAST 1
EXPLOSIVES LOADING 41 G EXP-Ø1
1.0 DRILL 1
DRILL JUMBO 41 G DRJ-Ø1
ROOF BOLTER 41 G RET-Ø1
5.0 GROUND CONTROL 1
PANEL CONVEYOR
LHD
FEEDER/BREAKER 2 41 B CRH-Ø1
NOTES
1. REF. TO DRAWING RO7031.
2. 41 B CRH-Ø1 = EQUIPMENT NUMBER.
3696 O 1-20-87 REVISED FOR SCP/CDR
3696 B 12-86 REVISED FOR SCP/CDR
3696 A 11-86 ISSUED FOR SCP/CDR
PROJ. & W.O. NO. DATE REVISION BY CK. APP.
PROPERTY OF
SANDIA NATIONAL LABORATORIES
Parsons Brinckerhoff
DEVELOPED BY
Parsons Brinckerhoff Quade & Douglas, Inc.
SNL CONTRACT NO. 21-0031: CHANGES REQUIRE PRIOR APPROVAL OF THE PROCURING AGENCY
NUCLEAR WASTE REPOSITORY IN TUFF
SUBSURFACE FACILITY SUPPORT
ISOMETRIC DIAGRAM
MINING METHODS AND SEQUENCE
VERTICAL EMPLACEMENT
DES. JG DR. DS CK. DM
DWG. APPROVED 1/21/87
SIZE D
SUB.-FM 9-4-85
DWG. CLASS UNC
SNL SPCN 14213
PAGE NO.
SCALE NTS
PB DWG. NO.-REV. SS/MN160 A
REV.
SNL DWG. NO. RO6860 A
CAT.

Figure 3-22.

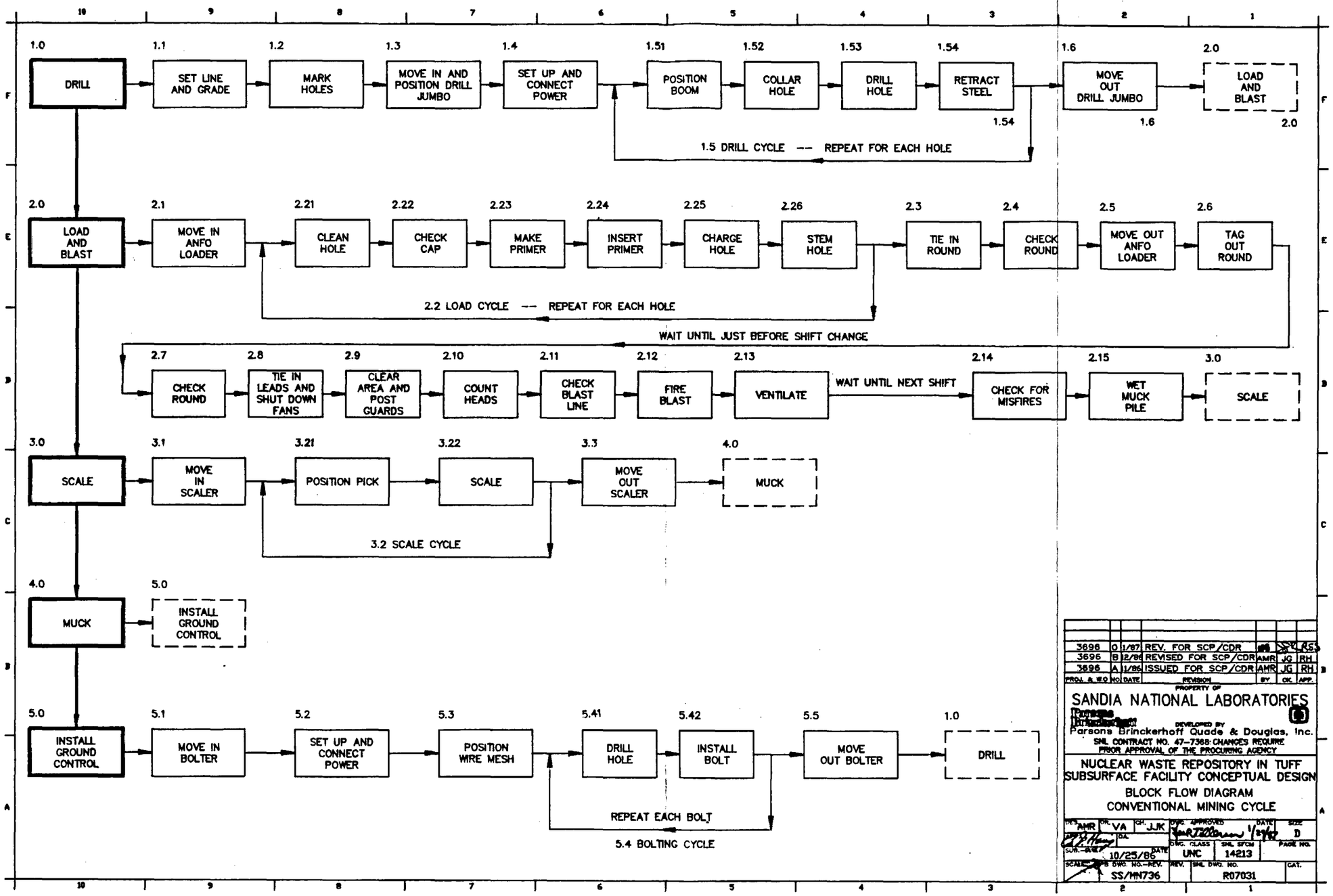
1.0 DRILL
1.1 SET LINE AND GRADE
1.2 MARK HOLES
1.3 MOVE IN AND POSITION DRILL JUMBO
1.4 SET UP AND CONNECT POWER
1.51 POSITION BOOM
1.52 COLLAR HOLE
1.53 DRILL HOLE
1.54 RETRACT STEEL
1.6 MOVE OUT DRILL JUMBO
2.0 LOAD AND BLAST
1.54
1.6
2.0
1.5 DRILL CYCLE -- REPEAT FOR EACH HOLE
2.0 LOAD AND BLAST
2.1 MOVE IN ANFO LOADER
2.21 CLEAN HOLE
2.22 CHECK CAP
2.23 MAKE PRIMER
2.24 INSERT PRIMER
2.25 CHARGE HOLE
2.26 STEM HOLE
2.3 TIE IN ROUND
2.4 CHECK ROUND
2.5 MOVE OUT ANFO LOADER
2.6 TAG OUT ROUND
2.2 LOAD CYCLE -- REPEAT FOR EACH HOLE
WAIT UNTIL JUST BEFORE SHIFT CHANGE
2.7 CHECK ROUND
2.8 TIE IN LEADS AND SHUT DOWN FANS
2.9 CLEAR AREA AND POST GUARDS
2.10 COUNT HEADS
2.11 CHECK BLAST LINE
2.12 FIRE BLAST
2.13 VENTILATE
WAIT UNTIL NEXT SHIFT
2.14 CHECK FOR MISFIRES
2.15 WET MUCK PILE
3.0 SCALE
3.0 SCALE
3.1 MOVE IN SCALER
3.21 POSITION PICK
3.22 SCALE
3.3 MOVE OUT SCALER
4.0 MUCK
3.2 SCALE CYCLE
4.0 MUCK
5.0 INSTALL GROUND CONTROL
5.0 INSTALL GROUND CONTROL
5.1 MOVE IN BOLTER
5.2 SET UP AND CONNECT POWER
5.3 POSITION WIRE MESH
5.41 DRILL HOLE
5.42 INSTALL BOLT
5.5 MOVE OUT BOLTER
1.0 DRILL
REPEAT EACH BOLT
5.4 BOLTING CYCLE
3696 0 1/87 REV. FOR SCP/CDR
3696 B 12/86 REVISED FOR SCP/CDR AMR JG RH
3696 A 11/86 ISSUED FOR SCP/CDR AMR JG RH
PROJ. & W.O. NO. DATE REVISION BY CK. APP.
PROPERTY OF
SANDIA NATIONAL LABORATORIES
DEVELOPED BY
Parsons Brinckerhoff Quade & Douglas, Inc.
SNL CONTRACT NO. 47-7368: CHANGES REQUIRE PRIOR APPROVAL OF THE PROCURING AGENCY
NUCLEAR WASTE REPOSITORY IN TUFF
SUBSURFACE FACILITY CONCEPTUAL DESIGN
BLOCK FLOW DIAGRAM
CONVENTIONAL MINING CYCLE
DES. AMR DR. VA CH. JJK DWG. APPROVED DATE SIZE D
10/25/86
DWG. CLASS UNC SNL SPCM 14213 PAGE NO.
SCALE PB DWG. NO.-REV. SS/MN736 REV. SNL DWG. NO. R07031 CAT.

Figure 3-23.

3.3.1.2 Handling of Excavated Tuff

In the current conceptual design, excavated tuff is transported from the working face to a feeder/breaker by 8-yd^3-capacity LHD units. The feeder/breaker crushes the tuff and loads it on the conveyor belt for transportation to the surface. Space in the drifts is used for surge storage. Conveyors (Figure 3-24) are installed to haul tuff from the panel access drifts and the advancing mains through the tuff main and up the tuff ramp to the surface. At the portal of the tuff ramp, the excavated tuff is transferred to a conveyor belt on the surface for transport to the tuff pile.

The LHD hauls excavated tuff over distances from 200 to 1,000 ft. Extension of the belt in the panel access drift and relocation of the feeder/breaker continue until the entire panel has been developed (Figure 3-24). A feeder/breaker and drift conveyor are installed in the next developing panel, and the cycle begins again.

3.3.1.3 Ground Support Methods

The ground support requirement for each segment of drift may vary over relatively short distances, depending on the local geologic conditions. This section summarizes the ground support system proposed for all drifts and ramps at Yucca Mountain. Sections 2.4 and 2.6 list the design requirements for opening stability as prescribed by 10 CFR 60 (NRC, 1986). A description of the analytical design methods used is presented in Section 7.1.3.

3.3.1.3.1 Ground Support Options

Numerous ground support systems currently used in mining and civil tunneling projects are well suited for use in a repository. Tunneling experience applicable to welded tuff includes work conducted in the G-Tunnel complex at the Nevada Test Site (NTS) and in the Rivers Mountain Tunnel in Nevada (Sperry, 1969). The range of expected conditions is well within the limits of historical experience. The following ground support options are some of those available for use at the repository:

- no support;
- friction bolts (Swellex, split set);
- chain-link fence materials;
- welded wire mesh;
- point-anchor bolts;
- cement-grouted dowels (pre-, post-, and untensioned);
- cement-grouted cable anchors;
- shotcrete with
  - steel fiber,
  - microsilica, and
  - accelerators;
- structural steel sets;
- yieldable steel arches;
- prefabricated, segmented linings;
- cast-in-place concrete lining;
- resin-grouted dowels; and
- lattice girders.

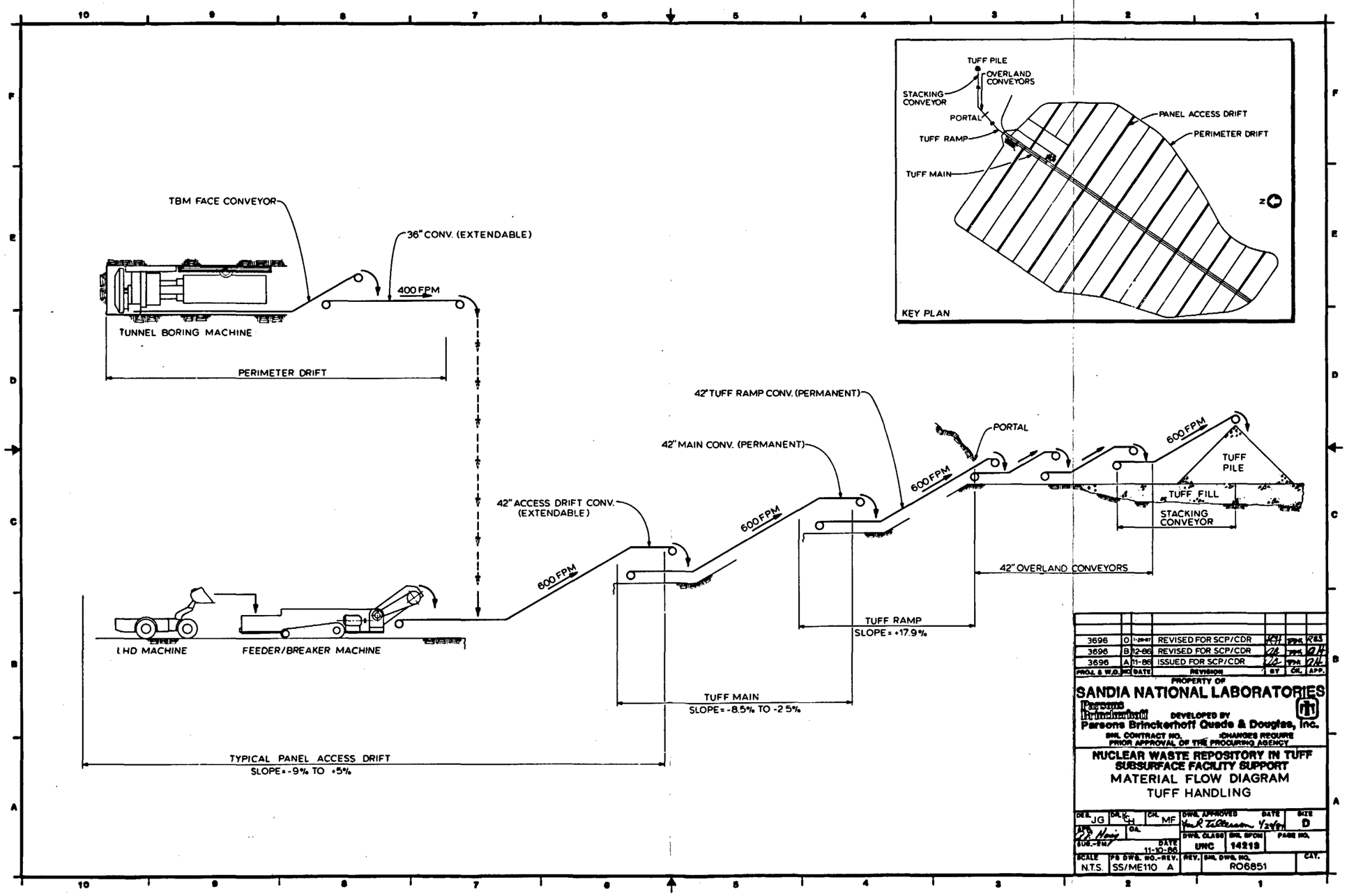
TBM FACE CONVEYOR
36" CONV. (EXTENDABLE)
400 FPM
TUNNEL BORING MACHINE
PERIMETER DRIFT
42" TUFF RAMP CONV. (PERMANENT)
42" MAIN CONV. (PERMANENT)
PORTAL
600 FPM
TUFF PILE
TUFF FILL
STACKING CONVEYOR
42" ACCESS DRIFT CONV. (EXTENDABLE)
42" OVERLAND CONVEYORS
LHD MACHINE
FEEDER/BREAKER MACHINE
TUFF RAMP
SLOPE = +17.9%
TUFF MAIN
SLOPE = -8.5% TO -2.5%
TYPICAL PANEL ACCESS DRIFT
SLOPE = -9% TO +5%
TUFF PILE
OVERLAND CONVEYORS
STACKING CONVEYOR
PORTAL
TUFF RAMP
TUFF MAIN
PANEL ACCESS DRIFT
PERIMETER DRIFT
KEY PLAN
3696 0 11-20-87 REVISED FOR SCP/CDR
3696 B 12-86 REVISED FOR SCP/CDR
3696 A 11-86 ISSUED FOR SCP/CDR
PROJ. & W.O. NO. DATE REVISION BY CK. APP.
PROPERTY OF
SANDIA NATIONAL LABORATORIES
Parsons Brinckerhoff
DEVELOPED BY
Parsons Brinckerhoff Quade & Douglas, Inc.
SNL CONTRACT NO. CHANGES REQUIRE PRIOR APPROVAL OF THE PROCURING AGENCY
NUCLEAR WASTE REPOSITORY IN TUFF
SUBSURFACE FACILITY SUPPORT
MATERIAL FLOW DIAGRAM
TUFF HANDLING
DES. JG
DR. JC CH
CK. MF
DWG. APPROVED
DATE 1/29/87
SIZE D
APP. G.A.
SUB.-SM
DATE 11-10-86
DWG. CLASS UNC
SNL SPCM 14219
PAGE NO.
SCALE N.T.S.
PB DWG. NO.-REV. SS/ME110 A
REV.
SNL DWG. NO. R06851
CAT.

Figure 3-24.

Ground support systems should include the following features:

- compatibility with excavation methods and sequence of construction,
- relative flexibility to conform with thermally and seismically induced deformations,
- minimal site-specific prefabrication,
- installation methods or upgrading as needed to deal with anomalous conditions,
- installation to minimize work in unsupported openings,
- adaptability to accommodate varying shapes of openings and intersections,
- durability to withstand elevated temperatures and the possible presence of water for 100 yr,
- cost effectiveness for the support obtained, and
- chemical components that are compatible with waste isolation and containment strategies.

3.3.1.3.2 Ground Support Recommendations

The methods used for design of the underground openings are described in Section 7.1.3. These methods include both analytical and empirical approaches, which are supported by historical experience with underground construction. These analyses include consideration of in situ stress, stress induced by excavation and thermal loading, and response to seismic events.

For the purposes of the conceptual design, a rock-mass classification system has been proposed in which five ground support categories are defined for Yucca Mountain. The five assumed categories encompass the full range of conditions reported by Langkopf and Gnirk (1986), Dravo (1984), and Johnstone et al. (1984) in studies involving empirical rock-mass classifications of the Yucca Mountain tuffs.

Table 3-13 describes the five ground support categories, Ground Classes A through E, in general geologic terms and presents a summary of the proposed ground support measures for each category. Figure 3-25 shows a typical section of the ground support systems for rock categories A through D for both bored and conventionally mined drifts. Observations and measurements made during excavation will ascertain the required ground support at any given location in accordance with predetermined standards.

3.3.1.3.3 Ground Support Installation

Ground support systems must be versatile so as to accommodate various rock categories, including the worst conditions likely to be encountered.

TABLE 3-13

GROUND SUPPORT RECOMMENDATIONS

Ground Class NGI* Relative Description	A Very Good	B Good	C Fair	D Poor	E Very Poor
General Ground Condition Relative to Yucca Mountain	Massive, welded tuff; little or no jointing; dry or slightly damp.	Densely welded tuff with one to three joint sets; joints are tight with no alteration.	Densely welded tuff with multiple or random joint sets; little or no joint alteration.	Heavily jointed, welded tuff; typical of conditions at transition within flow units.	Fault zone; crushed tuff in a matrix of low-strength gouge; heavy alteration and possibly minor water.
Ground Support System Recommended for Conceptual Design	Untensioned, friction-type bolts on variable spacing, as needed; typical grid spacing of 6.5 to 10 ft.	Untensioned grouted dowels on a 5- to 6.5-ft grid spacing with wire mesh or chain-link fabric on ribs and crown.	Untensioned grouted dowels on a 5- to 6.5-ft spacing with welded wire mesh and 2 to 3 in. of shotcrete.	Initial support: friction bolts on a 5-ft spacing with 2- to 3-in. fiber-reinforced shotcrete; final support: welded wire mesh, grouted dowels with 3 in. of additional shotcrete.	Light steel ribs or lattice girders placed near face; fiber-reinforced shotcrete 3 to 4 in., followed by welded wire mesh, grouted dowels, and 2 in. of shotcrete.

*Norwegian Geotechnical Institute (Barton et al., 1974).

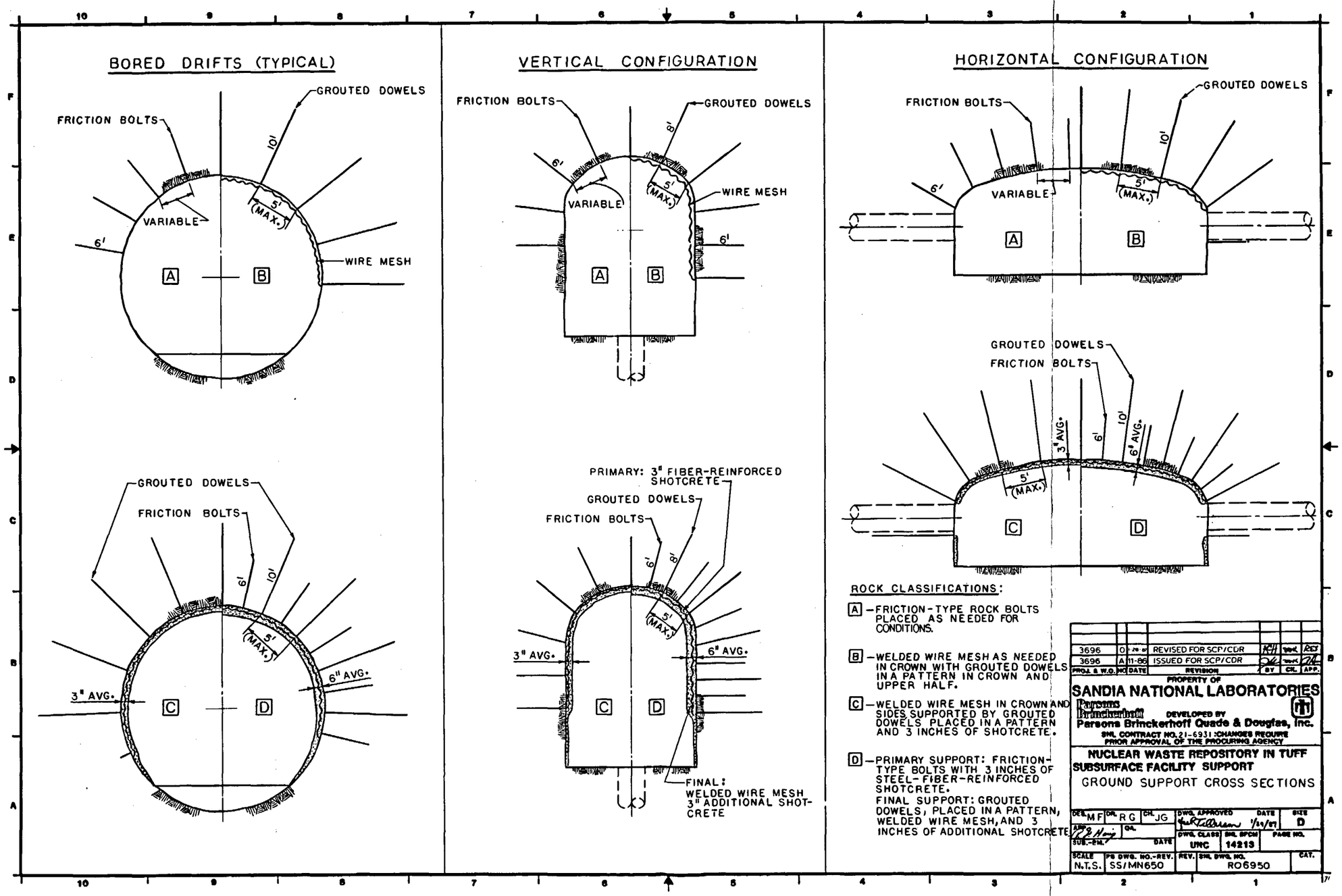
BORED DRIFTS (TYPICAL)
GROUTED DOWELS
FRICTION BOLTS
10'
5' (MAX.)
VARIABLE
6'
WIRE MESH
A
B
GROUTED DOWELS
FRICTION BOLTS
6'
10'
5' (MAX.)
3" AVG.
6" AVG.
C
D
VERTICAL CONFIGURATION
FRICTION BOLTS
GROUTED DOWELS
6'
8'
5' (MAX.)
VARIABLE
WIRE MESH
6'
A
B
PRIMARY: 3" FIBER-REINFORCED SHOTCRETE
GROUTED DOWELS
FRICTION BOLTS
6'
8'
5' (MAX.)
3" AVG.
6" AVG.
C
D
FINAL: WELDED WIRE MESH 3" ADDITIONAL SHOTCRETE
HORIZONTAL CONFIGURATION
FRICTION BOLTS
GROUTED DOWELS
10'
6'
VARIABLE
5' (MAX.)
A
B
GROUTED DOWELS
FRICTION BOLTS
3" AVG.
6'
10'
6" AVG.
5' (MAX.)
C
D
ROCK CLASSIFICATIONS:
A - FRICTION-TYPE ROCK BOLTS PLACED AS NEEDED FOR CONDITIONS.
B - WELDED WIRE MESH AS NEEDED IN CROWN WITH GROUTED DOWELS IN A PATTERN IN CROWN AND UPPER HALF.
C - WELDED WIRE MESH IN CROWN AND SIDES SUPPORTED BY GROUTED DOWELS PLACED IN A PATTERN AND 3 INCHES OF SHOTCRETE.
D - PRIMARY SUPPORT: FRICTION-TYPE BOLTS WITH 3 INCHES OF STEEL-FIBER-REINFORCED SHOTCRETE.
FINAL SUPPORT: GROUTED DOWELS, PLACED IN A PATTERN, WELDED WIRE MESH, AND 3 INCHES OF ADDITIONAL SHOTCRETE
3696 0 REVISED FOR SCP/CDR
3696 A 11-86 ISSUED FOR SCP/CDR
PROJ. & W.O. NO. DATE REVISION BY CK. APP.
PROPERTY OF
SANDIA NATIONAL LABORATORIES
Parsons Brinckerhoff
DEVELOPED BY
Parsons Brinckerhoff Quade & Douglas, Inc.
SNL CONTRACT NO. 21-6931: CHANGES REQUIRE PRIOR APPROVAL OF THE PROCURING AGENCY
NUCLEAR WASTE REPOSITORY IN TUFF
SUBSURFACE FACILITY SUPPORT
GROUND SUPPORT CROSS SECTIONS
DES. MF DR. RG CK. JG
DWG. APPROVED DATE 1/24/87
SIZE D
DWG. CLASS UNC
SNL SPCN 14213
PAGE NO.
SCALE N.T.S.
PB DWG. NO.-REV. SS/MN650
REV.
SNL DWG. NO. R06950
CAT.

Figure 3-25.

Most of the underground area is expected to be classified in Ground Classes A through D. These categories can be handled on a routine basis using standard equipment and methods without significantly affecting the rates of advance. Ground Class E is expected only infrequently and will, therefore, have only a slight effect on the rate of underground development.

The type of ground support installed in each segment of drift will be constantly monitored by mining engineers and mine inspectors. Ground support specifications will be set according to predetermined requirements that are based on previous experience in the repository and exploratory shaft facility (ESF).

Installation of the ground support will be accomplished as part of the mining cycle described in Section 3.3.1.1. This material will be installed very quickly after the ground has been opened up and before the next segment of drift is drilled and blasted so that the miners do not have to work under unsupported ground.

3.3.1.4 Excavation and Construction Sequence

The construction and operation of the repository take place in four phases: (1) construction, (2) operations, (3) caretaker, and (4) closure and decommissioning. The excavation and construction sequences for the first three phases are discussed here, and the last phase is discussed in Chapter 5.

3.3.1.4.1 Construction Phase

Activities during the construction phase include the construction of the ramps and shafts, excavation and construction of the common facilities in the shaft area, and initial development of the waste emplacement area. These facilities are described further in Sections 4.3 and 4.4.

The sequence of mining operations typical to both the vertical and horizontal emplacement configuration is illustrated in Figure 3-26. Excavation of the tuff and waste ramps commences after preparation of the surface site and construction of the portal. It is currently expected that two TBMs will be used so that the ramps can be constructed more or less simultaneously. When the TBM that has been driving the tuff ramp reaches the emplacement level, it will be modified and used to drive the perimeter drift toward the emplacement area exhaust shaft. Similarly, the TBM used to excavate the waste ramp will be used to excavate the waste main. It will take about 10 mo to complete the tuff ramp and an additional 4 mo to install the conveyor.

As with the ramps, excavation of the men-and-materials and emplacement area exhaust shafts follows site preparation and construction of the shaft collars, headframes, and hoisting equipment. The shafts are started at about the same time as the ramps, but construction time is longer. Approximately 22 mo is required to excavate and construct the men-and-materials shaft (including the collar, headframe, and hoist) and to install permanent equipment in the shaft. Construction of the emplacement area exhaust shaft requires only 19 mo because this shaft is shorter and does not require as much permanent equipment.

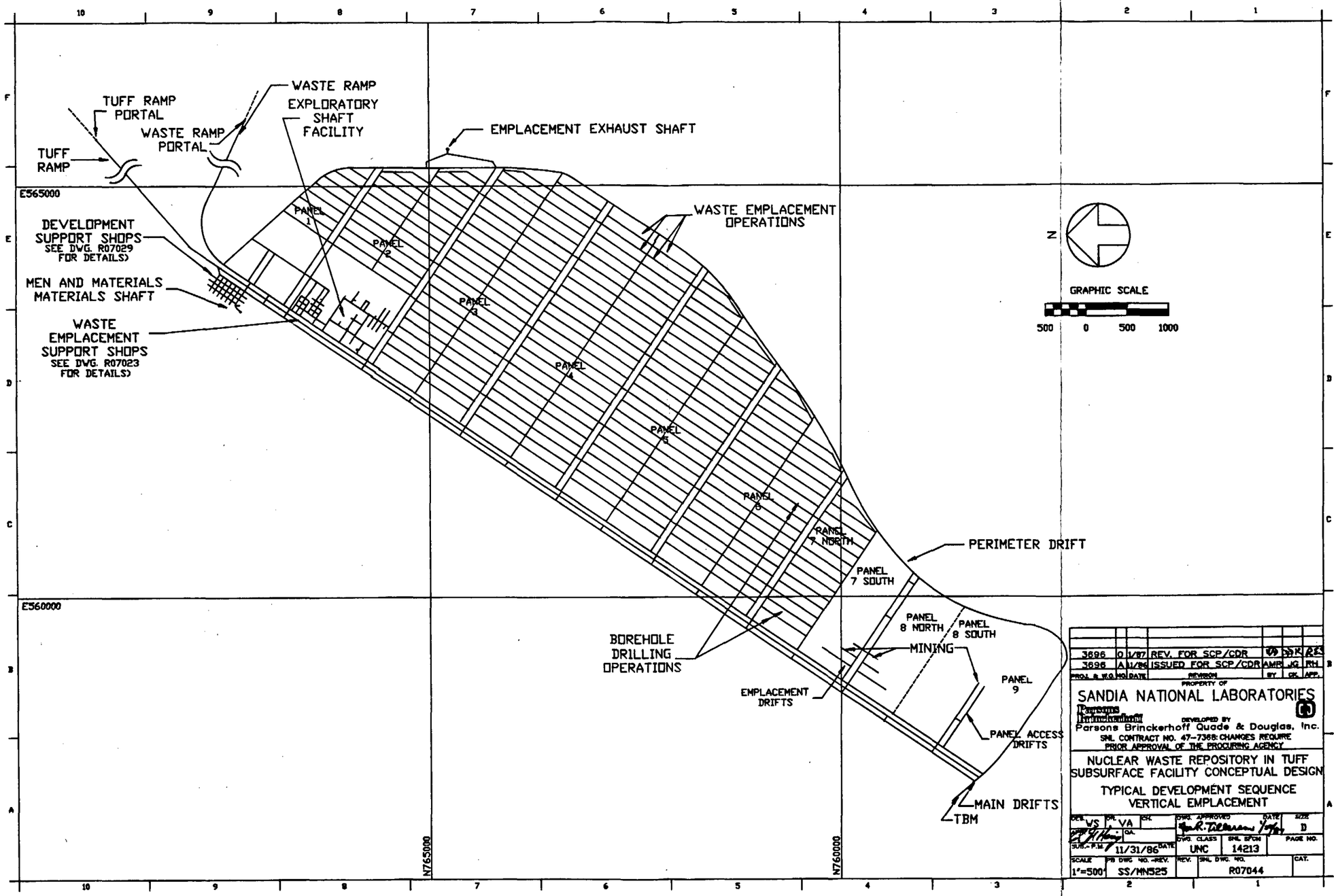
TUFF RAMP PORTAL
WASTE RAMP
EXPLORATORY SHAFT FACILITY
WASTE RAMP PORTAL
TUFF RAMP
EMPLACEMENT EXHAUST SHAFT
E565000
DEVELOPMENT SUPPORT SHOPS
SEE DWG. R07029 FOR DETAILS)
MEN AND MATERIALS MATERIALS SHAFT
WASTE EMPLACEMENT SUPPORT SHOPS
SEE DWG. R07023 FOR DETAILS)
PANEL 1
PANEL 2
PANEL 3
PANEL 4
PANEL 5
PANEL 6
PANEL 7 NORTH
PANEL 7 SOUTH
WASTE EMPLACEMENT OPERATIONS
PERIMETER DRIFT
E560000
BOREHOLE DRILLING OPERATIONS
PANEL 8 NORTH
PANEL 8 SOUTH
MINING
PANEL 9
EMPLACEMENT DRIFTS
PANEL ACCESS DRIFTS
MAIN DRIFTS
TBM
N765000
N760000
N
GRAPHIC SCALE
500 0 500 1000
3696 0 1/87 REV. FOR SCP/CDR
3696 A 1/86 ISSUED FOR SCP/CDR
PROPERTY OF
SANDIA NATIONAL LABORATORIES
DEVELOPED BY
Parsons Brinckerhoff Quade & Douglas, Inc.
SNL CONTRACT NO. 47-7368: CHANGES REQUIRE PRIOR APPROVAL OF THE PROCURING AGENCY
NUCLEAR WASTE REPOSITORY IN TUFF
SUBSURFACE FACILITY CONCEPTUAL DESIGN
TYPICAL DEVELOPMENT SEQUENCE
VERTICAL EMPLACEMENT
DES. WS
DR. VA
SURF.-P.M. 11/31/86
UNC
14213
D
1"=500'
SS/MN525
R07044

Figure 3-26.

The two exploratory shafts will continue to support the ESF until the men-and-materials shaft has been completed and both ramps and mains have been connected to the ESF. At this time, the development rate can be increased because the access and ventilation capability of the two ramps will be available and the permanent conveyor system for excavated tuff will have been installed in the tuff ramp. When these alternate accesses become available, the equipment in ES-1 will be removed, and the shafts will be converted to ventilation intakes for the waste emplacement area ventilation system.

Current plans for initial underground development do not call for the use of ES-1 and ES-2 for hauling excavated tuff. However, in future designs, ES-1 and ES-2 could be considered for use in aiding initial underground development, provided this use does not interfere with other activities in the ESF.

Excavation and construction of facilities in the shaft area include the development area shops, waste emplacement area shops, the training area, and performance confirmation area. These facilities are described further in the introduction to this chapter and in Section 4.4.

After the ramps have been completed and the shaft area has been excavated sufficiently to permit efficient operations, the waste emplacement area will be excavated and prepared. An area capable of handling the first few years of emplacement will be completed before first emplacement occurs in 1998. There is sufficient flexibility in the initial development schedule to meet emplacement schedule requirements as the emplacement rate increases to a total of 3,400 MTU/yr of spent fuel and DHLW.

3.3.1.4.2 Operations Phase

During the operations phase, the excavation and preparation of the waste emplacement panels proceed until the entire emplacement area has been filled. Excavation of at least one full panel must be completed in advance of waste emplacement operations to permit construction and maintenance of separate ventilation systems. Excavation of the emplacement area will be completed one or more years before waste emplacement is completed. Development and emplacement will commence in the northeast quadrant of the emplacement area and will proceed in a clockwise direction as indicated by the sequence of panel numbers in Figure 3-20.

The excavation sequence for a typical emplacement panel proceeds as follows. The three mains are developed to a point approximately two panel widths beyond the panel being developed. The panel access drifts are developed from the mains to the limit of the emplacement area boundary to confirm ground conditions. The perimeter drift is then advanced to intersect the panel access drifts, and a ventilation loop is established around a panel. The excavation of emplacement drifts then begins in the previous panel. This sequence is illustrated in Figure 3-26. In that example, the perimeter drift is completed to the southern end of the emplacement area before the emplacement drifts are excavated in the area that includes the southern half of Panel 7 and the northern half of Panel 8. Excavation of emplacement drifts may occur in one or two panels simultaneously.

The drilling and preparation of emplacement boreholes follows the completion of each 700-ft segment of emplacement drift. In the example given above, drilling will occur in the northern half of Panel 7 while excavation of the emplacement drifts starts between Panels 7 and 8. Once drilling in the northern half of Panel 7 has been completed, the southern half of Panel 7 will be started.

When a full panel (both northern and southern halves) has been completely developed, the panel's ventilation system will be converted from the development area ventilation system to the ventilation system for the emplacement area by constructing or relocating various bulkheads (Section 3.4). This sequence of construction of the emplacement panels and conversion for active emplacement continues until the emplacement area has been completed.

3.3.1.4.3 Caretaker Phase

Development of the underground facilities is complete when the last emplacement borehole has been drilled. The caretaker phase begins when emplacement ends and lasts until the beginning of closure and decommissioning (or retrieval, should it occur). The activities that occur during the caretaker period are described in Section 3.3.4.

3.3.1.5 Underground Development Equipment

The equipment used to develop the emplacement panels in both the vertical and horizontal configurations is shown on Figures 3-22 and 3-27, respectively, and is listed in Tables 3-14 and 3-15. Except for the drill for the horizontal borehole (Table 3-16), the equipment is currently available. Feasibility studies and conceptual designs for drilling and lining horizontal boreholes have been completed (The Robbins Company, 1984a, 1984b, 1985, 1987); these studies will be followed by fabrication of a development prototype boring machine to be used in proof-of-principle demonstrations.

3.3.2 Excavation of Emplacement Boreholes

Conceptual designs of the underground areas have been developed for both the vertical and horizontal emplacement configurations. The two configurations require different methods and equipment for excavating and lining the boreholes. The methods used for borehole construction are presented below. The equipment used for construction is described in Appendix D of this report.

3.3.2.1 Vertical Emplacement Configuration

In the vertical emplacement configuration, a borehole of sufficient length to accommodate a single waste container is excavated in the floor of the emplacement drift (Figure 3-12). Excavation of the borehole involves three steps: (1) drilling a small-diameter pilot hole, (2) reaming the top section of the borehole to accommodate the partial liner, and (3) reaming the remainder of the borehole to the design depth at a smaller diameter. The vertical borehole will be partially lined to provide

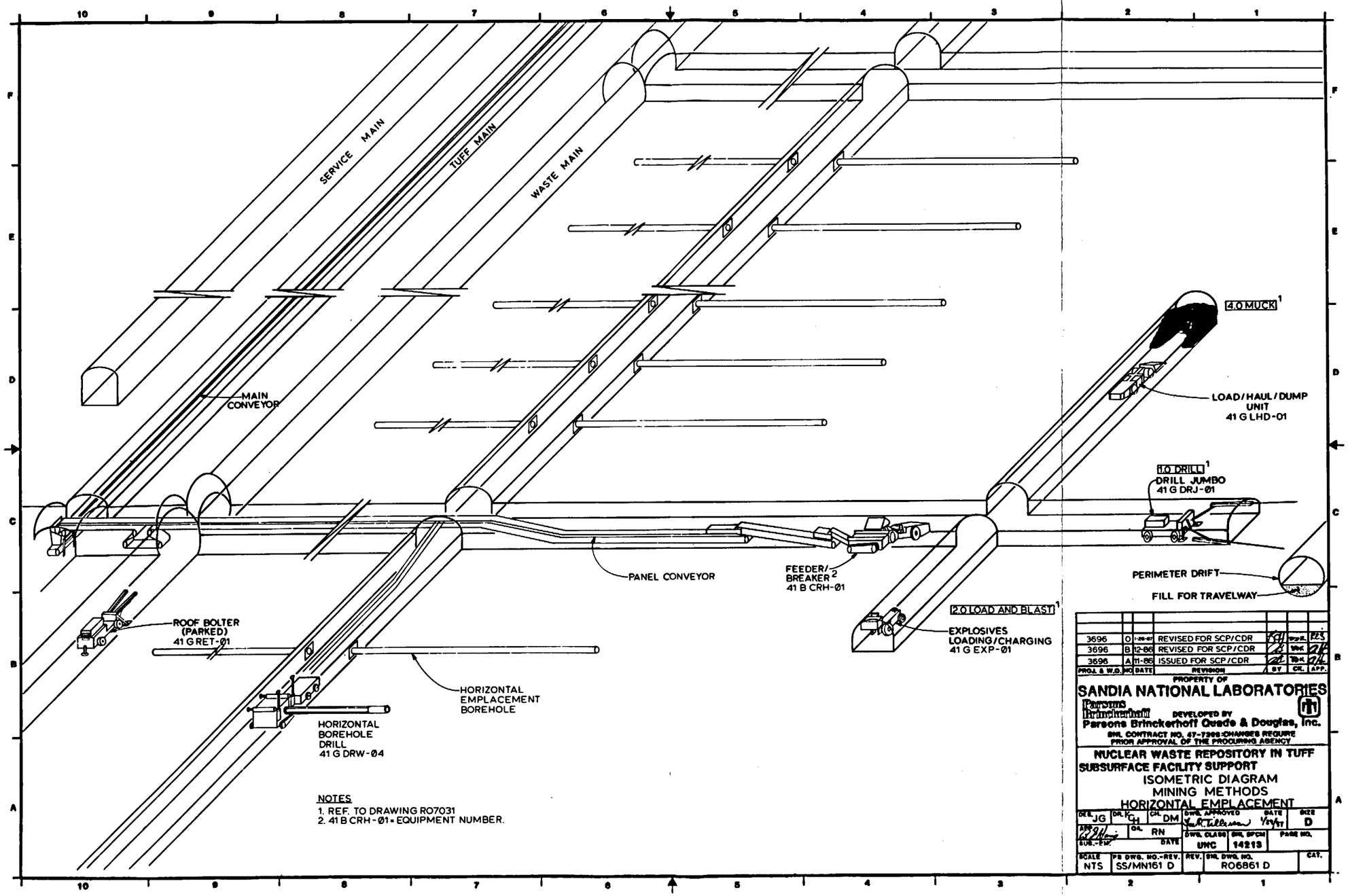
SERVICE MAIN
TUFF MAIN
WASTE MAIN
MAIN CONVEYOR
4.0 MUCK 1
LOAD/HAUL/DUMP UNIT 41 G LHD-01
1.0 DRILL 1
DRILL JUMBO 41 G DRJ-01
PERIMETER DRIFT
FILL FOR TRAVELWAY
PANEL CONVEYOR
FEEDER/BREAKER 2 41 B CRH-01
2.0 LOAD AND BLAST 1
EXPLOSIVES LOADING/CHARGING 41 G EXP-01
ROOF BOLTER (PARKED) 41 G RET-01
HORIZONTAL EMPLACEMENT BOREHOLE
HORIZONTAL BOREHOLE DRILL 41 G DRW-04
NOTES
1. REF. TO DRAWING R07031
2. 41 B CRH-01 = EQUIPMENT NUMBER.
3696 O 1-29-87 REVISED FOR SCP/CDR
3696 B 12-86 REVISED FOR SCP/CDR
3696 A 11-86 ISSUED FOR SCP/CDR
PROJ. & W.O. NO. DATE REVISION BY CK. APP.
PROPERTY OF
SANDIA NATIONAL LABORATORIES
Parsons Brinckerhoff
DEVELOPED BY
Parsons Brinckerhoff Quade & Douglas, Inc.
SNL CONTRACT NO. 67-7366: CHANGES REQUIRE PRIOR APPROVAL OF THE PROCURING AGENCY
NUCLEAR WASTE REPOSITORY IN TUFF
SUBSURFACE FACILITY SUPPORT
ISOMETRIC DIAGRAM
MINING METHODS
HORIZONTAL EMPLACEMENT
DR. JG
CK. DM
DWG. APPROVED
DATE 1/29/87
SIZE D
DR. RN
DATE
DWG. CLASS UNC
SNL SPCN 14213
PAGE NO.
SCALE NTS
PB DWG. NO.-REV. SS/MN161 D
REV.
SNL DWG. NO. R06861 D
CAT.

Figure 3-27.

TABLE 3-14

EQUIPMENT NEEDED FOR UNDERGROUND DEVELOPMENT IN THE VERTICAL EMPLACEMENT CONFIGURATION

Equipment Number	Equipment Description	Location	Number of Units[a]	Availability[b]
41 C CMP-01	Air compressor (1,500 cfm)	Development panel	4	CA
41 H CNV-01	Conveyor belt drive	Tuff ramp	1	CA
41 H CNV-02	Conveyor belt drive	Tuff main	2	CA
41 H CNV-04	Conveyor belt drive	Development panel	10	CA
41 G CON-01	Shotcrete truck with pump	Development panel	5	CA
41 G CON-02	Concrete-mixing and transport truck	Waste main and ramp	3	CA
41 G CON-03	Concrete-paving spreader	Waste main and ramp	2	CA
41 B CRH-01	Feeder/breaker	Development panel	4	CA
41 G DRJ-01	Drill jumbo	Development panel	4	CA
41 G EXP-01	Anfo-loading truck	Development panel	4	CA
41 G LHD-01	Load/haul/dump unit	Development panel	4	CA
41 G RBT-01	Roof-bolting machine	Development panel	5	CA
41 G SCL-01	Scaling machine	Development panel	4	CA
41 G TBM-01	25-ft-diameter TBM	Tuff ramp and waste main	1	CA
41 G TBM-02	23-ft-diameter TBM	Waste ramp and tuff main	1	CA

a. Includes spares.
b. CA = commercially available.

TABLE 3-15

EQUIPMENT NEEDED FOR UNDERGROUND DEVELOPMENT IN THE HORIZONTAL EMPLACEMENT CONFIGURATION

Equipment Number	Equipment Description	Location	Number of Units[a]	Availability[b]
41 C CMP-01	Air compressor (1,500 cfm)	Development panel	4	CA
41 H CNV-01	Conveyor belt drive	Tuff ramp	1	CA
41 H CNV-02	Conveyor belt drive	Tuff main	2	CA
41 H CNV-04	Conveyor belt drive	Development panel	10	CA
41 G CON-01	Shotcrete truck with pump	Development panel	5	CA
41 G CON-02	Concrete-mixing and transport truck	Waste main and ramp	3	CA
41 G CON-03	Concrete-paving spreader	Waste main and ramp	2	CA
41 B CRH-01	Feeder/breaker	Development panel	3	CA
41 G DRJ-01	Drill jumbo	Development panel	3	CA
41 G EXP-01	Anfo-loading truck	Development panel	3	CA
41 G LHD-01	Load/haul/dump unit	Development panel	3	CA
41 G RBT-01	Roof-bolting machine	Development panel	3	CA
41 G SCL-01	Scaling machine	Development panel	2	CA
41 G TBM-03	21-ft-diameter TBM	Waste ramp, waste main, tuff ramp	2	CA
41 G TBM-04	21-ft-diameter TBM	Perimeter drift	2	CA

a. Includes spares.
b. CA = commercially available.

support for the shield plug, to prevent rock from falling onto the top of the waste container, and to provide a fitting for installing the shielding closure.

TABLE 3-16

EQUIPMENT LIST FOR DRILLING BOREHOLES

Equipment Number	Equipment Description	Location	Number of Units[a]	Availability[b]
Vertical Configuration				
41 G DRW-01	Pilot hole drill	Development area	5	CA
41 G DRW-02	Reamer drill with vacuum system	Development area	7	CA
Horizontal Configuration				
41 G DRW-04	Drill for horizontal borehole	Development area	3	ND

a. Includes spares.
b. CA = commercially available; ND = needs development.

Drilling, reaming, and lining a vertical borehole are currently feasible using state-of-the-art drilling equipment, although improvements in present technology may facilitate the operation. Figure 3-22 shows the method and sequence of excavation for the vertical configuration. The corresponding block flow diagram is shown in Figure 3-28. A more detailed description of drilling operations for the vertical borehole is provided by The Robbins Company (1984a). A list of major equipment required for excavating the vertical boreholes is given in Table 3-16.

3.3.2.2 Horizontal Emplacement Configuration

In the horizontal configuration, a number of waste containers are emplaced in a long horizontal borehole (Figure 3-13). To ensure stability in the horizontal borehole, a steel liner, which extends the entire length of the borehole, is installed during drilling. The excavation and lining of a horizontal borehole of this length require development of new equipment based on existing technology.

The mining methods and sequence in the horizontal emplacement configuration are shown in Figure 3-27. The drilling operation for excavating the horizontal emplacement boreholes occurs in five stages: (1) setting up equipment, (2) installing a collar in the outer portion of the borehole

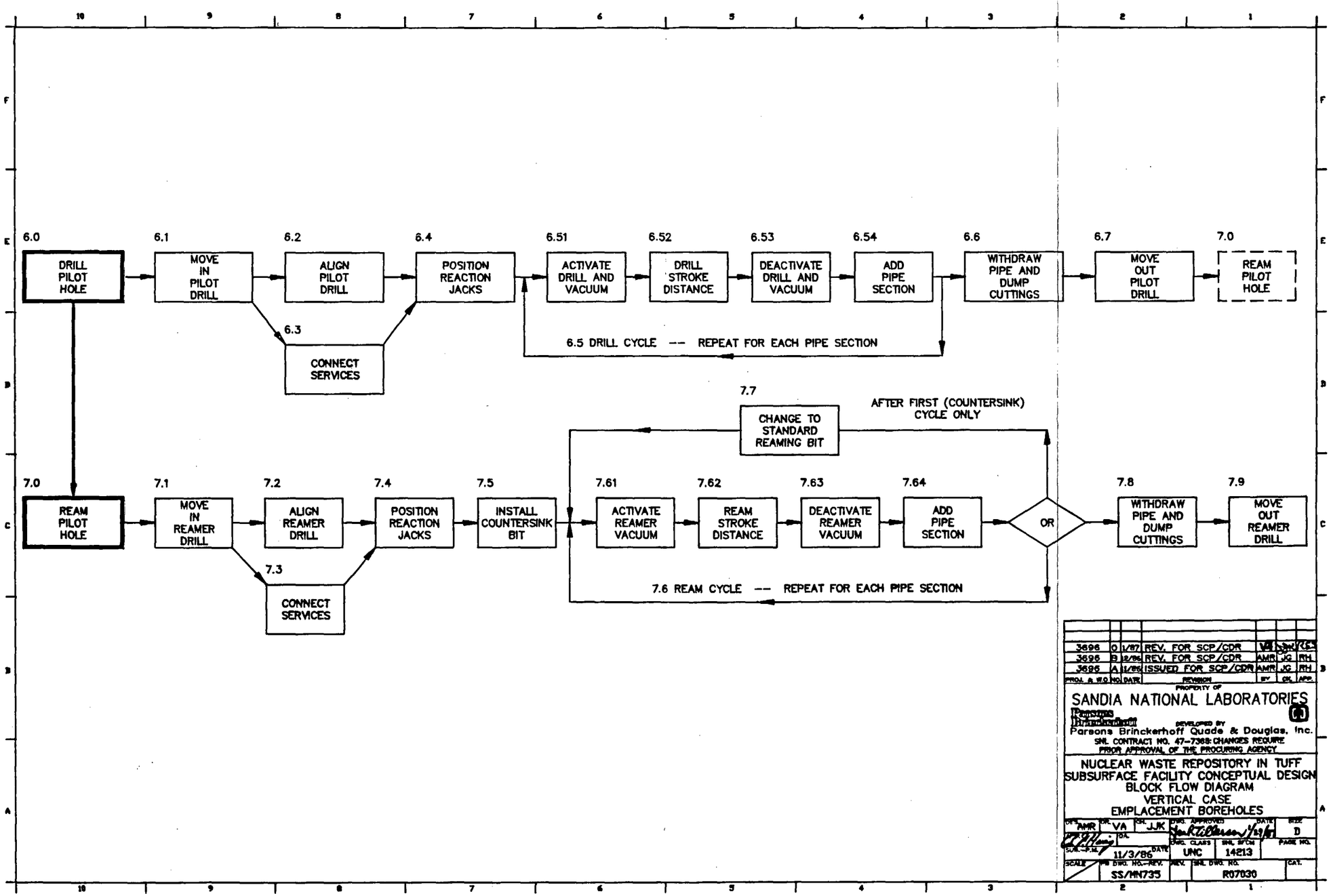
6.0
DRILL PILOT HOLE
6.1
MOVE IN PILOT DRILL
6.2
ALIGN PILOT DRILL
6.3
CONNECT SERVICES
6.4
POSITION REACTION JACKS
6.51
ACTIVATE DRILL AND VACUUM
6.52
DRILL STROKE DISTANCE
6.53
DEACTIVATE DRILL AND VACUUM
6.54
ADD PIPE SECTION
6.5 DRILL CYCLE -- REPEAT FOR EACH PIPE SECTION
6.6
WITHDRAW PIPE AND DUMP CUTTINGS
6.7
MOVE OUT PILOT DRILL
7.0
REAM PILOT HOLE
7.7
CHANGE TO STANDARD REAMING BIT
AFTER FIRST (COUNTERSINK) CYCLE ONLY
7.0
REAM PILOT HOLE
7.1
MOVE IN REAMER DRILL
7.2
ALIGN REAMER DRILL
7.3
CONNECT SERVICES
7.4
POSITION REACTION JACKS
7.5
INSTALL COUNTERSINK BIT
7.61
ACTIVATE REAMER VACUUM
7.62
REAM STROKE DISTANCE
7.63
DEACTIVATE REAMER VACUUM
7.64
ADD PIPE SECTION
OR
7.6 REAM CYCLE -- REPEAT FOR EACH PIPE SECTION
7.8
WITHDRAW PIPE AND DUMP CUTTINGS
7.9
MOVE OUT REAMER DRILL
3696 0 1/87 REV. FOR SCP/CDR VA JJK RFS
3696 B 12/86 REV. FOR SCP/CDR AMR JG RH
3696 A 11/86 ISSUED FOR SCP/CDR AMR JG RH
PROJ. & W.O. NO. DATE REVISION BY CK. APP.
PROPERTY OF
SANDIA NATIONAL LABORATORIES
DEVELOPED BY
Parsons Brinckerhoff Quade & Douglas, Inc.
SNL CONTRACT NO. 47-7368: CHANGES REQUIRE PRIOR APPROVAL OF THE PROCURING AGENCY
NUCLEAR WASTE REPOSITORY IN TUFF
SUBSURFACE FACILITY CONCEPTUAL DESIGN
BLOCK FLOW DIAGRAM
VERTICAL CASE
EMPLACEMENT BOREHOLES
DR. AMR
DR. VA
CHK. JJK
DWG. APPROVED
DATE 11/29/87
SIZE D
SUBL.-P.M.
DATE 11/3/86
DWG. CLASS UNC
SNL S/CM 14213
PAGE NO.
SCALE
PB DWG. NO.-REV. SS/MN735
REV.
SNL DWG. NO. R07030
CAT.

Figure 3-28.

and installing the first liner section and in-hole power unit, (3) lengthening the borehole by drilling and adding liner sections, (4) withdrawing the drilling equipment from the borehole, and (5) preparing the collar for attaching the shielding closure. The block flow diagram in Figure 3-29 shows the sequence followed in drilling horizontal boreholes.

A more detailed description of proposed drilling equipment and methods is provided by The Robbins Company (1987). A list of major equipment for the excavation of the horizontal emplacement boreholes is provided in Table 3-16.

3.3.3 Underground Support and Maintenance Operations

Numerous activities are performed to support the development of the drifts and boreholes. Many of these activities are started during construction of the access shafts and ramps and are moved underground as soon as construction of the support facility has been completed. Other activities are phased in as development of the underground facility progresses. A brief description of each support function is provided below.

Maintenance support includes both preventive maintenance and repair of all of the equipment in the underground facility, including mobile equipment, fixed equipment, and equipment in the support facilities. Shop facilities for maintenance and repair are provided in both the development and waste emplacement areas.

Most of the materials necessary to support underground operations enter the underground facility through the men-and-materials shaft. Materials-handling and supply personnel receive palletized materials at the shaft surface facility and transfer them to the shaft conveyance. Materials-handling personnel transfer the materials from the shaft to the warehouse area in the development area or waste emplacement area. Some bulk materials, such as liners for the emplacement boreholes, are delivered directly to the area being developed. Other materials receive special handling. Explosives are delivered directly to storage areas near the drift excavation work area. Fuels and hydraulic fluids are lowered through a line in the men-and-materials shaft. Fuels and lubricants are stored in shops equipped with special fire protection systems. Supplies are delivered from the warehouse to the development and waste emplacement areas by materials-handling personnel.

Construction support activities continue beyond the initial construction phase and include the extension of the primary electrical and piping systems, construction of drainage control facilities, extension and removal of conveyor equipment, construction or relocation of ventilation control devices, and construction of roadways. These facilities are described in Section 4.4.3.

Drift maintenance personnel perform inspection, secondary scaling, and repair in all drifts in such common areas as the mains, ramps, shops, and completed waste emplacement panels. The drifts in the completed panels are inspected periodically and repaired as necessary. In the vertical configuration, the walls of the emplacement drifts, which had been closed off after completion of emplacement, may become very hot (over 90°C) several years after emplacement. In these areas, it is tentatively

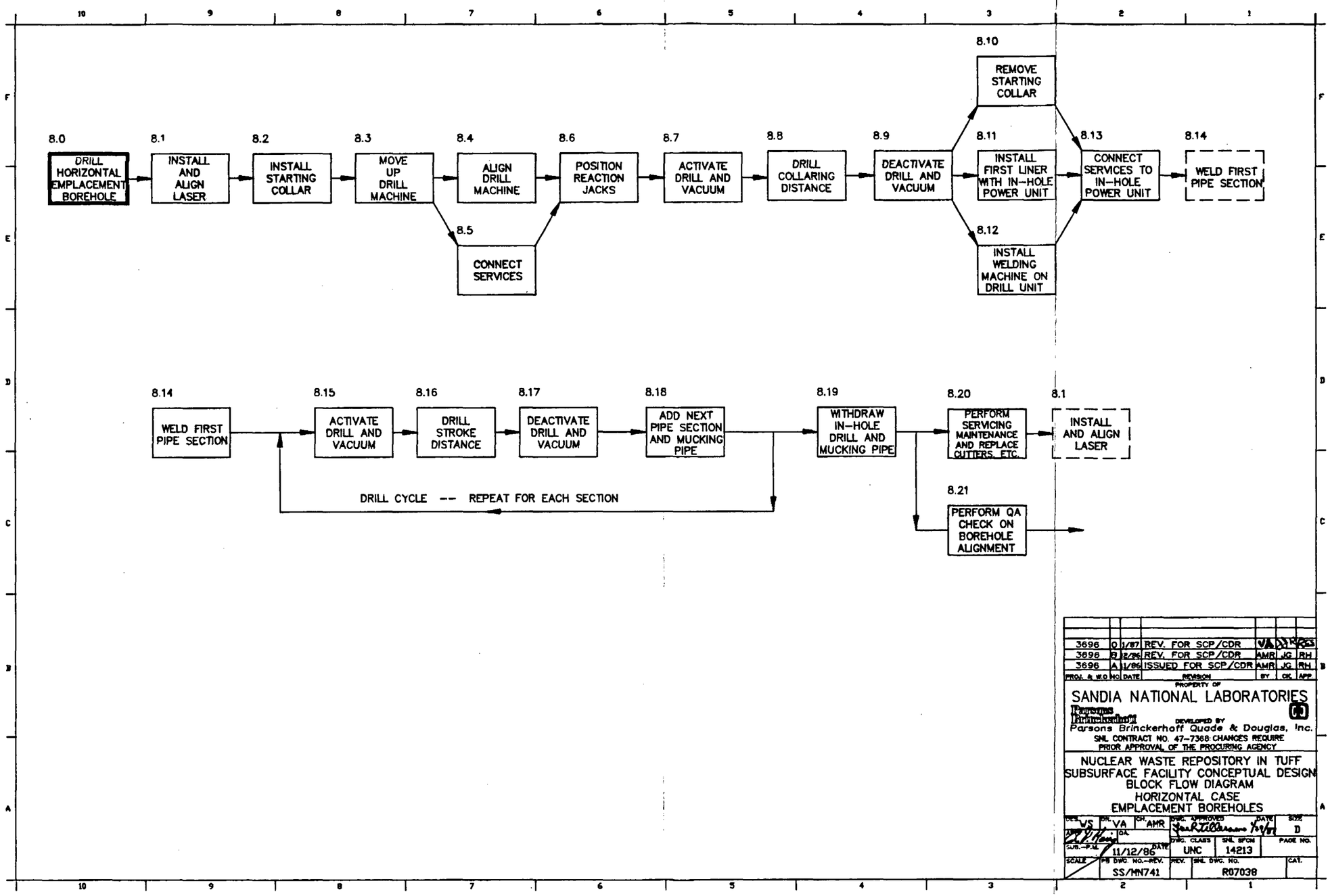
8.0
DRILL HORIZONTAL EMPLACEMENT BOREHOLE
8.1
INSTALL AND ALIGN LASER
8.2
INSTALL STARTING COLLAR
8.3
MOVE UP DRILL MACHINE
8.4
ALIGN DRILL MACHINE
8.5
CONNECT SERVICES
8.6
POSITION REACTION JACKS
8.7
ACTIVATE DRILL AND VACUUM
8.8
DRILL COLLARING DISTANCE
8.9
DEACTIVATE DRILL AND VACUUM
8.10
REMOVE STARTING COLLAR
8.11
INSTALL FIRST LINER WITH IN-HOLE POWER UNIT
8.12
INSTALL WELDING MACHINE ON DRILL UNIT
8.13
CONNECT SERVICES TO IN-HOLE POWER UNIT
8.14
WELD FIRST PIPE SECTION
8.14
WELD FIRST PIPE SECTION
8.15
ACTIVATE DRILL AND VACUUM
8.16
DRILL STROKE DISTANCE
8.17
DEACTIVATE DRILL AND VACUUM
8.18
ADD NEXT PIPE SECTION AND MUCKING PIPE
DRILL CYCLE -- REPEAT FOR EACH SECTION
8.19
WITHDRAW IN-HOLE DRILL AND MUCKING PIPE
8.20
PERFORM SERVICING MAINTENANCE AND REPLACE CUTTERS, ETC.
8.21
PERFORM QA CHECK ON BOREHOLE ALIGNMENT
8.1
INSTALL AND ALIGN LASER
3696 0 1/87 REV. FOR SCP/CDR VA
3696 B 12/86 REV. FOR SCP/CDR AMR JG RH
3696 A 11/86 ISSUED FOR SCP/CDR AMR JG RH
PROJ. & W.O. NO. DATE REVISION BY CK. APP.
PROPERTY OF
SANDIA NATIONAL LABORATORIES
DEVELOPED BY
Parsons Brinckerhoff Quade & Douglas, Inc.
SNL CONTRACT NO. 47-7368 CHANGES REQUIRE PRIOR APPROVAL OF THE PROCURING AGENCY
NUCLEAR WASTE REPOSITORY IN TUFF
SUBSURFACE FACILITY CONCEPTUAL DESIGN
BLOCK FLOW DIAGRAM
HORIZONTAL CASE
EMPLACEMENT BOREHOLES
DES. VS DR. VA CH. AMR DWG. APPROVED DATE SIZE D
DATE 11/12/86 DWG. CLASS UNC SNL SPCM 14213 PAGE NO.
SCALE PB DWG. NO.-REV. SS/MN741 REV. SNL DWG. NO. R07038 CAT.

Figure 3-29.

planned to use a remotely controlled robot for inspection. Before repairs in the hot emplacement drifts can be made, the drifts will have to be ventilated to establish an acceptable work environment. The temperature levels in the horizontal configuration will exceed 38°C after about 25 yr; therefore, an inspection robot may be necessary during the caretaker phase. The roads are graded and repaired as part of the drift maintenance program.

An underground first aid and decontamination station is provided. Medical personnel are stationed either at the surface facilities associated with the men-and-materials shaft or at the central surface facilities area. Key underground personnel are designated for medical emergencies and are trained and certified to respond when needed.

Trained and certified mine rescue teams are provided, as required by Mine Safety and Health Administration regulations (30 CFR 57; DOL, 1985). Three teams of at least six members are available in case of emergency.

Monitoring equipment is installed to gather information pertaining to performance confirmation, ventilation, geotechnical assessment, and radiation. These data are transmitted to an underground control facility, where data storage and readout equipment are monitored continuously. Data summaries and critical alarm information are transmitted to the monitoring facility in the central surface facilities.

Various support and control activities are necessary during operations. These operations include supervision, planning and scheduling, record keeping, and general administration. Control stations are planned at the top and bottom of the waste ramp and at the personnel doors and airlocks between the development and waste emplacement areas. Movement of personnel between these areas is monitored, and movement of the waste transporters is also controlled.

An engineering and surveying group supports repository operations. The duties of this group include assisting in planning and scheduling, surveying to control mine development, and drafting maps.

All personnel working underground are required periodically to receive training in mine safety and procedures. In addition, skills training is conducted for new personnel or personnel transferring to new positions for the purpose of increasing safety awareness, performance, and efficiency.

3.3.4 Caretaker Phase

Caretaker operations will be initiated after the last waste has been emplaced. These operations will continue until a license amendment to close the repository has been granted. Operations during the caretaker period include (1) performance confirmation, (2) maintenance, (3) radiological monitoring, and (4) security. At the start of the caretaker period, all facilities that are not required to support these operations are decontaminated, if necessary, and placed in a standby configuration (mothballed) to reduce operating costs during the caretaker period.

Maintenance activities are performed both on the surface and underground. On the surface, maintenance is continuously performed at the facilities needed to support performance confirmation, site monitoring, emergency response, and physical security.

Underground maintenance consists of monitoring and repairing accesses, hoisting systems, ventilation systems, and utilities systems. All elements of the underground ventilation system are maintained and operated periodically. The portion of the ventilation system that supports performance confirmation work is operated continuously. The subsurface facilities are periodically inspected, and maintenance is provided, as necessary. Maintenance of the underground openings consists mainly of the repair and replacement of the opening support system (e.g., rock bolts and wire mesh) and the repair of the roadways.

Facilities that are likely to be placed in a standby mode include the two waste-handling buildings, the waste treatment building, and portions of the service and repair shops and warehouses.

The reduction of operations activities to only those described in this section will allow a major reduction in staffing from that required during the development and emplacement phases. Consequently, operating costs in the caretaker phase will be much smaller than those in the emplacement phase.

3.4 Ventilation

The ventilation system described in this section is adequate to support normal emplacement operations, drift inspection, maintenance, and selected removal of individual waste packages for performance confirmation purposes. The system needed to support a full-scale retrieval operation will be developed as a part of the ACD.

The three mains in the underground facility are used for both operating activities and supply and exhaust of ventilation air. The justifications for this dual-purpose design approach, in lieu of a design that uses dedicated mains for ventilation, are described below.

The mains are in constant use during the operating period and must be continuously cooled to maintain an adequate working environment. Further, cooling of all mains by ventilation flows minimizes stresses in rock caused by thermal expansion.

The mains are not used to carry exhaust air from the potentially contaminated emplacement areas, and there is little or no potential for the presence of hazardous or explosive concentrations of gases. Potential quantities of radon are discussed in Section 2.5.1. These quantities can be adequately diluted by ventilation flows much smaller than those provided by the conceptual design. This conclusion is substantiated by experience with tunnel systems at the NTS.

The high rock strength in the target horizon and the low extraction ratios minimize the potential for loss of ventilation that would result from catastrophic collapse of the mains.

The dual-purpose mains require considerably less underground area than would a system of dedicated mains, and associated development costs are proportionately less.

3.4.1 General Overview and Description of the System

Ventilation of the underground facilities is provided by two independent ventilation systems: one system provides air for development activities, and the other provides air for waste emplacement operations. Connections between the two ventilation systems are sealed with bulkheads or double doors.

To ensure that leakage occurs only from the development area to the emplacement area, the emplacement area is always maintained at a pressure lower than that of the development area. The pressure differential between the waste emplacement and development areas is attained by primary forcing fans located at the collar of the men-and-materials shaft and exhausting fans at the collar of the waste emplacement area exhaust shaft.

The performance of the ventilation systems is monitored continuously at surface and underground control centers. The monitoring system has three goals: (1) to maintain an immediate measure of the working environment in the emplacement and development areas; (2) to provide immediate notice of accidents, including fire and incidents involving radioactive material; and (3) to activate appropriate measures, such as evacuation of personnel, redirection of exhaust air from the waste emplacement area through filters, and dispatch of emergency crews.

During normal operations, return air from the ventilation system in the emplacement area is exhausted directly to the atmosphere. However, if the monitors detect a radiation release, the return air is routed through a set of filters, including high-efficiency particulate air (HEPA) filters, before discharge to the atmosphere (Figure 3-30). The HEPA filters are designed to handle about one-half the maximum airflow requirements. Monitors for airborne radiation are located in the waste emplacement panels, thus permitting early detection and sufficient time to activate the HEPA filter isolation dampers as shown in Figure 3-30.

The concepts for underground ventilation are based on the layout and development sequences presented in Sections 3.3 and 4.4. The basic ventilation layout consists of four shafts, two ramps (Figure 3-20), three mains, the emplacement areas on either side of the mains, and a perimeter drift that encircles the emplacement area.

The main components of the ventilation system in the development area are (1) the men-and-materials shaft, which takes air from the surface to the service main from which it is distributed throughout the development area, and (2) the tuff main, which carries air from the development area through the tuff ramp to be exhausted at the surface.

The main components of the intake ventilation system in the waste emplacement area are the exploratory shafts and the waste ramp. These passageways take air from the surface to the waste main, which carries

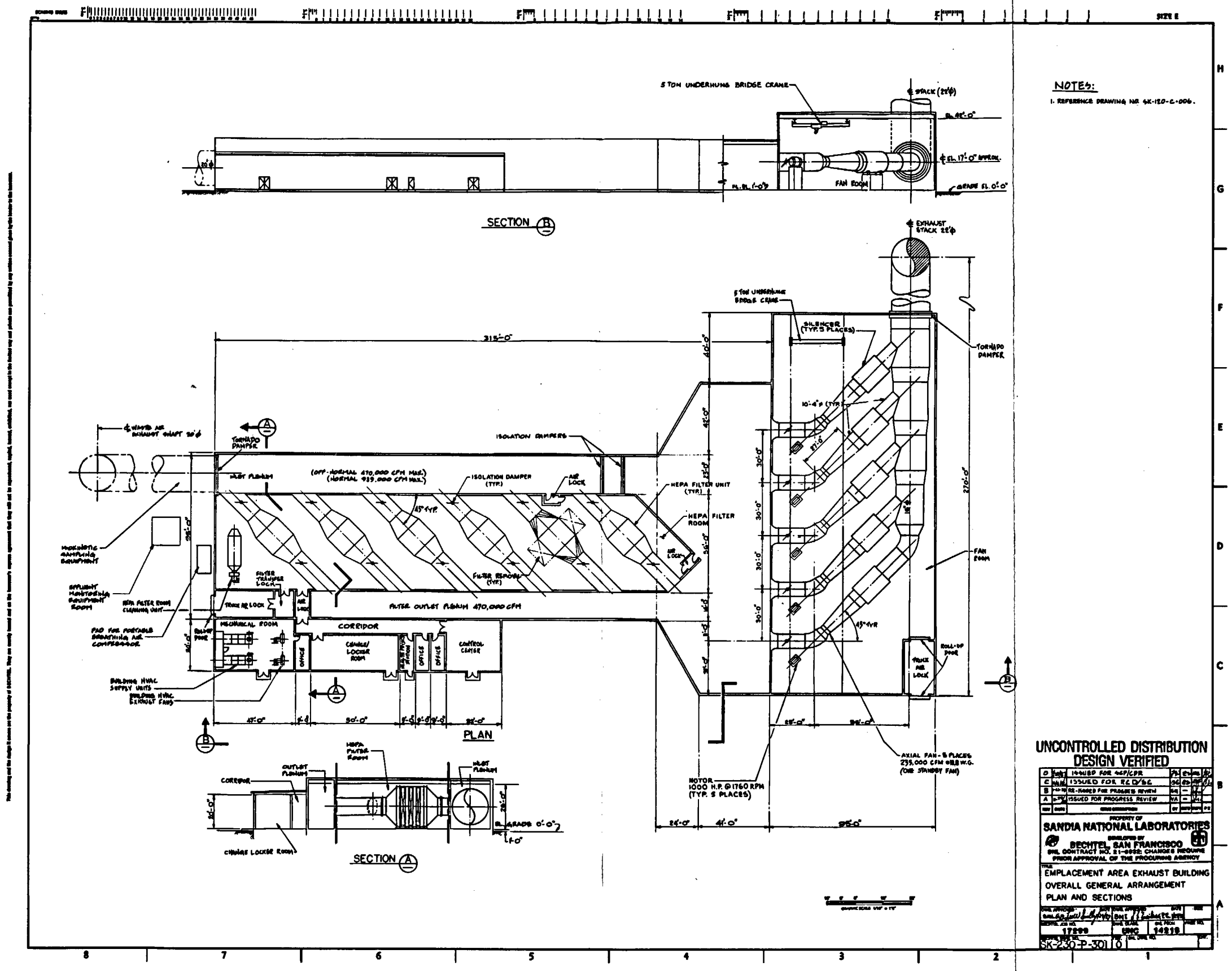

NOTES:

1. REFERENCE DRAWING NO. SK-120-C-006.

UNCONTROLLED DISTRIBUTION
DESIGN VERIFIED

D			ISSUED FOR 90% P/C/PR				
C			ISSUED FOR REVIEW				
B			RE-ISSUED FOR PROGRESS REVIEW				
A			ISSUED FOR PROGRESS REVIEW				

PROPERTY OF
SANDIA NATIONAL LABORATORIES
DEVELOPED BY
BECHTEL SAN FRANCISCO
SNL CONTRACT NO. 21-9952; CHANGES REQUIRE PRIOR APPROVAL OF THE PROCURING AGENCY

TITLE
EMPLACEMENT AREA EXHAUST BUILDING
OVERALL GENERAL ARRANGEMENT
PLAN AND SECTIONS

BECHTEL JOB NO. 17299 | DWG SIZE E | SNC | 14219 | SK-230-P-301 | 0

Figure 3-30.

the air to the waste emplacement area. Air from the waste emplacement area is carried through the perimeter drift to the emplacement area exhaust shaft, which exhausts the air at the surface.

The waste emplacement area ventilation system is designed to ensure safe working conditions during waste transport, emplacement, and retrieval operations. In this system, air is continuously passed through the areas used for training, performance confirmation, the waste emplacement shop, and the decontamination facility.

Spent fuel and DHLW are emplaced in the same drift in both emplacement configurations. To emplace the various waste types at the required rate (Table 3-6), at least two emplacement drifts (one in which spent fuel is being emplaced while DHLW or WVHLW is being emplaced in the other) must be available for the waste transporters. However, to emplace the waste in a timely manner even if unforeseen delays occur, four drifts will be ventilated for waste emplacement operations. The current strategy is to maintain at least two drifts at 45,000 cfm and two standby drifts at 20,000 cfm. If a delay in emplacement were to occur in a drift, the airflow in that drift could be reduced to 20,000 cfm (because use of diesel equipment would be reduced and use of nonpolluting, electrically driven equipment would be increased), and a new emplacement drift could be ventilated at 45,000 cfm. Thus, if delays were to occur in activities in one or both of the two drifts ventilated at 45,000 cfm, ventilation could be increased to support the increase of activity in the third and fourth drifts, as necessary.

Two computer codes (Appendix C) have been used to design the ventilation and cooling system: VNETPC (Ventilation Network Analysis), which simulates the underground airflow distribution and calculates the fan requirements, air resistance, and frictional pressure losses; and CLIMSIM (Climatic Simulation), which simulates the psychrometric and environmental conditions in the airways. The analysis procedures used are described in Appendix C.

The design analyses consisted of determining the airflow distribution and fan requirements, as well as the resulting climatic conditions throughout the underground facility at specific times during the life of the repository. Two ventilation scenarios were analyzed for each emplacement configuration. The first scenario (Figure 3-31) depicts the development of the underground facility at the greatest distance from the base of the tuff ramp, when the demand on the ventilation system for the development area is expected to be the greatest. The second scenario (Figure 3-32) shows development nearly completed while emplacement operations are occurring in the next-to-last panel and cooling operations are occurring in another panel. Ventilation requirements for the waste emplacement area during caretaker or retrieval operations are not expected to exceed the requirements determined for these two scenarios.

3.4.2 Vertical Emplacement Configuration

3.4.2.1 Maximum Ventilation Airflow Requirements for the Development Area

The maximum airflow demands on the ventilation system for the development area are expected to occur when mining operations are farthest

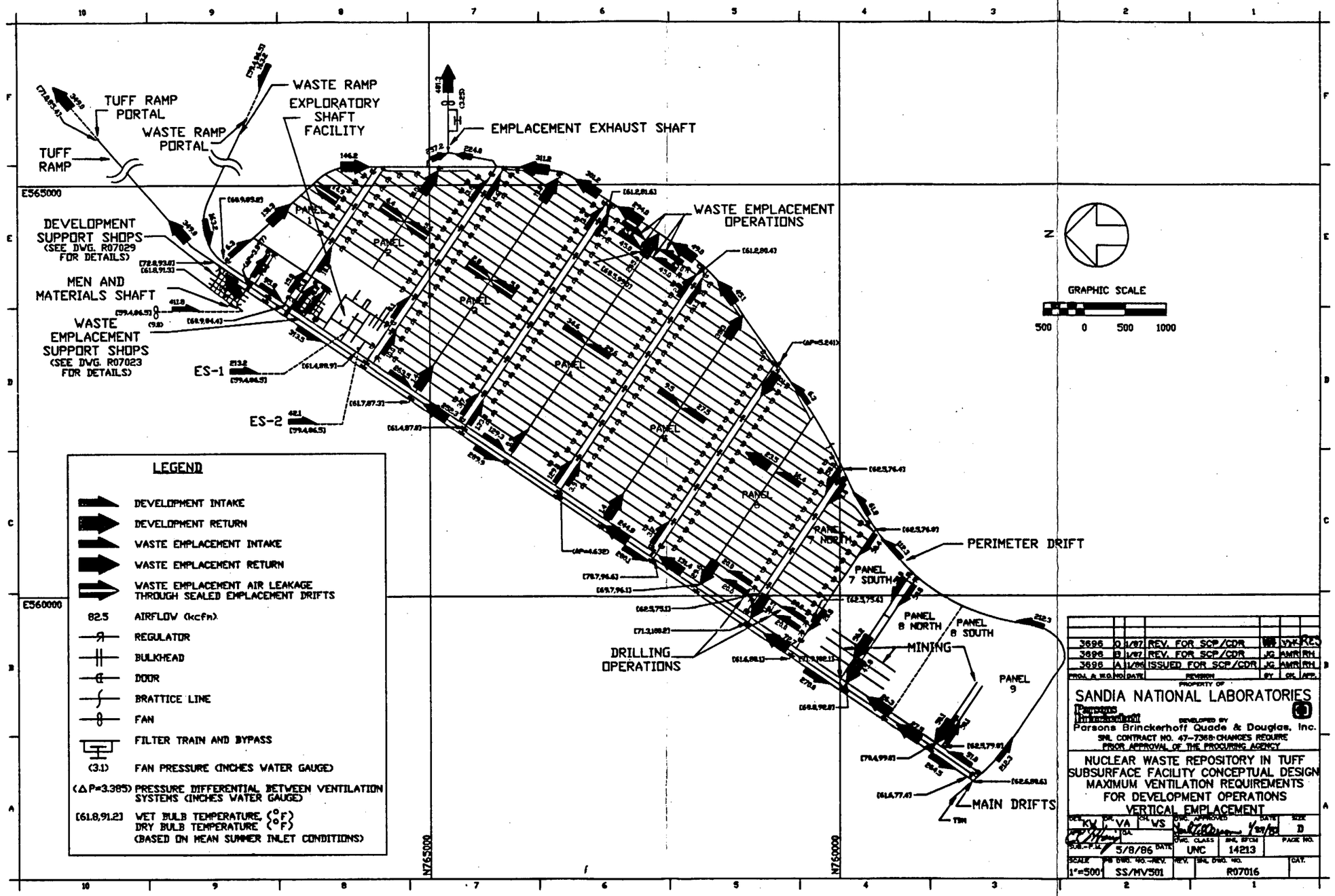
TUFF RAMP PORTAL
TUFF RAMP
WASTE RAMP PORTAL
WASTE RAMP
EXPLORATORY SHAFT FACILITY
EMPLACEMENT EXHAUST SHAFT
DEVELOPMENT SUPPORT SHOPS (SEE DWG. R07029 FOR DETAILS)
MEN AND MATERIALS SHAFT
WASTE EMPLACEMENT SUPPORT SHOPS (SEE DWG. R07023 FOR DETAILS)
ES-1
ES-2
WASTE EMPLACEMENT OPERATIONS
PERIMETER DRIFT
DRILLING OPERATIONS
MINING
MAIN DRIFTS
PANEL 1
PANEL 2
PANEL 3
PANEL 4
PANEL 5
PANEL 6
PANEL 7 NORTH
PANEL 7 SOUTH
PANEL 8 NORTH
PANEL 8 SOUTH
PANEL 9
E565000
E560000
N765000
N760000
LEGEND
DEVELOPMENT INTAKE
DEVELOPMENT RETURN
WASTE EMPLACEMENT INTAKE
WASTE EMPLACEMENT RETURN
WASTE EMPLACEMENT AIR LEAKAGE THROUGH SEALED EMPLACEMENT DRIFTS
82.5 AIRFLOW (kcfm)
REGULATOR
BULKHEAD
DOOR
BRATTICE LINE
FAN
FILTER TRAIN AND BYPASS
(3.1) FAN PRESSURE (INCHES WATER GAUGE)
(ΔP=3.385) PRESSURE DIFFERENTIAL BETWEEN VENTILATION SYSTEMS (INCHES WATER GAUGE)
[61.8,91.2] WET BULB TEMPERATURE, (°F) DRY BULB TEMPERATURE (°F) (BASED ON MEAN SUMMER INLET CONDITIONS)
N
GRAPHIC SCALE
500 0 500 1000
3696 D 1/87 REV. FOR SCP/CDR
3696 B 1/87 REV. FOR SCP/CDR
3696 A 11/86 ISSUED FOR SCP/CDR
PROPERTY OF
SANDIA NATIONAL LABORATORIES
Parsons Brinckerhoff
DEVELOPED BY
Parsons Brinckerhoff Quade & Douglas, Inc.
SNL CONTRACT NO. 47-7368 CHANGES REQUIRE PRIOR APPROVAL OF THE PROCURING AGENCY
NUCLEAR WASTE REPOSITORY IN TUFF
SUBSURFACE FACILITY CONCEPTUAL DESIGN
MAXIMUM VENTILATION REQUIREMENTS
FOR DEVELOPMENT OPERATIONS
VERTICAL EMPLACEMENT
KV VA VS
5/8/86
UNC 14213
1"=500' SS/MV501 R07016
D

Figure 3-31.

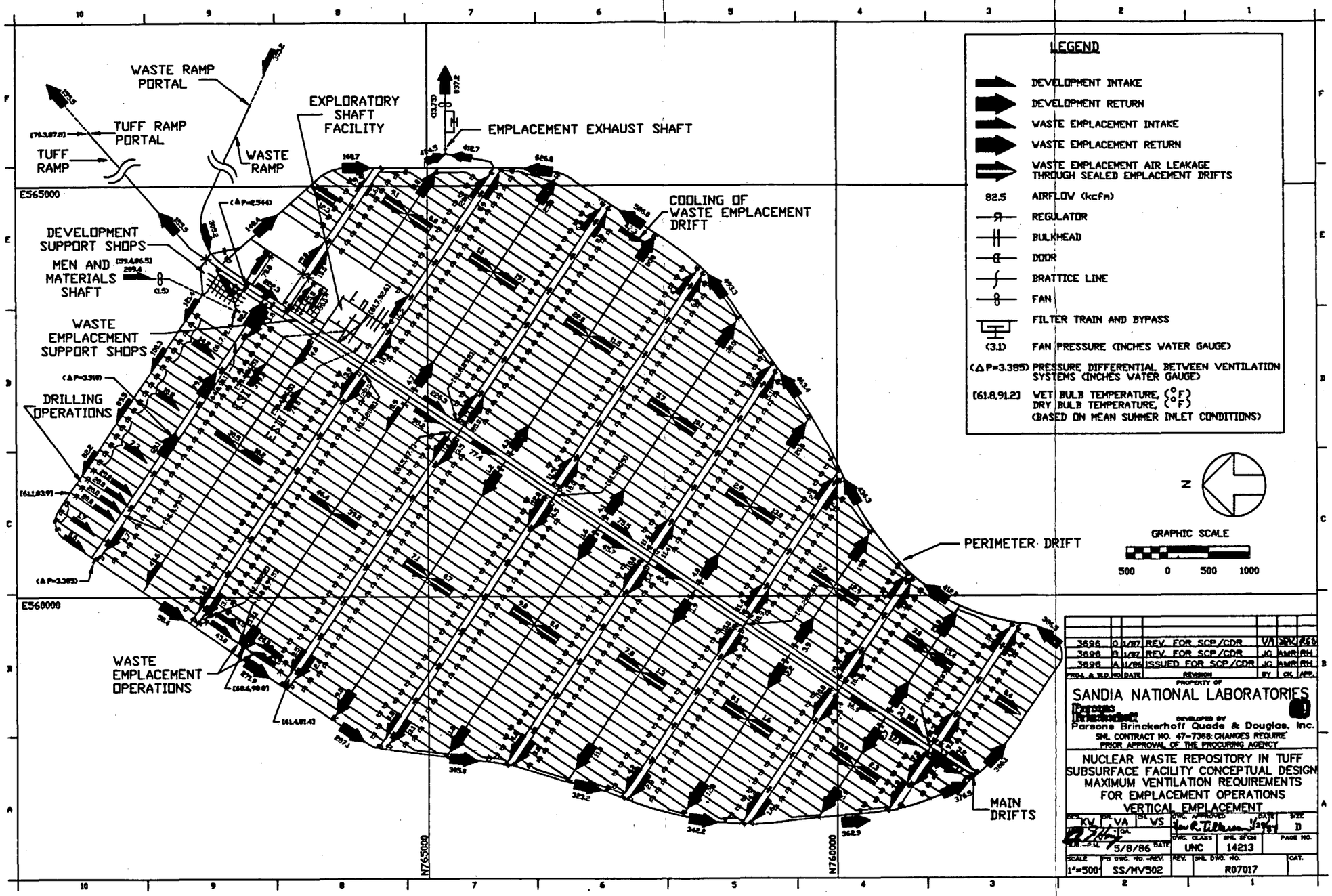
WASTE RAMP PORTAL
TUFF RAMP PORTAL
TUFF RAMP
WASTE RAMP
EXPLORATORY SHAFT FACILITY
EMPLACEMENT EXHAUST SHAFT
COOLING OF WASTE EMPLACEMENT DRIFT
DEVELOPMENT SUPPORT SHOPS
MEN AND MATERIALS SHAFT
WASTE EMPLACEMENT SUPPORT SHOPS
DRILLING OPERATIONS
PERIMETER DRIFT
WASTE EMPLACEMENT OPERATIONS
MAIN DRIFTS
E565000
E560000
N765000
N760000
LEGEND
DEVELOPMENT INTAKE
DEVELOPMENT RETURN
WASTE EMPLACEMENT INTAKE
WASTE EMPLACEMENT RETURN
WASTE EMPLACEMENT AIR LEAKAGE THROUGH SEALED EMPLACEMENT DRIFTS
82.5 AIRFLOW (kcfm)
REGULATOR
BULKHEAD
DOOR
BRATTICE LINE
FAN
FILTER TRAIN AND BYPASS
(3.1) FAN PRESSURE (INCHES WATER GAUGE)
(ΔP=3.385) PRESSURE DIFFERENTIAL BETWEEN VENTILATION SYSTEMS (INCHES WATER GAUGE)
[61.8,91.2] WET BULB TEMPERATURE, (°F) DRY BULB TEMPERATURE, (°F) (BASED ON MEAN SUMMER INLET CONDITIONS)
N
GRAPHIC SCALE
500 0 500 1000
3696 0 1/87 REV. FOR SCP/CDR VA
3696 B 1/87 REV. FOR SCP/CDR JG AMR RH
3696 A 11/86 ISSUED FOR SCP/CDR JG AMR RH
PROJ. & W.O. NO. DATE REVISION BY CK. APP.
PROPERTY OF
SANDIA NATIONAL LABORATORIES
Parsons Brinckerhoff
DEVELOPED BY
Parsons Brinckerhoff Quade & Douglas, Inc.
SNL CONTRACT NO. 47-7368: CHANGES REQUIRE PRIOR APPROVAL OF THE PROCURING AGENCY
NUCLEAR WASTE REPOSITORY IN TUFF
SUBSURFACE FACILITY CONCEPTUAL DESIGN
MAXIMUM VENTILATION REQUIREMENTS
FOR EMPLACEMENT OPERATIONS
VERTICAL EMPLACEMENT
DES. KV CK. VA CK. VS
DWG. APPROVED
SIZE D
SUB.-P.I. 5/8/86 DATE
DWG. CLASS UNC
SNL SPCM 14213
PAGE NO.
SCALE 1"=500'
PB DWG. NO.-REV. SS/MV502
REV.
SNL DWG. NO. R07017
CAT.

Figure 3-32.

from the base of the tuff ramp. At that time, development operations will consist of advancing the perimeter drift around the western panels using a TBM, advancing two panel access drifts between Panels 8 and 9, mining six emplacement drifts from the two panel access drifts between Panels 7 and 8, and drilling vertical boreholes in four emplacement drifts--two in Panel 7 and two in Panel 6 (Figure 3-31). These areas are ventilated by coursing intake air for the development area from the end of the service main through the perimeter drift and back to the tuff main through the panel access drifts.

Air is supplied to the mining crews at the working face in the development area by an auxiliary fan and duct arrangement.

In each panel served by the emplacement area ventilation system, the air flows from the main drift, down the access drift, through the emplacement drift, into the midpanel drift, and to the perimeter drift. Air from the training, performance confirmation, decontamination, and shop areas is routed directly to the perimeter drift. When the emplacement of waste in a panel has been completed, the panel is sealed, using a series of bulkheads and doors. A small amount of air is allowed to "leak" through the panel to reduce heat buildup. This leakage is controlled by a series of regulators.

Figure 3-31 shows the airflow directions and quantities of intake and return air, the temperature distribution, the location of the fans for the development and emplacement areas, air pressures at the fans, pressure differentials between ventilation systems, and the ventilation controls throughout the vertical emplacement configuration at the time of maximum airflow demand in the development area. The fan requirements for this layout are shown in Table 3-17.

TABLE 3-17

MAXIMUM VENTILATION REQUIREMENTS FOR THE DEVELOPMENT AREA IN THE VERTICAL EMPLACEMENT CONFIGURATION

Ventilation System	Fan Requirements	
	Pressure (in. w.g.[a])	Airflow (cfm)[b]
Development Area	9.0	411,800[c]
Waste Emplacement Area	3.25[d]	481,300

a. Inches water gage.
b. Based on standard air density (0.075 lb/ft^3).
c. Velocity in the men-and-materials shaft for this flow is approximately 1,500 ft/min.
d. Pressure required at the collar of the waste emplacement area exhaust shaft.

3.4.2.2 Maximum Ventilation Requirements for the Waste Emplacement Area

The maximum airflow demand on the ventilation system for the waste emplacement area occurs when the emplacement area is nearly fully developed and emplacement and inspection or maintenance are occurring simultaneously. At this time, borehole drilling is the only operation in the development area. This set of conditions places the largest demands on the fans in the waste emplacement area because the air leaving the panel in which waste is being emplaced must course a great distance around the emplacement area in the perimeter drift to the waste emplacement area exhaust shaft. Airflow through the ventilation system for the waste emplacement area is determined mainly by maintaining the airflow above 45,000 cfm in routes used by the waste transporters and by controlling air leakage in the panels that have been sealed.

As shown in Figure 3-32, air leaks from the mains to the perimeter drift through the panel access and midpanel access drifts, and between the access drifts through the sealed emplacement drifts. To design a system to control that leakage, a series of ventilation analyses was performed in which the controls on each drift were varied. The controls found to be the most effective were those that directed leakage as shown in Figure 3-32. This control is accomplished (1) by placing doors at the end of the panel access drifts adjacent to the perimeter drift, (2) by placing bulkheads at the end of the midpanel access drifts adjacent to the mains, and (3) by using a combination of doors and regulators at the end of the panel access drifts adjacent to the mains and regulators at the perimeter-drift end of the midpanel access drifts.

Each emplacement drift is equipped with a door that controls airflow from the panel access drift. The ability to maintain the regulator at the end of the midpanel access drift is an operational concern because the only means of access is through the airflow downstream from the drifts in which spent fuel and high-level waste have been emplaced. Because air temperatures caused by the waste packages create unacceptable environmental conditions, it may be necessary to operate this regulator remotely and to design a special maintenance program.

Figure 3-32 shows the distribution of airflow and temperature, as well as the locations of fans for the development and emplacement areas. It also illustrates the ventilation controls required to prevent excessive leakage. Nearly 40% of the intake air for the waste emplacement area enters through the waste ramp; the remaining air enters through ES-1 and ES-2. The basic ventilation system shown for the waste emplacement area provides adequate airflows throughout the underground facility, including the airflow required to ventilate four emplacement drifts simultaneously (two at 45,000 cfm and two at 20,000 cfm) and to permit inspection, maintenance, and selected retrieval operations in one emplacement drift (in which 85,000 cfm enters the panel and 42,000 cfm reaches the emplacement drift farthest from the mains). The remaining airflow is required for the shop, training, performance assessment, and decontamination areas, as well as for maintaining a pressure differential adequate to force leakage in the correct direction through each panel.

Table 3-18 identifies the maximum ventilation requirements for the waste emplacement area in the vertical emplacement configuration.

TABLE 3-18

MAXIMUM VENTILATION REQUIREMENTS FOR THE WASTE EMPLACEMENT AREA IN THE VERTICAL EMPLACEMENT CONFIGURATION

Ventilation System	Main Fan Requirements	
	Pressure (in. w.g.[a])	Airflow (cfm)[b]
Development Area	1.50	209,400
Waste Emplacement Area	13.75[c]	837,200[d]

a. Inches water gage.
b. Based on standard air density (0.075 lb/ft^3).
c. Pressure required at the collar of the waste emplacement area exhaust shaft.
d. Velocity in the waste ventilation exhaust shaft for this flow is approximately 2,700 ft/min.

3.4.2.3 Requirements for Cooling Air

Analysis of the underground climate (temperature and humidity) (Appendix C) indicates that cooling the air for development and waste emplacement operations in the vertical configuration is unnecessary. However, after a drift has been filled with waste for a period of time, it may be necessary to cool ventilation air in order to enter the drift within a reasonable period of time. Preliminary analyses, in which an average waste thermal output was assumed, indicate that rock temperatures immediately adjacent to the drift may heat up to as high as 117°C after the waste has been emplaced for 50 yr (Appendix A).

Initial analyses of the airflow and the time needed to cool a filled drift to acceptable working conditions indicate that, for inspection purposes, 21 days of cooling will be necessary at a cooling load of 201 tons of refrigeration (RT). For maintenance purposes, 37 days of cooling at a cooling load of 201 RT will be needed. (Appendix C describes the analysis procedure.) It has been assumed in these climate studies that the emplacement drift being cooled is the farthest from the mains and that the air entering the panel is water-saturated and cooled to 10°C. The air is cooled by circulation through a heat exchanger that uses a chilled water spray. It has also been assumed that the temperatures of the surrounding rock will be those calculated for 50 yr after emplacement. At that time, the rock temperatures will be 49°C around the panel access drift and 117°C around the emplacement drift in the vertical emplacement configuration.

If it is necessary to retrieve waste before the 50-yr retrievability period has expired, the drifts must first be cooled. Because the assumptions used in the analysis represent the worst case [i.e., the drift being cooled is the greatest distance from the main and the time is 50 yr after

emplacement (Appendix C)], the amount of cooling air and the time to cool the drift are at their greatest. Therefore, for times less than 50 yr, either reduced cooling times, reduced airflows, or decreased cooling loads may be considered to obtain acceptable environmental conditions.

3.4.3 Horizontal Emplacement Configuration

The horizontal emplacement configuration (Section 3.3.2.2) is similar to the vertical emplacement configuration, except that the horizontal emplacement drifts are spaced much farther apart and no midpanel access drift is needed. The basic ventilation system for the horizontal configuration, therefore, is nearly identical to that for the vertical configuration. The key difference between the two systems is that the emplacement drifts in the horizontal configuration are twice as long as those in the vertical configuration.

3.4.3.1 Maximum Ventilation Requirements for the Development Area

As in the vertical emplacement configuration, the maximum airflow requirements for the ventilation system in the development area are expected when mining operations are farthest from the base of the tuff ramp. The mining requirements and ventilation techniques for the ventilation system in the development area in the horizontal configuration are identical to those for the vertical configuration, except that fewer emplacement drifts are mined along each panel access drift. Therefore, given the reduced mining activities, the airflow requirements in the horizontal configuration are less than those in the vertical configuration. Table 3-19 shows the airflow requirements for the development area in the horizontal configuration.

TABLE 3-19

MAXIMUM VENTILATION REQUIREMENTS FOR THE DEVELOPMENT AREA IN THE HORIZONTAL EMPLACEMENT CONFIGURATION

Ventilation System	Fan Requirements	
	Pressure (in. w.g.[a])	Airflow (cfm)[b]
Development Area	4.50	281,300
Waste Emplacement Area	4.00[c]	446,400[d]

a. Inches water gage.
b. Based on standard air density (0.075 lb/ft^3).
c. Pressure required at the collar of the waste emplacement area exhaust shaft.
d. Velocity in the men-and-materials shaft for this flow is approximately 1,400 ft/min.

The ventilation system for the waste emplacement area in this configuration is similar to that for the vertical configuration (Section 3.4.2.1). The main differences are that emplacement operations are occurring in Panels 3 and 4, and Panels 1 and 2 are sealed from continuous ventilation, except for the airflow required to maintain the correct leakage direction. As in the vertical configuration, one completed panel (ready for emplacement) separates operations in the development and emplacement areas. (Figure 3-26 gives the panel-numbering sequence.)

The airflow and temperature distributions, ventilation controls, locations of the main fans, and fan pressures are shown in Figure 3-33. The fan requirements for this layout are identified in Table 3-20.

3.4.3.2 Maximum Ventilation Requirements for the Waste Emplacement Area

The maximum airflow demand on the ventilation system of the waste emplacement area in the horizontal configuration occurs when the emplacement area is nearly fully developed and only borehole drilling operations are under way in the final panel. At this time, it is assumed that emplacement operations are in progress in Panel 16 and cooling operations are occurring in Panel 4. (Figure 3-20 gives the panel sequence.)

In each panel, the air flows from the main drift, down the access drift, through the emplacement drift, into the access drift on the far side of the panel, and from there to the perimeter drift. Air from the training, performance confirmation, decontamination, and shop areas is routed directly to the perimeter drift. When the emplacement of waste in a panel has been completed, the panel is sealed using a series of bulkheads and doors. A small amount of air is allowed to leak through the panel to reduce heat buildup. This leakage is controlled by using a series of regulators.

The primary airflow requirements for the waste emplacement area are to maintain 45,000 cfm in the transporter routes, 20,000 cfm in the standby emplacement drifts, 45,000 cfm in the emplacement drift being cooled, sufficient airflow for the shops and other support areas, and pressure differentials adequate to force leakage through the panels in the correct direction.

Figure 3-34 illustrates the expected directions and quantities of airflow throughout the underground facility, air temperatures, ventilation controls, and fan requirements. As in the vertical configuration, a significant amount of air for the waste emplacement area enters the facility through the waste ramp.

3.4.3.3 Air-Cooling Requirements

As in the vertical emplacement configuration, cooling air is not needed for development or emplacement operations, even during the summer months. The main difference between the two configurations is that it may not be necessary to cool the air before entering a drift in the horizontal configuration because waste packages are emplaced a minimum of 134 ft from the wall of the emplacement drift (Figure 4-38); therefore, the drift will take much longer to heat up over time. Preliminary analyses [based on the average waste type and thermal output (Section 3.2.1)]

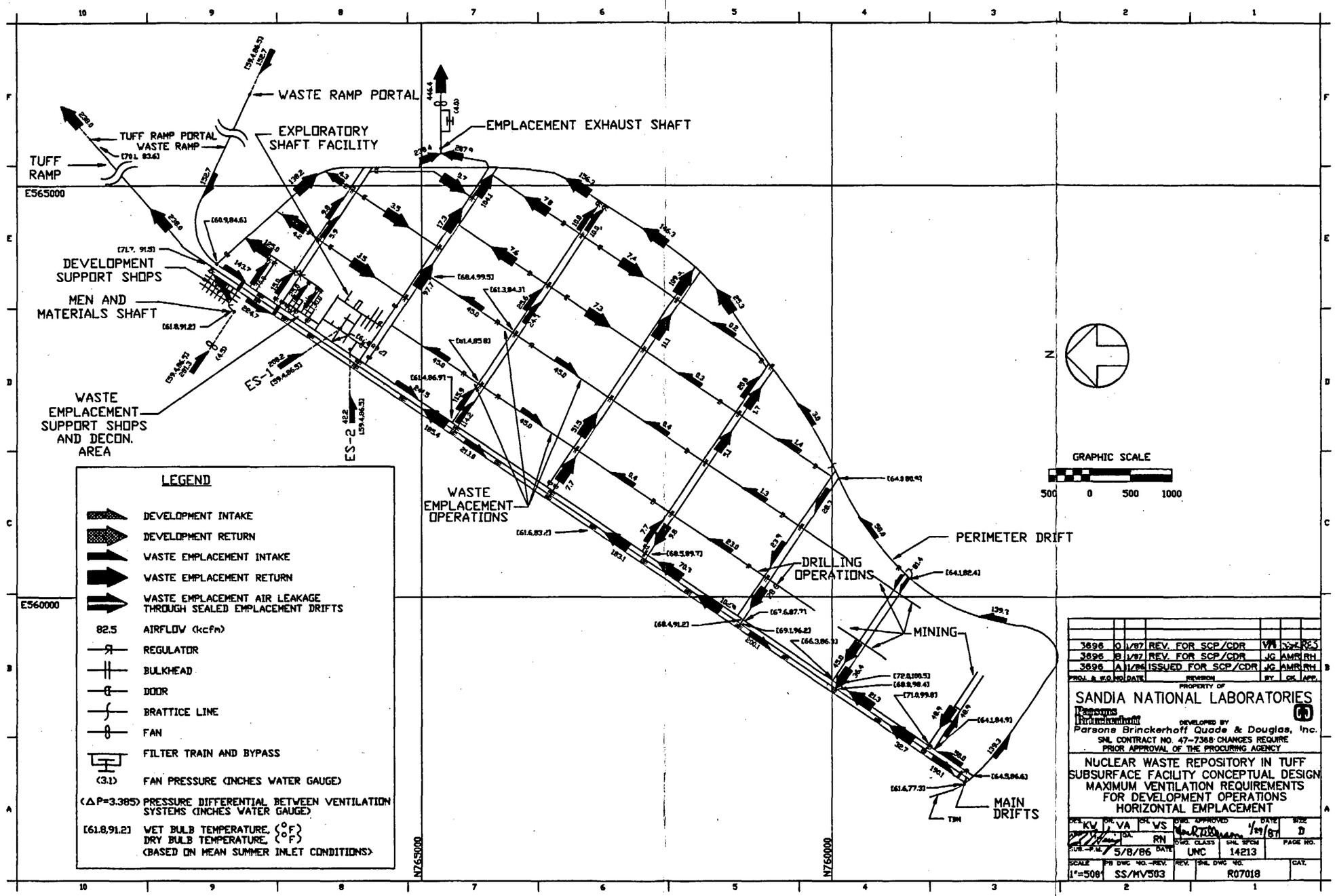
WASTE RAMP PORTAL
EMPLACEMENT EXHAUST SHAFT
TUFF RAMP PORTAL
WASTE RAMP
EXPLORATORY SHAFT FACILITY
TUFF RAMP
E565000
DEVELOPMENT SUPPORT SHOPS
MEN AND MATERIALS SHAFT
WASTE EMPLACEMENT SUPPORT SHOPS AND DECON. AREA
ES-1
ES-2
WASTE EMPLACEMENT OPERATIONS
DRILLING OPERATIONS
PERIMETER DRIFT
MINING
MAIN DRIFTS
E560000
N765000
N760000
GRAPHIC SCALE
500 0 500 1000
LEGEND
DEVELOPMENT INTAKE
DEVELOPMENT RETURN
WASTE EMPLACEMENT INTAKE
WASTE EMPLACEMENT RETURN
WASTE EMPLACEMENT AIR LEAKAGE THROUGH SEALED EMPLACEMENT DRIFTS
82.5 AIRFLOW (kcfm)
REGULATOR
BULKHEAD
DOOR
BRATTICE LINE
FAN
FILTER TRAIN AND BYPASS
(3.1) FAN PRESSURE (INCHES WATER GAUGE)
(ΔP=3.385) PRESSURE DIFFERENTIAL BETWEEN VENTILATION SYSTEMS (INCHES WATER GAUGE)
[61.8,91.2] WET BULB TEMPERATURE, (°F) DRY BULB TEMPERATURE, (°F) (BASED ON MEAN SUMMER INLET CONDITIONS)
3696 0 1/87 REV. FOR SCP/CDR
3696 B 1/87 REV. FOR SCP/CDR
3696 A 11/86 ISSUED FOR SCP/CDR
PROPERTY OF
SANDIA NATIONAL LABORATORIES
Parsons Brinckerhoff
DEVELOPED BY
Parsons Brinckerhoff Quade & Douglas, Inc.
SNL CONTRACT NO. 47-7368 CHANGES REQUIRE PRIOR APPROVAL OF THE PROCURING AGENCY
NUCLEAR WASTE REPOSITORY IN TUFF
SUBSURFACE FACILITY CONCEPTUAL DESIGN
MAXIMUM VENTILATION REQUIREMENTS
FOR DEVELOPMENT OPERATIONS
HORIZONTAL EMPLACEMENT
KV VA VS RN
5/8/86
UNC 14213
1"=500'
SS/MV503
R07018

Figure 3-33.

TABLE 3-20

MAXIMUM VENTILATION REQUIREMENTS FOR THE WASTE EMPLACEMENT AREA IN THE HORIZONTAL EMPLACEMENT CONFIGURATION

Ventilation System	Main Fan Requirements	
	Pressure (in. w.g.[a])	Airflow (cfm)[b]
Development Area	1.00	117,200
Waste Emplacement Area	5.00[c]	517,200[d]

a. Inches water gage.
b. Based on standard air density (0.075 lb/ft^3).
c. Pressure required at the collar of the waste emplacement area exhaust shaft.
d. Velocity in the men-and-materials shaft for this flow is approximately 1,650 ft/min.

indicate that, 50 yr after emplacement, the rock mass at the wall of the emplacement drift may heat up to 53°C and, at the wall of the panel access drift, to 48°C. These temperatures are not uncommon in some mines around the world. Therefore, depending on maintenance and inspection schedules, the passage of ambient air through the drifts may be adequate for cooling purposes.

Two analyses were performed for the horizontal configuration--one considered the time required to cool a drift for inspection and maintenance using ambient air, and the second considered using water-saturated air cooled to a temperature of 10°C. The results of these analyses are shown in Table 3-21. The assumptions made in the cooling analyses for the vertical configuration (Section 3.4.2.3) apply here, except that the surrounding rock temperatures are different in the horizontal configuration.

The conclusions from the analyses indicate that, for inspection purposes, there is only a 9-day difference in cooling times between the case using ambient air and that using cooled air. However, for routine maintenance, 70 days of cooling time is required when ambient air is used, compared with 11 days when the air has been cooled to 10°C. Depending on maintenance schedules, cooling of the air in more than one panel may be required if ambient air is routinely used. It appears that using ambient air and possibly ventilating more emplacement drifts is more cost-effective than using a chilled-water cooling facility. A more detailed maintenance schedule is needed before this evaluation can be made.

3.4.4 Comparison of the Ventilation and Cooling Systems for the Vertical and Horizontal Emplacement Configurations

The airflows needed for both ventilation systems were based primarily on the need to dilute diesel exhaust fumes, on engine heat loads, on

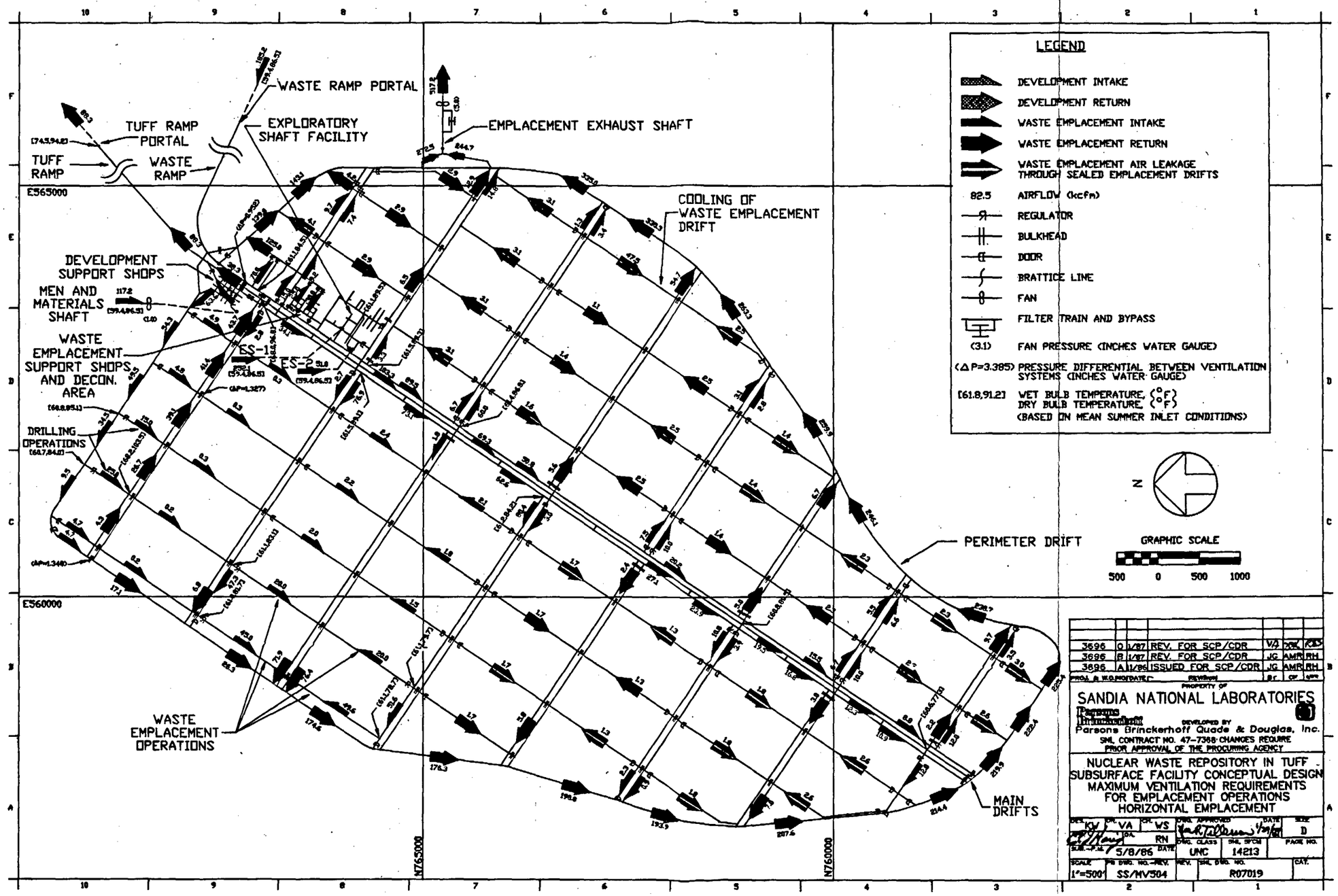
WASTE RAMP PORTAL
TUFF RAMP PORTAL
TUFF RAMP
WASTE RAMP
EXPLORATORY SHAFT FACILITY
EMPLACEMENT EXHAUST SHAFT
COOLING OF WASTE EMPLACEMENT DRIFT
DEVELOPMENT SUPPORT SHOPS
MEN AND MATERIALS SHAFT
WASTE EMPLACEMENT SUPPORT SHOPS AND DECON. AREA
DRILLING OPERATIONS
WASTE EMPLACEMENT OPERATIONS
PERIMETER DRIFT
MAIN DRIFTS
ES-1
ES-2
E565000
E560000
N765000
N760000
LEGEND
DEVELOPMENT INTAKE
DEVELOPMENT RETURN
WASTE EMPLACEMENT INTAKE
WASTE EMPLACEMENT RETURN
WASTE EMPLACEMENT AIR LEAKAGE THROUGH SEALED EMPLACEMENT DRIFTS
82.5 AIRFLOW (kcfm)
REGULATOR
BULKHEAD
DOOR
BRATTICE LINE
FAN
FILTER TRAIN AND BYPASS
(3.1) FAN PRESSURE (INCHES WATER GAUGE)
(ΔP=3.385) PRESSURE DIFFERENTIAL BETWEEN VENTILATION SYSTEMS (INCHES WATER GAUGE)
[61.8,91.2] WET BULB TEMPERATURE, °F DRY BULB TEMPERATURE, °F (BASED ON MEAN SUMMER INLET CONDITIONS)
N
GRAPHIC SCALE
500 0 500 1000
3696 D 1/87 REV. FOR SCP/CDR
3696 B 1/87 REV. FOR SCP/CDR
3696 A 11/86 ISSUED FOR SCP/CDR
PROPERTY OF
SANDIA NATIONAL LABORATORIES
Parsons Brinckerhoff
DEVELOPED BY
Parsons Brinckerhoff Quade & Douglas, Inc.
SNL CONTRACT NO. 47-7368 CHANGES REQUIRE PRIOR APPROVAL OF THE PROCURING AGENCY
NUCLEAR WASTE REPOSITORY IN TUFF
SUBSURFACE FACILITY CONCEPTUAL DESIGN
MAXIMUM VENTILATION REQUIREMENTS
FOR EMPLACEMENT OPERATIONS
HORIZONTAL EMPLACEMENT
5/8/86
UNC
14213
1"=500'
SS/HV504
R07019

Figure 3-34.

TABLE 3-21

COOLING ANALYSIS FOR THE EMPLACMENT DRIFTS IN THE HORIZONTAL CONFIGURATION

Reason for Reentry	Ambient Air	Cooled Air
Inspection[a]		
Time to Cool (days)	14	5
Cooling Load (RT[b])	0	139
Maintenance and Partial Retrieval[c]		
Time to Cool (days)	70	11
Cooling Load (RT)	0	139

a. Environmental criteria for inspection: air cooling power $\geq$300 W/m^2, dry bulb $\leq$45°C.
b. RT = tons of refrigeration.
c. Environmental criteria for maintenance and for partial retrieval: air cooling power $\geq$500 W/m^2, dry bulb $\leq$40°C.

minimum statutory requirements for airflow, and on shop demands. The airflows needed for both emplacement configurations are shown in Table 3-22. Computed airflow velocities at various underground locations were compared with the maximum velocity constraints shown in Table 3-23. The velocity constraints were derived primarily from dust abatement needs, fan-operating costs, and comfort considerations.

TABLE 3-22

AIRFLOW REQUIREMENTS FOR THE VERTICAL AND HORIZONTAL EMPLACEMENT CONFIGURATIONS

Area	Vertical (1,000 cfm)	Horizontal (1,000 cfm)
Development Shop	85	50
Drilling Operations	20	20
Perimeter Drift	40	40
Development Area	100	80
Access Drifts	50	50
Transporter Route	45	45
Training Area	45	45
Performance Confirmation Area	25	25
Emplacement Area Shop	55	55

TABLE 3-23

CONSTRAINTS ON MAXIMUM VELOCITY

Area	Maximum Velocities* (ft/min)
Intake Shafts (unobstructed)	4,000
Return Shafts (unobstructed)	4,000
Waste Ramp	1,500
Tuff Ramp	1,500
Men-and-Materials Shaft	2,300
Perimeter Drift	2,000
Mains	1,500
Main Return Drifts	1,500
Haulage Airways (no conveyor)	1,200
Haulage Airways (conveyor--homotropal)	1,000
Haulage Airways (conveyor--antitropal)	800
Emplacement Drifts	1,500
Development Areas	600

*Maximum shaft velocities are based on the assumption that the shafts are dry and unobstructed.

Given the naturally low temperature of the rock at Yucca Mountain, it is not expected that the air will have to be cooled in the ventilation system for the development area because the heat from waste packages is expected to have little effect on this system.

Acceptable environmental conditions are taken as an air-cooling power (Mitchell and Whillier, 1972) greater than 500 W/m^2 and a dry-bulb temperature less than 40°C in areas where mining, drilling, maintenance, or retrieval of waste are occurring. Conditions that permit inspection of drifts containing emplaced waste are defined as an air-cooling power greater than 300 W/m^2 and a dry-bulb temperature less than 45°C. Dry-bulb temperature is a governing criterion because of the dry atmospheric conditions expected at the repository site. The climate data used for this study are the mean summer conditions at the NTS (Eglinton and Dreicer, 1984).

The climatic conditions used for the cooling analyses are

- dry-bulb temperature of 30.3°C,
- wet-bulb temperature of 15.2°C, and
- atmospheric pressure of 26.0 in. Hg (at an elevation of 3,924 ft above sea level).

Based on the descriptions of the ventilation systems presented in Sections 3.4.2 and 3.4.3, the horizontal configuration is more easily ventilated and cooled than the vertical configuration. The ventilation system for the horizontal configuration has the following advantages over that for the vertical configuration.

- There are fewer mined drifts in the development area, which results in substantially lower airflows in the development area and in reduced operating costs.

- Less leakage occurs in a panel during emplacement, caretaking, and cooling operations, thereby reducing ventilation requirements in the waste emplacement area.

- Smaller shop areas result in lower airflow requirements.

The fan requirements for both configurations are compared in Table 3-24.

TABLE 3-24

COMPARISON OF AIRFLOWS AND FAN PRESSURES

	Ventilation System in the Development Area		Ventilation System in the Emplacement Area	
Configuration	Airflow (cfm)[a]	Pressure (in. w.g.[b])	Airflow (cfm)[a]	Pressure (in. w.g.[b])
Vertical	411,800	9.0	837,200	13.75[c]
Horizontal	281,300	4.5	517,200	5.00[c]

a. Based on standard air density (0.075 lb/ft^3).
b. Inches water gage.
c. Pressure required at the collar of waste emplacement area exhaust shaft.

Table 3-25 compares the pressure differentials across selected double doors and bulkheads that separate the two ventilation systems for all four scenarios analyzed. As shown in Table 3-25, the vertical emplacement configuration has a higher pressure differential across these doors and bulkheads than that in the horizontal case, with the result that greater leakage occurs between the two ventilation systems; however, these pressures do not exceed the differences in pressure that exist in numerous mining operations.

The cooling times and capacities needed before a drift can be entered for inspection and maintenance purposes are compared in Table 3-26. The table indicates that shorter cooling times and lower cooling capacities are needed in the horizontal emplacement configuration. In this configuration, the emplacement drifts are much cooler because the standoff distance between the heat-emitting packages and the drift is greater than that in the vertical configuration and there is less leakage in a panel, permitting better control of airflow.

TABLE 3-25

PRESSURE DIFFERENTIALS ACROSS THE DOUBLE DOORS AND BULKHEADS SEPARATING THE TWO VENTILATION SYSTEMS FOR THE VENTILATION MODELS ANALYZED[a]

Maximum Airflow Model	Differential Pressure for the Vertical Configuration (in. w.g.)[b]	Differential Pressure for the Horizontal Configuration (in. w.g.)[b]	Comments
Development Area	3.90	2.07	Permanent bulkheads and doors in crosscuts between the tuff and waste mains; pressure differential measured from the ramp down the mains.
	3.94	2.10	
	3.97	2.12	
	4.16	2.31	
	4.45	2.75	
	4.63	2.85	
	4.81	2.96	Temporary bulkhead in the waste main.
	4.81	4.45	Permanent bulkheads in crosscuts between panel access drifts; pressure differential measured from the mains to the perimeter drift.
	5.14	4.45	
	5.14	4.45	
	5.14	4.45	
	5.24	4.45	Temporary bulkhead in the perimeter drift.
	3.39	1.35	Temporary bulkhead in the perimeter drift.
Waste Emplacement Area	3.32	1.34	Permanent bulkheads and doors in crosscuts between panel access drifts; pressure differential measured from the perimeter to the mains.
	3.31	1.34	
	3.21	1.34	
		1.33	
		1.32	
	2.78	1.11	Temporary bulkheads in the service and tuff mains.
	2.78	1.11	
	2.54	0.96	Permanent bulkheads in crosscuts between waste and tuff mains.
	2.55	0.95	
	9.50	3.82	Temporary bulkheads in the perimeter drift.

a. Details are provided in Appendix C.
b. Inches water gage.

TABLE 3-26

COMPARISON OF THE VENTILATION NEEDED TO COOL A DRIFT 50 YR AFTER WASTE EMPLACEMENT FOR THE VERTICAL AND HORIZONTAL WASTE EMPLACEMENT CONFIGURATIONS

	Ventilation Needed for Inspection Purposes (ACP $\geq$300 W/m^2, DB $\leq$45°C)				Airflow Needed for Maintenance or Partial Retrieval (ACP $\geq$500 W/m^2, DB $\leq$40°C)			
	Ambient Air Temperature		Cooled Air Temperature		Ambient Air Temperature		Cooled Air Temperature	
Emplacement Method	Time to Cool (Days)	Cooling Load (RT)	Time to Cool (Days)	Cooling Load (RT)	Time to Cool (Days)	Cooling Load (RT)	Time to Cool (Days)	Cooling Load (RT)
Vertical	168	0	21	201	>560	0	37	201
Horizontal	14	0	5	139	70	0	11	139

REFERENCES FOR CHAPTER 3

Barton, N., R. Lien, and J. Lunde, "Engineering Classification of Rock Masses for the Design of Tunnel Support," Rock Mechanics, Vol. 6, No. 4, Springer-Verlag, New York, NY, 1974.

Dennis, A. W., P. D. O'Brien, R. Mulkin, and J. C. Frostenson, "NNWSI Repository Operational Procedures for Receiving, Packaging, Emplacing, and Retrieving High-Level and Transuranic Waste," SAND83-1166, Sandia National Laboratories, Albuquerque, NM, May 1984a.

Dennis, A. W., J. C. Frostenson, and K. J. Hong, "NNWSI Repository Worker Radiation Exposure," Volume I, "Spent Fuel and High-Level Waste Operations in a Geologic Repository in Tuff," SAND83-7436/1, Sandia National Laboratories, Albuquerque, NM, May 1984b.

DOE (U.S. Department of Energy), "Generic Requirements for a Mined Geologic Disposal System," DOE/NE/44301-1, Office of Civilian Radioactive Waste Management, Washington, D.C., September 1984.

DOE (U.S. Department of Energy), "Mission Plan for the Civilian Radioactive Waste Management Program," DOE/RW-0005, Office of Civilian Radioactive Waste Management, Washington, D.C., June 1985.

DOE (U.S. Department of Energy), "Generic Requirements for a Mined Geologic Disposal System," Appendix D, "Department of Energy Position on Retrievability and Retrieval for a Geologic Repository," OGR/B-2, DOE RW-0090, Office of Civilian Radioactive Waste Management, Washington, D.C., June 1986.

DOE (U.S. Department of Energy), "Draft Mission Plan Amendment," DOE/RW-0128, Office of Civilian Radioactive Waste Management, Washington, D.C., January 1987.

DOE (U.S. Department of Energy), "Site Characterization Plan, Yucca Mountain Site, Nevada Research and Development Area, Nevada," Office of Civilian Radioactive Waste Management, Washington, D.C., in preparation.

DOL (U.S. Department of Labor), "Safety and Health Standards--Underground Metal and Nonmetal Mines," Code of Federal Regulations, Mineral Resources, Title 30, Part 57, Washington, D.C., July 1985.

Dravo Engineers, Inc., "Effect of Variations in the Geologic Data Base on Mining at Yucca Mountain for NNWSI," SAND84-7125, prepared for Sandia National Laboratories, Albuquerque, NM, December 1984.

Eglinton, T. W., and R. J. Dreicer, "Meteorological Design Parameters for the Candidate Site of a Radioactive-Waste Repository at Yucca Mountain, Nevada," SAND84-0440/2, Sandia National Laboratories, Albuquerque, NM, December 1984.

Flores, R. J., "Retrievability: Strategy for Compliance Demonstration," SAND84-2242, Sandia National Laboratories, Albuquerque, NM, January 1986.

Johnstone, J. K., R. R. Peters, and P. F. Gnirk, "Unit Evaluation at Yucca Mountain, Nevada Test Site: Summary Report and Recommendation," SAND83-0372, Sandia National Laboratories, Albuquerque, NM, June 1984.

Langkopf, B. S., and P. F. Gnirk, "Rock-Mass Classification of Candidate Repository Units at Yucca Mountain, Nye County, Nevada," SAND82-2034, Sandia National Laboratories, Albuquerque, NM, February 1986.

Mitchell, D., and A. Whillier, "Cooling Power of Underground Environments," Journal of the Mine Ventilation Society of South Africa, Vol. 25, No. 8, pp. 140-151, August 1972.

NRC (U.S. Nuclear Regulatory Commission), "Disposal of High-Level Radioactive Wastes in Geologic Repositories," Code of Federal Regulations, Energy, Title 10, Part 60, Washington, D.C., January 1986.

NWPA (Nuclear Waste Policy Act of 1982), Public Law 97-425, 96 Stat. 2201, 42 USC 10101, Washington, D.C., January 1983.

O'Brien, P. D., "Reference Nuclear Waste Descriptions for a Geologic Repository at Yucca Mountain, Nevada," SAND84-1848, Sandia National Laboratories, Albuquerque, NM, September 1985.

Sperry, P. E., "River Mountains Tunnel," Proc. of Second Symposium on Rapid Excavation, H. L. Hartman, ed., Sacramento, CA, 1969.

Stein, R., "Issues, Issue Resolution Strategy, and Design Information for the SCP," Memorandum to S. Mann, L. Olson, D. Vieth, and J. Neff, U.S. Department of Energy, March 24, 1986.

Stein, R., "SCP Use of January 1987 Waste Acceptance Schedule," Memorandum to D. Vieth, J. Neff, and J. Anttonen, U.S. Department of Energy, April 10, 1987.

Stinebaugh, R. E., and J. C. Frostenson, "Disposal of Radioactive Waste Packages in Vertical Boreholes--A Description of the Operations and Equipment for Emplacement and Retrieval," SAND84-1010, Sandia National Laboratories, Albuquerque, NM, December 1986.

Stinebaugh, R. E., I. B. White, and J. C. Frostenson, "Disposal of Radioactive Waste Packages in Horizontal Boreholes--A Description of the Operations and Equipment for Emplacement and Retrieval," SAND84-2640, Sandia National Laboratories, Albuquerque, NM, December 1986.

The Robbins Company, "Final Report--Repository Drilled Hole Methods Study," SAND83-7085, prepared for Sandia National Laboratories, Albuquerque, NM, July 1984a.

The Robbins Company, "Small Diameter Horizontal Hole Drilling--State of Technology," SAND84-7103, prepared for Sandia National Laboratories, Albuquerque, NM, November 1984b.

The Robbins Company, "Feasibility Studies and Conceptual Design for Placing Steel Liner in Long, Horizontal Boreholes for a Prospective Nuclear Waste Repository in Tuff," SAND84-7209, prepared for Sandia National Laboratories, Albuquerque, NM, July 1985.

The Robbins Company, "Design of a Machine to Bore and Line a Long Horizontal Hole in Tuff," SAND86-7004, prepared for Sandia National Laboratories, Albuquerque, NM, 1987.

Townes, G. A., W. L. Godfrey, and K. J. Anderson, "Nevada Nuclear Waste Storage Investigations Projects: Spent-Fuel Consolidation System," SAND84-7130, prepared by BE Inc., for Sandia National Laboratories, Albuquerque, NM, 1987a.

Townes, G. A., W. L. Godfrey, and K. J. Anderson, "Conceptual Design of Facilities for Unloading Radioactive Waste from Shipping Casks," SAND85-7102, prepared by BE Inc., for Sandia National Laboratories, Albuquerque, NM, 1987b.

DISTRIBUTION LIST

B. C. Rusche (RW-1)
Director
Office of Civilian Radioactive
Waste Management
U.S. Department of Energy
Forrestal Building
Washington, DC 20585

Ralph Stein (RW-23)
Office of Civilian Radioactive
Waste Management
U.S. Department of Energy
Forrestal Building
Washington, DC 20585

M. W. Frei (RW-231) (2)
Office of Civilian Radioactive
Waste Management
U.S. Department of Energy
Forrestal Building
Washington, DC 20585

M. P. Kunich, Director (4)
Waste Management Project Office
U.S. Department of Energy
Post Office Box 98518
Las Vegas, NV 89193-8518

J. Youngblood
Acting Chief, Operations Branch
Division of Waste Management
U. S. Nuclear Regulatory Commission
Washington, D.C. 20555

R. Ballard, Chief
Technical Review Branch
Division of Waste Management
U.S. Nuclear Regulatory Commission
Washington, D.C. 20555

J. O. Neff, Manager
Salt Repository Project Office
U.S. Department of Energy
110 North 25 Mile Avenue
Hereford, TX 79045

B. G. Gale (RW-223)
Office of Civilian Radioactive
Waste Management
U.S. Department of Energy
Forrestal Building
Washington, DC 20585

R. W. Gale (RW-40)
Office of Civilian Radioactive
Waste Management
U.S. Department of Energy
Forrestal Building
Washington, D.C. 20585

V. J. Cassella (RW-222)
Office of Civilian Radioactive
Waste Management
U.S. Department of Energy
Forrestal Building
Washington, DC 20585

S. A. Mann, Manager
Crystalline Rock Project Office
U.S. Department of Energy
9800 South Cass Avenue
Argonne, IL 60439

K. Street, Jr.
Lawrence Livermore National
Laboratory
Post Office Box 808
Mail Stop L-209
Livermore, CA 94550

L. D. Ramspott (2)
Technical Project Officer for NNWSI
Lawrence Livermore National
Laboratory
P.O. Box 808
Mail Stop L-204
Livermore, CA 94550

Document Control Center
Division of Waste Management
U.S. Nuclear Regulatory Commission
Washington, D.C. 20555

V. M. Glanzman
U.S. Geological Survey
Post Office Box 25046
421 Federal Center
Denver, CO 80225

P. T. Prestholt
NRC Site Representative
1050 East Flamingo Road
Suite 319
Las Vegas, NV 89109

M. E. Spaeth
Technical Project Officer for NNWSI
Science Applications
International Corporation
Suite 407
101 Convention Center Drive
Las Vegas, NV 89109

SAIC-T&MSS Library (2)
Science Applications
International Corporation
Suite 407
101 Convention Center Drive
Las Vegas, NV 89109

W. S. Twenhofel, Consultant
Science Applications
International Corp.
820 Estes Street
Lakewood, CO 89215

A. E. Gurrola
General Manager
Energy Support Division
Holmes & Narver, Inc.
Mail Stop 580
Post Office Box 93838
Las Vegas, NV 89193-3838

D. T. Oakley (2)
Technical Project Officer for NNWSI
Los Alamos National Laboratory
N-5, Mail Stop J521
P.O. Box 1663
Los Alamos, NM 87545

L. R. Hayes (2)
Technical Project Officer for NNWSI
U.S. Geological Survey
Post Office Box 25046
421 Federal Center
Denver, CO 80225

C. H. Johnson, Technical
Program Manager
Nuclear Waste Project Office
State of Nevada
Evergreen Center, Suite 252
1802 North Carson Street
Carson City, NV 89701

ONWI Library
Battelle Columbus Laboratory
Office of Nuclear Waste Isolation
505 King Avenue
Columbus, OH 43201

W. M. Hewitt, Program Manager
Roy F. Weston, Inc.
955 L'Enfant Plaza, Southwest, Suite 800
Washington, DC 20024

H. D. Cunningham
General Manager
Reynolds Electrical &
Engineering Co., Inc.
Post Office Box 14400
Mail Stop 555
Las Vegas, NV 89114

T. Hay, Executive Assistant
Office of the Governor
State of Nevada
Capitol Complex
Carson City, NV 89710

J. A. Cross, Manager
Las Vegas Branch
Fenix & Scisson, Inc.
Mail Stop 514
Post Office Box 93265
Las Vegas, NV 89193-3265

John Fordham
Desert Research Institute
Water Resources Center
Post Office Box 60220
Reno, NV 89506

Department of Comprehensive
Planning
Clark County
225 Bridger Avenue, 7th Floor
Las Vegas, NV 89155

Lincoln County Commission
Lincoln County
Post Office Box 90
Pioche, NV 89043

Community Planning and
Development
City of North Las Vegas
Post Office Box 4086
North Las Vegas, NV 89030

City Manager
City of Henderson
Henderson, NV 89015

Timothy G. Barbour
Science Applications
International Corporation
1626 Cole Boulevard, Suite 270
Golden, CO 80401

E. P. Binnall
Field Systems Group Leader
Building 50B/4235
Lawrence Berkeley Laboratory
Berkeley, CA 94720

R. R. Loux, Jr., Executive Director (3)
Nuclear Waste Project Office
State of Nevada
Evergreen Center, Suite 252
1802 North Carson Street
Carson City, NV 89701

Dr. Martin Mifflin
Desert Research Institute
Water Resources Center
Suite 1
2505 Chandler Avenue
Las Vegas, NV 89120

Planning Department
Nye County
Post Office Box 153
Tonopah, NV 89049

Economic Development
Department
City of Las Vegas
400 East Stewart Avenue
Las Vegas, NV 89101

Director of Community
Planning
City of Boulder City
Post Office Box 367
Boulder City, NV 89005

Commission of the
European Communities
200 Rue de la Loi
B-1049 Brussels
BELGIUM

Technical Information Center
Roy F. Weston, Inc.
955 L'Enfant Plaza, Southwest, Suite 800
Washington, DC 20024

Gerald Parker (RW-241)
Office of Civilian Radioactive
Waste Management
U.S. Department of Energy
Forrestal Building
Washington, DC 20585

T. H. Isaacs (RW-21)
Office of Civilian Radioactive
Waste Management
U.S. Department of Energy
Forrestal Building
Washington, DC 20585

B. J. King, Librarian (2)
Basalt Waste Isolation Project
Library
Rockwell Hanford Operations
Post Office Box 800
Richland, WA 99352

D. L. Fraser, General Manager
Reynolds Electrical & Engineering
Co., Inc.
Mail Stop 555
Post Office Box 98521
Las Vegas, NV 89193-8521

Eric Anderson
Mountain West Research-Southwest, Inc.
398 South Mill Avenue, Suite 300
Tempe, AZ 85281

Judy Foremaster (5)
City of Caliente
Post Office Box 158
Caliente, NV 89008

J. P. Pedalino
Technical Project Officer for NNWSI
Holmes & Narver, Inc.
101 Convention Center Drive,
Suite 860
Las Vegas, NV 89109

J. P. Knight (RW-24)
Office of Civilian Radioactive
Waste Management
U.S. Department of Energy
Forrestal Building
Washington, DC 20585

J. R. Rollo
Deputy Assistant Director
for Engineering Geology
U.S. Geological Survey
106 National Center
12201 Sunrise Valley Drive
Reston, VA 22092

Vincent Gong
Technical Project Officer for NNWSI
Reynolds Electrical & Engineering
Co., Inc.
Mail Stop 615
Post Office Box 98521
Las Vegas, NV 89193-8521

S. H. Kale (RW-20)
Office of Civilian Radioactive
Waste Management
U.S. Department of Energy
Forrestal Building
Washington, DC 20585

J. H. Anttonen, Assistant Manager
for Commercial Nuclear Waste
Basalt Waste Isolation Project
Office
U. S. Department of Energy
P.O. Box 550
Richland, WA 99352

J. C. Bresee (RW-22)
Office of Civilian Radioactive
Waste Management
U.S. Department of Energy
Forrestal Building
Washington, DC 20585

J. L. Fogg (12)
Technical Information Office
Nevada Operations Office
U.S. Department of Energy
P.O. Box 98518
Las Vegas, NV 89193-8518

R. L. Bullock
Technical Project Officer for NNWSI
Fenix & Scisson, Inc.
Mail Stop 514
P.O. Box 93265
Las Vegas, NV 89193-3265

Robert A. Bellman, Jr.
Science Applications International
Corporation
3349 So. Highland Drive
Suite 403
Las Vegas, Nevada 89109

C. E. Kay (RW-2)
Office of Civilian Radioactive
Waste Management
U. S. Department of Energy
Forrestal Building
Washington, DC 20585

R. Hilley (RW-30)
Office of Civilian Radioactive
Waste Management
U. S. Department of Energy
Forrestal Building
Washington, DC 20585

C. P. Gertz (4)
Program Manager
Waste Management Project Office
Nevada Operations Office
U. S. Department of Energy
P.O. Box 98518
Las Vegas, NV 89293-8518

C. L. West, Acting Director
Office of External Affairs
Nevada Operations Office
U.S. Department of Energy
P.O. Box 98518
Las Vegas, NV 89193-8518

P. K. Fitzsimmons, Director
Health Physics and Environmental
Division
Nevada Operations Office
U.S. Department of Energy
P.O. Box 98518
Las Vegas, NV 89193-8518

Prof. S. W. Dickson
Department of Geological Sciences
Mackay School of Mines
University of Nevada, Reno
Reno, Nevada 89557

Mark P. Board
ITASCA Consulting Group
1313 Fifth Street, SE
Minneapolis, MN 55414

N. Del Gobbo (RW-221)
Office of Civilian Radioactive
Waste Management
U. S. Department of Energy
Forrestal Building
Washington, DC 20585

J. L. Ash, Repository Design
Manager (2)
Roy F. Weston, Inc.
955 L'Enfant Plaza, Southwest
Suite 800
Washington, DC 20024

D. H. Alexander (RW-232)
Office of Civilian Radioactive
Waste Management
U. S. Department of Energy
Forrestal Building
Washington, DC 20585

L. Jardine
Project Manager
Bechtel National, Inc.
P.O. Box 3965
San Francisco, CA 94119

D. Harig
Project Manager
Parsons Brinckerhoff Quade &
Douglas, Inc.
1625 Van Ness Avenue
San Francisco, CA 94109-3678

6300 R. W. Lynch
6310 T. O. Hunter (5)
6310 100/12413/SAND84-2641/Q3

6310 NNWSICF
6311 A. L. Stevens
6311 H. MacDougall
6311 C. Mora
6311 V. Hinkel (3)
6312 F. W. Bingham
6313 T. E. Blejwas
6313 B. M. Schwartz
6313 R. M. Zimmerman (5)
6314 J. R. Tillerson
6315 S. Sinnock
6316 R. B. Pope
6332 WMT Library (65)
6430 N. R. Ortiz
3141 S. A. Landenberger (5)
3151 W. L. Garner (3)
8024 P. W. Dean
3154-3 C. H. Dalin (28)
for DOE/OSTI

LATA L. Scully
LATA R. Seylar
LATA H. Wheeler
LATA B. Barnett

☆ U.S. GOVERNMENT PRINTING OFFICE: 1987—573-049/61019

Sandia National Laboratories