1225

not in LL
not in ML

CONTRACTOR REPORT

SAND83–7069
Unlimited Release
UC–70

Same question applies 10/31/85

Preliminary Stability Analysis for the Exploratory Shaft

William Hustrulid
Mining Engineering Consultant
28599 Buchanan Drive
Evergreen, CO 80439

Prepared by Sandia National Laboratories Albuquerque, New Mexico 87185 and Livermore, California 94550 for the United States Department of Energy under Contract DE-AC04-76DP00789

Printed December 1984

Distribution
Category UC-70

SAND83-7069

Unlimited Release
Printed December 1984

PRELIMINARY STABILITY ANALYSIS FOR THE EXPLORATORY SHAFT AT YUCCA MOUNTAIN, NEVADA

by

William Hustrulid

for

Sandia National Laboratories
P.O. Box 5800
Albuquerque, New Mexico 87185

Under Sandia Contract: 50-1555

Sandia Contract Monitor
G. Kenton Beall
Geotechnical Design Division

Abstract

This report gives the results of a preliminary stability analysis for the proposed Exploratory Shaft at Yucca Mountain, Nevada. This work was accomplished between April 1982 and October 1982 and incorporates the data, program goals, and design concepts of that period. These guiding factors may be different than those of the publishing date and may therefore produce different results than would be produced now. The analysis includes investigation of geotechnical features, in situ stress states, and presence of faults in order to make a preliminary determination of shaft lining requirements. It was found that only portions of the shaft wall that have joints would require bolting and mesh reinforcement before lining, but the level of expected activity at the shaft bottom may necessitate more extensive reinforcement. A shaft lining thickness of 12 in. of 5,000-psi concrete should be very adequate for the proposed shaft.

TABLE OF CONTENTS

	Page
Abstract	1
1.0 Introduction	1
1.1 Purpose and Justification	1
2.0 Problem Definition	3
2.1 Shaft Geotechnical Features	3
2.2 Shaft In Situ Stress State	6
2.3 Shaft Faults	6
2.4 Shaft Lining Requirements	9
3.0 Technical Approach	11
3.1 Shaft Geotechnical Features	11
3.2 Shaft In Situ Stress State	12
3.3 Shaft Faults	26
3.4 Shaft Lining Requirements	28
4.0 Results of Investigation	35
5.0 Recommendations and Conclusions	37
6.0 References	39

LIST OF TABLES

Table No.	Title	Page
1	Depth of Major Formations	3
2	Dips of the Faults Along the East-West Section (C-C')	9
3	Failure Relationships Derived from Uniaxial Compressive Strength Tests on the Calico Hills Formation	17
4	Cases Studied Using Boundary Element Simulation	20
5	Summary of Mt. Taylor Data	30

LIST OF FIGURES

Figure No.	Title	Page
1	Preliminary Geotechnical Log From Hole G-4 (Depth 0 - 1,000 ft)	4
2	Preliminary Geotechnical Log From Hole G-4 (Depth 1,000 - 1,900 ft)	5
3	Minimum Horizontal Stress as a Function of Depth (Hole G-1)	7
4	East-West Cross Section, C-C'	8
5	Summary of Joints for Hole G-1	13
6	The Expected Horizontal Stress Field as a Function of Gravity Loading	14
7	Relationship Between Maximum and Minimum Horizontal Stresses	15
8	Strength of the Calico Hills Formation	18
9	Mesh Used in the Boundary Element Simulations	19
10	Boundary Element Simulation For Cases 1 and 2	21
11	Boundary Element Simulation For Case 3	22
12	Boundary Element Simulation For Case 4	23
13	Boundary Element Simulation For Case 5	24
14	Boundary Element Simulation For Case 6	25
15	Diagrammatic Representation of the Stresses Acting on a Plane Oriented at an Angle to the Principal Planes	27
16	Safety Factor Against Sliding as a Function of Fault Dip Angle and Coefficient of Friction	29
17	Measured Lining Pressures at the Mt. Taylor Shaft	31
18	Safety Factor as a Function of Lining Thickness and Concrete Strength	33

1.0 INTRODUCTION

1.1 Purpose and Justification

The work described in this report was performed for Sandia National Laboratories (SNL) as a part of the Nevada Nuclear Waste Storage Investigations (NNWSI) project. Sandia is one of the principal organizations participating in the project, which is managed by the US Department of Energy's (DOE) Nevada Operations Office. The project is a part of the DOE's program to safely dispose of the radioactive waste from nuclear power plants.

The DOE has determined that the safest and most feasible method currently known to dispose of such wastes is by storing them in mined geologic repositories. The NNWSI project is conducting detailed studies of an area on and near the Nevada Test Site (NTS) in southern Nevada to determine the feasibility of developing a repository.

This report presents the results of a preliminary stability analysis for the proposed Exploratory Shaft (ES) at Yucca Mountain, Nevada. This shaft, which is to be conventionally sunk and concrete lined, will have a finished inside diameter of 12 ft and a nominal depth of 1,600 ft. It will pass through the Topopah Spring Member and bottom out in the Calico Hills formation. This investigation includes determination of factors that have an impact on the stability of the shaft--geotechnical features, in situ stress states, and faults--and the shaft lining requirements. The recommended shaft lining of 12-in. minimum thickness and 5,000 psi concrete is evaluated. This report is not intended to be a detailed lining design but could serve as input for such a design.

2.0 PROBLEM DEFINITION

2.1 Shaft Geotechnical Features

A number of holes have been cored in the vicinity of the proposed shaft. The most recent hole, G-4, is within 300 ft of the actual proposed shaft location. The United States Geological Survey (USGS) is responsible for the detailed description and logging of the core. At the time this report was prepared, only the notes from the field logging of the core were available, and the information in the logs shown in Figures 1 and 2 was presented strictly for the purpose of identifying potential geotechnical problems. When the actual G-4 logs become available from the USGS (Spengler et al., 1981), the data may vary from that presented in these figures.

The depths below surface at which the major formations occur are summarized in Table 1.

Table 1

DEPTH OF MAJOR FORMATIONS

Formation	Depth Below Surface (ft)
Topopah Spring	240
Calico Hills	1,420
Prow Pass	1,780

The major portion of the excavation for the shaft (1,600 ft) will be in the Topopah Spring formation. The bottom of the shaft will be in the Calico Hills formation. The depth of the static water table is expected to be about 1,880 ft; all workings are above this level. The lithophysal zone, which is comprised of tuff with hollow, bubble-like voids or filled-void structures that are found in certain volcanic rocks, extends from a depth of 420 to 1,000 ft. An examination of this zone, as it appears in similar cores, indicates that it presents no particular problem to construction. Some zones had very poor core recovery. This is thought to be caused by zones with lithophysae of a size comparable to the core diameter and by poor coring technique. These

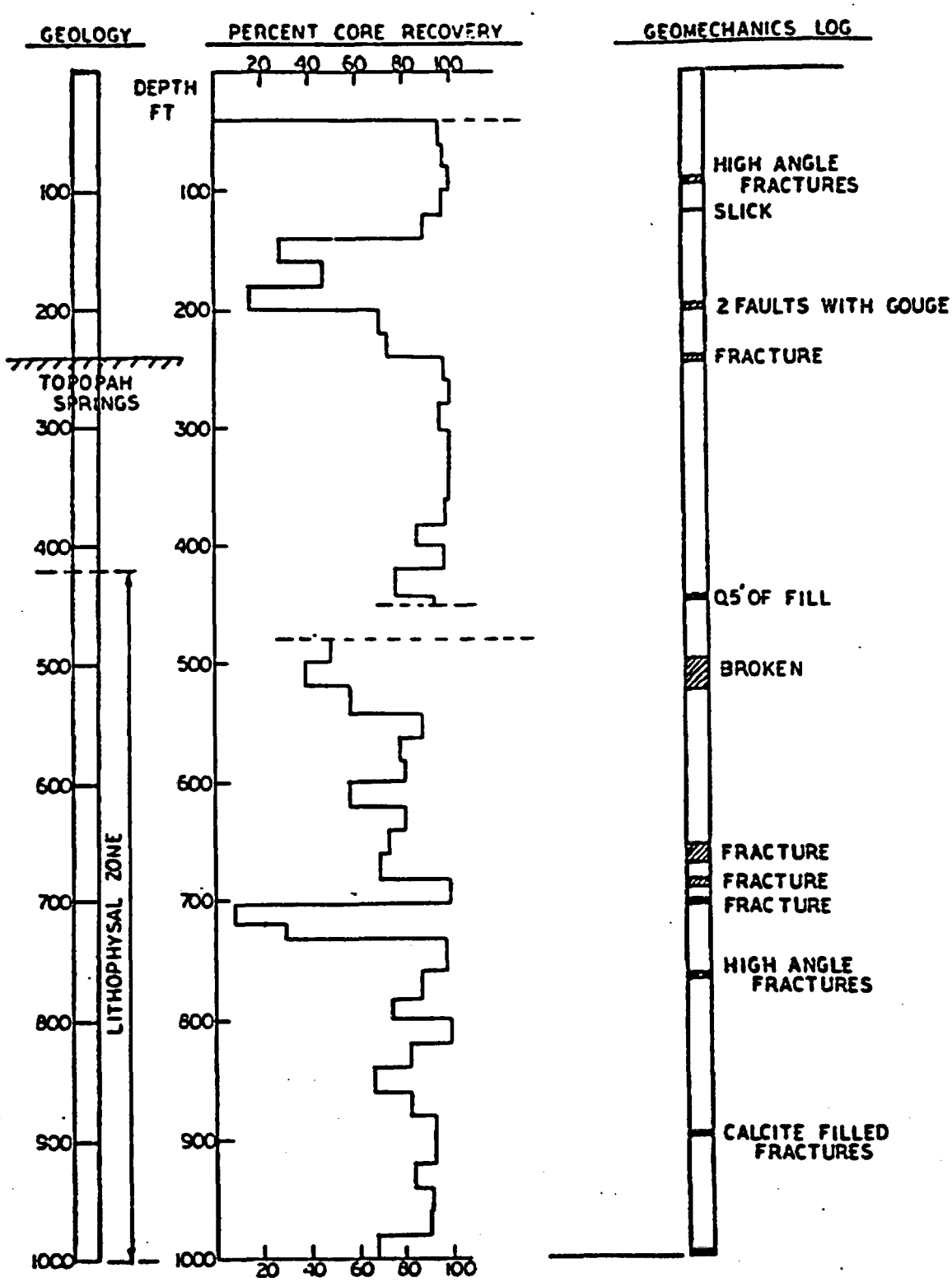

Figure 1. Preliminary Geotechnical Log From Hole G-4 (Depth 0 - 1,000 ft)

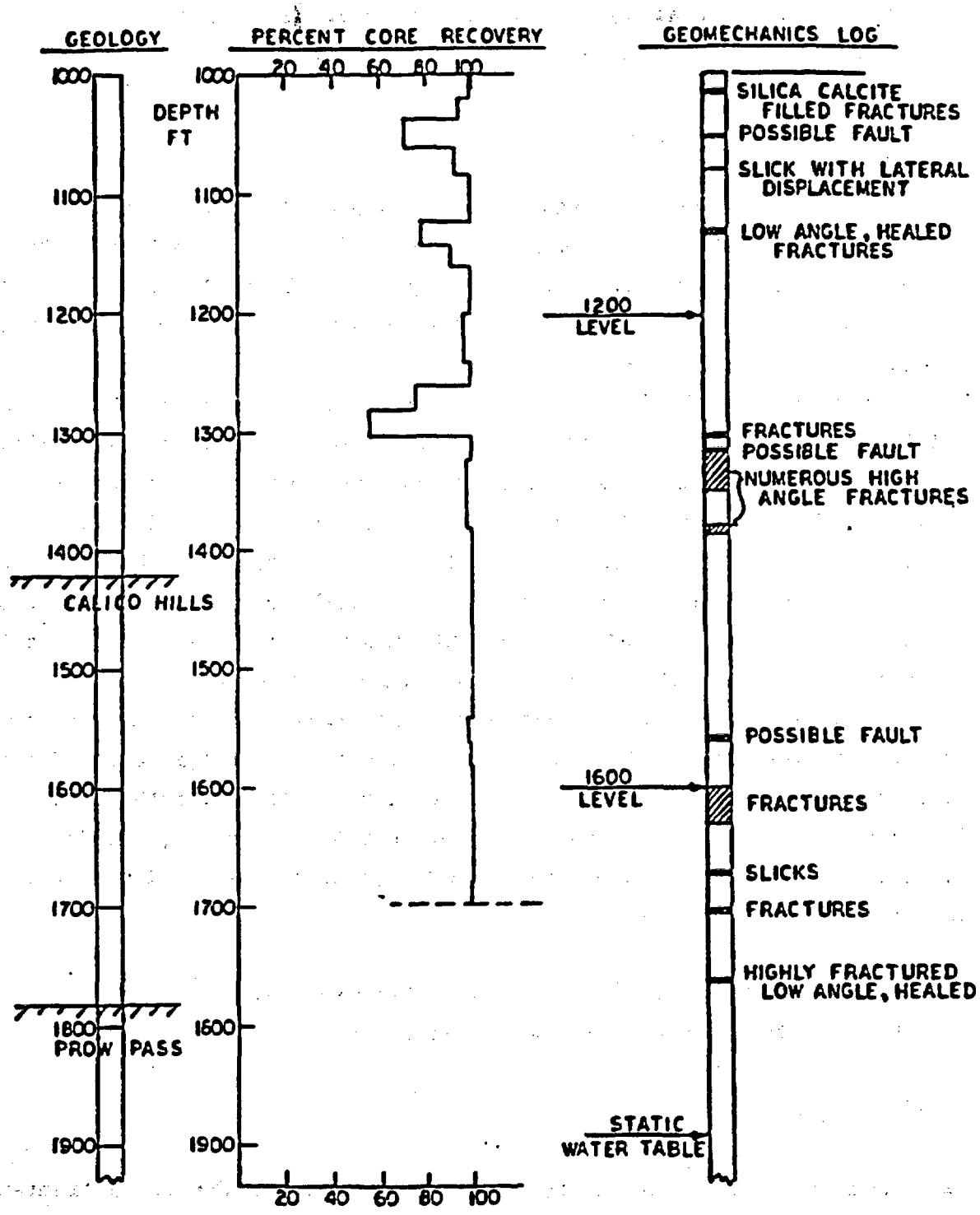

Figure 2. Preliminary Geotechnical Log From Hole G-4 (Depth 1,000 - 1,900 ft)

conclusions are arrived at by examining the core. The poor core recovery should not therefore reflect in construction problems.

2.2 Shaft In Situ Stress State

In order to evaluate shaft stability and lining design, it is important to establish the in situ stress state in terms of stress magnitudes, stress ratios, and stress directions. Due to the paucity of available information scale factors have been used to reduce laboratory strength values to those which might be expected in the field.

Hydrofracing data from Hole G-1 have been interpreted by Zoback and Hustrulid as reported by Haimson (1983) to determine minimum and maximum horizontal stress magnitudes. The magnitude of the minimum horizontal stress, σ_H (min), which is equal to the shut-in pressures, is plotted as a function of depth in Figure 3. All of the measurements for this plot were made below the bottom elevation of the proposed shaft and below the level of the static water table. In order to use this information in the design, it is necessary to extend the data to cover the depth range of 0 to 1,600 ft.

The approximation of the maximum horizontal stress from the hydrofracing data is a more difficult problem since it requires a knowledge of the formation tensile strength and the pore pressure. The tensile strength was calculated using the first and second formation breakdown pressures (Bredehoeft, 1976). The two approximations of the formation pore pressure during hydraulic fracturing were used. They are

- that induced by a water column extending to the surface, and
- that due to a water column extending to the static water table.

2.3 Shaft Faults

A number of high-angle faults have been mapped in the Yucca Mountain areas. On the east-west cross section, C-C', 12 faults have been projected (Figure 4). The dips, as measured from the cross section and given in Table 2, range from 76° to 84° from the horizontal. The log of Hole G-4 (Figures 1 and 2), shows the possibility of encountering fault zones near the BS during shaft sinking. A wedge of rock will appear in the shaft wall near these

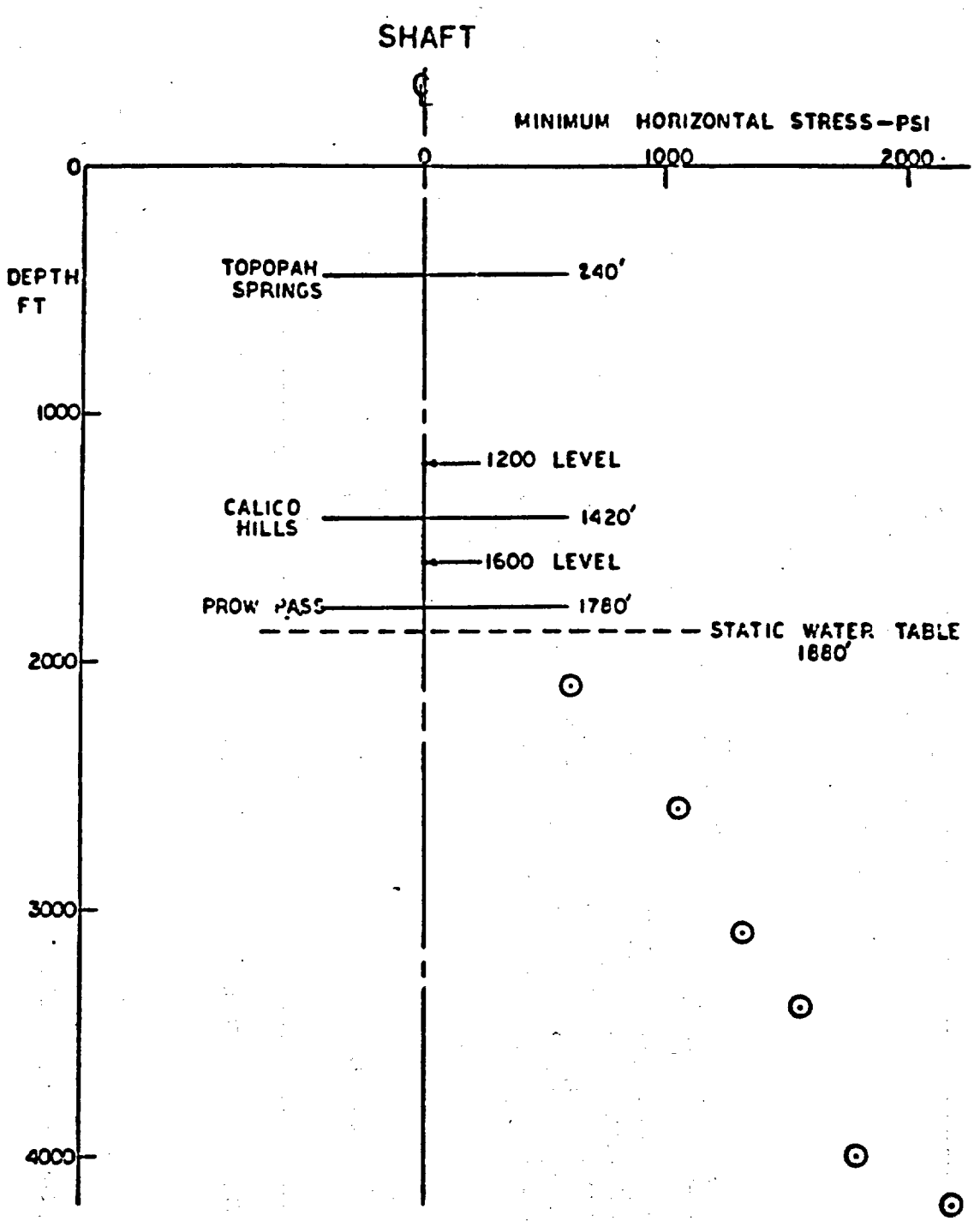

Figure 3. Minimum Horizontal Stress as a Function of Depth (Hole G-1)

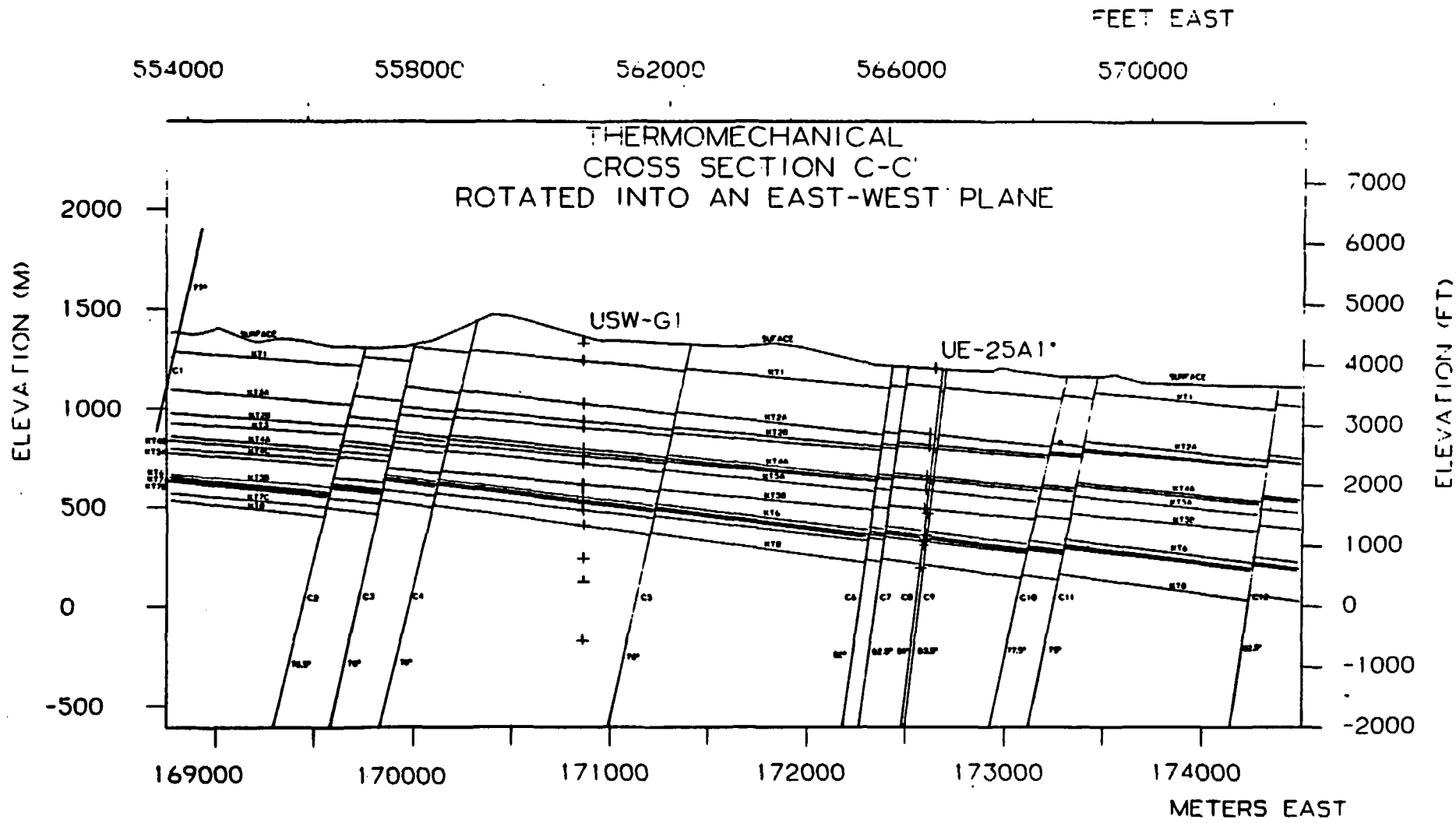

DATE: JUNE 28,1982

+ =THERMOMECHANICAL PICKS

* BOTTOM 5 CROSSHAIRS UNDER THE HEADING OF UE-25A1 ARE THERMO-MECHANICAL PICKS FROM UE-25B1 HTH.

Figure 4. East-West Cross Section, C-C'

Table 2

DIPS OF THE FAULTS ALONG THE EAST-WEST SECTION (C-C')

Fault	Dip From Horizontal (degrees)
C1	77.0
C2	76.5
C3	78.0
C4	76.0
C5	78.0
C6	82.0
C7	82.5
C8	84.0
C9	83.5
C10	77.5
C11	79.0
C12	82.5

high-angle fault zones. In the Topopah Spring Member, these fault zones, together with the joint sets, will provide another plane for block slipping, which could cause shaft construction problems should the block slip.

2.4 Shaft Lining Requirements

There are a number of different approaches that have been used in the past to estimate shaft lining requirements. Some of these approaches have been outlined in a background paper (Hustrulid, 1982). The application of these approaches requires knowledge of the cohesion (c) and angle of internal friction (ϕ) or, alternately, the unconfined compressive strength (σ_c) and passive pressure coefficient [$\tan \beta = (1 + \sin \phi)/(1 - \sin \phi)$]. The required values for the Topopah Spring and Calico Hills formations are not presently available, nor is it expected that they will become available before shaft sinking. Therefore, data from the Mt. Taylor Mine (Abel et al., 1979) have been analyzed to determine shaft lining requirements.

An estimate of the magnitude and uniformity of the pressure that would be applied to the periphery of the shaft is also necessary in determining the thickness of concrete lining required and the strength of the concrete.

3.0 TECHNICAL APPROACH

3.1 Shaft Geotechnical Features

Depths of core losses and of intense jointing have been carefully measured from data collected from Holes G-1 and G-4. The percent core recovery for Hole G-4 was calculated from the USGS field logs in ±20-ft sections. The results (Figure 1) indicate that the percent of core recovery was generally high although there are a few zones where the percent of core recovery was significantly less than that of the adjacent rock. Significant core loss (Spengler et al., 1981) was observed at the following depths:

- 150 - 200 ft,
- 480 - 520 ft,
- 700 - 730 ft, and
- 1,250 - 1,300 ft.

The loss in core can be attributed to various factors, such as drilling problems, rather than the natural structure of the rocks. Rock Quality Designation (RQD) values are not provided because calculation of these values requires a distinction between natural and mechanical fractures (data missing from the log).

The structural logs from Hole G-1 have been reviewed (Spengler et al., 1981) for additional information for preliminary estimates of stability. The average number of joints for each 10-ft interval in the Topopah Spring formation from Hole USW G-1 is 2.2, and from Hole U-25A the number is 4.5. For Hole USW G-1, the greatest number of fractures (the logs do not specify exactly how many) per 10-ft interval occurs in the same formation at the following depths:

- 290 - 310 ft,
- 430 - 440 ft,
- 520 - 600 ft,
- 680 - 810 ft, and
- 1,190 - 1,350 ft.

The depths of most intense jointing in Hole G-1 are of the same general order of magnitude as the depths of higher core losses in Hole G-4. Only five joints were noted in the approximately 375 ft of Calico Hills intersected by Hole G-1, and those were located at the top and base of the formation. The

characteristics of the joints for the Topopah Spring Member and Calico Hills formations for Hole G-1 are summarized in Figure 5. A majority (54%) of the fractures in the Topopah Spring Member are high angle, 70° to 90° (from horizontal). About 29% of the fractures are low angle, 0° to 30°, and the remainder of the fractures range from 30° to 70°.

3.2 Shaft In Situ Stress State

Minimum and maximum horizontal stresses have been calculated to determine shaft stability. If it is assumed that the vertical stress is due to the weight of the overburden and that a gravitational model is appropriate for in situ stress calculation, the predicted minimum horizontal stress can be calculated for different values of Poisson's ratio (ν) as

$$\sigma_h = \frac{\nu}{(1 - \nu)} (\sigma_v). \tag{1}$$

This relationship assumes elasticity and no tectonism of rocks. The results of these calculations are presented in Figure 6. (The kink in the curves in Figure 6 is due to the pore pressure contribution.) The data appear to be best described by the curve for $\nu = 0.25$. This value of Poisson's ratio is similar to that obtained from laboratory property tests conducted on small samples. [Additional in situ stress measurements are presently being conducted and analyzed. As new data become available, this interpretation ($\nu = 0.25$) should be re-examined. This suggests that $\sigma_h = 1/3\ \sigma$.] Minimum horizontal stresses were calculated as in Equation 1.

The relationship between the maximum and minimum horizontal stresses is shown in Figure 7. When pore pressure is induced by a water column extending to the static water table, the ratio of maximum to minimum horizontal stress appears to vary with depth. It is not clear how the stress ratio analysis should be extended to the shaft depth range. Based on stress measurements made at NTS and discussions with SNL personnel, for the purpose of analysis, it will be assumed that the horizontal stress ratio varies from 1 to 2. It is quite possible that the best fit line in Figure 7 will extend all the way to the surface. Large horizontal stresses near the surface are quite common. It is also possible that the curve will change dramatically with decreasing depth

STRATIGRAPHIC UNIT	TOPOPAH SPRING MEMBER	TUFFACEOUS BEDS OF CALICO HILLS
INTERVAL (FEET)	292-1425.5	1425.5-1801.5
PERCENT OF JOINTS PER 10° INCREMENT	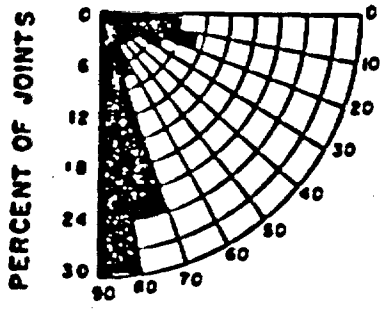	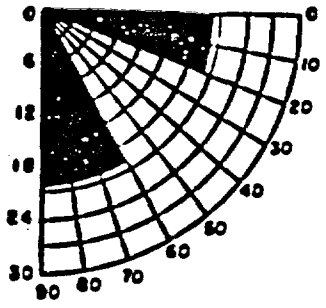
NUMBER OF MEASURED JOINTS	262	5
PERCENT OF TOTAL JOINTS	49.6	1.0
AVERAGE NUMBER OF JOINTS PER 10-FOOT INTERVAL	2.3	0.1
TYPES AND PERCENT OF FRACTURE FILLINGS	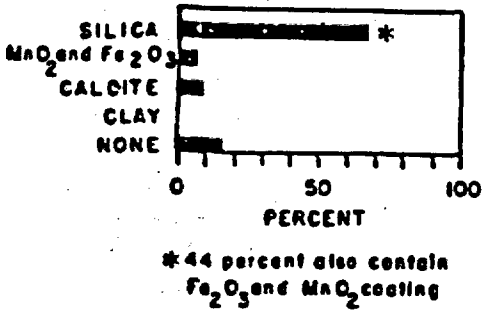	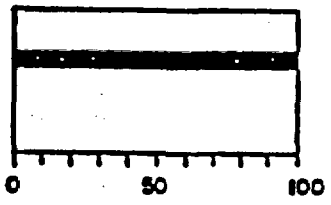
NUMBER OF EXAMINED FRACTURES	251	3
PERCENT OF "HEALED" FRACTURES	19.5	100

Figure 5. Summary of Joints for Hole G-1 (Spengler et al., 1981)

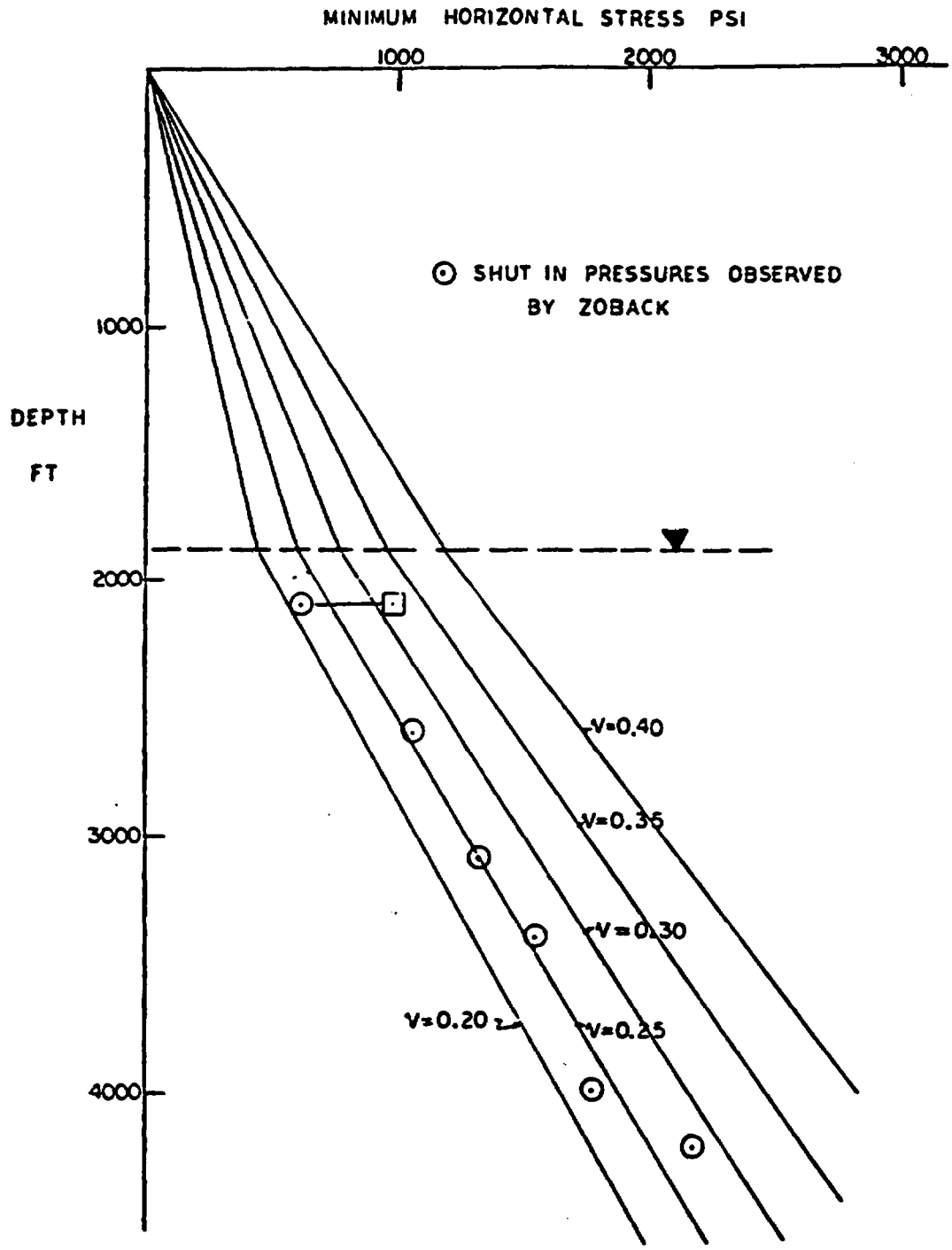

Figure 6. The Expected Horizontal Stress Field as a Function of Gravity Loading

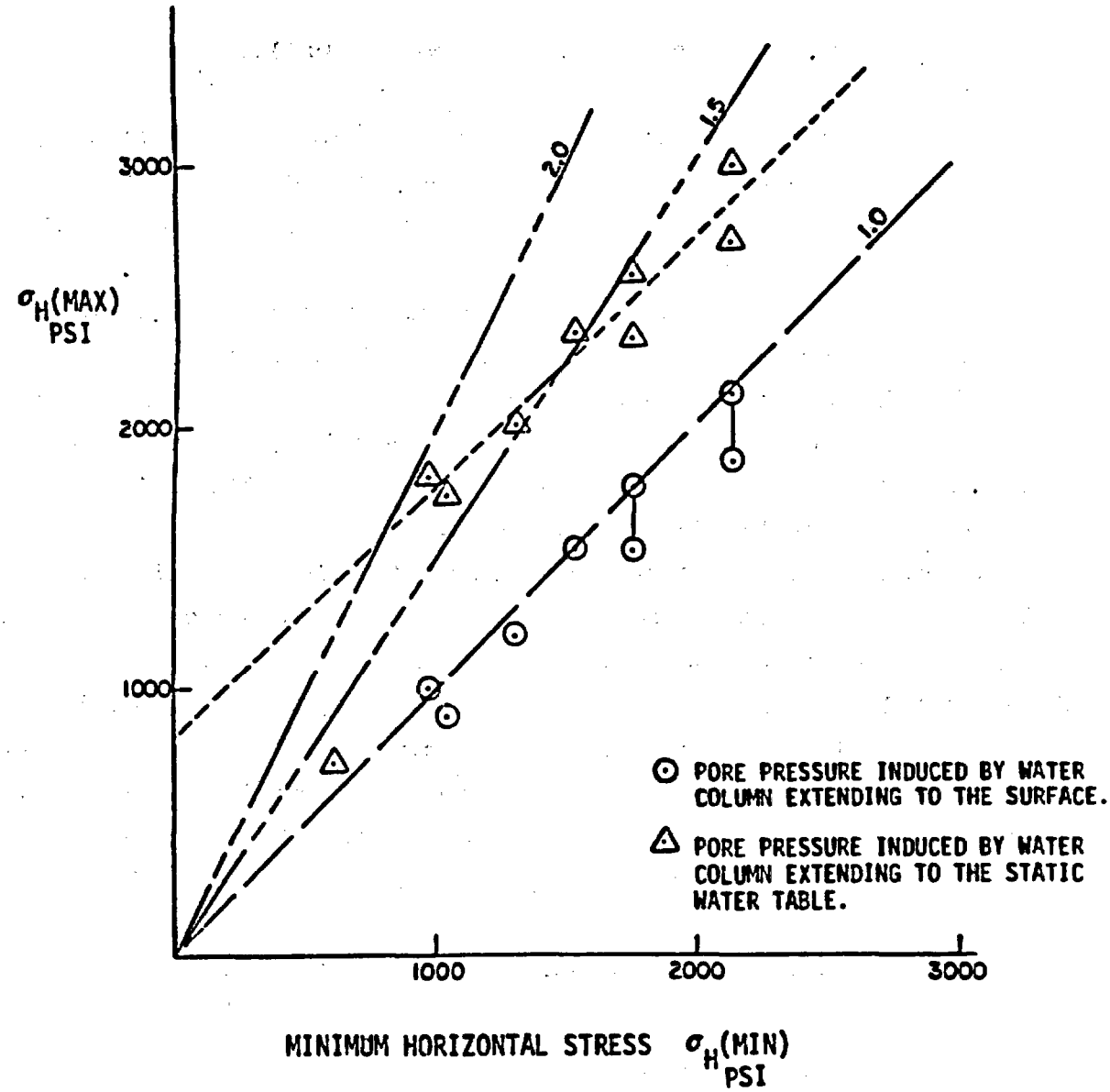

$$\sigma_H\,(\max) = 3\,\sigma_H\,(\min) - P_p + T - P_b$$

where

P_p = pore pressure

T = tensile strength of the formation

P_b = formation breakdown pressure

$\sigma_H\,(\max)$ = maximum principal horizontal stress

$\sigma_H\,(\min)$ = minimum principal horizontal stress

Figure 7. Relationship Between Maximum and Minimum Horizontal Stresses

because the effect of the tectonic component is lost as the distance is increased above the surface base level of Yucca Mountain and less of this component can be transmitted upward. In addition, if there is a topographic effect, it also might decrease with decreasing depth. This complicates the analysis somewhat because of the changing stress ratio with depth and it might become even greater than 2.

If there is a difference in the maximum horizontal stresses, the directions of the principal maximum and minimum horizontal stresses must be determined for the purpose of calculating factors of safety. Televiewer studies conducted in Hole G-1 suggest that a preferred direction of fractures is N 15° E. Until better information becomes available, this will be used as the direction of the maximum horizontal stress.

Laboratory strength tests were performed on intact samples prepared from drill cores to determine rock strength (Tillerson, personal communication, 1981). Of particular importance are the results obtained from samples taken from the Calico Hills formation because that formation is approximately five times weaker than the Topopah Spring formation and occurs at the greatest depth in the shaft. Assuming the designed thickness for the lining will not vary with depth of the shaft, the most severe lining stresses would be expected to occur at the greatest depth in the Calico Hills. If

σ_v is the stress due to the weight of the overburden,

σ_v is calculated as $\sigma_v = \frac{\gamma H}{144}$

where

γ = average weight density of overlying strata (lb/ft^3),
H = depth below surface, and
144 = conversion factor for ft^2 to $in.^2$

In addition, as suggested by Figure 6 ($\nu = 0.25$),

σ_H (min) = 1/3 σ_v and
σ_H (max) = (1 → 2) σ_H (min) (Figure 7).

It is assumed that failed regions do not "change" the stress field observed from the initial circular opening.

The most likely compressive (shear) failure can occur in the vertical plane from the radial and vertical stresses (horizontal stress ratio = 1) and in the horizontal plane from radial and horizontal stresses (horizontal stress ratio = 2).

Laboratory tests performed on intact samples of the Calico Hills formation provided the failure relationships shown in Table 3.

Scoping studies were conducted using the following procedures:

- the geometry of the boundary-element mesh was produced;
- the horizontal stresses were superimposed onto the boundary mesh;
- stress concentrations were estimated from the geometry of the hole in the plate;
- the stresses (from the concentrations) were compared to the failure conditions; and
- "failure" was assumed to occur where the stresses exceeded rock strength.

The scoping studies used the properties, as measured in experiments on dry samples (Figure 8), in a boundary element analysis, which, in this case, analyzes the stresses around a circular opening, by replacing the solid with a finite network of discrete elements (mesh, shown in Figure 9). An iteration technique is used to calculate average stresses and displacements in each element. The scoping studies are calculations using various input values

Table 3

FAILURE RELATIONSHIPS DERIVED FROM UNIAXIAL COMPRESSIVE STRENGTH TESTS ON THE CALICO HILLS FORMATION (Tillerson, 1981)

Dry Samples	Wet Samples
$\sigma_1 = 4553 + 2.47\ \sigma_3$	$\sigma_1 = 3496 + 1.47\ \sigma_3$

σ_1 = maximum principal stress (psi)
σ_3 = minor principal stress (psi)

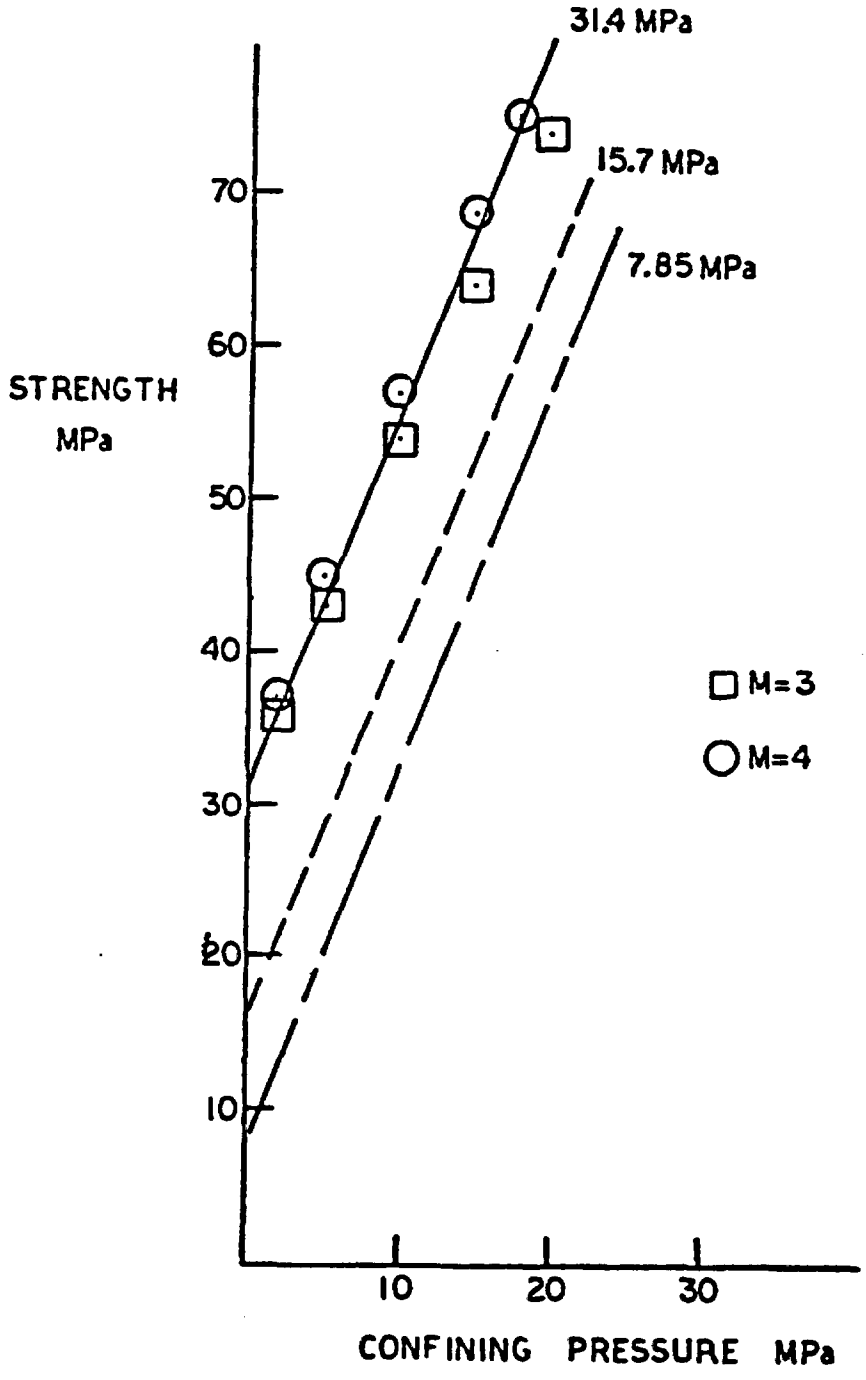

Figure 8. Strength of the Calico Hills Formation. M is a material constant which is a curve fitting parameter.

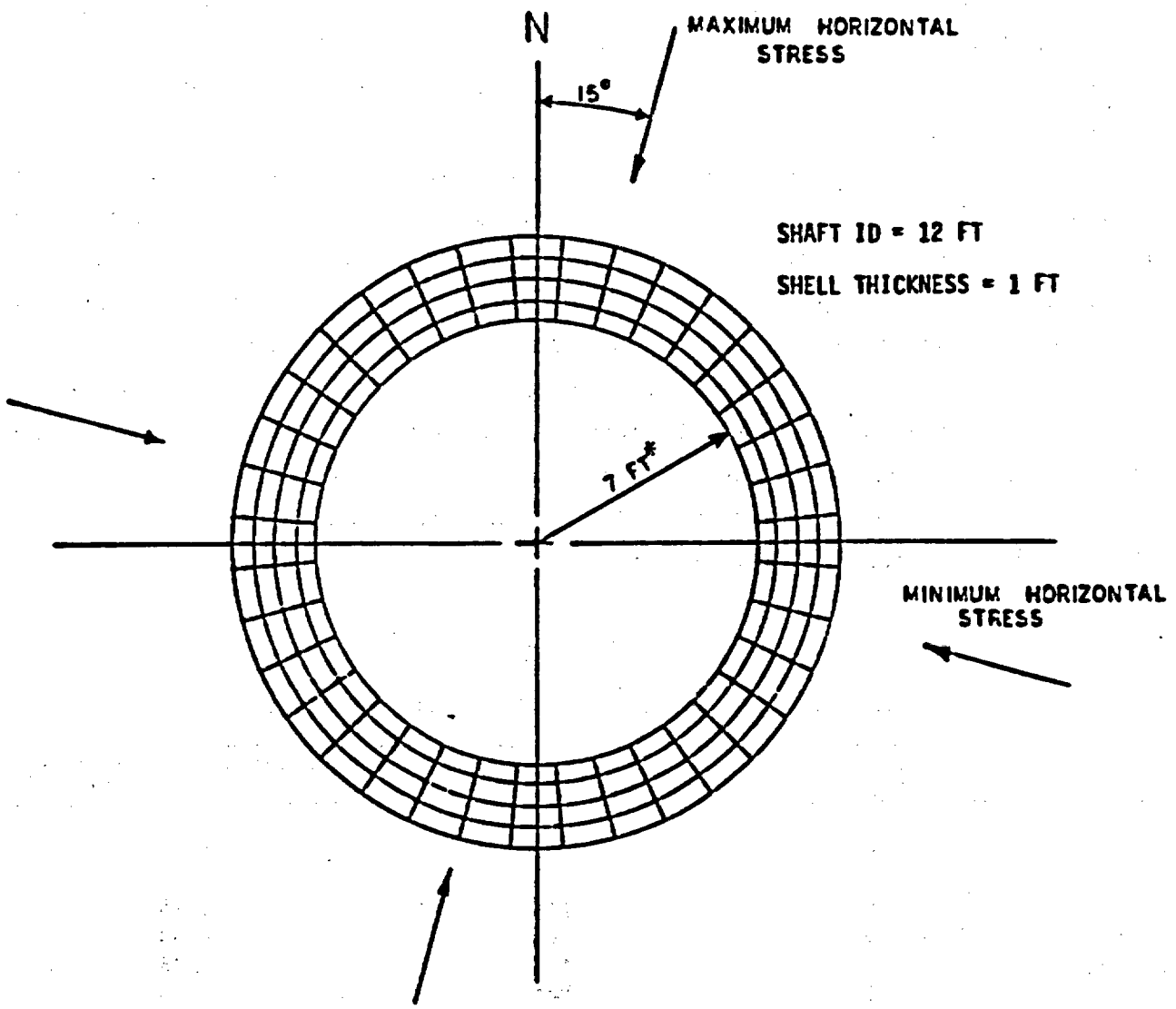

*Includes 6-ft-radius shaft plus 1-ft-thick concrete liner.

Figure 9. Mesh Used in the Boundary Element Simulations

for unconfined compressive strength and horizontal strength ratio (as in Table 4) to examine sensitivity and provide estimates that are representative of a wide range of possibilities. Properties of dry rock were chosen because the proposed repository lies above the water table. It was assumed that the rock mass properties could be approximated by a reduction in the unconfined compressive strength measured in the laboratory (Duvall, 1977). Laboratory compressive strengths were converted to field values using reduction factors of 1, 2, and 4 (Duvall, 1977) for horizontal stress ratios of 1 and 2. The cases studied are presented in Table 4, and the results are shown in Figures 10 through 14.

For Cases 1, 2, and 4 no failure of the rock around the shaft is indicated. For Case 3 in which the horizontal stresses are equal to 725 psi and the unconfined compressive strength of the rock mass is one-fourth that observed for small samples tested in the laboratory, the failed zone extends a maximum distance of about 1 ft. For Cases 5 and 6 in which the principal horizontal stresses are unequal and the unconfined strength is, respectively, one-half and one-fourth that obtained in the laboratory, the corresponding maximum failure zone depths are 2 and 4 ft, as can be seen. For Cases 5 and 6, the failure zone is thickest at 90° to the direction of the maximum principal horizontal stress, as expected.

Table 4

CASES STUDIED USING BOUNDARY ELEMENT SIMULATION

Case	Horizontal Stress Ratio	Minimum Horizontal Stress (psi)	Unconfined Compressive Strength (psi)
1a	1	725	4553
2b	1	725	2276
3c	1	725	1138
4a	2	725	4553
5b	2	725	2276
6c	2	725	1138

a This case incorporated reduction factor 1.

b This case incorporated reduction factor 2.

c This case incorporated reduction factor 4.

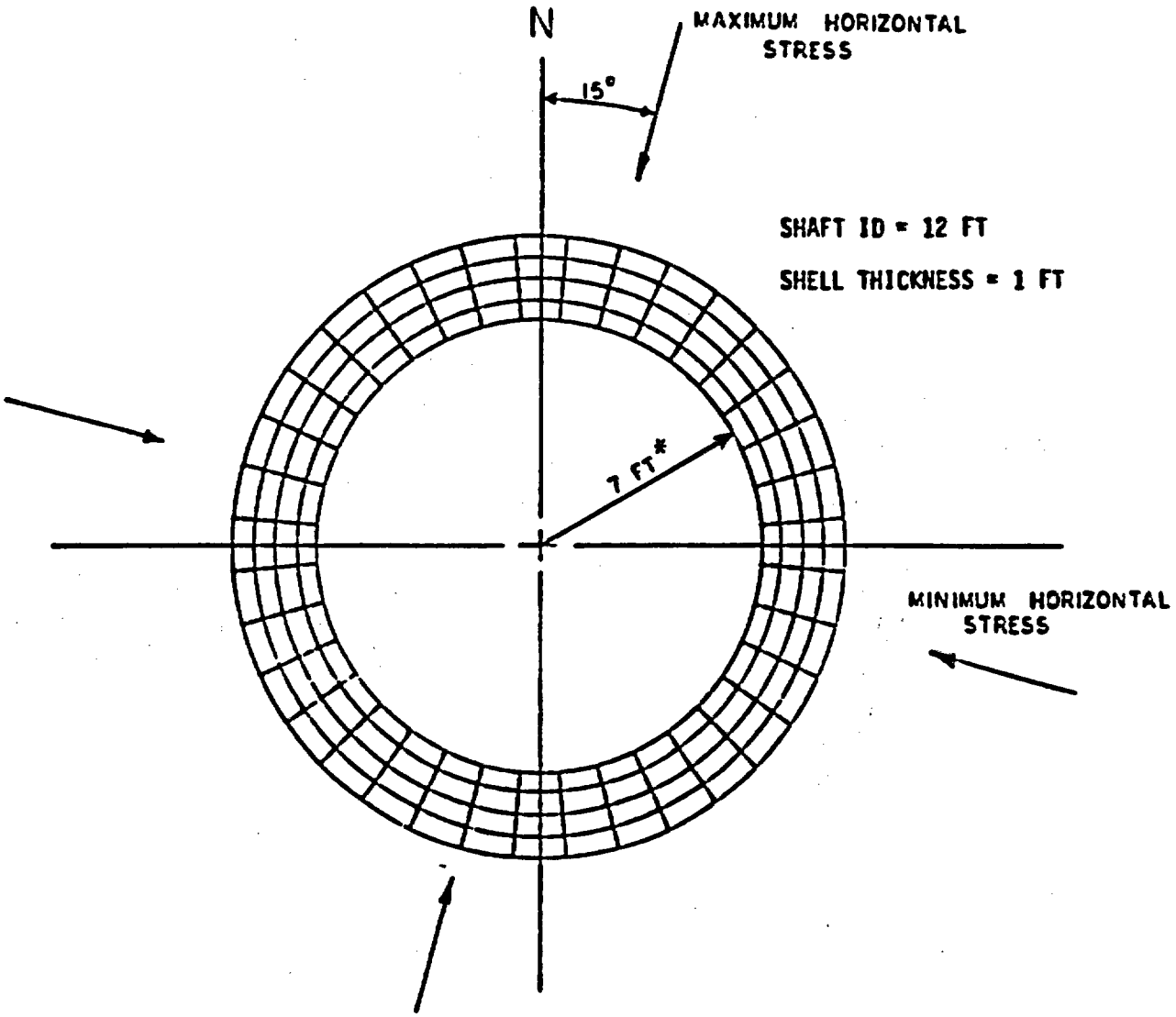

*Includes 6-ft-radius shaft plus 1-ft-thick concrete liner.

Figure 10. Boundary Element Simulation For Cases 1 and 2. Minimum Stress = 725 psi, Maximum Stress = 725 psi, Strength = 2,276 psi

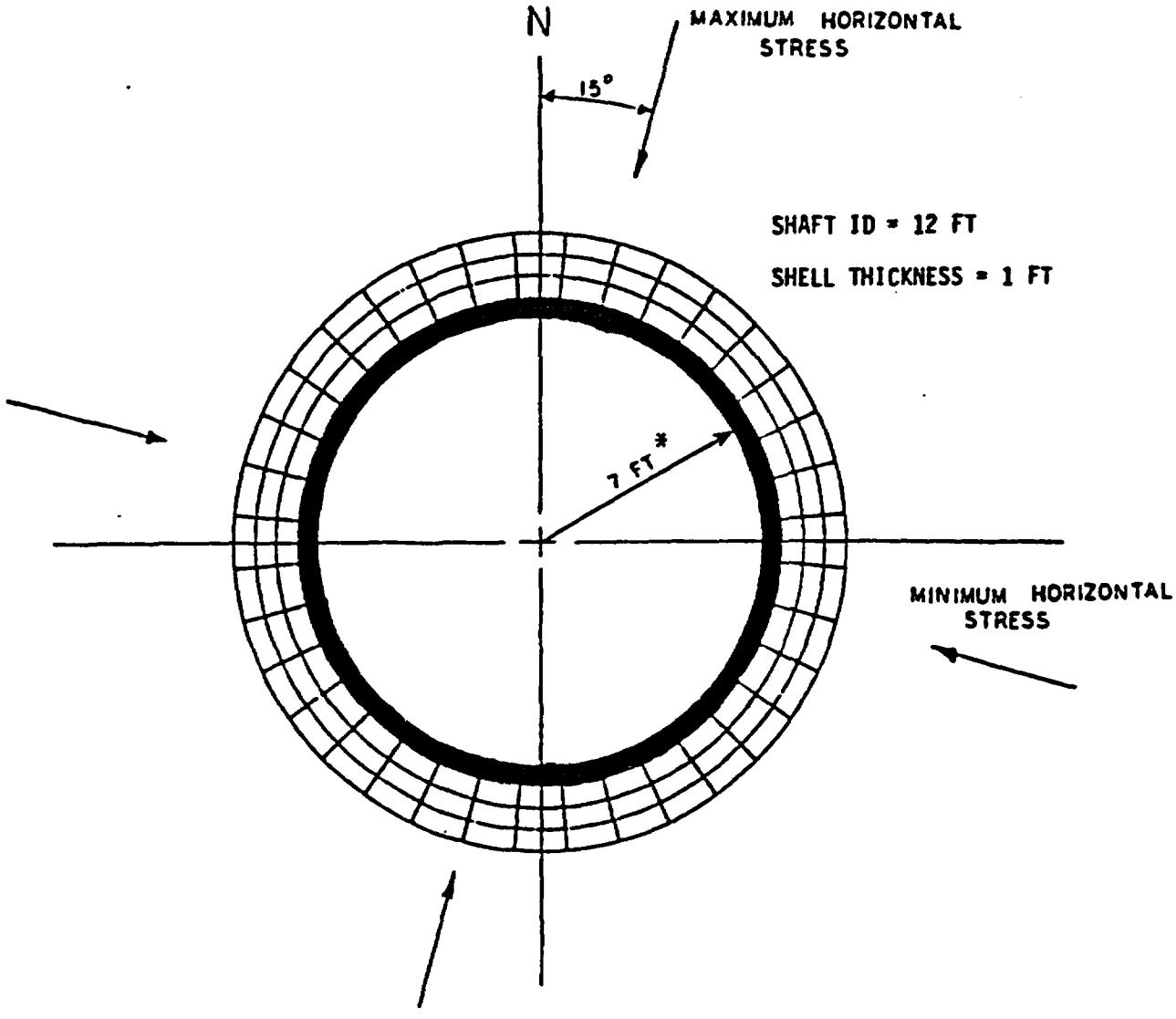

*Includes 6-ft-radius shaft plus 1-ft-thick concrete liner.

Figure 11. Boundary Element Simulation For Case 3. Minimum Stress = 725 psi, Maximum Stress = 725 psi, Strength = 1,138 psi. (The shaded area indicates a conservative estimate of the failed region.)

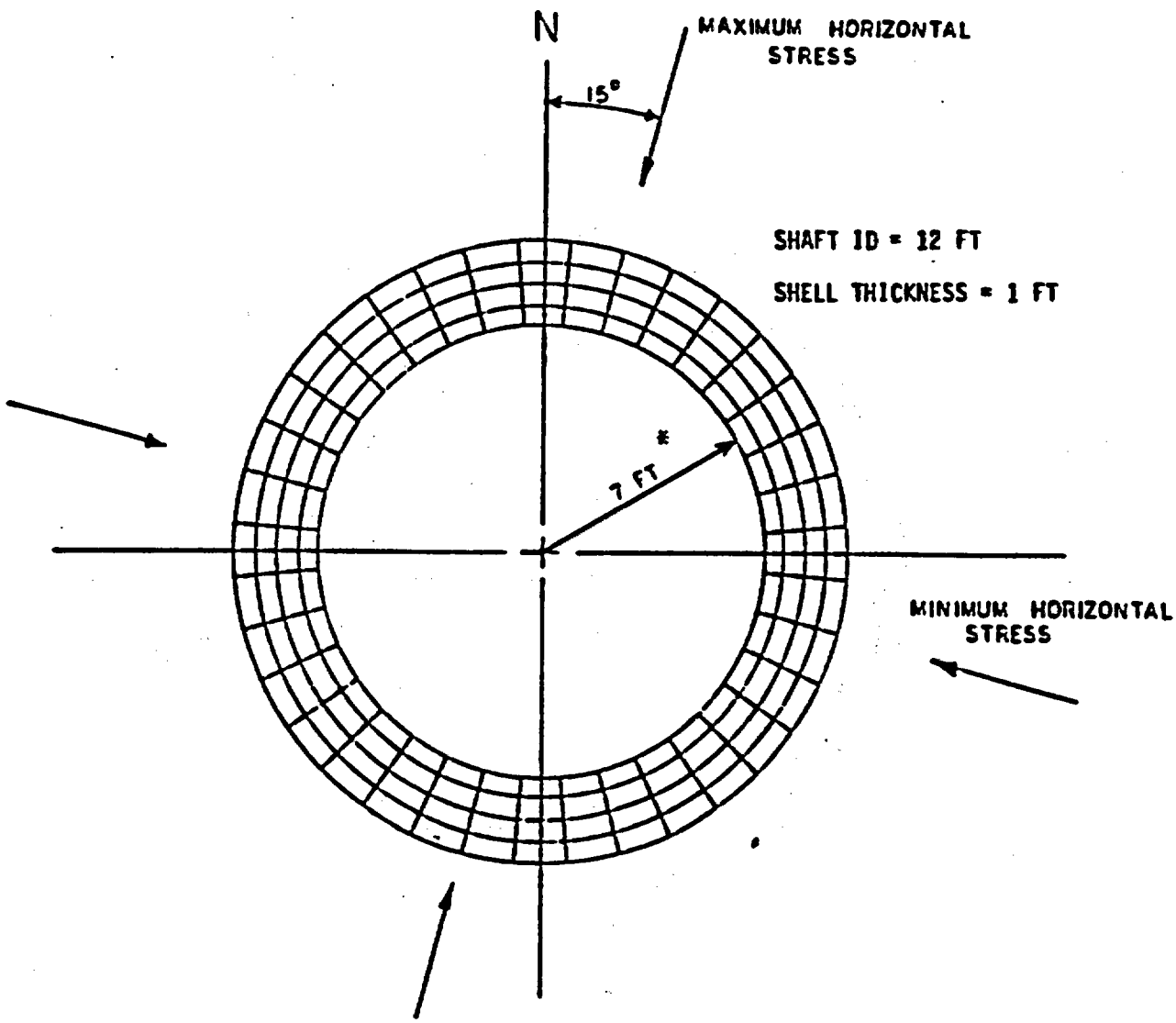

*Includes 6-ft-radius shaft plus 1-ft-thick concrete liner.

Figure 12. Boundary Element Simulation For Case 4. Minimum Stress = 725 psi, Maximum Stress = 1,450 psi, Strength = 4,553 psi

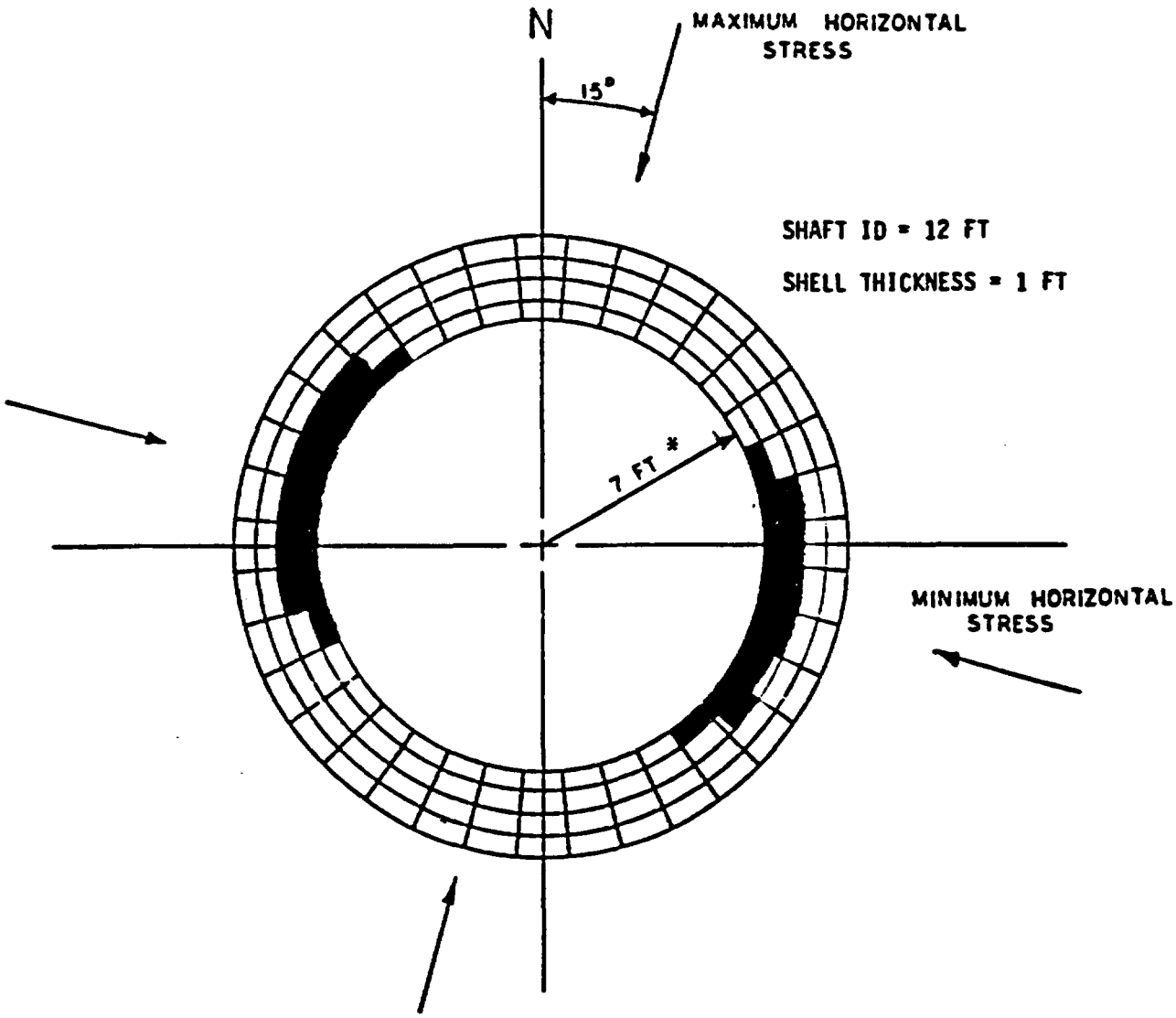

*Includes 6-ft-radius shaft plus 1-ft-thick concrete liner.

Figure 13. Boundary Element Simulation For Case 5. Minimum Stress = 725 psi, Maximum Stress = 1,450 psi, Strength = 2,276 psi. (The shaded areas indicate a conservative estimate of the failed region.)

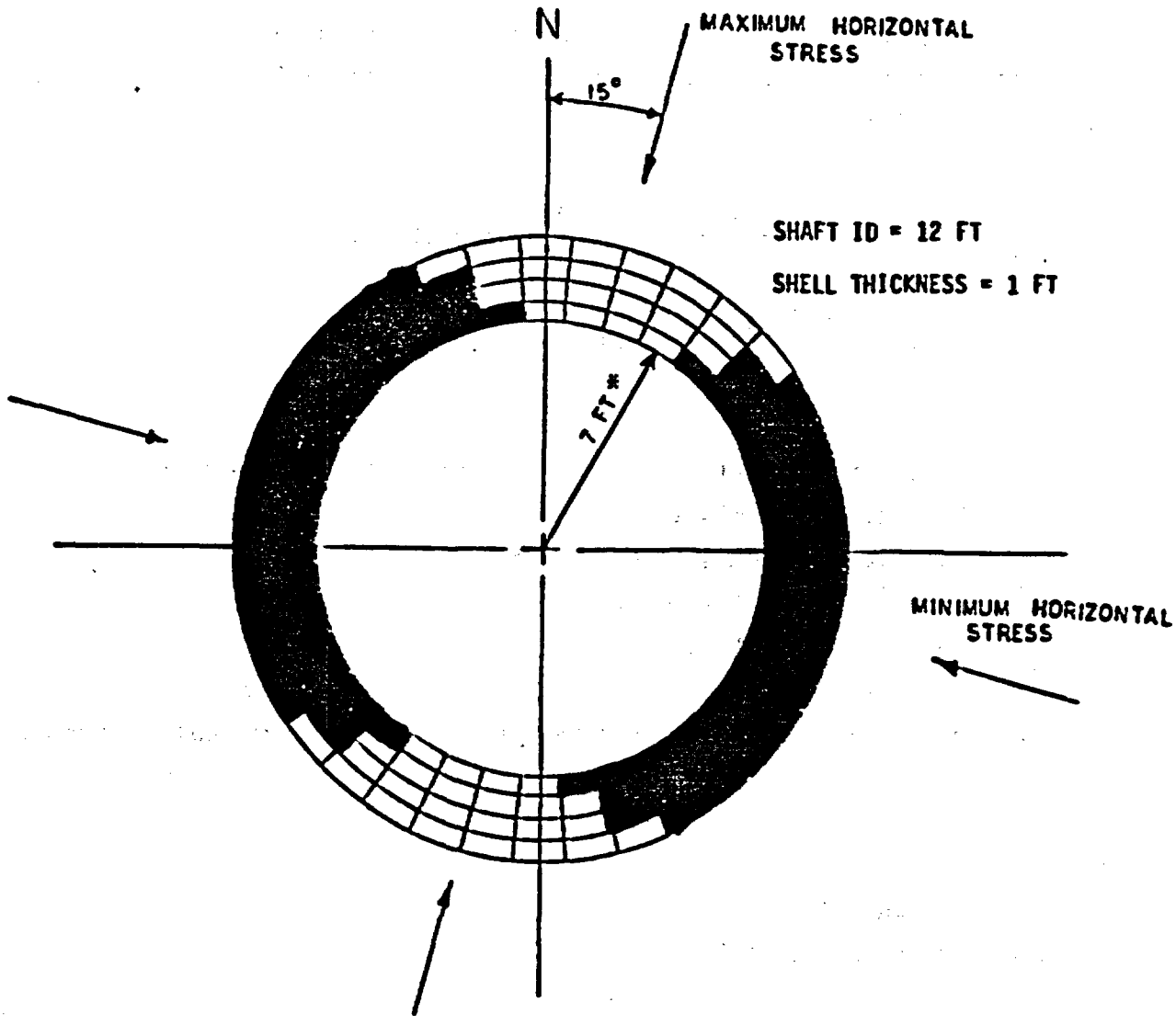

*Includes 6-ft-radius shaft plus 1-ft-thick concrete liner.

Figure 14. Boundary Element Simulation For Case 6. Minimum Stress = 725 psi, Maximum Stress = 1,450 psi, Strength = 1,138 psi. (The shaded areas indicate a conservative estimate of the failed region.)

3.3 Shaft Faults

The potential for major block sliding through fault surfaces with consequent disruption of the shaft has been considered. This situation can be represented by blocks sliding over one another as shown in Figure 15. The normal and shear stresses acting on the plane, written in terms of principal stresses, σ_1 and σ_3, are

$$S_\theta = \frac{\sigma_1 + \sigma_3}{2} + \frac{\sigma_1 - \sigma_3}{2} \cos 2\theta \quad \text{and}$$

$$\tau_\theta = \frac{\sigma_1 - \sigma_3}{2} \sin 2\theta \quad ,$$

where

S_θ = normal stress acting on the plane oriented at angle θ to the maximum principal plane,

τ_θ = shear stress acting on the plane,

σ_1 = maximum principal stress, and

σ_3 = minimum principal stress.

The resistance to sliding along the plane (shear resistance) is given by

$$T = C + \mu S_\theta \quad ,$$

where

C = cohesion and

μ = friction coefficient.

The factor of safety (FS) against sliding can then be written as

$$FS = \frac{\text{shear resistance}}{\text{shear stress}}$$

or

$$FS = \frac{C + \mu \dfrac{\sigma_1 + \sigma_3}{2} + \dfrac{\sigma_1 - \sigma_3}{2} \cos 2\theta}{\dfrac{\sigma_1 - \sigma_3}{2} \sin 2\theta} \quad .$$

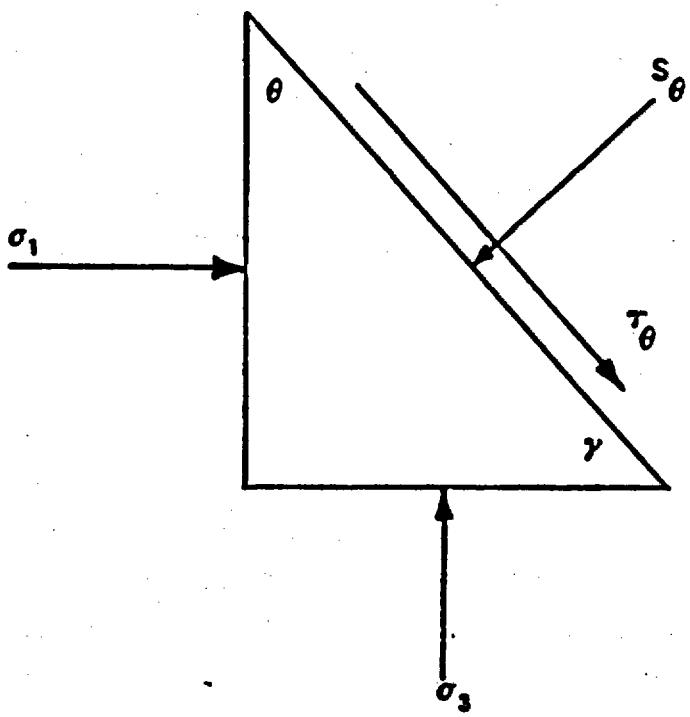

Figure 15. Diagrammatic Representation of the Stresses Acting on a Plane Oriented at an Angle to the Principal Planes

In applying the equations to the analysis of the fault behavior at Yucca Mountain

$\sigma_1 = \sigma_{overburden}$,
$\sigma_3 = \sigma_H(min)$,
$\sigma_H(min) = 1/3\ \sigma_{overburden}$ (for $\nu = 0.25$), and
θ = dip angle of the faults.

In the most conservative case that is analyzed here, the cohesion (C) is assumed to be 0. (This is an extremely conservative assumption because even if there is no true cohesion, waviness along the fault plane can lead to an apparent cohesion.) For this particular set of conditions, the FS has been plotted as a function of dip angle and coefficient of friction in Figure 16. Attention should be focused on fault dips of 75° to 85° that apply at Yucca Mountain.

3.4 Shaft Lining Requirements

There is little information in the literature to provide the guidance needed in determining shaft lining requirements. Few measurements of actual lining pressures have been measured and reported. However, information concerning the lining at the Mt. Taylor Mine of Gulf Minerals in the Grants area of New Mexico is available and the details are summarized in Table 5 (Abel et al., 1979). The shaft bottoms out at a depth of approximately 3,032 ft in the Westwater Canyon Member. The horizontal stress field is considered to be isotropic and of a magnitude 0.7 times the overburden stress. The strength properties of the Mancos Shale (dry samples) and the Westwater Canyon Member formations, essentially bound that of the Calico Hills (dry samples). That is, the strength value for the Calico Hills formation falls within the strength value curves for Mancos Shale and Westwater Canyon Members formations. The average horizontal stress is higher than that assumed for Yucca Mountain. Therefore, because other information is lacking, the Mt. Taylor data will be used as a guide to approximate the design of the shaft lining for the ES. (Although the Mt. Taylor data are useful as a guide, the Yucca Mountain material is entirely different.)

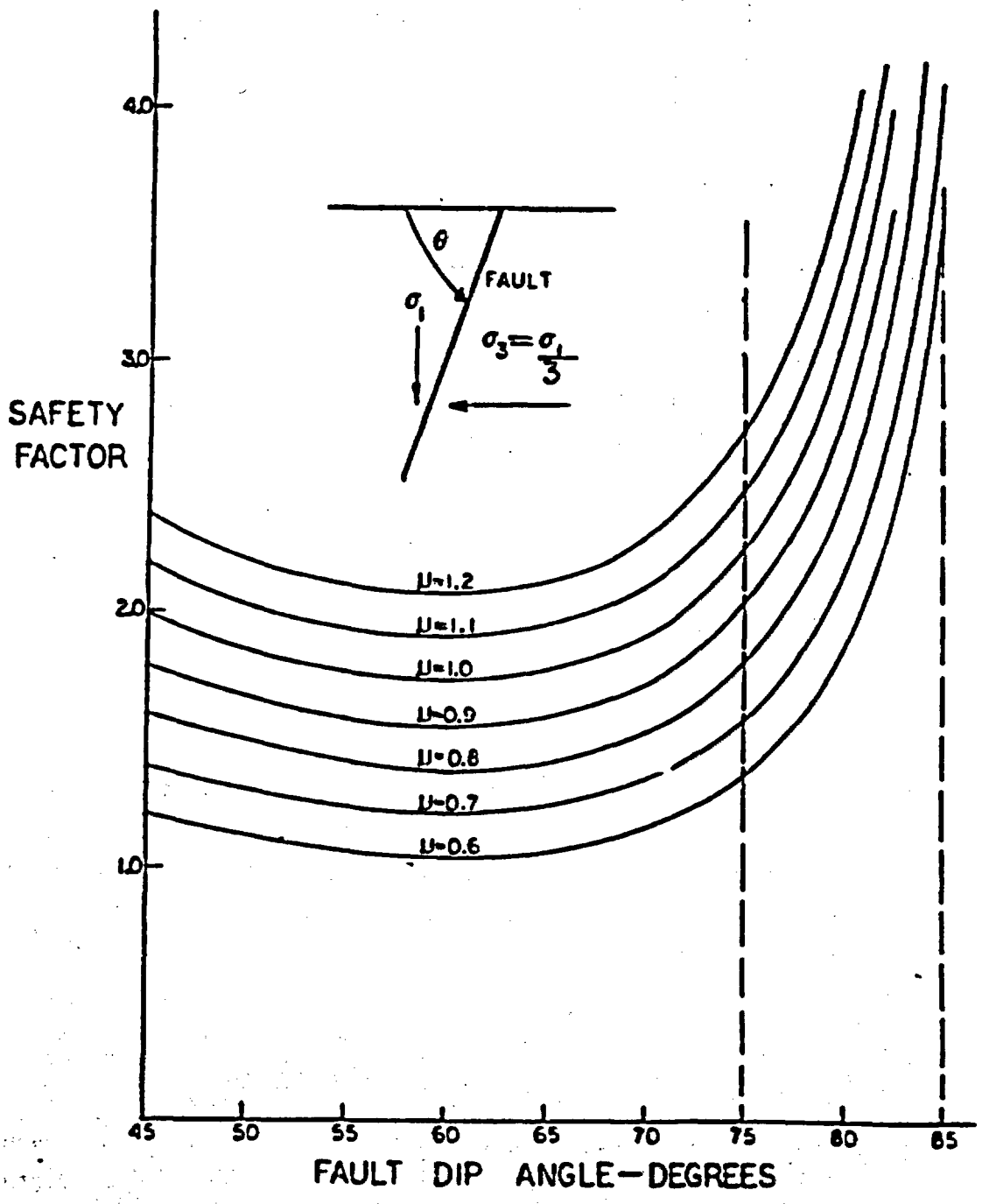

Figure 16. Safety Factor Against Sliding as a Function of Fault Dip Angle and Coefficient of Friction

Table 5

Summary of Mt. Taylor Data[a]

Conventionally Sunk Shaft

Concrete Lining ID

14 ft

5,000 psi

Excavation Diameter = 18 ft

Nominal Wall Thickness = 2 ft

Depth = 3,032 ft

Rock Types

- Mancos Shale

  $\sigma_1 = 7{,}720 + 3.27\ \sigma_3$ (psi)

- Westwater Canyon Member

  $\sigma_1 = 2{,}730 + 2.90\ \sigma_3$ (psi)

[a]Abel et al., 1979.

Abel et al. (1979) report the measured lining pressures at three elevations in the shaft as shown in Figure 17. If the tuffs are quite viscoelastic with short relaxation times, the material will essentially flow around the liner. In this case, pressure on the liner may reach a sizeable fraction of the original stress field in a few years to possibly a few thousand years. Some viscoelastic (creep) studies should be recommended because if the material creeps, P_0 approaches at least σ_3. With $\sigma_3 \sim 800$ psi, the value for σ_0 in Equation 1 becomes 10,800 psi (failure of a 5,000- or 7,000-psi concrete). This is clearly a worst-case scenario, but it is possible and suggests the need for further studies. Mancos shale is present at the 1,000- and 2,000-ft depths, and Westwater is at the 3,000-ft depth. Upper and lower bounding curves, incorporating all reasonable data points, were drawn by the present author to indicate that at a depth of 1,600 ft

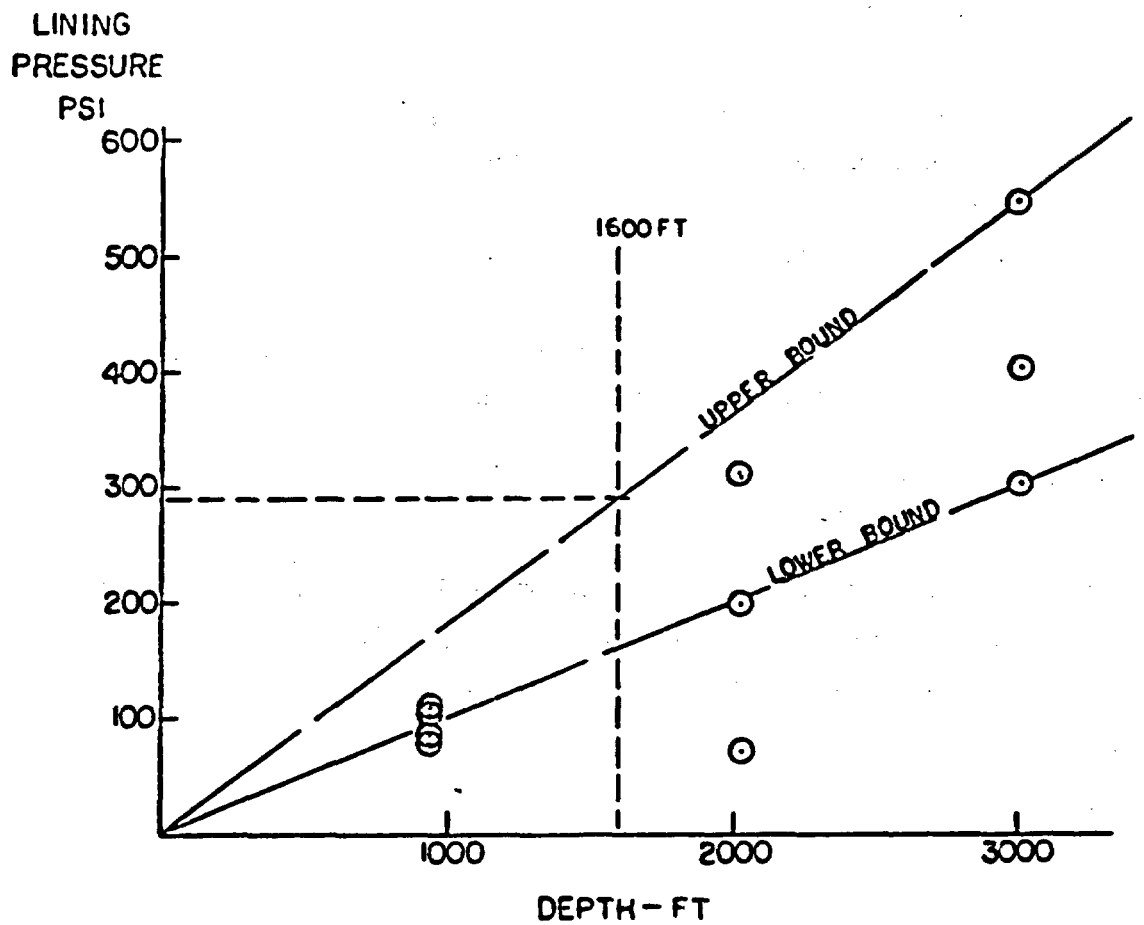

Figure 17. Measured Lining Pressures at the Mt. Taylor Shaft (Abel et al., 1979)

(the approximate maximum depth of the ES) the corresponding upper bound lining pressure is 300 psi. The maximum lining stress can be calculated using the thick-walled cylinder representation:

$$\sigma_\theta = \frac{2\,P_O\,(a + t)^2}{(a + t)^2 - a^2} \quad ,$$

where

σ_θ = maximum tangential stress in the lining (psi),

P_O = pressure applied to outside of lining (psi),

a = inner shaft radius (in.), and

t = thickness of shaft lining (in.).

The FS can be computed by comparing the maximum tangential stress (σ_θ) in the lining to the compressive strength of the lining (CS):

$$FS = \frac{CS}{\sigma_\theta} \quad .$$

The FS has been plotted as a function of lining thickness for 5,000- and 7,000-psi concrete in Figure 18. The corresponding safety factors against compressive failure for a minimum 12-in.-thick lining are 2.21 and 3.09, respectively.

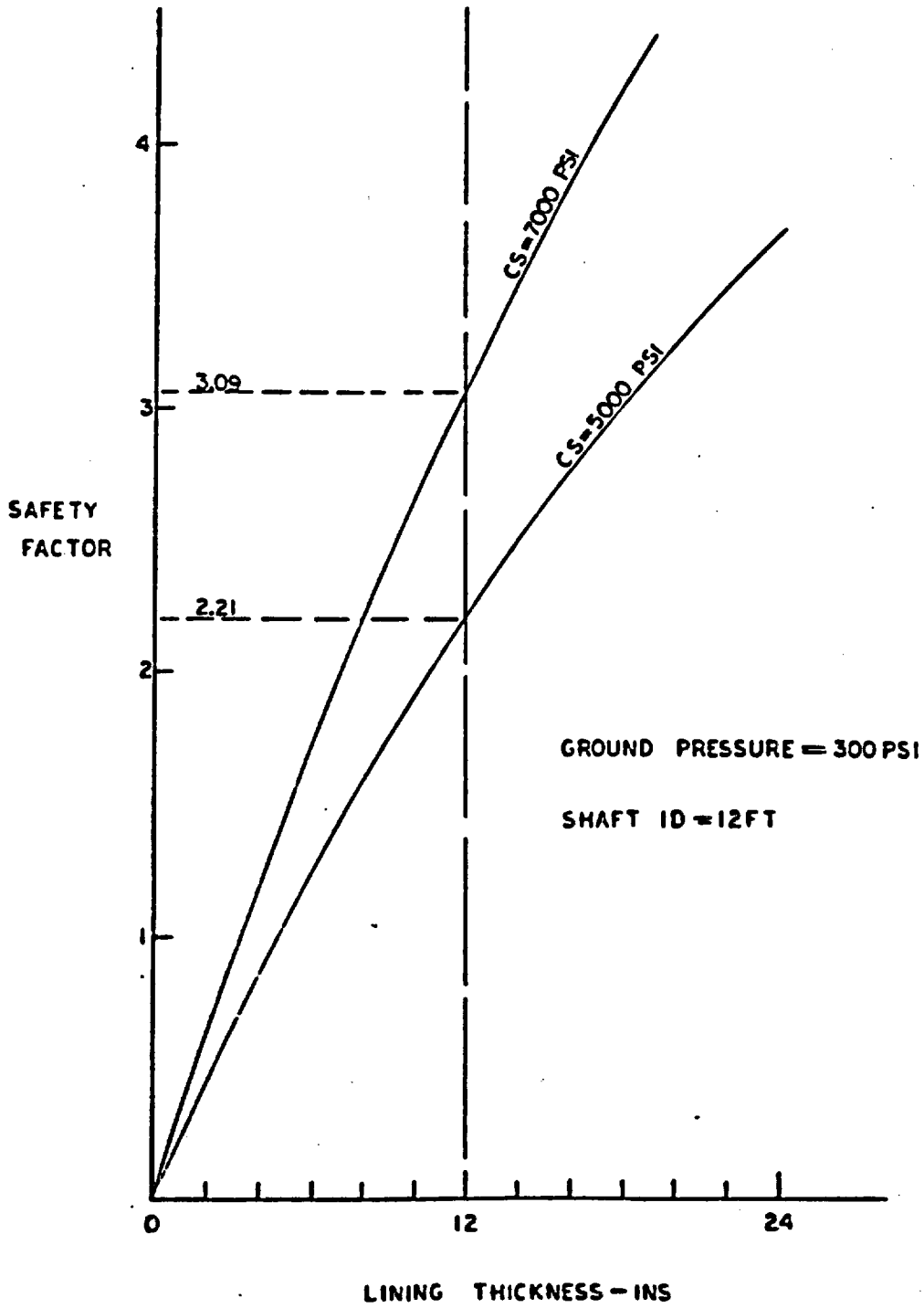

Figure 18. Safety Factor as a Function of Lining Thickness and Concrete Strength

4.0 RESULTS OF INVESTIGATION

For conventional shaft sinking,

- Only that portion of the shaft wall, which has daylighting joint toes, would require reinforcement. Although from an operational viewpoint, other considerations, such as geologists actively mapping at the shaft bottom, may dictate further reinforcement.
- Because the lining will probably be kept at a minimum distance of about two diameters from the shaft bottom, most of the rock relaxation (development of the relaxed zone) will have occurred before lining installation. Therefore, translation of the boundary element simulation results into expected lining pressures is difficult. If all of the relaxation has occurred before lining, then the expected lining pressure would be zero. If further bulking occurs after lining emplacement, then pressure could develop.
- Given the conditions in Subsection 3.3, the minimum FS against sliding (neglecting cohesion) is about 1.4, which suggests that shaft disruption by block sliding is very unlikely.

The boundary element simulation indicates that

- The horizontal stress ratio does have a significant effect on the extent of failure.
- If a rock mass strength reduction factor of two applies, the failure problems would be minimal.
- If a rock mass strength reduction factor of four applies and the horizontal stress field is nonisotropic, then shaft wall failures could occur.
- With respect to the possibility of shaft wall failures, maximum wall sloughing would occur at 90° to the direction of the maximum horizontal stress.

5.0 RECOMMENDATIONS AND CONCLUSIONS

The primary shaft sinking will occur in the Topopah Spring formation, and the shaft construction will have to contend with the presence of high-angle joints. The logs suggest the presence of a few zones where special construction watchfulness and care may have to be taken. Given the potential for joint loosening, the blast pattern should be carefully planned and executed. Reinforcement before lining of some portions of the shaft wall may be required on a regular basis. The final detailed USGS drilling and core logs should be carefully studied, and potential zones for fault-induced local instabilities delineated for the shaft contractors. In this way, any danger to the shaft sinkers would be minimized. Some additional time for bolting, scaling, and observation should be included in the schedule.

It is highly recommended that a shaft instrumentation program (lining pressures, development, and extent of the relaxed zone) be incorporated into the sinking program. Furthermore, samples of concrete should be taken (at the shaft bottom) and tested at regular intervals to assure that a proper mix is being delivered. Care should be taken to deal with segregation. Observations in both the Topopah Spring formation and the early stages of the Calico Hills formation could be used to modify the lining design in the deeper portions of the Calico Hills, should that become necessary.

As with most shaft sinking programs, there is relatively little information available upon which to make a very detailed design analysis. The analysis that has been done suggests that

- A lining thickness of 12 in. of 5,000-psi concrete should be very adequate for the proposed shaft and should not present any special construction problems.
- Major shaft-sinking difficulties are not anticipated.
- The jointed nature of the Topopah Spring Member may require some temporary reinforcement before installation of the lining. The need for this reinforcement (which would be in the form of bolts and possibly mesh) would be controlled by
    - the orientation and spacing of joints,
    - the degree of blast damage done during sinking, and
    - the distance between the shaft bottom and the lining.

- In the Calico Hills, depending upon the rock mass strength and the ratio of the horizontal stresses, some rock reinforcement may be needed before lining. If the maximum principal stress direction is N 15° E, some minor spalling of the walls at 90° to this direction might occur. Bolts, 5 to 6 ft long, would easily restrain deterioration.
- The disruption of shaft functions by block sliding along fault planes is considered extremely remote. However, local instabilities in the vicinity of faults should be expected. If instabilities are anticipated and planned for, the exposed wedges of rock can be easily handled with bolts. A careful examination of the core log should provide the necessary planning assistance for the contractor.
- A carefully planned and coordinated geomechanics measurement program should provide the information needed to assess the design of this shaft and to make recommendations for improving the design of future shafts.

6.0 REFERENCES

Abel, J. F., Jr., J. E. Dowis and D. P. Richards, 1979, "Concrete Shaft Lining Design," 20th U.S. Symposium on Rock Mechanics, Austin, Texas, pp 627-640.

Bredehoeft, J. D., R. G. Wolf, W. S. Keys and E. Shuter, 1976, "Hydraulic Fracturing to Determine the Regional In Situ Stress Field, Piceance Basin, Colorado," Geological Society of America Bulletin, Vol. 87, February 1976, pp. 250-258.

Duvall, W. I., 1977, "General Principles of Underground Opening Design in Competent Rock," Proceedings of the 17th U.S. Symposium on Rock Mechanics, Salt Lake City, Utah.

Haimson, B. C., personal communication with D. L. Vieth, February 17, 1983.

Hustrulid, W. A., 1984, "Lining Considerations for a Circular Vertical Shaft in Generic Tuff," SAND83-7068, Sandia National Laboratories, Albuquerque, NM.

Spengler, R. W., F. M. Byers, Jr., and J. Warner, 1981, "Stratigraphy and Structure of Volcanic Rocks in Drill Hole USW G-1, Yucca Mountain, Nye County, Nevada," USGS, Denver Open File Report 81-1349.

Tillerson, Joe, personal communication with W. Hustrulid, 1981.

DISTRIBUTION LIST

B. C. Rusche (RW-1)
Director
Office of Civilian Radioactive
Waste Management
U.S. Department of Energy
Forrestal Building
Washington, DC 20585

J. W. Bennett (RW-20)
Office of Geologic Repositories
U.S. Department of Energy
Forrestal Building
Washington, DC 20585

Ralph Stein (RW-23)
Office of Geologic Repositories
U.S. Department of Energy
Forrestal Building
Washington, DC 20585

J. J. Fiore, (RW-22)
Program Management Division
Office of Geologic Repositories
U.S. Department of Energy
Forrestal Building
Washington, DC 20585

M. W. Frei (RW-23)
Engineering & Licensing Division
Office of Geologic Repositories
U.S. Department of Energy
Forrestal Building
Washington, DC 20585

E. S. Burton (RW-25)
Siting Division
Office of Geologic Repositories
U.S. Department of Energy
Forrestal Building
Washington, D.C. 20585

C. R. Cooley (RW-24)
Geosciences & Technology Division
Office of Geologic Repositories
U.S. Department of Energy
Forrestal Building
Washington, DC 20585

T. P. Longo (RW-25)
Program Management Division
Office of Geologic Repositories
U.S. Department of Energy
Forrestal Building
Washington, DC 20585

Cy Klingsberg (RW-24)
Geosciences and Technology Division
Office of Geologic Repositories
U. S. Department of Energy
Forrestal Building
Washington, DC 20585

B. G. Gale (RW-25)
Siting Division
Office of Geologic Repositories
U.S. Department of Energy
Forrestal Building
Washington, D.C. 20585

R. J. Blaney (RW-22)
Program Management Division
Office of Geologic Repositories
U.S. Department of Energy
Forrestal Building
Washington, DC 20585

R. W. Gale (RW-44)
Office of Policy, Integration, and
Outreach
U.S. Department of Energy
Forrestal Building
Washington, D.C. 20585

J. E. Shaheen (RW-44)
Outreach Programs
Office of Policy, Integration and
Outreach
U.S. Department of Energy
Forrestal Building
Washington, DC 20585

J. O. Neff
Salt Repository Project Office
U.S. Department of Energy
505 King Avenue
Columbus, OH 43201

D. C. Newton (RW-23)
Engineering & Licensing Division
Office of Geologic Repositories
U.S. Department of Energy
Forrestal Building
Washington, DC 20585

O. L. Olson, Manager
Basalt Waste Isolation Project Office
U.S. Department of Energy
Richland Operations Office
Post Office Box 550
Richland, WA 99352

D. L. Vieth, Director (4)
Waste Management Project Office
U.S. Department of Energy
Post Office Box 14100
Las Vegas, NV 89114

D. F. Miller, Director
Office of Public Affairs
U.S. Department of Energy
Post Office Box 14100
Las Vegas, NV 89114

D. A. Nowack (14)
Office of Public Affairs
U.S. Department of Energy
Post Office Box 14100
Las Vegas, NV 89114

B. W. Church, Director
Health Physics Division
U.S. Department of Energy
Post Office Box 14100
Las Vegas, NV 89114

Chief, Repository Projects Branch
Division of Waste Management
U.S. Nuclear Regulatory Commission
Washington, D.C. 20555

S. A. Mann, Manager
Crystalline Rock Project Office
U.S. Department of Energy
9800 South Cass Avenue
Argonne, IL 60439

K. Street, Jr.
Lawrence Livermore National
Laboratory
Post Office Box 808
Mail Stop L-209
Livermore, CA 94550

L. D. Ramspott (3)
Technical Project Officer for NNWSI
Lawrence Livermore National
Laboratory
P.O. Box 808
Mail Stop L-204
Livermore, CA 94550

J. E. Boudreau
Los Alamos National Laboratory
P.O. Box 1663
Mail Stop F-671
Los Alamos, NM 87545

D. T. Oakley (3)
Technical Project Officer for NNWSI
Los Alamos National Laboratory
P.O. Box 1663
Mail Stop F-671
Los Alamos, NM 87545

W. W. Dudley, Jr. (3)
Technical Project Officer for NNWSI
U.S. Geological Survey
Post Office Box 25046
418 Federal Center
Denver, CO 80225

NTS Section Leader
Repository Project Branch
Division of Waste Management
U.S. Nuclear Regulatory Commission
Washington, D.C. 20555

Document Control Center
Division of Waste Management
U.S. Nuclear Regulatory Commission
Washington, D.C. 20555

P. T. Prestholt
NRC Site Representative
1050 East Flamingo Road
Suite 319
Las Vegas, NV 89109

M. E. Spaeth
Technical Project Officer for NNWSI
Science Applications
International, Corp.
2769 South Highland Drive
Las Vegas, NV 89109

SAIC-T&MSS Library (2)
Science Applications
International, Corp.
2950 South Highland Drive
Las Vegas, NV 89109

W. S. Twenhofel, Consultant
Science Applications
International, Corp.
820 Estes Street
Lakewood, CO 80215

A. E. Gurrola
General Manager
Energy Support Division
Holmes & Narver, Inc.
Post Office Box 14340
Las Vegas, NV 89114

J. A. Cross, Manager
Las Vegas Branch
Fenix & Scisson, Inc.
Post Office Box 15408
Las Vegas, NV 89114

N. E. Carter
Battelle Columbus Laboratory
Office of Nuclear Waste Isolation
505 King Avenue
Columbus, OH 43201

V. M. Glanzman
U.S. Geological Survey
Post Office Box 25046
913 Federal Center
Denver, CO 80225

J. B. Wright
Technical Project Officer for NNWSI
Westinghouse Electric Corporation
Waste Technology Services Division
Nevada Operations
Post Office Box 708
Mail Stop 703
Mercury, NV 89023

ONWI Library (2)
Battelle Columbus Laboratory
Office of Nuclear Waste Isolation
505 King Avenue
Columbus, OH 43201

W. M. Hewitt, Program Manager
Roy F. Weston, Inc.
2301 Research Blvd., 3rd Floor
Rockville, MD 20850

H. D. Cunningham
General Manager
Reynolds Electrical &
Engineering Co., Inc.
Post Office Box 14400
Mail Stop 555
Las Vegas, NV 89114

T. Hay, Executive Assistant
Office of the Governor
State of Nevada
Capitol Complex
Carson City, NV 89710

R. R. Loux, Jr., Director (8)
Nuclear Waste Project Office
State of Nevada
Capitol Complex
Carson City, NV 89710

C. H. Johnson, Technical
Program Manager
Nuclear Waste Project Office
State of Nevada
Capitol Complex
Carson City, NV 89710

John Fordham
Desert Research Institute
Water Resources Center
Post Office Box 60220
Reno, NV 89506

Department of Comprehensive
Planning
Clark County
225 Bridger Avenue, 7th Floor
Las Vegas, NV 89155

Lincoln County Commission
Lincoln County
Post Office Box 90
Pioche, NV 89043

Community Planning and
Development
City of North Las Vegas
Post Office Box 4086
North Las Vegas, NV 89030

William Hustrulid
28599 Buchanan Drive
Evergreen, CO 80439

Dr. Martin Mifflin
Desert Research Institute
Water Resources Center
Suite 201
1500 East Tropicana Avenue
Las Vegas, NV 89109

Planning Department
Nye County
Post Office Box 153
Tonopah, NV 89049

Economic Development
Department
City of Las Vegas
400 East Stewart Avenue
Las Vegas, NV 89101

J. L. Younker (15)
Science Applications, Inc.
2769 S. Highland Drive
Las Vegas, NV 89101

6300 R. W. Lynch
6310 T. O. Hunter
6310 NNWSICF
6311 L. W. Scully
6311 L. Perrine (2)
6312 F. W. Bingham
6313 J. R. Tillerson
6314 M. Robb (5)
6332 WMP Library
6430 N. R. Ortiz
3141 C. M. Ostrander (5)
3151 W. L. Garner (3)
8024 M. A. Pound
DOE/TIC (28)
(3154-3 C. H. Dalin)