1989
3rd party review

III.G.1 - 1 redundant train (somewhere)

September 28, 2001

0CAN090103

III.G.2 - protect safedown equip (1 train) free fire damage
1 different area
2 wrap
3 separate (exemption)
"associated + required circuits"

U. S. Nuclear Regulatory Commission
Document Control Desk
Mail Station OP1-17
Washington, DC 20555

III G.3 - alternate (dedicated S/D) capability meeting goals of 3L

Subject: Arkansas Nuclear One - Units 1 and 2
Docket Nos. 50-313 and 50-368
License Nos. DPR-51 and NPF-6
Response to Inspection Report 01-06
Triennial Fire Protection

Gentlemen:

The subject inspection report dated August 20, 2001, included Unresolved Item (URI) 0106-02 which states, *The acceptability of the use of manual actions in lieu of providing protection for cables associated with equipment necessary for achieving and maintaining hot shutdown (for a fire in Fire Zones 98J and 99M) for meeting 10CFR Part 50 Appendix R Section III.G.2 is an unresolved item pending further NRC review. The significance of this issue is also part of this unresolved item.*

On August 30, 2001, the Nuclear Regulatory Commission (NRC) Region IV and representatives of Arkansas Nuclear One (ANO) conducted a telephone re-exit. During that re-exit the NRC informed ANO that to comply with the separation requirements of Section III.G.2, manual actions may not be credited in lieu of providing protection for cables associated with components of redundant trains of equipment necessary for achieving and maintaining hot shutdown and that consequently, ANO is in violation of 10CFR Part 50, Appendix R *Fire Protection Program for Nuclear Power Facilities Operating Prior to January 1, 1979.* The NRC also indicated that the use of a manual action would require an approved exemption or the zone must be classified as an "Alternate Shutdown location."

The purpose of this letter is to provide information which shows that the NRC has accepted on many occasions, including at this plant, the use of manual actions to operate components of redundant trains of equipment to achieve and maintain safe shutdown in the event of a fire as complying with Section III.G.2. In brief, Section III.G.2 requires the protection of one train of redundant systems necessary to achieve and maintain hot

Free of fire damage
design vs => redundant safe shutdown
non-standard => alternate S/D

prevent fire damage

18

shutdown. Section III.G.1 recognizes that some of the systems necessary to achieve shutdown may include emergency control stations in lieu of cables in the fire areas. There is no question that manual actions may be taken either in the control room or at emergency control stations as part of the safe shutdown process. Moreover, where manual actions have been taken at emergency control stations for redundant safe shutdown equipment, those emergency control stations are not considered "Alternate shutdown components" and Section III.L *Alternative and Dedicated Shutdown Capability* does not apply. In summary, the ANO position concerning manual actions is:

1. The use of manual actions to operate necessary components of redundant safe shutdown equipment located outside the identified fire areas is permitted by 10CFR50 Appendix R, Section III.G.1 and does not violate 10CFR50 Section III.G.2;
2. Compliance with 10CFR50 Appendix R, Section III.G.2 does not require protective features on circuits that are not required to function and therefore, are not necessary systems required to achieve safe shutdown conditions and, regardless of fire damage cannot prevent the ability to achieve safe shutdown conditions.

The use of manual actions to achieve safe shutdown conditions in the event of a fire has been a standard practice at ANO since the inception of Appendix R.

NRC guidance provided during initial implementation and subsequent clarification of Appendix R requirements supports our interpretation on the use of manual actions. Generic industry guidance also agrees with this interpretation.

Additionally, the ANO licensing basis has been reviewed and approved by the NRC and is consistent with documented NRC guidance concerning the use of manual actions for achieving and maintaining safe shutdown conditions in the event of a fire. During the implementation phase of Appendix R, the ANO methodology for the use of manual actions was submitted for NRC review. This methodology was not addressed or challenged in subsequent correspondence or the Safety Evaluation Reports (SERs). Based on this tacit approval, the use of manual actions became a part of the ANO licensing basis.

Specifically, ANO maintains one train of systems necessary to achieve and maintain safe shutdown "free of fire damage," as required by Section III.G.1. The unprotected circuits addressed in the URI are associated circuits that interface with safe shutdown components but are not part of the systems necessary to achieve safe shutdown conditions. Acceptable manual actions outside the fire area of concern provide the necessary control of systems required for safe shutdown. Moreover, analysis has shown that these associated circuits will not inhibit the ability of ANO-1 to reach a safe shutdown condition. Therefore, ANO is in compliance with Section III.G.2 and an exemption for the use of manual actions is not required.

staff position

A review of NRC inspection procedures and inspection reports from other licensees indicates that the NRC has previously taken a position consistent with current industry practices concerning the use of manual actions. Industry survey results also indicate that a large number of utilities have taken a position that agrees with the ANO interpretation on the use of manual actions. Recent inspections as well as recent guidance (including specific direction to the BWROG) confirms the ANO interpretation on the use of manual actions. ?

ANO reviewed existing NRC guidance documents, inspection reports, docketed correspondence, other industry data, and the ANO licensing basis concerning the use of manual actions. From this review, ANO has concluded that the use of manual actions satisfies the requirement that redundant safe shutdown equipment remains "free from fire damage" to achieve safe shutdown. ANO also reviewed the manual actions required to operate equipment, which may have its remote control capability impaired by a fire in zones 98-J and 99-M and found them appropriate and achievable.

w/ exemption

Considering the previously accepted interpretation of Appendix R Sections III.G.1 and III.G.2 requirements, ANO is in compliance and imposition of the new position should be considered a backfit that is generic to all plants.

Until this issue is resolved, a combination of continuous and roving fire watches have been placed in ANO-1&2 fire areas where credit has been taken for the use of manual actions to meet Section III.G.1. Given the extensive resources required to maintain the compensatory measures, ANO requests the NRC's expeditious review of this issue.

Attachment 1 contains discussions on the regulatory aspects of 10CFR50 Appendix R. Attachment 2 contains discussions on the industry perspectives concerning the implementation of Appendix R.

Should you have questions or comments please call me at 501-858-4888.

Yours Truly,

CRA/RMC

Attachments

cc:

Mr. Ellis W. Merschoff
Regional Administrator
U.S. Nuclear Regulatory Commission
Region IV
611 Ryan Plaza Drive, Suite 400
Arlington, Texas 76011-8064

Mr. William D. Reckley
NRR Project Manager
U. S. Nuclear Regulatory Commission
NRR Mail Stop 07-D-01
One White Flint North
11555 Rockville Pike
Rockville, MD 20852

Mr. Tom Alexion
NRR Project Manager
U. S. Nuclear Regulatory Commission
NRR Mail Stop 04-D-03
One White Flint North
11555 Rockville Pike
Rockville, MD 20852

NRC Senior Resident Inspector
Arkansas Nuclear One
P.O. Box 310
London, AR 72847

ATTACHMENT 1
10CFR50 APPENDIX R III.G COMPLIANCE EVALUATION

BACKGROUND

On March 22, 1975, the Browns Ferry Nuclear Power Plant experienced a significant fire that impacted the control of components in safety systems. As a result of the fire, both the industry and the NRC developed a heightened awareness to the impact of a fire in a nuclear plant. NUREG 0050, *Recommendations Related to Brown's Ferry Fire,* was published to provide recommendations toward developing effective fire protection strategies.

The NRC supplemented the recommendations of NUREG 0050 by publishing Branch Technical Position (BTP) 9.5-1, *Guidelines for Fire Protection for Nuclear Power Plants Docketed Prior to July 1, 1976,* and Appendix A to the BTP. The BTP did not provide prescriptive requirements for separating redundant equipment but provided the following general information:

> *The purpose of the Fire Protection Program for nuclear power plants is to maintain the ability to perform safe reactor plant shutdown functions and to minimize radioactive releases to the environment in the event of a fire. This Branch Technical Position addresses only fire protection for safety-related systems and equipment in nuclear power plants. Economic property loss considerations will probably dictate additional fire protection program requirements. It does not give guidance for redundant cable separation distance. Such criteria are presented in Regulatory guide 1.75, 'Physical Independence of Electrical Systems'.*
>
> *... Separate redundant safety related systems from each other so that both are not subject to damage from a single fire hazard.*

While the various licensees attempted to demonstrate plant designs that conformed to the guidance of the BTP, it became evident to the NRC staff that certain fire protection issues needed additional attention. It was determined that the guidance in Reg. Guide 1.75, *Physical Independence of Electric Systems (September 1978),* concerning separation of electrical circuits may be inadequate for various fire scenarios. Accordingly, on November 19, 1980, the NRC published Rule, 10CFR50.48, *Fire Protection* and its criteria for implementation of that rule, 10CFR50 Appendix R.

The fire damage limits specified in Appendix R are as follows:

> *Hot Shutdown - One train of equipment necessary to achieve hot shutdown from either the control room or emergency control station(s) must be maintained free of fire damage by a single fire, including an exposure fire.*
>
> *Cold Shutdown – Both trains of equipment necessary to achieve cold shutdown may be damaged by a single fire, including an exposure fire, but damage must be limited so that at least one train can be repaired or made operable with 72 hours using onsite capability.*

Specific requirements related to the capability to achieve safe shutdown are delineated in Section III.G as follows:

1. *Fire protection features shall be provided for structures, systems, and components important to safe shutdown. These features shall be capable of limiting fire damage so that:*

   a. *One train of systems necessary to achieve and maintain hot shutdown conditions from either the control room or emergency control station(s) is free of fire damage; and*
   b. *Systems necessary to achieve and maintain cold shutdown from either the control room or emergency control station(s) can be repaired within 72 hours.*

2. *Except as provided for in paragraph G.3 of this section, where cables or equipment, (including associated non-safety circuits that could prevent operation or cause maloperation due to hot shorts, open circuits, or shorts to ground,) of redundant trains of systems necessary to achieve and maintain hot shutdown conditions are located within the same fire area outside of primary containment, one of the following means of ensuring that one of the redundant trains is free of fire damage shall be provided:*

   a. *Separation of cables and equipment and associated non-safety circuits of redundant trains by a fire barrier having a 3-hour rating. Structural steel forming a part of or supporting such fire barriers shall be protected to provide fire resistance equivalent to that required of the barrier;*
   b. *Separation of cables and equipment and associated non-safety circuits of redundant trains by a horizontal distance of more than 20 feet with no intervening combustible or fire hazards. In addition, fire detectors and an automatic fire suppression system shall be installed in the fire area; or*
   c. *Enclosure of cable and equipment and associated non-safety circuits of one redundant train in a fire barrier having a 1- hour rating, In addition,*

fire detectors and an automatic fire suppression system shall be installed in the fire area.

3. ???

Based on the discussion included in ANO Inspection Report 01-06 and follow-up teleconferences, ANO understands that the current NRC position is that to ensure components of one train of systems necessary to achieve and maintain hot shutdown are "free of fire damage" (as discussed in Section III.G.1), one of the three methods specified in Section III.G.2 must be utilized for all cables associated with safe shutdown components in the fire zone of concern. This is contrary to previous NRC positions that indicated compliance with Section III.G can be achieved via local or remote manual operation of components without having to employ one of the protection schemes specified in Section III.G.2 for cables that are unnecessary for safe shutdown. Additionally, the guidance indicates that manual actions can be utilized for redundant safe shutdown components without invoking Section III.L or filing an exemption request.

-where

III.G.3

no.

NUREG 0050 noted that the ability of plant personnel to achieve safe shutdown conditions was made possible (in part) by manually operating certain safety-related components. One of the problems encountered during the Browns Ferry fire was the inability of plant personnel to align a failed air-operated valve manually (e.g., the valve was not equipped for manual operation). Consequently, NUREG 0050 recommended that the capability to manipulate components manually (i.e. ensuring valves are equipped with a handwheel) should be considered as a general design consideration. Subsequently, the NRC developed BTP 9.5-1 and its accompanying Appendix A.

What is the relevance of Nureg 0050

relevance.

During the period of 1977-1980 ANO along with other licensees developed plant specific fire hazards analyses and made modifications to improve the fire protection features of the plant. These modifications were to fulfill the intent of BTP 9.5-1 and included the use of fire retardant boards and cable coatings and/or spatial separation of cables within a fire zone.

Consequently, ANO along with the majority of the industry, analyzed the capability to achieve safe shutdown without full consideration of fire area boundaries by evaluating specific fire hazards within each fire zone. Safe shutdown was judged to be obtainable, even though redundant components and/or the associated cabling were located within the same fire area.

The statements of consideration for 10CFR50 Appendix R contains a discussion related to fire protection features previously proposed by licensees to comply with BTP 9.5-1. With respect to circuits necessary to achieve and maintain safe shutdown, the NRC stated:

> *In light of experience gained in fire protection evaluations over the past four years, the Commission believes that the licensees should reexamine those previously approved configurations of fire protection that do not meet the*

> *requirements as specified in Section III.G to Appendix R. Based on the reexamination, the Licensees must either meet the requirements as specified in Section III.G of Appendix R or apply for an exemption that justifies alternatives by a fire hazards analysis. However, based on present information, the Commission does not expect to be able to approve exemptions for fire retardant coating used as fire barriers.*

Consequently, with the issuance of Appendix R and the requirement for existing plants to comply with the separation requirements of Section III.G it was clear that previous methods to provide equipment separation were not sufficient for certain fire scenarios. Section III.G provided two methods for ensuring adequate separation between redundant safe shutdown components:

agree?

- Separate components into discrete fire areas, or
- Provide one of three separation schemes for components located within the same fire area

Section III.G.1 requires that one train of systems necessary to achieve and maintain hot shutdown be "free from fire damage". One way to accomplish this is by the physical separation of redundant components such that a single fire can not affect both trains of required components. By placing redundant components into separate fire areas, limiting "fire damage" (as specified by Section III.G.1) to a single train is assured.

In cases where redundant components (including any required cabling) are located <u>within</u> the same fire area, Section III.G.2 provides fire protection features that are deemed to provide equivalent protection as that of a fire area boundary. For those instances, where the options of Section III.G.2 cannot be readily applied, Section III.G.3 allows the use of "Alternate Shutdown" measures.

agree?

DEFINITIONS

The history concerning various interpretations of the "meaning" and intent of Appendix R is well publicized. To understand some of the terms used in Appendix R Section III.G, internal NRC memoranda as well as generic industry documents were reviewed. The following relevant terms are discussed:

<u>Alternate Shutdown</u>

GL 86-10, *Implementation of Fire Protection Requirements,* clarifies the distinction between "Alternate Shutdown" and "Redundant Shutdown" in Enclosure 3, Section 3.8.3 as follows:

QUESTION

Confusion exists as to what will be classified as an alternate shutdown system and thus what systems might be required to be protected by suppression and detection under Section III.G.3.b. For example, while we are relying upon the turbine building condensate system for a reactor building fire and the RHR system for a turbine building fire, would one system be considered the alternative to the other? If so, would suppression and detection be required for either or both systems under III.G.3.b? An explanation of alternative shutdown needs to be advanced for all licensees.

RESPONSE

If the system is being used to provide its design function, it generally is considered redundant. If the system is being used in lieu of the preferred system because the redundant components of the preferred system do not meet the separation criteria of Section III.G.2, the system is considered an alternative shutdown capability. Thus, for the example above, it appears that the condensate system is providing alternative shutdown capability in lieu of separating redundant components of the RHR System. Fire detection and a fixed fire suppression system would be required in the area where separation of redundant components of the RHR system is not provided. However, in the event of a turbine building fire, the RHR system would be used for safe shutdown and is not considered an alternative capability. However, one train of the RHR system must be separated from the turbine building.

From the above, it is clear that an "Alternate Shutdown" method is defined as the reliance on equipment in a "non-standard" mode of operation (Manual operation of equipment should not be considered non-standard). Examples of design features for manual operation abound: Motor-operated valves are designed with a handwheel to allow local manual operation, switchgear breakers are designed to allow local manual operation (both with and without DC control power), and control room handswitches are designed for manipulation by hand and allow the remote manual operation of components. Therefore, utilization of the components (and the affected systems) as designed is considered Redundant Safe Shutdown (not "Alternate Shutdown").

agree?

Reg Guide 1.189, *Fire Protection for Operating Nuclear Plants,* dated April 2001 defines associated circuits as:

Circuits that do not meet the separation requirements for safe shutdown systems and components and are associated with safe shutdown systems and components by common power supply, common enclosure, or the potential to cause spurious operations that could prevent or adversely affect the capability to safely shutdown

the reactor as a result of fire-induced failures (hot shorts, open circuits, and short to ground).

Emergency Control Station

Reg. Guide 1.189 defines an emergency control station as:

Location outside the main control room where actions are taken by operations personnel to manipulate plant systems and controls to achieve safe shutdown of the reactor.

Fire Area

Generic Letter 86-10, Enclosure 1 provided formal interpretations of Appendix R. Regarding fire areas the enclosure states:

The term 'fire area' as used in Appendix R means an area sufficiently bounded to withstand the hazards associated with the area and, as necessary, to protect important equipment within the area from a fire outside the area. In order to meet the regulation, fire area boundaries need not be completely sealed floor-to-ceiling, wall-to-wall boundaries.

Free of Fire Damage

Reg. Guide 1.189 defines the term "free of fire damage" as:

The structure, system, or component under consideration is capable of performing its intended function during and after the postulated fire, as needed, without repair.

A more in-depth discussion concerning "free of fire damage" is included in the following discussion in the regulatory/guidance documents section.

Manual Action

Automatic function circuitry is a design feature provided to mitigate or limit the consequences of one or more design basis accidents. A simple example would be the automatic opening of an ECCS injection valve when plant processes "sense" that emergency core cooling is needed. Manual actions can be performed (either remotely or locally) to achieve similar system results as that of an automatically actuated system if response time is properly considered. A remote manual action is typically performed in the control room. An example would be utilizing a hand switch in the control room to "manually" open the ECCS injection valve. A local manual action would occur at the emergency control station. Examples include manually opening the ECCS injection

valve via an attached handwheel or utilizing a handswitch on a local control panel. Ensuring that a required safe shutdown component is operable from either the control room or the emergency control station is a goal of Appendix R.

NRC REGULATORY/GUIDANCE DOCUMENTS

One of the earliest written discussions on "free of fire damage" and manual actions is found in an internal NRC memorandum dated July 2, 1982, from R. Mattson to R. Vollmer (Vollmer Memo). The pertinent section states:

> *Section III.G.1 of Appendix R states that one train of systems needed for hot shutdown must be free of fire damage. Thus, one train of systems needed for hot shutdown must be operable* [emphasis added] *during and following a fire. Operability of the hot shutdown systems, including the ability to overcome a fire or fire suppressant induced maloperation of hot shutdown equipment and the plant's power distribution system must exist without repairs. Manual operation of valves, switches and circuit breakers is allowed to operate equipment and isolate systems and is not considered a repair. However, the removal of fuses for isolation is not permitted. All manual operations must be achievable prior to the fire or fire suppressant induced maloperations reaching an unrecoverable plant condition.*

Although the title of the Vollmer Memo refers to "Alternate Shutdown", it is clear from other documents as well as the context of the memo that the discussion of "free of fire damage" applies to both redundant safe shutdown and "Alternate Shutdown" locations. For example, SECY 83-269 (July 5, 1983) was generated to provide the Commission with the current status of the fire protection programs throughout the nuclear industry. Section "b" of Attachment "C" to the SECY addressed allowable repairs to achieve safe shutdown. To provide background, a discussion of "fire damage" was provided which included the above quoted paragraph, verbatim. In addition, as noted above, Section III.G.1 and III.G.2 (i.e. redundant safe shutdown locations) both refer to "free of fire damage."

On September 23, 1983, the NRC staff briefed the Advisory Committee on Reactor Safeguards (ACRS) Subcommittee on Fire Protection concerning Alternate Shutdown strategies. As part of the discussion, repairs and the term "free of fire damage" were presented as follows:

> *For cold shutdown, there was no criteria on repairs in Appendix R so we developed some guidelines. Instead of defining what a repair was, we worked the other way. Free of fire damage means the system must be operable [emphasis added] during and following a fire. Those are systems that are immediately needed. Systems that are not needed or have a delayed effect on shutdown, we do allow some limited repairs: these are such things as containment spray. They*

would come on and not have an immediate effect but delayed effect. We define operability as including manual operation in valves, controls which is [sic] in circuit breaker operation.

Again, although the subject title refers to "Alternate Shutdown", the terms "free of fire damage" and "repairs" are discussed for both redundant safe shutdown and alternate shutdown locations. As no separate definitions were provided for redundant safe shutdown locations, it is clear that the discussion was applicable to all areas of safe shutdown (i.e. not limited to "Alternate Shutdown").

On March 16, 1983, members of the Nuclear Utility Fire Protection Group (NUFPG) met with several NRC staff members from the Inspection and Enforcement branch. Members of NUFPG posed several questions and comments to the NRC on the inspection process, in particular to the language included in Temporary Instruction 2515/62, *Inspection of Safe Shutdown Requirements of 10CFR50 Appendix R Section III.G at Nuclear Power Plants Licensed to Operate Before January 1, 1979,* Rev. 1. Concerning the review of documents to determine areas of the plant containing both trains of redundant safe shutdown equipment, the meeting minutes (as published by NUFPG) contained the following:

Q8. The following comments relate to Appendix 1 of the module on safe shutdown requirements for Appendix R:

a. Section A.2.d

Too much emphasis is to be placed on the routing and tracing of control circuits. In many instances, licensees, with the concurrence of ASB [Auxiliary Systems Branch], are taking manual control of pumps at switchgear or motor control centers. Alternatively, isolation devices and transfer switches are used to provide isolation from potentially damaged control circuits. Also, recognition of the use of manual operation of valves, recognized by ASB, should be embodied in the general guidance given here.

Aa. I&E will accept the ASB perspectives on this issue."

During the course of NRC sponsored regional workshops (1984 timeframe), four documents were provided for the benefit of understanding the various aspects of Appendix R. The information provided guidance on the various subsections of Section III.G. For the term "free of fire damage", SECY 83-269 Attachment "C", Section "b" (i.e., verbatim quote from Vollmer memo) was referenced, as well as references to documents that reiterated the three "options" specified in Section III.G.2. Regarding "free of fire damage" the philosophy presented at the workshops equated the use of manual actions with the three options of Section III.G.2.

More recently, Reg. Guide 1.189 Section 5.3, *Hot Standby (PWR) Hot Shutdown (BWR) Systems and Instrumentation* addresses "free of fire damage" as follows:

> *One success path of equipment necessary to achieve hot standby (PWR) or hot shutdown (BWR) from either the control room or emergency control stations should be maintained free of fire damage by a single fire, including an exposure fire. Manual operation of valves, switches, and circuit breakers is allowed to operate equipment and isolate systems and is not considered a repair.*

Based on the above, the NRC staff has previously interpreted the statement "free of fire damage" to mean the loss of automatic control of a component can be rectified by taking manual control of the component. The capability to take manual control must be physically separated from the location of the fire (i.e. the location where automatic control circuitry may be impacted). Consideration must also be given to the time available to perform the manual action as well as access to the component in the event that local manual control is credited. Thus, if a component with local manual control capabilities is located in an area different from the fire area where automatic/remote control circuitry is located, the loss of the circuitry does not impact the ability to control the component unless there are associated circuit concerns. In other words, the component remains operable, because the ability to control the component manually is physically separated from the fire location and the requirements of Section III.G.1 are met.

For a hypothetical yet practical example of this scenario, consider an electrically driven injection pump (Pump 1) that is physically located in Area 1 (refer to Figure 1 on page 19). The redundant component (or train) is located in Area 2. For hot shutdown to be achieved, either injection pump is required for alignment to provide the necessary flow. The control cables for Pump 1 are routed from the Control Room, through Area 2 and terminate in Area 3 (an electrical switchgear area). A fire in Area 2 could cause the loss of remote control of Pump 1 and impact the redundant component (i.e., Pump 2), thus causing both pumps to fail as is (i.e., not running). Assume the Area 2 fire does not impede access to Area 3 and that sufficient time is available to access the switchgear. Under these conditions safe shutdown can be achieved by starting Pump 1 at the emergency control station (i.e., in Area 3 by manually closing the associated breaker). Pump 1 is "free from fire damage" from the standpoint that the pump can be manually controlled at the emergency control stations and thus meets the requirements of Section III.G.1. This type of 'local' control is not considered "Alternate Shutdown" since the pump is being utilized in its normal designed function.

alternate S/D ?

In certain cases, required components and circuitry are located within the same fire area boundary. To protect required circuits & associated within the same fire area, Appendix R provided several protection strategies in Section III.G.2. Any of these options was deemed to provide sufficient protection such that repairs would not be required. For a practical example of this scenario, reconsider the above electrically driven pump. The power

cables for Pump 1 are also routed through Area 2. Thus, a fire in Area 2 could impact the ability to achieve hot shutdown, unless a repair is accomplished (i.e., a new power cable is routed to Pump 1). Therefore, the power cables are required to function to operate the pump and achieve safe shutdown. In this case the power cable for Pump 1 located in Area 2 (i.e., within the same fire area boundary as the redundant component/train) should be protected by one of the options specified in Section III.G.2. Whereas the control cables (discussed above) routed in the areas are not required and protection is unnecessary. In order to ease operator burden (i.e. allow control from the control room), the control circuits could also be protected. However, controlling a component manually (i.e., via handswitch in the control room) is still considered a manual action.

? associate

In some instances, it is neither practical nor feasible to provide the protective features (as specified in Section III.G.2) to components and/or circuitry located within a fire area. In those cases, an alternate method for achieving safe shutdown is allowed by Section III.G.3. The alternative method is in lieu of using the designed redundant systems that may be compromised by a common fire. Consider the above electrically driven pump. If protection by one of the methods described in Section III.G.2 is not feasible, then Section III.G.3 allows the alignment of a pump from a different system (i.e., not normally utilized as an injection pump) to provide the necessary flow with the stipulation that the "alternate" system is physically independent from Area 2.

It has to be different system?

This representation of Section III.G is consistent with the guidance provided in Generic Letter 86-10, in which Enclosure 2, Section 3.1.5 states:

> *To cover the large variation of possible configurations, the requirements of Section III.G were presented in three Parts:*
>
> *Section III.G.l requires one train of hot shutdown systems be free of fire damage and damage to cold shutdown systems be limited.*
>
> *Section III.G.2 provides certain separation, suppression and detection requirements within fire areas;* [emphasis added] *where such requirements are met, analysis is not necessary.*
>
> *Section III.G.3 requires alternative dedicated shutdown capability for configurations that do not satisfy the requirements of III.G.2 or where fire suppressants released as a result of fire fighting, rupture of the system or inadvertent operation of the system may damage redundant equipment.*

This position is substantiated by Inspection Procedure 64100, *Post Fire, Safe Shutdown, Emergency Lighting and Oil Collection Capability at Operating and Near-Term Operating Reactor Facilities,* Appendix A Paragraph 9 which differentiates between manual actions (local and remote) and "Alternative Shutdown". One of the items specified for review includes:

?

> *Plant operating procedures which describe normal hot and cold shutdown from inside the control room, emergency hot and cold shutdown from emergency control stations* <u>*outside and independent of the control room,*</u> [emphasis added] *and shutdown operations which utilize Alternative or Dedicated shutdown capabilities . .*

The need for and acceptance of use of manual actions to comply with the separation requirements of Section III.G is further supported by Appendix R, Section III.J, *Emergency Lighting*. This section of Appendix R, which was one of three sections that were "backfit" by the Commission, requires the installation of emergency light units *in all areas needed for operation of safe shutdown equipment and in access and egress routes thereto*. The Statements of Consideration to Appendix R amplify this sentiment:

> *The need is for lighting that aids the access to equipment and components that must be manually operated by plant personnel to effect [sic] safe plant shutdown during plant emergencies.*

Inspection Procedure 64100 states:

> *a. Verify that the plant emergency lighting capabilities meet the following requirements of Section III.J of Appendix R.*
>
> *1. Required Areas for Emergency Lighting*
>
> *(a) control room (unless specifically excluded as a requirement through exemption or deviation)*
> *(b) other critical area(s) and access routes which require illumination to* <u>*allow manual safe shutdown equipment operation*</u> *[emphasis added] or the monitoring of safe shutdown indications*

Inspection Procedure 71111.05, *Fire Protection* Section 7, *Emergency Lighting,* states in part:

> *Review emergency lighting provided, either in fixed or portable form, along access routes and egress routes, at control stations, plant parameter monitoring locations, and at manual operating stations:*

The requirement for emergency lights in non-Alternate Shutdown areas was emphasized in Information Notice (IN) 95-36, *Potential Problems With Post Fire Emergency Lighting.* This IN highlighted the failure of Licensees to install light units in areas where manual actions are credited and control room evacuation is not required.

The NRC guidance indicates that reliance on manual operations of equipment independent of the affected fire area is a legitimate method for ensuring that one train of required safe shutdown components is "free of fire damage." This method of complying with Section III.G.1 does not require further protection features of components in the fire area (other than consideration of associated circuits), nor does it constitute the implementation of an "Alternate Shutdown" methodology.

LICENSING BASIS

In the early 1980s, ANO performed a review of each fire zone with regards to compliance with Appendix R. The results of this review were submitted to the staff in a letter dated July 1, 1982, (0CAN078202), which states in part:

> *...The ANO fire zones were reviewed for their compliance to 10CFR50.48 and 10CFR50 Appendix R. The review was structured to incorporate the recommendations, clarifications, and evaluation criteria of Generic Letter 81-12. Our submittal also considers the staff's positions and perspectives advanced in its discussions with the Nuclear Utility Fire Protection Group during the period of December 1981 to March 1982, and reflected in the Nuclear Utility Fire Protection Group's letter of March 16, 1982, to Richard H. Vollmer, Director, Division Engineering.*

The review considered that the previously developed Fire Hazards Analysis (FHA) may not provide "train separation" (i.e., separation of redundant components into separate fire areas bounded by fire barriers) as required by Appendix R, Section III.G.1. The methodology of the review was described in the introductory section of the submittal and was described as follows:

1. *The original Fire Hazards Analysis was used as a basis for this review. Fire zones containing safe shutdown components and any redundancies thereof were identified.*
2. *A separate evaluation of associated circuits was used to identify circuits of concern.*
3. *Modifications made to the plants subsequent to issuance of the original FHA were reviewed and incorporated where applicable.*
4. *As the definition of fire zones in the original FHA did not require zone boundaries of 3-hour fire rating, adjacent zones as well as all zones within 20 feet of the zone in question were considered. Additional redundancies were identified by this comparison.*
5. *Additional redundancies identified in 4 above were evaluated for their effects on safe shutdown capabilities.*
6. *In certain cases, credit for manual operation of equipment was taken if controls (and power for valves) could possible* [sic] *be damaged by a fire. Such credit was taken only if:*

a. *the component to be operated is not located in the affected fire zone, although the cable may be damaged by fire;*
b. *sufficient time is available to perform the required manual actions; and*
c. *personnel are available, beyond the fire brigade and minimum operations shift crew limitations, to perform the manual actions.*

7. *For redundancies that were still identified as potential safe shutdown concerns following the above review, specific physical separation, barriers, intervening combustibles, and suppression systems were evaluated to determine compliance with Section III.G of Appendix R.*
8. *For those redundancies remaining as a potential safe shutdown concern following 7 above, alternate means for accomplishing the necessary function was reviewed."*

The above methodology clearly stated that manual operation of equipment located outside the zone of concern would be considered (Paragraph 6) prior to considering the installation of the fire protection features described in Section III.G.2 (Paragraph 7).

Table 1.0 of the submittal provided a summary compliance status of each fire zone. Zone 98-J was noted as requiring an exemption. Zone 99-M was noted as needing a modification.

Section 2 of the submittal described the zones that were in compliance with Appendix R and provided a basis statement. Zones 38-Y, 46-Y, 47-Y, 67-U, 68-P, 79-U, 112-I, 128-E, 149-E, 170-Z, 2084-DD, 2097-X, 2111-T and 2155-A were all listed as zones that required some type of manual operation to achieve safe shutdown conditions.

Section 3 of the submittal described the modifications that were required for each zone to comply with Appendix R. For Zone 99-M, modifications were to be performed (these have since been completed) to the circuitry for the swing service water pump and swing make-up pump (modification would allow the swing pump to be powered from either red train or green train power, (whichever is unaffected) by isolating the connection to the affected switchgear).

Section 4 of the submittal provided the basis for ANO's requests for exemptions from Appendix R requirements. Originally, Zone 98-J included the red DC equipment room (now classified as Zone 110-L). The DC equipment room was connected to corridor 98-J via an open doorway. The exemption noted that Zone 98-J was predominately green train but that some red train circuits were routed through the zone. The red train circuits were primarily associated with the red DC equipment room and were routed in conduit. The evaluation of the zone stated the following:

> *The 'red' division cabling located in the corridor that is required for safe shutdown.* [emphasis added] *will be wrapped in a 1-hour fire barrier. The circuits involved are the power supplies to the RS panels which are located in the*

control room. With the suppression system in this area and the addition of the 1-hour fire barrier, the corridor portion of this zone will comply with Appendix R

As noted above 1-hour fire barriers will be added to enclose those cables associated with the RS panel power.

Note that the RS designation is not an acronym for "remote shutdown." It is a 120VAC-instrument power distribution panel whose function is necessary for the achievement of hot shutdown should a fire occur in fire zone 98-J.

The evaluation included details of the fire protection features associated with the DC equipment room and the related exemption request to provide a three-hour barrier separating the corridor portion of the zone. This exemption request was eventually withdrawn when a three-hour barrier was installed between the corridor and the red DC equipment room. After the submittal was initially reviewed by the Staff, a meeting was held on August 31, 1982, to discuss various open items. The list of discussed questions included the following:

2. *For the fourteen fire zones that the licensee indicates are in full compliance with Appendix R, but require some sort of manual or non-routine operation, the licensee should describe the safe shutdown equipment and cables that would be effected [sic] by a fire and the specific operator actions that would be required to obviate these effects.*

By letter dated September 3, 1982, the NRC provided a summary of the meeting. Concerning Question 2, the following was noted:

2. *AP&L provided a response in Enclosure 3. In addition to what was provided in Enclosure 3 the staff wanted to know how much time an operator has before there would be an unrecoverable situation. That* [sic] *staff also wanted to know if there would be enough people available to operate the plant in the event of a fire.*

Enclosure 3 to the letter detailed the local manual actions that would be performed in twelve of the identified zones. By letter dated October 5, 1982 (0CAN108203), AP&L formally responded to the questions presented in the August 31 meeting. Question 1 discussed the methodology used to perform the compliance analysis. The response addressed manual actions and reiterated the three conditions specified in the July 1 submittal that must be met prior to crediting a manual action for achieving safe shutdown. The response also described a practical example wherein local manual operation of the Service Water (SW) sluice gate valves was credited in a zone classified as "Appendix R compliant." The response to Question 2 reiterated what had been presented in the August 31 meeting (i.e., Enclosure 3 to 1CAN098201) with additional information concerning

the two zones that were not addressed in the September 3 letter plus a discussion of how much time was available to perform the specified local manual operations.

As the NRC completed their initial Appendix R compliance audits, it became clear that the industry's interpretation of Appendix R was not completely consistent with the NRC's interpretation on certain issues. In subsequent correspondence and dialogue with the NRC, the issuance of Generic Letter 83-33, *NRC Positions On Certain Requirements Of Appendix R To 10 CFR 50,* and feedback from NRC and the industry workshops, it became clear that the ANO safe shutdown analysis would require revision. The previous analysis had been performed on a Fire Zone basis rather than the Appendix R Fire Area basis. While the new guidance documents clarified many aspects of Appendix R, no change in the previous position concerning manual actions was specified. As a result of the new guidance, ANO completed an Appendix R reanalysis (on a "Fire Area" basis rather than. a "Zone" basis), which was submitted to the NRC in August 1984. The cover letter that accompanied the submittal states:

> *This document updates and supercedes (the analysis portion) of our July 1, 1982, Appendix R submittal by incorporation of NRC guidance (provided in Generic Letter 83-33, IE Information Notice 84-09, and the management positions from the April 26, 1984, Region IV Workshop) into our methodology. It is provided in response to your June 17, 1983, (0CNA068312) letter.*

Prior to completing the analysis and subsequent submittal, ANO met with personnel from the NRC staff to discuss compliance with Appendix R. The NRC's meeting summary stated:

> *The Licensee presented several examples of the fire area analysis performed to date to illustrate the methodology used in its reanalysis. The staff commented that the methodology used appeared to be consistent with the staff's positions.*

The detail in ANO's 1984 submittal concerning the methodology for determining compliance was not as extensive as that presented in its 1982 submittal since it had been previously accepted. Reference was made to the 1982 submittal and summary statements (as described below) were made.

As in ANO's 1982 submittal, the criteria used for when credit for manual action could be taken were carefully described, although at this time the description was specific to valve manipulation. Section III.B of the submittal (Initial Conditions and Assumptions) contained the following:

> *The reanalysis of ANO-1 and 2 was performed under the initial conditions defined by Appendix R to 10CFR50. Those conditions are consistent with those utilized in AP&L's original Appendix R compliance submittal dated July 1, 1982*

(0CAN078202), and subsequent correspondence dated November 11, 1982 (0CAN118210). The following briefly summarizes the conditions assumed.

Where adequate time is available, and the valve is not physically located in the vicinity of the postulated fire, credit is taken for manual operation of manually operable valves.

Section III.F of the submittal (Separation Criteria) contained the following:

All systems necessary for achieving hot and/or cold shutdown must be <u>*operable*</u> [emphasis added] *given a fire in any single fire area of the plant. The method of assuring operability of any component in a given system is to determine whether it is sufficiently protected or separated from the postulated fire. The separation criteria to be used are specified in Appendix R to 10CFR50, Section III.G and in clarification of that regulation presented in Generic Letter No. 83-33, IE Information Notice No. 84-09.*

The reanalysis addresses Fire Area I that includes fire zones 98-J and 99-M as well as Zone 112-I. The reanalysis states on page 30,

Safe Shutdown Capability

This area contains redundancies in the form of indication instrumentation, the vital AC instrumentation panels cabling, and in the form of power cables associated with the "swing" and "green" Makeup and Service Water pumps. The "red" switchgear and 4160v bus, diesel fuel transfer pump, inverters and 125v DC station battery are available to supply power in the event fire disables the "green" components.

Modifications

The west wall of Zone 112-I, and the floor and ceiling of Zones 98-J and 112-I will be upgraded to a three-hour fire resistant rating. One-hour rated fire barriers have been provided to enclose a circuit powering the "red" RS panel, RS1. This conduit is further separated from redundant components by the deluge water spray system in Zone 98-J. Additionally, at least one channel of indication cabling has been separated from the other channels by one-hour barriers or 20 feet. The Safety Parameter Display System (SPDS) installed in the Control Room will also provide indication of at least one channel of required parameters if a fire occurring in this area eliminates other indications.

Exemption Requests:

One exemption is requested for this area

Omission of three-hour rated coatings for structural steel supporting the ceiling of Zones 98-J and 112-I.

Fire Area I is a "green" train fire area. ANO's 1984 reanalysis did not identify the need to protect any red train cabling located in this area with the exception of the power supply cabling for the red train instruments. As in the original analysis, the affected red train circuits were evaluated to determine whether functionality was required. The majority of the red train circuits are for remote control of safe shutdown circuits. ANO has performed an evaluation that determined sufficient time was available to manually operate any required component for which remote operation could be lost due to a fire. Consequently, with the exception of the power circuits for the red train instrumentation, none of the red train circuits located in Area I are necessary to achieve safe shutdown (nor could damage to these circuits cause mis-operation of safe shutdown equipment such that unrecoverable conditions occur). The required red train components are located in other fire areas and are thus separated from zones 98-J and 99-M by boundary fire barriers that meet the separation criteria of Section III.G.1 (i.e., "free of fire damage").

To clarify this position, consider a normally closed manual valve that must be opened to achieve safe shutdown. Licensees could provide emergency lighting (per Appendix R, Section J), ensure that access to the valve is available (e.g., platforms), ensure that sufficient time is available (before unrecoverable conditions occur) and ensure that sufficient personnel are available (outside of the fire brigade) to open the valve. With these criteria satisfied, the licensee could consider the flow path as a redundant safe shutdown path and would credit the path for safe shutdown in the event the component (as well as the ingress/egress path) is separated from the fire by fire area boundaries. Under these conditions, the manual valve would comply with the separation requirements of Section III.G.1. The position taken by ANO is that without motive power or remote control, an MOV is equivalent to a manual valve (provided associated circuit concerns are considered). Where credit has been taken for the manual operation of an MOV at ANO, the above listed criteria have been verified. Furthermore, mis-operation of the valves (due to fire effects on the associated cables) has been evaluated if relied upon for safe shutdown. The evaluation has determined that manual operation of the credited MOVs is achievable. Consequently, MOVs that may have associated cables routed through zones 98-J and/or 99-M meet the separation requirements of Section III.G.1, and the requirements of Section III.G.2 do not apply. Similar arguments can be made for the other components in which manual operation is credited.

Note that even if the fire did not affect the remote control cables, ANO does not credit the automatic operation of any electrically controlled system to achieve safe shutdown. In all cases, operation of the component would be manually controlled either in the control room (i.e. remotely via handswitch) or locally.

During the spring of 1987, the NRC performed an Appendix R compliance audit at ANO. The inspection team questioned the ability to perform certain manual actions occurring within a fire area (i.e., to comply with Section III.G.2). The question was resolved and documented in the ANO inspection question/answer database. This was reflected in IR 87-14 wherein no findings were noted concerning manual actions.

CONCLUSION

10CFR50, Appendix R Section III.G.1.a states,

> *One train of systems necessary to achieve and maintain hot shutdown conditions from either the control room or emergency control station(s) is free of fire damage.*

A fire in Fire Area I (i.e., Zones 98-J and 99-M) may impact green train components. The capability to control some red train components remotely is also affected by a fire in the area. The red train components and the ability to control these components locally are physically separated from Fire Area I. Therefore, the red train components and the local control capability of these components are "free of fire damage" and meet the separation requirements of Section III.G.1. The red train circuitry (with the exception of the power cabling for the RS instrument power panels) is not required to achieve safe shutdown and does not require separation (per the requirements of Section III.G.2) from green train circuitry because the ability to remotely control the red train components is not required.

Figure 1

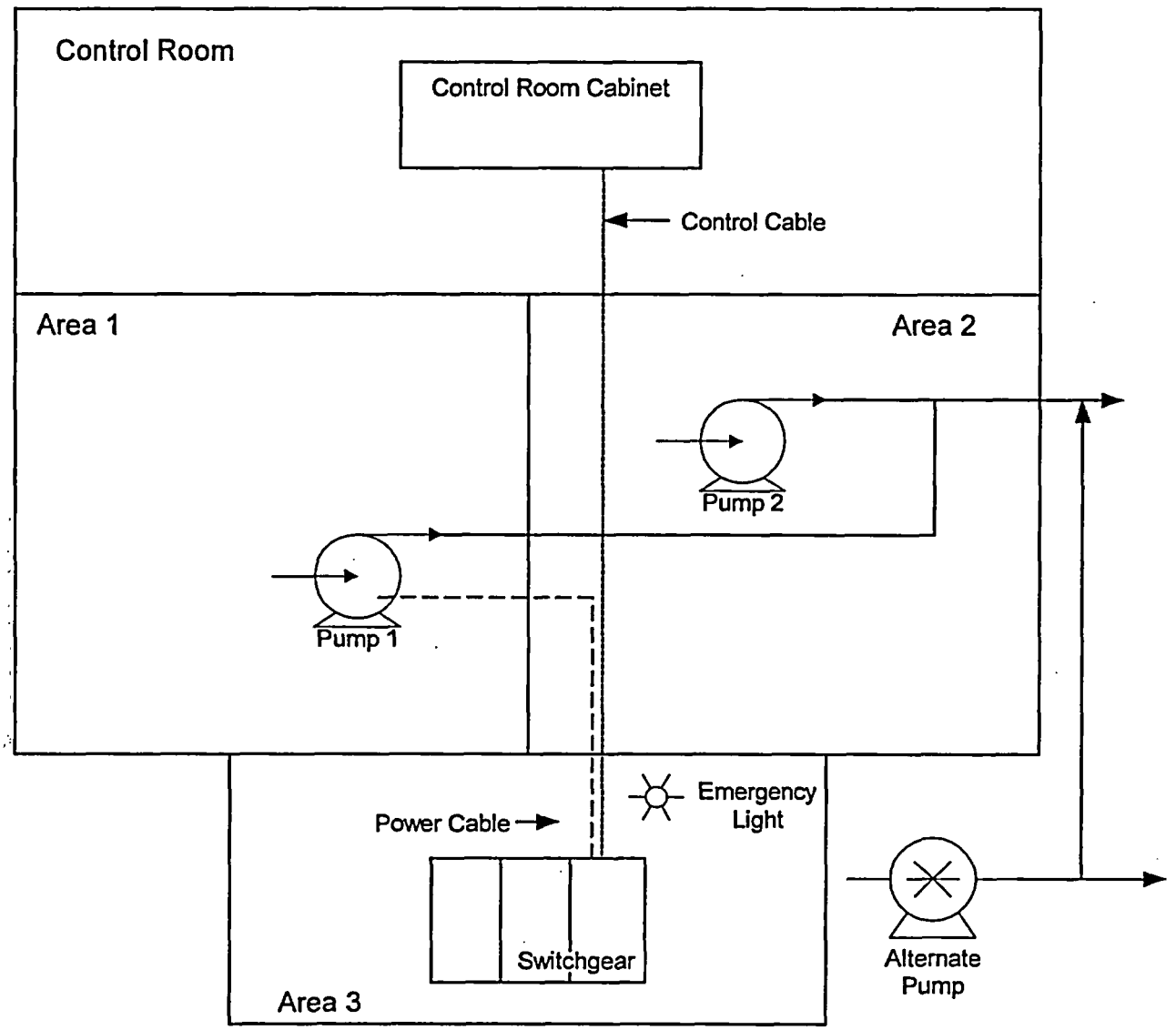

The control cable for Pump 1 would not require protection in Area 2, since the motive power can be provided by manually closing the breaker at the switchgear in Area 3. This arrangement satisfies the requirements of Section III.G.1 to ensure that one train of required components is "free of fire damage".

The power cable for Pump 1 would require protection in Area 2, since the motive power cannot be supplied unless repairs are made to the damaged cable. One of the 3 options specified in Section III.G.2 would be provided to ensure one train of required components located within a fire area is "free of fire damage".

If it were not feasible to provide one of the three options specified in Section III.G.2 for the power cable, then an Alternate Shutdown method would be to utilize the Alternate pump that normally provides a different function.

ATTACHMENT 2
INDUSTRY GUIDANCE/CORRESPONDENCE

The concept of utilizing manual actions to accomplish safe shutdown conditions when a fire could impact related circuitry is a common practice used throughout the industry. The majority of commercial nuclear facilities credit operator actions in areas other than those classified as "Alternate Shutdown" areas. In general, actions performed in areas outside of the fire area of concern were accepted without benefit of the exemption process. In some cases, where actions were performed within the fire area of concern, specific exemptions were obtained.

BWROG SAFE SHUTDOWN ANALYSIS

The practice of performing operator actions is reflected in topical report GE-NE-T43-00002-00-02, Appendix F, Revision 0, *Generic Guidance for BWR Post-Fire Safe Shutdown Analysis*, dated November 1999. The report includes a definition of "free of fire damage" which clearly indicates that a component is "free of fire damage" if it can perform it's required function automatically or via manual operation (remote or local). The NRC review of the report resulted in a Request for Information (RAI), which included comments received from Sandia National Laboratories. Concerning Appendix F, the RAI identified a concern regarding the capability to perform a manual action <u>within the same fire area</u>, thus tacitly approving manual actions outside the fire area of concern. In addition, Sandia was tasked with auditing the agreements made between the NRC staff and the Boiling Water Reactor Owners Group (BWROG), during an August 1999 meeting concerning the methodology.

Agreement 4 addressed "Free of Fire Damage". Sandia's review (with NRC concurrence) states:

> *Commentary*
>
> *The BWROG Committee provides the following definition for the term <u>Free of Fire Damage</u> in Section 4.0:*
>
> *The structure, system or component under consideration is capable of performing its intended function during and after the postulated fire, as needed. It may perform this function automatically, by remote control, or by manual operations.*
>
> *The first sentence of the above definition is a word-for-word duplicate of the NRC definition provided in Generic Letter 86-10. The second sentence of the definition appears to be a clarification of the various means by which the intended function may be initiated and controlled, and does not in any way reduce the inherent requirement or intent of NRC's definition.*

Agreement 10 addressed manual actions as:

The final BWROG circuit analysis methodology document will identify manual action considerations to be addressed to ensure comprehensive and effective analysis of both redundant train and alternate/dedicated post-fire safe shutdown capabilities such as:

By requesting the inclusion of specific guidance concerning manual actions. The NRC has clearly implied (if not approved) the acceptance of manual actions for both redundant and alternate shutdown areas.

OTHER INDUSTRY INFORMATION

In the following paragraphs, approvals for the use of manual actions were specified in NRC reports to various utilities. These approvals confirm the long-standing practice of crediting manual actions for achieving safe shutdown.

On May 27, 1987, Toledo Edison formally responded to an RAI concerning the fire protection program at Davis-Besse. Several question responses described the manual actions that would be performed in non-alternate shutdown locations. On June 6, 1988, Toledo Edison provided the following additional information concerning manual actions:

> *To substantiate the acceptability of AB 1203.02 Toledo Edison committed to identify the manual operator actions for a fire in areas other than the Control Room, the time to implement these actions, and the time before an unrecoverable plant condition would occur if the associated manual operator action(s) was not performed. The acceptance criteria and evaluation results are discussed below.*
>
> *Acceptance Criteria*
>
> *Based on NRC guidance provided in the February 17-18, 1987 meeting, the time for implementation of the manual operator actions is considered to be acceptable if the associated unrecoverable plant condition would not occur:*
>
> 1) *for at least 1 hour for manual operator actions to be completed inside the area containing the fire, or*
> 2) *for at least 30 minutes for manual operator actions to be completed outside the area containing the fire. The 1-hour criteria would also apply to manual operator actions where access and egress routes are through the area containing the fire.*
>
> *Plant A committed to justify the acceptability of those manual operator actions that did not satisfy this NRC guidance.*

On February 3, 1993, the New York Power Authority received a NRC report documenting resolution of issues identified by Special Team Inspection 50-333/92-14.

DET Item 3 noted that there was a lack of guidance to the operators in the fire response procedures concerning the ability to achieve safe shutdown. To resolve the issue, detailed procedural guidance was provided the operators on the use of manual actions for numerous non-alternate shutdown areas. The inspection report concluded:

> *AOP-28 lists the actions required to operate or isolate the optional and conditional systems for each fire area. The procedure provides written guidance to prevent and detect spurious actuation of plant equipment. The significantly revised procedure should ensure that the damaged equipment does not affect safe shutdown while maximizing operational flexibility. The licensee's resolution of the DET concern was adequate.*

NRC INSPECTION CRITERIA

In the Reactor Oversight Program, (ROP) Inspection Module 71111.05, *Fire Protection,* Section 02.03, *Triennial Inspection, paragraph b.1 Systems Required to Achieve and Maintain Post-fire Safe Shutdown,* states in part "to the extent that it is confirmed that a postulated fire in an area under consideration can cause the loss of offsite power, verify that hot and cold shutdown from outside the control room can be achieved and maintained with off-site power not available." Additionally, paragraph 02.03.b.2, *Fire Protection of Safe Shutdown Capability,* states in part: *Evaluate licensee operator recovery action capabilities, plans and timing estimated for smoke removal, dewatering of spaces, controlled re-energization, and return to service of equipment in fire affected areas for fires in each plant area under consideration.*

Since the ROP was implemented, several NRC inspection teams at pre and post Appendix R facilities reviewed the use of operator recovery action capabilities. The results of inspections performed per Module 71111.05, Section 02.03.b.2, *Fire Safe Shutdown Analysis,* are:

1. Fort Calhoun, Inspection Report IR 00-01, dated May 9, 2000 states:

   .5.a *Fire Protection of Safe Shutdown Equipment*

   For each of the selected fire areas, the team reviewed the licensee's safe shutdown analysis ... to ensure that at least one post-fire safe shutdown success path was available in the event of a fire. This included a review of manual actions required ... to achieve and maintain hot shutdown conditions.

2. Callaway, Inspection Report IR 00-13, . dated October 30, 2000 states,

   .2.a *Fire Safe Shutdown Analysis*

   For each of the selected fire areas, the team reviewed the licensee's safe shutdown analysis ... to ensure that at least one post-fire safe shutdown success path was available and maintain hot shutdown conditions and to make the necessary repairs to reach cold shutdown within 72 hours.

3. Diablo Canyon, Inspection Report 00-03, dated May 19, 2000 states,

   .2.a Fire Protection Safe Shutdown Analysis

   For each of the selected fire areas, the team reviewed the licensee's safe shutdown analysis ... for each fire area, to ensure that at least one post-fire safe shutdown success path was available in the event of a fire. This included a review of manual actions required to achieve and maintain hot shutdown conditions and to make the necessary repairs to reach cold shutdown within 72 hours.

4. Lasalle, Inspection Report IR 01-06, dated July 17, 2001 states,

   .2 a. Fire Protection of Safe Shutdown Capability

   For each of the selected fire areas, the inspectors reviewed the licensee's safe shutdown analysis to ensure that at least one post-fire shutdown success path was available in the event of a fire. This included a review of manual actions required to achieve and maintain hot shutdown conditions and make the necessary repairs to reach cold shutdown within 72 hours. The inspectors also reviewed procedures to verify that adequate direction was provided to operators to perform these manual actions. Factors, such as timing, access to the equipment, and the availability of procedures, were considered in the review.

Personnel at each of these facilities were contacted to verify that the areas inspected were not classified as "Alternate Shutdown Areas" and there are no approved exemption requests for the use of manual actions. In these cases, the inspection teams reviewed non- "Alternate Shutdown" fire areas that relied upon manual actions to achieve safe shutdown.

INDUSTRY SURVEY

An industry survey conducted by the Nuclear Energy Institute (NEI) in July 2001 revealed that of the 37 respondents (both pre- and post- Appendix R plants), 33 facilities (some multi-unit) credit manual actions to restore components that are not separated

from redundant circuitry by one of the methods specified in Appendix R, III.G.1 and III.G.2 without exemption.

CONCLUSION

Based on the above guidance, docketed information and industry survey results, it is clear that for fires outside the control room, the use of manual actions to restore equipment outside a fire area is, and has been a standard industry practice for achieving safe shutdown. This position is further supported by existing NRC inspection guidance that instructs inspectors to review operator recovery action capabilities that are documented in individual licensee Triennial Fire Protection Inspection Reports.