Official Transcript of Proceedings ACRST-3256

NUCLEAR REGULATORY COMMISSION

Title: Advisory Committee on Reactor Safeguards
Plant License Renewal Subcommittee

Docket Number: (not applicable)

PROCESS USING ADAMS
TEMPLATE: ACRS/ACNW-005

Location: Rockville, Maryland

Date: Tuesday, November 4, 2003

Work Order No.: NRC-1153 Pages 1-190

NEAL R. GROSS AND CO., INC.
Court Reporters and Transcribers
1323 Rhode Island Avenue, N.W.
Washington, D.C. 20005
(202) 234-4433

TR04

1 UNITED STATES OF AMERICA

2 NUCLEAR REGULATORY COMMISSION

3 + + + + +

4 ADVISORY COMMITTEE ON REACTOR SAFEGUARDS

5 (ACRS)

6 PLANT LICENSE RENEWAL SUBCOMMITTEE

7 + + + + +

8 TUESDAY,

9 NOVEMBER 4, 2003

10 + + + + + +

11 ROCKVILLE, MARYLAND

12 + + + + +

13

14 The Subcommittee met at the Nuclear Regulatory

15 Commission, Two White Flint North, Room T2B3, 11545

16 Rockville Pike, at 12:30 p.m., Mario V. Bonaca,

17 Chairman, presiding.

18

19 COMMITTEE MEMBERS:

20 MARIO V. BONACA, Chairman

21 F. PETER FORD, Member

22 GRAHAM M. LEITCH, Member

23 STEPHEN L. ROSEN, Member

24 GRAHAM B. WALLIS, Member

25

1 ACRS STAFF PRESENT:

2 MARVIN D. SYKES

3

4 NRC STAFF PRESENT:

5 RUSSELL J. ARRIGHI, NRR

6 BARRY ELLIOT, NRR

7 FRANK GILLESPIE, NRR

8 SAM LEE, NRR

9 MICHAEL MODES, Region I

10 JONATHAN ROWLEY, NRR

11

12 ALSO PRESENT:

13 GERRY GEIKEN

14 GEORGE HERRICK

15 JARRED JACKSON

16 MARY ELLEN McGRAW

17 ROBERT C. MECREDY

18 DAVID WILSON

19 GEORGE WROBEL

20

21

22

23

24

25

1 A-G-E-N-D-A

19

20

21

22

23

24

25

P-R-O-C-E-E-D-I-N-G-S

12:32 a.m.

CHAIRMAN BONACA: The meeting will now come to order. This is a meeting of the Advisory Committee on Reactor Safeguards, Subcommittee on Plant License Renewal.

I am Mario Bonaca, Chairman of the Subcommittee.

ACRS members in attendance are Graham Wallis, Peter Ford, Steve Rosen and Graham Leitch.

Marvin Sykes is the designated federal official for this meeting.

The purpose of this meeting is to discuss the license renewal application for the Robert E. Ginna nuclear power plant and the associated NRC separate evaluation report with open items.

During this meeting we will hear presentations by the applicant, Rochester Gas and Electric and the NRC Office of Nuclear Regulatory Regulation.

The Subcommittee will gather information, analyze relevant issues and facts and formulate report positions and actions as appropriate for deliberations by the full Committee.

1 The rules for participation in today's
2 meeting have been announced as part of the notice
3 of this meeting previously published in the *Federal*
4 *Register* on October 22, 2003. We have received no
5 other written comments or requests for time to make
6 oral statements from members of the public regarding
7 today's meeting.
8 A transcript of the meeting is being
9 kept, and will be made available as stated in the
10 *Federal Register* notice.
11 It is requested that speakers first
12 identify themselves and then speak with sufficient
13 clarity and volume so that they can be readily
14 heard.
15 We will now proceed with the meeting,
16 and I call upon?
17 DR. LEE: Yes. My name is Sam Lee.
18 CHAIRMAN BONACA: Lee.
19 DR. LEE: I am the Section Chief in the
20 License Renewal Program. Dr. PT Kuo, Program
21 Director, she is not able to here today. And we
22 expect our Deputy Division Director.
23 CHAIRMAN BONACA: Mr. Gillespie?
24 DR. LEE: Mr. Frank Gillespie, he should
25 be here shortly.

1 CHAIRMAN BONACA: Okay. But you can
2 start the meeting?
3 DR. LEE: I will start. I would like to
4 you know, I guess, for ACRS continue support of the
5 license renewal activities.
6 And there's a lot of activity going on
7 in License Renewal. I guess, about a half an hour
8 ago Jim Dyer just signed the renewal license for
9 Fort Calhoun. So now we have, I guess, with that 21
10 approved units for license renewal and 16 under
11 review.
12 CHAIRMAN BONACA: Okay.
13 DR. LEE: With that today, the purpose
14 today is to discuss the staff review of the Ginna
15 application for license renewal. And the Project
16 Manager is Russ Arrighi, and he is supported by John
17 Rowley. And we have eight open items, and John is
18 going to go over the status with you.
19 And I guess we will turn over to RG&E,
20 the licensee, to make their presentation.
21 MR. WROBEL: Shall I start?
22 DR. LEE: Yes.
23 MR. WROBEL: Okay. My name is George
24 Wrobel. I am the license renewal project manager
25 for Ginna Station. I'd like to have the other

1 people that worked on the license renewal project
2 introduce themselves from RG&E.
3 MR. HERRICK: George Herrick, license
4 renewal engineer from RG&E.
5 MR. MECREDY: Bob Mecredy, Vice
6 President of Nuclear Operations, RG&E.
7 MR. WILSON: David Wilson, license
8 renewal engineer at RG&E.
9 MR. GEIKEN: Gerry Geiken, general
10 engineer at RG&E.
11 MS. McGRAW: Mary Ellen McGraw,
12 mechanical engineer at RG&E.
13 MR. JACKSON: Jarred Jackson, electrical
14 engineer support at RG&E.
15 MR. WROBEL: Thank you.
16 This is the plan we're talking about,
17 it's the review. The contents of today's
18 presentation with RG&E. We are going to go over the
19 background and history of the plant a little bit.
20 Talk about some of the unique features, issues that
21 are in the works now. Some current issues.
22 MR. LEITCH: Just while we're getting
23 that set up, George, I was looking at the
24 photograph. It doesn't show so well on the one that
25 you have, but there is a odd looking building, I

1 guess, in the foreground of the picture. I was just
2 curious as to what that is? It's a brick building,
3 is it? I was just curious as to what --
4 MR. WROBEL: The simulator building is
5 here.
6 MR. LEITCH: I was asking about the one
7 to the right.
8 MR. WROBEL: That's the training center.
9 MR. LEITCH: Oh, that's the training
10 center?
11 MR. WROBEL: That's the beginning of the
12 training center. There's been an addition put on
13 since then.
14 MR. LEITCH: I see.
15 MR. MECREDY: That was the original
16 visitor center, information center on the site. The
17 first structure on the site.
18 MR. LEITCH: Okay. Thank you. Just a
19 curiosity question.
20 MR. WROBEL: Okay. We thought we'd talk
21 about some of the current issues of interest right
22 now. I know there's a lot of the interest in the
23 cracked vessel head and the bottom head inspections
24 that we did this past outage. And then some issues
25 on the containment recirculation sump.

1 If there's any other current issues that
2 could be considered, we can talk about those also.
3 I want to talk a little bit about how we
4 put the licensed renewal application together. And
5 then talk about some of the specific results,
6 particularly in the TLAAs programs. We have several
7 commitments that we have made that we'll implement
8 in the future. And we do have a couple of open
9 items to be talked about mostly by the NRC.
10 So, back to the background and history.
11 Most of you probably know, it's a Westinghouse two
12 loop 1520 megawatt PWR, upstate New York.
13 The initial license was granted in
14 September 18, 1969. We were one of the Systematic
15 Evaluation Program plants. We'll talk about that on
16 the next slide a little bit.
17 We did have our provisional operating
18 license to full-term operating license that was as a
19 result of the Systematic Evaluation Program. It
20 started in '72 and ended in '84; a 12 year process
21 then. So license renewal seems pretty quick now.
22 We also had our CP-OL recapture that was
23 done. Construction permit was 41 months for Ginna.
24 And that changed our operating license from 4-25-06
25 to the current 9-18-09.

1 MR. LEITCH: George, I'm a little
2 confused by the history, I guess. I don't quite
3 understand the process that was used at that time.
4 Basically my question is the 40 years dates from
5 1969, not 1984, is that correct?
6 MR. WROBEL: That's correct.
7 MR. LEITCH: Yes.
8 MR. WROBEL: The 1984 was when we got
9 our full-term operating license. We were operating
10 under a provisional operation license, which is how
11 we got into the Systematic Evaluation Program in the
12 first place.
13 MR. LEITCH: I see.
14 MR. WROBEL: So we had, I think it was
15 year-to-year, we got the provisional operating
16 license extended.
17 MR. LEITCH: Oh, okay.
18 MR. WROBEL: And then since then -- so I
19 guess we could have just stayed with that forever,
20 continued forever.
21 MR. LEITCH: Yes. Yes.
22 MR. WROBEL: And the recapture was just
23 the construction period.
24 MR. LEITCH: Construction period, yes.
25 MR. WROBEL: Some of the major projects

1 that we've had Ginna Station, there were a lot of
2 them before '96. But the more recent ones, we
3 replaced our steam generators in 1996. One of the
4 side benefits of that was that we were able to
5 reduce our TF, which has helped in subsequent issues
6 from 573½ down to 561 currently that we're operating
7 at.
8 We were, I believe, the first
9 Westinghouse plant to convert to improved standard
10 technical specifications. We did that in 1996 also.
11 DR. WALLIS: Did you have power uprates,
12 totally new ones?
13 MR. WROBEL: The only power uprate that
14 we had was from the initial 1300 megawatts in 1520.
15 We have not had one since then.
16 In 1999 as part of the reactor vessels
17 internal inspection, we did a baffle-bolt
18 inspection. We inspected a large number of the
19 baffle bolts and we replaced enough to -- there was
20 plant specific analysis done by Westinghouse and we
21 added a lot of baffle variables to the internals.
22 And then this year we just finished
23 replacing our reactor vessel head.
24 CHAIRMAN BONACA: This thing with the
25 baffle-bolt.

1 MR. WROBEL: Okay.

2 CHAIRMAN BONACA: You did that as a

3 replacement. Now, if I remember in the application

4 you stated you don't have to make any further

5 inspections of the bolts?

6 MR. WROBEL: Well, we feel at this point

7 that with the number of bolts that we put on and the

8 very, very small number of failures that we

9 experienced, I believe it was less than one percent

10 of the bolts that we evaluated actually were

11 degraded.

12 Between that and the fact that we have

13 link-before-break completed for all of our 10 inch

14 lines. So the next larger line that does not have

15 link-before-break analysis on the primary system is

16 a 4 inch line. So the forces resulting from that

17 with the number of new bolts we have and the number

18 of bolts that we inspected that were good, we don't

19 believe that we need to do any additional work in

20 baffle-barrel bolt inspections and/or replacement.

21 That's our current position.

22 CHAIRMAN BONACA: So no further

23 inspections? And we'll hear from the staff later

24 on? Yes. During your presentation, that's fine.

25 MR. WROBEL: Okay.

1 CHAIRMAN BONACA: Let's remember that.
2 Okay.
3 MR. WROBEL: Okay. Again, we replaced
4 our reactor vessel head with the Inconel 690
5 penetrations including -- and we also added new
6 control rod drive mechanisms. That was just
7 completed in 2003, last month.
8 And I guess it's not a
9 background/history, but we do anticipate selling the
10 plant in the middle of next year.
11 I said I wanted to talk a little bit --
12 MR. LEITCH: Has a deal been struck and
13 it's just a matter of implementation or is --
14 MR. WROBEL: It's not struck yet. The
15 bids are due mid-November.
16 MR. LEITCH: I see. Thank you.
17 MR. WROBEL: Systematic Evaluation
18 Program has got an interesting program that
19 developed.
20 All of the plants that have original
21 operating licenses and I believe a couple of the
22 older plants that might have had full term operating
23 license, we're evaluated under what's called the
24 Systematic Evaluation Program which began in 1977.
25 The project there was, was to review Ginna against

1 the then current Standard Review Plan, which is
2 75087. If you look at that compared to the current
3 0800, they're pretty comparable. So it's almost a
4 review against the current Standard Review Plan.
5 It wasn't against the whole plan. There
6 were 92 risk topics that were reviewed. Sometime or
7 later, whenever, if you want to know what the topics
8 were, I can highlight those also. But there was
9 pretty extensive review of the plant against the
10 Standard Review Plan.
11 And what happened there is that we
12 really ended up with a very good short licensing
13 basis. We got SERs on 92 topics, and some of the
14 topics like seismic had multiple SERs written
15 against them because there were structures, systems,
16 tanks. So our FSAR was substantially upgraded with
17 all the SERs that we out of the Systematic
18 Evaluation Program. So it was a major benefit. It
19 helped us define our current licensing basis and,
20 therefore, helped us to define which structure
21 systems and components would be in the scope of
22 license renewal because we had such good
23 documentation. It made scoping much easier.
24 CHAIRMAN BONACA: The reason why I asked
25 the question to put on the agenda was, I'd like to

1 understand what changes you have to make physically
2 to the plant, if any. For example, other SEP
3 plants, they were plants that started up without any
4 CCS system, without low-pressure injection systems.
5 You know, Conn Yankee was one. Without safety
6 injection tanks.
7 MR. WROBEL: Yes. We kind of lucked out
8 there. We had all of those systems, but we did make
9 some improvements in the systems. Many of the
10 changes that we made were related to natural
11 phenomena.
12 The Ginna Station design for tornadoes,
13 for example, we don't get many. We're stuck with
14 snow a lot, but we don't get many tornadoes and so
15 the tornadoes design was almost none existent. We
16 beefed up critical structures for tornado
17 protection. We did an extensive review of the
18 seismic analysis of Ginna. We made a quite a few
19 changes both as a result of Bulletin 7902 and 14
20 NSEP. So we made quite a few seismic modifications
21 to Ginna.
22 Flood protection, quite a bit of flood
23 protection. And we relooked at high-energy line
24 breaks both inside and outside containment. We
25 changed the definition of high-energy and moderate-

1 energy consistent with the O'Leary letter, the '73
2 O'Leary letter where if it was either 212 or 200
3 pounds, it became a high-energy line. So that added
4 some additional lines like steam heating lines into
5 the scope of high-energy lines. And we did it both
6 inside and outside containment. And we made a far
7 number of modifications to improve separation from
8 physical effects.
9 Those are the main ones.
10 CHAIRMAN BONACA: Well, for example, I
11 was reading through that you have a two-train
12 auxiliary feedwater system. And you have a
13 separation between the two of them. And for SEP
14 purposes you could not exclude the possibility that
15 an external event would eliminate with a common
16 cause both trains.
17 MR. WROBEL: Yes, that was --
18 CHAIRMAN BONACA: So you have a reliance
19 on a third train now that is an independent train
20 that ran somewhere else. And, you know, my question
21 when I was reading was how do you treat methodology
22 wise, how do you treat this third train? I mean, is
23 it self-degrading.
24 MR. WROBEL: Yes, it's situated in
25 scope. That really occurred, background, 1974 when

1 it was determined that the high-energy line break
2 criteria was such that the main steam and feedwater
3 lines are in what's called our intermediate
4 building. Intermediate building also on another
5 floor had both motor driven aux feed pumps and a
6 turbine driven aux feed water pump. So
7 approximately the 102 line break intermediate
8 building we could not guarantee the operability of
9 those three pumps. So we added, basically, a bunker
10 at our separate standby aux feedwater system
11 completely separate from the main steam and
12 feedwater lines. The penetrations didn't go through
13 the intermediate building. It was all completely
14 separate. We would use that in the event -- at the
15 time it was in the event of a high-energy line
16 break.
17 CHAIRMAN BONACA: Yes.
18 MR. WROBEL: Subsequent to that we were
19 able to take credit for the standby aux feedwater
20 system for additional phenomena, for example tornado
21 protection for the original aux feedwater system was
22 not tornado, but the standby system was. And so we
23 didn't have to modify anything.
24 CHAIRMAN BONACA: Those fuel aux feed
25 lines, they're both steam driven by the pumps?

1 MR. WROBEL: Motor driven.

2 CHAIRMAN BONACA: Both?

3 MR. WROBEL: Both motor driven.

4 CHAIRMAN BONACA: The design one and the

5 backup?

6 MR. WROBEL: We have 200 percent turbine

7 driven.

8 CHAIRMAN BONACA: Okay.

9 MR. WROBEL: Two separate 100 percent

10 motor driven. And then two 100 percent motor driven

11 backups. We have 600 percent capacity.

12 CHAIRMAN BONACA: Okay.

13 MR. WROBEL: And aux feedwater never

14 seems to show up in our risk equation very high

15 because of that.

16 CHAIRMAN BONACA: No. All right. It

17 wasn't clear in the application. I mean, I'm not

18 saying -- I thought it was a very clear application

19 in general, but I just couldn't understand how many

20 systems you had in the aux system. All right.

21 MR. WROBEL: Okay.

22 CHAIRMAN BONACA: Any other changes of

23 substance? I mean, you pointed out the design basis

24 is better than modern one because you went through

25 the SEP. Yes, but your design maybe is not as

1 robust as, you know, as a plant where you don't have
2 to worry about that wall in between two trains to
3 collapse and take out both.
4 MR. WROBEL: Right.
5 CHAIRMAN BONACA: So I just, I was
6 looking for some insights that you may have outside
7 of that specific system I describe. Anything else
8 that --
9 MR. WROBEL: Most of the changes that we
10 made, we did make some changes for high-energy line
11 breaks with osculated breaks, not just in the
12 intermediate building but wherever there was a high-
13 energy line break and assured ourselves that we
14 would have a system that's available to mitigate
15 that high-energy line break separate from the break
16 itself. And we did have to do a fair amount of
17 separation in that area.
18 We did some, and for say tornado
19 protection or block wall protection. That was
20 another big issue.
21 We had to protect individual components,
22 like our main steam isolation valve. Actuators were
23 separated -- were protected, we build enclosures
24 around those that that if a block wall fell them, it
25 would not impact them. So we could do that.

1 CHAIRMAN BONACA: Now I have a question.
2 So for those components that serve as a backup to
3 makeup for the fact that you could not meet the SLP,
4 okay, like you know the extra auxiliary for those
5 trains.
6 MR. WROBEL: Right.
7 CHAIRMAN BONACA: So did you treat them
8 as safety grade systems or are some of them are non-
9 safety grade.
10 MR. WROBEL: Some are safety grade and
11 some are what we call safety significant or
12 augmented quality.
13 CHAIRMAN BONACA: Okay. Okay.
14 MR. WROBEL: If it was done purely for
15 tornado or flood protection, then those components
16 did not necessarily become safety related. They
17 became augmented quality or safety significant. But
18 we did treat them in the scope of license renewal as
19 (a)(2) components.
20 CHAIRMAN BONACA: Okay. So you did
21 include in the scope?
22 MR. WROBEL: Yes.
23 CHAIRMAN BONACA: That was your
24 methodology?
25 MR. WROBEL: Yes.

1 CHAIRMAN BONACA: Okay. That's it.

2 MR. WROBEL: The other thing that we got

3 out of the Systematic Evaluation Program is early

4 use of risk perspective. Just after WASH 1400 was

5 used, it wasn't a global PSA for the plant but on an

6 individualized basis the NRC did use cost benefit

7 analysis to determine whether or not or to what

8 extent we should make some modifications. One of

9 the ones that comes to mind particular containment

10 isolation valves. Our containment isolation valve

11 arrangement is not consistent with the current GDC

12 53 through 57. And on another defined basis we're

13 able to show that for the most -- except for one

14 case, I believe, all our containment isolation

15 valves or the differences from the GDC did not make

16 them risk significant if we maintained them as it

17 was.

18 CHAIRMAN BONACA: Okay.

19 MR. WROBEL: So that was a good insight

20 on risk perspective.

21 And like I mentioned, we did make some

22 cost beneficial plant changes, primarily the ones

23 that I already talked about.

24 MR. FORD: Could we go back to the risk

25 perspective aspect? The topic that will come for

1 conversation is the justification for one time
2 inspections. When you are making those
3 justifications, did the whole question of the risk
4 perspective come in? What if you are wrong? Did
5 you ask the questions what if in terms of the risk
6 perspective?
7 MR. WROBEL: On the one time
8 inspections, what we did is we tried to pretty much
9 follow the guidance that was in the Generic Aging
10 Lessons Learned. We looked at the types of
11 inspections that we felt there was a material
12 environment combination that could result in
13 potential damage. And so we looked at what type of
14 current procedures we had, our preventive
15 maintenance program, we looked at that. If we
16 didn't have something there and there was like a
17 water chemistry and the only program that we had was
18 water chemistry and there was potential for damage,
19 then we added that into the scope for our one time
20 inspection. And the way that we determined which
21 components to inspect had some risk significance to
22 it.
23 Now, Gerry, if you want to go into a
24 little more detail as to how we picked the
25 particular one time inspection components, but it

1 did have elements of risk.

2 MR. FORD: The reason for my question

3 is, maybe it's out of turn here in the discussion,

4 but much of your justification for some of the one

5 time inspection source, well at such-and-such a date

6 we looked, we saw no problem, therefore essentially

7 we won't again. Now, that's a one time look in a

8 time dependent aging mechanism, which is not

9 necessarily linear with time. So if your rational

10 was wrong, what would the impact be on the safety of

11 your plant? That's why I'm bringing it up under the

12 risk perspective?

13 MR. WROBEL: All right. Well, that

14 certainly didn't come up in SEP.

15 MR. FORD: Right.

16 MR. WROBEL: Not to that level anyway.

17 I believe that the one time inspections

18 that we committed to do are quite extensive and

19 they're really only in the areas where we thought

20 that the degradation mechanisms were either very

21 slow or nonexistent, but we thought we would look

22 anyway.

23 A lot of the inspections that we have

24 focused on for the next 33 years, we put them in

25 what we call our PSPM program, periodic surveillance

1 and preventive maintenance program. So what a lot
2 of people might have put into one time inspections,
3 we thought this is worth repeating. And so we
4 actually have a lot of the inspections that are part
5 of our PSPM program, the ones that we thought are
6 low risk significance, we put in --
7 MR. FORD: Okay.
8 MR. WROBEL: The nice thing about being
9 this old, not me but the plant, was that we actually
10 have a lot of operating time on the equipment. So if
11 we do not see anything, we're talking about not
12 seeing anything after 35, 36, almost 40 years of
13 operation. So, you know, the aging would have had a
14 good chance to envision itself, or come about
15 already. So that's how we picked those.
16 Anybody else wants to pick up more.
17 MR. ROSEN: Let me ask you a little bit
18 more about the risk perspective. Do you have an
19 internal events PRA?
20 MR. WROBEL: Yes. Our current PRA
21 includes internal events, external events but not
22 seismic. Fire and shutdown.
23 MR. ROSEN: It does.
24 MR. WROBEL: We've a very comprehensive
25 PSA. We've just gone through our peer review and

1 make a few adjustments, but nothing spectacular.
2 But, yes, it's quite a full PSA.
3 MR. ROSEN: Good.
4 MR. LEITCH: Was it this early use of
5 risk perspective that led you to see the need for
6 the installation of the backup aux feed pumps or was
7 that some other kind of regulatory action?
8 MR. WROBEL: No, that was purely
9 deterministic.
10 MR. LEITCH: Yes, the SEP?
11 MR. WROBEL: Yes, it was pre-SEP even.
12 You have a steam line in the same room as your
13 protection system, it didn't seem like a good idea
14 at the time.
15 MR. LEITCH: Yes. Yes.
16 CHAIRMAN BONACA: I still am surprised,
17 pleasantly surprised about the capacity of the
18 pumps, that you have two additional 100 percent
19 capacity pumps.
20 MR. LEITCH: And you have some kind of a
21 wall or a moat or something that divides the
22 circulating water pump house? Was that a result of
23 this perspective?
24 MR. WROBEL: A flood dam.
25 MR. LEITCH: Yes, a flood dam. Was that

1 a result of risk perspective.

2 MR. WROBEL: No. That was as a result

3 of the condenser failure at Brunswick, I think back

4 in '72.

5 MR. LEITCH: Yes.

6 MR. WROBEL: Where we decided that if it

7 could happen there, it could happen to us.

8 MR. LEITCH: Yes.

9 MR. WROBEL: So we did an analysis on

10 what would be the result of a condenser failure and

11 we added some flooding failures to the plant as a

12 result of that.

13 MR. LEITCH: So I guess I'm trying to

14 understand if the early use of risk perspective led

15 you to any physical modifications of the plant back

16 in that time frame?

17 MR. WROBEL: Yes, it did. It either

18 both led us to some additional modifications. I

19 believe there were some penetrations that had

20 thermal overload that it didn't have, and we checked

21 the risk perspective and put them in there. So

22 there's thermal overload protection, I believe, on

23 two to four containment electrical penetrations that

24 were put in.

25 There was also, like I said, the risk

1 perspective showed we'd have to do some
2 modifications, like modify our containment isolation
3 valve arrangement.
4 MR. LEITCH: Yes.
5 MR. WROBEL: And these were all early
6 PSA analysis that were done by the staff and
7 reviewed by us. But really it was their call on
8 those.
9 MR. LEITCH: Yes. So this was mid-'70s
10 time frame?
11 MR. WROBEL: This was about 1980 by the
12 time we got to that point.
13 MR. LEITCH: Yes.
14 MR. WROBEL: It started in '77. By the
15 time we got to the NUREG-0821 it was 1981 or '92.
16 MR. LEITCH: Yes. Okay. Thank you.
17 MR. ROSEN: You've done an interesting
18 job talking about the early use of your risk
19 perspectives. Can you update us a little bit about
20 what you're doing with the risk perspectives now?
21 Are you risk, for example, for configuration risk
22 management or --
23 MR. WROBEL: Yes. We have online risk
24 monitor called EOS at Ginna. And evolutions that
25 are done at Ginna Station are punched into what we

1 call EOS to determine whether or not the risk
2 profile changes significantly. If we get to a
3 profile level of an orange, what's equivalent to an
4 orange, I'm not sure exactly what level our first
5 step is, but you hit an orange you have to go
6 through PORV review in order to even make the
7 evolution. And you don't make an evolution that
8 goes to red. So that's on a daily basis, any MODs,
9 maintenance get done that way.
10 MR. ROSEN: So you're using this to
11 comply with 56.65(a)(4)?
12 MR. WILSON: Partly, yes. It is part of
13 the stuff we use for 84, but it goes beyond what 84
14 requirements are.
15 CHAIRMAN BONACA: You need to come up to
16 the microphone. Thank you. And speak with
17 sufficient clarity and volume.
18 MR. WILSON: David Wilson, RG&E.
19 The risk monitor and EOS is used for
20 maintenance rule determinations, but it's also used
21 in addition to that for normal ways of doing
22 business just to make sure that even though it's not
23 a maintenance activity, that we're not putting
24 ourselves in an unsafe configuration.
25 CHAIRMAN BONACA: So it's capable of

1 quantifying multiple components out of service?

2 MR. WILSON: That is correct.

3 MR. ROSEN: So would you characterize

4 your current risk, use of risk tools as aggressive

5 or part of a--

6 MR. WROBEL: I would say fairly

7 aggressive. I don't know what else we would use it

8 for. I guess day-to-day operation --

9 MR. ROSEN: Risk-informed in-service

10 inspection?

11 MR. WROBEL: We have not done risk-

12 informed in-service inspection yet. However, we

13 have used it in quantification designs or in

14 evaluating modifications.

15 We have looked at a risk-informed ISI at

16 one point, have not done it. Probably looking at it

17 again now that we have, hopefully, another 20 years

18 of capable operation.

19 I think Gerry Geiken wants to say

20 something.

21 MR. GEIKEN: I'm Gerry Geiken with Ginna

22 Station.

23 We have looked at the cost benefit

24 analysis of going to risk-informed inspections. And

25 at the present time have concluded that there isn't

1 sufficient savings economically to justify the
2 analysis that would be required to going to risk-
3 informed inspections. As a result, we continue to do
4 ISI as under the current requirements of ASME
5 Section XI.
6 MR. WROBEL: This is going to go quite a
7 bit faster, I believe, because we have covered quite
8 a few of these already.
9 Again, we're the oldest operating PWR.
10 We talked about the standby auxiliary feedwater
11 system as a unique feature.
12 We do have -- this is actually fairly
13 comparable to what you heard at Robinson last month.
14 We do have grouted containment tendons, but we have
15 rock anchors that are grouted right into the -- so
16 the tendons go right into the ground block. And we
17 have the rock anchors and tension bars that are at
18 the base of our containment.
19 I don't know if this is a good time to
20 talk about it, but also have station blackout
21 recovery. We do have a sketch. I think that's
22 next. I don't know if you want to ask questions
23 about the level of --
24 CHAIRMAN BONACA: You have an open item,
25 is that correct?

1 MR. ROSEN: We do want to hear about
2 that.
3 CHAIRMAN BONACA: Yes, when we get
4 there.
5 MR. WROBEL: Okay. We can wait on that.
6 The sketch is next. We'll go back to that sketch
7 when we get to station blackout recovery.
8 MR. ROSEN: It's apparently a phenomenon
9 that happens in upstate New York.
10 MR. WROBEL: Yes.
11 MR. ROSEN: Were you affected by it?
12 Were you one of the sections of the trip, by the
13 way?
14 MR. WROBEL: Yes. We did get an
15 automatic trip, but we didn't have a station
16 blackout. Our diesels worked fine.
17 MR. ROSEN: You have two of them, right?
18 MR. WROBEL: Yes.
19 MR. ROSEN: They both started and ran
20 and loaded?
21 MR. WROBEL: Yes. So we didn't get a
22 station blackout.
23 MR. ROSEN: No. No blackout.
24 MR. WROBEL: We just have snow.
25 I just wanted to let you know, our

1 performance indicators are green, inspections
2 findings are all green so I didn't put a slide on
3 that. But I think the NRC has one. It looks kind of
4 a like a metal --
5 CHAIRMAN BONACA: Yes.
6 MR. WROBEL: Skip this until we get to
7 station blackout.
8 We're going to talk a little bit about
9 what currently is happening at Ginna Station or has
10 just happened.
11 We just changed our reactor vessel head.
12 It's a one piece construction. And we put in new
13 controller rod mechanisms. We have the old ones as
14 spares. We did put those in while we were at it.
15 I'll go to the next slide just to show a
16 couple pictures of it. That's the head in the shot.
17 The next one is with the ventilation installed. And
18 we have 400 more slides of that, but we won't show
19 you those today.
20 MR. ROSEN: Do you have an access patch
21 big enough to get --
22 MR. WROBEL: Yes, and it was really a
23 good picture. Should have brought that one in. As
24 it was going through the equipment hatch, did not
25 have to modify it as opposed to when we did steam

1 generators and had to cut a hole in top of the
2 containment.
3 MR. ROSEN: Pardon me. I didn't
4 understand what you said.
5 MR. WROBEL: Oh, as opposed to when we
6 replaced steam generators, we had to cut holes on
7 top of containment. This came in through the
8 equipment hatch.
9 CHAIRMAN BONACA: Now you use 690 TT if
10 I remember, correct?
11 MR. WROBEL: Yes.
12 CHAIRMAN BONACA: And CRDM, I mean are
13 they now differently than in the design that we had
14 on the 600, or is there a different --
15 MR. WROBEL: No, I believe they're the
16 same. Gerry, are they any different than -- I mean,
17 they 304 stainless steel, but I don't think the
18 designs any different than we had before.
19 CHAIRMAN BONACA: Because the weld
20 material is different, if I remember, too.
21 MR. GEIKEN: Yes. This is Gerry Geiken.
22 The weld material is Inconel 52.
23 CHAIRMAN BONACA: Right.
24 MR. GEIKEN: Joining the penetration to
25 the head. It's all I-52. Bare wire cake.

1 CHAIRMAN BONACA: Okay.

2 MR. WROBEL: In addition to replacing
3 the upper reactor vessel, we did a detailed lower
4 reactor vessel head inspection. We took off the
5 insulation off the bottom or lowered the insulation
6 so we could look at it. We did detailed visual, VT-1
7 examinations at all 36 nozzles. And there were no
8 indications of any boric acid.

9 MR. ROSEN: Taking the insulation off,
10 was it designed to have come off or --

11 MR. WROBEL: No. No. We had to take it
12 off. And we have a new system put in now that makes
13 access easier. There's room where you can put a
14 snake through a camera for future inspections. So
15 we've redesigned the bottom of head insulation.

16 MR. FORD: I'm assuming that with the
17 lower T, that temperature, that you are a low
18 susceptibility plant, is that correct?

19 MR. WROBEL: That's correct. For the
20 bottom, and as well as the top.

21 MR. FORD: The top?

22 MR. WROBEL: Because of the material
23 differences also.

24 MR. FORD: But even without the change
25 of material, it would still be a low susceptibility

1 plant, is that right?

2 MR. WROBEL: Bottom or top?

3 MR. FORD: The top?

4 MR. WROBEL: I think we would be medium.

5 MR. GEIKEN: George, it would have been

6 medium.

7 MR. FORD: So you changed it purely just

8 for insurance purposes, technical insurance?

9 MR. WROBEL: We did an economic analysis

10 of how much it would take to -- every outage gear

11 for it just in cases and it was economically viable

12 to replace it other than do that every year. And we

13 will still being inspections, but on less frequent

14 basis.

15 CHAIRMAN BONACA: Yes. So now the head

16 has been replaced and the plant is running now?

17 MR. WROBEL: Yes. Yes, it went quite

18 smoothly.

19 MR. MECREDY: This is Bob Mecredy.

20 On the reactor vessel head replacement,

21 there were really two pieces. One was the economics

22 in looking at the costs of inspections between 2003

23 and the end of the current license, 2009.

24 The other piece is intangible, which is

25 with replacing the head we're in control of our

1 destiny. With overhead and inspection techniques,
2 one could envision going in and looking at the CRDM,
3 identifying things that might be real, might not be,
4 might be an artifice of the examination techniques
5 and the impacts on outages. So, it really made
6 sense from several standpoints to replace the head.
7 And so we made that decision early on to do that.
8 MR. FORD: You're one of the stations,
9 few stations that have come in front of us, who have
10 actually gone through this head replacement. Just
11 for our interest, what sort of quality control was
12 applied for welding Alloy 52? Do you know that
13 answer offhand
14 MR. MECREDY: I don't, but Gerry Geiken.
15 MR. GEIKEN: Yes. This is Gerry Geiken.
16 The head was fabricated at Babock &
17 Wilcox in Cambridge, Ontario.
18 MR. FORD: Okay.
19 MR. GEIKEN: Their own internal quality
20 organization is very good. And we augmented that by
21 multiple visits to the plant. We had our own NDE
22 people providing some oversight to various critical
23 activities. And we had a constant presence of our
24 welding engineer during the entire fabrication
25 process. So I would say we didn't necessarily rely

1 on the quality control measures that they could or
2 would apply and use, but we tried to exercise some
3 of our oversight. And I think the overall quality
4 of the fabrication is excellent.
5 MR. FORD: True.
6 MR. MECREDY: The other advantage we had
7 was with purchasing new control rod drive
8 mechanisms. We were able to get those on site prior
9 to the outage and complete the welding of those onto
10 the new head outside, you know prior to the outage.
11 So we had the advantage of more accessible
12 environment and really a better environment for
13 people working on it, inspections oversight. And so
14 that was done. And, of course, it was facilitated
15 by the size of our head, being able to go in through
16 the equipment hatch.
17 MR. WROBEL: The other major issue that
18 we looked at was on the lower reactor vessel head
19 inspection. This detail of the penetration, as you
20 can see, the paint and weld pad, everything was in
21 excellent condition. There was no leakage, no
22 indication of leakage through the nozzles, boric
23 acid and, again, it came out as good as we would
24 expected on the bottom head.
25 MR. ROSEN: You know, that's not the

1 dialogue I would have given, given this picture. I
2 would have said there was some indication or leakage
3 from it. Or what am I looking at when I look right
4 on top of that nozzle?
5 MR. GEIKEN: I think it's the paint.
6 MR. WROBEL: Right there?
7 MR. ROSEN: Go a little to your left.
8 Put the dot back on. Yes, what's that stain there?
9 MR. WROBEL: Paint.
10 MR. ROSEN: And that's paint also above
11 that? There's no --
12 MR. GEIKEN: It's zinc-rich paint. It's
13 painted with a zinc-rich Carbozinc-11. They got a
14 little sloppy and they got some of it onto the
15 penetration.
16 MR. ROSEN: Okay.
17 MR. WROBEL: We'll have a better picture
18 for the next presentation.
19 MR. FORD: Given the observations at
20 South Texas, you could be awkwardly minded, if you
21 like, and say here you just painted over the annulus
22 with paint and there's boric acid on top of that.
23 Is that a reasonable question?
24 MR. WROBEL: That would not be allowed.
25 No.

1 MR. FORD: You mean it wouldn't be
2 allowed to have occurred or not a good --
3 MR. WROBEL: You can't cover up
4 something like that. Now if we found any -- we
5 looked real well for boric acid there, because we
6 knew what happened out at South Texas. So we really
7 wanted to know if there was anything. We were
8 prepared to make repairs, if necessary. But we
9 didn't find anything to make repairs to.
10 I'm not sure exactly the frequency at
11 which we'll be inspecting these in the future. I
12 think it's very outage.
13 MR. GEIKEN: Every outage.
14 MR. WROBEL: We'll be looking. So next
15 year's picture is really going to look good.
16 CHAIRMAN BONACA: Okay.
17 MR. WROBEL: The other issue that is a
18 more recent issue that came up is in our containment
19 sump, what we call our B sump. That's a depiction
20 of what it looks like. The sump is -- a wire mesh
21 screen. And the RHR entrance with a bell mouth
22 entrance piping at the bottom. And we did do an
23 inspection of that this outage, and we did find
24 things. We did find some minor bypass flow issues.
25 We did find some openings that were greater than the

1 size of the mesh, the 3/16" by 9/16'.

2 Foreign materials we found dried boric

3 acid in the bottom of the sump where there had been

4 leakage in the past and then just evaporated. And

5 that was not of any safety significance.

6 We did find some metal parts in there,

7 clamps a file. And less than 6 ounces of some other

8 foreign material.

9 So there was some foreign material in

10 the bottom of the sump. We had a detailed NRC

11 inspection that concluded last week. Preliminary

12 findings are that we had 2 non-cited green

13 violations of our corrective action program as a

14 result of that inspection.

15 MR. ROSEN: Because of the materials

16 found in the sump or --

17 MR. WROBEL: One was materials found in

18 the sump and one was the bypass flow. If you want

19 to point to the next picture. That's the mesh size

20 that it was supposed to be.

21 MR. ROSEN: Yes.

22 MR. WROBEL: That's an opening that

23 clearly is larger than that. That's inside the sump

24 underneath the floor.

25 So, next picture is our repair as well

1 as the plates over that. So there are no more
2 openings greater than that mesh size. So you can
3 see that less than a day later that was done. So
4 there were several openings like that that were
5 found.
6 The NRC, at least preliminary indication
7 from the inspection, was that they were very low
8 safety significance, but we did get two non-cited
9 green violations. Preliminary.
10 MR. LEITCH: Absent that bypassing, can
11 you make any comment on the adequacy of the screens
12 that do exist? In other words, have you revised
13 your operating procedures or is there ongoing
14 analysis to confirm that?
15 MR. WROBEL: Yes, we did a detailed
16 analysis in accordance with, I believe, it's Reg
17 Guide 182, Rev 2 or 3 when we did a steam generator
18 replacement in 1996. We did a transport analysis
19 with the current state of the art then, which I
20 think still is pretty close to what we are now given
21 that it's still evolving. And we did analysis of
22 the screen as it was supposed to be, and it did
23 indicate that there would be some head loss. I think
24 we modified the bottom of the fibrous insulation
25 from reflective metal insulation to a type of more

1 fibrous insulation that insulated better. We did
2 put catchers up by the steam generator so that it
3 wouldn't get into the sump, but then we also did an
4 analysis of what the transport analysis would be to
5 the sump, how much head loss there would be, did all
6 the NPSH calculations for our HR. And, obviously,
7 we found that there is margin there.
8 The latest analysis was did was in '96,
9 to my recollection, unless somebody can remember.
10 MR. ROSEN: That's a curious discussion,
11 George. You say you went from reflective metal
12 insulation to a more fibrous insulation?
13 MR. WROBEL: In that one, in the bottom
14 of the steam generators. There's more efficiency.
15 That reflective metal was just allowing too much
16 heat out. But we did compensate for that by putting
17 a fibrous debris screen right underneath the steam
18 generators, right in that vicinity. So we didn't
19 just willy-nilly change it. We thought about it,
20 changed it out with a better insulating properties,
21 but we didn't compensate for it by putting the
22 screens down underneath the generators.
23 MR. LEITCH: Well, I guess my question,
24 it seems to me that there's some kind of an NRC
25 correspondence to all PWR licensees. I don't know if

1 it's a generic letter or just what the document is,
2 that requires a response. And I guess what I'm
3 saying is have you responded to that, and if so, how
4 did you respond.
5 MR. WILSON: This is David Wilson, RG&E.
6 MR. WROBEL: The responder will respond.
7 MR. WILSON: In fact, these inspections
8 that identify the bypass flows were done in
9 accordance to our response. The Bulletin 2003-01
10 requires to look at certain attributes and try and
11 determine what we could do right now to reduce the
12 risk consequences of screen fouling. And there were
13 several things that we committed to doing, including
14 these inspections that we are in fact doing right
15 now. They're not all required to be done at this
16 instant.
17 One of the Bulletin key items was to
18 modify your operating procedure such that perhaps
19 you would refill your RWIC or add more water volume
20 to containment. Within our current licensing basis
21 and accident analysis that would be something that
22 would not be allowed under 50.59. In fact, may have
23 more detrimental effects than positive effects.
24 But what we committed to in that
25 Bulletin response, and what we are doing, is working

1 with the industry, with particularly the
2 Westinghouse Owners Group in order to analyze and
3 evaluate the consequences and possibilities of
4 adding more water or reducing ECCS flow, or securing
5 a train of spray if you didn't reach a certain
6 volume in order to delay the injection times to
7 minimize the sump volume and increase the transport
8 times.
9 All that being said, the jury's still
10 out from an analysis standpoint. We're
11 participating. And we committed to in our Bulletin
12 response was that we would follow through. And once
13 the science is done, we would evaluate whether or
14 not we can actually execute those changes. Because
15 just because it comes out of a Westinghouse Owners
16 Group or some generic emergency response guidelines
17 does not necessarily mean it's still appropriate for
18 your facility. You still have to do individual.
19 The other things that we looked at were
20 debris in containment. Not just how to filter the
21 debris out, but what the debris source terms.
22 We took detailed high resolution videos
23 and walk downs and measurements of the insulation
24 sources for the loop areas and for those
25 connections.

1 We don't know necessarily what the
2 generic letter that's going to come out will look
3 like with respect to what we have to protect
4 against. There's issues right now with water
5 chemistry. There's issues with flocculents and
6 things like that.
7 So our thrust this outage was to reduce
8 the risk. And the things we could do to reduce the
9 risk that were most appropriate were evaluate and
10 then, unfortunately in our case, repair our screens
11 to be consistent with our design basis and to remove
12 debris.
13 And the debris sources that we found
14 that were removable, we found paper tags. We made
15 significant and major modifications to our
16 procedures for closing out containment and for
17 modifying our debris control as we escalated the
18 modes from a refueling mode up towards power
19 operation.
20 And beyond that, you know, it's business
21 as usual. We've got the commitment letters in and
22 we're following through on them.
23 CHAIRMAN BONACA: What's the volume of
24 your RWST?
25 MR. WILSON: About 300,000 gallons.

1 MR. WROBEL: We might as well talk a
2 little bit about the license renewal application
3 now, since we're mostly done with the presentation.
4 The preparation, we did not have too
5 many contractors. We primarily did the application
6 in-house. We have matrixed staff, everybody
7 participated in here except me. Because I worked
8 part time on license renewal and part time on other
9 jobs, like looking through sumps.
10 We did use specialty contractors where
11 we needed to. We had several areas that we didn't
12 have the expertise in-house to do the work, so we
13 had Framatome, for example, do some analyses.
14 Westinghouse did analyses. And we did not a fatigue
15 monitoring program, and we had a contractor come in
16 and install, initiate a fatigue monitoring program
17 for us which turned out to have great results.
18 So, we do 95-10, Standard Replant
19 format. We were the third plant to do that. And, of
20 course, all three plants came pretty closely after
21 each other, so there was not much opportunity for
22 lessons learned. But we did use the Standard
23 Replant format.
24 One of the bigger portions of our
25 application, as you might have seen, is the GALL

1 3.x-2 tables. Those are tables that are
2 material/environment combinations, programs that are
3 not consistent with the GALL. For the most part, or
4 almost completely, they were additional
5 material/environment combinations that were not in
6 the GALL, possibly due to the fact that the lessons
7 learned were from problems and if there were
8 material/environment combinations that had no
9 problems, then they wouldn't be in the GALL. So we
10 ended up putting them in a 3.x-2 table. And that
11 added many pages to our application.
12 Also, the use of systems. When we had a
13 material/environment combination in one pipe system
14 and it wasn't in the GALL, then we put it in a 3.x-2
15 table, even though we could have gone to another
16 system, FECCS system or something, but we found it
17 in the CBCS, so that's why we put it in that format.
18 We did all the interim staff guidance
19 that were available at the time. We addressed those
20 in the application. And all the interim staff
21 guidance documents that were out.
22 Subsequent to that we appear to have
23 answered to in RAI space, so I believe we're up to
24 date on all of our interim staff guidance documents.
25 We do have some scoping open items, but

1 we'll be talking about that when the NRC makes their
2 presentation.
3 MR. LEITCH: Without getting into the
4 details of those open items, I guess I had the
5 impression that a number of these open items had
6 somewhat more substance and still somewhat more
7 areas of disagreement than we normally see at this
8 stage in the process.
9 I mean, frequently at this stage the
10 staff comes and tells us well there's so many open
11 items, but they're all basically resolved. We're
12 awaiting formal documentation of the resolution and
13 so forth. It seems like some of these, although
14 there are only eight, but I think there are about 5
15 or 6 that seem to me to represent some significant
16 areas of disagreement. Is that a correct
17 perception?
18 MR. WROBEL: I think when we go through
19 that we'll find that we're significantly reduced
20 from 8 to possibly 1 by now.
21 MR. LEITCH: Okay.
22 MR. WROBEL: But let me go over them
23 when Russ goes through them.
24 MR. LEITCH: Okay. Fine. Yes, that's
25 good.

1 MR. WROBEL: We'll be available for
2 comment also.
3 MR. LEITCH: Yes.
4 MR. WROBEL: In case you want to ask us
5 what we think of them.
6 Selected TLAAs. I just wanted to provide
7 a few of them that I thought were more interesting.
8 If you have any questions on the rest of them,
9 that's fine.
10 Pressurized thermal shock, we thought
11 that would be an important issue. We did analyze the
12 Ginna reactive vessel with outline materials, both
13 the plate and the weld out to the end of the
14 extended period of operation. You can see that the
15 RT_{PTS} value where the beltline is 270.6, which is
16 significantly below 300. We've done the analysis
17 out to 80 years, and still quite a bit below 300
18 degrees. And the plates, you can see there's a lot
19 of margin over there.
20 This is one of the open items that staff
21 is independently reviewing. I think they'll be done
22 relatively soon and, hopefully, agree with us.
23 MR. ROSEN: To what do you attribute all
24 that margin, given this is an old plant and the
25 technology for building vessels was somewhat less

1 mature at the time?

2 MR. WROBEL: Yes. I think we got a

3 really good vessel from B&W. It was all fabricated

4 at the -- where was? Mount Vernon, Indiana

5 facility. It wasn't moved around. A lot of the B&W

6 vessels back then were moved from one place to

7 another.

8 And I think the cooper and nickel

9 content that we had is relatively low, .25 and .36

10 percent. So we were able to -- so those values

11 indicated relatively low -- fluence isn't

12 particularly high either, so that helps us out.

13 MR. ROSEN: And why is the fluence low?

14 MR. WROBEL: We went to a low leakage

15 back in the mid-'80s, I believe. And we've

16 maintained that since that time.

17 We did the analysis out to, I believe,

18 54 EFPY just in case there might be an upgrade.

19 Certainly 80 percent used to be the standard

20 capacity factor, but it certainly isn't anymore.

21 More like 95 percent now. So rather than 48, we

22 went out to 54 EFPY with these analyses. And so it

23 seems to be holding true.

24 MR. ROSEN: So 54 would represent a 90

25 percent capacity factor averaged over the life of

1 the vessel?

2 MR. HERRICK: That's correct. Now, say,

3 if we do an upgrade, that will bump that up a little

4 bit. So then it might be 85 percent with an upgrade

5 or something. And, obviously, if we have to redo the

6 calculation with a higher fluence rate, then we'll

7 do that also. But it looks like we have significant

8 amount of margin.

9 Also it helped that we had credible

10 surveillance data. If we had used simply the Reg

11 Guide 199 Revision 1.1, the generic data, I think

12 that our PBS value is about 290. But having

13 credible surveillance data got it 270.

14 CHAIRMAN BONACA: You have an open item

15 on the specimen, right?

16 MR. HERRICK: That's right. But it's

17 not related to the analysis, it's related to when we

18 test it.

19 CHAIRMAN BONACA: Right.

20 MR. HERRICK: We'll go over that later.

21 MR. WROBEL: Factor toughness of the

22 reactor vessel, we have taken four capsules out, we

23 have two left to go. Some of the capsule Charpy V-

24 notch data would indicate that our upper shelf

25 energy was approaching or could be below 50 foot

1 pounds. So rather than the next time we do the test
2 to find out that maybe it actually is below 50, we
3 decided we would contract with the reactive vessel
4 manufacturer and do a fracture mechanics, a detailed
5 fracture mechanics evaluation called equivalent
6 margins analysis, which is an alternative to the
7 code analysis for upper shelf energy. We had that
8 performed for this reactor vessel for license
9 renewal out to 54 EFPY. And there's significant
10 margin under Section XI Appendix K. If you want more
11 details on that, Gerry will answer them. But there
12 is significant margin in the fracture toughness of
13 the reactor vessel from an upper shelf energy
14 standpoint.
15 CHAIRMAN BONACA: Okay.
16 MR. WROBEL: But we did use that, but
17 equivalent margins analysis.
18 MR. FORD: And that question will also
19 be covered later and the whole question of us of the
20 specimens.
21 MR. WROBEL: Yes.
22 MR. GEIKEN: George, you ought to pull
23 out that we don't know that the upper shelf energy
24 is below 50.
25 MR. WROBEL: Yes.

1 MR. GEIKEN: The last capsule we tested,
2 the Chaprys came in at 55. And they seemed to
3 plateau out at 55. The last three capsules, the
4 upper shelf energy was nearly the same balance
5 between 52 and 55.
6 MR. WROBEL: Right. Yes. So we don't
7 know if it'll be below 50, but we did the analysis
8 just in case.
9 MR. FORD: But it's fair to say that
10 these are two open items which have not been
11 secured?
12 MR. WROBEL: As far as I know, this one
13 is closed. There's nothing open on this one.
14 MR. ARRIGHI: I'm sorry, which open item
15 was it?
16 MR. WROBEL: Fracture toughness
17 equivalent margins analysis. Hopefully, that's an
18 open item.
19 MR. ARRIGHI: When I get there, we'll
20 address it.
21 MR. WROBEL: Gerry said it's not.
22 MR. GEIKEN: No, shelf energy is closed.
23 MR. WROBEL: The other major TLAA that
24 we did is we did the T calculations for all of the
25 RCS and put the details. We did do these

1 calculation in accordance with the ISG. At 15, it
2 talks about the environmental effects. We did use
3 15.35 for stainless steel and 2.53 for carbon steel.
4 We did these for 60 years, and you can see that all
5 the values are quite a bit below 1.0, even for 60
6 years including maximum environmental effects. So we
7 did surge line, nozzle, charging nozzle; we did all
8 those detailed analyses because of the fatigue
9 monitoring program that we had installed. And did
10 all the calculations.
11 So there's no open items on fatigue of
12 the RCS.
13 In terms of programs, we have 33 aging
14 management programs that we took credit for; 20 of
15 them were consistent with the GALL. I'm sure we'll
16 hear more about that.
17 Twenty were consistent with the GALL.
18 Ten were consistent with exceptions. Of those 10,
19 probably 5 or 6 the exceptions were quite minor.
20 They were possibly a different addition of a
21 reference, but there were no major exceptions taken
22 through the vast majority of the programs that took
23 exception to the GALL.
24 All the exceptions were discussed with
25 the NRC staff. We have plant specific operating

1 experience and results, and I don't believe there's
2 any open items left on programs that are consistent
3 with GALL. They've been reviewed several times and
4 all the differences are justified.
5 We did have 3 plant specific programs
6 that were not GALL programs, mentioned earlier. The
7 periodic surveillance maintenance program, thimble
8 tube inspection program and systems monitoring
9 program. Those are programs we already had in place.
10 They weren't in the GALL, but we do take credit for
11 those for aging management so we described those in
12 our application.
13 The vast majority of programs we already
14 had. We either made minor enhancements to them; 6
15 programs that we enhanced. A lot of it was like the
16 boric acid corrosion program, which we had a boric
17 acid corrosion program but it didn't extend to the
18 same level that the current guidance would have you
19 go to. So we added not just reactive cooling system
20 in the vicinity of coolant leaks, but anything --
21 but any carbon steel that could get leaked on by
22 boric acid, whether it's in the CVCS line, whether
23 it's electrical conduit, whatever it is that could
24 leak onto boric -- boric acid could leak onto carbon
25 steel is covered on our current boric acid program.

1 MR. ROSEN: Does it include, for
2 instance, the pressurizer nozzles? Pressurizer
3 heater?
4 MR. WROBEL: Yes. Yes. I mean, if it
5 can leak from there, then it's covered.
6 MR. ROSEN: And you looked at the
7 pressurizer heater, the bottom of the pressurizer?
8 MR. WROBEL: I don't know if we've
9 looked at -- did we look at that?
10 MR. GEIKEN: Yes, we looked on this
11 outage. We took the insulation off.
12 MR. ROSEN: Pardon me? Again?
13 MR. GEIKEN: Sorry. I'm Gerry Geiken.
14 We did ISI examinations this outage on
15 the pressurizer surge nozzle.
16 MR. WROBEL: Oh, that's right.
17 MR. GEIKEN: And we uncovered the bottom
18 head, a significant portion of it.
19 MR. ROSEN: You covered the bottom head,
20 is that what you said?
21 MR. GEIKEN: We uncovered.
22 MR. ROSEN: Okay. And you looked at the
23 bottom head, you looked at the pressurizer heater?
24 MR. GEIKEN: We looked at -- yes. The
25 bottom head is where the pressurizer heaters

1 penetrate. And we looked all around there. Yes.
2 We don't have any Inconel 82/182 welds
3 in our pressurizer. So if the issue is primary
4 water stress corrosion cracking, which I suspect
5 you're thinking of, what you may be thinking of, we
6 don't have that. All our pressurizer penetrations
7 are stainless steel, welded with stainless steel
8 weld metal.
9 MR. WROBEL: We did generate four new
10 programs that we didn't have before. We have a
11 fatigue monitoring program, cable condition
12 monitoring program.
13 We did make a commitment to look at
14 reactor vessel internals in the future and to try to
15 look at finer cracks than we have currently
16 expertise to do that. And we're committed to do
17 that by 2009 or have a program sent in, I believe,
18 by 2007 and approved by the NRC. We don't feel that
19 that's going to be a major issue.
20 Reactive vessel head penetration, we
21 were looking and we now have a formal program. It
22 was committed to more from the current Bulletins
23 than from license renewal, but the two intersected
24 and we took credit for those.
25 MR. LEITCH: I have a numbers question,

1 I guess. I am not sure if this should go to the
2 licensee or the staff. But in an inspection report
3 the staff said they looked at 28 programs of 33 that
4 the licensee claimed were consistent with GALL.
5 MR. ARRIGHI: Yes. This is Russ
6 Arrighi.
7 During our aging management program
8 audit we did look at 28 of the 33. For those other
9 2 programs there were some differences. And in the
10 application the licensee had the ten attributes for
11 that program. And that was reviewed in-house by the
12 staff.
13 MR. LEITCH: Yes.
14 MR. ARRIGHI: So when we said we
15 reviewed those 28, Mr. Wrobel is correct, there were
16 only 3 that are plant specific, but the wording on
17 that may have been misleading in the report. Again,
18 any attribute that was different than GALL was
19 reviewed in headquarters by the staff.
20 MR. LEITCH: Now, I'm still not sure I
21 understand. I guess my question is going into this
22 inspection we thought that 28 programs were
23 consistent with GALL and coming out of the
24 inspection we found that there were only 20
25 consistent with GALL. Is that correct or am I

1 missing the point here?

2 MR. ARRIGHI: When I put the report

3 together, looking at the spent fuel pool neutron

4 absorber program, Ginna's program, it covers the ten

5 attributes but it doesn't match the attributes

6 explicitly. So when I was reviewing it, I didn't

7 consider that a GALL program when actually, already

8 when I sit back and reevaluate it and talking with

9 George, you know, for consistency I should probably

10 should have put that that program is a GALL program

11 and even though they have the 10 attributes

12 discussed in the application, I should have said

13 that it wasn't a plant specific program, it was a

14 GALL program. However, that program was viewed by

15 the staff, because again the attributes were

16 included in the application. And in the in-house

17 the NRC staff could review that here because the

18 applicant, again, the information regarding the

19 attributes in the license renewal application. And

20 that's the same for the other programs also.

21 MR. LEITCH: Okay.

22 MR. FORD: I have a more technical

23 question. I must admit, reading through the

24 application and the SCR I was a good deal frustrated

25 by the lack of detail, factual detail.

1 For instance, in your fuel oil
2 chemistry, the AMP, you are not going to put any
3 biocide or corrosion inhibitors to protect the
4 internals of that tank. No justification is given
5 it, apart from the fact that you haven't seen MIC or
6 any other corrosion event there.
7 There are a few questions asked by the
8 staff regarding to your thimble tube AMP. And all
9 the aspects of the justifications for the one time
10 inspection. And, unfortunately, in both the SER and
11 the application the justifications for the actions
12 that are going to be taken, are supposed to be taken
13 are all verbal. There is no data to support your
14 assertions.
15 Can you give us a feeling as to the
16 extent of the actual engineering data driven
17 discussions that went on between your organization
18 and the NRC to back up those?
19 MR. WROBEL: Yes. The actual data --
20 MR. FORD: Were the graphs people were
21 looking at, or the data meet your justifications?
22 MR. WROBEL: I think a lot of it was
23 operating experience. We did rely heavily on
24 operating experience. Some of it we did rely on
25 science.

1 A lot of the information that was
2 actually useful in documentation is in what we call
3 our program basis documents. Program basis
4 documents are where were we implement all the
5 programs. Those were available to the staff for
6 detailed review, but they did not go into the
7 application. They're all about 30 pages long, have
8 all the procedures that implement the programs and a
9 lot more of the operating experience and history.
10 MR. FORD: So they did do more than
11 Appendix B, the AMPs?
12 MR. WROBEL: Oh, my goodness, yes. I
13 mean, everyone of those programs has a 30 pages
14 program basis document behind it.
15 MR. FORD: And there's data,
16 extrapolations of data?
17 MR. WROBEL: Yes.
18 MR. FORD: Uncertainties, all of these
19 are what happens if?
20 MR. ELLIOT: Barry Elliot.
21 I thought restricted at thimble 2?
22 MR. WROBEL: Yes.
23 MR. ELLIOT: They had done a whole lot
24 of inspections of the thimble 2 for wear. And they
25 have data from the early '90s on. And they based

1 their inspections based on that actual data from
2 inspections on the thimble 2. So they actually have
3 data there from their previous inspections, which
4 they base their inspection program for the thimble
5 2. So the guide tube, that was an issue
6 that we brought up that they had originally had a
7 mitigation program, but no monitoring program. And
8 we've discussed that with them with great detail,
9 and you can see in our SER. And it's still open,
10 but they have proposed a monitoring program now.
11 MR. FORD: Okay.
12 CHAIRMAN BONACA: I had some similar
13 questions, because for example I ask them now.
14 Above ground carbon steel tanks says that you will
15 perform a one time inspection on the reactor makeup
16 water tank. It doesn't say what inspection you're
17 going to perform. I would like to know is it
18 automatic inspection, visual?
19 MR. WROBEL: Gerry's got the details on
20 that.
21 MR. GEIKEN: This is Gerry Geiken. I
22 can offer the details on that.
23 We've already done that inspection. We
24 drained the tank completely. Did a 100 percent
25 visual inspection of the painted interior of the

1 vessel and an ultrasonic examination of the bottom,
2 flat bottom of the tank.
3 CHAIRMAN BONACA: Okay. And you found?
4 MR. GEIKEN: We found no evidence of
5 degradation whatsoever.
6 CHAIRMAN BONACA: Okay. All right.
7 MR. FORD: I can understand your
8 rational. Let me give you a hypothesis and then you
9 shoot it down.
10 You find no corrosion in your fuel
11 tanks, presumably because your fuel supplier has met
12 certain specification limits. Assume that you get a
13 bad lot and you get an attack of bacterial-assisted
14 corrosion, induced corrosion, that can go extremely
15 fast locally.
16 Now the way you've justified the one
17 time inspection, which I believe is what the fuel
18 oil tank you've got because you haven't seen any
19 corrosion, what happens if next year you get this
20 rapid corrosion? You've got no process apart from I
21 understand it a ten year inspection periodicity for
22 that tank. You're not going to catch that.
23 And then the follow question is what the
24 consequences?
25 MR. GEIKEN: Well, actually our diesel

1 fuel oil, every batch is tested by various ASTM
2 methods.
3 MR. FORD: Okay.
4 MR. GEIKEN: As in accordance with the
5 requirements of the GALL program.
6 MR. FORD: Yes.
7 MR. GEIKEN: Prior to being delivered to
8 the site and prior to being dumped into the tanks,
9 or prior to the tanks being filled.
10 In addition, I think our frequencies now
11 for internal inspections.
12 MR. WROBEL: Nine years.
13 MR. GEIKEN: They're still every 9
14 years.
15 We just went into them this outage and
16 they're pristine. But in terms of the potential for
17 getting a bad batch, we're as proactive as we feel
18 we can be in terms of inspecting every load of fuel
19 oil. And we do multiple inspections. We inspect
20 not only before the tanks are filled, but after
21 they're filled from three locations. We follow all
22 the guidance that's in the GALL, and I think we've
23 committed to some additional particulate testing.
24 But your concern is biocides?
25 MR. FORD: Well, biocides, corrosion

1 inhibitors. I'm just bringing up those as for
2 instances.
3 My concern is that not just your
4 stations, all the previous stations we've had
5 exactly the same discussion about what is your
6 justification for a one time inspection for a
7 possibly nonmelior degradation mechanism. So you
8 find no corrosion of degradation today? And that's
9 20 years into the process. But what's to say that
10 you're not going to have a MIC problem or pitting
11 problem because you don't have inhibitors or don't
12 have biocides in next year?
13 MR. GEIKEN: Well, actually --
14 MR. FORD: And you haven't done your
15 consequence analysis, but that's what you told me in
16 the very beginning.
17 MR. GEIKEN: Actually, the diesel fuel
18 oil testing program and the internal inspections of
19 the diesel fuel oil tanks, they're not one time. I
20 mean, they're periodic.
21 MR. FORD: Okay.
22 MR. GEIKEN: So we've been into the
23 diesel fuel oil tanks once every outage, up to 1990
24 -- what was it, George?
25 MR. WROBEL: '92.

1 MR. GEIKEN: '92. So for 20 some years
2 we had a history of data there that showed that
3 there was no internal degradation of the vessels.
4 And we've done the first 9 year inspection since
5 then this outage, and found the same thing.
6 MR. FORD: I guess I'm excessively
7 susceptible to this having worked in this industry
8 in the cracking side. And you can bet your bottom
9 dollar, tomorrow figuratively speaking you're going
10 to have an "oh, heck" hitting you, which you never
11 realized you were going to happen, because you've
12 had a good 20 years experience beforehand. That's
13 what I'm pushing to.
14 CHAIRMAN BONACA: Just operating
15 experience is not, by itself, a good --
16 MR. FORD: A good measure necessarily.
17 CHAIRMAN BONACA: Necessarily a good
18 project for the next 20 years when you get from 40
19 to 60. And, of course, it's unchartered territory.
20 I mean, nobody's gone that far.
21 On the other hand, I think that some of
22 the issues for the tank, you would measure leakage
23 from it before you get to the point where you have
24 no sufficient inventory, I would suspect. I mean,
25 and I will expect that you would have a corrective

1 action program taking -- because, I mean, you have
2 spec restrictions of those tanks. And you have the
3 fuel levels that you have maintain, right?
4 MR. WROBEL: Right.
5 CHAIRMAN BONACA: And so you would have
6 to have -- I mean, if you get below a certain level
7 and you cannot maintain it, you have to shutdown the
8 plant and fix it.
9 MR. ROSEN: Well, it's also true I
10 think, Mario, that you wouldn't expect to have both
11 tanks leak at the same time.
12 CHAIRMAN BONACA: Absolutely. So you
13 have a number of --
14 MR. FORD: Okay, guys. But you're making
15 the answer for them, and I asked them have you a
16 done a consequences?
17 CHAIRMAN BONACA: No, no. I think there
18 are issues where this is very significant because
19 you have much less margin. Here is an example where
20 you do have more margin than most cases, because you
21 have two and you do have probably small leakage in
22 the beginning. If that is to happen, you probably
23 can monitor it.
24 But I agree with you, the issue in
25 general, it's a significant issue for the whole

1 industry, making these projections based on past
2 experience.
3 I had some other questions here. One I
4 would like to ask is about your neutron noise
5 monitoring system. Now, that's a system that is in
6 place to detect and monitor significant loss of
7 axial preload and core support barrel -- we just
8 heard from another applicant for license renewal,
9 that program was very significant on their site to
10 identify in time thermal shield problems. They
11 fixed those problems. And they're using it to
12 prevent further problems to develop.
13 I see that you're not including this
14 program in your license renewal or crediting the
15 program for it?
16 MR. WROBEL: No, we did not credit that
17 program for license renewal the way we do our 10
18 year ISI and our internals. We haven't really had
19 any comparable issues --
20 CHAIRMAN BONACA: But you still have
21 this program implemented on site?
22 MR. WROBEL: I don't believe there is a
23 program on site.
24 CHAIRMAN BONACA: Well, it's called
25 neutron noise monitoring.

1 MR. WROBEL: Neutron noise monitoring.
2 No, we don't.
3 CHAIRMAN BONACA: D2-120.
4 MR. WROBEL: Yes, we don't have that. I
5 think the application should have said that that's
6 the name of the program but we don't have it and we
7 don't credit it.
8 MR. ARRIGHI: This is Russ Arrighi the
9 program manager.
10 In Ginna's application I think every
11 GALL program, I think the applicant had a bullet
12 that there is such a program. But in Ginna's case,
13 even though they mention the program, they said it's
14 not utilized at Ginna. So it's essentially a place
15 holder.
16 CHAIRMAN BONACA: Okay. So you do not
17 have it at all. I misunderstood.
18 MR. WROBEL: Sorry.
19 CHAIRMAN BONACA: I thought that still
20 you had the program and I just -- all right. So you
21 do not have that program?
22 MR. WROBEL: We don't have a program
23 like that.
24 CHAIRMAN BONACA: Okay. And you do have
25 a thermal shield?

1 MR. WROBEL: Yes, and it's in scope.

2 CHAIRMAN BONACA: Okay. Yes, I imagine

3 so.

4 Several more questions I wanted to ask

5 at this stage.

6 Okay. A couple of questions for my

7 consultant that performed the review here and sent

8 some comments out. One is relating to the special

9 blackout and the confidence that we have that based

10 on the experience -- I think we'll hear from that

11 from the staff.

12 Fire protection. We noted that you do

13 not include jockey pumps, for example, in scope.

14 MR. WROBEL: That's correct. That's one

15 of the open items.

16 CHAIRMAN BONACA: That's right. And I

17 just am trying to understand the logic. If I

18 understand it, NFPA requires that you have jockey

19 pumps. They maintain pressure, doesn't it?

20 MR. WROBEL: It recommends that you have

21 them, it doesn't require it. We have a large

22 pressure maintenance tank that we feel is enough --

23 has enough of a size that we don't need really need

24 the jockey pumps to maintain pressure. And, again,

25 the intended function is for the pumps to operate

1 just fine without a jockey pump.

2 CHAIRMAN BONACA: But essentially the

3 function of jockey pumps was the one of maintaining

4 pressure maintenance function.

5 MR. WILSON: This is Dave Wilson,

6 Rochester Gas & Electric.

7 Our configuration at Ginna Station,

8 although includes a pump that could be considered as

9 a jockey pump. It's actually a key filled pump for

10 this tank. And the way the system is configured I

11 think is unique in that the staff hasn't recognized,

12 necessarily, how the physically plant is laid out.

13 What we have is a 15,000 gallon over

14 pressure tank on the discharge of the pumps.

15 CHAIRMAN BONACA: Okay.

16 MR. WILSON: And that tank maintains

17 10,000 gallons of water which makes up for system

18 leakage, or whatnot. The tank has a couple of ways

19 of being refilled. One is this, what we call a

20 booster pump which the staff calls a jockey pump.

21 So if the tank gets a low level, it can be through

22 that.

23 CHAIRMAN BONACA: Yes.

24 MR. WILSON: The other method is when we

25 run our fire pumps for maintenance, particularly the

1 motor driven fire pump, we can refill the tank
2 during that running evolution.
3 And so the position that the staff has
4 taken is because we have something called a jockey
5 pump, and we're reviewed against Branc Technical
6 Position 951, which is the early fire protection
7 requirements, they've said that because Branch
8 Technical Position 951 endorses NFPA 20, then
9 therefore we must endorse NFPA 20 even those
10 configuration is not an NFPA 20 configuration.
11 So that the argument there is not that
12 we need a pressure maintenance source. It's whether
13 or not this key filled pump is in fact a jockey pump
14 required by NFPA 20 --
15 CHAIRMAN BONACA: I understand now. But
16 it's still an open issue?
17 MR. WILSON: It's still an open issue.
18 MR. HERRICK: We'll go into that.
19 MR. ARRIGHI: Yes, we'll discuss it.
20 CHAIRMAN BONACA: Okay. Okay.
21 MR. LEITCH: While you're on the
22 protection of fire protection -- go ahead, Mario,
23 you finish.
24 CHAIRMAN BONACA: No, no. You go ahead.
25 MR. LEITCH: I guess I had a couple of

1 questions about fire protection that related to the
2 inspection of June 23 through 26th. Is the staff
3 going to cover that? There were a couple of issues
4 with respect to frequency of Halon testing,
5 frequency of fire door inspections, frequency of
6 hydrant inspections?
7 MR. ARRIGHI: Yes. This is Arrighi, the
8 program manager --
9 MR. LEITCH: There seem to be a lot of
10 lacking areas there in the fire protection.
11 MR. ARRIGHI: Yes, we have a slide on
12 that. If you want, I'll discuss it now or later.
13 MR. LEITCH: No, we can wait until that
14 part of the presentation.
15 Excuse me, Mario.
16 CHAIRMAN BONACA: Oh, no. No problem.
17 The other question I had was relating to
18 the all volatile water treatment building. That
19 building houses the tech support center it says.
20 MR. WROBEL: That's correct.
21 CHAIRMAN BONACA: And it is not designed
22 to resisted high winds or tornado/missiles. And the
23 question that this consultant had when he reviewed
24 was, in fact there is a requirement for the tech
25 support center to be designed to withstand. So how

1 do you have this tech spec? Do you have a backup --
2 MR. WILSON: This is Dave Wilson, RG&E.
3 The technical support center is an
4 addition to our treatment water building and it was
5 added to satisfy the requirements of NUREG-0737 in
6 order to have an emergency planning space, so to
7 speak, and we put a diesel in there for backup power
8 and whatnot. There were no requirements to make
9 that seismic or to tornado missile protect it. If
10 we had a seismic event or a tornado event, then the
11 control room is where we operate from.
12 So the building is non-seismic and
13 nonsafety related. It is, however, important enough
14 to be within the scope of license renewal.
15 CHAIRMAN BONACA: I thought --
16 MR. WROBEL: I'm not sure where the
17 qualification is. I know that it's required to be
18 habitable, as habitable as a control room. But I
19 don't believe that it need to be designed for
20 external phenomena.
21 CHAIRMAN BONACA: I thought the
22 emergency plan required that, but maybe I'm wrong.
23 MR. WROBEL: Not to our knowledge.
24 CHAIRMAN BONACA: So you have a tornado,
25 you got a missile and it gets knock out, you have to

1 rely on the control room?

2 MR. WILSON: Yes, sir, that is correct.w

3 We also have an EOF facility that's about 25 miles

4 away that probably the same tornado wouldn't hit it.

5 CHAIRMAN BONACA: Yes. Okay. I'd like

6 to find out more if it was a requirement, in fact,

7 of the emergency plan or not.

8 MR. ARRIGHI: This is Russ Arrighi.

9 I don't have the answer for that right

10 now, but I'll write it down and get back to you.

11 CHAIRMAN BONACA: Okay. Yes.

12 At this stage, I don't have anymore

13 questions for you.

14 MR. WROBEL: I'm over my hour, so let me

15 get through this last one.

16 CHAIRMAN BONACA: Yes.

17 MR. WROBEL: We had 29 how level

18 commitments. It was actually 31. There were 2 more

19 that were added that were not the docket yet. So

20 these were 29 that were dockets. There's actually

21 31 commitments.

22 All of the commitments have been put

23 into what we call our CAT system, our commitment

24 action tracking system. They've all been assigned

25 responsible personnel.

1 I would say about one-third to one-half
2 of the commitments have already been completed. We
3 plan on completing the vast majority of the
4 commitments within the next couple of years. We're
5 not going to wait until 2009.
6 Some of the commitments, and George can
7 explain this even better, he sequenced them between
8 now and 2009 to fall within a natural, like the
9 tendon testing for 2005. We picked 2005 because
10 that's when our next tendon testing test is
11 scheduled. So, well, we're doing a lift off test
12 that we would retention them at the same time. So
13 that's why 2005 was picked. We probably could have
14 done it out to 2007 or eight or nine.
15 So they're all assigned. They're
16 internal documents. The fact that we had a matrixed
17 organization, we don't really have a license renewal
18 project person to turn over, because all the
19 commitments were made in concert with the primarily
20 engineering people that were assigned to the
21 project. So there's not a major turnover process
22 developed.
23 We do have a program to configuration
24 management process that we're developing now. We're
25 finding some of the ones that are not specifically

1 assigned, but in detail. We have that process. We
2 haven't written a procedure yet, but we're following
3 them on an individual basis for now until we get the
4 whole program integrated with our configuration
5 management information system. And we don't -- you
6 know, they're all being followed in CATS right now,
7 so I don't see any real issues in long term
8 maintenance and meeting all of our commitments.
9 CHAIRMAN BONACA: Okay.
10 MR. WROBEL: They're all scheduled with
11 due dates.
12 CHAIRMAN BONACA: And one last question.
13 If you look at the SER on number of systems, the
14 staff performed the review of the application,
15 looked at your methodology for the defined
16 components is scope. And then they identified cases
17 where they disagree with you. They informed you,
18 and you agreed that something else had to be added
19 to the scope, there were a number of changes that
20 were identified by the staff.
21 And, you know, we have to make a
22 determination, as the staff has to do, that there is
23 reasonable assurance that the items in scope have
24 been identified. So I have the question also for
25 the staff later on. You know, how based on the fact

1 that the staff, every time they perform the review
2 of an LRA they find enough additional items that are
3 in scope, and the applicant agrees. A thorough
4 reviewer like yourself is left with the question in
5 the mind, you know, do we have reasonable assurance
6 to the fact that items in scope have been identified
7 and proper programs have been implemented. And I
8 would like to have your comments.
9 MR. WROBEL: Sure. We did a review again
10 today looking at all the RAIs. We identified three
11 items that were put into scope because of the staff
12 review to date. Now, we have a couple of open
13 items. Those were the house heating boiler in the
14 screen house where it as a (a)(2) issue. We have a
15 safe shutdown methodology that includes being able
16 to safely shutdown without the screen house at all.
17 We have a separate independent system that we can
18 shut down. So we felt that even if the boiler
19 degraded under (a)(2) and damaged the surface water
20 system, that we could still safely shutdown.
21 What the staff pointed out in their
22 review is that if the boiler degraded at the time
23 that we were having recovery from a loss of coolant
24 accident, that we would not be able to. So we
25 hadn't put a house heating boiler degradation from

1 aging management program together with the recovery
2 from loss of coolant accident together. We didn't
3 do the analysis. But I think we have a pretty low
4 probably. From a strictly(a)(2) reading it would
5 have fallen in scope. And so we decided we would
6 put that in scope.
7 The other two we were disagreeing with
8 the staff for a while. We currently agree that we
9 would have spent fuel pool makeup from the refueling
10 water storage tank. We had called that a
11 hypothetical event, and we didn't feel a
12 hypothetical event needed to be in scope. We
13 decided it would be prudent to put that into scope.
14 It was a very minor amount.
15 CHAIRMAN BONACA: Yes.
16 MR. WROBEL: And the CCW, the rest of
17 the component cooling water system, was really
18 already being covered by component cooling water
19 system program.
20 So those are the only three, other than
21 some typographical errors. And I think that's what
22 you're finding in the RAI responses is that there
23 were some errors that were -- when we did our
24 initial drawings that we sent in, and there were
25 some errors when we were translating the magenta

1 lines to cyan lines. There were some errors that
2 were made there. And they were covered very quickly.
3 CHAIRMAN BONACA: Okay. In fact, don't
4 worry about those. Because, I mean, I don't worry
5 about where you have a logical disagreement. I
6 mean, you may be right. And I think you have to
7 present your perspective and position, and that's
8 only fair.
9 I'm worrying more about where there, for
10 example, the ends of pipe missed purely because
11 somebody made a mistake and then they're excluded.
12 And that's really where --
13 MR. WILSON: This is David Wilson,
14 Rochester Gas & Electric.
15 CHAIRMAN BONACA: Yes.
16 MR. WILSON: I'd like to field that for
17 a second.
18 There's really two administration issues
19 that happened, I think just because of the timing of
20 our application.
21 The first one and most significant to
22 your question or comment was when we originally had
23 discussed with the staff how to prepare and package
24 and transmit the application, we had prepared and
25 packaged the application with a set of drawings that

1 had the colors of magenta showing the scope. And
2 about 5 days before we were scheduled to submit, the
3 staff realized that magenta was not a color that
4 they could use for the rank and file reviewers that
5 would print out on a laser jet printer. It would
6 show no color, and they wouldn't be able to see the
7 boundary. So we had to go back very quickly and
8 modify the drawings, which was a total redrew. And
9 errors were introduced in that. Those errors were
10 not reflected in the actual analysis that was in the
11 application.
12 And we had had a discussion with the
13 staff. And, in fact, put in our application that
14 this was going to happen. Everybody recognized it.
15 But we felt at the time because of the data in the
16 application was correct and reflected the correct
17 boundaries, that we would be able to quickly
18 navigate and get through this. And, in fact, we
19 did. It was not a significant issue with the issue.
20 CHAIRMAN BONACA: Okay.
21 MR. WILSON: The second administrative
22 issue was purely GALL related, and that's in that we
23 had to both educate ourselves and we had a staff
24 learning how to use the GALL. And when we were
25 translating components that were within the scope of

1 license renewal -- see, the way it works, is a
2 reviewer actually has a drawing in front of him. He
3 can put his finger on a component and say tell me
4 about valve 123. But nowhere in the application do
5 you see valve 123. You see carbon steel components
6 and spent fuel systems.
7 And so there's a lot of discussion that
8 goes back and forth using the standard review plan
9 on where is that component exactly in your
10 application. And because we had to do this in a
11 public venue, the discussion takes the form of an
12 RAI.
13 But, you know, they're easy enough to
14 work through. And, in fact, we found very few
15 other than what was discussed omissions. And, of
16 course, then the region comes in after the NRR staff
17 is done and does their own review.
18 And so we understand what you're seeing,
19 but we don't think it's representative of a
20 technical problem.
21 CHAIRMAN BONACA: I appreciate it.
22 MR. WROBEL: All right. That was our
23 last slide.
24 You have station blackout covered in
25 yours?

1 MR. ARRIGHI: I have a slide I'll put up
2 if they need to see the boundaries.
3 CHAIRMAN BONACA: We're going to take a
4 break. We are due for a break at 2:45. I don't know
5 if we want to break now and then go through the
6 staff presentation?
7 MR. ROSEN: I'd like a break.
8 CHAIRMAN BONACA: You would like a
9 break? Let's take a short break. Let's together
10 here again in ten minutes, would you say?
11 (Whereupon, at 2:00 p.m. a recess until
12 2:15 p.m.)
13 CHAIRMAN BONACA: Okay. Let's get back
14 into the session.
15 And now we have Mr. Arrighi that is
16 going to summarize for us the SER.
17 MR. ARRIGHI: Good afternoon. My name is
18 Russ Arrighi, I'm the project manager for the safety
19 review of Ginna plant license renewal application.
20 With me is John Rowley. John assisted
21 me in putting together the SER, and he's going to
22 make the presentation on Section IV.
23 Also we have Mike Modes from Region 1.
24 He's a team leader at the region 1 Inspection Teams,
25 and he'll present the section on those inspections.

1 CHAIRMAN BONACA: Okay.

2 MR. ARRIGHI: The application for Ginna
3 was submitted in July 2002. Ginna is a two loop PWR
4 located in Wayne County, New York. As one of the
5 oldest PWRs, Ginna did go through the Systematic
6 Evaluation process review by the NRC. The
7 Systematic Program was utilized by the staff, the
8 review that document. It was utilized during the
9 scoping and screening methodology audit. Also the
10 staff review of scoping and screening in
11 headquarters and during the regional inspection.

12 That Systematic Evaluation Program, SER,
13 was used in the same manner as the UFSAR in that it
14 established the current licensing basis of the
15 plant.

16 RG&E requested a 20 years extension for
17 Ginna through September 18, '29. Ginna's the third
18 plant that implemented the GALL process with Fort
19 Calhoun being one and Robinson being the other.

20 The staff review of the license renewal
21 application resulted in eight open items. Four of
22 those open items are presently resolved. The
23 applicant has provided responses for the other open
24 items. Preliminary review indicates that two or
25 three of those other open items can be resolved in

1 this preliminary review. So, that's why we did not
2 show that they are resolved.
3 There are seven confirmatory items. One
4 of the confirmatory items, and we'll talk about
5 these, based on a response the applicant provided to
6 one of the open items, this confirmatory item is now
7 considered essentially an open item. And when I get
8 there in the application, I'll talk about that in a
9 little detail.
10 The LRA resulted in several components
11 being in scope. The applicant mentioned those. The
12 heating steam boiler, the component cooling water
13 piping and the fueling water storage tank, the
14 makeup supply to the spent fuel pool.
15 As the applicant stated, a lot of the
16 other components that you indicated, we had a number
17 of RAIs bringing stuff into scope. Our questions
18 with the applicant, they said they are in our
19 database on site. They are already in scope. But,
20 again, we had to get that on the docket, so that's
21 where a lot of those things are that made the review
22 seem like there was a lot of additional components
23 added.
24 MR. LEITCH: Russ, is that house heating
25 boiler sometimes referred to as the screen house

1 steam heating boiler or is there a difference?

2 MR. ARRIGHI: Yes, steam heating boiler.

3 I think we might have used the term steam heating

4 boiler in the SER. I don't know all the

5 terminology.

6 MR. LEITCH: I thought I saw it a screen

7 house.

8 MR. WROBEL: It's in the screen house.

9 Yes, it is the same boiler. It's physically in the

10 screen house.

11 MR. LEITCH: Okay. Same boiler.

12 MR. WROBEL: Yes.

13 MR. LEITCH: Okay. Thank you.

14 MR. ARRIGHI: Also, as result of the

15 SER review there was one new aging management

16 program added, and that was in the electrical

17 section. It had to do with electrical cables not

18 subject to EQ requirements, used an I&C circuit.

19 That's using circuits with sensitive low voltage

20 signals, and that program was added based on staff

21 questions.

22 For Ginna, we did have 224 RAIs were

23 issued at Ginna. This is a reduction from the

24 previous applications, however it is still a high

25 number. Again, due to the three GALL applications

1 being submitted relatively close together, the full
2 benefits of GALL weren't realized.
3 MR. ROSEN: When is that going to wear
4 out?
5 MR. ARRIGHI: Probably after at least
6 Summer.
7 MR. ROSEN: Summer. We get another pass
8 on Summer and then after Summer?
9 MR. ARRIGHI: Yes, we'll see what
10 happens then. But with the new process, we expect
11 that the number of RAIs should be reduced.
12 CHAIRMAN BONACA: Yes. We review Summer
13 in the winter. In mid-December. And then --
14 MR. ROSEN: To warm us up.
15 CHAIRMAN BONACA: -- that no open items,
16 I understand.
17 MR. ARRIGHI: Yes. Summer has no open
18 or confirmatory items.
19 All right. The NRC audits and
20 inspections, there were two inspections and two
21 audits performed at Ginna. Each of these will be
22 discussed as we progress through the presentation.
23 Structures and components. The staff
24 review and audit determine that the applicant's
25 scoping and screening methodology satisfied the

1 rule. During the audit, again, as a result of the
2 audit we did bring in the screen house, the heating
3 steam boiler in scope. And, again, the applicant
4 discussed that based on the SEP seemed to have an
5 alternate means to shut down the plant. Alternate
6 service water supplied to the diesels.
7 Plant level scoping results. A staff
8 review of this section determined there were no
9 plant level systems, structures or commodities
10 omitted from the application.
11 Scoping and screening of mechanical
12 systems. Before I go a little further on this
13 slide, I know a question normally arises regarding
14 the pressurized spray head. The pressurizer spray
15 head at Ginna is not in scope. The defuser portion.
16 The spray nozzle --
17 CHAIRMAN BONACA: The spray nozzle is?
18 MR. ARRIGHI: -- is in scope and that's
19 the pressure boundary portion.
20 CHAIRMAN BONACA: Now, is this normal?
21 MR. ARRIGHI: Yes.
22 CHAIRMAN BONACA: The nozzle is in
23 scope?
24 MR. ARRIGHI: Yes. The pressure
25 boundary function of the spray is always in scope at

1 all applications.

2 CHAIRMAN BONACA: Okay.

3 MR. ARRIGHI: Again, at Ginna and I

4 think at the previous applications, the failure of

5 the pressurizer spray head wouldn't prevent the

6 safety accomplish to depressurize the plant. As part

7 of Ginna's current licensing basis, they rely on an

8 alternate means to depressurize a plant for fire

9 protection safe shutdown analysis. And the way they

10 depressurize would be through their PORVs. Again,

11 normal plant operation, they would use the

12 pressurizer. And, again, any indication that they

13 had a problem with the pressurizer function, again,

14 normal plant operations the operators would be aware

15 of it, it would go in their corrective action

16 process and they would fix it. But for the purpose

17 of license renewal, again, the current licensing

18 basis to depressurize during a cool down is the

19 PORVs.

20 Okay. Section 2.3 Scoping and --

21 CHAIRMAN BONACA: Could you go back to

22 that? This is for the fire, right?

23 MR. ARRIGHI: Yes. For the fire

24 protection safe shutdown analysis.

25 CHAIRMAN BONACA: Okay. Okay.

1 MR. ARRIGHI: They rely on the PROVs.
2 CHAIRMAN BONACA: The PROV.
3 MR. ARRIGHI: Okay.
4 MR. LEITCH: I guess there's one issue
5 that I find just a little confusing in the SER in
6 page 1-10 there's a statement made that redundancy
7 is not an adequate basis in itself to exclude a
8 system from the aging management review. And I
9 guess --
10 MR. ARRIGHI: If the current licensing
11 basis specifies it be redundant equipment, then all
12 that equipment if it's part of the CLB, would need
13 to be in scope. Just because there are other
14 components that can perform the same function, those
15 types of components, you know, you might have ten
16 means to fill up a tank. If the CLB relies on two
17 of them, both of those means have to be in scope,
18 not the remaining ten. Or in the case of the CLB
19 only requires one method, just because you have
20 other methods to perform that function if you're not
21 managing the aging, we can't credit those and we
22 have to rely on the CLB. And therefore, those
23 systems that are defined by the CLB have to be in
24 scope.
25 MR. LEITCH: So I'm just trying to go

1 back to this pressurizer spray nozzle. There are
2 other methods of depressurizing, but --
3 MR. ARRIGHI: And the licensing basis of
4 this plant relies on the PORV, the power operated
5 relief valve.
6 MR. LEITCH: Okay.
7 MR. ARRIGHI: So therefore the staff,
8 since it's part of the CLB, can require that that
9 component be in scope. And if that component is not
10 part of the design in the CLB, then we can't rely on
11 it and it would essentially be -- we can't force the
12 applicant to put it in license renewal.
13 MR. LEITCH: Okay.
14 CHAIRMAN BONACA: Normally the position
15 taken is that if the spray head fails, you can still
16 depressurize with a spray at a lower rate, but still
17 adequate to get into closer down with 24 hours, or
18 whatever the requirement is. And now this is a new
19 one, I haven't seen before, you use a PORV to
20 depressurize as a means. I guess I hang my hat more
21 on still using the pressurizer.
22 MR. ARRIGHI: I'm sure the applicant
23 could probably perform that same analysis and make
24 the same case.
25 CHAIRMAN BONACA: Right. Yes.

1 MR. ARRIGHI: But their licensing basis
2 was clear in this regard.
3 CHAIRMAN BONACA: Yes. Okay.
4 MR. GILLESPIE: Frank Gillespie with
5 NRR.
6 This comes up. The safety case is first
7 versus the compliance case. And part of that safety
8 case is, it wasn't relied upon in the CLB for a
9 reason. And the reason it wasn't relied upon is
10 some of the things you articulated.
11 The other thing is the spray heads, and
12 this is only the heads, it's a low-DP system and
13 it's used frequently. So while it is a passive
14 component, it's kind of in active use. And so now
15 you have to postulate the sudden degradation of this
16 head falling off, not in daily use. At the same
17 time you have the accident that needs it, and you
18 still have water flow through a depressurizing the
19 pressurizer anyway.
20 So the safety reason is the first reason
21 why it's out, but that manifests itself in not being
22 in the current licensing basis. So it's not just
23 compliance, it is safety.
24 MR. ARRIGHI: Again, Section 2.3,
25 mechanical system review. The staff review of this

1 section resulted in three open items and three
2 confirmatory items. Three of those open items have
3 been resolved.
4 Several components that were initially
5 omitted from the scope, again, we stated these
6 earlier. Steam heating boiler, component cooling
7 water piping and spent fuel pool makeup path were
8 all added to scope based on the staff review.
9 Again, the steam heating boiler was brought in as a
10 result of the scoping and screening methodology
11 audit questions that were asked them. The other two
12 components, CCW piping and spent fuel pool makeup.
13 they were added as a result of applicant's response
14 to these open items that follow.
15 Open item 2.3.3.2-1 is resolved. The
16 staff identified that failure of out-of-scope CCW
17 piping could result in failure of the system and the
18 ability to cool down the plant.
19 The piping in question here is nonsafety
20 related piping that is subject to AMR and review
21 that ends at an open boundary valve. In this case
22 it's a 3 quarter inch valve piece of pipe that the
23 applicant had an open boundary valve. And initially
24 they deemed that hey would sufficient time to
25 isolate those valves prior to losing the component

1 cleaning water surge tank and have sufficient
2 capacity to water. The staff asked the applicant to
3 address the basis to support that information; what
4 size leak, etcetera.
5 Preliminary review of different types of
6 failure, the applicant came back and said as a
7 result of your question, we will add in whole
8 component cooling water system piping down stream of
9 that valve. So the CCW system is in scope of
10 license renewal at this point in time.
11 Open item 2.3.3.3-1. The staff
12 identified that the spent fuel pool makeup source
13 was not in scope. Again, the applicant's position
14 was initially that it would take over 5 hours. If
15 the hypothetical event, it would take over 5 hours
16 to initiate boiling and then over 2 days before you
17 need to add water. The applicant didn't account for
18 potential leaks in the spent fuel pool liner. And,
19 again, the rerack of the spent fuel was based in
20 part on having a makeup water supply to the spent
21 fuel pool.
22 As a result of communications with the
23 applicant, they agreed that they would add in the
24 feeding water storage tank into scope, and therefore
25 this item has been resolved.

1 CHAIRMAN BONACA: So the issue was
2 whether or not a leak from the pool had to be
3 addressed?
4 MR. ARRIGHI: Correct.
5 CHAIRMAN BONACA: All right.
6 MR. ARRIGHI: Exactly.
7 CHAIRMAN BONACA: I mean, the design
8 basis of the spent fuel pool was not clear about
9 that?
10 MR. ARRIGHI: In some of the
11 documentation it talks about a hypothetical failure
12 and whatnot. And it doesn't really address leakage.
13 During our review of some, you know, rerack analysis
14 and just the staff thought it was needed, that they
15 needed to address leakage.
16 CHAIRMAN BONACA: Has this been done for
17 the other previous applications?
18 MR. ARRIGHI: I believe all the other
19 applicants have a makeup source to the pool. I'd
20 have to ask the reviewer.
21 MR. JONES: This is Steve Jones, Plant
22 Systems Branch of NRR.
23 In the case of Ginna, the earlier
24 amendments regarding spent fuel capacity or pool
25 expansion did address leakage through the liner and

1 relying on makeup to maintain pool level.

2 Ginna has a somewhat different licensing

3 basis, in that they have a temperature limit on the

4 pool below boiling, so they rely on the cooling

5 system to maintain the temperature limit. And I

6 think that's the -- in general we bring the makeup

7 systems into scope based on boiling. In this case it

8 was to address leakage that could render the cooling

9 system inoperable and then you would not be able to

10 maintain the temperature below the design

11 temperature.

12 CHAIRMAN BONACA: All right. Okay.

13 MR. LEITCH: Can we talk about the steam

14 heating system in the diesel generator building? It

15 seems as though what they did was see where the

16 steam heating system could fail in such a way that

17 it would damage safety related system. Even though

18 the steam heating system in itself is not safety

19 related, it could fail in such a way that it would

20 damage the building or damage safety related

21 equipment. And those parts of it that could fail

22 were brought into scope.

23 Now, I guess a number of applicants that

24 we've see in the past have said, well, basically if

25 you have a two over one kind of a situation if

1 anything in that building would be brought into
2 scope. It sounds like what they did here was part
3 of the steam heating system and the diesel generator
4 was brought into scope and other parts of it were
5 not. I mean, I would think that in that kind of a
6 situation, I think what we've seen most previous
7 applicants do is just bring the whole steam heating
8 system in the diesel generator building into scope?
9 MR. WILSON: This is David Wilson,
10 Rochester Gas & Electric.
11 And, in fact, that is what occurred. I
12 think what you're seeing in our case is we're the
13 first applicant to actually address the nonsafety
14 specs safety ISG in their application.
15 And so the original thrust, when we did
16 our original reviews, we did an analytical review
17 based on our current licensing basis, which did not
18 identify house heating steam as being in scope.
19 Then we did a spacial analysis that identified in
20 certain areas of the plant house heating steam could
21 in fact cause a failure that would affect the safety
22 function. That brought the entire house heating
23 steam system into scope, but you screened out the
24 components that didn't cause that failure.
25 So, the system, house heating steam, was

1 in scope but only the components in the diesel rooms
2 initially were within the scope of license renewal.
3 MR. LEITCH: Yes.
4 MR. WILSON: And then later on, based on
5 RAIs and the audit which identified that post-
6 accident we could have a failure in the screen house
7 that would affect our ability to manage the
8 accident, we bought in additional components. But
9 the system was already in scope in the original
10 application.
11 MR. LEITCH: Okay. Okay. thanks. I
12 understand.
13 MR. ARRIGHI: Item 2.3.3.6-1 is the
14 jockey pump. The staff identified that the fire
15 service water booster pump of the jockey pump was
16 not in scope. Loss of this function could cause of
17 the fire pumps and damage them, therefore the staff
18 thought it should be in scope of the rule.
19 And you heard the applicant state that
20 they do have the pressurized storage tank, which is
21 a 1,000 gallon tank pressurized with 100 pound air.
22 And that's what they state maintains the pressure in
23 the system.
24 Again, initial discussions the applicant
25 included the tank for personal safety reasons and it

1 wasn't initially because of maintaining the pressure
2 in that tank.
3 The staff's review is that the
4 applicant's 1979 submittal for the fire protection
5 evaluation and the FSAR are both clear, and they
6 both state that both the jockey pump and the storage
7 tank maintain system pressure, not just one.
8 Therefore, it's the staff's position that both the
9 jockey pump and the storage tank need to be in scope
10 of the rule.
11 Again, the applicant and the staff are
12 in a little disagreement at this time. And we're
13 working toward resolution on this item.
14 CHAIRMAN BONACA: Is this one of the
15 outstanding?
16 MR. ARRIGHI: Yes, this item is not
17 resolved and this is still --
18 CHAIRMAN BONACA: One of the two?
19 MR. ARRIGHI: Yes. This is essentially
20 one of two open items that we have that we're still
21 evaluating.
22 Confirmatory item. This has to do with
23 the component water surge tank, the makeup not being
24 in scope. It was the initial response from the
25 application on the docket said that the makeup water

1 source would be included in scope. However, due to
2 the open item regarding the component cooling water,
3 the -- related to open boundary valves. By putting
4 the whole component cooling water system in service
5 in scope.
6 It's the applicant's position that the
7 makeup water supply to the surge tank does not need
8 to be in scope and that the component cooling water
9 surge tank has adequate capacity to accommodate for
10 any leaks.
11 It's the staff position that it's the
12 USSAR and the safety evaluation review of the
13 Systematic Evaluation report both specify that you
14 can postulate a leak following an accident. And in
15 there it goes on to state that the makeup capability
16 should be able to cope with normal system leakage
17 post accident. Therefore, it's the staff's position
18 that the makeup water is part of the current
19 licensing basis and that makeup supply is required
20 to be in scope.
21 And, again this is a second item that
22 the staff and the application are discussing.
23 CHAIRMAN BONACA: But you say though
24 there, was initially brought into scope and now?
25 MR. ARRIGHI: Well, again, when we put

1 the SER on the, with open arms in the docket, at
2 that time we had a response on author affirmation
3 from the applicant that said yes we will include the
4 makeup supply. But at that point in time they
5 didn't have an aging management program to monitor,
6 to mitigate aging of the whole component cooling
7 water system. So they thought, all right, to
8 accommodate any leakage, since that piping's not in
9 scope, we'll have the makeup. But now that they've
10 added the whole system in scope, they said that
11 packing leakage would be small and therefore our
12 surge tank would have adequate capacity.
13 Section 2.4 structures and structural
14 components. There were no open or confirmatory items
15 in this area.
16 For Section 2.5 electrical systems and
17 instrumentation and controls. The electrical
18 components were evaluated on a plant wide basis
19 versus system basis. There was one open item in
20 this area. The staff identified that two cables
21 from off-site power that brings power to safety
22 buses which power the service water pumps were not
23 in scope of license renewal. And the staff asked
24 can the applicant get to cold shutdown without the
25 use of service water pumps.

1 The applicant stated that they have the
2 capability to get to a safe shutdown condition
3 without the use of service water. On a station
4 blackout, they would essentially use the aux
5 feedwater to supply water to the steam generator to
6 go solid and cool down through a feed and bleed on
7 the secondary side. And use the PORVs, essentially,
8 to depressurize.
9 So it's the applicant's position that
10 those components are not relied on. The service
11 water pumps are not relied on as part of the current
12 licensing basis to get to a cold shutdown condition.
13 MR. ROSEN: Are the PORVs qualified at
14 passing water, solid water?
15 CHAIRMAN BONACA: Good question.
16 MR. ARRIGHI: I don't know. PORVs
17 qualified?
18 MR. WILSON: This is Dave Wilson,
19 Rochester Gas & Electric.
20 The PORVs in the pressurizer, they're
21 only used to depressurize the RCS later on in
22 determination of this evolution. The feed and bleed
23 actually occurs using auxiliary feedwater into the
24 steam generator and then draining the water out of
25 the steam generator through manual valves, not

1 through main steam safety valves or main steam
2 atmospheric relief valves.
3 MR. ROSEN: So it's the secondary side?
4 CHAIRMAN BONACA: It's a secondary.
5 MR. WILSON: Secondary side. Correct,
6 sir.
7 MR. ARRIGHI: And the PORVs would just
8 maintain the depressurization for the primary,
9 And the applicant did supply the
10 response to that. And the staff is currently
11 reviewing this issue.
12 Scoping and screening summary. Pending
13 the final resolution of the four open items, being
14 the docketed information and resolving the other
15 open item, the scoping and screening results include
16 all structure system component within the scope of
17 license renewal and subject to an AMR.
18 At this point of the presentation, I
19 would now like to turn it over to Mikes Modes. He's
20 with Region 1. He was the team leader that did the
21 inspections at the site, the scoping inspection and
22 the aging management review inspections.
23 MR. MODES: This is Michael Modes.
24 We followed the prescribed license
25 renewal guidance insofar as the inspections were

1 concerned using primarily IP 71008. And the
2 inspection plan was developed specifically for that
3 site. It was the first goal at Region 1 I've ever
4 done. So the inspection started with what the goal
5 called for and worked its way completely through to
6 the actual procedure reviews and aging reviews at
7 the plant, interviews with individuals and
8 walkdowns.
9 And we used a number of individuals in
10 the plant in the region. We tried to use a
11 structural individual with that kind of --
12 metallurgical, mechanical and operations. We's
13 borrow heavily from the experience of the resident
14 inspector.
15 Next slide.
16 For the scoping and screening, for
17 example, it was a pretty clean inspection. It seemed
18 to be more a matter of timing. We appeared to have
19 arrived when there was a review being performed, for
20 example, by the fire protection engineer to
21 determine whether or not the right number of valves
22 and stuff were being called out in the scoping.
23 There was a corrective action generated as a
24 consequence of the inspection to bring closer
25 correspondence between the two databases.

1 We also found in example for the
2 screening for the aging inspection that a lot of the
3 stuff was more a degree of refinement. We had sort
4 of caught them in a point where they were
5 transitioning from the processing of being
6 philosophical about aging license to the actual
7 implementation. So there were a number of
8 corrective actions that were identified in the
9 nature, per se.
10 They were taking advantage of a certain
11 program that contained a procedure that didn't
12 clearly identify, for example, what aging mechanisms
13 ought to be regularly reviewed for bolting. So in
14 that regard, we had to dig pretty deeply to come up
15 with any issues. The documentation was
16 comprehensive. They have excellent database. And
17 it's been my personal experience with Ginna there's
18 a lot of pride in craftsmanship. You don't see a
19 large turnover in personnel, so you get a lot of
20 corporate knowledge answers. Pretty good
21 inspection.
22 MR. LEITCH: Mike, were you involved
23 with the June inspection? I'm a little confused. I
24 have some questions regarding the June inspection.
25 MR. MODES: The scoping?

1 MR. LEITCH: Yes.

2 MR. MODES: Yes.

3 MR. LEITCH: Okay. It seemed to me that

4 there were a number of issues there dealing with

5 fire protection and with the fire program.

6 MR. MODES: Yes.

7 MR. LEITCH: I guess a number of those

8 had to do with frequency, that is the frequency of

9 Halon testing, the frequency of fire door

10 inspection, the frequency of hydrant inspection.

11 Also some issues concerning the frequency of flow

12 testing, qualification of personnel and so forth.

13 I guess I came away with a little bit of

14 an uneasy feeling regarding the fire protection

15 program. And I don't know if that's justified or

16 not, or --

17 MR. ARRIGHI: Can I answer that?

18 MR. LEITCH: Go ahead.

19 MR. ARRIGHI: I think the inspection

20 you're talking about is the aging management program

21 audit, which is a little later, which the staff

22 reviewed the project manager and a number of people

23 from the staff.

24 MR. LEITCH: Right.

25 MR. ARRIGHI: And, again, I'll be

1 getting to this. But we were doing a consistency
2 with GALL audit to make sure that the applicant's
3 ten attributes meet the GALL attributes.
4 It was, as you state, in the application
5 they said these two fire protection programs were
6 consistent with GALL.
7 MR. LEITCH: Right.
8 MR. ARRIGHI: When we went on site and
9 looked at the basis document, those issues that you
10 brought up were clearly stated in the applicant's
11 basis document that they had exceptions for these
12 specific attributes. And I believe it was, I guess,
13 an oversight on the applicant's part. I don't know
14 if these programs were developed after the submittal
15 of the application, but they didn't -- once they
16 identified these exceptions, due to an oversight or
17 whatnot on their part, they didn't inform the staff
18 of those exceptions. So during the aging management
19 program audit we identified them. Again, they jumped
20 out off the page. And we issued a RAI request of
21 information to the applicant. And they forwarded
22 those responses to the staff. And they were
23 subsequently reviewed and approved.
24 But, again, the applicant was aware of
25 those exceptions. But, again, you'd have to put the

1 SM why it wasn't forwarded.

2 MR. LEITCH: Okay. Well, the inspection

3 report seems to indicate that in some cases these

4 exceptions have been identified, but in other cases

5 they weren't identified.

6 MR. ARRIGHI: Yes. There were eight

7 exceptions. Six or seven of those exceptions were

8 clearly called out in their basis document. There

9 was one, I can't recall which specific one it was, a

10 frequency test of 6 months versus 2 years; I can't

11 recall off the top of my head which exception wasn't

12 clearly called it.

13 MR. LEITCH: I think there was one

14 related to the qualification of personnel doing--

15 MR. ARRIGHI: It may be the one that the

16 staff identified on their own. And, again, the

17 applicant included that as an exception and put that

18 response on the docket. And that exception was

19 reviewed by the staff.

20 MR. LEITCH: So these frequencies were

21 then brought into compliance with GALL or they stand

22 as exceptions?

23 MR. ARRIGHI: They stand as exceptions

24 and the staff reviewed those exceptions. And based

25 on surveillance test or results, the staff approved

1 those exceptions based operating history and
2 whatnot. I'd have to go to --
3 MR. LEITCH: I guess my question is that
4 perhaps one or two of these exceptions may be
5 understandable, but it seems to me that there's so
6 many exceptions all related to the frequency of
7 doing certain testing with respect to fire
8 protection equipment, which is real important stuff.
9 I mean, I just wonder why there are so many
10 exceptions in this one particular area?
11 MR. WROBEL: George Wrobel.
12 We refined the program basis document
13 quite a bit, and we had a lot more extensive review
14 of the docket when we submitted the application.
15 Subsequent to that, we did a lot more analysis and
16 evaluation of the attributes.
17 We have a plant specific design analysis
18 that was done was specifically for the exceptions
19 that were taken there. And so those particular
20 exceptions were justified based on the information
21 that was plant specific. We're doing all of the
22 testing and surveillances that are requested by the
23 GALL, but aren't the specificity of the -- you know,
24 the timing is different, but we have a plant
25 specific design analysis that justified that.

1 So some of that was just caught as we
2 were going through a more detailed review developing
3 our program basis document that we had when we did
4 the application. And we didn't supplement our
5 application when we found those, because we knew
6 there audits coming and they would be developed at
7 that point.
8 So, there's no open items and there's no
9 inconsistencies. I mean, they're different, but
10 they're not bad for us.
11 MR. LEITCH: Yes. But I guess all the
12 frequencies that -- I mean, there are a number of
13 things where the frequencies are just less than that
14 prescribed in GALL.
15 MR. FRUMKIN: This is Dan Frumkin from
16 the staff.
17 I think what we found in reviewing
18 these, for example, the fire doors and the Halon
19 system frequencies, is the frequencies for aging
20 management does not need to be nearly as strict as
21 the frequencies for the wear and tear on the active
22 component wear and tear.
23 So a fire door might be inspected every
24 week or every day that they might walk through a
25 fire door. But to go look at the door for aging

1 features like aging degradation, that could be done
2 on a less frequent basis.
3 So as far as operability, those things
4 are being analyzed and are going to be done on a
5 fairly code compliant basis, whereas aging
6 management type inspections, which can be much more
7 intense, are going to be done on less frequent
8 basis.
9 MR. LEITCH: Okay. That's good. That
10 answer make sense to me, although it perhaps raises
11 the question about there's nothing really different
12 about Ginna. Perhaps the GALL is overly restrictive
13 in what it's suggesting as far as aging management
14 frequency.
15 MR. WILSON: This is Dave Wilson,
16 Rochester Gas & Electric.
17 One of the things we found in both fire
18 protection and service water systems that comes into
19 play here is the water chemistry of the water source
20 lead for our fire water system. It's either city
21 water or its Lake Ontario water. And Lake Ontario
22 water's got a pH of 7 and very low chemical content.
23 And that actually does come into play when you look
24 at how you system degrades.
25 And so a plant that might use a

1 different type of water or have different water
2 chemistry for their water source would have, by
3 necessity perhaps, a different frequency of
4 inspections.
5 So for our facility being fed from Lake
6 Ontario or having treated water, one of the two,
7 we're able to have lots and lots of operating
8 experience that shows how often we need to go in to
9 flush or whatever process we need to do. And it may
10 be different for every facility.
11 Not that I want to defend the GALL.
12 MR. LEITCH: Okay. Thank you.
13 MR. FORD: I have a question for you,
14 Michael. You said a curious phrase. You said that
15 the aging management programs were conceived and
16 they're full in philosophical sense, I think it is.
17 MR. MODES: Yes.
18 MR. FORD: But the intimation, the
19 reduction to practice wasn't what it should be. IS
20 what you meant?
21 MR. MODES: No. When you do the
22 inspections from the viewpoint of if you will, where
23 the rubber actually meets the road versus the
24 esoteric reviewing a license application, what you
25 find out is many times the timing of the inspection

1 to support the NRR review process does not, in fact,
2 arrive at a period of time when the programs have
3 been fully revised or fully implemented. So
4 although they may in the application identify a
5 certain program, when you get down to the procedure
6 level you find out that certain nuances haven't been
7 included. That's what I meant; the difference
8 between a philosophical approach and -- I'm speaking
9 from a very pragmatic viewpoint.
10 MR. FORD: Yes. So this question the
11 details --
12 MR. MODES: Yes. Right.
13 MR. FORD: -- as you say, it's precisely
14 those details that I'm questioning. For instance,
15 on the one time inspection and many others. It's
16 the details that I'm concerned about. And are you
17 saying that from your view they haven't yet reached
18 those level of details?
19 MR. MODES: No. I'm saying in a number
20 of cases that's what we identified.
21 MR. FORD: Okay.
22 MR. MODES: Or to put it another way,
23 the things that we did identify were the nuances.
24 It's supposed to be a positive comment, not a
25 negative one.

1 MR. FORD: Okay. Thank you.

2 MR. MODES: And the last slide, what did

3 you call that "a meadow?" I don't know if I like

4 that. Being from the region and working so

5 arduously on that set of green indicators. But,

6 yes, it is a meadow.

7 DR. WALLIS: Well, there are unexpected

8 things to be found in meadows.

9 MR. FORD: It looks more like a lawn to

10 me. A meadow has flowers in it.

11 MR. MODES: Although I will quote him.

12 MR. ARRIGHI: All right. Moving on.

13 MR. LEITCH: Just another question for

14 Mike regarding plant security, the inspection report

15 states the plant security is not within the scope of

16 license renewal, yet I think we have seen certain

17 elements of plant security, particularly those

18 elements necessary to support emergency planning

19 activities in the scope of other license renewal

20 applications.

21 MR. MODES: Well, there were some

22 components. I believe the whole security -- I don't

23 remember how the break is. If you could help me

24 here, Dave. I did assign one of the inspectors the

25 task of looking at the security system. And I don't

1 recall if it was because that part of the system was
2 out of scope or in scope, but we did review it and
3 it was appropriate.
4 MR. LEITCH: Yes. Okay. I wasn't
5 thinking so much about this security system, per se.
6 MR. MODES: It's not that it's in the
7 GALL.
8 MR. LEITCH: As perhaps the building.
9 MR. MODES: Right.
10 MR. LEITCH: And the ventilation system
11 is okay with the building, and things of that nature
12 where you need to maintain that functional.
13 MR. MODES: And the parts, for example--
14 MR. LEITCH: For example, the planning
15 sense, not necessarily the --
16 MR. MODES: The UPS, the uninterruptable
17 power source to the security computer system,
18 etcetera?
19 MR. LEITCH: Right.
20 MR. MODES: That was all looked at.
21 MR. LEITCH: Okay.
22 MR. MODES: Yes. It's not like we
23 didn't look at it.
24 MR. LEITCH: Okay. Thank you.
25 MR. MODES: Yes.

1 MR. ARRIGHI: Okay. Moving on to
2 Section 3, the aging management review of a GALL
3 divides a system, the system into six groups.
4 Aging management programs. There are a
5 total of 33 aging management programs and 30 were
6 consistent with some deviation, and three were non
7 GALL AMPs. Again, in the application enhancements
8 means that those that augment the GALL and
9 deviations are those that do not agree with GALL.
10 And again, we had AMP, one aging
11 management program was added. And in this section
12 of aging management programs, there were two open
13 items and one of those is currently resolved.
14 You brought up the June inspection or
15 audit here. This is the staff's aging management
16 program audit. Again, the purpose of the audit was
17 to verify consistency with GALL. The bottom line
18 was that the staff concluded that AMPs were
19 consistent with GALL except with those two
20 exceptions on the fire protection program and the
21 fire water systems programs. And we discussed those
22 a little earlier.
23 In the reactor system, Section 3.1,
24 systems are broken down into --
25 MR. LEITCH: I just noticed that the

1 fire protection requirements had originally been
2 specified in the technical specifications. And then
3 I think they were moved to the FSAR?
4 MR. ARRIGHI: Or the Technical
5 Requirements Manual.
6 MR. LEITCH: And now they're in the
7 Technical Requirements Manual. Do you see any
8 connection, I mean between -- I don't know of the
9 Technical Requirements Manual is less rigorous from
10 the licensee's viewpoint in the tech specs, but I
11 mean does that suggest, perhaps, why some of these
12 differences in frequencies and so forth crept into
13 the fire protection program?
14 MR. ARRIGHI: In my experience as an
15 inspector in my past life, I would say no. Even if
16 the systems in tech specs are not in tech specs, you
17 know my experiences that the applicant, you know,
18 implements those requirements. You know, I think by
19 putting them in the Techs Requirement Manual they
20 can make changes easier than getting a tech spec
21 amendment. But from my experience, I wouldn't
22 attribute it to that.
23 I don't know if you have a --
24 MR. WILSON: This is Dave Wilson, Ginna
25 Station.

1 In fact, the equipment that's in the
2 scope in our application for fire protection, it's
3 greater than the sum of the equipment described in
4 our Technical Requirements Manual or UFSAR. And the
5 reasoning behind that is pretty straight forward.
6 The staff had a lot of early issues that resulted in
7 an ISG which had to do with the identification of
8 equipment required for 10 CFR 50.48, I think it is,
9 fire protection rule, and Appendix R. And the staff
10 had, you know in my opinion or our opinion, a pretty
11 reasonable position on some utilities having a
12 complex and hard to understand licensing basis. I
13 believe the early applicants had just Appendix R
14 equipment in scope for the rule, and later on went
15 back and adjusted.
16 We did not fall into that trap. When we
17 scoped our fire protection system, we laid out our
18 entire licensing basis, you know, original
19 construction up through Appendix R and today, and
20 put all of that equipment in scope, regardless of
21 whether or not it was TRM. Where we differentiated
22 was, you know, it's clear in the application that
23 certain fire protection features are included for
24 insurance purposes in out buildings and things like
25 that. So that did not come into play in these fire

1 protection questions.

2 I am a little bit you know not taken

3 back but concerned, I guess, if we're leaving you

4 with an impression of the utility that we're not

5 managing our fire protection system. I think what

6 we're seeing here is more growing pains in the GALL

7 and the Standard Review Plant format than any

8 technical issues.

9 We put a lot of stuff into scope. And,

10 you know, the really argument that we have really

11 with the staff is over the jockey pump, which costs

12 $274.

13 MR. LEITCH: Okay. Thank you.

14 CHAIRMAN BONACA: I have a question

15 before we move on. I asked the question before

16 regarding the battle former bolts, you know, they

17 replaced 56 out of 728. And that's because they

18 found defect-like. And what I found is that they

19 have committed no further inspections to be

20 performed. And I was asking the question of why

21 would it be a logic that says you know, you don't

22 need to inspect them anymore. Any comment on how

23 you accepted? This is not an open item, I

24 understand.

25 MR. ARRIGHI: Barry Elliot.

1 CHAIRMAN BONACA: Yes. This is the
2 baffle former bolts where they in 1999 after 30
3 years of operation they found a number of them were
4 defective. They replaced them. There were 56 out
5 of 700 plus.
6 MR. ELLIOT: I'd say our position on the
7 baffle bolts were --
8 CHAIRMAN BONACA: I would like to
9 understand what your views of, you know, the fact
10 that they don't need to inspect anymore this baffle
11 former bolts.
12 MR. ELLIOT: Okay. We don't agree with
13 that entirely, that they don't have to inspect.
14 Our position on the baffle former bolts
15 is that they're part of the reactor vessel internals
16 program.
17 CHAIRMAN BONACA: Right.
18 MR. ELLIOT: And the industry through
19 the MRP is developing data on baffle former bolts,
20 aging effects like irradiation assisted stress
21 corrosion cracking, fracture toughness. And from
22 this data they are going to propose a program for
23 industry.
24 As far as this particular application is
25 concerned, they have committed to implement the MRP,

1 whatever that program is. Our concern is that this
2 application, this particular applicant is going to
3 go into license renewal in 2009 and that the MRP
4 program may not be completed by then. So we've asked
5 them to commit that prior to entering the license
6 renewal program, that they will have either the MRP
7 program or submit one of their own for all the
8 internals. And that's our position; that there
9 needs to be part of the license renewal term an
10 internals inspections program. And, of course,
11 baffle former bolts would be part of that.
12 CHAIRMAN BONACA: And they have agreed
13 to that? They have agreed to that?
14 MR. ELLIOT: Yes, they have.
15 CHAIRMAN BONACA: Okay.
16 MR. ELLIOT: Well, they could talk for
17 themselves.
18 MR. WROBEL: Yes. George Wrobel from
19 RG&E.
20 We agreed that we would submit an
21 internals inspection program prior to the period of
22 extended operation. We haven't decided exactly what
23 we're going to do on baffle former bolts. We're one
24 of the four plants in the country that have looked.
25 No one else has even looked yet. And we found so

1 little degradation, and we feel that there's so much
2 margin that at this point we're not ready to commit
3 to actually doing more detailed inspections of the
4 bolts. But, you know, that could change. Right now
5 we don't see the need for it. And I'm not sure what
6 the schedule for MRP is on that.
7 I'll pass that along.
8 MR. ELLIOT: I'll pass that along.
9 I want to give you some information. We
10 had a meeting with the MRP within, I don't know, a
11 week or two ago. And I told them that you needed
12 this stuff by 2009. And I think you better get on
13 them, because they were under the impression the
14 lead plant was Oconee. And they could use Oconee as
15 a lead plant. But I think you come before Oconee as
16 far as needing this program.
17 So, I think you need to talk to them.
18 CHAIRMAN BONACA: Well, I hear two
19 things here. I hear that they need to do this, and I
20 hear you saying that you're not committing to
21 anything particular? Are you committing to a list,
22 say with MRP, and follow industry insights and
23 recommendations?
24 MR. WROBEL: We do that as a matter of
25 course, so we'll continue following MRP and what's

1 going on.

2 The internals commitments that we made

3 were a little bit different then that. We did commit

4 that we would look. Before 2009 that we would have

5 a program that could detect cracking .0005 mil or

6 something like that. That's a program that we're

7 more actively pursuing, because we haven't done that

8 one before.

9 CHAIRMAN BONACA: Okay.

10 MR. WILSON: And we're following what

11 the boilers are doing in that area. The baffle

12 bolts, like we say, we had one percent degradation

13 so it seems to be a lower priority. But we will

14 continue working with MRP and if they develop an

15 industry position, then we'll be evaluating that.

16 CHAIRMAN BONACA: Why did you replace

17 those 56 bolts if you didn't find there was a

18 problem with those?

19 MR. GEIKEN: This is Gerry Geiken.

20 Actually, I'd like to clarify one thing.

21 We found one bolt, out of all of those bolts that we

22 inspected, that exhibited evidence of ISACC.

23 CHAIRMAN BONACA: Okay.

24 MR. GEIKEN: All the other indications,

25 UT indications were false/positives. We extracted a

1 number of bolts and tested them to distraction of
2 the Westinghouse hot cell. We couldn't verify one
3 indication.
4 So we really saw very, very little
5 evidence of IASCC.
6 The other thing is, we did a proactive
7 replacement. Those 56 we decided to proactively
8 simply extract and replace with 316.
9 CHAIRMAN BONACA: Hopefully, by the time
10 we get to the final Committee meeting, there will be
11 some particular understanding of how this is going
12 to be handled. I think I understand it. But, you
13 know, if you have expectations, there has to be
14 responding willingness to meet the expectation.
15 So, okay.
16 MR. GILLESPIE: Hey, Russ. Frank
17 Gillespie.
18 What is the expectation today? Because
19 it's not zero.
20 CHAIRMAN BONACA: I'm asking, you know,
21 you have stated an expectation that 2009 there will
22 be in fact a clear commitment of what they're going
23 to do.
24 MR. ELLIOT: No. The commitment is now.
25 CHAIRMAN BONACA: Yes.

1 MR. ELLIOT: But prior to 2009 they have
2 to have given us a program for the reactive vessel
3 internals for inspection for what they think needs
4 to be inspected, the frequency of inspection, the
5 acceptance criteria; all of their requirements for
6 an inspection program has to be submitted and
7 approved by us by 2009.
8 CHAIRMAN BONACA: And that will have to
9 include the baffle --
10 MR. ELLIOT: And the baffle bolts will
11 be part of that program.
12 CHAIRMAN BONACA: Now, they may still
13 convince you by that time that they don't need to
14 inspect those baffle bolts. Can they convince you
15 of that?
16 MR. ELLIOT: Have they convinced us that
17 they don't have to inspect them?
18 CHAIRMAN BONACA: Can they convince you
19 by the time they submit the program?
20 MR. ELLIOT: Well, see, the MRP is
21 looking at the bolts.
22 CHAIRMAN BONACA: All right.
23 MR. ELLIOT: And I think if I was them,
24 I would look and say certain amount of radiation
25 causes a certain amount of degradation, and then I'd

1 just look at my core and say, okay, how many of
2 those do I have to look at before -- you know, and
3 that's it. And then you would say I would inspect
4 so often to assure that it doesn't degrade.
5 CHAIRMAN BONACA: Okay.
6 MR. ELLIOT: And that's what I'm hoping
7 the MRP is going to come up with. Right now they're
8 just generating the data about what it takes to get
9 irradiation assisted stress corrosion cracking of
10 baffle former bolts.
11 CHAIRMAN BONACA: Yes, I understand.
12 MR. ELLIOT: So we don't have that data
13 yet.
14 CHAIRMAN BONACA: Have more data that
15 aspire of this MRP program, they will come up
16 recommendations on what need to be inspected and how
17 frequently?
18 MR. ELLIOT: Yes.
19 CHAIRMAN BONACA: Okay. Now their
20 recommendation may not include a recommendation for
21 inspection of baffle former bolts, right?
22 MR. ELLIOT: It might not. That's
23 right.
24 CHAIRMAN BONACA: Might not, and you
25 would leave that?

1 MR. ELLIOT: Right, and we'll review it.
2 CHAIRMAN BONACA: And I think you both
3 agree on this issue. So I don't see disagreement of
4 that. No, I'm trying to understand it.
5 MR. ELLIOT: That's good. Because I hear
6 --
7 CHAIRMAN BONACA: I hear this
8 professional side, and I'm waiting to hear some
9 other things from the other side.
10 MR. GILLESPIE: So right now they're
11 committed to following the MRP when the MRP results
12 come out. And if the MRP don't come out by 2009,
13 they're committed to submitting a plan for NRC
14 approval?
15 MR. ARRIGHI: Yes.
16 MR. GILLESPIE: Is that a condition of
17 the license?
18 MR. ARRIGHI: That's a commitment. It
19 is a commitment at this time.
20 MR. GILLESPIE: Okay. And there's a
21 commitment that they'll submit it. That's not
22 review and approval. So what we have --
23 MR. ARRIGHI: Pretty straight. No, it
24 was a commitment to review and approval.
25 MR. GILLESPIE: Okay. So that that

1 limit is on there.

2 Mario, because we're not going to know

3 any more technically between now and the full

4 Committee meeting.

5 CHAIRMAN BONACA: That's right.

6 MR. GILLESPIE: So what we've got is a

7 process in place that the licensee is going to

8 submit for approval a plan prior to 2009 or MRP,

9 whichever comes first.

10 CHAIRMAN BONACA: Well, it took me this

11 long to understand --

12 MR. GILLESPIE: And --

13 CHAIRMAN BONACA: Now I understand it,

14 and I think we can go to the full Committee meeting

15 with that.

16 MR. ARRIGHI: Okay. All right. I'll

17 move forward.

18 Again, Section 3.1, reactor systems.

19 There were two open items. One was resolved.

20 Item B2.1.28-1 had to do with the

21 reactor vessel surveillance program. This item

22 involved testing of the surveillance capsule in the

23 core after it received a neutron fluence of 60

24 years. Initially the applicant wasn't planning on

25 testing the capsule. Again, this was not consistent

1 with GALL. The applicant subsequently came back and
2 agreed that they will test the capsule once it
3 reaches a fluence for 60 years.
4 The open item B2.1.36-1 thimble tube
5 inspection program. GALL doesn't have a
6 corresponding program and this was reviewed the
7 Standard Review Plan. Several of the attributes, I
8 think five of the eight attributes the staff needed
9 further clarification and information to approve
10 this program.
11 The applicant has subsequently provided
12 the information. Again, preliminary information
13 looks like the information is okay, however it's
14 still under staff review. So this item is not
15 resolved, but we're evaluating the information they
16 provided.
17 MR. FORD: Now that information included
18 things such as the qualification of inspection
19 techniques for cracking and things of this nature?
20 MR. ARRIGHI: Barry Elliot.
21 MR. ELLIOT: This is Barry Elliot.
22 I'm just going to give you a whole
23 picture of the thimble tube programs.
24 There's two parts of the thimble tube.
25 There's a thimble tube and the guide tube. The

1 original thimble tube inspection program was for
2 flow induced vibration. And when the applicant made
3 the evaluation of the thimble tube and the guide
4 tube, they also identified that cracking was an
5 aging effect for both the thimble tube and the guide
6 tube because they're stainless steel and they're in
7 a PWR environment water.
8 The problem is they didn't have an
9 inspection program for cracking. So we asked them
10 to provide the ten attributes that we have in our
11 review plan for programs and to identify how the
12 existing thimble tube inspection program would
13 satisfy for cracking. The existing one was for flow
14 induced in vibration.
15 They modified the thimble tube
16 inspection program to use eddy current inspection,
17 use the same eddy current but look for cracking,
18 qualify it to their experience with inspection by
19 eddy current, their eddy current in the plant. And
20 the acceptance criteria, since you can't really
21 detect the depth using eddy current, any defect
22 would be considered to be unacceptable and they
23 would do whatever was necessary.
24 Now, they do not do a eddy current
25 inspection of the guide tube. So what they're doing

1 is for the thimble tube -- for the guide tube is the
2 thimble tube will be a precursor for the guide tube
3 because it's inside the thimble tube. It's
4 surrounded by reactor coolant water and is just the
5 same temperature as the inside of the guide tube. So
6 that would be a precursor.
7 The small problem we had with that is
8 that there is a weld on the outside of the guide
9 tube between the penetration and the guide tube. And
10 there's no any current would inspect that.
11 So they agreed to do so far is to do the
12 VT-1 examination of that location at the same time
13 they do the bottom head location. And the VT-1
14 would be looking for cracks. Normally this location
15 wouldn't even be in the ISI program. So this would
16 be an enhancement of the ISI program.
17 And as far as the VT-1, the ASME code
18 specified the qualification that is necessary to
19 ensure that you detect cracks using the VT-1.
20 And right now we're going through that.
21 We haven't finished the review of it, but that's
22 basically where they are right now.
23 MR. FORD: Now in the SER it talks about
24 eddy current also. Is that no longer a monitoring
25 technique or to be used for this particular

1 degradation?

2 MR. ELLIOT: Excuse me? What.

3 MR. FORD: In the SER you talk about

4 eddy current.

5 MR. ELLIOT: Yes. Eddy current is going

6 to be used on the thimble tube and the inspection of

7 the thimble tube will be for cracking and flow

8 induced vibration. And if any cracking is observed

9 on any thimble tube, it will be replaced, the

10 thimble tube. But also that would mean that the

11 guide tube that is surrounding it would also become

12 within inspection, and they would have to develop

13 some kind of inspection for the guide tube at that

14 time.

15 MR. FORD: Okay.

16 MR. ARRIGHI: Alloy 600. Again, the

17 reactive vessel head, the control rod drive

18 mechanisms and the penetrations were placed on the

19 past refueling outage with Alloy 690 thermally

20 treated penetration. The Alloy 600 components in the

21 vessel include the bottom mounted instrument

22 penetrations and the radial core support pads.

23 Barry mentioned earlier the reactive

24 vessel internal programs. This slide is just to

25 indicate that they have committed to submit this

1 program for review and approval to the staff prior
2 to a period of extended operation.
3 Section 3.2, 3.3 and 3.4, those three
4 systems resulted in one confirmatory items, and this
5 was in the auxiliary system regarding the need to
6 make a tech spec change to incorporate particular
7 testing requirements for the diesel fuel oil.
8 MR. FORD: Now, on this particular one,
9 they've confirmed that they were looking for
10 particulates in the fuel oil, is that correct?
11 MR. ARRIGHI: I want to ask --
12 MR. FORD: And they're looking for
13 exception on biocides and corrosion inhibitors.
14 MR. ARRIGHI: Krzystof?
15 MR. PARCZEWSKI: I didn't hear the
16 question.
17 MR. FORD: On this confirmatory item.
18 MR. PARCZEWSKI: Yes?
19 MR. FORD: On the confirmatory item
20 associated with the fuel oil, there's a tech spec.
21 My understanding is that they are confirming that
22 they will monitor for particulates, but they will
23 not asking for an exemption on the goal requirement
24 that you will have biocides and corrosion
25 inhibitors. I think that's essentially the essence

1 of this particular AMP.

2 Could you give us an idea of, first of

3 all, factually why did you agree with their

4 statement that they do not need biocides and

5 corrosion inhibitors? I just want your thought

6 process.

7 MR. PARCZEWSKI: Well, I really don't --

8 I'm sorry. Repeat the question. I did not

9 understand it.

10 MR. FORD: Well, maybe also the

11 applicant can tell me if I'm stating it incorrectly.

12 On this issue about the corrosion of the

13 internals of the diesel fuel oil tanks.

14 MR. PARCZEWSKI: Yes.

15 MR. FORD: They ask for an exemption

16 from GALL in that they would not be using biocides

17 or corrosion inhibitors. But they confirm that they

18 would look for particulates.

19 Now my question here is, just for my

20 information --

21 MR. PARCZEWSKI: Yes.

22 MR. FORD: -- what was your thought

23 process in terms of factual data to back up their

24 exemption request that they do not content biocides

25 and corrosion inhibitors?

1 MR. PARCZEWSKI: They didn't have any
2 MIC during their operation. So they felt they
3 probably don't need to biocide, because the
4 microbiological degradation during this operation
5 period. So I felt that they're justified not to
6 have a biocide.
7 MR. FORD: And corrosion inhibitor,
8 presumably that's because of the tech spec requiring
9 some control of the water content of the --
10 MR. PARCZEWSKI: Again, this is similar,
11 you know. They didn't have any significant
12 degradation due to corrosion. Therefore, I felt that
13 since they have this operational experience.
14 MR. FORD: Okay.
15 MR. PARCZEWSKI: I felt that we can
16 accept their request for not including that in their
17 program.
18 MR. FORD: It just makes me feel
19 uncomfortable a little bit that we are blindly
20 looking to the future, as you as you said Mario,
21 looking into the future and making judgments based
22 on what you see today, especially for nonlinear
23 degradation processes, time dependent processes.
24 MR. PARCZEWSKI: Yes.
25 MR. FORD: But thank you for your

1 answer.

2 MR. PARCZEWSKI: Yes.

3 MR. FORD: It doesn't make me feel good.

4 MR. WILSON: This is David Wilson from

5 Rochester Gas & Electric.

6 I just can chime in that as an

7 applicant, as a licensee we're not opposed to

8 modifying aging management programs when they make

9 sense. But it's important to note that adding

10 biocides and additives to your fuel oil also have

11 unintended consequences, just like not adding them.

12 MR. FORD: That's true.

13 MR. WILSON: So if you look in the

14 aggregate over the industry, which we've done, and

15 you say well what's the right thing to do at this

16 instant? Well, the right thing to do is continue on

17 with what's been successful, that's operating

18 experience, trust but verify and keep looking.

19 MR. FORD: I accept that entirely. We

20 are pragmatic. You've got to be pragmatic about all

21 these things. That's the answer I would have liked

22 to have heard. I've been asking these questions for

23 quite some time now and that is, if you like, the

24 correct answer. But I want some rational, technical

25 rational.

1 MR. GEIKEN: Yes. This is Gerry Geiken.
2 We did actually investigate fairly
3 extensively those utilities which do add biocides
4 and corrosion inhibitors.
5 MR. FORD: Right.
6 MR. GEIKEN: And looked at their
7 geographical distribution in the United States, and
8 we found that they're mostly in the south. And
9 those nuclear power plants that are in the northern
10 climes with cooler weather have not, typically, been
11 required or found it necessary to make those
12 additives.
13 And the other part of that whole issue
14 is, just as Dave said, we've seen that there are
15 some other negative consequences for making these
16 additives.
17 So in the sum total of our
18 investigation, the research, we thought the best
19 course to take is the course we're on.
20 MR. FORD: I'm happy that there's a
21 quantity to judgment being made rather than we
22 haven't seen a problem so far. Good.
23 Thank you.
24 MR. ARRIGHI: In Section 3.5,
25 containment structures and components. There were

1 no open or confirmatory items identified in this
2 section.
3 Aging management of in-scope
4 inaccessible concrete. You can see from the chart
5 here, ground water samples indicate that the below
6 grade environment is non-aggressive at Ginna.
7 Therefore, a plant specific program is not required
8 by GALL.
9 The applicant will inspect areas when
10 excavations allow and when aging effects on
11 accessible portions indicate detrimental effects are
12 occurring.
13 CHAIRMAN BONACA: Yes. I think they're
14 doing the right thing of using opportunistic
15 inspections.
16 What surprises me, of course, they have
17 true non-aggressive environment. What surprises me
18 is that we have the same requirement, essentially
19 the opportunistic inspection also for very
20 aggressive sites.
21 MR. ARRIGHI: Yes.
22 CHAIRMAN BONACA: That maybe it's a
23 problem. I mean, we discuss this issue.
24 MR. MUNSON: Cliff Munson, civil
25 engineering.

1 For aggressive sites we do more, require
2 more than -- and Ginna is not an aggressive site, as
3 we have established.
4 CHAIRMAN BONACA: Right.
5 MR. MUNSON: But we require that they
6 enhance their aging management programs for
7 aggressive sites. And I don't know if we want to
8 get into that now.
9 CHAIRMAN BONACA: No, no. It's true
10 that you have more inspections or at least inferring
11 potential degradation from accessible locations.
12 That's true. Okay.
13 MR. ARRIGHI: And the last section in
14 aging management review Section 3, there was one
15 open item and one confirmatory item in this area.
16 The open item has been resolved and it had to do
17 with thermal relaxation of the bus duct bolt
18 connections. And the applicant has committed to
19 perform those in sections. So that item is
20 resolved.
21 And, again, there was one aging
22 management program added as a result of staff
23 questions.
24 That concludes my presentation on --
25 MR. FORD: I have a question on this

1 one, too.

2 In the SER it states for this particular

3 item, 3.6.1, which was the first item, I believe, it

4 says that there's reasonable assurance that in this

5 case the insulting materials and antioxidants will

6 be sufficient to not give degradation. How do you

7 agree with the phrase "reasonable assurance?"

8 What's your metric?

9 MR. ARRIGHI: I'm going to have Jim

10 Lazevnick, the reviewer --

11 MR. FORD: It also appears in other

12 areas in this SER, the words "reasonable assurance."

13 MR. LAZEVNICK: This is Jim Lazevnick.

14 I'm the electrical reviewer from the electrical

15 branch.

16 Yes, I think your statement is with

17 regard to the bus duct insulation.

18 MR. FORD: Yes.

19 MR. LAZEVNICK: Internal bus duct

20 electrical insulation.

21 MR. FORD: Yes.

22 MR. LAZEVNICK: They committed to do a

23 visual inspection of the bus duct. Essentially

24 consistent with other visual inspections we've

25 approved for things cable insulation, degradation,

1 etcetera.

2 There's an industry aging management

3 guide that deals with that and deals with the

4 inspections. And it's on the basis that operating

5 experience and the industry work that was done on

6 license renewal has determined that in effect these

7 inspections will provide reasonable assurance.

8 MR. FORD: Speaking just as an informed

9 member of the public and not as an expert in this

10 particular area, I think it might help in the SER,

11 because I assume it's an open document, that that

12 rational is stated. Well, and just looking on

13 reasonable assurance as the reason for your

14 approving. Purely perception.

15 MR. LAZEVNICK: Okay.

16 MR. FORD: Thank you.

17 DR. LEE: Russ, just a reminder. Earlier

18 ACRS has a question about station blackout. Okay.

19 So since Jim is here, can you put up the station

20 blackout drawing?

21 MR. ARRIGHI: This is the applicant's

22 diagram of the electrical components in the

23 application.

24 The evaluation boundary begins at the

25 first isolation device that's in the -- which is

1 right here. This green portion is the off-site power
2 system subject to aging management review. But just
3 upstream of the disconnect switch here and the other
4 train, is in scope of license renewal.
5 And the blue portion is a 4160 portion
6 to the safety buses.
7 So for station blackout, again, the
8 boundary is at the isolation devices.
9 I don't know what specific questions you
10 may have that myself or a reviewer could answer.
11 If there are none --
12 MR. ROSEN: What page are you on?
13 MR. ARRIGHI: Oh, this was just a
14 handout.
15 MR. FORD: Yes, it was in the very
16 beginning, I think.
17 MR. ARRIGHI: The licensee had a
18 diagram, but due to time --
19 CHAIRMAN BONACA: They had an open item
20 on --
21 MR. ROSEN: Well, I don't have it.
22 MR. ARRIGHI: Yes. The open item we had
23 had to deal with this --
24 CHAIRMAN BONACA: The cables.
25 MR. ARRIGHI: -- cabling to the safety

1 bus. This was the bus that ties on the service
2 water bus. Again, the cabling for the normal ESF
3 component, safety components is in scope. And, of
4 course, in the diesel you can power that bus and the
5 diesels. But what we had in the open item was that-
6 - that cabling.
7 CHAIRMAN BONACA: And now they're
8 included?
9 MR. ARRIGHI: And that is not included.
10 And, again, we're reviewing the response from the
11 applicant to see if that's adequate.
12 CHAIRMAN BONACA: Okay. The concern is
13 that you have is that you cannot go to cold shutdown
14 without the --
15 MR. ARRIGHI: Yes, what was in that
16 knowledge, the cold shutdown without the service
17 water pump, correct.
18 CHAIRMAN BONACA: Okay.
19 MR. ARRIGHI: How long they could stay
20 in that condition.
21 CHAIRMAN BONACA: All right. And it is
22 still an open item. Okay.
23 MR. ARRIGHI: I do have a slide of that.
24 I don't know if you want it for -- yes, the
25 applicant had it in their handout.

1 MR. ROSEN: It's very hard to see in
2 their handout. It's just blurry and fades away. You
3 have a better slide then this, you say?
4 MR. ARRIGHI: No. Mine is probably the
5 same thing as the applicant had. We had a big
6 drawing that we had to reduce.
7 CHAIRMAN BONACA: The applicant has only
8 the upper portion of that slide. Here it is. It's
9 the upper portion.
10 MR. ARRIGHI: And mine is probably a
11 reduction of the larger document. I'll give this to
12 you to see if it's any better.
13 MR. ROSEN: This is substantially
14 better, actually.
15 CHAIRMAN BONACA: Yes.
16 MR. ARRIGHI: If there's no further
17 questions, and if you want to come back to this
18 later, we will. If there's no further questions, I'd
19 like to turn it over to John Rowley to discuss the
20 time limiting aging analyses.
21 CHAIRMAN BONACA: Okay.
22 MR. ROWLEY: Good afternoon.
23 Section 4 dealt with time limited aging
24 analyses, also know as TLAAs.
25 The applicant indicated that six TLAAs

1 were in accordance with criteria specified in 10 CFR
2 54.3. They include reactor vessel neutron
3 embrittlement, metal fatigue, environmental
4 qualification of electrical equipment, concrete
5 containment of tendon pressures, containment liner
6 plate and penetration fatigue and other plant
7 specific TLAAs.
8 Section 4.2 was reactor vessel neutron
9 embrittlement. The analysis affected by irradiation
10 embrittlement identified as TLAAS. They were
11 reactor vessel upper-shelf energy, pressurized
12 thermal shock and PT curves.
13 Appendix G CRF 50 requires that the
14 reactor beltline materials have sharp USE values
15 throughout the life of the vessel less than 50 foot
16 pounds.
17 As you see in the chart, screening
18 criteria is 50, but Ginna's project to be less than
19 50. A foot value less than 50 is acceptable if it
20 is determined that lower values of the USE provide
21 marginal safety against fracture required ASME Code
22 Appendix G.
23 DR. WALLIS: Could you remind us how
24 much less than 50?
25 MR. ROWLEY: Well, it's projected to be

1 less than 50 during that period of extended
2 operation. As of right now it's now.
3 DR. WALLIS: This is calculated?
4 MR. ROWLEY: Yes.
5 DR. WALLIS: Well, what's the calculated
6 figure?
7 MR. ROSEN: What's the number?
8 MR. ELLIOT: This is Barry Elliot.
9 I don't know the actual number, but the
10 calculation method is Reg Guide 1.99 Rev. 2. I
11 don't know what number you get, but the number is
12 not what's important. What's important is once you
13 go below that, that you do the analyses.
14 Now, the analyses is a fracture
15 fractures mechanics evaluation, elastic/plastic
16 fracture mechanics evaluation. And that material
17 properties for that is a J-value of fracture
18 toughness. And that is dependent upon the cooper and
19 the fluence. And that material property is what
20 goes into the evaluation. It isn't the upper shelf
21 energy. It's the fluence and the cooper that goes
22 into the material property.
23 MR. ROSEN: We complimented the staff
24 last time, I think it was on the Robinson review,
25 when you gave this chart with the number.

1 MR. ELLIOT: We gave you a number of
2 how--
3 MR. ROSEN: And you said that answers
4 all the questions.
5 MR. ELLIOT: Okay.
6 MR. ROSEN: And now what you've done is
7 left them all on the table again.
8 MR. ELLIOT: Well, our answer today is
9 that there is a J-value that is function of cooper
10 in fluence --
11 MR. ROSEN: Don't go through it again,
12 Barry. We know --
13 MR. ELLIOT: And that's what's
14 important.
15 MR. ROSEN: We know that. We just want
16 to be shown a chart that tells us that there is 49.6
17 or 29.6.
18 MR. ELLIOT: No, it's not. It's about
19 42, because I know the B&W data. So above 42. I
20 don't know how much above.
21 MR. ROSEN: Come back to the full
22 Committee with the chart.
23 MR. ELLIOT: I feel bad.
24 MR. ROSEN: Ah, see here you do it.
25 MR. ROWLEY: Licensee is required to

1 calculate the -- or RT pressurized thermal shock
2 value for each material located within the beltline
3 of the reactor pressure vessel. The materials
4 provide adequate protection against pressurized
5 thermal shock events if the referenced temperature
6 within limits. The criteria is less than 300 degree
7 fahrenheit, and Ginna's is at 271. So they're
8 within the criteria and the staff finds that
9 acceptable.
10 DR. WALLIS: This is all calculated
11 using a formula with fluence and all that sort of
12 stuff in it?
13 MR. ROWLEY: Yes.
14 DR. WALLIS: What happens when the
15 surveillance data take and they don't agree with the
16 calculation? What do you do?
17 MR. ELLIOT: This is Barry Elliot.
18 The 271 is from the surveillance data.
19 DR. WALLIS: It comes from the
20 surveillance data.
21 MR. ELLIOT: It comes from the
22 surveillance date. The original evaluation from
23 that licensee didn't have it. They just used the
24 original, as you said, calculation using the tables
25 cooper and the fluence. And it turns out that Ginna

1 is a very plant in the sense that the actual
2 limiting material for their vessel beltline is also
3 in their surveillance program. And so they were able
4 to actually take the data from their surveillance
5 program and calculate the amount of embrittlement
6 followed the guidance in Reg Guide 1.99 Rev. 2.
7 That's the only open issue we have. We
8 just have to go over that data to see that whether
9 or not it complies with the guidance in Reg Guide
10 1.00 Rev. 2.
11 DR. WALLIS: Okay.
12 MR. ELLIOT: If it does, then that's the
13 number.
14 DR. WALLIS: How do you get RT_{PTS} from
15 surveillance data? You take a sample and you test
16 it at various temperature, or what do you do with
17 it?
18 MR. ELLIOT: No, no. What you do is you
19 calculate the amount of embrittlement by the shift
20 in the 30 foot pound transition temperature. You get
21 it for the different capsule data for different
22 fluences. Then fit the data for the different
23 fluences to --
24 DR. WALLIS: So it's another ASME semi-
25 curve.

1 MR. ELLIOT: It's not an ASME semi-
2 curve. It's a best-fit curve.
3 DR. WALLIS: Okay.
4 MR. ELLIOT: Of the data of shifted 30
5 foot pound energy versus temperature of fluence.
6 DR. WALLIS: More like the RT_{PTS} direct.
7 MR. ELLIOT: And that gives you a
8 transition temperature shift.
9 DR. WALLIS: Okay.
10 MR. ELLIOT: You take that, you add it
11 to the initial plus to margin value and you get a
12 total RT_{PTS} value.
13 MR. ROWLEY: There was one open item,
14 and Barry just talked about that.
15 CHAIRMAN BONACA: So this open item
16 really is more like confirmatory item almost. This
17 open item is more of a confirmatory item?
18 MR. ELLIOT: Right. We have to just go
19 through the data to see if all the data -- not only
20 do they have the weld data for their vessel, but
21 they also have correlation monitor material. We have
22 to go to check that to see. We have certain parts of
23 the guidance in the Reg Guide which they have to
24 comply with.
25 CHAIRMAN BONACA: Okay.

1 MR. LEITCH: The open item in the SER
2 says in June 10, 2003 letter the applicant changed
3 its method of determining the referenced temperature
4 for pressurized thermal shock. What was that change
5 all about, or was that different than you're just
6 describing?
7 MR. ELLIOT: It's just exactly what I
8 said.
9 MR. LEITCH: Oh, I see. That is what
10 you're describing.
11 MR. ELLIOT: They originally did it
12 without the surveillance data.
13 MR. LEITCH: Okay.
14 MR. ELLIOT: And then they said -- in
15 the original application it was done without
16 surveillance data.
17 MR. LEITCH: Okay. I understand.
18 Barry, I wasn't sure if this was some other change.
19 MR. ELLIOT: No, that was the change.
20 MR. LEITCH: That was the change? Okay.
21 Thank you.
22 MR. ROWLEY: The applicant committed to
23 updating their pressure/temperature curves prior to
24 the period of extended operation. And they're going
25 to either do that in a pressure/temperature limit

1 report or in technical specifications.

2 The applicant identified metal fatigue

3 analysis of various components and systems as TLAAs,

4 of which the reactor cooling system is one of them.

5 And that's designed to a Class 1 of the ASME Code.

6 Design criteria for a failure of

7 analysis of ASME Code Class 1 requires a CUF of less

8 than one. All components at Ginna have a CUF less

9 than one for the --

10 DR. WALLIS: That's the table we saw

11 from the applicant earlier?

12 MR. ROWLEY: Correct.

13 DR. WALLIS: They were much less than

14 one, except for one.

15 MR. ROWLEY: Right. Right.

16 And Ginna is the first applicant to have

17 CUFs less than one, even when environmental effects

18 are included. Just something matched with them.

19 There were two confirmatory items, and

20 both were dealing with updating their UFSAR.

21 Environmental qualification of

22 electrical equipment. The applicant has adequately

23 identified the TLAA for EQ components. The EQ

24 program's consistent with GALL. And staff concluded

25 EQ program will continue to manage equipment in

1 accordance with 10 CFT 50.49 and meets
2 54>21(c)(1)(i)(ii) and (iii). There are no open or
3 confirmatory items.
4 MR. LEITCH: As I reviewed these TLAAs,
5 there's a whole lot of specific TLAAs for various
6 electrical components, you know, right down to the
7 details of a discussion of the (1)(a) and (c) ASME
8 safety injection pump motor and (1)(b) safety
9 injection pump motor.
10 And I guess I was just curious as to how
11 these were justified for 60 years of operation. But
12 when I looked at it, it was like so many of these
13 things, it ended in a little bit of frustration for
14 me. Because all it really says, well, in most cases
15 it says it's just justified -- it's for 40 years now
16 and by the time the 40 years is up, we'll take a
17 look at it and see if we can extend the qualified
18 life for replacement or refurbish it, but it doesn't
19 really address the methodology for how this will be
20 done, at least not so far as I can see. And it
21 seems as though time after time here in all this
22 qualification of electrical equipment it's another
23 one of those things where we'll figure it out later,
24 is basically what it's saying. Is that a fair
25 assessment of what's going on here?

1 MR. ARRIGHI: WE did have a meeting with
2 the applicant where they brought their calculation
3 for a number of components. They were, again, I
4 think some of them were originally calculated for 40
5 years and they recalculated for 60. And the staff
6 did review those calculations.
7 Our reviewer right now is not here
8 today. He's on vacation.
9 I don't know if George, if you remember
10 some of the specifics and can help me out.
11 MR. WROBEL: Yes. George Wrobel from
12 RG&E.
13 Yes. The EQ calculations that we did,
14 we've recalculated probably 95 percent of the EQ
15 components that are on a master list that we want to
16 extend from 40 years to 60 years. Those calculations
17 have all been completed. And a vast majority, I
18 think -- well, 10 to 12 of those were reviewed by
19 Mr. Saba during that review.
20 We're not putting off any of the
21 qualification calculations. They should all be done
22 imminently. The only ones we haven't done were a
23 few that we feel that we will not extend to 60
24 years. We're going to replace those anyway.
25 So all the calculations have been

1 completed already. We're not leaving a legacy or a
2 negative legacy here.
3 MR. LEITCH: So what I'm looking at here
4 are the exceptions then? I mean, it seems like none
5 of these are in this section, 4.4, none of these
6 justified or qualified for 60 years. They all talk
7 about their existing qualification for 40 years, and
8 some cases 44 years. And it seems to say that in
9 the future we'll decide whether that qualification
10 can be extended or whether we have to replace or
11 refurbish this.
12 MR. WROBEL: Well, we can provide -- if
13 there's additional detail needed by the NRC, we can
14 provide that. But there are very few calculations
15 left that don't already go to 60 years. So the
16 final SER should sound different than that.
17 MR. LEITCH: Okay.
18 MR. ARRIGHI: Again, the staff did
19 review, you know, ten or twelve of those
20 calculations, look at the methodologies and the
21 assumptions and they were satisfied with the
22 calculations.
23 MR. LEITCH: So it is not as though
24 there is more recent information than exists in this
25 document?

1 MR. ARRIGHI: And that's the SER or the
2 application?
3 MR. LEITCH: This is the application.
4 CHAIRMAN BONACA: Application. Because
5 the SER says --
6 MR. ARRIGHI: I think the SER, he
7 specified which calculations he reviewed. I believe
8 he went in detail and made a listing of those
9 calculations that were reviewed, again by Saba.
10 Again, I didn't compare them against what's in the
11 application, though.
12 MR. ROWLEY: Section 4.5 concrete
13 containment tendon prestress. Prestress losses
14 estimated for 40 to 60 years. The applicant did
15 provide trending analysis. And the staff considered
16 the applicant's actions adequate during the period
17 of extended operations and there were no open or
18 confirmatory items.
19 CHAIRMAN BONACA: If I remember, they
20 had a program to retention some of them?
21 MR. ROWLEY: Yes.
22 CHAIRMAN BONACA: There's a commitment
23 to go to retentioning?
24 MR. ARRIGHI: I know they were planning
25 on retentioning them all in 2005, I think the

1 remaining ones that weren't retentioned in 1980, I
2 think. In 1980 they retentioned a 137.
3 I have to look at the commitment list.
4 I don't know if that was the commitment or not.
5 MR. WILSON: Our commitment was to
6 retention the remaining 23 tendons into 2005.
7 CHAIRMAN BONACA: I remember that.
8 MR. ARRIGHI: Okay. And that is the SER
9 in Appendix A.
10 DR. WALLIS: Now is "adequate" a good
11 grade or is that fairly adequate, or what's the
12 meaning of "adequate?" Do they do more than is
13 necessary? Do they do the bare minimum? What does
14 "adequate" mean?
15 MR. ARRIGHI: Cliff Munson.
16 MR. MUNSON: They're required to sample
17 5 percent of the population of their tendons, and
18 they do more than that. I can't remember the
19 specific percentage, but I think it's above ten
20 percent.
21 DR. WALLIS: Yes. I think, though, this
22 is a judgment. There is a metric you and just check
23 that they have actually met the requirements then?
24 MR. MUNSON: Right. Every five years
25 they do their lift-off measurements.

1 MR. ARRIGHI: And again, they do three
2 times of the requirement. I think the requirement
3 is four percent, and they do 12 in their
4 surveillance.
5 MR. ROWLEY: 4.6 is containment liner
6 plate and penetration fatigue. The staff requested
7 a list of the design transients and corresponding
8 cycles that were specified in the design of the
9 containment liner penetration. The staff finds the
10 design transients and corresponding cycles
11 acceptable. They conclude that the TLAAs has been
12 projected to the end of extended period of
13 operation. And there were no open or confirmatory
14 items.
15 And there were seven other plant
16 specific TLAAs. All demonstrated that the TLAAs
17 have been projected to the end of the period of
18 extended operation. Also, there were no open or
19 confirmatory items.
20 MR. ARRIGHI: Well, that concludes the
21 staff presentation, unless there are any further
22 questions.
23 DR. WALLIS: It's interesting. A fly
24 wheel is a moving part and I thought moving parts
25 didn't appear in these renewal.

1 DR. LEE: Yes. This is Sam Lee. For the
2 TLAA, the active components are also part of the
3 TLAA.
4 DR. WALLIS: They are also part. Okay.
5 Thank you.
6 CHAIRMAN BONACA: Okay. Do we have any
7 additional questions for the presenters? If none,
8 then I think what we're going to do is, would you
9 like to take a break before we go around the table
10 and talk about two things we have to do. One is
11 some views by members about where we are, what we
12 need. And also some expectations for the full
13 Committee meeting, which is the second.
14 Okay. So, we can go to right now,
15 actually, and then complete our meeting. Take a
16 break later.
17 So why don't we go around the table.
18 Starting with you, Graham, if you could give us your
19 views?
20 DR. WALLIS: Well, I don't see any
21 significant issues. These are getting so routine,
22 these license renewal.
23 I do think that in terms of the
24 presentation to the full Committee, every time you
25 can have some numbers or some criteria, or

1 something, or a table, it's more convincing than
2 saying the staff finds the work adequate, or
3 something like that. And if you can buttress it
4 with something quantitative or some metrics, that
5 always is more convincing.
6 So, I would just suggest that.
7 MR. ARRIGHI: Thank you.
8 CHAIRMAN BONACA: Peter?
9 MR. FORD: I'm cautiously satisfied with
10 disposition of all the open items and the
11 confirmatory items. And I, again, am cautiously
12 satisfied about the completeness of the review
13 that's been done by the staff.
14 And the reason why I keep saying
15 cautious is that I'm being asked to signed off or
16 approve a memo which really should be based on data.
17 And, as Graham says, we haven't seen a lot of data
18 upon which some of these judgments are being made.
19 And that's maybe because of time.
20 I'd like to see in the future as
21 appropriate some of the analyses that has been done.
22 And I'm going to dig into the questioning, I'm
23 pretty sure that data does exist. It just hasn't
24 been presented.
25 The one I feel I keep hitting on is

1 these questions of one time inspections and the
2 opportunistic in terms of place and time and when
3 you're going to do these one time inspections. And
4 I think somehow or another we've got to where
5 appropriate, and that means in the question of the
6 consequence of the failure of these components
7 subjected to a one time inspection, I think we have
8 to tackle that sometime in the future.
9 And, again, as I've said before, it's
10 not specific to this particular plant. It's specific
11 to all the plants who we have been doing our LRAs
12 on.
13 That's my main point.
14 CHAIRMAN BONACA: Yes. Well, let's talk
15 about briefly. Because, I mean, you're talking
16 about in the future it could be valuable for us to
17 have an example, at least of some of the technical
18 information behind a specific issue.
19 MR. FORD: Yes.
20 CHAIRMAN BONACA: So that the Committee
21 will have an understanding that in fact, or a
22 confirmation that the judgments are not based purely
23 on some quantitative consideration, but also there
24 is a technical basis behind that. You know, we're
25 not party to the kind of information normally. So

1 it may be a good exercise for us to do. It doesn't
2 have anything to do with this application.
3 MR. FORD: Exactly.
4 CHAIRMAN BONACA: But we may try to look
5 for a forum. And maybe the next application that
6 comes, start with that, we could have some specific
7 example.
8 MR. FORD: Yes.
9 CHAIRMAN BONACA: And an example could
10 be, for example, in a specific one time inspection.
11 Because this has come up again frequently the
12 concern the Committee has with the one time
13 inspections as, you know, what they mean and why are
14 they adequate rather than a program.
15 Now, I always think that the one
16 inspection could be the springboard for a problem.
17 What I mean is that if you expect once and you find
18 that in fact your expectation is not supported by
19 the inspection, then you have to respond to the
20 program. And so I would see that coming through.
21 But we've had a lot of questions about one time
22 inspections.
23 One has been should the confirmatory of
24 the fact that we do not expect to have something
25 happening, and not vice versa, okay.

1 And that's why I asked the question
2 about the former bolts. Because, you know, even in
3 case you have no expectations to have a need for it,
4 well since you did something before, it may be --
5 but anyway, I don't want to get back on that issue
6 again.
7 So that could be helpful to this
8 Committee if we took the next application, take one
9 of the one time inspections and expand on it so that
10 we can see what the logic was behind and have a
11 better understanding of it.
12 MR. GILLESPIE: Yes, I think we can do
13 that. In fact, we'll take under consideration.
14 Because this whole thing's going to get aggravated
15 more and more.
16 CHAIRMAN BONACA: Yes.
17 MR. GILLESPIE: As we update GALL and
18 bring in past practice into GALL. The premise of
19 GALL is reference GALL and keep the documentation on
20 site.
21 CHAIRMAN BONACA: Yes.
22 MR. GILLESPIE: So two years from now
23 you're going to probably see significantly less in
24 an application than you even see today, which is why
25 we've got audit teams, and we had an audit team go

1 to Ginna to look at the biocabinets full of
2 background material.
3 So for the audit team to bring some
4 details back on one of the audits, one of the
5 issues. We can document it maybe in the audit
6 report and then we'll have a record.
7 CHAIRMAN BONACA: Yes. And you're
8 absolutely right. And we are diverging from a
9 standard process of review of the SERS. For
10 example, as I mentioned in the presentation to the
11 Commission, where I'm looking much more at unique
12 things about this plant that really are not
13 addressed through GALL, but -- you know, and so if
14 we have plant where we have a thermal shield failure
15 with damage, I'm concerned about how to address the
16 damage in the next 20 years: What kind of
17 inspection and so on. So this is unique to that
18 plant. And so we're looking for those kind of
19 elements.
20 And I think we should do it in a way
21 that doesn't penalize the licensee that comes as the
22 next review, see if there's an example of what
23 you've done.
24 MR. GILLESPIE: Yes.
25 CHAIRMAN BONACA: And that would be

1 helpful to us.

2 MR. GILLESPIE: Okay.

3 CHAIRMAN BONACA: Graham?

4 MR. LEITCH: Well, a couple of things.

5 I'm a little concerned about the qualification of

6 electrical equipment. I mean, I see in the license

7 renewal application a lot of open issues. I see in

8 the SER some of those are closed, apparently to the

9 satisfaction of the staff, but not all of them.

10 Now, I'm not sure if I'm just talking

11 about a timing issue here. In other words, maybe

12 they are more closed now and it'll become apparent

13 in the final SER just what the status of those is,

14 but I'm just not sure about that.

15 But I see, for example, safety injection

16 pump motors and I see a list in the SER of

17 calculations that have been reviewed. But the

18 safety ejection pump motor EQ is not among those

19 calculations that have been reviewed.

20 Now I don't know. Perhaps in the month

21 or so since this has been written that's in

22 progress. I just don't know that. But I just think

23 that what we're saying here or what the license

24 renewal application seems to be saying is we'll

25 worry about that in the future. And I think that

1 issue, perhaps, could be resolved now.

2 MR. GILLESPIE: Yes. I think the

3 disconnect that you heard was that the licensee in

4 parallel with having submitted the application was

5 doing these calculations. And we reviewed

6 illustrative applications of his process, but we

7 didn't review every single one of them. And you're

8 not going to see a one-to-one correspondence between

9 the applicant's chart on his submittal in the SE.

10 So those are illustrative reviews in the SE.

11 MR. LEITCH: So it's to gain confidence

12 in the methodology, not necessarily a --

13 MR. GILLESPIE: Not a 100 percent

14 confirmation of each component.

15 MR. JACKSON: Do you mind if I make a

16 comment on this? This is Jarred Jackson from Ginna.

17 The basic process environmental

18 qualification is such that you replace the component

19 when you reach the limit that was previously

20 analyzed. That's actually the most conservative

21 state that you could be in.

22 So if we get to a situation where we're

23 saying we're not analyzing it right now, we're in

24 the conservative state that the EQ rule is already

25 going to replace that component.

1 So in some of these instances that
2 you're bringing up, we may actually be more
3 conservative than we need to be for license renewal.
4 At any point in the future we may redo that analysis
5 such that we say the temperatures are lower or not
6 as much irradiation in the field. And those are the
7 types of data that comes into consideration for
8 these analysis.
9 MR. LEITCH: Yes. Okay. That's a good
10 explanation.
11 I guess the other more general issue I
12 had was related to this issue that was mentioned on
13 the first couple slides regarding the sale of the
14 plant. I don't know what the NRC's position would
15 be if that is in some kind of progress at the time
16 that this license renewal application is becoming
17 final. In other words, are we dealing with
18 Rochester Gas & Electric here or are we dealing with
19 the new people, whoever they may be. It seems to me
20 it would need to be one or the other, but not
21 crossing over someplace in midstream here. Maybe
22 that's not a safety issue, it's a legal financial
23 kind of an issue. But I just wonder how we would
24 deal with that.
25 MR. MECREDY: It's Bob Mecredy from

1 RG&E.

2 In fact, license renewal will be done by

3 RG&E because the plant sale is contingent upon a

4 renewed license.

5 MR. LEITCH: Oh, okay.

6 MR. MECREDY: So license renewal is

7 first and then transfer. It makes sense. The new

8 owner, they're interested in 20 some odd years, not

9 2009.

10 MR. LEITCH: Sure.

11 MR. MECREDY: So that's the basis for

12 the sale.

13 MR. LEITCH: Yes, okay. Well, that

14 answers that question.

15 MR. ROSEN: And, Graham, the new owner

16 will have to meet all the certain tests for

17 financial resources and other things.

18 MR. LEITCH: Right. Understand that.

19 MR. ROSEN: In order to be able to

20 accept the new license.

21 MR. LEITCH: Yes, I understand that.

22 MR. MECREDY: Yes, that's right.

23 MR. ROSEN: And it makes logical sense,

24 and it's a two step process.

25 CHAIRMAN BONACA: I think it's a good

1 question. Because I mean, that owner, I mean so
2 much of this -- this is a promise of maintaining
3 this plant to this level. And I think, actually,
4 that there are a lot of good commitments from this
5 plant. I mean, you know the commitment to replace
6 the head at this time, I think is a proactive one.
7 And so there'll be a new owner, they may think
8 differently.
9 So, but I agree with you that --
10 MR. ROSEN: The new owner did come in
11 and say, "Yes, well that was the other guy. That
12 wasn't us."
13 CHAIRMAN BONACA: Well, you may see
14 that.
15 MR. LEITCH: Well, I think as long as
16 it's one side or the other and it's been explained
17 this will be done before the transfer the ownership-
18 -
19 CHAIRMAN BONACA: Yes, I agree.
20 MR. LEITCH: -- as long as that's clean,
21 I don't have any problem with that.
22 CHAIRMAN BONACA: Yes. I agree. I
23 agree.
24 MR. ROSEN: The new owner has to come in
25 and has to accept all the previous commitments of

1 the licensee?

2 CHAIRMAN BONACA: I agree. Right. I

3 agree.

4 MR. ROSEN: It's just a new licensee for

5 the old commitments.

6 MR. LEITCH: Yes, and there's no

7 question about that. It's just that if this process

8 was someplace midstream when that ownership was

9 transferred, it could be somewhat confusing. And

10 that's what was concerning me. But we're hearing

11 that that will not be the case.

12 I don't know if you wanted us to talk a

13 little bit about points to be emphasized at the full

14 Committee meeting.

15 CHAIRMAN BONACA: Yes. Yes.

16 MR. LEITCH: And one of the things that

17 I think is important in that context is the

18 management of these commitments. And I guess RG&E

19 may be in a little awkward position to defend

20 exactly how these commitments will be managed with

21 this transfer of ownership in the offing.

22 But I guess the thing that I would like

23 to hear addressed more is there are a number of

24 places here where there are future commitments. And

25 how are those commitments going to be tracked? Is

1 there an on-site organization that's going to track
2 these commitments? As plant modifications over the
3 years, how does that all factor into the license
4 renewal program? And just how is this going to
5 continue to be a dynamic process until the period of
6 extended operation is entered?
7 And I don't know if you can shed any
8 light on that at the full Committee meeting or now.
9 And it may be a somewhat difficult situation because
10 of the change of ownership.
11 MR. MECREDY: This is Bob Mecredy again.
12 We can address that. George will
13 address that at the full Committee. But
14 fundamentally it's the same process we use now to
15 address commitments we have made in the past for
16 things we have had to do subsequently or things that
17 may still need to be done between now and the end of
18 the current license. So the process for managing
19 commitments is really just a case of how far in the
20 future as opposed to anything that's different. And
21 certainly commitments we have made in the past
22 remain commitments regardless of change in licensee,
23 unless the new owner decides to come back to the
24 staff and change the commitments. There's a
25 standard process for that -- but we will talk about

1 commitments and how we manage them. And we do have
2 a system and a process on-site that tracks
3 commitments and ensures that they're done, and
4 there's various categories with MRP and our sequence
5 being at the top of the list. And that is actively
6 managed in accordance with our practices and
7 industry standards. So we can talk about.
8 MR. LEITCH: What concerns me is not so
9 much changing the commitments as assuring somehow
10 what is the process for assuring that the
11 commitments will be tracked and completed by the
12 time of entrance into the period of extended
13 operation.
14 MR. MECREDY: We'll address that.
15 MR. GILLESPIE: Graham, just from our
16 side since they're making up the list and we have to
17 check it, the majority of things like participating
18 in the MRP program and those things are in the FSAR.
19 So that you've got as a minimum once a new license
20 is issued, a 50/59 type control on the FSAR. So
21 there's a safety level -- it redefines the safety
22 level for the operating facility once they get the
23 new license.
24 The other thing is we have a custom
25 inspection procedure for each plant that's written

1 based on that commitment list, which the staff is
2 then maintaining which will get inspected before the
3 end of the term. And so that's being done for every
4 single plant.
5 So you've got the FSAR list, there's
6 other things, and then you've got a specific
7 inspection procedure for each plant. And this
8 actually came out of earlier ACRS staff discussions
9 on how are you keeping up with the list. So there's
10 a bit of formality in it. And the industry overall
11 agreed to put these in the FSARs, which previously
12 they did not do. So the first couple of plants
13 didn't necessarily have that.
14 MR. LEITCH: Yes. I guess what I'd like
15 to hear a little more about how the licensee plans
16 to manage that.
17 MR. GILLESPIE: Yes.
18 MR. LEITCH: I mean, I know what you're
19 doing. But I guess there have been some licensees
20 that have come and told us basically that plant
21 license renewal is just integrated into their normal
22 process of doing business. Others have seemed to
23 indicate that they kind of have a permanent license
24 renewal organization that manages all these things
25 and assures that they get done.

1 And I guess I'd just like to hear a
2 little discussion about how Rochester Gas & Electric
3 plans to do that. And I guess their plans, the
4 method by which they manage these things are
5 probably not hard and fast commitments. I mean the
6 commitments are hard and fast, but the method they
7 use to manage them are so that they have some
8 latitude there.
9 MR. GILLESPIE: Yes.
10 MR. LEITCH: And perhaps the new owner
11 may see it a little differently than Rochester Gas
12 and Electric. But at least I'd like to hear how
13 Rochester Gas & Electric --
14 MR. GILLESPIE: Yes. The danger here is
15 that the onus is now shifted once the license
16 issued. The onus is kind of shifted to the staff to
17 confirm it.
18 MR. LEITCH: Yes.
19 MR. GILLESPIE: And if a commitment is
20 not met, then now we're into the compliance arena
21 relative to any actions we're going to take because
22 the license is gone.
23 MR. LEITCH: Right.
24 MR. GILLESPIE: So there's a kind of
25 shift of burden once we issue that license.

1 MR. LEITCH: Yes. Yes.

2 MR. MECREDY: Bob Mecredy again.

3 I would argue also that it's our

4 commitment and it's our obligation to meet it, so we

5 still have even with the new license, an extended

6 period, it's still our nickel and we're obligated to

7 do it. Staff has the role of inspecting to assure

8 we've done it, but it's really no different, again,

9 than any other commitment we've ever made. Once

10 we've made the commitment, we're obligated to do it

11 as part of our license where it's part of our normal

12 correspondence with the staff.

13 MR. LEITCH: Yes.

14 CHAIRMAN BONACA: Any other issues?

15 MR. ROSEN: The difference is the

16 magnitude, Bob. The magnitude of the number of

17 commitments and the length of time over which they

18 are operable. You know, it's a question of degree

19 more than anything else.

20 CHAIRMAN BONACA: Steve, your views?

21 MR. ROSEN: Well, I thought this was a

22 very well done application and I have only two

23 questions that remain. One is a commitment I made

24 earlier, I'll just reenforce it.

25 When you come back to the full

1 Committee, I really would like to reactor vessel
2 upper shelf energy chart revised to show the value,
3 just like the pressurized thermal shock chart that
4 shows the value.
5 And then I'd like to take you back to a
6 question on the station blackout diagram. Can you
7 put that back up again?
8 Now, there was a question, an open item
9 that staff had identified that there were two cables
10 from the off-site power path that bring power into
11 the safety buses that were not in scope.
12 MR. ARRIGHI: Yes.
13 MR. ROSEN: Now, are they now in scope?
14 MR. ARRIGHI: No. The applicant's
15 position is that these two cables that power the --
16 MR. ROSEN: Which two are they?
17 MR. ARRIGHI: These outer two cables
18 here. Those two cables, their statement is that
19 they don't need to power the service water pumps
20 because they can get a cold shutdown within 72 hours
21 without those. That's their CLB.
22 CHAIRMAN BONACA: Without what?
23 MR. ARRIGHI: Without the service water
24 pumps.
25 CHAIRMAN BONACA: Without the service

1 water pump.

2 MR. ARRIGHI: And those cables supply

3 the service water. This bus supplies the service

4 water pump.

5 MR. ROSEN: And the way they will do

6 that is by feed and bleed of the secondary side into

7 the containment?

8 MR. ARRIGHI: Correct. Yes, they would

9 use the standby aux feedwater or the aux feedwater

10 pumps to --

11 MR. ROSEN: To keep the speed of the

12 steam --

13 MR. ARRIGHI: -- feed the steam

14 generators and then dump steam --

15 MR. ROSEN: This is in station blackout

16 now, right?

17 MR. ARRIGHI: Yes.

18 MR. ROSEN: We're talking about station

19 blackout conditions where they have steam but no

20 power.

21 CHAIRMAN BONACA: Yes, and they -- I'm

22 sorry.

23 MR. ROSEN: The DC power supplies to

24 control the turbine driven aux feed pump, refilling

25 the steam generators with the steam that the steam

1 generators are providing as the steam pressure
2 decays, and dumping water on the floor through
3 manual valve into the containment?
4 MR. ARRIGHI: Correct.
5 MR. ROSEN: And they've got volunteers
6 for this?
7 MR. WROBEL: Mr. Rosen, we've mixed up
8 to licensing conditions here.
9 MR. ROSEN: Okay. Help me unmix them.
10 MR. WROBEL: Okay. Forgive me for this
11 if I contributed to it.
12 With respect to the 4160 volt cables
13 going to the buses, should they be lost on a station
14 blackout event, that's one condition. It's
15 different than the fire condition that we were
16 talking about earlier for the water solid steam
17 generator cool down, although there are issues with
18 respect to a fire in the screen house that might
19 drive you to a water solid steam generator cool
20 down. It's more than loss of just these cables.
21 So the cable itself here, you are
22 correct in assuming that on a station blackout I
23 have lots of stored energy in my steam generators
24 that I'm going to use to run my turbine drive
25 auxiliary feedwater pump. And in order to refill my

1 water source for the turbine driven aux feedwater
2 pump, I may elect to use my fire water system to add
3 water to my storage tanks.
4 MR. ROSEN: And you can do that because
5 it has a diesel driven fire pump?
6 MR. WROBEL: I can do that because it's
7 a diesel driven fire pump. So that's one of the
8 issues.
9 The other --
10 MR. ROSEN: That's one issue. Now I
11 know how you're going to get sustained water into
12 the secondary side of the steam generators. Now,
13 how are you going to --
14 MR. WROBEL: That's not a feed and
15 bleed.
16 MR. ROSEN: -- get steam to the feed
17 pumps.
18 MR. WROBEL: That's not feed and bleed.
19 That particular evolution is normal cool down in a
20 station blackout using turbine driven aux feed
21 water.
22 MR. ROSEN: And diesel fire pump.
23 MR. WROBEL: And diesel fire pump.
24 MR. ROSEN: You were telling me?
25 MR. WROBEL: The feed and bleed

1 evolution is an evolution that would occur if we
2 lost service water for the component cooling water
3 system, the ultimate heat sink, so to speak. So I
4 can run on an accident. I can run my diesel driven
5 or my emergency diesel generators without service
6 water. And I do that by virtue of hooking them up
7 to fire water systems; that's one of those SOP
8 topics. So I don't need service water in order to
9 immediately mitigate the consequences of the event,
10 but long term if I want to go to long term cool
11 down, because I don't want to stay in hot shutdown,
12 I want to drive myself to cold shutdown --
13 MR. ROSEN: In a station blackout. No.
14 MR. WROBEL: In a fire event.
15 MR. ROSEN: In a fire, not a station
16 blackout where you have the diesels running to give
17 you power, on-site power --
18 MR. WROBEL: I still don't need service
19 water because I can use this water solid steam
20 generator cool down method, thereby avoiding the
21 necessity of having component cooling water for RHR
22 system, which would be normally feed from the
23 service water which is lost because of fire.
24 CHAIRMAN BONACA: See, one thing that
25 concerns me about, and maybe I'm wrong but I want to

1 bring up, some of this, you know, not orthodox ways
2 of providing for cooling, etcetera, seems to be
3 coming from the SEP. Okay. In the SEP you -- now
4 that was really a program that was tailored for
5 plants that were supposed to operate 40 years and
6 did not meet the design basis or requirements of the
7 SRP, therefore you allow for, let's say, unorthodox
8 ways of dealing with these issues.
9 Now you're using it to justify 20 more
10 years of operation. I am not sure that logically
11 there it's satisfying to me. I just throw it on the
12 table.
13 MR. ARRIGHI: Again, we do have the open
14 item on this issue and we're still evaluating it.
15 MR. ROSEN: Is there more to be said or
16 is that the whole story?
17 MR. WROBEL: In a fire evolution where
18 you would use the water solid steam generator cool
19 down method, the turbine drive auxiliary feed water
20 pump is not the water source. It's the standby
21 auxiliary feed water pump. Those additional two
22 pumps that we installed and talked about earlier
23 today, that's the water source that puts the water
24 into the secondary system. Those two are fed from
25 the city water system, if necessary.

1 If you lose service water, we have two
2 places that you can hook up the fire loop. One is
3 the emergency diesel generators, the other to the
4 suction of the standby auxiliary feed water pumps.
5 So what we've somehow mixed up here
6 today is two events; the station blackout and a fire
7 event.
8 MR. ROSEN: Station blackout is that
9 event where you --
10 MR. WROBEL: Station blackout --
11 MR. ROSEN: -- lose all the power on
12 that system right there.
13 MR. WROBEL: Correct. Where I lost my
14 essentially service water.
15 MR. ROSEN: Yes.
16 MR. WROBEL: And now I run my --
17 initially I'm running my decayed heat removal via my
18 turbine driven auxiliary feed water pump. And then
19 as a remake or a refill capacity for my turbine
20 driven auxiliary feed water pump, I use fire water
21 from the diesel driven fire pump and I have an
22 inventory source at that point.
23 MR. ROSEN: And that's the justification
24 for not including those two lines in the scope of
25 license renewal?

1 MR. WROBEL: That's part of the
2 justification.
3 MR. ROSEN: What's the down side of
4 including them in? Anything? Or is this just an
5 argument, what we used to call academic arguments
6 here, but we have a highly influential persons who
7 are in the academics sphere here. And we don't call
8 them academic arguments, because that's the
9 pejorative term.
10 MR. WROBEL: In essence, this is just a
11 discussion for the staff over the breadth and the
12 scope of our current licensing basis and where it
13 starts and stops.
14 MR. ROSEN: Okay. So if you are of a
15 mind to, you could say it's not in our current
16 licensing basis but we could include -- we will
17 include these in our license renewal anyway? You
18 could say that? I mean, that would clarify it?
19 MR. WROBEL: Yes. Yes, sir, we could
20 say that.
21 CHAIRMAN BONACA: Other licensees that
22 don't say things of that kind.
23 MR. ROSEN: Well, I would suggest that
24 you try somehow for the full Committee to make this
25 clearer. Because even though I've listened to the

1 whole argument, I still am -- it' the fog of war,
2 maybe. But I don't understand it exactly, and you
3 know I have I some experience in this area.
4 CHAIRMAN BONACA: And, again, you know,
5 I love to point out what I did not like, and I
6 didn't hear an answer to that. But they're using
7 some unorthodox ways by SRP that are being allowed
8 for your plant because you did not meet the SRP
9 requirements to continue to justify certain
10 unorthodox ways of getting to cold shutdown to
11 exclude components from scope. And I say, yes, it's
12 consistent with your licensing basis. But, you know,
13 what if the plan now goes to 60 years of life, then
14 it goes to 80 years of life. You know, I just feel
15 less comfortable with that. And my concern is that
16 you know the intent of the SEP was not one -- it was
17 a grandfathering of older plants to keep them
18 running for the 40 years of operation.
19 Now, I'm not saying that you're not
20 justified to go to 60, but I feel uncomfortable. I
21 got to think about this.
22 MR. JACKSON: I'd like to comment on
23 that for a moment. This is Jarred Jackson.
24 Part of what we're talking about here is
25 recovery from a station blackout. I'm sure you guys

1 have heard this discussion before.

2 CHAIRMAN BONACA: Sure.

3 MR. JACKSON: And the industry may have

4 interrupted recovery different, understanding what

5 the licensing basis for coping versus recovery. So

6 as an industry, we did not have or did not feel we

7 had recovery as a licensing basis issue. So when

8 the staff had interpreted it in that way such that

9 we are now addressing recovery, we looked at the CLB

10 as a whole. So I don't want to misimpression as if

11 this is an orthodox methodology, because it's also a

12 differing opinion on interpretation of the CLB.

13 So, it's not as if this is very clear

14 cut in the CLB and we're using an unorthodox method

15 of achieving it. You know, we acknowledged the

16 staff's understanding of recovery, and we've

17 attempted to address it and in a manner that I think

18 we both agree on.

19 CHAIRMAN BONACA: I'm saying, however,

20 that most people to recovery station blackout, they

21 want to use their service water. And that's what we

22 have seen from other people; they have to recovery

23 water or use it. And here you have an exception from

24 recovery service water based on, I call it

25 unorthodox when you tie fire water to the

1 secondaries and you keep generating steam for your
2 steam driven pumps by pumping fire water in a steam
3 generator.
4 MR. ROSEN: And draining by manual
5 valves into the containment.
6 CHAIRMAN BONACA: That's right. Into the
7 containment. I mean, you know --
8 MR. ROSEN: Is that what I heard?
9 MR. WILSON: Dave Wilson, Rochester Gas
10 & Electric.
11 But the draining actually happens via
12 some connections into the yard. So you steam via the
13 normal method until you get steam pressure. So
14 you're steaming through the atmospheric relief
15 valves, main steam atmospheric relief valves. And
16 then when you get to a certain condition, you can't
17 get enough steam pressure, then you shift over to
18 adding water to the secondary side and draining that
19 water out, basically using a steam generator as a
20 heat exchanger, you know water-to-water heat
21 exchanger --
22 MR. ROSEN: Now this is a steam
23 generator that has no tube leaks, I hope, because
24 you're not draining --
25 MR. WILSON: That is correct, sir.

1 MR. ROSEN: -- radioactive material to
2 the yard.
3 MR. WILSON: No tube leaks.
4 MR. ROSEN: You have the new steam
5 generators.
6 MR. WILSON: Right.
7 MR. ROSEN: Are they made of impervium?
8 MR. WILSON: They're not made of
9 impervium, but our licensing basis doesn't account
10 for having, you know, significant number of beyond
11 design basis events or unusual things happening at
12 the same time.
13 MR. ROSEN: Well, this whole thing is
14 rather curious is all I have. Mario calls them
15 unorthodox. He has used more stronger words in the
16 past. But I'll stay with that.
17 MR. WILSON: We're quite capable, I
18 think, the full Committee of making a nice
19 presentation on this issue and/or if we don't decide
20 before that point, just put the cables into scope.
21 MR. ROSEN: Okay.
22 DR. WALLIS: Yes. That would be the
23 simplest thing to do.
24 MR. WILSON: It's appearing to be that.
25 CHAIRMAN BONACA: Any other issues?

1 Steve?

2 MR. GILLESPIE: That's all.

3 CHAIRMAN BONACA: Okay.

4 Insofar as my views, first of all what I
5 think of the application. I think that it was a
6 very clear application insofar as the documentation.
7 I thought it was well organized. I mean, I could
8 follow from table-to-table clearly.

9 So, I thought more highly of GALL after
10 reviewing this.

11 I think that I'm impressed by the way
12 that some of the specific commitments have been
13 implemented. I commented on the auxiliary feed water
14 system. I've seen other SEP plants that did not go
15 that far, and so that seems to me like a serious
16 commitment of the station in the past and present to
17 improvements to the plant.

18 And I've been impressed by the quality
19 of the replacements in generators and then the head
20 being ordered now and implemented in 2003, although
21 you have no obvious leakage from the head. So there
22 is, again, I am sure that was driven also by your
23 intent of selling the plant, but whatever reason it
24 may be, it meant enough, and it's even better. So
25 that was significant to me.

1 With regard to the presentations to the
2 full Committee, I think it would be helpful after
3 you have the Systematic Evaluation Program, since
4 most people are aware of that, if you could
5 highlight in your slide the major issues. You know,
6 you had off feed. You may have some others that you
7 want to point out.
8 You do have this bleed and feed on the
9 secondary side, which I have never seen by any plant
10 except in Germany where they use it as a standard
11 way of bleeding and feeding rather than the primary
12 side. So that was interesting. I haven't seen it
13 here. So, you may want to point out some
14 descriptions. Because it was difficult a little bit
15 for a reviewer to understand exactly how the plant
16 is configured, and we did not have the benefit of a
17 FSAR in front of us to look at those features.
18 And I think that pretty much I just
19 don't have any additional comments really here. I
20 think many of them have been by my colleagues here.
21 So for the full Committee, I think we
22 should have some clarification of the SEP, as we
23 said. And otherwise I think that the representation
24 was good. I think you'll have to collapse it down.
25 We have much less time than we have at the

1 Subcommittee meeting.

2 MR. ROSEN: Short one side.

3 CHAIRMAN BONACA: What?

4 MR. ROSEN: We need one revised slide.

5 CHAIRMAN BONACA: Yes, we need revised

6 slide with some quantitative information.

7 But insofar again at the next renewal, I

8 think we should have an example of a quantitative,

9 for example a decision on time inspection that will

10 give us some comfort insofar as --

11 MR. GILLESPIE: I think the next one on

12 the schedule is Summer.

13 CHAIRMAN BONACA: Summer.

14 MR. GILLESPIE: And Summer has no open

15 items right now. And we're not on a schedule for

16 about 3 months. So we'll come with one example so

17 we'll have something to talk about.

18 CHAIRMAN BONACA: Okay. I don't have

19 any other comments on that.

20 So are there any other comments or

21 questions from the members? Any questions or

22 comments from the public? If not, then the meeting

23 is adjourned.

24 Thank you very much.

25 (Whereupon, at 4:23 p.m. the meeting was adjourned.)

CERTIFICATE

This is to certify that the attached proceedings before the United States Nuclear Regulatory Commission in the matter of:

Name of Proceeding: Advisory Committee on Reactor Safeguards Plant License Renewal Subcommittee

Docket Number: n/a

Location: Rockville, MD

were held as herein appears, and that this is the original transcript thereof for the file of the United States Nuclear Regulatory Commission taken by me and, thereafter reduced to typewriting by me or under the direction of the court reporting company, and that the transcript is a true and accurate record of the foregoing proceedings.

Rebecca Davis

Rebecca Davis
Official Reporter
Neal R. Gross & Co., Inc.

GINNA STATION

ACRS
SUBCOMMITTEE MEETING
November 4, 2003

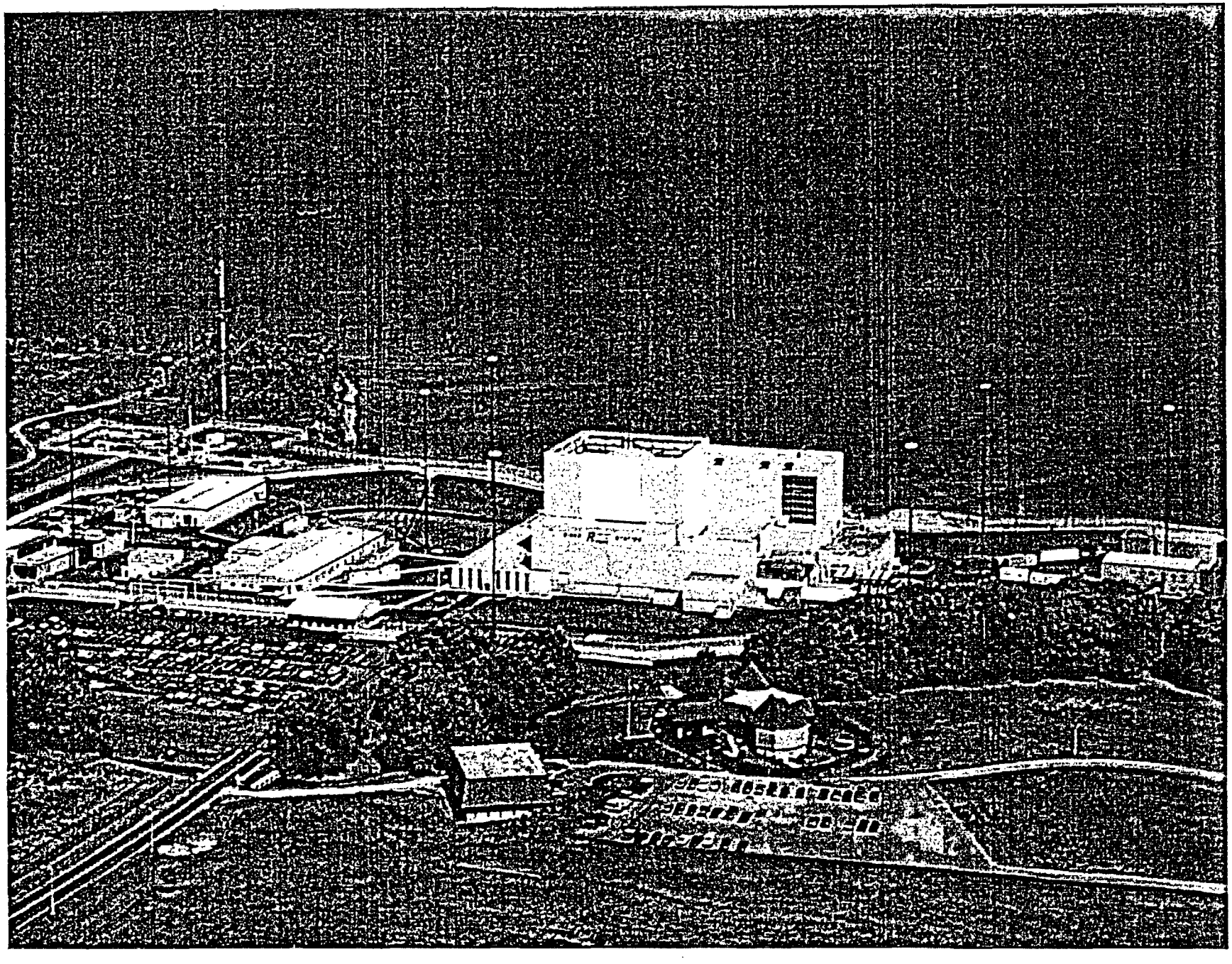

CONTENTS

- Background/History
- Unique Issues/Features
- Current Issues of Interest
  - Reactor Vessel Head Replacement
  - Reactor Vessel Bottom Head Inspections
  - Containment Recirculation Sump Screen
- License Renewal Application Development/Results
- TLAAs
- Programs
- Commitments
- Open Items

BACKGROUND/HISTORY

- Westinghouse 2-loop 1520 MWt PWR
- Initial License granted September 18, 1969
  - Systematic Evaluation Program Plant
  - POL-FTOL Conversion 12/10/84
  - CP-OL Recapture 8/9/91
- Steam Generator Replacement - 1996
- Improved Standard Tech Specs - 1996
- Baffle-Barrel Bolt Inspection/Replacement - 1999
- Reactor Vessel Head Replacement - 2003
- Plant Sale Anticipated Mid-2004

SYSTEMATIC EVALUATION PROGRAM

- Program Included All Plants with Provisional Operating Licenses, began in 1977
- Compare Ginna to Then-Current SRP
- 92 Topics Reviewed
- Resulted in Well-Documented CLB
- Early Use of Risk Perspective
- Cost-Beneficial Plant Changes

UNIQUE ISSUES/FEATURES

- Earliest Operating PWR
- Standby Auxiliary Feedwater System
- Grouted Containment Tendons/Rock Anchors
- Station Blackout Recovery
- All NRC Performance Indicators Green
- All NRC Inspection Findings Green

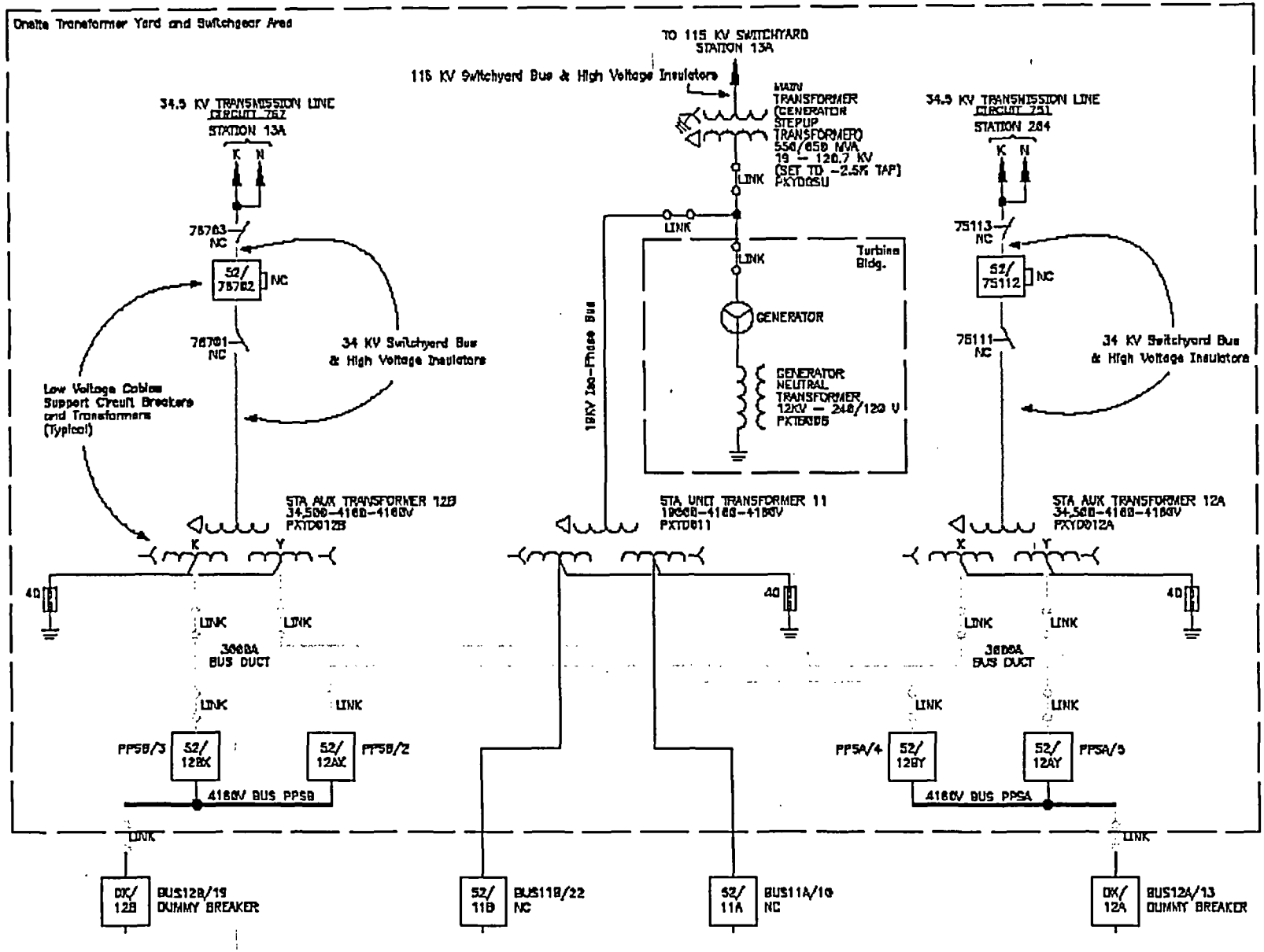
Onsite Transformer Yard and Switchgear Area
TO 115 KV SWITCHYARD
STATION 13A
115 KV Switchyard Bus & High Voltage Insulators
MAIN TRANSFORMER (GENERATOR STEPUP TRANSFORMER) 550/650 MVA 19 – 120.7 KV (SET TO -2.5% TAP) PKYD05U
34.5 KV TRANSMISSION LINE
CIRCUIT 752
STATION 13A
K N
78703 NC
52/ 78702 NC
78701 NC
34 KV Switchyard Bus & High Voltage Insulators
Low Voltage Cables Support Circuit Breakers and Transformers (Typical)
STA AUX TRANSFORMER 12B 34,500-4160-4160V PXTD012B
K Y
4Ω
LINK
3000A BUS DUCT
PPSB/3
52/ 12BX
52/ 12AX
PPSB/2
4160V BUS PPSB
DX/ 12B
BUS12B/19 DUMMY BREAKER
LINK
Turbine Bldg.
GENERATOR
GENERATOR NEUTRAL TRANSFORMER 12KV – 240/120 V PKTE005
19KV Iso-Phase Bus
STA UNIT TRANSFORMER 11 19000-4160-4160V PXTD011
52/ 11B
BUS11B/22 NC
52/ 11A
BUS11A/10 NC
34.5 KV TRANSMISSION LINE
CIRCUIT 751
STATION 284
75113 NC
52/ 75112 NC
75111 NC
STA AUX TRANSFORMER 12A 34,500-4160-4160V PXYD012A
PPSA/4
52/ 12BY
52/ 12AY
PPSA/5
4160V BUS PPSA
DX/ 12A
BUS12A/13 DUMMY BREAKER

CURRENT ISSUES OF INTEREST

- Reactor Vessel Head Replacement
- Reactor Vessel Bottom Head Inspections
- Containment Recirculation Sump Screen

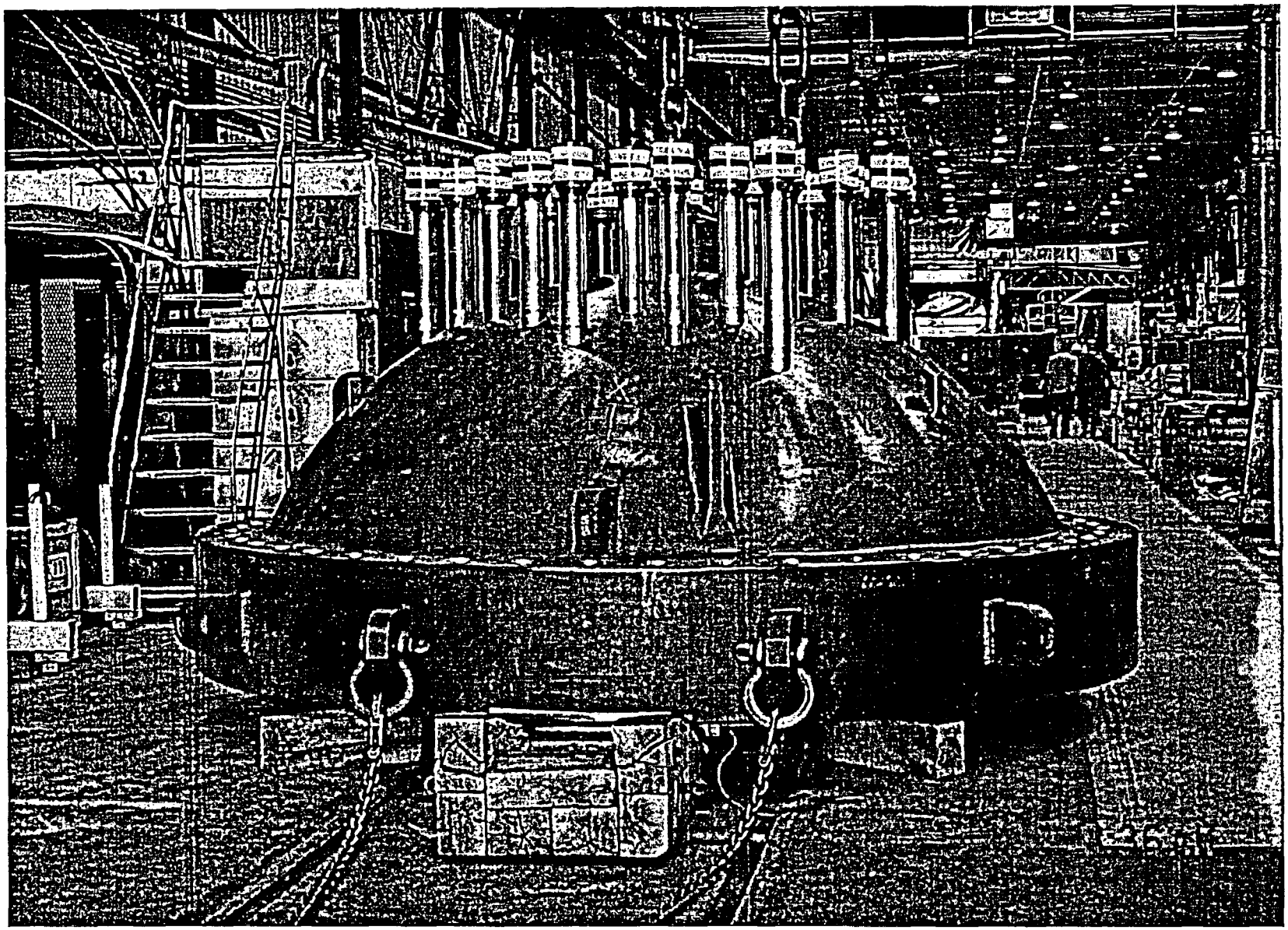

Lower Reactor Vessel Inspection

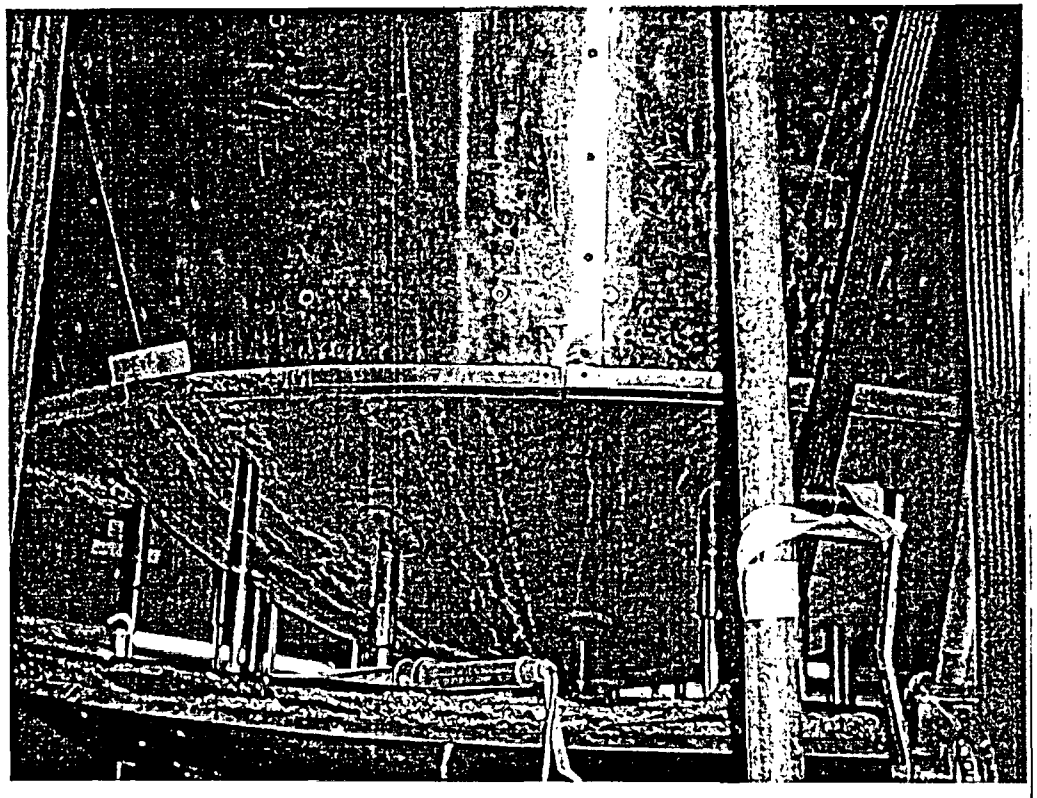

- Insulation lowered to accommodate inspection
- 36 Nozzles examined
  - 360 ° around
  - VT-1 Visual

Lower Reactor Vessel Inspection

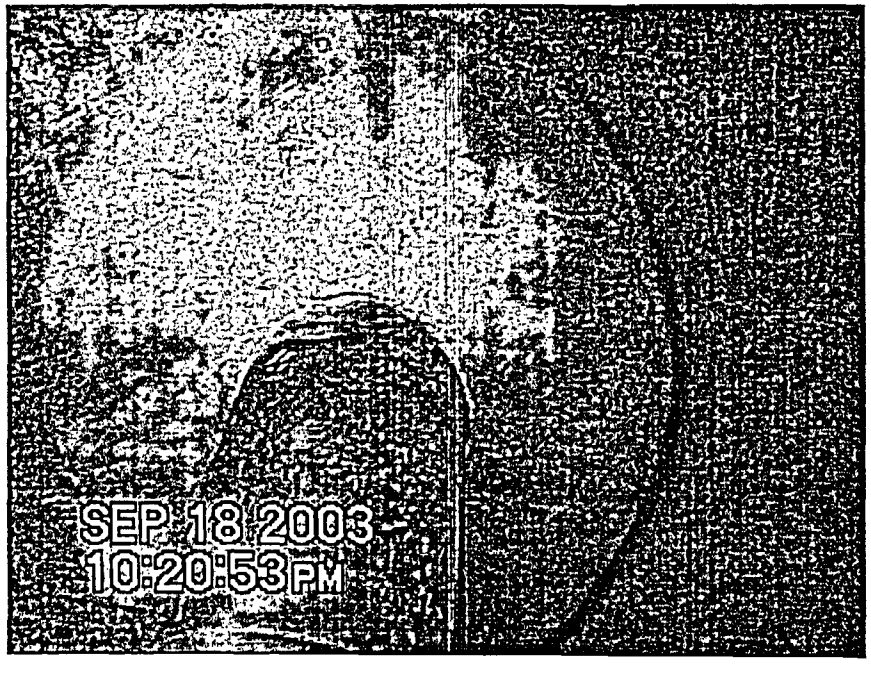

- Results:
  - Carbolene zinc based paint on bottom head and weld pad was in good condition
  - No leakage through nozzle penetrations
  - No indication of boric acid or boric acid buildup from operational leakage
  - Cleaning performed to facilitate future inspections

"B" Sump

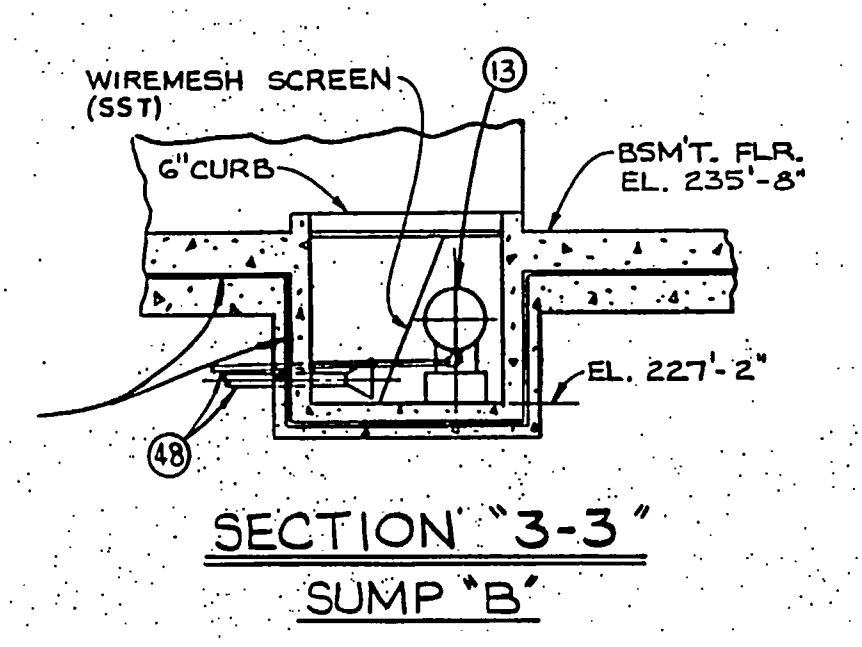

- Committed to inspect per NRC Bulletin 2003-01

- Inspection raised 3 issues:
  - Sump screen mesh per UFSAR should filter debris > 0.25" in diameter. Installed mesh size is 3/16" x 9/16".
  - Bypass flow issue
  - Foreign material found

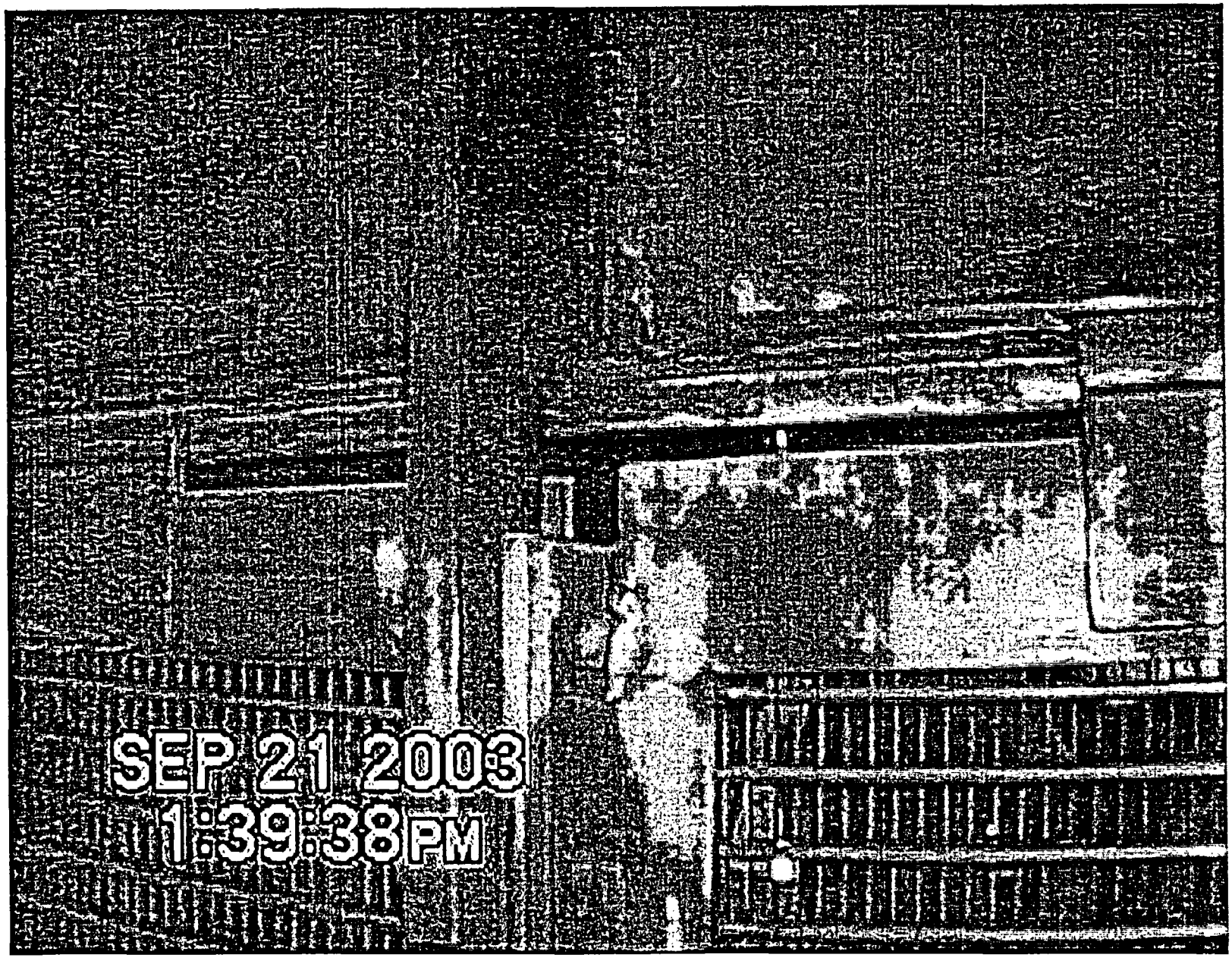
SEP 21 2003
1:39:38PM

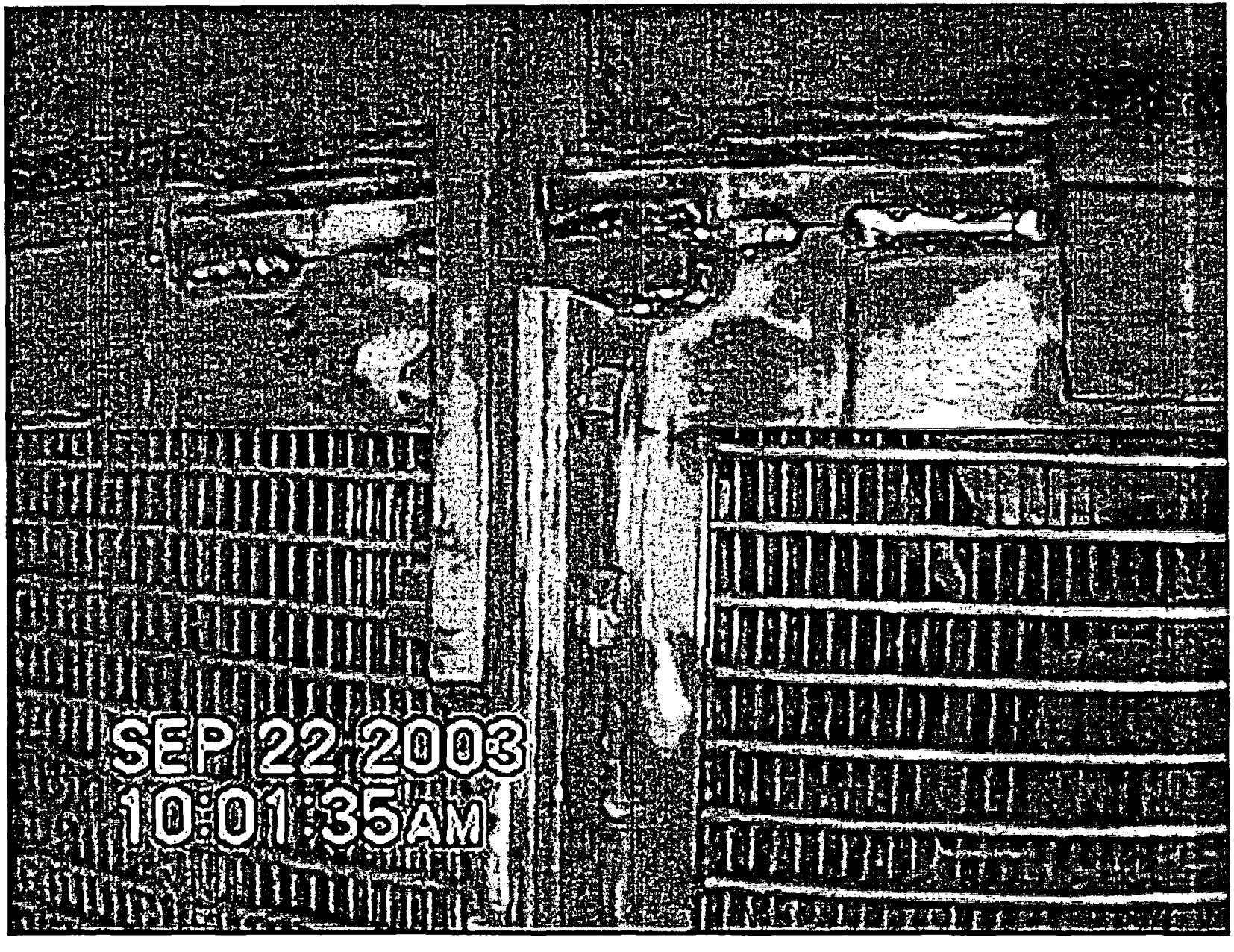
SEP 22 2003
10:01:35AM

LRA PREPARATIONS/RESULTS

- Primarily In-house Matrixed Staff with Specialty Contractors
- LRA prepared following guidance of NEI 95-10 in SRP format (3rd plant)
- Many Additional Material/Environment Combinations not in Gall (3.X-2 Tables)
- Interim Staff Guidance Addressed in LRA
- Scoping Open Items

SELECTED TLAAs

- **Pressurized Thermal Shock - RV**

Table 4.2-1 Values of RT_{PTS} at EOL - Ginna RPV Beltline Materials

Material	Heat Number	Inner Surface Fluence E19 n/cm²	Initial RT_{NDT} °F	Margin °F	Chemistry Factor °F	Inside Surface Fluence Factor	RT_{NDT} °F	RT_{PTS} °F
Intermediate Shell	125S255VA1	4.85	20	34[1]	44[1]	1.396	61.4	115.4
Lower Shell	125P666VA1	4.85	40	34[1]	31[1]	1.396	43.3	117.3
Circumferential Weld	61782/ SA-847	5.01	-4.8	48.3[2]	161.9[2]	1.403	227.1	270.6

[1] Regulatory Guide 1.99, Rev. 2, Position 1.1
[2] Regulatory Guide 1.99, Rev. 2, Position 2.1

The RT_{PTS} values for the intermediate and lower shell forgings remain below the NRC screening criterion of 270° F and the RT_{PTS} value for the beltline circumferential weld (SA-847) remains below the NRC screening criterion of 300° F at EOL.

Fracture Toughness - RV

- Equivalent margins analysis for limiting beltline weld showed substantial margin per ASME Section XI, App. K for ductile flaw extension and tensile stability.

RCS Fatigue Calculation Results (60 years)

Components:	CUF (with maximum Fen)
– RV Shell and Lower Head Region	0
– RV Inlet and Outlet Nozzles	0.3922
– SI Nozzle to Cold Leg	0.2517
– RHR-to-SI Tee	0.1428
– Charging Nozzle (200 events)	0.338
– Pressurizer Heater Penetration	0.74
– Pressurizer Surge Nozzle	9.633E-06
– RCS Hot Leg Surge Nozzle	0.2022

PROGRAMS

Total - 33
Consistent with Gall - 20
Plant - Specific - 3
Consistent with Exceptions - 10
New Programs Generated - 4
Enhanced Programs - 6

COMMITMENTS

- 29 High Level Commitments in Draft SER
- 122 Individual Commitments
- All Included in Commitment/Action Tracking System and Assigned to Plant Staff
- LRA Program to Configuration Management Process Being Developed

R.E. GINNA NUCLEAR POWER PLANT

License Renewal SER
with Open Items

Staff Presentation to the ACRS
RUSSELL ARRIGHI
Project Manager
November 4, 2003

Overview

- **RG&E submitted its application for Ginna by letter dated July 30, 2002**
- **Westinghouse pressurized water reactor, two loop close cycle, generate 1520 megawatt thermal, and 490 megawatt electrical.**
- **Systematic Evaluation Program Plant**
- **Plant located on Lake Ontario in the town of Ontario, Wayne County, New York.**

Overview (continued)

- Current license expires September 18, 2009
- Request license renewal through September 18, 2029
- Application implemented the generic aging lessons learned (GALL) process

NRC Review Process

- 8 Open Items (4 resolved)
- 7 Confirmatory Items
- Brought into scope and subjected to AMR
  - 0 new structures
  - several new components
- 1 new AMP

NRC Audits and Inspections

- Scoping and Screening Methodology Audit
  - December 9 - 13, 2002
- Scoping and Screening Inspection
  - June 23 - 27, 2003
- Aging Management Program Audit
  - June 23 - 25, 2003
- Aging Management Review Inspection
  - July 21 -25 and August 4 -8, 2003

Section 2 – Structures and Components Subject to an Aging Management Review

- 2.1 - SCOPING AND SCREENING METHODOLOGY
- Describes methodology used to identify SSCs that are within the scope of the license renewal rule and subject to an AMR
- Staff audit determined that the applicant's methodology satisfies the rule

Section 2.2 – Plant Level Scoping Results

- Staff reviewed section 2.2 to determine if any systems, structures or commodities supposed to be within scope were omitted
- No Open or Confirmatory Items

Section 2.3 Scoping and Screening of Mechanical Systems

- Includes:
  - Reactor systems
  - Engineered safety features systems
  - Auxiliary systems
  - Steam power conversion systems

3 Open and 3 Confirmatory Items (2 Resolved)

Section 2.3 Scoping and Screening of Mechanical Systems (Continued)

- SSCs initially omitted from scope. These SSCs met scoping criterion 54.4(a)(2)
  - Steam heating boiler and associated components
  - CCW piping
  - Spent fuel pool make-up path
- These systems were brought into scope, along with associated aging management information

Open Items

- Open Item 2.3.3.2 -1 (Resolved)
  - Staff identified that failure of out-of-scope CCW piping could result in the failure of the CCW system and thus the ability to cool down the plant following an accident, and therefore should be in scope of the rule.
  - All CCW piping is now included in scope and Open Item is resolved.

Open Items (continued)

- Open Item 2.3.3.3 -1 (Resolved)
  - Staff identified that the spent fuel pool makeup source was not in scope. The loss of spent fuel pool inventory could result in the inability to maintain level and temperature, and therefore should be included in scope of the rule.
  - The primary make-up flow path (RWST) was brought into scope and Open Item is resolved.

Open Items (continued)

- Open Item 2.3.3.6 -1
  - Staff identified that the fire service water booster pump (jockey pump) was not in scope. Loss of booster pump could result in loss of fire water header pressure and cycling of fire pump resulting in damage, and therefore should be included in scope of the rule.

Confirmatory Items

- Confirmatory Item 2.3.3.2 -1
  - Staff identified that the make-up to the CCW surge tank was not in scope. Damage to pressure boundary could affect the ability to mitigate an accident, and therefore should be in scope of license renewal.
  - Makeup flow path was initially brought into scope. Need associated aging management information.

SECTION 2.4 STRUCTURES AND STRUCTURAL COMPONENTS

- Describes structures and structural components
  - Containment
  - Other structures (13)
- No Open or Confirmatory Items

SECTION 2.5 - ELECTRICAL SYSTEMS, INSTRUMENTATION, & CONTROL SYSTEMS

- These components were evaluated on a plant-wide basis utilizing the "spaces" approach
  - 8 commodity groups
  - One Open Item

Open Item

- Open Item 2.5-1
  - Staff identified that two cables from the offsite power path that brings power into the safety buses were not in scope that could affect the ability to bring the plant to a safe shutdown condition, and therefore should be in scope of the rule.

SCOPING AND SCREENING SUMMARY

- The applicant's methodology meets the requirements of the rule.
- Scoping and screening results included all SSCs within the scope of license renewal and subject to an AMR.

LICENSE RENEWAL INSPECTIONS

- Highlights:
  - Scoping and Screening Inspection
  - AMR Inspection
  - Plant ROP

License Renewal Inspection Program Implementation

- License renewal manual chapter - MC 2516
- License renewal inspection procedure - IP 71002
- Site-specific inspection plan for each applicant
- Scheduled to support NRR's review
- Resources - regional inspection personnel

License Renewal Inspections

- *SCOPING AND SCREENING INSPECTION*
- Objective: to confirm that the applicant has included all appropriate SSCs in the scope of license renewal as required by the rule.
- One week in length
- Conducted June 23 – 27, 2003 at the Ginna site
- Concluded that scoping and screening process was successful in identifying those SSCs needing aging management review

SCOPING & SCREENING INSPECTION (Continued)

- **Inspection Results**
  - Inconsistent component identification between the fire protection program and the fire protection aging management program.

AGING MANAGEMENT INSPECTION

- **OBJECTIVE: to confirm that existing AMPs are managing current age related degradation**
- **Two weeks in length**
- **Conducted July 21- 25 and August 4 - 8, 2003**
- **Material condition of plant was being adequately maintained and has improved over time.**
- **Documentation was of very good quality supportedby a comprehensive computer database.**
- **Third (optional) inspection – Not required**

Ginna
2Q/2003 PERFORMANCE SUMMARY

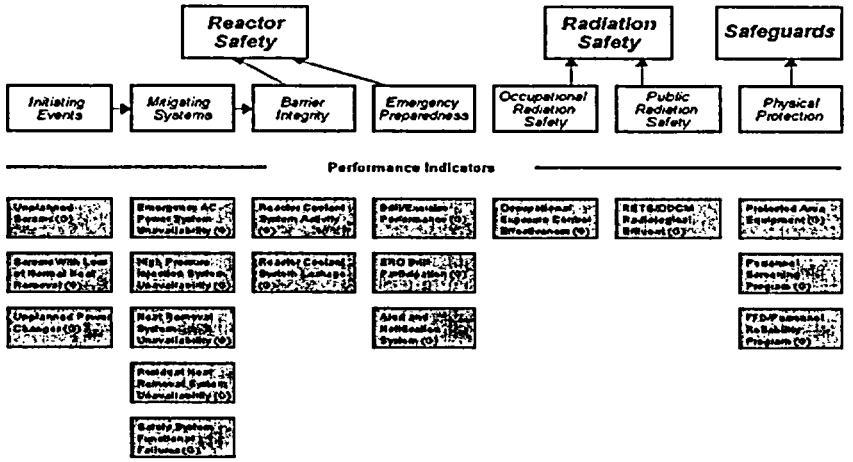

Last Modified: July 22, 2003

SECTION 3 - AGING MANAGEMENT REVIEW

- GALL divides systems and structures into 6 broad system/structural groups
- Reactor systems (3.1)
- Engineered safety features systems (3.2)
- Auxiliary systems (3.3)
- Steam and power conversion systems (3.4)
- Containments, structures and component supports (3.5)
- Electrical and instrumentation and controls (3.6)

November 4, 2003 24

AGING MANAGEMENT PROGRAMS

- 11 common aging management programs
- 22 system/structural group-specific AMPs
  - Consistent with GALL: 20
  - Consistent w/GALL, with some deviation: 10
  - Non-GALL: 3
- 1 AMP added – system specific
- 2 Open Items (1 Resolved)

GINNA AMP AUDIT

- Date of audit – June 23 - 25, 2003
- Auditors - 5 project managers from license renewal
- Audited all the attributes of the AMPs claimed to be consistent with GALL
- Concluded AMPs were consistent with GALL except:
  - Fire Protection Program
  - Fire Water System Program
  - These AMPs were revised and resubmitted to technical staff for review - Staff found them acceptable

SECTION 3.1 - REACTOR SYSTEMS

- Reactor coolant (class 1)
- Reactor vessel
- Reactor vessel internals
- Pressurizer
- Steam generators
- Reactor coolant (non class 1)

- Two Open Items (1 Resolved)

Reactor Vessel Surveillance Program

- Open item B2.1.28-1 (Resolved)
  - Staff identified that the applicant is not planning on testing the reactor vessel surveillance capsule after it receives a fast neutron fluence equivalent to the 60-year fluence.
  - Commitment to test capsule; Open Item is resolved

Thimble Tube Inspection Program

- **Open item B2.1.36-1**
  - **Staff identified that several of the program attributes needed further clarification.**

ALLOY 600

Reactor vessel head, CRDMs, & CRDM penetrations replaced during the September 2003 refueling outage

Replacement head was fabricated with Alloy 690TT (thermally treated) penetrations. The penetrations are welded with partial penetration J-groove Alloy 52 welds.

No Alloy 82/182 welds in RCS piping – is forged stainless steel

Alloy 600 components: BMI penetrations, radial core support pads

Reactor Vessel Internals Program

- Commitment by applicant to submit the reactor vessel internals program to the staff for review and approval.
- The commitment will permit the staff to review the AMP for acceptability against NRC requirements as well as those inspection activities recommended by the EPRI-MRP.

SECTION 3.2 - ENGINEERED SAFETY FEATURES SYSTEMS

SECTION 3.3 - AUXILIARY SYSTEMS

SECTION 3.4 - STEAM AND POWER CONVERSION SYSTEMS

- One Confirmatory Item

SECTION 3.5 - CONTAINMENT, STRUCTURES, AND COMPONENT SUPPORTS

- Containment structure
- 13 other structures
- No Open or Confirmatory Items

AGING MANAGEMENT OF IN-SCOPE INACCESSIBLE CONCRETE

	Aggressive Limit	Ginna
pH	< 5.5	7
Chlorides	> 500 ppm	6 – 8 ppm
Sulfates	> 1500 ppm	20 – 40 ppm

- Periodic testing to verify chemistry remains non-aggressive
- Below grade soil/water environment non-aggressive

SECTION 3.6 – Electrical & I&C

- 8 Component commodity groups subject to AMR
  - Bus ducts
  - Insulated cables and connections
  - Etc.
- 1 Open & 1 Confirmatory Item (Resolved)
- One AMP added for Electrical Cables not Subject to EQ Used in Instrumentation Circuits

SECTION 4 - TIME-LIMITED AGING ANALYSES

- REACTOR VESSEL NEUTRON EMBRITTLEMENT
- METAL FATIGUE
- ENVIRONMENTAL QUALIFICATION OF ELECTRICAL EQUIPMENT

TLAA (CONT)

- CONCRETE CONTAINMENT TENDON PRESTRESS
- CONTAINMENT LINER PLATE AND PENETRATION FATIGUE
- OTHER PLANT-SPECIFIC TLAAs

SECTION 4.2 - REACTOR VESSEL NEUTRON EMBRITTLEMENT

Three analysis affected by irradiation embrittlement identified as TLAAs.

1. Reactor Vessel Upper-Shelf Energy
2. Pressurized Thermal Shock
3. Pressure/Temperature Curves

REACTOR VESSEL UPPER SHELF ENERGY (USE)

Reactor Vessel Upper Shelf Energy (USE)	Screening Criteria (FT-LBS)	Ginna (FT-LBS)
Beltline Welds	50	< 50

- RV has margins of safety against fracture equivalent to those required by Appendix G, Section XI of the ASME Code; therefore acceptable.
- Licensee's analysis satisfies ASME code for 54 effective full-power years (EFPY) (60 years at 90% capacity factor)

PRESSURIZED THERMAL SHOCK

Beltline Welds	RT_{PTS} Criterion, °F	Calculated RT_{PTS}, °F
SA - 847	≤300	271

- Materials provide adequate protection against PTS events if reference temperature (RT_{PTS}) are within limits
- Open Item: Applicant is to provide surveillance data, detailed calculations from the surveillance data, and the analysis of the surveillance data

Plant Heatup/Cooldown (Pressure/Temperature) Curves

- Current analyses valid for 28 EFPY
- Technical specifications will be updated as required by Appendices G and H of 10 CFR 50

SECTION 4.3 METAL FATIGUE

- Reactor coolant system components at Ginna designed to Class 1 of the ASME Code
- All components have projected CUF <1.0 for period of extended operations
- 2 Confirmatory Items

CUF = Cumulative Usage Factor

SECTION 4.4 - ENVIRONMENTAL QUALIFICATION

- Applicant has adequately identified the TLAA for EQ components
- Applicant's EQ Program consistent with GALL
- Staff concluded EQ Program will continue to manage equipment in accordance with 10 CFR 50.49, and meets 10 CFR 54.21(c)(1)(i), (ii) and (iii)
- No Open or Confirmatory Items

SECTION 4.5 - CONCRETE CONTAINMENT TENDON PRESTRESS

- Prestress losses estimated for 40 and 60 years
- Applicant provided Trending Analysis
- Staff considers the applicant's actions adequate during period of extended operation
- No Open or Confirmatory Items

4.6 - CONTAINMENT LINER PLATE AND PENETRATION FATIGUE

- Staff finds design transients and corresponding cycles acceptable
- Staff concludes that the TLAA has been projected to the end of period of extended operation
- No Open or Confirmatory Items

SECTION 4.7 Other Plant-Specific TLAA

- Containment Liner Stress
- Containment Tendon Fatigue
- Containment Liner Anchorage Fatigue
- Containment Tendon Bellow Fatigue
- Crane Cycle Load Limits
- Reactor Coolant Pump Flywheel
- Thermal Aging of Cast Austenitic Stainless Steel

- All demonstrate the TLAA have been projected to the end of the period of extended operation
- No Open or Confirmatory Items