Tennessee Valley Authority, Post Office Box 2000, Spring City, Tennessee 37381-2000

WBN-TS-03-12

NOV 2 1 2003

10 CFR 50.90

U.S. Nuclear Regulatory Commission
ATTN: Document Control Desk
Washington, D. C. 20555

In the Matter of the)
Tennessee Valley Authority)

Docket No. 50-390

WATTS BAR NUCLEAR PLANT (WBN) – LICENSE AMENDMENT (WBN-TS-03-12) MONITORING OF CONTROL OR SHUTDOWN ROD POSITION BY AN ALTERNATE MEANS

Pursuant to 10 CFR 50.90, TVA is submitting a request for an Operating License change (WBN-TS-03-12) to license NPF-90 for WBN Unit 1. The Required Actions of Condition A of Technical Specification (TS) 3.1.8, "Rod Position Indication (RPI)," require the verification of rod position by use of the moveable incore detectors. TVA is proposing a revision to TS 3.1.8 to allow the position of the control and shutdown rods to be monitored by a means other than the moveable incore detectors.

The amendment will provide a less burdensome monitoring method should future problems with the RPI System be experienced. When a recurring problem in the system requires the monitoring of a rod's position by the alternate means, TVA plans to continue unit operation and to use the alternate means until the unit enters Mode 5 and repairs to the system can safely be implemented.

Provided in Enclosure 1 is a complete description and justification of the proposed amendment. Enclosure 2 provides a brief description of the RPI system. This description is provided because the RPI system was modified in a recent refueling outage and the Updated Final Safety Analysis Report (UFSAR) has not yet been revised to reflect the new design. An annotated version of TS 3.1.8 and the Bases is provided in Enclosure 3.

A001

Currently there is no specific date or milestone by which approval of this amendment is required. However, should a problem with an RPI occur, approval of the amendment may need to be expedited. TVA plans to implement the revised TS within 30 days of NRC approval if there are no equipment problems requiring immediate implementation of the change.

TVA has determined that there are no significant hazards considerations associated with the proposed change and that the TS change qualifies for a categorical exclusion from environmental review pursuant to the provisions of 10 CFR 51.22(c)(9). Additionally, in accordance with 10 CFR 50.91(b)(1), a copy of this proposed license amendment is being forwarded to the state designee for the State of Tennessee.

There are no regulatory commitments in this submittal. If you have any questions about this request, please contact me at (423) 365-1824.

I declare under penalty of perjury that the foregoing is true and correct.
Executed on this 21st day of November, 2003.

Sincerely,

P. L. Pace
Manager, Site Licensing
and Industry Affairs

Enclosures:

1. TVA's Evaluation of the Proposed Change
2. Summary Description of Design Change Notice (DCN) 51072
3. Annotated Technical Specifications and Bases

cc: See page 3

PLP:JLB
Enclosures
cc (Enclosures):

NRC Resident Inspector
Watts Bar Nuclear Plant
1260 Nuclear Plant Road
Spring City, Tennessee 37381

Ms. M. H. Chernoff, Project Manager
U.S. Nuclear Regulatory Commission
MS 08G9
One White Flint North
11555 Rockville Pike
Rockville, Maryland 20852-2738

U.S. Nuclear Regulatory Commission
Region II
Sam Nunn Atlanta Federal Center
61 Forsyth St., SW, Suite 23T85
Atlanta, Georgia 30303

Mr. Lawrence E. Nanny, Director
Division of Radiological Health
3rd Floor
L & C Annex
401 Church Street
Nashville, Tennessee 37243

ENCLOSURE 1

TENNESSEE VALLEY AUTHORITY
WATTS BAR NUCLEAR PLANT (WBN)
UNIT 1
DOCKET NUMBER 390

PROPOSED LICENSE AMENDMENT REQUEST WBN-TS-03-12

DESCRIPTION AND EVALUATION OF THE PROPOSED CHANGE

1.0 DESCRIPTION

This letter proposes a revision to Technical Specification (TS) 3.1.8, "Rod Position Indication (RPI)." The Required Action of Condition A of TS 3.1.8 requires the verification of rod position by use of the moveable incore detectors. This amendment request proposes a revision to TS 3.1.8 to allow the position of the rod to be monitored by a means other than the moveable incore detectors. For a situation where an RPI problem exists, TVA plans to monitor the test point voltage of the stationary gripper coil of the affected control rod drive mechanism. Monitoring the position of the rod in this manner will allow for historical data retrieval and will also allow the use of the existing rod deviation alarm.

The proposed amendment will provide a less burdensome alternative should future problems with the Analog Rod Position Indication (ARPI) System be experienced. When a problem in the system requires the monitoring of a rod's position by the alternate means, TVA plans to use the alternate means until the unit enters Mode 5 and repairs to the system can be safely implemented. TVA considers this alternative to be a better monitoring method than to use the movable incore detectors every 8 hours for an extended period to comply with the Required Action of Condition A of TS 3.1.8. Compliance in this manner could result in excessive wear on the incore system.

2.0 PROPOSED CHANGE

2.1 Proposed Changes to TS 3.1.8, "Rod Position Indication"

TVA proposes to revise the actions for Condition A of TS 3.1.8 as indicated below. The text added by the proposed revision is shown as italicized print and the deletions are shown as a strikethrough:

CONDITION	REQUIRED ACTION	COMPLETION TIME
A. One ARPI per group inoperable for one or more groups.	A.1 Verify the position of the rods with inoperable position indicators by using movable incore detectors.	Once per 8 hours
	OR	
	A.2.1 ***Verify the position of the rods with inoperable position indicators by using movable incore detectors.***	***8 hours*** ***AND*** ***Once every 31 days thereafter*** ***AND*** ***8 hours, if stationary gripper coil parameters indicate movement***
	AND	
	A.2.2 ***Review the parameters of the stationary gripper coil for indications of unintended rod movement for the rods with inoperable position indicators.***	***16 hours*** ***AND*** ***Once per 12 hours thereafter***
	OR	
	A.~~2~~ *3* Reduce THERMAL POWER to ≤ 50% RTP.	8 hours

2.2 Proposed Changes to the Bases for TS 3.1.8

TVA proposes to revise the Bases for Condition A of TS 3.1.8 as indicated below. The text added by the proposed revision is shown as italicized print and the deletions are shown as a strikethrough:

A.2.1, A.2.2

Required Action A.2.1 and Action A.1 are essentially the same. Therefore, the discussion provided above for Action A.1 applies to Action A.2.1. The options provided by Actions A.2.1 and A.2.2 allow for continued operation in a situation where the component causing the ARPI to be inoperable is inaccessible due to operating conditions (adverse radiological or temperature environment). In this situation, repair of the ARPI cannot occur until the unit is in an operating MODE that allows safe access to the failed components.

In addition to the initial 8 hour verification, Action A.2.1 also requires the following for the rod with the failed ARPI:

1. ***Verification of the position of the rod every 31 days using the incore movable detectors.***

2. ***Verification of the position of the rod using the incore movable detectors within 8 hours of the performance of Action A.2.2 whenever there is an indication of possible rod movement based on the parameters of the stationary gripper coil.***

Action A.2.2 is in lieu of the verification of the position of the rod using the incore movable detectors every 8 hours as required by Action A.1. This action alleviates the potential for excessive wear on the incore system due to the repeated use of the incore detectors. Once the position of the rod with the failed ARPI is confirmed through the use of the moveable incore detectors in accordance with Action A.2.1, the parameters of the stationary gripper coil must be monitored until the failed ARPI is repaired. Should the review of the stationary gripper coil parameters indicate the unintended movement of the rod, the position of the rod must be verified within 8 hours in accordance with Action A.2.1.

A.*3* ~~2~~

Reduction of THERMAL POWER to ≤ 50% RTP puts the core into a condition where rod position is not significantly affecting core peaking factors (Ref. 13). The allowed Completion Time of 8 hours is reasonable, based on operating experience, for reducing power to ≤ 50% RTP from full power conditions without challenging plant systems and allowing for rod position determination by Required Action A.1 above. ***Consistent with LCO 3.0.4 and this action, unit startup and operation to ≤ 50% RTP may occur with one ARPI per group inoperable.***

3.0 BACKGROUND

TS 3.1.8 ensures the rod position indicators are capable of determining the position of the control or shutdown rods. Mechanical or electrical failures may cause a rod to become inoperable or to become misaligned from its group. Rod inoperability or misalignment may cause increased power peaking, due to the asymmetric reactivity distribution and a reduction in the total available rod worth for reactor shutdown. Therefore, rod alignment and operability are related to core operation in design power peaking limits and the core design requirement of a minimum shutdown margin.

The axial position of shutdown rods and control rods are determined by two separate and independent systems:

- The Bank Demand Position Indication (BDPI) System (commonly called group step counters).

- The Analog Rod Position Indication (ARPI) System.

The BDPI System counts the pulses from the Rod Control System that moves the rods. There is one step counter for each group of rods. Individual rods in a group all receive the same signal to move and should, therefore, all be at the same position indicated by the group step counter for that group. The BDPI System is considered highly precise (± 1 step or ± 5/8 inch).

The ARPI System provides an accurate indication of actual rod position, but at a lower precision than the step counters. This system is based on inductive analog signals from a series of coils spaced along a hollow tube with a center to center distance of 3.75 inches, which is 6 steps. The normal indication accuracy of the ARPI System is ± 6 steps (± 3.75 inches), and the maximum uncertainty is ± 12 steps (± 7.5 inches). With an indicated deviation of 12 steps between the group step counter and ARPI, the maximum deviation between actual rod position and the demand position could be 24 steps, or 15 inches.

Operators utilize the ARPI to monitor the position of the rods to establish the plant is operating within the bounds of the accident analysis assumptions. Power peaking, ejected rod worth, or shutdown margin limits may be violated in the event of an accident with the rods operating outside of their limits. Addition information on the design and operation of the ARPI System is provided in the following sections of the Updated Final Safety Analysis Report (UFSAR):

- 4.0, "Reactor"
- 7.7, "Control Systems"
- 15.0, "Accident Analyses"

Provided below is a simplified diagram (Figure 1) of key components in the ARPI system:

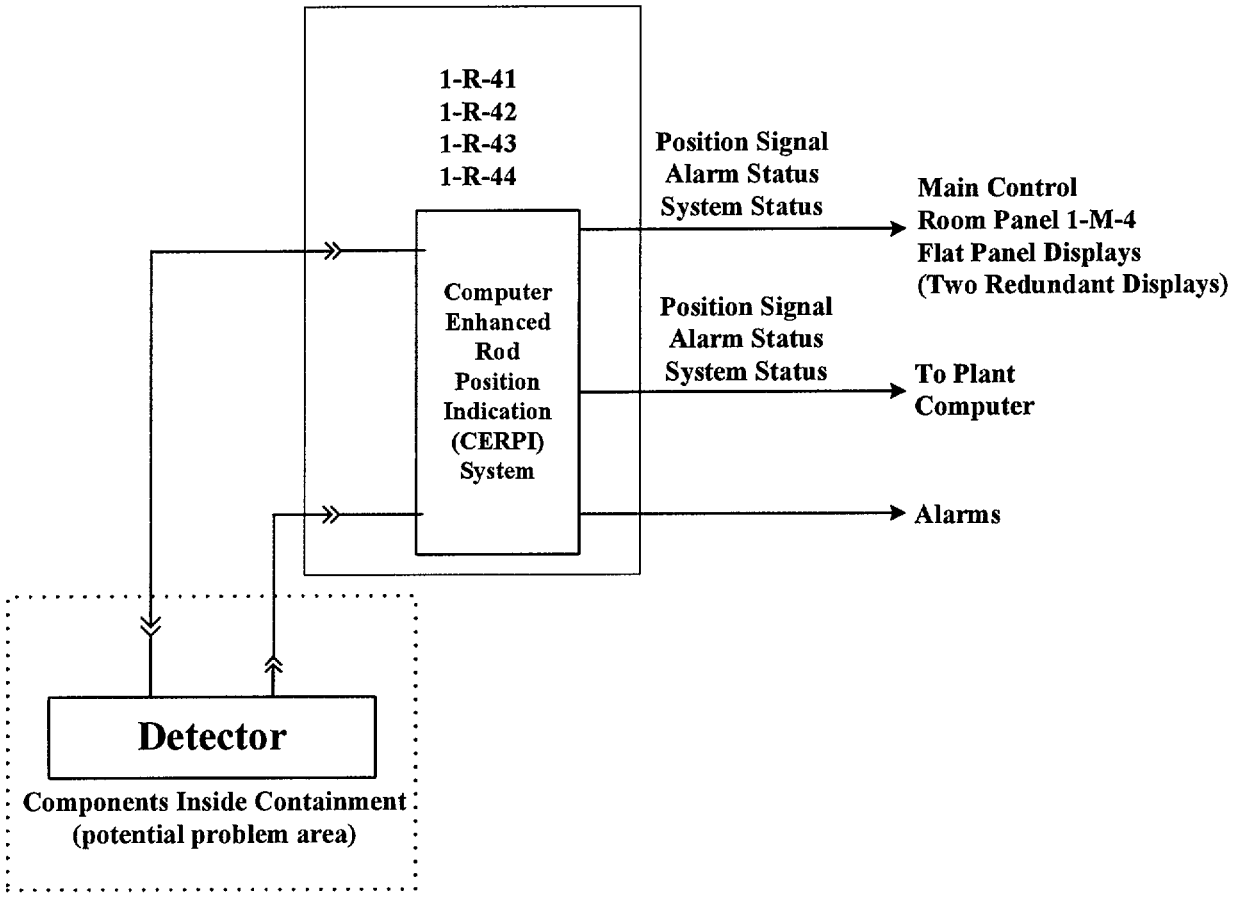

Figure 1 – Potential Problem Area Inside Containment

Design Change Notice (DCN) 51072 was implemented during the Cycle 5 refueling outage and upgraded the existing ARPI system. Portions of the previous system were replaced with a system provided by Westinghouse called the Computer Enhanced Rod Position Indication (CERPI) System (refer Enclosure 2 for additional information).

Should a technical problem with ARPI components inside containment arise, no further action can be taken to address the problem as long as Unit 1 is operating. This is due to the adverse radiological and temperature environment that exist in the reactor head area prior to entering Mode 5, Cold Shutdown. Further complicating the repair is the requirement that the Control Rod Drive Mechanism (CRDM) ventilation be operated when the hot leg temperatures are above 180 degrees F. Accessing the reactor head area with the CRDM ventilation operating is dangerous.

In addition, an ARPI coil stack may have to be lifted by a crane to allow access to the connectors. For this to occur the missile shield must be removed and this cannot be performed until the unit was in Mode 5. Shutdown of the unit to Mode 5 just to implement the needed repairs is considered inappropriate since other options for the monitoring of the status of the rod are available.

TVA considers the proposed monitoring of the status of the stationary gripper coil to be a valid means of monitoring the position of a rod once the position is confirmed through the use of the moveable incore detectors. TVA plans to monitor the stationary gripper coil until the unit enters Mode 5 and repairs to the system can be safely implemented. The monitoring of the position in this manner also has an added benefit in that it will alleviate a concern regarding the potential for excessive wear of the incore system due to the use of the incore detectors every 8 hours to comply with Required Action A.1 of TS 3.1.8. TVA's concern with the continuous use of the moveable incore detectors is similar to concerns expressed in amendments approved for two other utilities. Florida Power & Light Company (FPL) submitted a similar amendment request on July 29, 2002. Carolina Power and Light Company (CPL) submitted a request on January 16, 2003. The FPL amendment was approved on August 20, 2002, and the CPL amendment was approved on February 13, 2003.

4.0 TECHNICAL ANALYSIS

In order to assess the proposed changes to TS 3.1.8, "Rod Position Indication (RPI)," the following discussion contains three key elements.

1. Operational Events Impacted by Rod Drop or Rod Misalignment

A. <u>Rod Drop or Rod Misalignment during Power Operation</u>

A full rod drop of a control or shutdown rod will be immediately detectable by means other than the position indication system. Independent indication of a dropped rod is obtained by using the excore power range signals. This rod drop detection circuit is actuated upon sensing a rapid decrease in flux and is designed such that normal load variations do not cause it to be actuated. Furthermore, a negative reactivity insertion corresponding to the reactivity worth of a full rod drop will cause a noticeable change in core parameters including core average temperature and axial flux depending on the relative worth and core location.

A rod misalignment may also be detectable by other means such as axial flux deviation or a channel deviation alarm. Based on these factors, operator actions will be initiated which are not dependent on the status of the individual rod position indication system. Considering the preceding, the increase in the likelihood of an undetected rod drop or misalignment is considered to be negligible while the alternate monitoring is used in conjunction with the other available rod drop/misalignment parameter indications.

B. Rod Drop or Misalignment during Reactor Startup

For a situation where there is an unplanned outage that does not result in an entry into Mode 5, TVA plans to use the alternate monitoring. Since the movable incore detectors cannot be used to determine rod position until sometime after entry into Mode 2 when neutron flux becomes adequate, the alternate method will be utilized during a reactor startup to provide initial verification that the affected rod is fully withdrawn. The proposed method would be utilized to verify that the rod is fully withdrawn by monitoring CRDM traces. Rod position verification using this method will permit startup and entry into Mode 2. As a second diverse check, the movable incore detectors will be used to verify rod position when neutron flux becomes adequate. Following verification that the rod is withdrawn, a rod misalignment would be detectable by means other than the rod position indication system, e.g. CRDM trace monitoring, axial flux deviation, channel deviation alarm, and the required operator actions would therefore not be dependent on the status of the individual rod position indication.

The increase in the likelihood of an undetected rod drop or misalignment is therefore considered to be negligible.

C. Reactor Trip

Following a reactor trip, the position indication system is used to verify that all rods have fully inserted. Emergency boration is required if more than one rod fails to fully insert. The inoperability of the position indication system will prevent verification of the insertion of a rod during a reactor trip. Administrative controls will be used to heighten reactor operator awareness that a rod position indication problem exists. This will ensure that emergency boration is initiated as required if a rod other than the rod with the inoperable position indicator does not fully insert.

2. Adequacy of the Proposed Monitoring

Compliance with either Required Action A.1 or the proposed Required Action A.2.1 will result in the verification of the position of the affected rod within eight hours by use of the moveable incore detectors. Based on available information, the monitoring of the stationary gripper coil of the Control Rod Drive Mechanism (CRDM) on the non-indicating rod as defined in proposed Required Action A.2.2 will be initiated.

TVA plans to utilize the plant computer to monitor the stationary gripper coil voltage. Monitoring the inoperable ARPI in this manner will allow for historical data retrieval and will also allow the use of the existing rod deviation alarm. The "Rod at Bottom" status light and the "Rods at Bottom" annunciator for the affected control rod may be disabled. A simplified schematic of the monitoring circuit is provided below in Figure 2:

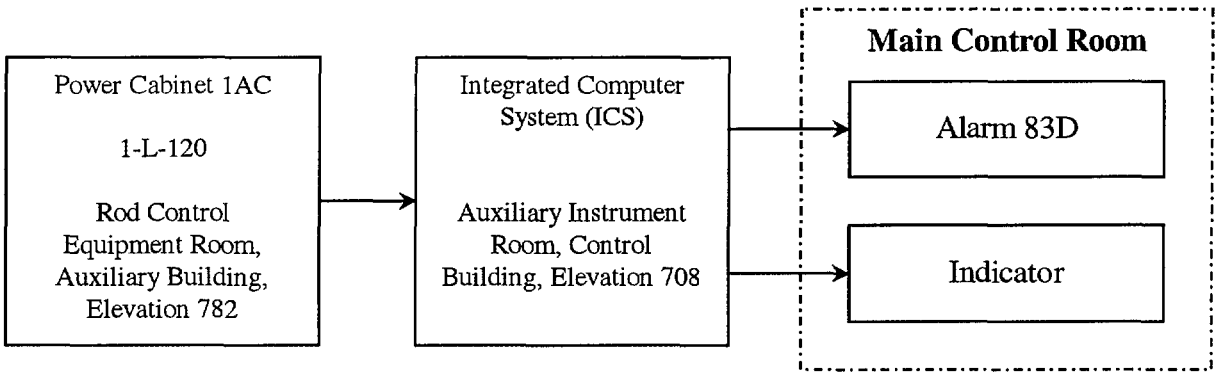

Figure 2 – Proposed Monitoring of Stationary Gripper Coil

Since the monitoring will be performed by Operations, TVA proposes to continue the monitoring to determine if the coil has changed state on a once-per-shift basis or once every 12 hours. This is consistent with the 12 hour frequency of Surveillance Requirement (SR) 3.1.5.1 for the verification that the positions of the rods are within the alignment limits. Should the parameters of the coil of the monitored rod indicate unintended movement, a determination of the position of the rod will be made using the movable incore detectors. The position of the monitored rod will be established using the movable incore system at least once every 31 days in accordance with proposed action A.2.1.

The proposed monitoring of stationary gripper coil parameters provides a reasonably similar approach to rod position monitoring as that provided by the movable incore detector system. In particular, the ability to immediately detect a rod drop or misalignment is not directly provided by the movable incore detector system or by the monitoring of stationary gripper coil parameters. Additionally, neither the movable incore detector system, nor the monitoring of stationary gripper coil parameters, provides the capability to verify rod position following a reactor trip or shutdown. Therefore, the monitoring of stationary gripper coil parameters, in lieu of the use of the movable incore detector system, provides an equivalent and acceptable method of monitoring rod position while a position indicator is inoperable and after the initial position is established through use of the movable incore detector system.

3. Potential Impact from Repeated Use of the Moveable Incore Detector System

Based on the preceding information, TVA has concluded that appropriate monitoring of an inoperable ARPI can be achieved without subjecting the movable incore system to repeated use. TVA's concern with the moveable incore detector system is that repeated use of the system could result in:

- A loss of functionality of the system.
- The inability to complete required surveillances.
- A required power reduction and/or shutdown of the unit.

The movable incore detector system is composed of six detector drive units, six 5-path rotary transfer devices, six 10-path rotary transfer devices, and 58 flux thimbles. The 5-path rotary transfer device allows its detector to map its own core locations or another detector's core locations, or to be placed in a shielded storage location. The 10-path rotary transfer device receives the detector from a 5-path device and allows it to access one of up to ten possible core locations. When a flux trace is taken by a detector, the drive unit pushes the detector through its 5-path rotary transfer device to the selected 10-path rotary transfer device and then through the 10-path to the selected core location. The signal obtained from the detector as it moves through the core is proportional to neutron flux distribution in the core. Although estimated fatigue times are not available for this system, it is judged that repetitive use of the movable incore detector system every 8 hours to fulfill TS 3.1.8, Required Action A.1, could lead to failures of the detectors, drive units, and transfer devices.

If a detector fails, then another detector may be used to map its core locations with no loss of data. However, by using another detector to map both its own and the failed detector's core locations, the wear on the second detector is increased. If a drive unit failure causes a detector to become immovable while inserted into a core location, then the ability to obtain data from the core locations associated with the 10-path device the detector is routed through is lost. If a 5-path rotary transfer device fails, then another detector may be used to map its core locations with no loss of data. However, as with a failed detector, this results in increased wear on the second detector. If a 10-path rotary device fails, then the ability to obtain data from the core locations associated with that 10-path device is lost.

Failures within the system may prevent the performance of the current Required Actions A.1 or B.1 of TS 3.1.8. Failure to comply with these actions results in a power reduction to $\leq$ 50% in accordance with TS 3.1.8, Required Actions A.2 or B.2. Failure of the system may also result in the inability to meet the requirements of Technical Requirement (TR) 3.3.3, "Movable Incore Detectors." This will prevent the performance of core peaking factor and power distribution measurements every 31 effective full power days (EFPD) as required by the Surveillance Requirements (SRs) for TS 3.2.1, "Heat Flux Hot Channel Factor ($F_Q(Z)$)," and TS 3.2.2, "Nuclear Enthalpy Rise Hot Channel Factor ($F^N_{\Delta H}$)," (SR 3.2.1.1, SR 3.2.1.2, and SR 3.2.2.1). Additionally the ability to perform monitoring (SR 3.2.4.2) required by TS 3.2.4, "Quadrant Power Tilt Ratio (QPTR)" may be hindered by system failures. Failure to perform these core peaking factor and power distribution surveillances will require a power reduction and shutdown in accordance with the applicable TS Required Actions.

5.0 REGULATORY SAFETY ANALYSIS

5.1 No Significant Hazards Consideration

TVA's letter dated November 21, 2003, proposed a revision to Technical Specification (TS) 3.1.8, "Rod Position Indication (RPI)," for Watts Bar Nuclear Plant (WBN). The TS as currently written requires the use of the moveable incore detector system to determine the position of a shutdown or control rod that has an inoperable position indicator. The proposed amendment outlines an alternate means to monitor the position of the affected rod without subjecting the moveable incore detector system to repeated use.

TVA has evaluated whether or not a significant hazards consideration is involved with the proposed amendment by focusing on the three standards set forth in 10 CFR 50.92, "Issuance of amendment," as discussed below:

1. Will operation of the facility in accordance with this proposed change involve a significant increase in the probability or consequences of an accident previously evaluated?

No. The proposed change provides an alternative method for the monitoring of the position of a rod once the position of the rod is verified using the moveable incore detector system. The proposed monitoring of stationary gripper coil parameters provides a reasonably similar approach to rod position monitoring as that provided by the movable incore detector system. In particular, the ability to immediately detect a rod drop or misalignment is not directly provided by the movable incore detector system or by the monitoring of stationary gripper coil parameters. Additionally, neither the movable incore detector system, nor the monitoring of stationary gripper coil parameters, provides the capability to verify rod position following a reactor trip or shutdown. Therefore, the monitoring of stationary gripper coil parameters, in lieu of the use of the movable incore detector system, provides an equivalent and acceptable method of monitoring rod position while a position indicator is inoperable.

Therefore, operation of the facility in accordance with the proposed amendment would not involve a significant increase in the probability or consequences of an accident previously evaluated.

2. Will operation of the facility in accordance with this proposed change create the possibility of a new or different kind of accident from any accident previously evaluated?

No. As described above, the proposed change provides only an alternative method of monitoring the position of a rod. No new accident initiators are introduced by the proposed alternative manner of performing rod position monitoring. The proposed change does not affect the reactor protection system or the reactor control system. Hence, no new failure modes are created that would cause a new or different kind of accident from any accident previously evaluated.

Therefore, operation of the facility in accordance with the proposed amendment would not create the possibility of a new or different kind of accident from any previously evaluated.

3. Will operation of the facility in accordance with this proposed change involve a significant reduction in a margin of safety?

No. The bases for TS 3.1.8 state that the operability of the rod position indicators is required to determine control rod positions and thereby ensure compliance with the control rod alignment and insertion limits. The proposed change does not alter the requirement to determine rod position but provides an alternative method for monitoring the position of the affected rod after the position of the rod is verified using the moveable incore detector system. As a result, the initial conditions of the accident analysis are preserved and the consequences of previously analyzed accidents are unaffected.

Therefore, operation of the facility in accordance with the proposed amendment would not involve a significant reduction in the margin of safety.

Based on the above, TVA concludes that the proposed amendment presents no significant hazards consideration under the standards set forth in 10 CFR 50.92(c), and, accordingly, a finding of "no significant hazards consideration" is justified.

5.2 Applicable Regulatory Requirements/Criteria

Listed below are the principal sections of the WBN UFSAR that address the ARPI System:

- 4.0, "Reactor"
- 7.7, "Control Systems"
- 15.0, "Accident Analyses"

For these UFSAR sections, the principal review performed by NRC is documented in the Safety Evaluation Report (SER) dated June 1982, NUREG-0847 and in the following Supplements:

Supplement Number	Date of Issuance
2	January 1984
3	January 1985
4	March 1985
5	November 1990
6	April 1991
7	September 1991

Supplement Number	Date of Issuance
8	January 1992
9	June 1992
10	October 1992
11	April 1993
12	October 1993
13	April 1994
14	December 1994
15	June 1995
16	September 1995
18	October 1995

The discussion provided in the SER sections, identified that the following document was considered in NRC's assessment:

- Regulatory Guide 1.77, "Assumptions Used for Evaluating a Control Rod Ejection Accident for Pressurized Water Reactors."

Based on a review of NRC generic issues (Generic Letters and Bulletins) related to rod control or rod position indication, it was identified that WBN responded to the Generic Letter and Bulletin listed below:

- Generic Letter 93-04, "Rod Control System Failure and Withdrawal of Rod Clusters," – TVA's letter dated September 20, 1993.

- Bulletin 96-01, "Control Rod Insertion Problems," - TVA's letter dated April 5, 1996.

Neither of these issues specifically addressed rod position indication problems and therefore, the issues are not considered to impact TVA's proposed license amendment.

In conclusion, based on the considerations discussed above, (1) there is reasonable assurance that the health and safety of the public will not be endangered by operation in the proposed manner, (2) such activities will be conducted in compliance with the Commission's regulations, and (3) the issuance of the amendment will not be inimical to the common defense and security or to the health and safety of the public.

6.0 ENVIRONMENTAL CONSIDERATION

A review has determined that the proposed amendment would change a requirement with respect to installation or use of a facility component located within the restricted area, as defined in 10 CFR 20, or would change an inspection or surveillance requirement. However, the proposed amendment does not involve (i) a significant hazards consideration, (ii) a significant change in the types or significant increase in the amounts of any effluent that may be released offsite, or (iii) a significant increase in individual or cumulative occupational radiation exposure. Accordingly, the proposed amendment meets the eligibility criterion for categorical exclusion set forth in 10 CFR 51.22(c)(9). Therefore, pursuant to 10 CFR 51.22(b), no environmental impact statement or environmental assessment need be prepared in connection with the proposed amendment.

7.0 REFERENCES

1. Letter to NRC from Florida Power & Light Company (FPL) dated July 29, 2002.

2. NRC's letter to FPL dated August 20, 2002.

3. Letter to NRC from Carolina Power and Light Company (CPL) dated January 16, 2003.

4. NRC's letter to CPL dated February 13, 2003.

5. Regulatory Guide 1.77, "Assumptions Used for Evaluating a Control Rod Ejection Accident for Pressurized Water Reactors."

ENCLOSURE 2

TENNESSEE VALLEY AUTHORITY
WATTS BAR NUCLEAR PLANT (WBN)
UNIT 1
DOCKET NUMBER 390

PROPOSED LICENSE AMENDMENT REQUEST WBN-TS-03-12

SUMMARY DESCRIPTION OF DESIGN CHANGE NOTICE (DCN) 51072

The Cycle 5 refueling outage was completed in October 2003. The following information describes a modification that was made during the outage to the Analog Rod Position Indication (ARPI) System. This information is being provided because the Updated Final Safety Analysis Report (UFSAR) has not yet been revised to reflect the new design.

Design Change Notice (DCN) 51072 replaced the ARPI system in Auxiliary Instrument Room panels (racks) 1-R-41, 1-R-42, 1-R-43 and 1-R-44. The previous ARPI system had experienced problems with detector non-linearity, detector steady-state thermal dependence and electro-magnetic coupling to nearby detectors. Reducing or eliminating these problems ensures compliance with the Technical Specification accuracy requirement across the entire operating range.

The analog signal processing equipment associated with the ARPI system in the Auxiliary Instrument Room racks and indicators in the Main Control Room (MCR) were replaced with new up-to-date equipment from Westinghouse Nuclear Automation (WNA). The new Westinghouse system is called the Computer Enhanced Rod Position Indication (CERPI) System. The new CERPI system also replaced the Rod Insertion Limit (RIL) monitoring equipment and the Bank D withdrawal limit equipment in 1-R-25. The only control function performed by the CERPI system is the blocking of automatic rod movement when the Bank D withdrawal limit has been reached. The information previously supplied by the RIL recorder on 1-M-23A is available on the CERPI system; therefore the RIL recorder was deleted.

The existing rod position detectors and associated field cabling will remain intact. The MCR indicators, rod bottom lights and rod speed indicator on MCR panel 1-M-4 were replaced with two redundant LCD flat panel displays. One display can be utilized for the control banks and one for the shutdown banks or all banks can be shown on one monitor. The ARPI processing equipment was upgraded to PLC based controllers and new detector interface boards were installed. The new system includes a maintenance terminal in one of the Auxiliary Instrument Room racks for accessing system diagnostics, ease of maintenance, and calibration access. The new system also includes a Rod Drop Test Computer which captures rod drop times following a reactor trip in addition to the periodic rod drop testing required by plant Technical Specifications.

The new CERPl system MCR monitors display the position of each rod in numeric and/or bar format, rod drop indication, rod insertion limit monitoring information, rod movement demand, rod speed, various rod position alarms and CERPI system trouble alarms. The rod insertion limit monitoring equipment and the Bank D withdrawal limit equipment in 1-R-25 was abandoned in place.

The existing 57 analog inputs for rod position to the Integrated Computer System (ICS) were deleted and a data-link installed to receive data digitally. Inputs from the rod control logic rack 1-R-25 for rod speed and rod demand signals were required by the new system. Additionally, reactor trip signals (Train A and B) from 1-R-58 were required for the CERPI rod drop test computer.

ENCLOSURE 3

TENNESSEE VALLEY AUTHORITY
WATTS BAR NUCLEAR PLANT (WBN)
UNIT 1
DOCKET NUMBER 390

PROPOSED LICENSE AMENDMENT REQUEST WBN-TS-03-12
ANNOTATED TECHNICAL SPECIFICATIONS AND BASES

I. Affected Page List:

3.1-17
3.1-18
3.1-19
B 3.1-52
B 3.1-52a

Note:
For the attached annotated pages, wording additions are shown as bold-italicized text and deletions are shown as strikethrough.

3.1 REACTIVITY CONTROL SYSTEMS

3.1.8 Rod Position Indication

LCO 3.1.8 The Analog Rod Position Indication (ARPI) System and the Demand Position Indication System shall be OPERABLE.

APPLICABILITY: MODES 1 and 2.

ACTIONS

----------NOTE----------
Separate Condition entry is allowed for each inoperable rod position indicator per group and each demand position indicator per bank.

CONDITION	REQUIRED ACTION	COMPLETION TIME
A. One ARPI per group inoperable for one or more groups.	A.1 Verify the position of the rods with inoperable position indicators by using movable incore detectors.	Once per 8 hours
	OR	
	A.2.1 Verify the position of the rods with inoperable position indicators by using movable incore detectors.	***8 hours*** ***AND*** ***Once every 31 days thereafter*** ***AND*** ***8 hours, if stationary gripper coil parameters indicate movement***
	AND	
		(continued)

ACTIONS

CONDITION	REQUIRED ACTION	COMPLETION TIME
A. (continued)	***A.2.2 Review the parameters of the stationary gripper coil for indications of unintended rod movement for the rods with inoperable position indicators.***	***16 hours***
	AND	
		Once per 12 hours thereafter
	OR	
	A.***3*** ~~2~~ Reduce THERMAL POWER to ≤ 50% RTP.	8 hours
B. One or more rods with inoperable position indicators have been moved in excess of 24 steps in one direction since the last determination of the rod's position.	B.1 Verify the position of the rods with inoperable position indicators by using movable incore detectors.	4 hours
	OR	
	B.2 Reduce THERMAL POWER to ≤ 50% RTP.	8 hours
C. One demand position indicator per bank inoperable for one or more banks.	C.1.1 Verify by administrative means all ARPIs for the affected banks are OPERABLE.	Once per 8 hours
	AND	
	C.1.2 Verify the most withdrawn rod and the least withdrawn rod of the affected banks are ≤ 12 steps apart.	Once per 8 hours
		(continued)

ACTIONS

CONDITION	REQUIRED ACTION	COMPLETION TIME
C. (continued)	OR C.2 Reduce THERMAL POWER to ≤ 50% RTP.	8 hours
D. Required Action and associated Completion Time not met.	D.1 Be in MODE 3.	6 hours

SURVEILLANCE REQUIREMENTS

SURVEILLANCE		FREQUENCY
SR 3.1.8.1	Verify each ARPI agrees within 12 steps of the group demand position for the full indicated range of rod travel.	18 months

ACTIONS (continued)

A.2.1, A.2.2

Required Action A.2.1 and Action A.1 are essentially the same. Therefore, the discussion provided above for Action A.1 applies to Action A.2.1. The options provided by Actions A.2.1 and A.2.2 allow for continued operation in a situation where the component causing the ARPI to be inoperable is inaccessible due to operating conditions (adverse radiological or temperature environment). In this situation, repair of the ARPI cannot occur until the unit is in an operating MODE that allows access to the failed components.

In addition to the initial 8 hour verification, Action A.2.1 also requires the following for the rod with the failed ARPI:

1. *Verification of the position of the rod every 31 days using the incore movable detectors.*

2. *Verification of the position of the rod using the incore movable detectors within 8 hours of the performance of Action A.2.2 whenever there is an indication of unintended rod movement based on the parameters of the stationary gripper coil.*

Action A.2.2 is in lieu of the verification of the position of the rod using the incore movable detectors every 8 hours as required by Action A.1. This action alleviates the potential for excessive wear on the incore system due to the repeated use of the incore detectors. Once the position of the rod with the failed ARPI is confirmed through the use of the moveable incore detectors in accordance with Action A.2.1, the parameters of the stationary gripper coil must be monitored until the failed ARPI is repaired. Should the review of the stationary gripper coil parameters indicate unintended movement of the rod, the position of the rod must be verified within 8 hours in accordance with Action A.2.1.

(continued)

BASES

ACTIONS (continued)

A.3 ~~2~~

Reduction of THERMAL POWER to ≤ 50% RTP puts the core into a condition where rod position is not significantly affecting core peaking factors (Ref. 13). The allowed Completion Time of 8 hours is reasonable, based on operating experience, for reducing power to ≤ 50% RTP from full power conditions without challenging plant systems and allowing for rod position determination by Required Action A.1 above. ***Consistent with LCO 3.0.4 and this action, unit startup and operation to ≤ 50% RTP may occur with one ARPI per group inoperable.***

B.1 and B.2

These Required Actions clarify that when one or more rods with inoperable position indicators have been moved in excess of 24 steps in one direction, since the position was last determined, the Required Actions of A.1 and A.2 are still appropriate but must be initiated promptly under Required Action B.1 to begin verifying that these rods are still properly positioned, relative to their group positions.

If, within 4 hours, the rod positions have not been determined, THERMAL POWER must be reduced to ≤ 50% RTP within 8 hours to avoid undesirable power distributions that could result from continued operation at > 50% RTP, if one or more rods are misaligned by more than 24 steps. The allowed Completion Time of 4 hours provides an acceptable period of time to verify the rod positions.

C.1.1 and C.1.2

With one demand position indicator per bank inoperable, the rod positions can be determined by the ARPI System. Since normal power operation does not require excessive movement of rods, verification by administrative means that the rod position indicators are OPERABLE and the most withdrawn rod and the least withdrawn rod are ≤ 12 steps apart within the allowed Completion Time of once every 8 hours is adequate.

(continued)