AUG 10 1990

Mr. John E. Latz
President
Center for Nuclear Waste Regulatory Analyses
Southwest Research Institute
6220 Culebra Road
San Antonio, Texas 78228-0510

Dear Mr. Latz:

I have enclosed Revision 1 of the Schedule Prioritization of Center's High-Level Waste Repository Activities (Enclosure 1) and the "First Update of the Regulatory Strategy and Schedules for the High-Level Waste Repository Program" (SECY-90-207) (Enclosure 2).

Enclosure 1 lists the work required for FY91 and FY92. Work not listed that is being conducted in FY90 should be closed out in FY90. Before the submittal of the Center's FY91-92 Operations Plan, the Center should inform the appropriate NRC Program Element Manager of any such FY90 work that the Center feels can not or should not be closed out in FY90, or any new work not listed on Enclosure 1. Any such work will then be brought to my attention, and a decision will be made on whether any work is appropriate in FY91. For example, the Natural Resources Staff Technical Position is not in the NRC FY91 budget; however, I have approved some additional Center work in FY91 needed to complete the close out of the FY90 work.

If you have any questions concerning this guidance please give me a call.

Sincerely,

ORIGINAL SIGNED BY

Robert E. Browning, Director
Division of High-Level Waste Management

Enclosures: As stated

DISTRIBUTION

Central File	B.J. Youngblood	R.E. Browning	J. Bunting
LSS	J. Linehan	R. Ballard	On-Site Reps
CNWRA	NMSS R/F	HLPD R/F	R. Johnson
LPDR	ACNW	PDR	

SEE PREVIOUS

OFC	:HLPD	:HLPD	:HLGP	:HLEN	:HLWM	:HLWM
NAME	:RJohnson/wd	:JLinehan	:RBallard	:JBunting	:BYoungblood	:RBrowning
DATE	:08/10/90	:08/ /90	:08/ /90	:08/ /90	:08/10/90	:08/10/90

OFFICIAL RECORD COPY

426.1
WM-11
NH16

Mr. John E. Latz
President
Center for Nuclear Waste Regulatory Analyses
Southwest Research Institute
6220 Culebra Road
San Antonio, Texas 78228-0510

Dear Mr. Latz:

I have enclosed Revision 1 of the Schedule Prioritization of Center's High-Level Waste Repository Activities (Enclosure 1) and the "First Update of the Regulatory Strategy and Schedules for the High-Level Waste Repository Program" (SECY-90-207) (Enclosure 2). These two documents should guide the preparation of the Center's FY91-92 Operations Plans supporting NRC's Division of High-Level Waste Management.

Enclosure 1 lists activities for which resources are allocated in NRC's FY91 budget. Activities not listed that are being worked on in FY90 should be closed out in FY90. Before the submittal of the Center's FY91-92 Operations Plan, the Center should inform the appropriate NRC Program Element Manager of any such FY90 activities that the Center feels can not or should not be closed out in FY90, or any new activities not listed on Enclosure 1. Any such activities will then be brought to my attention, and a decision will be made on whether any work is appropriate in FY91. For example, the Natural Resources Staff Technical Position is not in the FY91 budget; however, I have approved about one month of Center work in FY91 needed to complete the close out of this FY90 activity.

If you have any questions concerning this guidance please give me a call.

Sincerely,

Robert E. Browning, Director
Division of High-Level Waste Management

Enclosures: As stated

DISTRIBUTION

Central File	B.J. Youngblood	R.E. Browning	J. Bunting
LSS	J. Linehan	R. Ballard	On-Site Reps
CNWRA	NMSS R/F	HLPD R/F	R. Johnson
LPDR	ACNW	PDR	

OFC :	HLPD	HLPD	HLGP	HLEN	HLWM	HLWM
NAME:	RJohnson/wd	JLinehan	RBallard	JBunting	BYoungblood	RBrowning
DATE:	08/8/90	08/8/90	08/8/90	08/9/90	08/9/90	08/9/90

OFFICIAL RECORD COPY

SCHEDULE PRIORITIZATION OF THE CENTER'S HIGH-LEVEL WASTE REPOSITORY FY91-FY92 WORK*
REVISION 1, AUGUST 10, 1990

PRIORITY 1 (Minimal or no flexibility in Center major milestone dates; flexibility in intermediate milestone dates as long as major Center milestones are not impacted)

Conform Part 60 to EPA Standard RM
Methodology for Demo. Compl. with EPA Standard RM
Repository Operations Criteria RM
Substantially Complete Containment RUR
Groundwater Travel Time/Disturbed Zone RUR
License Application Review Strategy
License Application Review Plan
Iterative Performance Assessment
SRA--Regulatory Uncertainty Identification
SRA--Review Strategy and Technical Uncertainty
Regulatory Uncertainty Staff Position & Report
CNWRA Operations and Planning

PRIORITY 2 (Minimal or no flexibility in a Center major milestone date that supports a final NRC product; flexibility in other major Center milestone dates and intermediate milestone dates as long as these do not impact the major milestone supporting the final NRC product)

SCP Progress Report Reviews
DOE Mission Plan and PDS Review
Probabilistic Seismic Hazard Analysis STP
GWTT Analysis Method Preparation
EBS Analysis Method Preparation
QA Reviews and Audits
QA On-site Visits
Study Plan Technical Reviews
Major Design Report Reviews
SRA--Compliance Demonstration Methods for Unsat. Zone and ESF/RDCO Integration
SRA--System Development and Operation
Natural Resources STP Closeout

PRIORITY 3 (Flexibility in all Center major and intermediate milestone dates)

PRIORITY 4 (Greatest flexibility in all milestone dates but only after Priority 1-3 activities are scheduled)

* Required FY91 Center work. Priorities for FY92 are generally the same as FY91, but will be revised next year to reflect the next NRC annual planning cycle.

ENCLOSURE 2

POLICY ISSUE
(Information)

June 7, 1990 SECY-90-207

For: The Commissioners

From: James M. Taylor
Executive Director
for Operations

Subject: FIRST UPDATE OF THE REGULATORY STRATEGY AND SCHEDULES FOR THE HIGH-LEVEL WASTE REPOSITORY PROGRAM

Purpose: To inform the Commission of the staff's first update to "Regulatory Strategy and Schedules for the High-Level Waste Repository Program," SECY-88-285.

Summary: This paper is the first update of the staff's "Regulatory Strategy and Schedules for the High-Level Waste Repository Program," SECY-88-285 issued in October 1988. Updates are given for the existing regulatory framework and strategies for identifying and reducing uncertainties. Important progress and future activities for identifying and reducing regulatory, technical, and institutional uncertainties are summarized. Finally, the current schedules for potential rulemakings and guidance documents planned for reducing regulatory uncertainties are shown.

Background: In response to a Commission request, the staff issued a Commission paper on October 5, 1988, entitled "Regulatory Strategy and Schedules for the High-Level Waste Repository Program" (SECY-88-285). This paper identified the existing regulatory framework, strategies for identifying uncertainties in the framework, strategies for reducing uncertainties, and key programmatic schedules. The regulatory strategy in SECY-88-285 also listed the potential rulemakings and staff positions that the staff planned to use to reduce uncertainties identified by the staff as of that time. SECY-88-285 was reflected in the U.S. Nuclear Regulatory Commission's (NRC's) FY1990-1994 Five-Year Plan for the High-Level Waste (HLW) Repository Licensing Program Element, the principal document giving programmatic guidance to the staff.

Since the issuance of SECY-88-285, the following events have occurred that are particularly relevant to the HLW regulatory strategy:

Contact:
Robert L. Johnson, NMSS
492-0409

NOTE: TO BE MADE PUBLICLY AVAILABLE IN 10 WORKING DAYS FROM THE DATE OF THIS PAPER

33

9006140216

(1) The U.S. Department of Energy (DOE) announced its revised program and schedules (see Enclosure 1) in its November 30, 1989, "Report to Congress on Reassessment of the Civilian Radioactive Waste Management Program," and subsequently provided additional information in its February 1990 draft Project Decision Schedule (PDS);

(2) As a result of DOE's revised program, the staff's HLW Strategic Planning Panel reevaluated and recommended changes to NRC's HLW Five-Year Plan assumptions, objectives, and guidance;

(3) The staff and Center for Nuclear Waste Regulatory Analyses (Center) identified additional regulatory and institutional uncertainties in 10 CFR Part 60.

In addition, both DOE and the State of Nevada commented on SECY-88-285, and the staff responded to their comments. The staff reevaluated its regulatory strategy in SECY-88-285, with respect to the events listed above, the responses to comments, and its experience with implementing its regulatory strategy. As a result, some changes have been made to the regulatory strategy and program. These changes were included in the recent development of the Five-Year Plan for FY 1991-1995 and the corresponding Budget Estimates. This regulatory strategy will be updated as needed, and important changes will continue to be reflected in the quarterly progress reports to the Commission.

This Commission paper updates the initial strategy in SECY-88-285 and summarizes progress and future activities. Therefore, SECY-88-285 should continue to be a reference for a description of the staff's regulatory strategy. This approach is considered appropriate because the basic strategy has not changed. To facilitate this approach, the organization of this update is the same organization used in SECY-88-285. Section I identifies the existing regulatory framework, Section II addresses the strategy for identifying uncertainties, and Section III addresses the strategy for reducing uncertainties.

Discussion:

I. Existing Regulatory Framework

The staff's judgment continues to be that the established regulatory framework is sound and adequate.

Since the regulatory strategy in SECY-88-285 was issued in October 1988, two final rulemakings have been completed that addressed institutional uncertainties. One addressed

the Licensing Support System (LSS) and licensing procedures, whereas the other addressed adopting DOE's environmental impact statement. In addition, the staff completed one final staff position on post-closure seals in an unsaturated medium and two draft staff positions, one on tectonic models and another on methods for evaluating the seismic hazard at a geologic repository. A revised list of issued rulemakings, staff positions, and regulatory guides applicable to the Yucca Mountain site is given in Enclosure 2.

II. Identifying Uncertainties

The staff's strategy for identifying uncertainties described in SECY-88-285 remains unchanged. The staff has successfully used and will continue to use the following methods to identify uncertainties: (1) Systematic Regulatory Analysis (SRA) by the Center*; (2) prelicensing reviews of DOE documents; (3) preliminary performance assessments; (4) other Office of Nuclear Material Safety and Safeguards (NMSS) and Office of Nuclear Regulatory Research (RES) technical work; and (5) staff consideration of actions or suggestions by DOE, State of Nevada, and others.

A. Regulatory and Institutional Uncertainties

Since the issuance of SECY-88-285, the Center has essentially completed its independent analysis of 10 CFR Part 60 to identify and document potential regulatory and institutional uncertainties. Using the SRA process the Center identified 43 potential regulatory and institutional uncertainties, which are summarized in Enclosure 4. Additional information about each uncertainty and the Center's use of the SRA is included in the Center's report entitled "Identification and Evaluation of Regulatory and Institutional Uncertainties in 10 CFR Part 60," February 1990, CNWRA 90-003.

The staff also identified six additional regulatory uncertainties and one institutional uncertainty while developing the draft Format and Content Regulatory Guide (FCRG) for the License Application, potential rulemakings, and staff positions. These uncertainties are summarized in Enclosure 5.

* The SRA process and how it relates to other staff activities in the HLW Repository Licensing Program is summarized in Enclosure 3.

Finally, a Commission paper on implementing the U.S. Environmental Protection Agency (EPA) HLW standards will soon be completed, which discusses associated regulatory uncertainties.

On April 19, 1990, DOE submitted a petition for rulemaking for accident dose guidelines. This petition identifies the need for regulatory requirements that the staff previously identified in its regulatory uncertainty regarding the need for a design basis accident dose limit. Therefore, this DOE action has not resulted in an additional regulatory uncertainty.

The staff is currently planning a future activity that might result in identifying additional regulatory and institutional uncertainties. This activity consists of the Center completing a sufficiency analysis of 10 CFR Part 60, in FY 1991, to determine if the regulatory requirements address all major repository functions. This analysis will complete the Center's identification of potential regulatory and institutional uncertainties for 10 CFR Part 60.

Finally, it is important to note that the staff has decided to defer indefinitely the Center's SRA of 10 CFR Part 71 (packaging and transportation) and 10 CFR Part 72 (independent storage) to identify potential regulatory and institutional uncertainties. Due to resource constraints, the staff is giving higher priority to continuing the SRA of 10 CFR Part 60 to identify key technical uncertainties and prepare the technical basis for potential rulemakings, staff positions, and the License Application Review Plan (LARP) (see Enclosure 3).

B. Technical Uncertainties

Subsequent to the issuance of SECY-88-285, the staff identified several concerns with DOE's program during prelicense application reviews. The staff considers all these concerns to be technical uncertainties for DOE's reduction. The most important review to date has been the review of the Site Characterization Plan (SCP) which is documented in NRC's Site Characterization Analysis (SCA) (NUREG-1347).

The staff anticipates that its future reviews of DOE's study plans and reports will continue to be a principal method for identifying additional technical uncertainties for specific parts of DOE's program.

The previously mentioned Commission paper on implementing the EPA HLW standards will also describe the types of associated technical uncertainties.

The staff and Center will also begin the next step of the SRA process in FY 1991, which includes identifying key technical uncertainties. Previously identified staff technical uncertainties (e.g., technical position topics and SCP comments) together with results from the staff's performance assessment modeling will be considered in determining areas of highest uncertainty that are also most significant to repository performance at the Yucca Mountain site. These key technical uncertainties will be useful in prioritizing those technical areas where the staff should develop its review capability, develop guidance documents for DOE, conduct prelicense application reviews, and conduct research.

III. Reducing Uncertainties

In SECY-88-285, the staff planned on completing its rulemakings and guidance in 1992 which was when DOE was previously planning to begin preparing its License Application for the Yucca Mountain site. DOE's revised schedule, shown in Enclosure 1, indicates that it now plans on starting its License Application in 1998. This new schedule allows the staff to take a more comprehensive and integrated approach to developing its rulemakings and guidance, as described below. The current schedules show completing rulemakings and guidance documents by approximately 1995, which is 3 years before DOE currently plans on beginning its License Application (see Enclosure 6).

A. Regulatory Uncertainties

The staff's general strategy, in SECY-88-285, of using rulemakings, staff positions, and regulatory guides has not changed. Substantive rulemakings will be used to resolve omissions, major

deficiencies, clarifications needing a change in the requirement language, and conforming amendments. These rulemakings will be generic rather than specific to the Yucca Mountain site, as recommended by the staff's HLW Strategic Planning Panel.

Consistent with this strategy, the staff is continuing to plan on potential rulemakings for five of the nine potential rulemakings topics listed in SECY-88-285 (see Enclosure 7). These five potential rulemakings are: (1) "Conforming 10 CFR Part 60 to the EPA HLW Standards"; (2) "Methodology for Demonstrating Compliance with the EPA HLW Standards"; (3) "Repository Operations Criteria" (formerly "Design Basis Accident Dose Limit for Repository Operations"); (4) "Criteria for Containment of Greater-than-Class-C Low-Level Waste"; and (5) "Emergency Planning Criteria." The previously planned rulemaking entitled "Anticipated Processes and Events and Unanticipated Processes and Events" has been combined with the rulemaking on "Conforming 10 CFR Part 60 to the EPA HLW Standards." For three other topics listed as potential rulemakings in SECY-88-285 (i.e., "Substantially Complete Containment," "Groundwater Travel Time," and "Disturbed Zone"), the staff is continuing to develop an adequate technical basis (using the SRA process) for reducing these uncertainties, before it selects the appropriate reduction method. The staff's schedule (see Enclosure 6) shows two unnamed rulemakings in case the staff decides to use rulemaking for these or other uncertainties. Finally, a sixth potential rulemaking on "License Application Docketing Criteria and Content" is now listed under reducing regulatory uncertainty, instead of institutional uncertainty, as it was in SECY-88-285.

The potential rulemaking referred to in SECY-88-285 as "Design Basis Accident Dose Limit for Repository Operations" was approved by the Executive Director for Operations (EDO) in October 1989. The rulemaking focused on making 10 CFR Part 60 the same as 10 CFR Part 72, in areas related to the mitigation of accident consequences and the definition of items important to safety. While preparing the proposed rule, however, the staff

found other dissimilarities between 10 CFR Parts 60 and 72. Consequently, the staff is analyzing the functions that should be regulated and will consider whether 10 CFR Part 60 should be revised. Because the scope of this rulemaking has been broadened, its name has been changed to "Repository Operations Criteria."

The schedules in Enclosure 6 for potential rulemakings have been changed from the initial schedules in SECY-88-285. The schedule changes were necessary to: (1) develop an adequate technical basis, (2) assess the feasibility of implementing the rulemakings, and (3) account for expanded scopes. The staff will be using the SRA process to develop the technical basis for its potential rulemakings. The staff will also have more extensive internal interactions among the staff's different technical disciplines and more extensive external interactions with DOE, State of Nevada, and other parties. These interactions are necessary to prepare an adequate technical basis that is both technically sound and feasible to implement.

In addition to potential rulemakings, the staff is continuing work on two regulatory guides. First, the staff will rely on the FCRG to be the primary method for giving generic guidance for reducing uncertainty about the format and content of DOE's license application. However, the staff will recommend that DOE prepare, for the staff's review, an annotated outline of the License Application for the Yucca Mountain site . This approach will determine if DOE's understanding of the draft FCRG for the Yucca Mountain site is consistent with the staff's intent. The staff plans to review and comment on DOE's annotated outline as an additional way to give DOE guidance on the format and content of the License Application for Yucca Mountain. This experience also will be an effective way to determine where revisions are needed to the draft FCRG. The current schedule for preparing a draft and final FCRG is given in Enclosure 6.

The staff is also preparing a regulatory guide to revise the topical guidelines for the LSS to ensure that they describe all of the information that should be submitted to the LSS to support the HLW repository licensing process. This regulatory guide has been developed to be consistent with the FCRG. Enclosure 6 gives the schedule for the LSS regulatory guide.

The additional regulatory uncertainties identified by the staff and Center since the issuance of SECY-88-285, will likely necessitate a combination of reduction methods. The staff is currently evaluating these uncertainties to select the appropriate reduction methods. The staff's selection will be documented in a future report. However, the staff's initial view is that some uncertainties might be reduced by the ongoing or planned rulemakings, and many others might be reduced by using staff positions. Such staff positions would record the staff's interpretation of existing regulatory requirements or a position on the uncertainty being addressed. They would be coordinated among and reflect the views of NMSS, RES, and Office of the General Counsel (OGC). However, these staff positions would not be binding on the Commission, licensing boards, or parties to a licensing proceeding. They might eventually be followed, however, by rulemaking action (either interpretative or substantive, with notice and comment). The staff is planning on preparing a single staff position to consolidate clarifications and minor corrections that would address many of the uncertainties identified in CNWRA 90-003. Enclosure 6 gives the schedule for this staff position and the report on the selected uncertainty reduction methods. Other staff positions will be prepared as needed.

B. Technical Uncertainties

As described in SECY-88-285, the staff continues to consider that reducing technical uncertainties is DOE's responsibility, and that the staff will give DOE guidance through a combination of prelicense application reviews, interactions with DOE, and staff positions. The LARP will also be available to DOE and other parties so they will be aware of how the staff will conduct both its prelicense application reviews and License Application review. Based on its

experience with developing guidance and conducting reviews, the staff has decided to place greater emphasis on prelicense application reviews and preparing the basis for these reviews in the LARP. The SRA process (see Enclosure 3) will be used to develop a sound, well-integrated review capability in the LARP. Although the staff's previous approach of preparing positions for the topics listed in SECY-88-285 focused on important technical uncertainties, it would not have resulted in a sufficiently well-integrated review capability and guidance to DOE. The staff's revised approach using the SRA process will include analyzing the technical uncertainties listed in SECY-88-285; however, these uncertainties will be addressed as part of the total analysis to determine the review criteria and methods the staff will use to review all the regulatory requirements. For some key technical uncertainties, research will be used as needed before the staff's review capability is completed. The staff may also decide, based on the SRA, that preparing staff positions is needed to address a few key technical uncertainties. Consistent with this approach, the staff is now planning to prepare about two staff positions each year, which is about half the number of staff positions previously planned in SECY-88-285. The staff positions currently planned are listed in Enclosure 7.

The change in guidance emphasis described above is consistent with one of DOE's suggestions made in the December 20, 1989, presentation to the Commission. DOE suggested that it prepare topical reports for the staff's review as an alternative guidance method. As mentioned in SECY-90-082, the staff favors this method because fewer resources would be needed for reviewing DOE topical reports or other reports than for developing staff positions in the absence of a topical report.

The staff has conducted a number of prelicense application reviews and interactions with DOE since SECY-88-285 was issued. In particular, it has reviewed DOE's SCP and issued comments in the SCA. This review covered DOE's entire repository program, including the technical uncertainties listed in SECY-88-285. For these uncertainties, and other areas as well, the

staff's comments and recommendations gave DOE guidance where the staff had identified a concern with DOE's plans. Although the staff's reviews and interactions have not fully reduced any technical uncertainties, they have resulted in DOE revising its plans and making some progress toward uncertainty reduction. It is important to note, however, that reduction of technical uncertainties depends on DOE implementing its plans, primarily by collecting and analyzing data at the Yucca Mountain site and by developing designs and performance assessment methods. The staff will continue to follow these DOE activities and encourage DOE's reduction of technical uncertainties in its prelicense application reviews and interactions with DOE.

In addition to prelicense application reviews, the staff has made progress in reducing technical uncertainties since the issuance of SECY-88-285 by completing two draft staff positions and one final staff position (see Enclosure 2). Work will continue on completing two final staff positions in FY 1991 (see Enclosure 7). Thereafter, the staff will complete approximately two positions each year, following the approach described above.

In SECY-88-285, the staff considered that rulemaking is generally not an appropriate method for reducing technical uncertainties when reduction depends on collecting site-specific data, or when flexibility is needed to allow technology to evolve. Although this continues to be the staff's preferred approach, rulemakings might be used in some cases to either require a certain method or indicate one acceptable method. One case is the potential rulemaking on methodology for demonstrating compliance with the EPA HLW standards. Resolution, through rulemaking, of some of the potentially contentious topics associated with implementing the EPA HLW standards formed one of the bases for the staff's view in SECY-89-319 that the EPA HLW standards would be workable in the three-year statutory licensing time period. Since SECY-88-285 was issued, one Commission paper (SECY-89-319) was prepared that gave the staff's views on implementing

probabilistic standards and recommendations for developing procedures and rules for implementing the standards. The previously mentioned Commission paper on implementing the EPA HLW standards will also give the staff's approach for dealing with regulatory and technical uncertainties. Finally, as proposed in SECY-89-319, the staff anticipates working with EPA as it develops its working drafts of the standard such that concerns with implementation can be addressed.

C. Institutional Uncertainties

The staff has not changed its strategy in SECY-88-285 for reducing institutional uncertainties. It will continue to consider a variety of reduction methods, depending on the particular uncertainty.

Since SECY-88-285 was issued, two final rulemakings have been completed that resolve institutional uncertainties. One addressed the LSS and licensing procedures, whereas the other addressed adopting DOE's environmental impact statement.

In addition, the staff has essentially reduced two other institutional uncertainties--one regarding NRC's role in determining compliance with the mine safety requirements and another dealing with NRC's role in EPA'S implementation of the Resource Conservation and Recovery Act (RCRA). For the first one, the NMSS staff requested and received a legal opinion from OGC that reduced the uncertainty by concluding that the staff is responsible for reviewing the mine safety requirements referenced in 10 CFR 60.131 (b)(9).

The RCRA uncertainty was reduced by determining that NRC's role does not include independently evaluating DOE's demonstration of compliance with the requirements of RCRA, since this responsibility falls within the jurisdiction of EPA. The staff has communicated this staff

position to the Commission and subsequently to DOE. The staff, however, intends to monitor the DOE-EPA interactions because they may have an impact on design or other repository activities.

Conclusions: Based on the discussion above, the staff has the following major conclusions:

1. The staff's judgment continues to be that the established regulatory framework for 10 CFR Part 60 is sound and adequate.

2. The strategy for identifying uncertainties has not changed. Identifying regulatory and institutional uncertainties for 10 CFR Part 60, using the SRA process, is essentially complete. The next step of the SRA process will include identifying key technical uncertainties, considering in the process the technical uncertainties previously identified by the staff.

3. The strategy for reducing uncertainties has been revised. DOE's revised schedule allows the staff to take a more systematic and integrated approach to developing potential rulemakings, guidance documents, and the LARP, using the SRA process. The staff now plans on completing its final rulemakings and guidance documents by approximately 1995, which is 3 years before DOE currently plans on beginning the license application. The staff currently plans on preparing six potential rulemakings, two regulatory guides, and each year, approximately two staff positions. The staff is also placing greater emphasis on prelicense application reviews and preparing the basis for these reviews in the LARP using the SRA process. As a result, fewer staff positions will be prepared.

4. This regulatory strategy will be updated as needed, and important changes will continue to be included in the quarterly reports to the Commission.

Coordination: OGC has reviewed this paper and has no legal objection. RES has reviewed this paper and can support the schedules for potential rulemakings and the FCRG shown in Enclosure 6 subject to determining priority resource allocation as the schedule for these planned products firms up.

James M. Taylor
Executive Director
for Operations

Enclosures:
1. DOE's Revised Schedule for Geologic Repository Site Nomination and Characterization Phases
2. List of Issued Rulemakings, Staff Positions, and Regulatory Guides Applicable to the Yucca Mountain Site
3. Summary of the SRA Process for 10 CFR Part 60
4. Potential Reg. and Institutional Uncertainties Identified by the CNWRA
5. Add'l Reg. and Institutional Uncertainties Identified by the Staff since 88-285 was Issued.
6. Schedule of NRC Reg. Uncertainty Reduction Activities
7. Ongoing and Planned Potential Rulemakings, Staff Positions, and Regulatory Guides

DISTRIBUTION:
Commissioners
OGC
OIG
LSS
GPA
REGIONAL OFFICES
EDO
ACRS
ACNW
ASLBP
ASLAP
SECY

ENCLOSURE 1

THE U.S. DEPARTMENT OF ENERGY'S (DOE'S) REVISED SCHEDULE FOR GEOLOGIC REPOSITORY SITE NOMINATION AND CHARACTERIZATION PHASES (FROM DOE'S DRAFT PROJECT DECISION SCHEDULE REVISION 1, FEBRUARY 1990.)

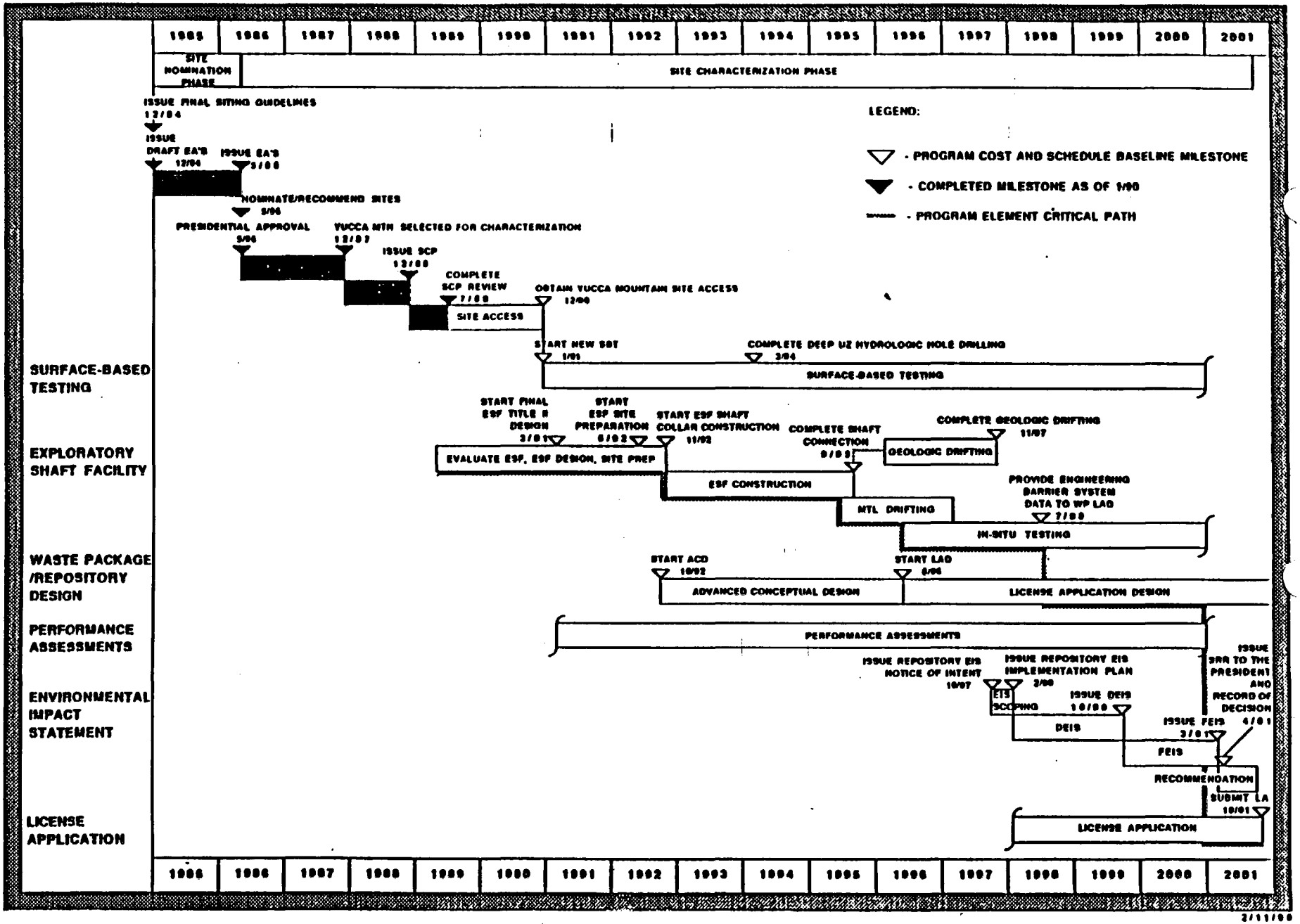

ENCLOSURE 2

LIST OF ISSUED RULEMAKINGS AND STAFF POSITIONS APPLICABLE TO THE YUCCA MOUNTAIN SITE

Rulemaking Titles	Issue Dates
1. "Licensing Procedures for High-Level Waste (HLW) in Geologic Repositories"	February 1981
2. "Technical Criteria for HLW in Geologic Repositories"	June 1983
3. "Disposal of HLW within the Unsaturated Zone"	July 1985
4. "Site Characterization and State/Tribal Participation"	July 1986
*5. "Negotiated Rulemaking on Submission and Management of Records and Documents"	April 1989
*6. "Implementation of Nuclear Waste Policy Act (NWPA) Provisions Requiring NRC to Adopt DOE's Environmental Impact Statement"	July 1989

Staff Position Titles	
1. "Documentation of Computer Codes" (Final) (NUREG-0856)	June 1983
2. "Licensing Assessment Methodology for HLW Geologic Repositories" (Draft)	July 1984
3. "Issue-Oriented Site Technical Position (ISTP) for Nevada Nuclear Waste Storage Investigation (NNWSI)" (Draft)	September 1984
4. "Determination of Radionuclide Solubility in Groundwater for Assessment of High-Level Radionuclide Waste Isolation" (Final)	November 1984
5. "Waste Package Reliability Analysis" (Final)	December 1985
6. "In-Situ Testing during Site Characterization" (Final)	December 1985
7. "Design Information Needs in Site Characterization"	December 1985
8. "Borehole and Shaft Seals" (Final)	February 1986

* Rulemakings issued since SECY-88-285.

9.	"Groundwater Travel Time" (Draft)	July 1986
10.	"Interpretation and Identification of the Disturbed Zone" (Draft)	July 1986
11.	"Determination of Radionuclide Sorption for HLW Repositories" (Final)	January 1987
12.	"Qualification of Existing Data for HLW Repositories" (Final) (NUREG-1928 dated February 1988)	June 1987
13.	"Peer Review for HLW Repositories" (Final) (NUREG-1297 dated February 1988)	June 1987
14.	"Guidance for Determination of Anticipated Processes and Events and Unanticipated Processes and Events" (Draft)	February 1988
15.	"Items and Activities in the High-Level Waste Geologic Repository Program Subject to Quality Assurance Requirements" (Final) (NUREG-1318)	April 1988
*16.	"Tectonic Models under 10 CFR Part 60 (Draft)	June 1989
*17.	"Postclosure Seals, Barriers, and Drainage System in an Unsaturated Medium" (Final) (NUREG-1373)	August 1989
*18.	"Methods of Evaluating the Seismic Hazard at a Geologic Repository" (Draft)	August 1989

Regulatory Guide Title

1.	"Standard Format and Content of Site Characterization Plans for High-Level Waste Geologic Repositories" (Regulatory Guide 4.17) (Revision 1)	March 1987

* Staff Positions issued since SECY-88-285.

ENCLOSURE 3

SUMMARY OF SYSTEMATIC REGULATORY ANALYSIS (SRA) PROCESS FOR 10 CFR PART 60

SRA is the process by which the regulatory requirements of 10 CFR Part 60 for a geologic repository are being analyzed in a comprehensive, systematic, structured manner and controlled by technical operating procedures. In general, the SRA of 10 CFR Part 60 will identify regulatory, institutional, and technical uncertainties; prepare the technical basis to support reduction of uncertainties; and develop the review criteria and methods for reviewing the U. S. Department of Energy's (DOE's) site characterization program and License Application.

More specifically, the SRA process has resulted in grouping the regulatory requirements of 10 CFR Part 60 into 91 topics of similar subject matter. These regulatory topics have been analyzed to identify regulatory and institutional uncertainties. Beginning in FY 1991, SRA will become primarily concerned with the analysis of all 91 regulatory topics to identify, for each topic, key technical uncertainties, methods of uncertainty reduction, and a strategy for both prelicense application review and License Application review (compliance determination strategy). These review strategies will then guide the development of review criteria, review methods (compliance determination methods), review information needs, and necessary supporting technical bases for each topic during FY 1991-1994. This analysis of the 91 regulatory topics will be scheduled based on a prioritization completed in early FY 1991. The SRA will also be updated based on new information from DOE's site characterization activities and staff activities such as performance assessments and research.

The results of the SRA will:

- Form the basis for developing rulemakings and staff positions needed to reduce regulatory and technical uncertainties;

- Provide the review strategies, review criteria, and review methods that will comprise the technical substance of the License Application Review Plan (LARP). (The LARP will be the primary document used by the the staff for reviewing DOE's license application and prelicense application reports such as Site Characterization Plan progress reports, study plans, advanced conceptual designs, technical reports, topical reports, and issue resolution reports.)

- Develop technical review components and review information needs, which will be incorporated into the Format and Content Regulatory Guide (FCRG) for the License Application and the LARP.

A key feature of the SRA is that it is supported by a computer-based system and data base, and activities performed as part of SRA are computer-assisted. The principal factors that necessitate a computer-based system are: (1) the complexity of the repository program; (2) the volume of technical and regulatory information that must be evaluated; (3) the need to develop and display the logical interrelationships among the technical data and regulatory information; (4) the need to technically integrate the guidance and the staff review capability; (5) the need to frequently and efficiently update information to reflect a rapidly changing program; and (6) the need to rapidly and accurately access information to support planning, coordination, and conducting the staff's work and decision-making. In addition to its SRA role, the computer-based system is used to integrate the Center for Nuclear Waste Regulatory Analyses project management and office automation functions with the activities of the technical staff. The computer assistance feature also allows direct development of the database as well as archival storage and retrieval functions.

ENCLOSURE 4

POTENTIAL REGULATORY AND INSTITUTIONAL UNCERTAINTIES IDENTIFIED BY THE CENTER FOR NUCLEAR WASTE REGULATORY ANALYSES (AFTER CNWRA 90-003)

GROUP	REGULATORY AND INSTITUTIONAL UNCERTAINTIES IN THE GROUP

GROUP I: General Adequacy of Site Characterization

121(b)(1)-UN3; 122(a), 122(c)(1) through 122(c)(24)-UN1 through UN5; 122(b), 122(c)(1) through 122(c)(24)-UN12; 21(c)(1)(ii)(C), 122(c)(1) through 122(c)(24)-UN17; 122(c)(3) and 122(c)(4)-UN18; 122(c)(8)-UN18; 122(c)(16)-UN19; 122(c)(24)-UN18.

There are seven Uncertainties which apply to all potentially adverse conditions. The relationship of these Uncertainties to performance assessment and compliance with 10 CFR 60.101, 60.112 and 10 CFR 60.113 is discussed in some detail in Section 4.3.1. Reduction of these Uncertainties would provide clearer benchmarks against which to judge the general adequacy of site characterization. These benchmarks could provide a basis for "reasonable assurance" that the repository will perform as anticipated. Reduction of the Uncertainties will assist in refining the intended relationship between favorable and potentially adverse conditions.

The Uncertainties include clarifications of the following terms:

- "extent of the geologic setting" (UN3 in 122(b)(1) - the favorable conditions - as well as in 122(c), UN12);
- "taking into account the degree of resolution" of the investigation, UN1;
- "not to underestimate [the] effect" of the potentially adverse condition, UN4;
- "not to affect significantly" the performance of the repository, UN2.

Two additional Uncertainties are found in the absence of criteria for "adequately investigated" (UN5) and for "adequately evaluated" (UN3).

An Uncertainty also resides in the inconsistency with which combinations of potentially adverse conditions are treated in the regulation (UN17). Although combinations of favorable conditions may offset a single potentially adverse condition, the regulation is silent regarding consideration of combination or synergistic action of potentially adverse conditions.

GROUP	REGULATORY AND INSTITUTIONAL UNCERTAINTIES IN THE GROUP
GROUP I: (Cont'd)	Criteria for General Adequacy of Site Characterization

Instances where the language of individual potentially adverse conditions is insufficiently clear are:

- 122(c)(3) and (c)(4)-UN18: "regional groundwater flow system,"
- 122(c)(8)-UN18: "sorption" may be too restrictive,
- 122(c)(16)-UN19: "extreme erosion,"
- 122(c)(24)-UN18: "air-filled pore spaces."

GROUP II: Anticipated and Unanticipated Processes and Events

112-UN1 and 113(a)(2)-UN3 and UN4. These Uncertainties are in the meanings of "anticipated processes and events," "unanticipated processes and events," and "anticipated and unanticipated processes and events".

GROUP III: Systems, Structures, and Components Important to Safety--Design Criteria and Design Bases

131(b)(5)-UN1, 131(b)(6)-UN1, 131(b)(10)-UN1, 72(b)(6)-UN2, 72(b)(7)-UN3, 73(a)-UN1 and 73(b)-UN2. These Uncertainties relate to design criteria and design bases, including those for systems, structures and components important to safety. The Uncertainties include inadequate clarifications of certain design and performance criteria.

GROUP IV: Engineered Barrier System Performance

113(a)(1)(i)(A)-UN1 and 135(c)(1)-UN3. These Uncertainties relate to engineered barrier system performance. They include the Uncertainty in the definition of "substantially complete containment" and the regulation of non-solid constituents of the waste form and waste package.

GROUP V: Radiological Safety Considerations

111(b)-UN3 and 111(a)-UN5. These are Uncertainties in the statements of radiological safety considerations in the regulation. UN3 is an Uncertainty in the extent and degree to which other regulations should be referenced or cited. UN5 is an Uncertainty in the design basis accident dose: the citation of Part 20 implies a considerable range of possible design basis accident doses.

GROUP	REGULATORY AND INSTITUTIONAL UNCERTAINTIES IN THE GROUP

GROUP VI: Retrievability Conditions

46(a)(1)-UN1 and 111(b)(1)-UN1. The Uncertainty in 111(b)(1) is in the statement "option of retrievability" - whether this means designing for retrievability or not precluding it. The Uncertainty 46(a)(1)-UN1 - the reference to "difficulty of retrieval" - could be reduced with reduction of the Uncertainty in 111(b)(1).

GROUP VII: Conditions for Construction Authorization, License and License Amendment

23-UN1, 31-UN1 and 51(a)(2)(ii)-UN1. These are Uncertainties and omissions in the regulations dealing with application and qualification for construction authorization, license application and license amendment.

GROUP VIII: Regulation of Mining Safety and Nonradiological Safety Considerations

131(b)(9)-UN1 and 133(e)-UN1. These reflect Institutional Uncertainty and need for clarification in the regulation of mining safety and other non-radiological safety considerations, respectively.

GROUP IX: Conditions of Land Acquisition and Control

121(a)(1)-UN1. This is an Uncertainty as to when and how DOE will 'guarantee' appropriate land control.

GROUP X: Quality Assurance and Information Requirements

10(b)-UN1, 21-UN1, 22(d)-UN3, 24(a)-UN2 and 152-UN1. These are Uncertainties in the definitions of quality assurance activities, and in record keeping and record disposition requirements.

GROUP XI: Compliance With the EPA Standard

112-UN2. The Uncertainty in 10 CFR 60.112, which deals with overall repository system performance, arises because the regulations cannot conform to the EPA standard until the EPA standard is finalized.

GROUP XII: Emergency Planning Criteria

31(a)(5)-UN2 and Subpart I-UN1. Subpart I, which will delineate the criteria for emergency planning, has not yet been promulgated.

ENCLOSURE 5

ADDITIONAL REGULATORY AND INSTITUTIONAL UNCERTAINTIES IDENTIFIED BY THE STAFF SINCE SECY-88-285 WAS ISSUED

Regulatory Uncertainties

1. Applicability of siting criteria to performance objectives

   The phrase in 10 CFR 60.122, "to meet the performance objectives relating to isolation of the waste," could be interpreted to mean that the siting criteria in 10 CFR 60.122 apply only to the overall system performance objective in 10 CFRP 60.112 or to the subsystem performance objectives in 10 CFR 60.113, as well.

2. Applicability of thermal load requirement to performance objectives

   The thermal load requirement in 10 CFR 60.133 (i) could be interpreted to apply to only the pre-closure performance objectives in 10 CFR 60.111, or to the post-closure performance objectives in 10 CFR 60.112 and 10 CFR 60.113, as well.

3. Waste package containment timeframe

   The 300 to 1,000-year waste package containment timeframe in 10 CFR 60.113 could be interpreted to mean the minimum period during which the waste package must remain substantially complete, or the maximum design lifetime for the waste package for which credit could be taken in demonstrating compliance.

4. Engineered barrier system radionuclide release rate limit

   The annualized radionuclide release rate limits in 10 CFR 60.113(a)(ii)(B) are based on the inventory of radionuclides present at 1000 years following permanent closure of the repository. As such, for some radionuclides (e.g., Am-241 and Pu-240), the allowed releases from the engineered barrier system (EBS) can be several orders of magnitude greater than releases to the accessible environment permitted by the overall performance objective (i.e., the U.S. Environmental Protection Agency (EPA) Standards). The underlying purpose of the EBS release rate limit, together with other subsystem performance objectives, is to enhance the Commission's confidence that the EPA Standard will be met. For some radionuclides, it is unclear if the release rate limit does in fact enhance confidence that the EPA standard will be met.

5. Reference to applicable mine safety requirements

   The reference in 10 CFR 60.131(b)(9) to the applicable mine safety requirements does not reflect the reorganization and renumbering of mine safety requirements in 30 CFR, Chapter I which occurred after 10 CFR Part 60 was issued.

6. Topical Guidelines for the Licensing Support System (LSS)

   Interim topical guidelines, drafted by the parties to the LSS negotiated rulemaking were adopted by the U.S. Nuclear Regulatory Commission (NRC) with the statement that the topical guidelines would be revised later and set forth as a regulatory guide. The interim topical guidelines, partially modeled after the Environmental Assessments prepared in connection with the U.S. Department of Energy's site selection process, need to be revised to describe all of the information which should be submitted to the LSS to support the high-level waste repository licensing process. This revision will clarify the list of topics for which the LSS participants should submit documentary materials for entry into the LSS under 10 CFR 2.1003.

Institutional Uncertainties

1. NRC's role regarding EPA's implementation of the Resource Conservation and Recovery Act (RCRA).

   EPA's RCRA regulations concern chemically hazardous wastes. Because RCRA created an overlapping regulatory authority with the Atomic Energy Act (AEA), EPA can regulate any high-level waste already regulated by NRC under 10 CFR Part 60 that is found to contain RCRA-defined chemically hazardous substances. As a consequence, it is not clear how the affected agencies (both EPA and NRC) would administratively implement their respective programs in the context of AEA and RCRA.

ENCLOSURE 6

SCHEDULE OF NRC REGULATORY UNCERTAINTY REDUCTION ACTIVITIES

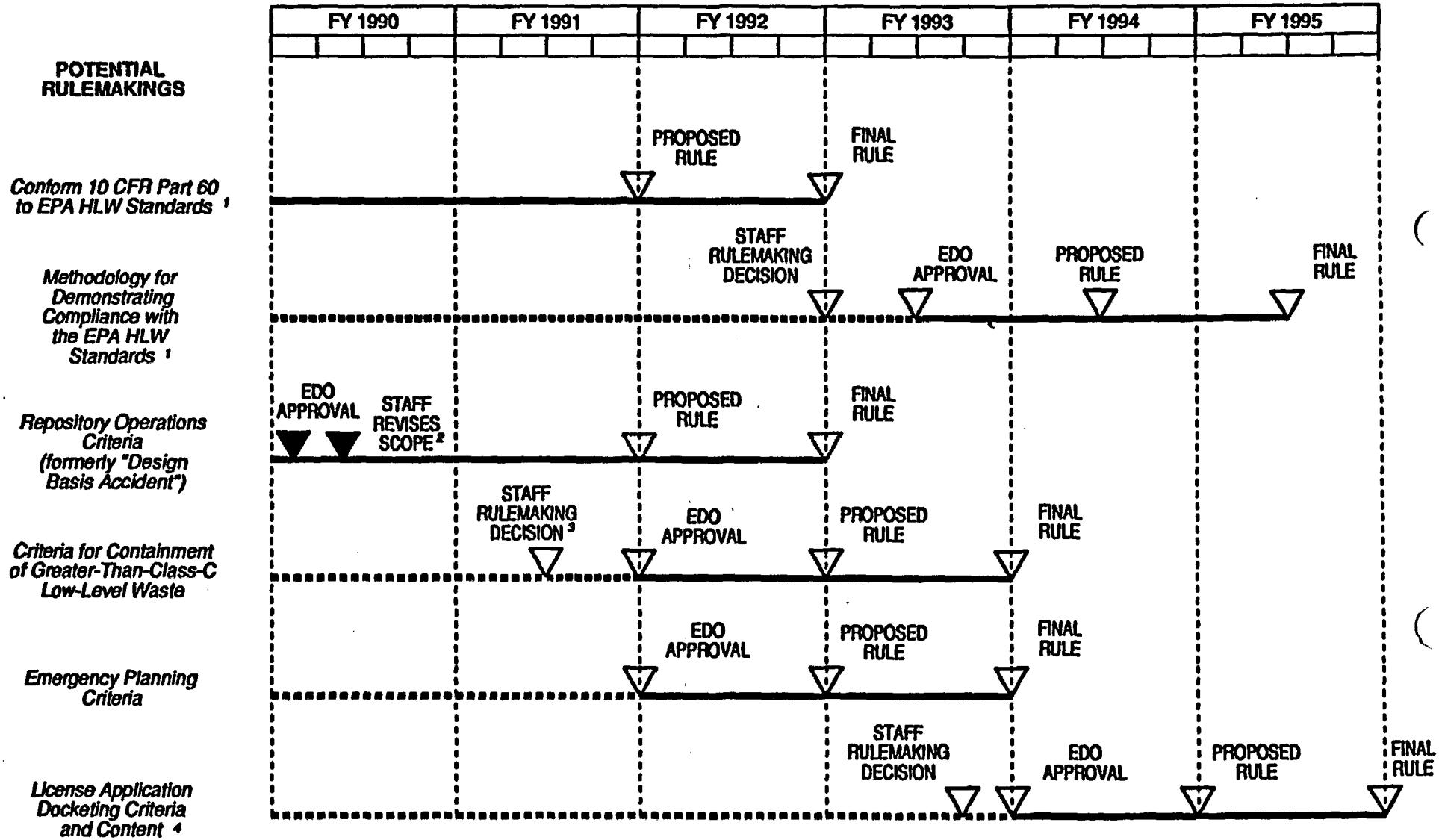

1. Schedule assumes that the final EPA Standard will be issued during the first quarter of FY 1991.
2. With the approval of the NMSS Office Director. Subsequent milestone-date revisions being determined.
3. Decision dependent on information from DOE on the types and quantities of waste to be disposed of in the geologic repository.
4. The technical basis for this rulemaking will be based on the Format and Content Regulatory Guide (FCRG) for the License Application.

Formal two-year rulemaking activity

Technical basis development and staff decision on whether a rulemaking should be prepared

Milestone

Completed milestone

SCHEDULE OF NRC REGULATORY UNCERTAINTY REDUCTION ACTIVITIES

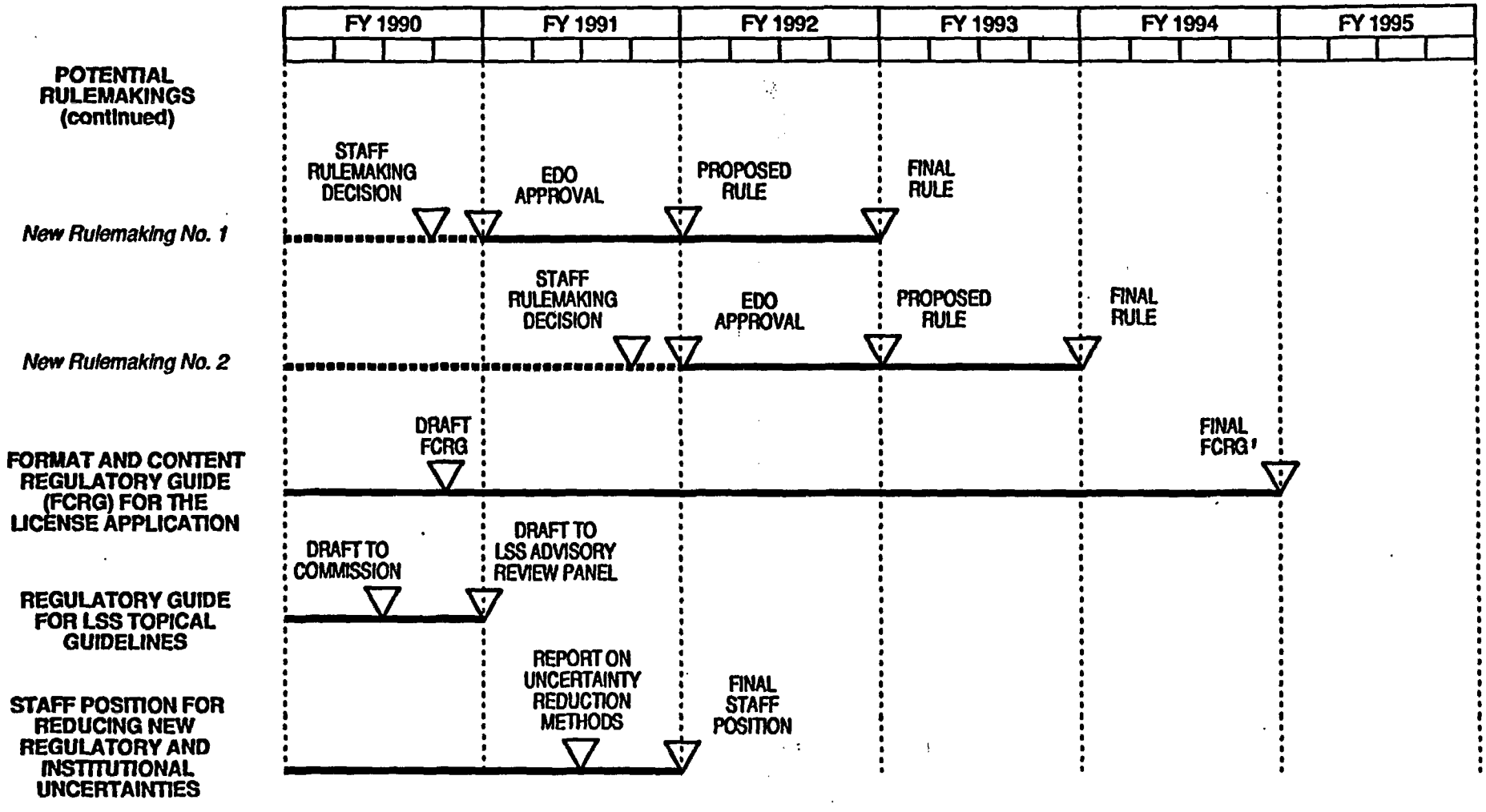

1. Activities to complete a final FCRG will include: evaluate public comments on the draft; suggest that DOE prepare a License Application annotated outline for Yucca Mountain; review the annotated outline; and make the FCRG consistent with the License Application Review Plan.

Formal two-year rulemaking activity

Technical basis development and staff decision on whether a rulemaking should be prepared

Milestone

Completed milestone

ENCLOSURE 7

LIST OF ONGOING AND PLANNED POTENTIAL RULEMAKINGS, STAFF POSITIONS, AND REGULATORY GUIDES

Potential Rulemakings

1. "Conforming Part 60 to U.S. Environmental Protection Agency (EPA) High-Level Waste (HLW) Standards" (now includes the previous potential rulemaking addressing "Anticipated Processes and Events and Unanticipated Processes and Events").

*2. "Methodology for Demonstrating Compliance with EPA HLW Standards"

3. "Establishment of Criteria for Containment of Greater-Than-Class-C Low-level Waste when it is Disposed of in a Deep Geologic Repository"

4. "Repository Operations Criteria" (formerly entitled "Design Basis Accident Dose Limit for Repository Operations")

5. "Establishment of Emergency Planning Criteria under Subpart I of 10 CFR Part 60"

6. "Revisions to Content of License Application and Docketing Criteria for the License Application"

Staff Positions**

1. "Seismic Hazard Investigations" (formerly entitled "Methods of Evaluating the Seismic Hazard at a Geologic Repository")

2. "Probabilistic Seismic Hazard Analysis"

3. "Reduction of Regulatory and Institutional Uncertainties Identified by the CNWRA in CNWRA 90-003"

Regulatory Guides to Reduce Regulatory Uncertainty

1. "Format and Content of License Application"

2. "Topical Guidelines for the Licensing Support System"

---

* This potential rulemaking would address both regulatory and technical uncertainties.

** This list includes only topics that the staff has decided to prepare staff positions for at this time. Other topics listed in SECY-88-285 will be addressed as part of the Systematic Regulatory Analysis (SRA) process to develop input to the License Application Review Plan (LARP) and future staff positions.