ENCLOSURE A

NUCLEAR MANAGEMENT COMPANY, LLC
KEWAUNEE NUCLEAR PLANT
DOCKET 50-305

November 5, 2003

Letter from Thomas Coutu (NMC)

To

Document Control Desk (NRC)

Responses to Requests for Additional Information and Supplemental Information Regarding LAR 195

American Transmission Company, Facility Study report (Interim), Generator Interconnection Request GIC050 (G165) (MISO # 37239-01), 38 MW Increase at the Kewaunee Nuclear Generation Facility Kewaunee County, Wisconsin, October 13, 2003

AMERICAN TRANSMISSION COMPANY
THE ENERGY ACCESS COMPANY

Facility Study Report
(Interim)

Generator Interconnection Request GIC050 (G165)
(MISO #37239-01)
38 MW Increase at the Kewaunee Nuclear Generation Facility
Kewaunee County, Wisconsin

October 13, 2003

American Transmission Company, LLC
Robert L. Krueger

Generation Interconnection Request GIC050
Facility Study

Table of Contents

This page intentionally left blank.

I. Summary

Purpose

This report is a Facility Study for Generation Interconnection Request (GIR) #GIC050 (G165) [MISO #37239-01]. The purpose of this Facility Study is to evaluate the transmission facilities that will be required for a 38 MW increase of an existing nuclear generation unit, which is connected to an existing 345 kV substation owned by the American Transmission Company (ATC). The generation facility is located in Kewaunee County, Wisconsin. The increased generation will normally be in a base load mode of operation. The additional capacity will be implemented in two stages: The requested in-service date for the first 10 MW of increase is scheduled for May 2003 and the requested in-service date for the remaining 28 MW of increase is scheduled for March 2004. All discussion of "GIC050" in this report refers to the full 38 MW of increased capacity of the existing generator.

This study will identify stability limits that may be violated by the addition of GIC050. If any stability problems are found, solutions for resolving these problems are presented. Since this is an up-rate to an existing facility, the Generator will not be adding any additional fault current contributions to the system. Therefore, a short circuit analysis will not be necessary for this request. A power flow analysis is also not required for this study since a Transmission Service Request (TSR #75000494) has been submitted by the Generator on the MISO OASIS.

ATC has determined, in its sole judgment, that five Generator Interconnection Requests (GIRs) with earlier queue positions may impact GIC050 study results. These requests are GIC007, GIC010, GIC015, GIC027, and GIC034 and are considered to be competing generators for this study request. This study included the competing generators and any required system upgrades identified in the studies performed for these requests.

If any of these requests do not result in the proposed generators and required facilities being constructed in accordance with those requests, the study results set fourth in this report may change and further restudy of this interconnection request may be required at the Generator's expense. Consequently, facilities identified in this report as being required for the increase in the proposed generation (GIC050), may change depending on the results of any restudy. Due to the early in-service date of this generator, two scenarios for GIC050 were studied. The first scenario looks at the in-service with all competing generators included in the model (2005). The second scenario looks at the in-service without any other competing generators modeled (2004). Public information related to GIC007, GIC010, GIC015 GIC027 and GIC034 can be found via the MISO web site at http://www.MidwestISO.org

The study results are based on data provided by the Generator and other ATC system information available at the time the study was performed. If there are any significant changes in the Generator's data or subsequent ATC transmission system development plans, the results of this study may change significantly. This request is subject to restudy for these reasons. The Generator is responsible for communicating any significant generation facility data changes in a timely fashion to ATC prior to commercial operation.

There are stability and thermal issues with the existing Edgewater, Kewaunee, and Point Beach generation facilities that are presently addressed through operating restriction procedures. These existing operating restriction procedures will need to remain in effect. Additional study work may be required to address changes in the current operating guides. These studies would be performed outside of scope of this study.

The GIC034 Facility Study found that a large portion of the ATC system exhibits unacceptable damping for certain breaker failure scenarios when all competing generator requests (GIC007, GIC010, GIC011, GIC015, GIC027 and GIC034), are connected and are generating under light load conditions (50% of system peak load). The damping problems are wide spread and effects most generators in the northeastern part of the ATC system. Through extensive analysis with the GIC034 study, it was determined that GIC034 would be required to have an operating restriction that would only allow the plant to operate during a higher load periods. The operating restriction for GIC034 states that the Generator will be allowed to operate only when the ATC system load is greater than 70% of system peak load (approximately 8320 MW). This is assuming that all other competing generators are in operation and all other local generation is also generating at maximum capacity. Since the initial study was performed for GIC034, GIC011 has been withdrawn from the ATC generation interconnection queue. Additional studies will be performed to determine if the operating restrictions for GIC034 can be modified or eliminated as a result of this withdrawal. Depending on the outcome of the additional study work for the competing generators, GIC050 may have similar operating restrictions as GIC034 when all competing generators are connected and operational on the ATC system.

For all stability cases used in this study, the study generation (Including GIC050 and all other generation in the MISO/ATC Generation Interconnection Queue that has been determined as competing) is typically dispatched at 100% of total capacity. The study generation is dispatched with 25% of the net output of each facility sent to NSP (Northern States Power) area and 75% sent to CE (Commonwealth Edison) area. Additionally, all pertinent existing generation facilities, in close proximity to the study generation that is not already dispatched in the case, are turned on and dispatched in the same manor (i.e. Edgewater, South Fond du Lac, Port Washington, Point Beach, Columbia, and Weston). Required facilities and plant operating restrictions identified in this study could be influenced by several factors including but not limited to the following; dispatch of the study generation, dispatch of the existing generation, completion of transmission projects, and ATC system load level. Any variation of these factors could influence the operating restrictions or projects identified as required in this study.

The initial Impact Study performed for this generator on December 12, 2002 did not reveal any system impacts for the first 10 Megawatt increase for GIC050 (currently scheduled for May 2003). However, 345 kV bus voltage limitations and base Megawatt capacities at the Kewaunee and Point Beach generation stations were not known to ATC Stability and Special Studies until the beginning of the facilities portion of this request. The study model has been modified so that the 345 KV bus voltages at Point Beach and Kewaunee generation stations are maintained within the "preferred range" as specified by these generators. The model was also modified to include the corrected base megawatt capacities of the Kewaunee and Point Beach generators. It has been determined by ATC that since the first 10 MW increase has been previously granted to the generator, they will be allowed to operate at their base net megawatt output level plus the

previously granted 10 MW increase, regardless of the study findings. The discussion of this study will focus on the problems found with the additional 28 MW of capacity as well as any pre-existing issues.

Even though a short circuit analysis was not required at the time that this study was performed, breakers found overdutied due to existing system conditions from the competing generator studies will need to be replaced regardless if GIC050 proceeds with the interconnection process. The GIC010 study found eleven breakers overdutied under existing system conditions; seven 138 kV breakers and four 69 kV breakers. These eleven breakers are to be replaced with breakers with higher interrupting capabilities before any new generators are placed in service. Since this study is for a capacity increase of an existing generator and the actual generator is not being changed from the original unit, and fault current contribution from GIC050's generator will not increase or decrease from it's current level, these over-dutied breakers will not be required to be replaced prior to GIC050 being placed in service.

This executive summary provides a listing of the Required System Upgrades and the Optional System Upgrades associated with GIC050.

Interconnection Facilities For GIC050

The GIC050 request is a power capacity increase for an existing generating facility. New interconnection facilities will not be required.

Required System Upgrades Due to Pre-Existing Issues. (2004 In-service Date, GIC050 and Competing Generators Not Included).

This portion of the study did not include earlier queue Generation Interconnection Requests GIC007, GIC010, GIC015, GIC027 and GIC034. System Upgrades identified as required for pre-exisitng issues must be performed whether or not the proposed GIC050 generation is installed. These System Upgrades must be completed prior to the commercial operation of the final capacity increase scheduled for GIC050 in March 2004. These required System Upgrades are listed in Table I.1 and shown in Figure I.1.

The total estimated cost of all Required System Upgrades due to pre-existing issues is $1.748M. The cost of these Required System Upgrades, is the responsibility of ATC because they are necessary regardless of GIC050 being placed in service.

Seven breaker failure contingencies were found to have unacceptable system stability results without any generation modeled on the system. Four breakers will be required to be replaced at the North Appleton substation and three relays will need to be modified at the Rocky Run substation in order to meet the critical clearing time requirements. However, due to the lack of time before the additional capacity of the generator is implemented, a Special Protection Scheme (SPS) can be implemented at the North Appleton substation to address the short clearing times seen at this location. This SPS is a temporary solution until breaker replacements can be scheduled to be completed. Additional studies show that even-though these pre-existing issues do not meet current ATC planning criteria for stability; they do meet NERC Category C planning

standards for breaker failure. Therefore, the existing generators will not be required to reduce generation before these issues can be corrected. These issues will need to be corrected prior to instituting the final 28 MWs of the requested 38 MWs of capacity for GIC050. **All of these items are pre-existing issues and will be corrected by ATC.**

Required System Upgrades Due to Pre-Existing Issues. (2005 In-service Date, Competing Generators Included Only).

Due to changes in competing generators and the withdrawal of one competing generator, additional studies need to be completed and will be presented in a later Facilities Study report.

Required System Upgrades Due to Pre-Existing Issues. Breaker Interrupting Ratings Found Deficient for GIC010 Short Circuit Study.
GIC010 Short Circuit study found eleven breakers with interrupting ratings less than the available fault current under existing system conditions. Since GIC050 generator is in close proximity of the GIC010 generator, these System Upgrades are required whether or not the proposed GIC050 generation is installed. These upgrades should do not have to be completed prior to the commercial operation of the unit that is scheduled for March 2004. These upgrades are listed in Table I.3.

The total cost estimate of all Required System Upgrades due to pre-existing issues is $3.828M. The cost of these upgrades is the responsibility of ATC since these upgrades are necessary regardless of GIC050 being placed in service.

Required System Upgrades After the Addition of GIC050 (2004 In-service Date, No Competing Generators Included)

Required System Upgrades will need to be implemented prior to commercial operation of the generator for any issues found with either the stability or short circuit analysis. This portion of the study did not include earlier queue Generation Interconnection Requests GIC007, GIC010, GIC015, GIC027 and GIC034.

With the addition of the GIC050 proposed generation increase, no system modifications will be required for either stability or short circuit. All issues identified with the added capacity of the generation are pre-existing and will be addressed by ATC prior to the implementation of the final 28 MW of capacity for GIC050. However, damping issues continue to remain a problem at both Point Beach and Kewaunee generation stations for primary fault scenarios with a prior line outage.

This study will not address any modifications to the current operating guides for various line outages. Additional study work is scheduled for the end of October with the updated capacities of both Point Beach and Kewaunee to determine any changes that may be required with the current operating guides. It is unknown at this time if the operating restrictions will be more or less restrictive to correct damping issues seen on the system for these issues. At the very minimum, the operating guides will need to remain in effect until new guides can be written. All

restrictions in the current guides continue to apply to generation levels at the time the current guides were written.

Additional study work was performed with Power System Stabilizers (PSSs) implemented at the Point Beach generation station. These studies demonstrated that most oscillations can be addressed through the implementation of stabilizers at the Point Beach generation station. Since the stabilizers are in the process of being installed at Point Beach, ATC strongly encourages completing the implementation of these stabilizers to decrease the oscillations imposed on the transmission system by the Point Beach and Kewaunee generators under certain line outage situations. The use of these stabilizers will likely reduce the stability operating restrictions that the generators have in place for certain line outages.

Stability problems identified in this summary are required to be resolved before GIC050 can interconnect to the ATC system. The financing costs associated with any ATC stability or short circuit related upgrades would be the responsibility of the Generator. The costs associated with any required 3rd party equipment upgrades due to GIC050 are the responsibility of the Generator and would have to be resolved with the corresponding equipment owner.

Operating Restrictions Under Certain Conditions
In general, GIC050 will not have a load level operating restriction when all of the competing generators are not present on the ATC system. However, reductions in output for GIC050 will be required for certain prior outage scenarios that take into account the possibility of a fault on a transmission line on ATC's system when another element is previously outaged. Existing stability and thermal operating guides will continue to remain in effect until additional studies are completed to update the current operating guides. Plant operating restrictions identified in these studies could be influenced by several factors including but not limited to the following; dispatch of the study generation, dispatch of the existing generation, completion of transmission projects, and ATC system load level. Any variation of these factors could influence the operating restrictions identified in this section.

NOTE: THE ABOVE LISTED OPERATING LIMITATIONS MAY BE CHANGED, MODIFIED OR AMENDED IF ANY OF THE COMPETING GENERATING REQUESTS FAIL, FOR WHATEVER REASON, TO INTERCONNECT TO ATC'S SYSTEM PRIOR TO THE TIME THAT THE PROPOSED GENERATION IN REQUEST GIC050 SEEKS INTERCONNECTION TO ATC'S SYSTEM OR IF OTHER ASSUMPTIONS INCLUDED AS PART OF THE STUDIES PROVE TO BE IN ERROR OR ARE CHANGED, MODIFIED OR AMENDED.

Required System Upgrades After the Addition of GIC050 (2005 In-service Date, All Competing Generators Included)

Due to changes in competing generators, additional studies need to be completed and will be presented in a later Facilities Study.

Cost Estimate Accuracy: Many of the estimates provided in this report contain assumptions. Assumptions are necessary to keep the cost of the study as low as possible for the Generator. If the Generator so chooses, ATC could improve the accuracy of the estimates by performing additional engineering design work. The amount of engineering work required to produce these cost estimates could be significant. Factors such as the specific request and the complexity of the projects, could add additional hours of engineering design work.

Optional System Upgrades
The customer waived the typical thermal analysis because Transmission Service Requests had already been submitted on the MISO OASIS. The Transmission Service Requests associated with this proposed facility are MISO OASIS #75005216 and 75018478. Since a thermal analysis was not performed, Optional System Upgrades will not be presented in this report.

Table I.1: Required Upgrades, Pre-Existing System, Without GIC050, (Competing Generators Not Included, 2004 In-Service Date).

Equipment	Equipment Replacements/Changes				Cost Estimates
	Circuit Breaker				
	Type	Rating	Relaying	Communication	
Rocky Run					
BS6-1			Reset Existing		$500
BS1-8			Reset Existing		$500
BS8-V			Reset Existing		$500
North Appleton					
6814	2-cycle (IPO)	345kV, 63 kA	SEL-352		$255K
6812	2-cycle (IPO)	345kV, 63 kA	SEL-352		$255K
6832	2-cycle (IPO)	345kV, 63 kA	SEL-352		$255K
BS23-3	2-cycle (IPO)	345kV, 63 kA	SEL-352		$255K
Miscellaneous Relaying, Engineering and Construction Costs					$723K
Optional Bus Sectionalizing Special Protection Scheme					$5K
				Total Cost	$1.748M

Table I.2: Required Upgrades, Pre-Existing System, Without GIC050, (Competing Generators Included, 2005 In-Service Date). (To Be Completed)

Equipment	Equipment Replacements/Changes				Cost Estimates
	Circuit Breaker				
	Type	Rating	Relaying	Communication	
TBD					
				Total Cost	TBD

Table I.3: Required Upgrades, Pre-Existing System, Breakers Required to be Replaced From GIC010 Fault Study.

Equipment	Equipment Replacements/Changes				Cost Estimates
	Circuit Breaker		Relaying	Communication	
	Type	Rating			
Columbia					
3014-S	3-cycle	138kV, 40 kA			$348K
Edgewater					
781-S	3-cycle	138kV, 40 kA			$348K
854-S	3-cycle	138kV, 40 kA			$348K
843-S	3-cycle	138kV, 40 kA			$348K
861-S	3-cycle	138kV, 40 kA			$348K
865-S	3-cycle	138kV, 40 kA			$348K
North FDL					
307-S	3-cycle	138kV, 40 kA			$348K
South FDL					
354-S	3-cycle	138kV, 40 kA			$348K
356-S	3-cycle	138kV, 40 kA			$348K
352-S	3-cycle	138kV, 40 kA			$348K
331-S	3-cycle	138kV, 40 kA			$348K
				Total Cost	$3.828M

Table I.4: Required System Upgrades due to GIC050 (No Competing Generators Included).

Equipment	Equipment Replacements/Changes				Cost Estimates
	Circuit Breaker		Relaying	Communication	
	Type	Rating			
None					
				Total Cost	$0

Table I.5: Required System Upgrades due to GIC050 (Competing Generators Included). (To Be Completed)

Equipment	Equipment Replacements/Changes				Cost Estimates
	Circuit Breaker		Relaying	Communication	
	Type	Rating			
TBD					
				Total Cost	TBD

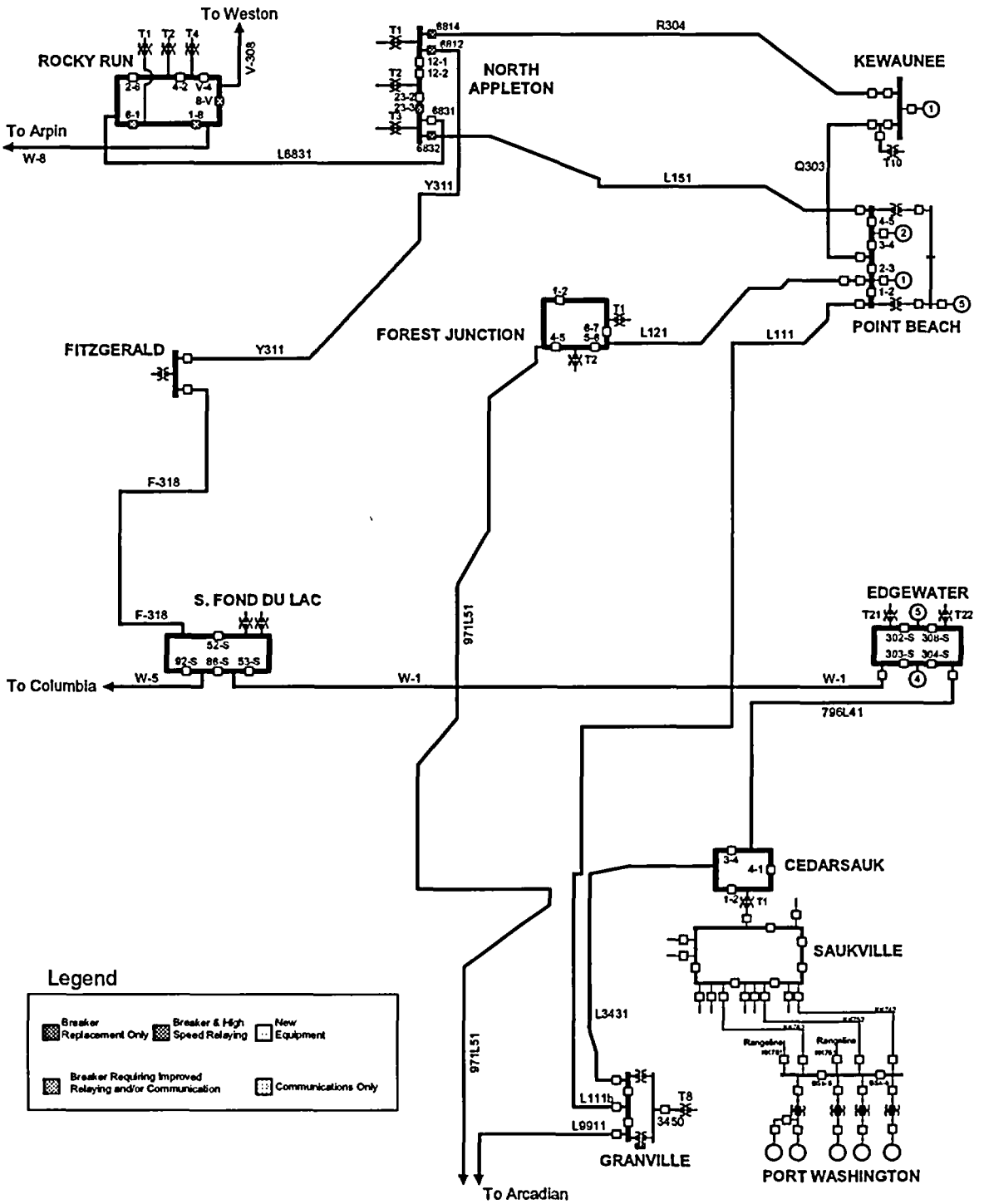

Figure I.1: One-Line Diagram of the System Without GIC050, No Competing Generators Included.

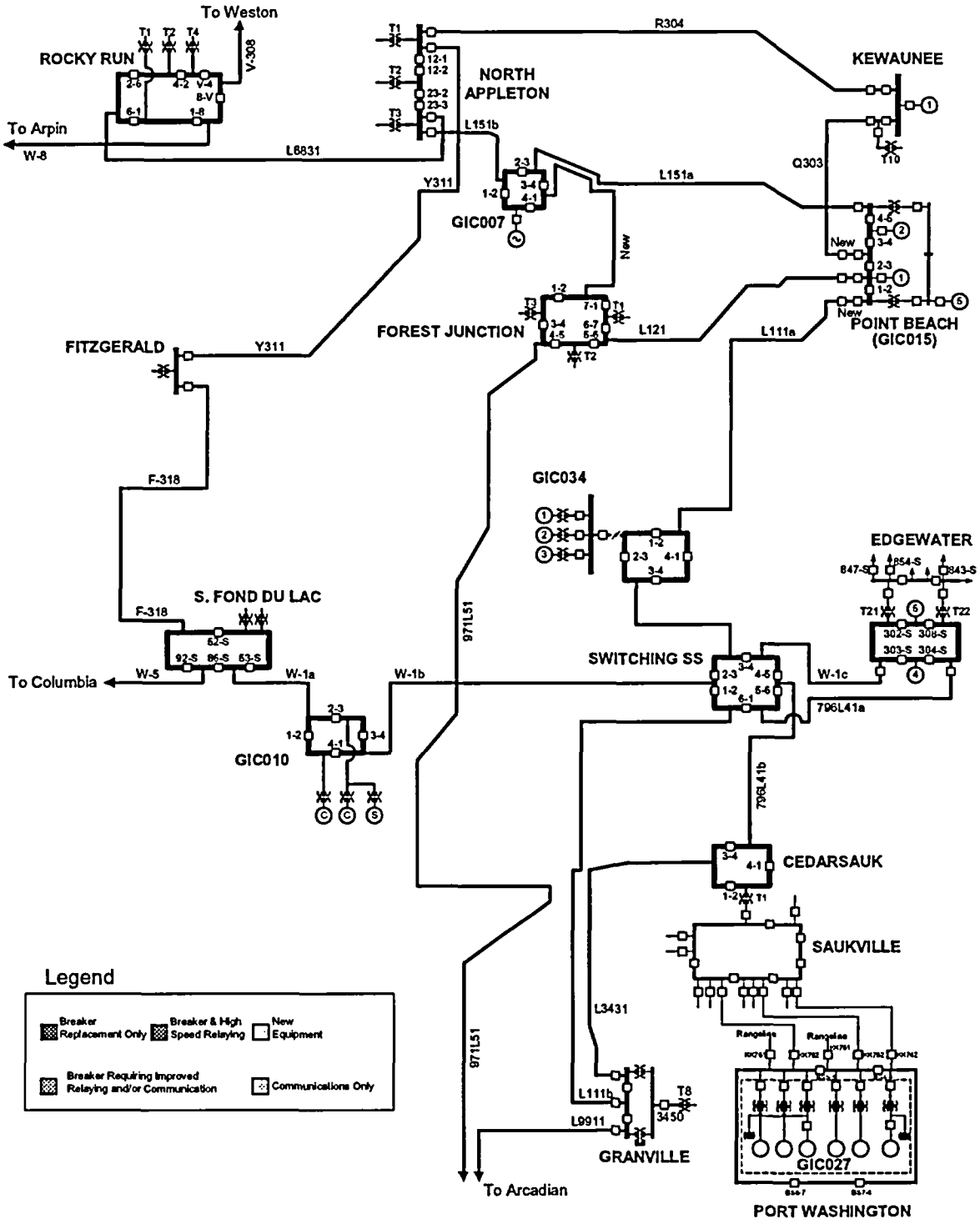

Figure I.2: One-Line Diagram of the System With GIC007, GIC010, GIC015, GIC027, and GIC034 Competing Generators Included.

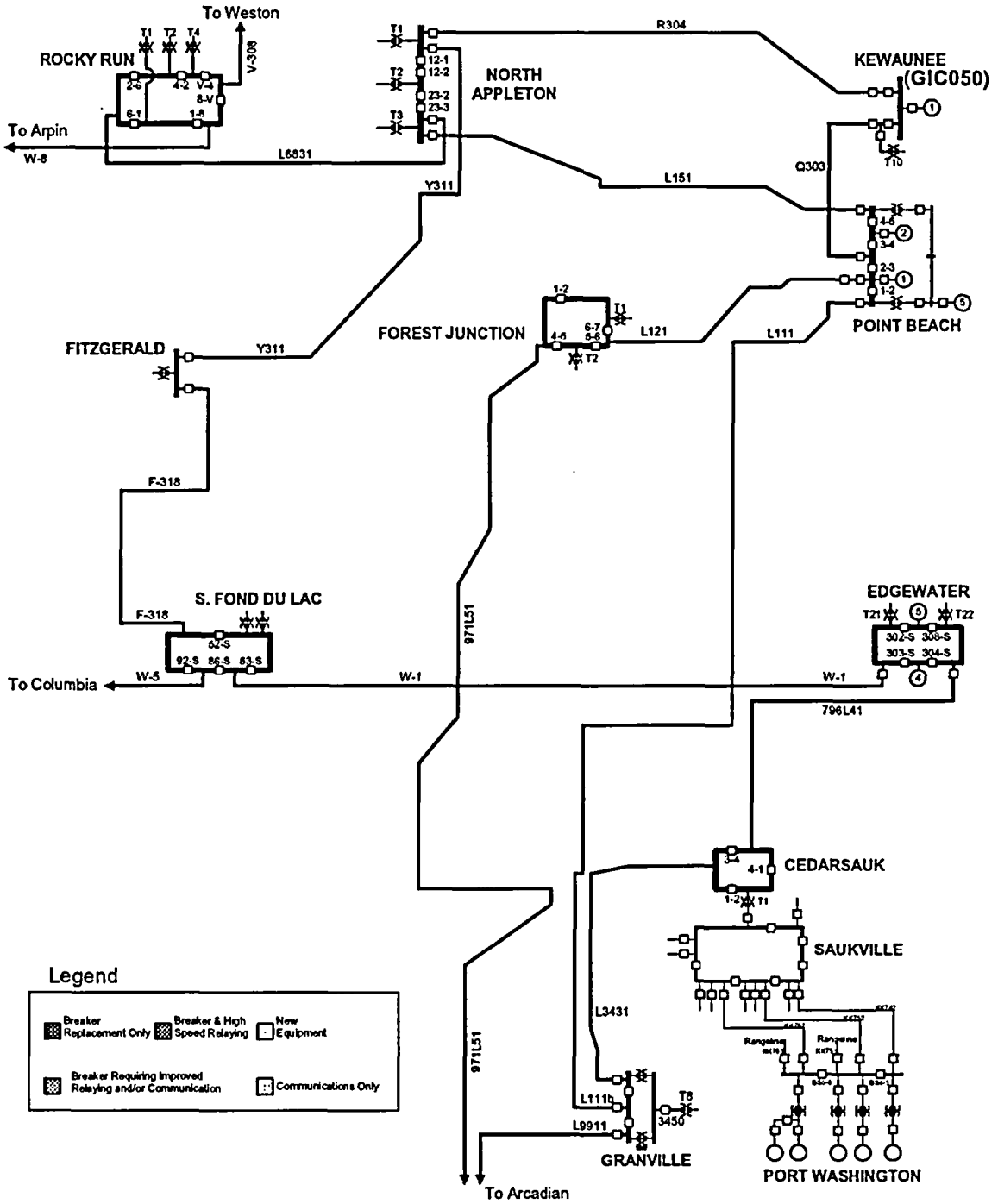

Figure I.3: One-Line Diagram of the System With GIC050, GIC007, GIC010, GIC015, GIC027, and GIC034 Competing Generators Not Included.

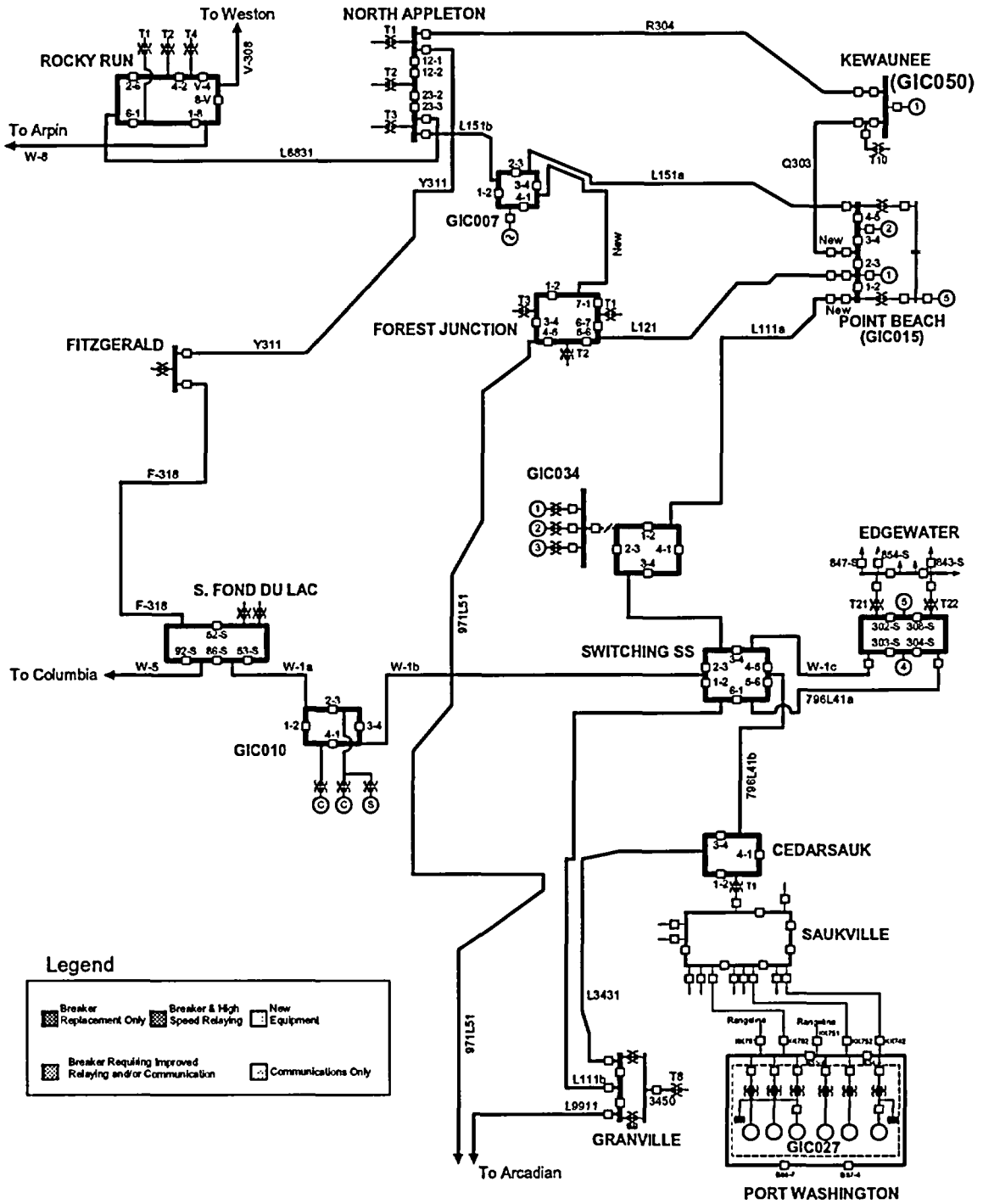

Figure I.4: One-Line Diagram of the System With GIC050, GIC007, GIC010, GIC015, GIC027, and GIC034 Competing Generators Included.

II. Stability Analysis

Base Case Assumptions
The 2004 MMWG stability base case was used to create a 2004 light-load (50%) case and a 2004 shoulder-load (70%) case for the stability study. It was determined by ATCLLC that the 70% case is representative of cool summer, and warm spring/fall periods and would give the generator a greater flexibility of operation. The higher load case was used where appropriate. This study includes authorized ATC transmission system projects that are planned to be in service by June 2005. This case contains dynamic model information for generators throughout MAIN, as well as a significant portion of the continental United States. ATC determined in its sole judgment that five Generator Interconnection Requests with an earlier queue position may impact the GIC050 study results. These requests include GIC007, GIC010, GIC015, GIC027, and GIC034. This study included these facilities and any required system modifications identified in these requests. The Forest Junction project was also included in all scenarios studied.

For all stability cases used in this study, the study generation (Including GIC050 and all other generation in the MISO/ATC Generation Interconnection Queue that has been determined as competing), typically dispatched at 100% of total capacity. The study generation is dispatched with 25% of the net output of each facility is sent to NSP (Northern States Power) area and 75% sent to CE (Commonwealth Edison) area. Additionally, all pertinent existing generation facilities, in close proximity to the study generation, that is not already dispatched in the case is turned on and dispatched in the same manor (i.e. Edgewater, South Fond du Lac, Port Washington, Point Beach, Columbia, and Weston). Required facilities and plant operating restrictions identified in this study could be influenced by several factors including but not limited to the following; dispatch of the study generation, dispatch of the existing generation, completion of transmission projects, and ATC system load level. Any variation of these factors could influence the operating restrictions identified in this study.

Proposed Plant Data
Since this study is an increase in output of the existing generator, the existing models for the generator, exciter and governor were used for the GIC050 generator. The maximum power output of the generator was changed to reflect the increase output of the generator.

The GIC050 generation was modeled for the both cases based on information provided by the customer.

Kewaunee G1 before up rate:
MW output = 559 MW (gross), 535 MW (net)
Aux Loads at the generator terminals: 24 MW, 10.7 MVAR
Kewaunee G1 after up rate:
622 MVA, 18 kV, 185 MVAR (maximum)
MW output = 597 MW (gross), 573 MW (net)
Aux Loads at the generator terminals: 24 MW, 10.7 MVAR

The GSU (generator step-up transformer) remains the same as it is currently modeled in the base case.

Additional information provided by Nuclear Management Company (NMC) caused some additional modifications to the base case. The net megawatt output level of the Point Beach generation station is actually higher than what was studied in the impact portion of this request. Initially, each of the Point Beach generators were modeled with a 505 MW net output to the transmission system. Updated information provided by NMC for the Point Beach generation station is as follows:

Point Beach G1: 545 MW (gross), 522 MW (net)
Aux loads at the generator terminals: 23 MW, 14.25 MVAR
Point Beach G2: 545 MW (gross), 522 MW (net)
Aux loads at the generator terminals: 23 MW, 14.25 MVAR
Aux loads at the CT5 generator terminals: 8.5 MW, 5.27 MVAR (this load is present even without CT5 operating)

Also, it was brought to the attention of ATC that both generation facilities must operate within a preferred voltage range to protect equipment at the generation station. The preferred voltage range for the Kewaunee substation is currently 350-354 kV and the preferred voltage range for the Point Beach substation is 352-354 kV. It was recommended by NMC that both substations should be studied with voltage ranges of 352-354 kV. Therefore, the study was performed with bus voltages at Kewaunee and Point Beach maintained at 352kV and at 354 kV.

Additional studies will be required at the expense of the customer if the study data changes significantly. The new data could worsen or improve the results presented in this report.

Study Criteria
The stability criteria used in this study is the same criteria used for all generation impact studies. All machines modeled in the system must remain stable after a three-phase fault is cleared from any transmission element under the following conditions:

1) Fault cleared in primary time with an otherwise intact system
2) Fault cleared in delayed clearing time (i.e. breaker failure conditions) with an otherwise intact system.
3) Fault cleared in primary clearing time with a pre-existing outage of any other transmission element.

Transient stability studies were performed to determine if the critical clearing times for all pertinent contingencies were less than the maximum expected breaker failure clearing times. Any critical clearing times that were less than the actual breaker failure clearing times would, therefore, be considered unacceptable.

It should be noted that extensive simulations for criteria #2 and #3 were performed for GIC050. Criteria #2 simulations involve a faulted element cleared in delayed time (breaker failure), which is a more severe case compared to Criteria #1. Because of this, Criteria #1 simulations were not examined in great detail for different study scenarios.

The stability simulation results presented in this section are based on the stability criteria stated above. All simulations were performed at light-load (50%) and at shoulder-load (70%) system load levels when necessary. The stability performance in this area during light-load conditions is worse than at higher load levels. This is expected due to the different system conditions the generators see at light load, specifically the longer electrical path from source to load. Therefore the light-load studies were performed to identify the worst-case stability performance in this area, and to identify required upgrades that will protect the transmission system and generation in this area at various load levels. When the results from light-load analysis reveal problems beyond what is correctable by traditional means (e.g. breaker and relay replacements, additional transmission lines, etc.) a should-load case is used in the analysis.

The GIC034 Facility Study found that when GIC007, GIC010, GIC011, GIC015, GIC027 and GIC034 are connected and are generating under with light load conditions (50% peak load), the ATC system will experience severe oscillations with certain breaker failure scenarios. Through extensive analysis in the GIC034 study, it was determined that GIC034 would have an operating restriction that would only allow the plant to operate during a higher load period when all other competing generators are operating. GIC034 will be allowed to operate only when the ATC system load is greater than 70% of system peak load (approximately 8320MW). Because of relative queue position of GIC050 in comparison to GIC034, it was determined that GIC050 would have similar operating restrictions as GIC034 when all competing generators are connected and operational on the ATC system. Therefore, GIC050 was studied using a 70% peak load case.

Three-phase faults were applied at the faulted bus and cleared in progressively longer times to determine the critical clearing time (CCT) necessary to avoid any generating unit becoming unstable after clearing the fault. For example, a CCT of 10 cycles means that one or more generating units became unstable at 10.5 cycles, while all units remained stable at 10 cycles. The CCT is the longest time that fault conditions can be applied under the described condition before being removed by protective equipment for which the units on the system will remain stable.

Summary of Stability Results

Stability Study Scenario – Expected System Before GIC050 with GIC007, GIC010, GIC015, GIC027, and GIC034 Included

Figure A2 in Appendix A shows the one-line diagrams of the transmission system before the addition of GIC050 with the addition of competing generation added to the model. A stability analysis was performed on the expected system with competing generators GIC007, GIC010, GIC015, GIC027 and GIC034 in service to identify the stability performance prior to the addition of GIC050. Any major transmission fixes associated with any of these generators were also included in the stability analysis. This information is contained in the ATCLLC Interconnection Stability Reports for each of these competing requests. Public information related to these study requests can be found via the Interconnections link on the ATCLLC web site at ***http://www.atcllc.com***.

Extensive operating guides existing for the Point Beach and Kewaunee generation facilities. This portion of the study identifies problems with the addition of GIC050 to the transmission system assuming that these guides will not be altered. Additional study work in the facilities portion of the study will be required to assure that the existing generators are not adversely affected by the new generator.

Analysis using the 50% Peak Load Case

Stability Criteria #2 – Intact System, Fault Cleared in Breaker failure Clearing Time

To be completed at a later date.

Stability Criteria #3 – Pre-existing Outage, Fault Cleared in Primary Clearing Time

To be completed at a later date.

Analysis using the 70% Peak Load Case

Stability Criteria #2 – Intact System, Fault Cleared in Breaker failure Clearing Time

To be completed at a later date.

Stability Criteria #3 – Pre-existing Outage, Fault Cleared in Primary Clearing Time

To be completed at a later date.

Stability Study Scenario – Expected System After GIC050 and with GIC007, GIC010, GIC015, GIC027, and GIC034 Included

Figure A3 in Appendix A shows the one-line diagram of the transmission system after the addition of GIC050 and the competing generation. A stability analysis was performed on the expected system with competing generators GIC007, GIC010, GIC015, GIC027 and GIC034 in service to identify the stability performance with the addition of GIC050 and the competing generation. The stability runs were performed using a shoulder-load (70%) case since the results for GIC034 study proved that additional generation in this area would be required to operate at

higher load periods than the standard 50% light-load case normally used for this type of analysis. This information is contained in the ATCLLC Interconnection Stability Reports for each of these competing requests. Public information related to these study requests can be found via the Interconnections link on the ATCLLC web site at *http://www.atcllc.com*.

Extensive operating guides existing for the Point Beach and Kewaunee generation facilities. This portion of the study identifies problems with the addition of GIC050 to the transmission system assuming that these guides will not be altered. Additional study work in the facilities portion of the study will be required to assure that the existing generators are not adversely affected by the new generator.

Analysis using the 70% Peak-Load Case
Stability Criteria #2 – Intact System, Fault Cleared in Breaker failure Clearing Time

To be completed at a later date.

Stability Criteria #3 – Pre-existing Outage, Fault Cleared in Primary Clearing Time

To be completed at a later date.

Stability Study Scenario – Expected System Before GIC050 Only. No Competing Generation Included
Figure A1 in Appendix A shows the one-line diagram of the transmission system before the addition of GIC050 only. A stability analysis was performed on the expected system without GIC050 to identify the stability performance of the existing system prior to the addition of GIC050, currently scheduled to be in-service in March of 2004. This portion of the study removes any re-enforcements identified necessary for the interconnection of competing generators that may have proven to be beneficial for the operation of GIC050 with competing generation added to the system. This information is contained in the ATCLLC Interconnection Stability Reports for each of the competing requests. Public information related to these study requests can be found via the Interconnections link on the ATCLLC web site at *http://www.atcllc.com*.

Extensive operating guides existing for the Point Beach and Kewaunee generation facilities. This portion of the study identifies problems prior to the addition of GIC050 to the transmission system assuming that these guides will not be altered. Additional study work will be required to address any changes in the operating guide as pointed out in this study. Generation operating guides will not be modified at this time.

Analysis using the 50% Peak Load Case
Stability Criteria #2 – Intact System, Fault Cleared in Breaker Failure Clearing Time
Table B11 in Appendix B presents the results for the transmission system prior to the addition of GIC050 only with the Criteria #2 contingencies examined. Table B11 shows that seven contingencies (Items 7, 8, 9, 10, 13, 14, and 15) have clearing times lower than what the existing equipment is currently designed to operate. These clearing time issues are pre-existing and the necessary equipment will be required to be replaced or modified prior to the implementation of

GIC050. ATC System Protection has determined that to be able to obtain the required actual clearing times, existing breaker failure relays at the Rocky Run substation will be required to be modified (Items 13-15) and four breakers at the North Appleton substation need to be replaced (Items 7-10).

While the relay modifications at Rocky Run are relatively easy to accomplish by March of 2004, replacement of the breakers at North Appleton are not feasible by that time. Due to the early in-service date of the generator and due the fact that the problems found at North Appleton are pre-existing, it was decided that a Special Protection Scheme (SPS) would be an excellent short-term solution to the problems seen at this substation (Items 7-10). This SPS is a temporary solution to address the problems at this substation until the necessary circuit breakers can be ordered and be scheduled to be replaced.

As shown in Figure A1, one 345 kV line connects North Appleton to the Point Beach substation (L151), another connects North Appleton to the Kewaunee substation (R304) and a short 345 kV line connects Kewaunee to the Point Beach substation (Q303). Line Q303 is short and has relatively low impedance characteristics. This configuration causes Point Beach and Kewaunee generators to react similarly to various faults on the 345 kV network at or near the North Appleton substation.

A proposed SPS that includes high-speed-sectionalizing of the 345 kV bus would function as follows:

A fault on either the R304 or Y311 345 kV line with a fault location of 10% or less of the line length from the North Appleton substation would open bus tie breaker 12-1 in primary time. Similarly, a fault on either the L151 or L6831 345 kV line with a fault location of 10% or less of the line length from the North Appleton substation would open bus tie breaker 23-3 in primary time. The bus tie breakers would be required to trip for three phase faults on any of the 345 kV lines, regardless if the corresponding line breaker fails in it's operation or not. After sectionalizing the 345 kV bus, ATC System Operations would be required to evaluate the post contingent state of the North Appleton substation and surrounding lines and manually reclose the bus tie breaker(s) upon the determination of the fault.

In the event that breakers 6812 (line breaker protecting line Y-311), 6814 (line breaker protecting line R-304), 6831 (line breaker protecting line 6831), or 6832 (line breaker protecting line L151) fail to operate as required, the required bus tie breaker will open, causing the 345 kV bus to be sectionalized into two separate bus sections. After the bus tie breakers open, the connection that the two bus sections have with each other will change from a near zero impedance to an impedance that includes the 345/138 kV transformers and various 138 kV and 345 kV lines. The impedance from the generator terminals to the fault location increases as a result of this sectionalizing causing a reduction in the acceleration of the generator, and improves overall generator stability and damping. Items 7-10 in Table B11 and B14 show that with the SPS in place, the calculated clearing time for the North Appleton breaker failure scenarios improves by 2 or more cycles.

Table II.1 shows a list of the equipment that will be required to be modified for the existing system, prior to the addition of GIC050 to the ATC system.

The "Actual" clearing times shown as "≤" for faults are not known at this time but are believed to be within acceptable limits of actual existing equipment operation.

Stability Criteria #3 – Pre-existing Outage, Fault Cleared in Primary Clearing Time

Table B12 in Appendix B presents the results for the transmission system prior to the addition of GIC050 only with the Criteria #3 contingencies examined. Table B12 shows that all but two contingency scenarios examined have clearing times within acceptable limits of the system equipment. These contingencies were expected to produce unfavorable results and reaffirm the need for an operating guide for the generating units in that area of the system. Clearing times shown as "≤" are not known at this time but are believed to be within acceptable limits of actual equipment operation.

Item	Present CCT Requirement	Action Necessary
Table B11, Item 13	RRN BF time (14.5)<17.5 cycles	Reset existing RRN BF Relay to new clearing time. *
Table B11, Item 14	RRN BF time (16.5) <17.0 cycles	Reset existing RRN BF Relay to new clearing time. *
Table B11, Item 15	RRN BF time (15.0) <18.0 cycles	Reset existing RRN BF Relay to new clearing time. *
Table B11, Item 7	NAP BF time (11.5) <12.55 cycles	Replace existing NAP 6814, 3-cycle breaker, with a 2-cycle gas breaker. Replace existing BF relay with SEL352 BF relay. **
Table B11, Item 8	NAP BF time (10.5) <12.6 cycles	Replace existing NAP 6812, 3-cycle breaker, with a 2-cycle gas breaker. Replace existing BF relay with SEL352 BF relay. **
Table B11, Item 9	NAP BF time (11.5) <12.55 cycles	Replace existing NAP 6832, 3-cycle breaker, with a 2-cycle gas breaker. Replace existing BF relay with SEL352 BF relay. **
Table B11, Item 10	NAP BF time (10.5) <10.55 cycles	Replace existing NAP 6832 and 23-3, 3-cycle breakers, with 2-cycle gas breakers. Replace existing BF relay with SEL352 BF relay. **

- BF = Breaker Failure
- RRN = Rocky Run
- NAP = North Appleton
- CCT = Critical Clearing Time - (Required Clearing Time in Cycles) < Present Clearing Time in Cycles
- ** A Special Protection Scheme with High Speed Sectionalizing of the North Appleton 345 kV bus is a short-term solution to replacing these breakers. The breakers and relays will be required to be replaced as a long-term solution to these issues.
- *Pre-existing

Table II.1 Required Equipment Replacement for Expected System Before GIC050 Only.

Damping – All Contingency Scenarios

All contingencies studied at 50% load level were studied without power system stabilizers (PSSs) modeled on the Point Beach or Kewaunee generators. Currently, Point Beach is in process of installing PSSs on the generators. Since a vast majority of the work is completed for these stabilizers, it was decided that if the initial response of the studies indicated a need for the stabilizers, they would be modeled at Point Beach.

Several Criteria #3 contingencies exhibited less than acceptable damping (Table 15). While a few of these contingencies have an operating guide to address known oscillation problems associated with unit generation level, several contingencies are not addressed through the use of guides. Figures II.1 through II.3 show the damping problems seen in this area with prior outage scenarios without the addition of Power System Stabilizers (PSSs) modeled with the Point Beach generators.

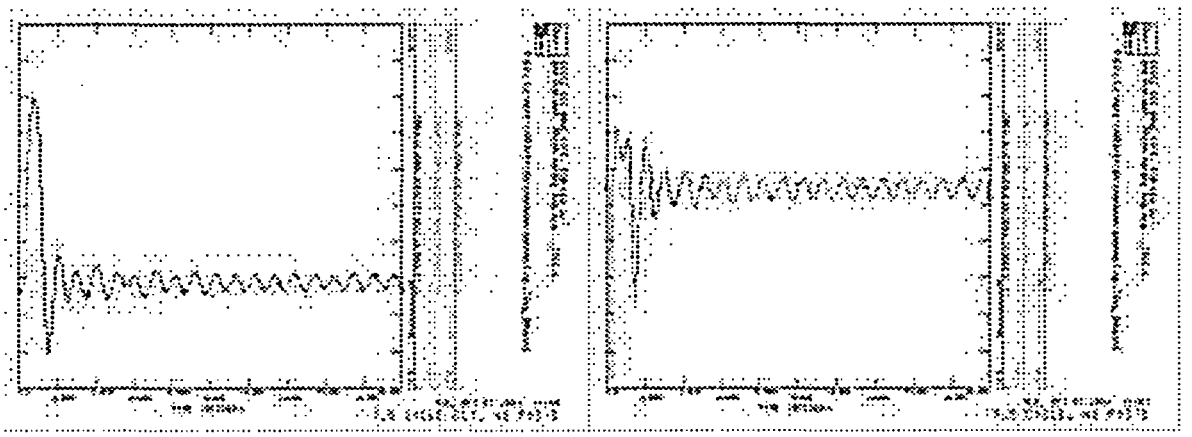

(Generator Angle) *(Generator Electrical Power)*

Figure II.1 Damping for Prior Outage Contingency 1 (Table B12)
(Point Beach – Kewaunee Out, Point Beach – North Appleton Fault)
No PSSs Modeled for Point Beach

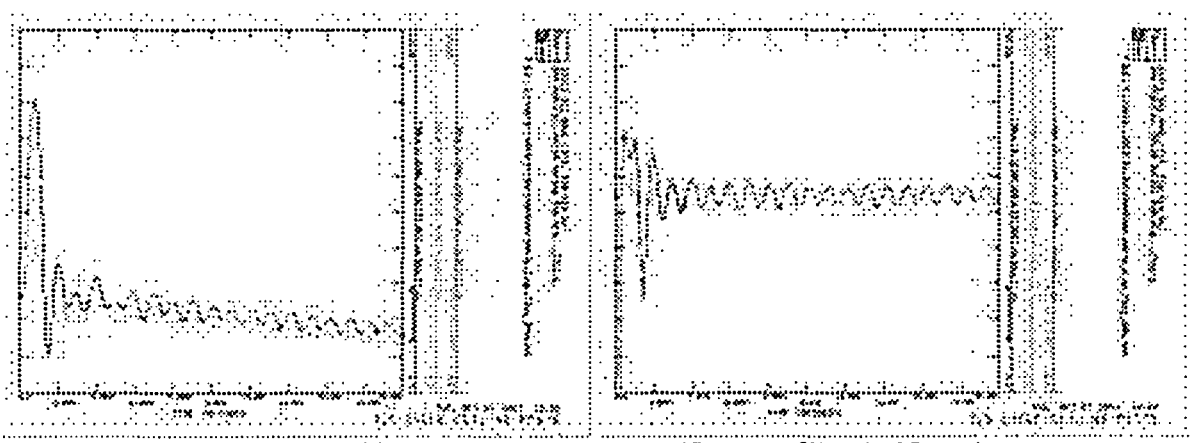

(Generator Angle) *(Generator Electrical Power)*

Figure II.2 Damping for Prior Outage Contingency 6 (Table B12)
(Point Beach – Kewaunee Out, Point Beach – Forest Junction Fault)
No PSSs Modeled for Point Beach

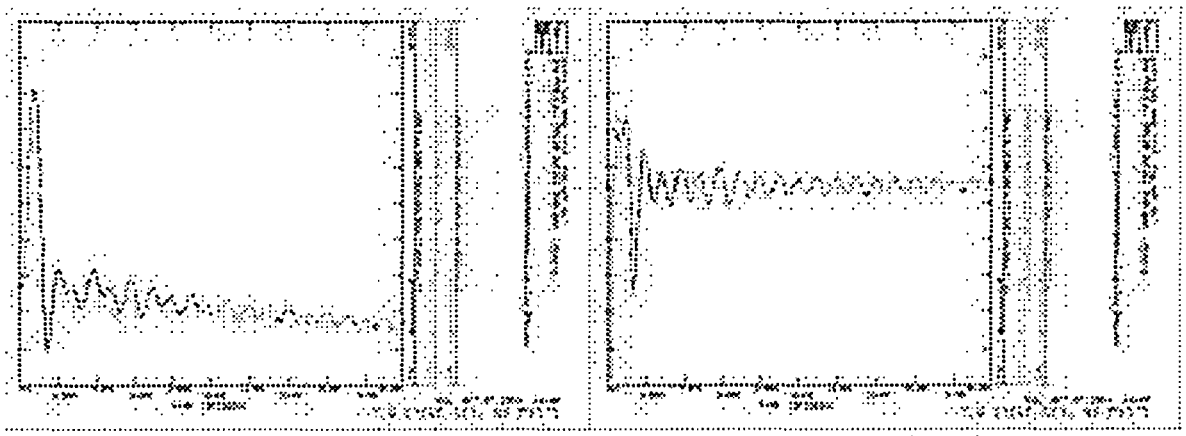

(Generator Angle) *(Generator Electrical Power)*

Figure II.3 Damping for Prior Outage Contingency 11 (Table B12)
(Point Beach – North Appleton Out, Point Beach – Granville Fault)
No PSSs Modeled for Point Beach

Additional simulations were run with PSSs modeled at Point Beach to demonstrate the impact that the PSSs have on system stability with the GIC050 up-rate (Figures II.5, II.7 and II.9). Implementation of PSSs at Point Beach with the GIC050 up-rate modeled produced favorable damping response to various fault scenarios. It was decided that since the damping looked acceptable with the GIC050 up-rate that additional simulations to demonstrate the effectiveness of the PSSs prior to the up-rate of GIC050 would not be necessary. Through several simulations with and without the PSSs modeled on the Point Beach generators, the addition of the PSSs would most likely reduce or eliminate stability operating restrictions currently in place for both the Kewaunee and Point Beach generators. See the next section for plots and discussion regarding the implementation of PSSs at Point Beach generation station with the implementation of GIC050 generation up-rate.

Additional studies will be required to determine any changes that may be necessary for the existing operating guides for Point Beach and Kewaunee generation stations. Initial studies performed for this request indicate that a potential exists for additional operating restrictions may be required for Point Beach and Kewaunee to address the current capacity and various line outage scenarios. These studies are scheduled to begin by November of 2003 and should be completed by the end of 2003.

Stability Study Scenario – Expected System After GIC050 Only. No Competing Generation Included

Figure A4 in Appendix A shows the one-line diagram of the transmission system after the addition of GIC050 only. A stability analysis was performed on the expected system with the addition of GIC050 to identify the stability performance for March of 2004. This portion of the study removes any re-enforcements identified necessary for competing generators that may have proven to be beneficial for the operation of GIC050 with competing generation added to the system. This information is contained in the ATCLLC Interconnection Stability Reports for each of the competing requests. Public information related to these study requests can be found via the Interconnections link on the ATCLLC web site at ***http://www.atcllc.com***.

Extensive operating guides exist for the Point Beach and Kewaunee generation facilities. This portion of the study identifies problems with the addition of GIC050 to the transmission system assuming that these guides will not be altered. Additional study work will be required to address any changes in the operating guide as pointed out in this study. Generation operating guides will not be modified at this time.

Analysis using the 50% Peak Load Case
Stability Criteria #2 – Intact System, Fault Cleared in Breaker failure Clearing Time
Table B14 in Appendix B presents the results for the transmission system with the addition of only GIC050, with the Criteria #2 contingencies examined. Table B14 shows that seven contingencies (Items 7, 8, 9, 10, 13, 14, and 15) have clearing times lower than what the existing equipment is currently designed to operate. These clearing time issues are pre-existing and the necessary equipment will be required to be replaced or modified prior to the implementation of GIC050. ATC system protection has determined that to be able to obtain the required actual clearing times, existing breaker failure relays at Rocky Run substation will be required to be reset (Items 13-15) and four breakers need to be replaced at the North Appleton substation (Items 7-10).

The modifications discussed for the system prior to the addition of GIC050 will be required to be implemented prior to the additional capacity increase associated with GIC050. The relay modifications will be required to be implemented, as will the Special Protection Scheme (SPS). As noted earlier, the SPS is a temporary solution to the problems at the North Appleton until the necessary breakers can be ordered and scheduled for replacement.

The "Actual" clearing times shown as "≤" for faults are not known at this time but are believed to be within acceptable limits of actual existing equipment operation.

Stability Criteria #3 – Pre-existing Outage, Fault Cleared in Primary Clearing Time

Table B15 in Appendix B presents the results for the transmission system with the addition of GIC050 only with the Criteria #3 contingencies examined. Table B15 shows that all but two contingency scenarios examined have clearing times within acceptable limits of the system equipment. These contingencies were expected to produce unfavorable results and reaffirm the need for an operating guide for the generating units in that area of the system. Clearing times shown as "≤" are not known at this time but are believed to be within acceptable limits of actual equipment operation.

Damping – All Contingency Scenarios
All contingencies studied at 50% load level were studied without power system stabilizers (PSSs) modeled on the Point Beach or Kewaunee generators. Currently, Point Beach generation station is in process of installing PSSs. Since a vast majority of the work is completed for the implementation of these stabilizers, it was decided that the stabilizers would be modeled if the initial response of the studies indicated a need for the stabilizers.

Several Criteria #3 contingencies exhibited less than acceptable damping (Table 15). While a few of these contingencies have an operating guide to address known oscillation problems

associated with unit generation level, several contingencies are not addressed through the use of guides. Figures II.4 through II.9 show the damping problems seen in this area with prior outage scenarios with and without the addition of Power System Stabilizers (PSSs) installed on the Point Beach generators.

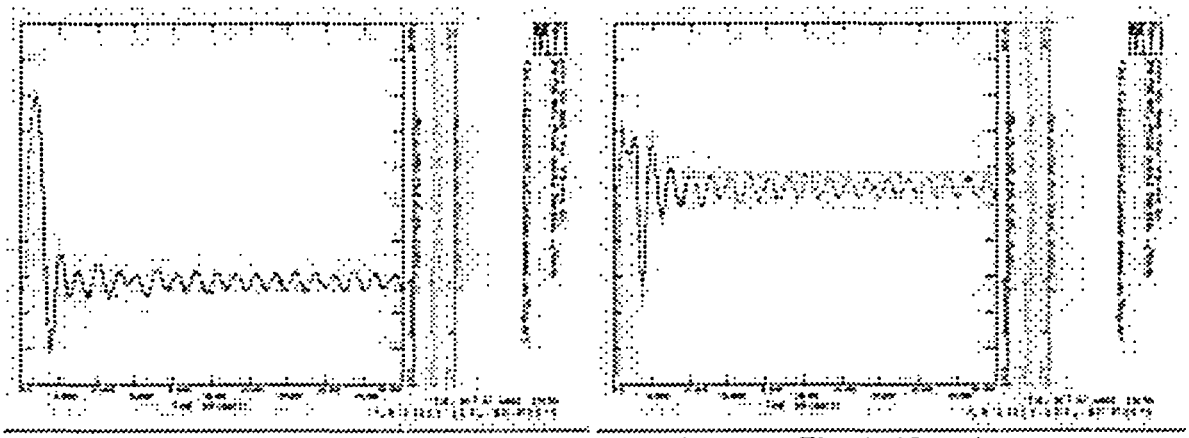

(Generator Angle) *(Generator Electrical Power)*

Figure II.4 Damping for Prior Outage Contingency 1 (Table B12)
(Point Beach – Kewaunee Out, Point Beach – North Appleton Fault)
No PSSs Modeled for Point Beach

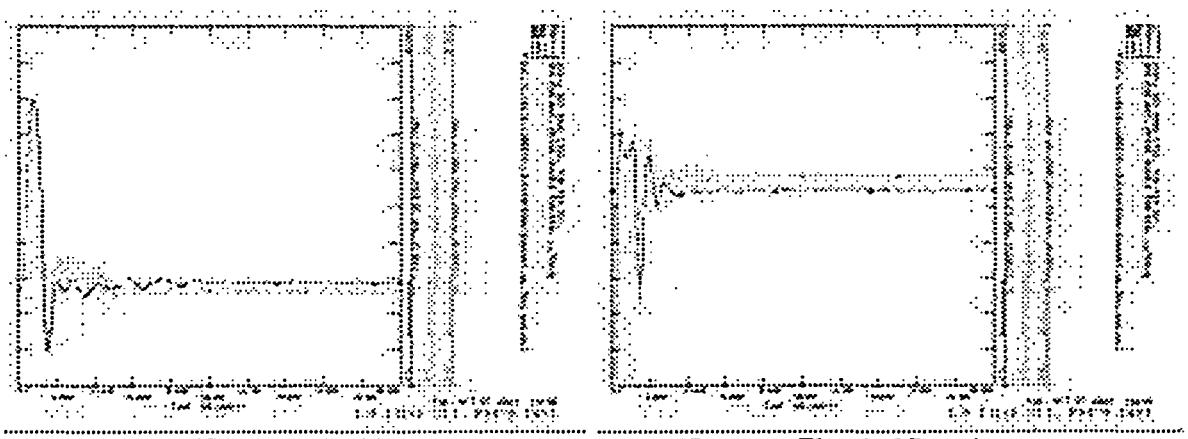

(Generator Angle) *(Generator Electrical Power)*

Figure II.5 Damping for Prior Outage Contingency 1 (Table B12)
(Point Beach – Kewaunee Out, Point Beach – North Appleton Fault)
PSSs Modeled for Point Beach

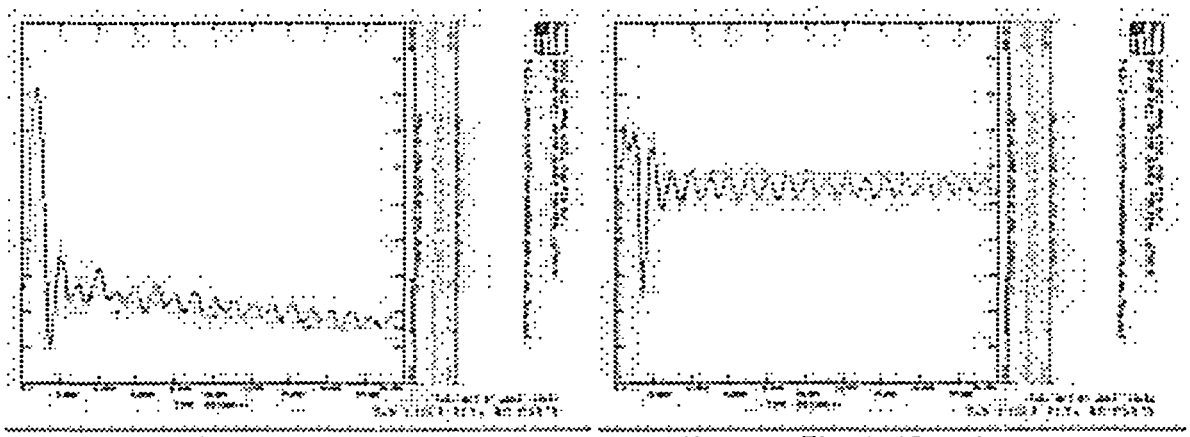

(Generator Angle) *(Generator Electrical Power)*

Figure II.6 Damping for Prior Outage Contingency 6 (Table B12)
(Point Beach – Kewaunee Out, Point Beach – Forest Junction Fault)
No PSSs Modeled for Point Beach

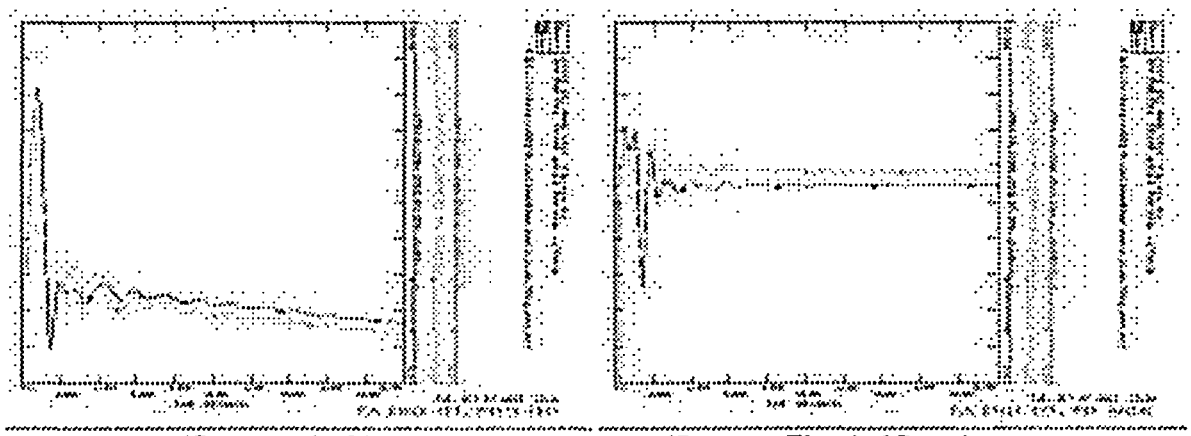

(Generator Angle) *(Generator Electrical Power)*

Figure II.7 Damping for Prior Outage Contingency 6 (Table B12)
(Point Beach – Kewaunee Out, Point Beach – Forest Junction Fault)
PSSs Modeled for Point Beach

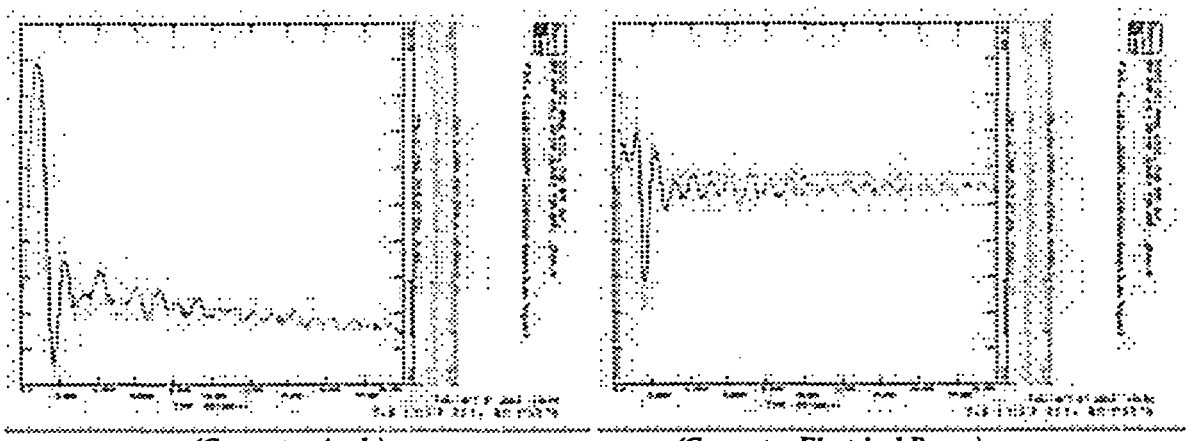

(Generator Angle) *(Generator Electrical Power)*

Figure II.8 Damping for Prior Outage Contingency 11 (Table B12)
(Point Beach – North Appleton Out, Point Beach – Granville Fault)
No PSSs Modeled for Point Beach

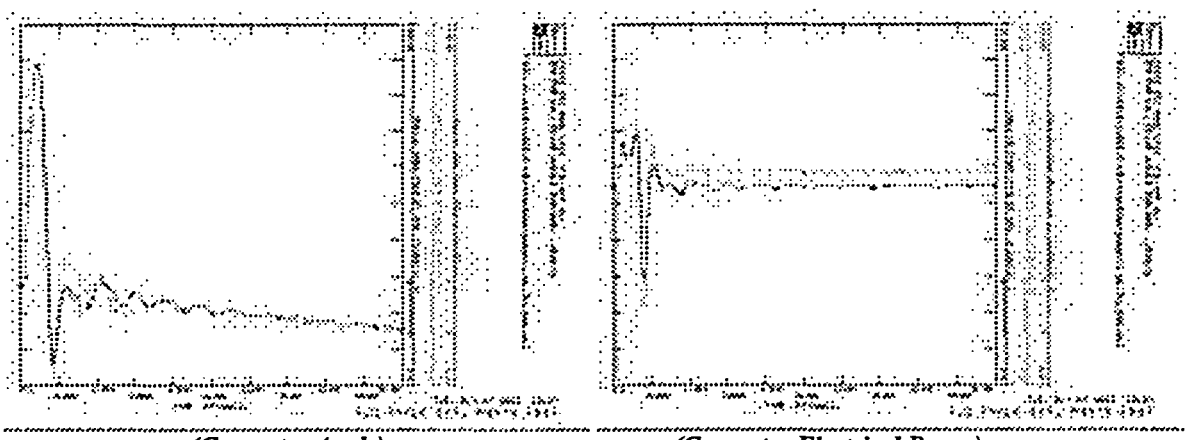

(Generator Angle) *(Generator Electrical Power)*

Figure II.9 Damping for Prior Outage Contingency 11 (Table B12)
(Point Beach – North Appleton Out, Point Beach – Granville Fault)
PSSs Modeled for Point Beach

Implementation of PSSs at Point Beach with the GIC050 up-rate modeled produced favorable damping response to various fault scenarios. It was decided that since the damping looked acceptable with the GIC050 up-rate that additional simulations to demonstrate the effectiveness of the PSSs prior to the up-rate of GIC050 would not be necessary. The addition of PSSs on the Point Beach Generation station would most likely reduce or eliminate stability operating restrictions for Kewaunee and Point Beach.

Additional studies will be required to determine any changes that may be necessary for the existing operating guides for Point Beach and Kewaunee generation stations. Initial studies performed for this request indicate that a potential exists for additional operating restrictions may be required for Point Beach and Kewaunee to address the current capacity and various line

outage scenarios. These studies are scheduled to begin by November of 2003 and should be completed by the end of 2003.

Conclusions

Proposed System Without Any Study Generators
Seven contingencies were found for which the existing system equipment is not expected to provide acceptable stability response for the light load (50%) case without any study generation modeled. These contingencies can be corrected by modifying relay settings at Rocky Run and by replacing four breakers at the North Appleton substation. In order to address the short in-service date of the generator and to address pre-existing issues at the North Appleton substation, a special protection scheme (SPS) designed to sectionalize the North Appleton 345 kV bus would be implemented as a short-term solution. This option is only temporary until breakers can be ordered and scheduled to be replaced. The SPS would trip either bus tie breaker 12-1 or 23-3 in primary time for faults located 10% or less from the North Appleton substation on the 345 KV lines. By sectionalizing the 345 kV bus, the intensity of the fault that the Point Beach and Kewaunee generators see is reduced and generator stability is increased.

Several prior outage scenarios demonstrated the need for the revision to the existing operation guide for Point Beach and Kewaunee generators. Additional study work is planned to begin at the end of October to review the current operation guides and modify them as required. It has been demonstrated in these studies that the completion of the power system stabilizer (PSS) project for the Point Beach generation station would eliminate a number of the stability issues for certain line out conditions.

Proposed System With Competing Generators, but Without GIC050
Additional studies will be completed at a later date for this scenario.

Proposed System With GIC050 and Competing Generators
Additional studies will be completed at a later date for this scenario.

Proposed System With GIC050 Only
Seven contingencies were found for which the existing system equipment is not expected to provide acceptable stability response for the light load (50%) case with GIC050 modeled. All seven contingencies are pre-existing and need to be corrected prior to the implementation of GIC050. As noted before, relay setting changes and a special protection scheme would be required to be completed prior to the implementation of the generation increase. The SPS is an interim step in the process of replacing the necessary breakers at the North Appleton substation.

As with the pre-existing system scenarios, several prior outage scenarios studied with the addition of the GIC050 generation demonstrated the need for a revision to the existing operation guide for the Point Beach and Kewaunee generators. An additional study is planned to begin at the end of October to review the current operation guides and modify them as required. It has been demonstrated in these studies that the completion of the power system stabilizer (PSS) project for the Point Beach generation station would eliminate a number of the stability issues for certain line out conditions.

III. Short Circuit Analysis

Typically, the SIS fault study analysis evaluates the short circuit interrupting capability of breakers in the ATC system with the proposed generator, GIC050, modeled. Because this study is for an up rate of an existing generator, there will not be any additional fault current contributions from this generator. Therefore, a short circuit analysis was not performed for this generators and discussion regarding this type of analysis is not included in this report.

IV. Thermal Analysis

The customer waived the typical thermal analysis because Transmission Service Requests had already been submitted on the MISO OASIS. The Transmission Service Requests associated with this proposed facility are MISO OASIS #75005216 and 75018478. Since a thermal analysis was not performed, Optional System Upgrades will not be presented in this report.

APPENDIX A

SYSTEM ONE LINE DIAGRAMS

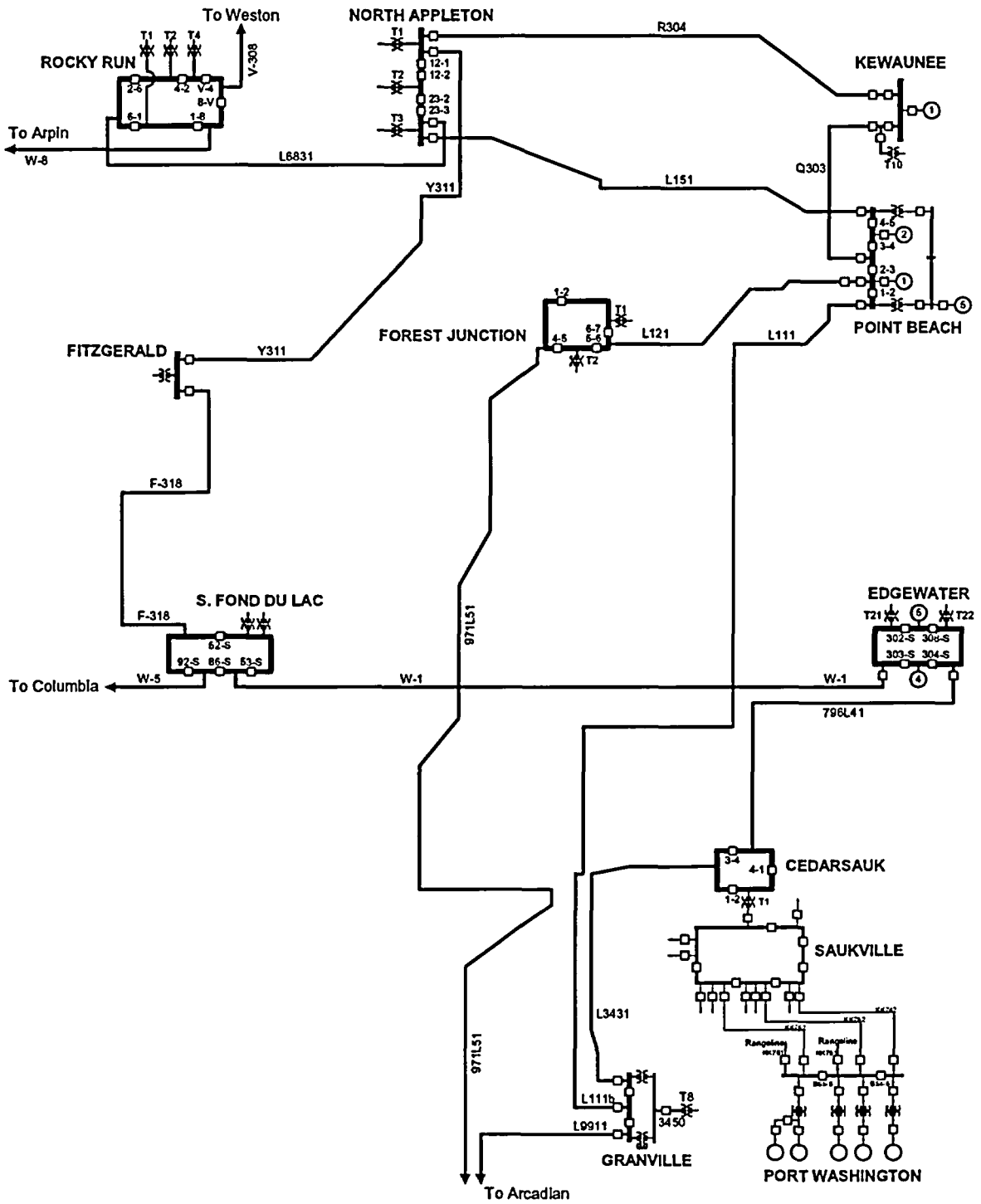

Figure A1: One-Line Diagram of Expected System Without GIC050 or Earlier Queue GIR Projects

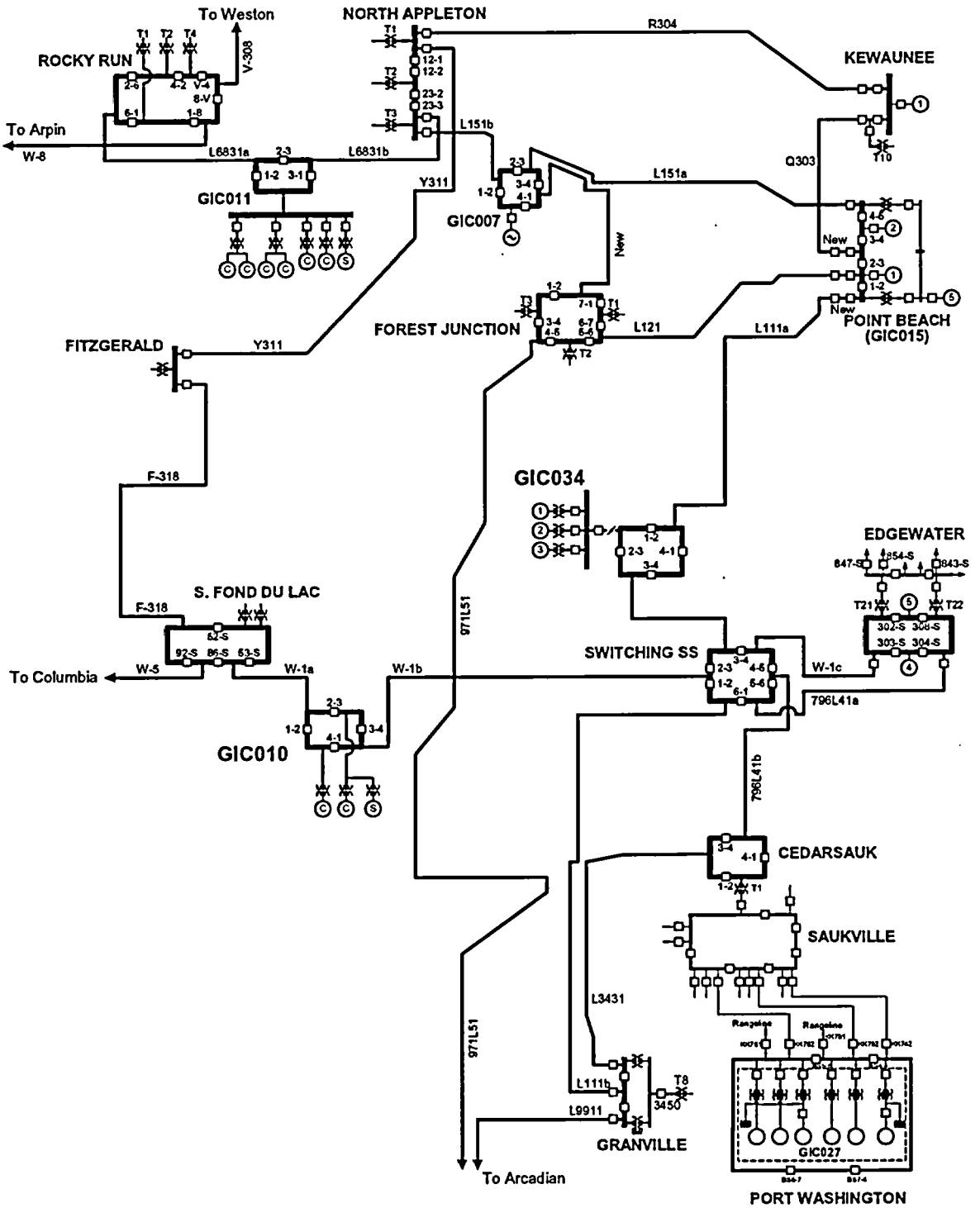

Figure A2: One-Line Diagram of Expected System With Earlier Queue GIR Projects (GIC007, GIC010, GIC015, GIC027, and GIC034). GIC050 Not Included

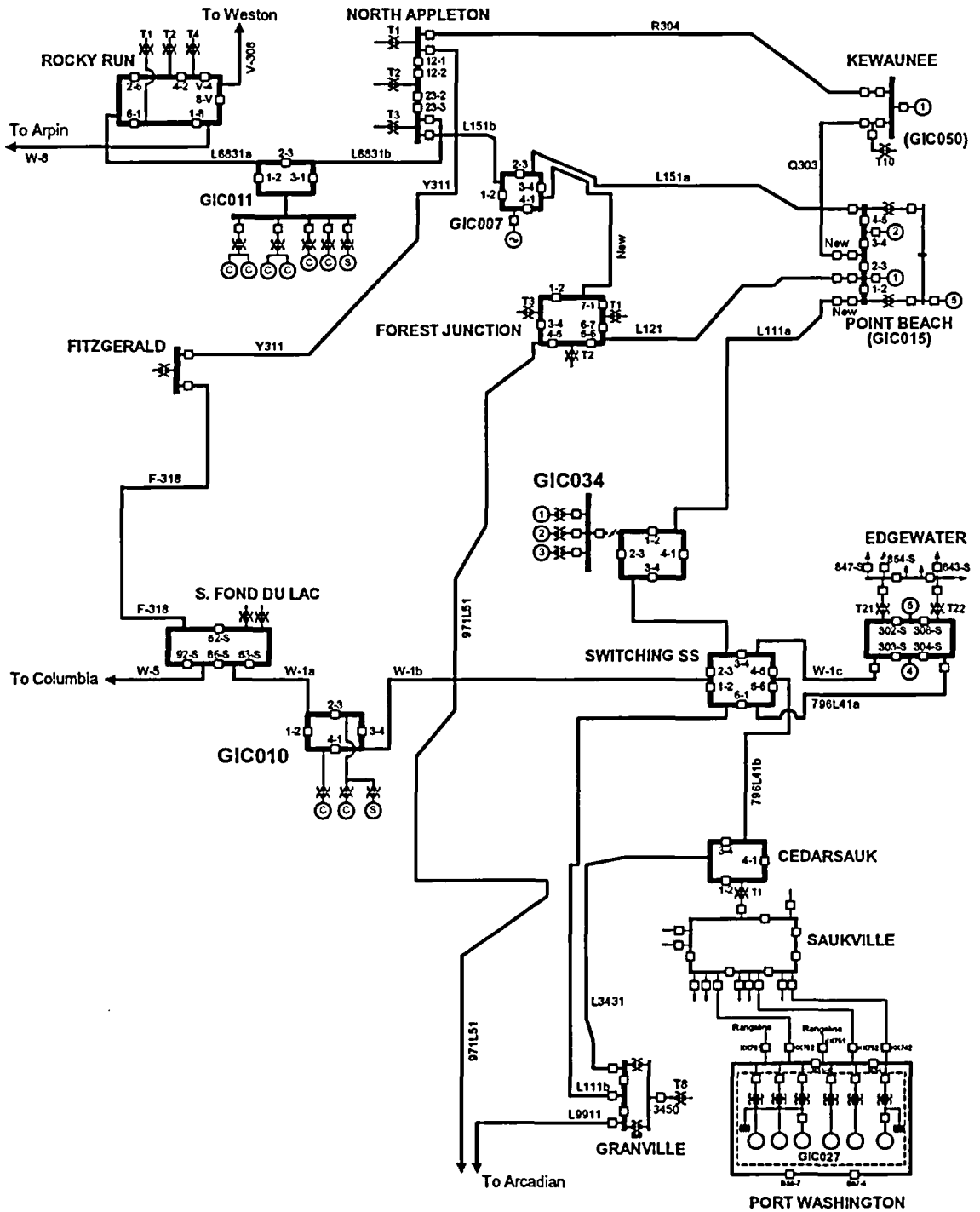

Figure A3: One-Line Diagram of Expected System With Earlier Queue GIR Projects (GIC007, GIC010, GIC015, GIC027, and GIC034). GIC050 Included

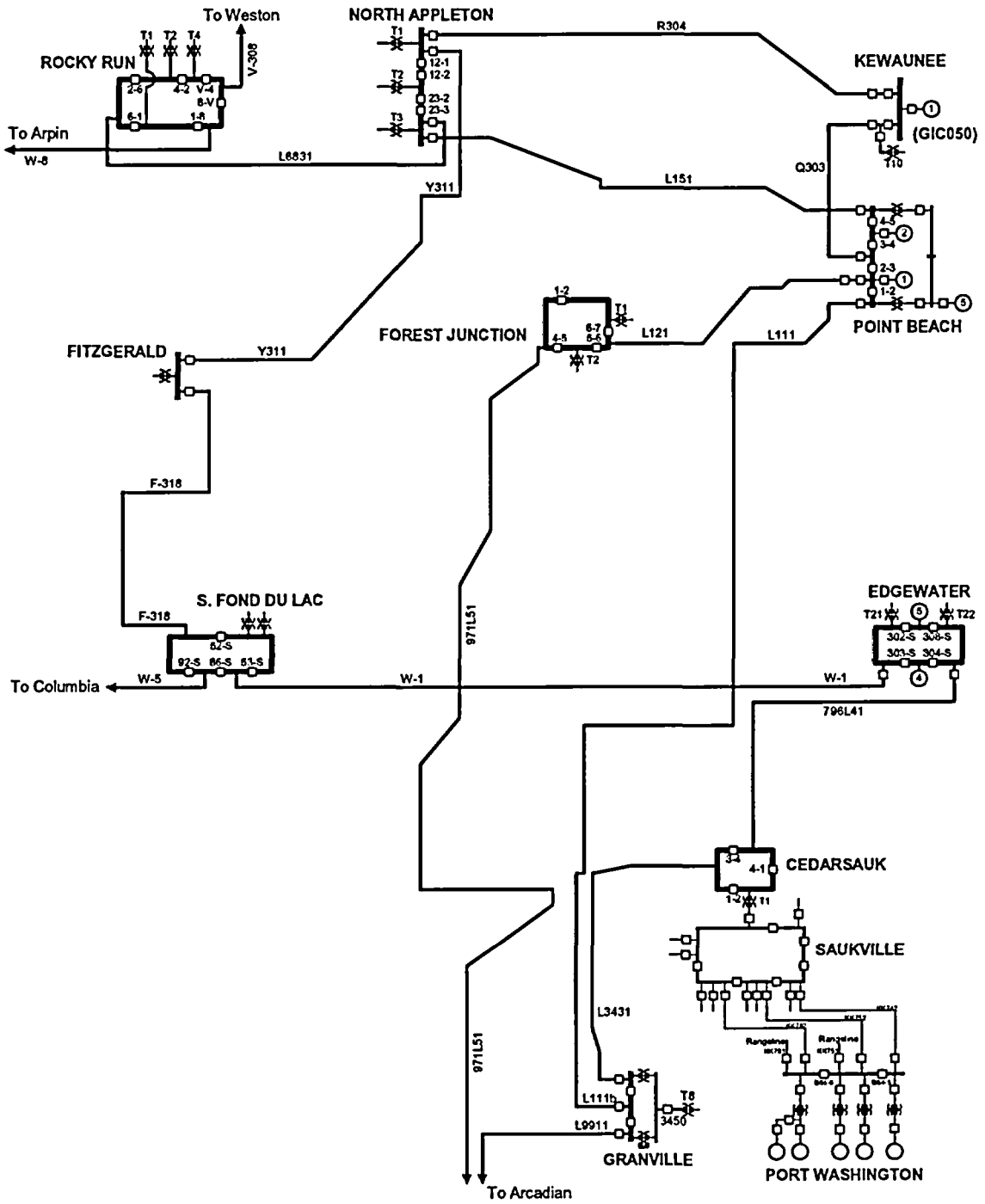

Figure A4: One-Line Diagram of Expected System Without Earlier Queue GIR Projects (GIC007, GIC010, GIC015, GIC027, and GIC034). GIC050 Included

APPENDIX B

STABILITY ANALYSIS RESULTS

Results will have a greater stability margin than those shown in Table B3, which include a prior outage condition.

Table B1: Critical Clearing Times, 2004 MMWG (50% Peak Load) Stability Base Case.
Primary Clearing Time. Before GIC050. Including GIC007, GIC010, GIC011, GIC015, GIC027, GIC034.

Item	Faulted Facilities	Failed Circuit Breaker	Element(s) Cleared In Breaker Failure	Clearing Time		Units Unstable
				Actual	Critical	

Notes:

Table B2: Critical Clearing Times, 2004 MMWG (50% Peak Load) Stability Base Case. Intact System, Breaker Failure Clearing Time. Before GIC050. Including GIC007, GIC010, GIC015, GIC027, GIC034.

Item	Faulted Element	Failed Circuit Breaker	Element(s) Cleared In Breaker Failure	Clearing Time		Units Unstable
				Actual	Critical	

Notes:

Table B2 Continued: Critical Clearing Times, 2004 MMWG (50% Peak Load) Stability Base Case. Intact System, Breaker Failure Clearing Time. Before GIC050. Including GIC007, GIC010, GIC015, GIC027, GIC034.

Item	Pre-Existing Outage	Faulted Facilities	Clearing Time		Units Unstable
			Actual	Critical	

Notes:

Table B3: Critical Clearing Times, 2004 MMWG (50% Peak Load) Stability Base Case. Line Out Of Service, Primary Clearing Time. Before GIC050. Including GIC007, GIC010, GIC011, GIC015, GIC027, GIC034.

Results will have a greater stability margin than those shown in Table B6, which include a prior outage condition.

Table B4: Critical Clearing Times, 2004 MMWG (70% Peak Load) Stability Base Case.
Primary Clearing Time. Before GIC050. Including GIC007, GIC010, GIC011, GIC015, GIC027, GIC034.

Item	Faulted Facilities	Failed Circuit Breaker	Element(s) Cleared In Breaker Failure	Clearing Time		Units Unstable
				Actual	Critical	

Notes:

Table B5: Critical Clearing Times, 2004 MMWG (70% Peak Load) Stability Base Case. Intact System, Breaker Failure Clearing Time. Before GIC050. Including GIC007, GIC010, GIC011, GIC015, GIC027, GIC034.

Item	Faulted Element	Failed Circuit Breaker	Element(s) Cleared In Breaker Failure	Clearing Time		Units Unstable
				Actual	Critical	

Notes:

Table B5 Continued: Critical Clearing Times, 2004 MMWG (70% Peak Load) Stability Base Case. Intact System, Breaker Failure Clearing Time. Before GIC050. Including GIC007, GIC010, GIC011, GIC015, GIC027, GIC034.

Item	Pre-Existing Outage	Faulted Facilities	Clearing Time		Units Unstable
			Actual	Critical	

Notes:

Table B6: Critical Clearing Times, 2004 MMWG (70% Peak Load) Stability Base Case. Line Out Of Service, Primary Clearing Time. Before GIC050. Including GIC007, GIC010, GIC011, GIC015, GIC027, GIC034.

Results will have a greater stability margin than those shown in Table B9, which include a prior outage condition.

Table B7: Critical Clearing Times, 2004 MMWG (70% Peak Load) Stability Base Case.
Primary Clearing Time. After GIC050. Including GIC007, GIC010, GIC011, GIC015, GIC027, GIC034.

Item	Faulted Facilities	Failed Circuit Breaker	Element(s) Cleared In Breaker Failure	Clearing Time		Units Unstable
				Actual	Critical	

Notes:

Table B8: Critical Clearing Times, 2004 MMWG (70% Peak Load) Stability Base Case. Intact System, Breaker Failure Clearing Time. After GIC050. Including GIC007, GIC010, GIC011, GIC015, GIC027, GIC034.

Item	Faulted Element	Failed Circuit Breaker	Element(s) Cleared In Breaker Failure	Clearing Time		Units Unstable
				Actual	Critical	

Notes:

Table B8 Continued: Critical Clearing Times, 2004 MMWG (70% Peak Load) Stability Base Case. Intact System, Breaker Failure Clearing Time. After GIC050. Including GIC007, GIC010, GIC011, GIC015, GIC027, GIC034.

Item	Pre-Existing Outage	Faulted Facilities	Clearing Time		Units Unstable
			Actual	Critical	

Notes:

Table B9: Critical Clearing Times, 2004 MMWG (70% Peak Load) Stability Base Case.
Line Out Of Service, Primary Clearing Time. After GIC050. Including GIC007, GIC010, GIC011, GIC015, GIC027, GIC034.

Results will have a greater stability margin than those shown in Table B12, which include a prior outage condition.

Table B10: Critical Clearing Times, 2004 MMWG (50% Peak Load) Stability Base Case.
Primary Clearing Time. Existing System Only. No Competing Generators or GIC050.

Item	Faulted Facilities	Failed Circuit Breaker	Element(s) Cleared In Breaker Failure	Actual Clearing Time (No Stability Margin)	Calculated Critical Clearing Times "R1" Voltage	Units Unstable	Calculated Critical Clearing Times "R2" Voltage	Units Unstable
1	POB-NAP	POB-NAP @ POB	POB BS4-5	8.6	≥9.5 IPOA	POB,KEW @ 9.5	≥9.5 IPOA	
2	POB-KEW	POB-KEW @ POB	POB BS3-4, BS2-3	8.6	≥9.5 IPOA		≥9.5 IPOA	
3	POB-FOJ	POB-FOJ @ POB	POB-FOJ CB#2	Double CB 4.0	7.5	POB,KEW @ 8.0	7.5	POB,KEW @ 8.0
4	POB-GVL	POB-SS @ POB	POB BS1-2	8.6	≥9.5 IPOA		≥9.5 IPOA	
5	FOJ-POB	BS6-7 @ FOJ	FOJ T1	11.25	N/R		N/R	
6	FOJ-AND	BS4-5 @ FOJ	FOJ T2	11.25	N/R		N/R	
7	NAP-KEW	NAP-KEW @ NAP	NAP-FTZ, NAP T1, BS12-1	12.55	≥13.5 SLG	POB,KEW @ 12.0	≥13.5 SLG	POB,KEW @ 12.5
8	NAP-FTZ	NAP-FTZ @ NAP	NAP-KEW, NAP T1, BS12-1	12.4	≥13.5 SLG	POB,KEW @ 11.0	≥13.5 SLG	POB,KEW @ 11.5
9	NAP-POB	NAP-POB @ NAP	NAP-RRN, NAP T3, BS23-3	12.55	≥13.5 SLG	POB,KEW @ 12.0	≥13.5 SLG	POB,KEW @ 12.5
10	NAP-RRN	NAP-POB @ NAP	NAP-POB, NAP T3, BS23-3	10.55	≥12.0 SLG	POB,KEW @ 11.0	≥12.0 SLG	POB,KEW @ 11.5
11	KEW-NAP	KEW-NAP @ KEW	KEW-NAP CB#2	Double CB ≤5.0	8.0	POB,KEW @ 8.5	8.5	POB,KEW @ 9.0
12	KEW-POB	KEW-POB @ KEW	KEW-POB CB#2, T10	Double CB ≤5.0	8.5	KEW @ 9.0	8.5	KEW @ 9.0
13	RRN T1 (345)	BS6-1 @ RRN	RRN-NAP	17.5		WES @ 15.5	N/R	
14	RRN-ARPa	BS1-8 @ RRN	RRN T1	17.0		WES @ 15.5	N/R	
15	RRN-ARPb	BS8-V @ RRN	RRN-WES	18.0		WES @ 15.5	N/R	
16	RRN-WESa	BSV-4 @ RRN	RRN T4	17.0	N/R		N/R	
17	RRN-WESb	BS8-V @ RRN	RRN-ARP	18.0	N/R		N/R	
18	SFL-COL	BS86-S @ SFL	SFL-EDG	12.0	N/R		N/R	
19	SFL-FTZ	BS92-S @ SFL	SFL-COL	12.0	N/R		N/R	
20	SFL 345-138 #1/#2	BS53-S @ SFL	SFL-EDG	12.0	N/R		N/R	

Notes:

1. Table abbreviations: ADN – Arcadian, ARP – Arpin, COL – Columbia, CDR – Cedarsauk, EDG – Edgewater, FOJ – Forest Junction, FTZ – Fitzgerald, GVL – Granville, KEW – Kewaunee, NAP – North Appleton, POB – Point Beach, RRN – Rocky Run, SFL – South Fond Du Lac, SS – Switching Station, WES - Weston. SS-EDG #1 is W-1C, SS-EDG #2 is 796L41a, PUL – Pulliam, SLG – Single Line to Ground Fault, IPOA - Three Phase fault degraded to SLG fault via Independent Pole Operated Breaker, SPS – Special Protection Scheme at North Appleton.
2. The fault is applied at the first named terminal of the faulted element unless otherwise noted (i.e. 90%). All faults modeled were 3-phase faults.
3. Critical = Critical Clearing Time (cycles). Actual = Actual Maximum Expected Clearing Time (cycles). Red cell indicates actual equipment clearing times that times that are inadequate.
4. In the Units Unstable columns, units unstable at a specific generating facility are designated with only the substation name and not with specific units (i.e. POB instead of POB G1-2).
5. "R1" = Voltage at Point Beach and Kewaunee substations of 352 kV. "R2" = Voltage at Point Beach and Kewaunee substations of 354 kV.
6. N/R Run not required. This contingency was expected to not improve with higher voltages at Point Beach and Kewaunee or was found acceptable after the generator increase.

Table B11: Critical Clearing Times, 2004 MMWG (50% Peak Load) Stability Base Case. Intact System, Breaker Failure Clearing Time. Existing System Only. No Competing Generators or GIC050.

Item	Pre-Existing Outage	Faulted Facilities	Clearing Time		Units Unstable
			Actual	Critical	
1	POB-KEW	POB-NAP1 @ POB	≤5.0	≥7.5	Marginal Damping
2	KEW-NAP	POB-NAP2 @ POB	≤5.0	≥6.0	Marginal Damping
3	POB-GVL	POB-NAP3 @ POB	≤5.0	≥6.5	Marginal Damping
4	POB-FOJ	POB-NAP4 @ POB	≤5.0	≥6.5	Marginal Damping
5	POB-GVL	POB-FOJ1 @ POB	≤5.0	≥6.0	Marginal Damping
6	POB-KEW	POB-FOJ2 @ POB	≤5.0	≥7.5	Marginal Damping
7	KEW-NAP	POB-FOJ3 @ POB	≤5.0	≥6.0	Marginal Damping
8	POB-NAP	POB-FOJ4 @ POB	≤5.0	≥6.5	Marginal Damping
9	FOJ-AD	POB-GVL1 @ POB	≤5.0	≥7.0	Marginal Damping
10	POB-KEW	POB-GVL2 @ POB	≤5.0	≥8.0	Marginal Damping
11	POB-NAP	POB-GVL3 @ POB	≤5.0	≥7.0	Marginal Damping
12	POB-FOJ	POB-GVL4 @ POB	≤5.0	≥6.0	Marginal Damping
13	KEW-NAP	POB-GVL5 @ POB	≤5.0	≥6.5	Marginal Damping
14	POB-NAP	KEW-NAP1 @ KEW	≤5.0	≥6.0	Marginal Damping
15	KEW-POB	KEW-NAP2 @ KEW	≤5.0		
16	POB-GVL	KEW-NAP3 @ KEW	≤5.0	≥6.5	Marginal Damping
17	POB-FOJ	KEW-NAP4 @ KEW	≤5.0	≥6.0	Marginal Damping
18	POB-GVL	POB-KEW1 @ POB	≤5.0	≥8.0	Marginal Damping
19	POB-NAP	POB-KEW2 @ POB	≤5.0	≥7.5	Marginal Damping
20	POB-FOJ	POB-KEW3 @ POB	≤5.0	≥7.0	Marginal Damping
21	KEW-NAP	KEW-POB @ KEW	≤5.0		
22	POB-GVL	GVL-AD @ GVL	≤5.0	≥10.0	
23	POB-GVL	GVL-CDR @ GVL	≤5.0	≥10.0	
24	GVL-ADN	GVL-POB @ GVL	≤5.0	≥10.0	

Notes:

1. Table abbreviations: ADN – Arcadian, ARP – Arpin, COL – Columbia, CDR – Cedarsauk, EDG – Edgewater, FOJ – Forest Junction, FTZ – Fitzgerald, GVL – Granville, KEW – Kewaunee, NAP – North Appleton, POB – Point Beach, RRN – Rocky Run, SFL – South Fond Du Lac, SS – Switching Station, WES - Weston. SS-EDG #1 is W-1C, SS-EDG #2 is 796L41a, PUL – Pulliam, SLG – Single Line to Ground Fault, IPOA - Three Phase fault degraded to SLG fault via Independent Pole Operated Breaker, SPS – Special Protection Scheme at North Appleton.
2. The fault is applied at the first named terminal of the faulted element unless otherwise noted (i.e. 90%). All faults modeled were 3-phase faults.
3. Critical = Critical Clearing Time (cycles). Actual = Actual Maximum Expected Clearing Time (cycles). Red cell indicates actual equipment clearing times that times that are inadequate.
4. In the Units Unstable columns, units unstable at a specific generating facility are designated with only the substation name and not with specific units (i.e. POB instead of POB G1-2).
5. All simulations performed with a voltage at Point Beach and Kewaunee substations of 352 kV.

Table B12: Critical Clearing Times, 2004 MMWG (50% Peak Load) Stability Base Case. Line Out Of Service, Primary Clearing Time. Existing System Only. No Competing Generators or GIC050.

Results will have a greater stability margin than those shown in Table B12, which include a prior outage condition.

Table B13: Critical Clearing Times, 2004 MMWG (50% Peak Load) Stability Base Case. Primary Clearing Time. WithGIC050 Only. No Competing Generators

Item	Faulted Facilities	Failed Circuit Breaker	Element(s) Cleared In Breaker Failure	Actual Clearing Time (No Stability Margin)	Calculated Critical Clearing Times "R1" Voltage	Units Unstable	Calculated Critical Clearing Times "R2" Voltage	Units Unstable
1	POB-NAP	POB-NAP @ POB	POB BS4-5	8.6	≥9.5 IPOA		>9.5 IPOA	
2	POB-KEW	POB-KEW @ POB	POB BS3-4, BS2-3	8.6	≥9.5 IPOA		>9.5 IPOA	
3	POB-FOJ	POB-FOJ @ POB	POB-FOJ CB#2	Double CB 4.0	7.0	POB,KEW @ 7.5	7.5	POB,KEW @ 8.0
4	POB-GVL	POB-SS @ POB	POB BS1-2	8.6	≥9.5 IPOA		>9.5 IPOA	
5	FOJ-POB	BS6-7 @ FOJ	FOJ T1	11.25	≥16.5		N/R	
6	FOJ-AND	BS4-5 @ FOJ	FOJ T2	11.25	≥15.0		N/R	
7	NAP-KEW	NAP-KEW @ NAP	NAP-FTZ, NAP T1, BS12-1	12.55	≥13.5 SLG ≥13.5 SPS	POB,KEW @ 11.0	≥13.5 SLG ≥13.5 SPS	POB,KEW @ 12.0
8	NAP-FTZ	NAP-FTZ @ NAP	NAP-KEW, NAP T1, BS12-1	12.4	≥13.5 SLG 13.0 SPS	POB,KEW @ 10.5	≥13.5 SLG ≥13.0 SPS	POB,KEW @ 11.0
9	NAP-POB	NAP-POB @ NAP	NAP-RRN, NAP T3, BS23-3	12.55	≥13.5 SLG ≥13.5 SPS	POB,KEW @ 11.5	≥13.5 SLG ≥13.5 SPS	POB,KEW @ 12.0
10	NAP-RRN	NAP-POB @ NAP	NAP-POB, NAP T3, BS23-3	10.55	≥12.0 SLG ≥12.0 SPS	POB,KEW @ 10.5	≥12.0 SLG ≥12.0 SPS	POB,KEW @ 11.0
11	KEW-NAP	KEW-NAP @ KEW	KEW-NAP CB#2	Double CB ≤5.0	7.5	POB,KEW @ 8.0	8.0	POB,KEW @ 85
12	KEW-POB	KEW-POB @ KEW	KEW-POB CB#2, T10	Double CB ≤5.0	7.5	KEW @ 8.0	7.5	KEW @ 8.0
13	RRN T1 (345)	BS6-1 @ RRN	RRN-NAP	17.5	[illegible]	WES @ 15.5	N/R	
14	RRN-ARPa	BS1-8 @ RRN	RRN T1	17.0	[illegible]	WES @ 15.5	N/R	
15	RRN-ARPb	BS8-V @ RRN	RRN-WES	18.0	[illegible]	WES @ 15.5	N/R	
16	RRN-WESa	BSV-4 @ RRN	RRN T4	17.0	≥17.5		N/R	
17	RRN-WESb	BS8-V @ RRN	RRN-ARP	18.0	≥18.5		N/R	
18	SFL-COL	BS86-S @ SFL	SFL-EDG	12.0	≥14.0		N/R	
19	SFL-FTZ	BS92-S @ SFL	SFL-COL	12.0	≥15.0		N/R	
20	SFL 345-138 #1/#2	BS53-S @ SFL	SFL-EDG	12.0	≥14.0		N/R	

Notes:

1. Table abbreviations: ADN – Arcadian, ARP – Arpin, COL – Columbia, CDR – Cedarsauk, EDG – Edgewater, FOJ – Forest Junction, FTZ – Fitzgerald, GVL – Granville, KEW – Kewaunee, NAP – North Appleton, POB – Point Beach, RRN – Rocky Run, SFL – South Fond Du Lac, SS – Switching Station, WES - Weston. SS-EDG #1 is W-1C, SS-EDG #2 is 796L41a, PUL – Pulliam, SLG – Single Line to Ground Fault, IPOA - Three Phase fault degraded to SLG fault via Independent Pole Operated Breaker, SPS – Special Protection Scheme at North Appleton.
2. The fault is applied at the first named terminal of the faulted element unless otherwise noted (i.e. 90%). All faults modeled were 3-phase faults.
3. Critical = Critical Clearing Time (cycles). Actual = Actual Maximum Expected Clearing Time (cycles). Red cell indicates actual equipment clearing times that times that are inadequate.
4. In the Units Unstable columns, units unstable at a specific generating facility are designated with only the substation name and not with specific units (i.e. POB instead of POB G1-2).
5. "R1" = Voltage at Point Beach and Kewaunee substations of 352 kV. "R2" = Voltage at Point Beach and Kewaunee substations of 354 kV.
6. N/R Run not required. This contingency was expected to not improve with higher voltages at Point Beach and Kewaunee.

Table B14: Critical Clearing Times, 2004 MMWG (50% Peak Load) Stability Base Case. Intact System, Breaker Failure Clearing Time. After GIC050 Only, No Competing Generation.

Item	Pre-Existing Outage	Faulted Facilities	Clearing Time		Units Unstable
			Actual	Critical	
1	POB-KEW	POB-NAP1 @ POB	≤5.0	7.5	POB @ 8.0, Marginal Damping
2	KEW-NAP	POB-NAP2 @ POB	≤5.0	6.0	POB,KEW @ 6.5, Marginal Damping
3	POB-GVL	POB-NAP3 @ POB	≤5.0	6.5	POB,KEW @ 7.0, Marginal Damping
4	POB-FOJ	POB-NAP4 @ POB	≤5.0	6.5	POB,KEW @ 7.0, Marginal Damping
5	POB-GVL	POB-FOJ1 @ POB	≤5.0	6.0	POB,KEW @ 6.5, Marginal Damping
6	POB-KEW	POB-FOJ2 @ POB	≤5.0	7.5	POB @ 8.0, Marginal Damping
7	KEW-NAP	POB-FOJ3 @ POB	≤5.0	6.0	POB,KEW @ 6.5, Marginal Damping
8	POB-NAP	POB-FOJ4 @ POB	≤5.0	6.5	POB,KEW @ 7.0, Marginal Damping
9	FOJ-AD	POB-GVL1 @ POB	≤5.0	7.0	POB,KEW @ 7.5, Marginal Damping
10	POB-KEW	POB-GVL2 @ POB	≤5.0	8.0	POB @ 8.5, Marginal Damping
11	POB-NAP	POB-GVL3 @ POB	≤5.0	7.0	POB,KEW @ 7.5, Marginal Damping
12	POB-FOJ	POB-GVL4 @ POB	≤5.0	6.0	POB,KEW @ 6.5, Marginal Damping
13	KEW-NAP	POB-GVL5 @ POB	≤5.0	6.5	POB,KEW @ 7.0, Marginal Damping
14	POB-NAP	KEW-NAP1 @ KEW	≤5.0	6.0	POB,KEW @ 6.5, Marginal Damping
15	KEW-POB	KEW-NAP2 @ KEW	≤5.0		KEW
16	POB-GVL	KEW-NAP3 @ KEW	≤5.0	6.5	POB,KEW @ 7.0, Marginal Damping
17	POB-FOJ	KEW-NAP4 @ KEW	≤5.0	6.0	POB,KEW @ 6.5, Marginal Damping
18	POB-GVL	POB-KEW1 @ POB	≤5.0	8.0	POB @ 8.5, Marginal Damping
19	POB-NAP	POB-KEW2 @ POB	≤5.0	7.5	POB @ 8.0, Marginal Damping
20	POB-FOJ	POB-KEW3 @ POB	≤5.0	7.0	POB @ 7.5, Marginal Damping
21	KEW-NAP	KEW-POB @ KEW	≤5.0		KEW
22	POB-GVL	GVL-AD @ GVL	≤5.0	≥10.0	
23	POB-GVL	GVL-CDR @ GVL	≤5.0	≥10.0	
24	GVL-ADN	GVL-POB @ GVL	≤5.0	≥10.0	

Notes:

1. Table abbreviations: ADN – Arcadian, ARP – Arpin, COL – Columbia, CDR – Cedarsauk, EDG – Edgewater, FOJ – Forest Junction, FTZ – Fitzgerald, GVL – Granville, KEW – Kewaunee, NAP – North Appleton, POB – Point Beach, RRN – Rocky Run, SFL – South Fond Du Lac, SS – Switching Station, WES - Weston. SS-EDG #1 is W-1C, SS-EDG #2 is 796L41a, PUL – Pulliam, SLG – Single Line to Ground Fault, IPOA - Three Phase fault degraded to SLG fault via Independent Pole Operated Breaker, SPS – Special Protection Scheme at North Appleton.
2. The fault is applied at the first named terminal of the faulted element unless otherwise noted (i.e. 90%). All faults modeled were 3-phase faults.
3. Critical = Critical Clearing Time (cycles). Actual = Actual Maximum Expected Clearing Time (cycles). Red cell indicates actual equipment clearing times that times that are inadequate.
4. In the Units Unstable columns, units unstable at a specific generating facility are designated with only the substation name and not with specific units (i.e. POB instead of POB G1-2).
5. All simulations performed with a voltage at Point Beach and Kewaunee substations of 352 kV

Table B15: Critical Clearing Times, 2004 MMWG (50% Peak Load) Stability Base Case. Line Out Of Service, Primary Clearing Time. After GIC050 Only. No Competing Generators.

APPENDIX C

SHORT CIRCUIT ANALYSIS RESULTS

No results are presented in this section.

APPENDIX D

THERMAL ANALYSIS RESULTS

No results are presented in this section.

APPENDIX E

STUDY CRITERIA AND METHODOLOGIES

Stability Study Criteria

The stability criteria used in this study is the same criteria used for all generation System Impact Studies. All modeled machines must remain stable after a three-phase fault is cleared from any transmission element under the following conditions:

1) Fault cleared in primary time with an otherwise intact system
2) Fault cleared in delayed clearing time (i.e. breaker failure conditions) with an otherwise intact system.
3) Fault cleared in primary clearing time with a pre-existing outage of any other transmission element.

For breaker failure simulations it is assumed that if independent pole operating (IPO) breakers are used, only one of the three breaker phases will fail to clear the fault. When this occurs the initial three-phase fault becomes a single-phase fault after the initial breaker operation attempt. This is a much less severe condition than a three-phase fault existing on the system until breaker failure protection has time to operate.

Transient stability studies were used to determine if the critical clearing time (CCT) for all pertinent contingencies is less than the corresponding maximum expected breaker failure clearing time. Three-phase faults were applied at the faulted bus and cleared in progressively longer times to determine the CCT necessary to avoid any generating unit becoming unstable after clearing the fault. For example, a CCT of 10 cycles means that one or more generating units became unstable at 10.5 cycles, while all units remained stable at 10 cycles. The CCT is the longest time that fault conditions can be applied under the described condition before being removed by protective equipment for which the units on the system will remain stable. Any critical clearing time less than its corresponding actual maximum expected breaker failure clearing time is considered unacceptable.

It should be noted that extensive simulations for Criteria 2 and 3 are always performed. Criteria 3 simulations involve the same faults as Criteria 1, but with a weaker system due to a prior outage condition existing. Because Criteria 1 simulations are always less sever than Criteria 3 simulations, Criteria 1 simulations are usually not examined in detail.

Simulations were performed at the light-load (50%) system load level. The stability performance during light-load conditions is worse than at higher load levels. This is expected due to the different system conditions the generators see at light load, specifically the longer electrical path from source to load. Therefore light-load studies were performed to identify the worst-case stability performance and to identify required upgrades that will protect the transmission system and generation at various load levels. If a customer requests an optional study involving a heavy-load (100%) or a shoulder-load (70%) load level, which may be of interest for a peaking unit, a comparison will be made between the stability results for the two different load conditions.

Stability Study Methodology

Stability studies are performed using the Dynamics Simulation and Power Flow modules of the Power System Simulation/Engineering-26 (PSS/E, Version 26) program from Power Technologies, Inc (PTI). This program is an industry-wide accepted application.

The 2004 MMWG stability base case was used to create a 2004 light-load (50%) case for the stability study. This study includes authorized ATC transmission system projects that are planned to be in service by the generator in service date. This case contains dynamic model information for generators throughout MAIN, as well as a significant portion of the continental United States. ATC determines in its sole judgment which Generator Interconnection Requests with earlier queue positions may impact study results. These requests are included in the model along with any required system modifications associated with these requests.

The latest power flow and dynamic model information for the generator, exciter, and governor, as provided by the Generator, were incorporated into the dynamic study database. Response tests of the exciter and governor are completed, and steady state and step response tests of the entire system are performed to ensure an acceptable dynamics model.

Short Circuit Study Criteria

The short circuit study evaluates the short circuit interrupting capability of the protection devices in the area of the proposed generation to determine the circuit breaker replacements required by increased fault duty due to the proposed generation, as well as breakers over-dutied under system conditions prior to the proposed generation being put into service. Because most generators have competing requests, comparisons with and without the competing generators in service may be performed to determine their effects on the proposed generator requirements.

Circuit breaker interrupting capability was determined by the calculated fault current and the corresponding bus X/R ratio. The larger of either the 3-phase or 1-phase faults is used to identify the maximum short-circuit duty for each circuit breaker. Any circuit breaker whose de-rated capability is less than the maximum calculated fault current should be replaced before the proposed generator is allowed to interconnect.

Short Circuit Study Methodology

The protection model base case used to perform this study includes detailed modeling of all transmission elements and generation in the area, including positive-, negative-, and zero-sequence impedances to allow calculation of both three-phase and single-phase-to-ground faults.

Two assumptions are made when de-rating circuit breaker short circuit capabilities. First, all circuit breakers are assumed to have a contact parting time of 1 cycle less than their operating time, unless specifically stated in the engineering documentation. Second, all breakers are assumed to be rated on a symmetrical current basis if their rating was given in amps rather than MVA, unless they were manufactured prior to 1964 or they are specifically stated as being total current basis rated.

All circuit breakers with three-phase or single-phase-to-ground fault currents greater than 14 kA that increased by more than 1% change with the addition of GIC034 are examined in detail. The de-rated interrupting capability of the ATC owned circuit breakers that meet these criteria are reviewed to determine if they are over-dutied under existing system conditions or become over-dutied due to the proposed generation.

Thermal Study Criteria

This thermal study identifies any thermal overloads due to export of the proposed generation to the south (75%) and west (25%). At their option, the Generator can specify a different export to delivery to a specific increased load. Solutions to any overloads found are listed as Optional System Upgrades for the purpose of entering into an Interconnection Agreement with ATC. Although thermal upgrades are not required for interconnection service, they may be required to deliver power from the facility. Delivery service can only be reserved through a confirmed Transmission Service Request submitted on the MISO OASIS.

Thermal Study Methodology

Typically, thermal analysis is performed using a 2004 Summer Peak (100%) Load model developed by ATC. In most cases all competing generators are modeled. It is important to note that even though a customer may request generation delivered in a particular manner, this assumption may not accurately reflect the specific delivery service requested once the plant is constructed. Additionally, this interconnection thermal analysis does not incorporate requests for delivery service already in the MISO transmission service queue that are currently in the "study" mode. Therefore, this analysis may not identify the same required transmission facilities identified during a transmission service request evaluation.

ENCLOSURE B

NUCLEAR MANAGEMENT COMPANY, LLC
KEWAUNEE NUCLEAR PLANT
DOCKET 50-305

November 5, 2003

Letter from Thomas Coutu (NMC)

To

Document Control Desk (NRC)

Responses to Requests for Additional Information and Supplemental Information Regarding LAR 195

WCAP 8339, Westinghouse Emergency Core Cooling System Evaluation Model – Summary, June, 1974