2591

PARSONS ET AL

CONTRACTOR REPORT

SAND85—7118
Unlimited Release
UC—70

Nevada Nuclear Waste Storage Investigations Project

Feasibility Evaluation for Using Electric Drive for Transporting Nuclear Waste Underground

Parsons Brinckerhoff Quade & Douglas, Inc.
1625 Van Ness Avenue
San Francisco, CA 94109-3678

Prepared by Sandia National Laboratories Albuquerque, New Mexico 87185 and Livermore, California 94550 for the United States Department of Energy under Contract DE-AC04-76DP00789

Printed March 1987

"Prepared by Nevada Nuclear Waste Storage Investigations (NNWSI) Project participants as part of the Civilian Radioactive Waste Management Program (CRWM). The NNWSI Project is managed by the Waste Management Project Office (WMPO) of the U. S. Department of Energy, Nevada Operations Office (DOE/NV). NNWSI Project work is sponsored by the Office of Geologic Repositories (OGR) of the DOE Office of Civilian Radioactive Waste Management (OCRWM)."

Issued by Sandia National Laboratories, operated for the United States Department of Energy by Sandia Corporation.

NOTICE: This report was prepared as an account of work sponsored by an agency of the United States Government. Neither the United States Government nor any agency thereof, nor any of their employees, nor any of their contractors, subcontractors, or their employees, makes any warranty, express or implied, or assumes any legal liability or responsibility for the accuracy, completeness, or usefulness of any information, apparatus, product, or process disclosed, or represents that its use would not infringe privately owned rights. Reference herein to any specific commercial product, process, or service by trade name, trademark, manufacturer, or otherwise, does not necessarily constitute or imply its endorsement, recommendation, or favoring by the United States Government, any agency thereof or any of their contractors or subcontractors. The views and opinions expressed herein do not necessarily state or reflect those of the United States Government, any agency thereof or any of their contractors or subcontractors.

Printed in the United States of America
Available from
National Technical Information Service
U.S. Department of Commerce
5285 Port Royal Road
Springfield, VA 22161

NTIS price codes
Printed copy: A04
Microfiche copy: A01

Distribution
Category UC-70

SAND85-7118
Unlimited Release
Printed March 1987

NEVADA NUCLEAR WASTE STORAGE INVESTIGATION PROJECT

FEASIBILITY EVALUATION FOR USING ELECTRIC DRIVE FOR TRANSPORTING NUCLEAR WASTE UNDERGROUND

Submitted to

Sandia National Laboratories
Albuquerque, New Mexico

Submitted by

Parsons Brinckerhoff Quade & Douglas, Inc.
1625 Van Ness Avenue
San Francisco, California 94109-3678

ABSTRACT

This study eliminates the necessity for using diesel fuel for the waste transporter operations, which vastly improves air quality and reduces ventilation requirements. At the nuclear waste repository in tuff, packages containing high-level nuclear waste must be transported from the surface waste handling facilities to the underground repository for emplacement. This report investigates the possibility of using a totally electric transportation system to transport the waste packages down a ramp from the surface to the underground, along a waste main that follows the long axis of the repository, to access drifts, and finally to emplacement drifts from which the packages will be emplaced in boreholes. The analysis of power requirements and methods of supplying power, and review of all-electric vehicles currently used in mines indicate that total electrification of the waste transporter is possible, with power requirements well within current design, use, and construction practices. The Kiruna all-electric truck requires only minor mechanical modification to the basic chassis for use as a waste transporter.

CONTENTS

Section		Page
1.0	INTRODUCTION	1-1
2.0	ASSUMPTIONS AND RATIONALE	2-1
3.0	POWER SYSTEM REQUIREMENTS	3-1
4.0	POWER SUPPLY METHODS	4-1
	4.1 Overhead Contact Wire System	4-2
	4.2 Overhead AC Bus Systems	4-7
	4.3 DC Current Collection Systems	4-7
	4.4 AC Current Collection Systems	4-9
5.0	TYPICAL SYSTEM SCHEMATICS	5-1
	5.1 Main Supply Feeders	5-1
	5.2 Wayside Substations	5-1
	5.3 Vehicle Electric System	5-3
	5.3.1 Traction Motor Alternative	5-3
	5.3.2 Vehicle Control Systems	5-4
	5.3.3 Off-Wire Vehicle Operations	5-5
6.0	EXISTING SYSTEMS	6-1
7.0	CONCLUSIONS AND RECOMMENDATIONS	7-1
8.0	REFERENCES	8-1

LIST OF ILLUSTRATIONS

Figure		Page
3-1	TRANSPORTER FREE-BODY DIAGRAM	3-2
3-2(a)	TRACTION POWER REQUIREMENTS: PAVED SURFACE	3-4
3-2(b)	TRACTION POWER REQUIREMENTS: TUFF SURFACE	3-4
3-3	REPOSITORY LAYOUT: VERTICAL EMPLACEMENT	3-6
3-4	TRACTION POWER REQUIREMENTS: TYPICAL DEMAND CYCLE	3-7
3-5(a)	TRACTION POWER REQUIREMENTS: TRANSPORTER No. 1, SPENT FUEL PACKAGES	3-8
3-5(b)	TRACTION POWER REQUIREMENTS: TRANSPORTER No. 2, SPENT FUEL PACKAGES	3-8
3-5(c)	TRACTION POWER REQUIREMENTS: TRANSPORTER No. 3, DEFENSE HIGH-LEVEL WASTE PACKAGES	3-9
3-5(d)	TRACTION POWER REQUIREMENTS: TRANSPORTER No. 4, DEFENSE HIGH-LEVEL WASTE PACKAGES	3-9
3-6	TRACTION POWER REQUIREMENTS: TYPICAL DAILY DEMAND	3-10
4-1	4/0 CONTACT WIRE	4-3
4-2	SUBSURFACE CONTACT WIRE SUPPORT	4-4
4-3	SURFACE CONTACT WIRE SUPPORT	4-5
4-4(a)	TYPICAL CURVE SECTION	4-6
4-4(b)	TYPICAL CURVE SEGMENT	4-6
4-5(a)	AC OVERHEAD BUS SYSTEM (4 WIRES/3 PHASE)	4-8
4-5(b)	AC OVERHEAD BUS SYSTEM (3 WIRES/3 PHASE)	4-8
4-6(a)	TYPICAL TROLLEY POLE	4-10
4-6(b)	TYPICAL MINE TROLLEY SHOE	4-10

Figure		Page
4-7	SINGLE-POLE, SINGLE-SHOE PANTOGRAPH	4-11
5-1	SINGLE LINE DIAGRAM	5-2
5-2	DC TRACTION: STEP CONTROL	5-6
5-3	DC TRACTION: CHOPPER CONTROL	5-7
5-4	DC TRACTION: AC INPUT POWER	5-8
5-5	BATTERY POWER SYSTEM	5-10
7-1	KIRUNA ELECTRIC TRUCK SIMPLIFIED ELECTRICAL CIRCUIT	7-4

Table		
4-1	TROLLEY SYSTEM ALTERNATIVES	4-2

1.0 INTRODUCTION

The Nevada Nuclear Waste Storage Investigation Project (NNWSI) is examining the feasibility of siting a geological repository for high-level nuclear waste at Yucca Mountain on and adjacent to the Nevada Test Site. The conceptual design includes transporting high-level waste packages from the repository surface facilities to the underground disposal location. The transport route includes a ramp from the surface facilities to the repository horizon, a waste main along the long axis of the repository, access drifts, and emplacement drifts to the emplacement boreholes.

The two waste emplacement configurations currently being investigated are vertical and horizontal boreholes. Although this study specifically addresses the vertical emplacement configuration, the results and conclusions can be adapted for the horizontal emplacement configuration.

This study evaluates the feasibility of using a totally electric system for the transport of nuclear waste into and out of the underground repository. The report covers the following topics:

- An analysis of power requirements, which includes an evaluation of the power demands for each transporter for various grades and surfaces within the repository, the development of a typical transporter power cycle, and a determination of the total power demand of all the transporters operating within a typical workday

- Recommended method of power supply, including a review of traction power technology and schematic power supply alternatives

- A review of existing systems.

Sandia National Laboratories has established two evaluation criteria for the transportation system: (1) the transport vehicle weight, including canister payload, is 150,000 lb, and (2) the system must be powered entirely by electrical energy.

2.0 ASSUMPTIONS AND RATIONALE

The following assumptions about the transport vehicle were made for this study.

- Vehicle speed:

  - Maximum sustained vehicle speed is 10 mi/h uphill on a 10% slope
  - Typical vehicle speed is 5 mi/h throughout the repository.

- The vehicle uses rubber tires.

- Rolling friction: The coefficient of rolling friction includes not only the rolling resistance created by the deformation of the contact point between the rubber tires and the type of surface, but also the bearing and sliding friction of the wheels themselves. The coefficients are constant at all speeds:

  - Paved/concrete surface 0.03
  - Tuff surface 0.06.

  The total rolling friction is dependent upon surface friction, which does not vary with speed. Although there are other factors that do vary with speed, the reference speeds are low and these factors will be neglected. The assumed factors are conservative based on industry data and actual conditions may yield lower values.

- Braking. The braking systems and the functional criteria for each system are as follows:

  - Normal braking system: employed during normal operations and maneuvering, the system uses independent circuits for the front and rear brakes; if one circuit fails, the other continues to operate. The normal brake system can bring a loaded transporter, traveling at 5 mi/h down a 10% grade, to a complete stop within 20 ft.

- Parking/holding brakes: designed to hold the loaded transporter stationary on a 25% grade.

- Emergency braking system: automatically energized by a failure of the normal braking system. This braking system is independent of the other braking systems and is capable of stopping a loaded vehicle, traveling down a 10% grade at 10 mi/h, within 30 ft.

- Retardation. When traveling downgrade, the transporter is slowed by dynamic or regenerative braking. Reverse torque, or current, retards the direction of motor rotation (dynamic braking) in electric braking systems. Dynamic braking of a series-wound motor is achieved with the motor either connected or disconnected from the power source. Regenerative braking is a system that converts the drive motors (dc) to generators. Generated power can then be returned to the system if the motor remains connected to the source until a specified maximum voltage is reached, at which point the power is diverted to resistors to dissipate the energy.

- Turning radius. The maximum turning radius for general access is 25 ft.

- Manned vehicle. The vehicle is manned and driven to and from designated areas. Personnel can leave the vehicle at any time except during emplacement operations.

- Vehicle passing. Vehicles will not pass within the same drift.

- Traction power components. The components used to provide total electrical capability should be standard and readily available. It would be desirable to minimize prototype designs and modifications necessary to adapt the hardware to the transporter.

3.0 POWER SYSTEM REQUIREMENTS

The traction power requirements of a transporter depend on the roadbed surface, the grade of the roadbed, the vehicle and canister combined weight, and the vehicle speed. Figure 3-1 illustrates some of the factors involved in determining traction power demand.

The following example gives the method to find force (F) and power (kW) necessary to have the transporter climb a 10% paved grade at 5 mi/h. In this example, the following values are assumed:

Grade = $\emptyset$ = 10% = 5.71° $\quad (\text{Tan } \emptyset = \frac{10}{100} = 0.1)$

$W = 150{,}000$ lb

$W \sin \emptyset = 14{,}926$ lb

$W \cos \emptyset = 149{,}256$ lb

$f_1 = f_2 = 0.03$

Begin by setting the sum of forces vertical to grade = 0

$N_1 + N_2 - W \cos \emptyset = 0$

$N_1 + N_2 = 149{,}256$

assumed $N_1 = N_2$; therefore $N_1 = N_2 = \frac{149{,}256}{2}$

$N_1 = N_2 = 74{,}628$ lb

Next, set the sum of forces parallel to grade = 0

$F - f_1N_1 - f_2N_2 - W \sin \emptyset = 0$

$F - 0.03\,(74{,}628) - 0.03\,(74{,}628) - 14{,}926 = 0$

$F = 19{,}404$ lb

Power is found thus: horsepower = $\frac{\text{force x velocity}}{550 \text{ lbf/s}}$

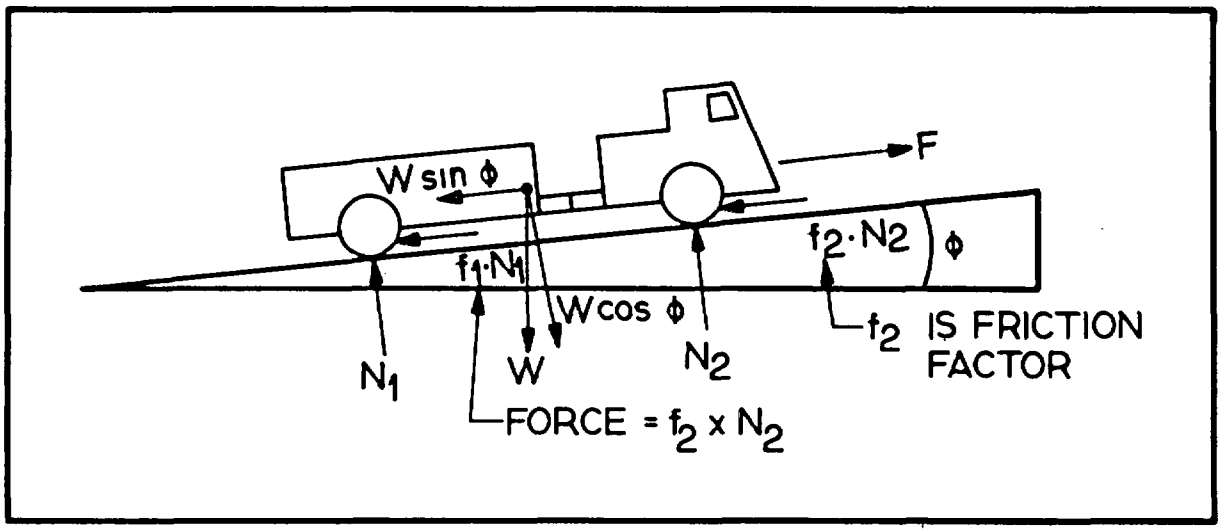

FIGURE 3-1. TRANSPORTER FREE-BODY DIAGRAM

Legend:

ϕ = grade in degrees
W = vehicle weight
W sin ϕ = component of vehicle weight down the grade
W cos ϕ = component of vehicle weight normal to roadbed
$N_1 = N_2$ = upward forces normal to roadbed
$f_1 = f_2$ = coefficient of rolling friction
F = force required to move transporter up the grade

Assumptions:

(1) Center of gravity of transporter is in center of an 18-ft wheelbase.
(2) Wheels do not spin.
(3) Transporter is four-wheel drive.
(4) Although repository conceptual layout varies from 0 to 9% grade (upgrades and downgrades), the example uses 10%.

Force = 19,404 lb from above

Velocity = 5 mph = 7.33 ft/s

Conversion factor: 1 hp = 550 lbf/s

$$Hp = \frac{19{,}404 \text{ lb} \times 7.33 \text{ ft/s}}{550 \text{ lbf/s}}$$

hp = 259 hp.

Since the calculated horsepower is required at the wheels, the input power requirement is determined by dividing the wheel horsepower by the system efficiency. It is assumed that system efficiency is 85%, which includes the gearing and motor efficiencies. Therefore, input horsepower:

$$hp_{in} = \frac{\text{hp out}}{\text{eff.}} = \frac{259}{0.85} = 304 \text{ hp}$$

Input horsepower can be directly converted to electrical power:

1 hp = 746 W = 0.746 kW

Power required = 304 hp x 0.746 = 227 kW.

To move the transporter up a 10% grade at 5 mi/h will require a 227-kW-rated motor.

If the same vehicle is traveling downgrade at 5 mi/h, the total force becomes -10448 lb and the wheel horsepower is -139. Because the gear and motor efficiencies are now taking power from the wheel, the efficiency factor is multiplied to yield a system power requirement of -118 hp or -88kW. The negative sign indicates that braking must be applied while acceleration is continuing.

Figure 3-2(a-b) illustrates the system power requirements for various speeds and grades on paved surfaces and on tuff.

As previously described, the power requirement for the transport vehicle will vary depending upon grade, surface, weight, and speed. The vehicle's power also will

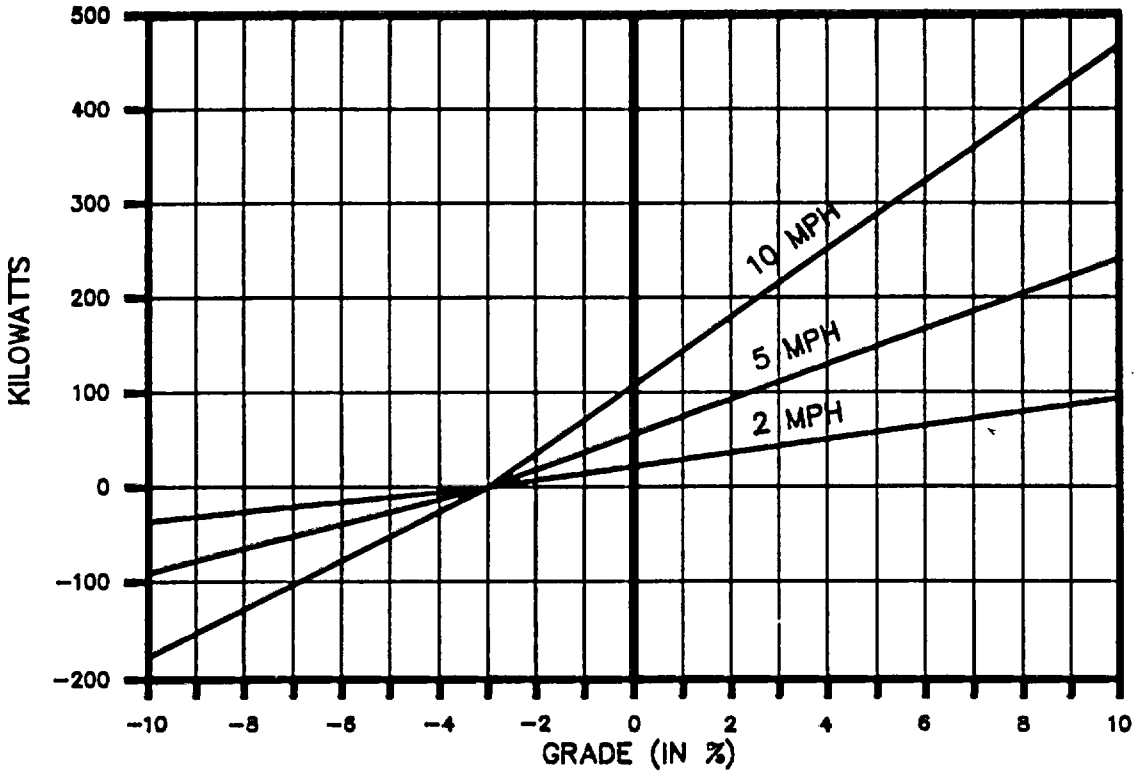

FIGURE 3-2 (a). TRACTION POWER REQUIREMENTS: PAVED SURFACE

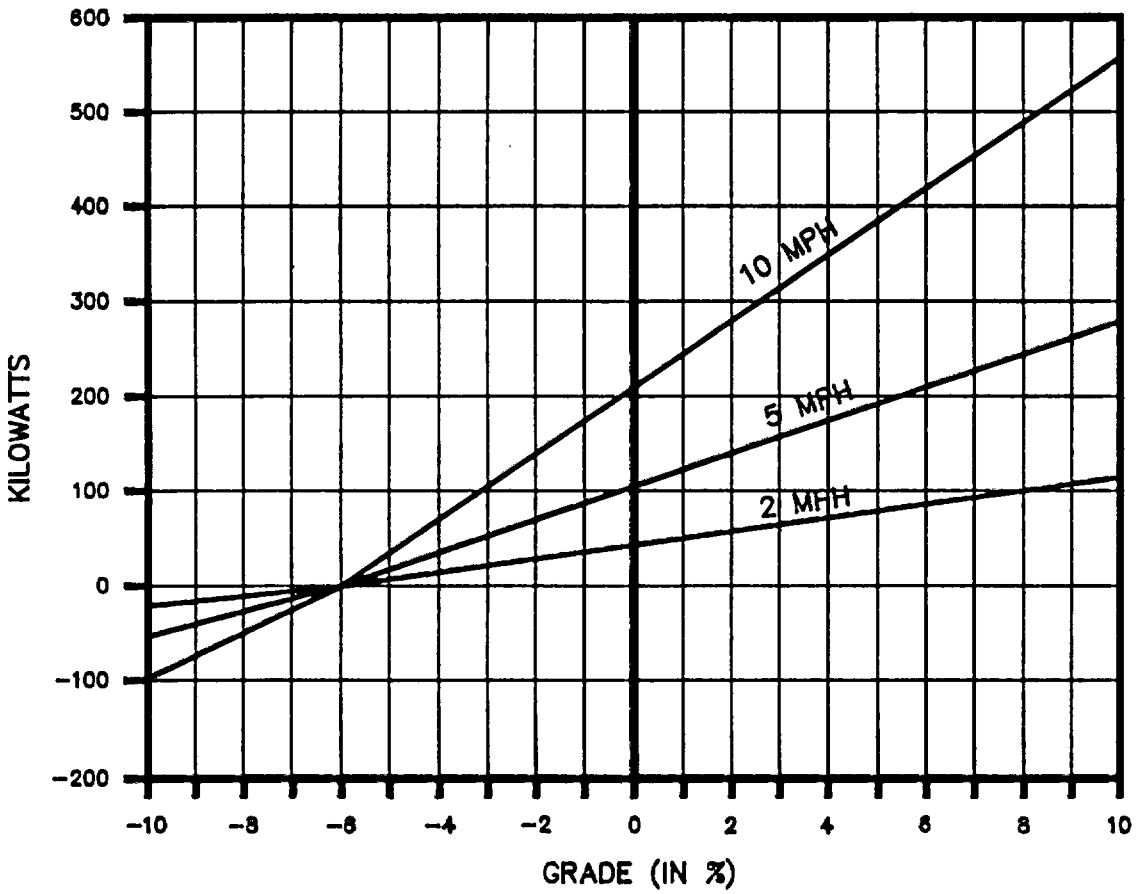

FIGURE 3-2 (b). TRACTION POWER REQUIREMENTS: TUFF SURFACE

vary depending upon the duty requirements within the normal operating cycle. The operating cycle generally consists of:

- Loading waste at the surface
- Transporting canisters down the waste ramp
- Transport within the subsurface repository to the emplacement location
- Positioning and emplacing the canisters
- Travel back to the surface.

The duration, power requirements, and the number of cycles per day are dependent on the speed of the vehicle and the location within the repository where containers are being emplaced. For this study, a typical cycle based upon emplacement near the center of the repository was used. This study also assumed four transporters emplacing a total of six spent fuel containers and four defense high-level waste containers in a typical single-day activity. A day is considered as one 9-h shift.

Figure 3-3 is a general layout of the repository for the vertical emplacement configuration. Although the configuration of the drifts may vary, the general slopes and distances provide the relative information necessary to determine the traction power requirements for this stage of design.

Figure 3-4 shows the typical power demands of a spent fuel transport vehicle for one operational cycle. The power demands were calculated for a constant vehicle speed of 5 mi/h as it traveled its route in the repository through various grades and road surface conditions. During periods of surface loading and emplacement operations, a load demand of 20 kW was used to power the auxiliary systems. The auxiliary systems include hydraulic pumps for ram cylinders and hoists. The positive kilowatt values indicate power demands from the electrical system and the negative kilowatt values represent power generated by the vehicle traveling downhill. Time spent on battery power is not included in the duty cycle.

Figure 3-5 (a, b, c, d) shows the power demand characteristics for each transporter during a typical day. The operations are sequenced so that no conflicts or passing requirements exist in the waste main or waste ramp. Figure 3-6 illustrates the composite power demand requirements for traction power for all transporters during a typical shift.

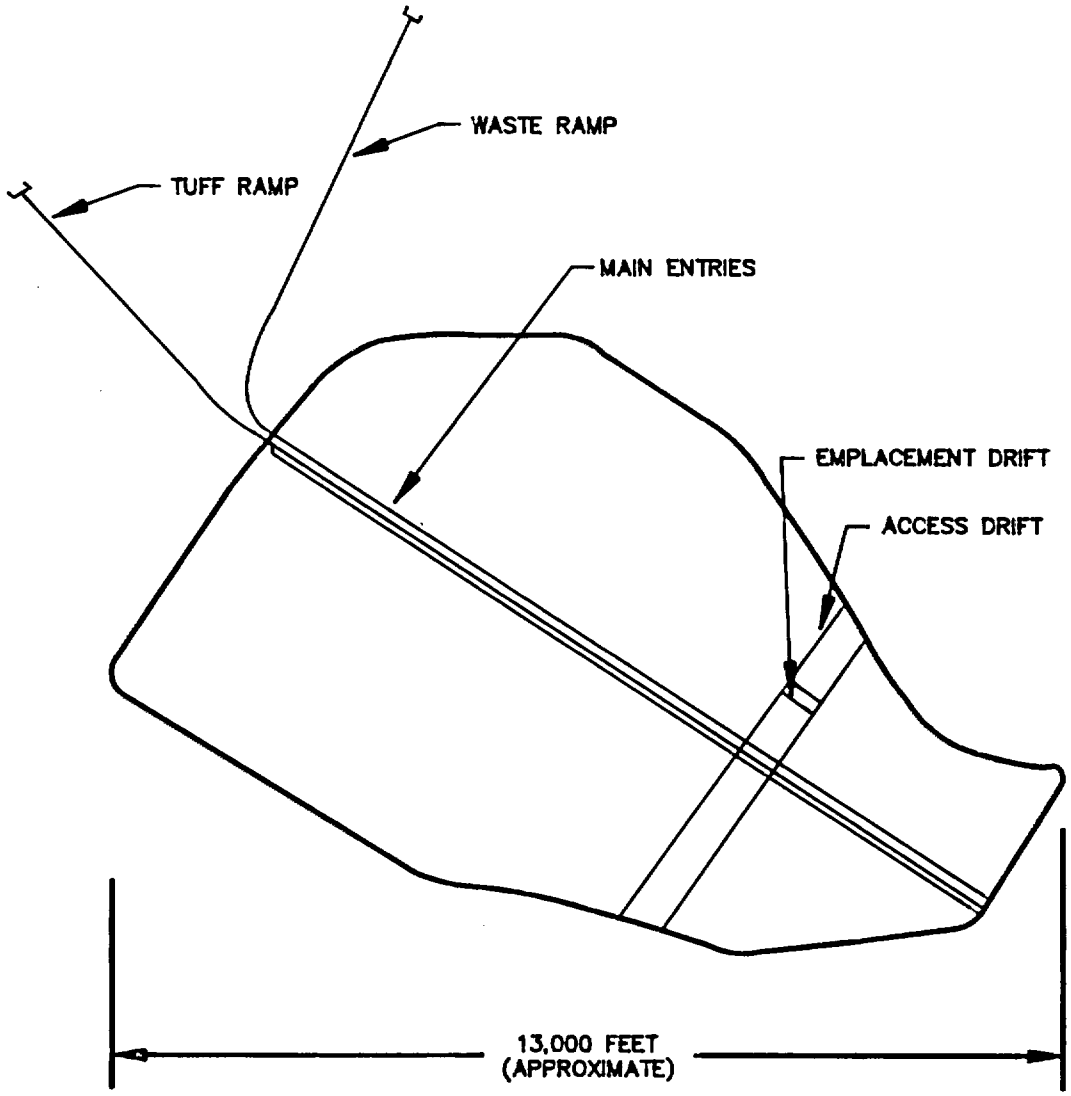

FIGURE 3–3. REPOSITORY LAYOUT: VERTICAL EMPLACEMENT

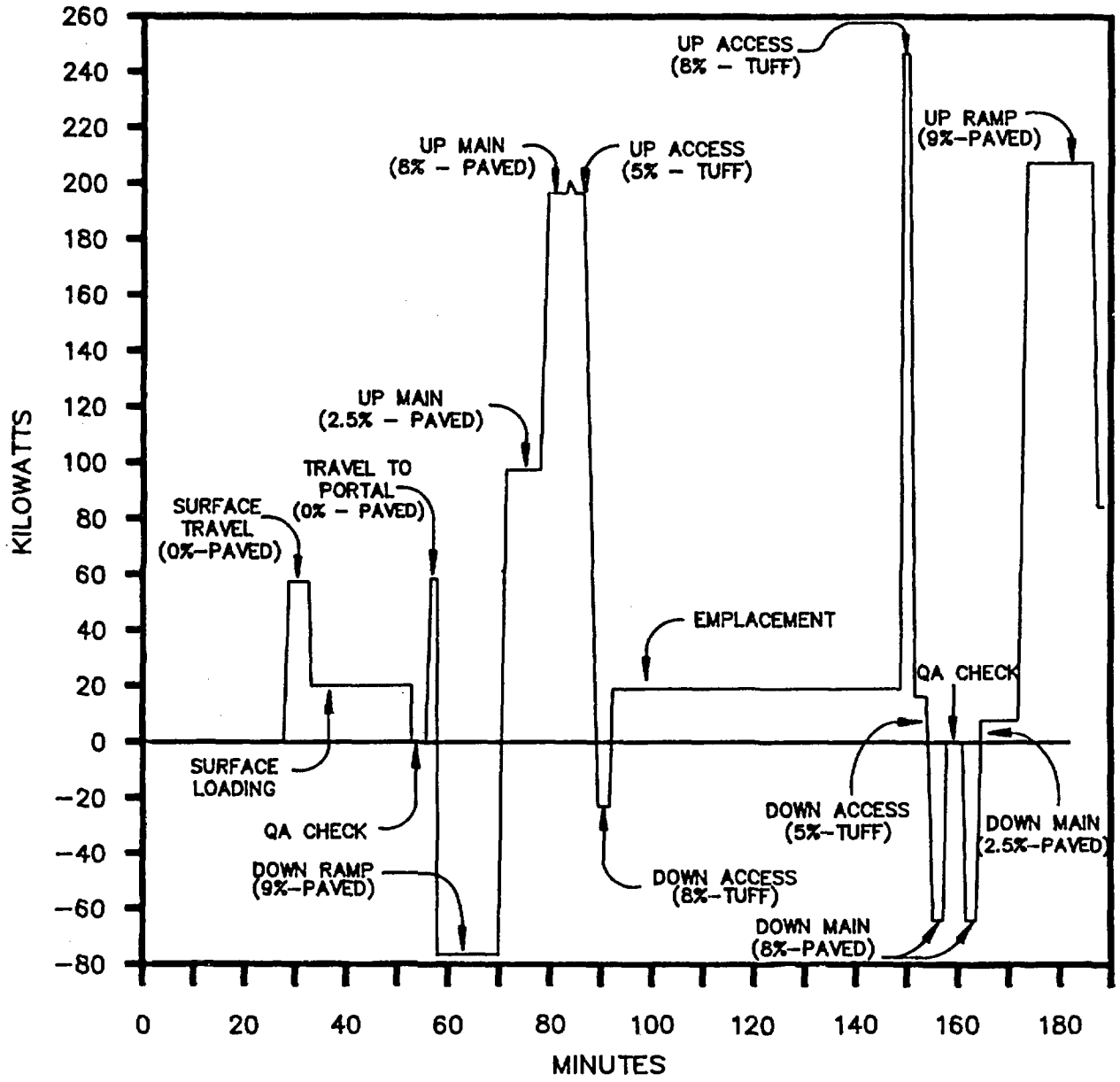

FIGURE 3-4. TRACTION POWER REQUIREMENTS: TYPICAL DEMAND FOR A SINGLE CYCLE

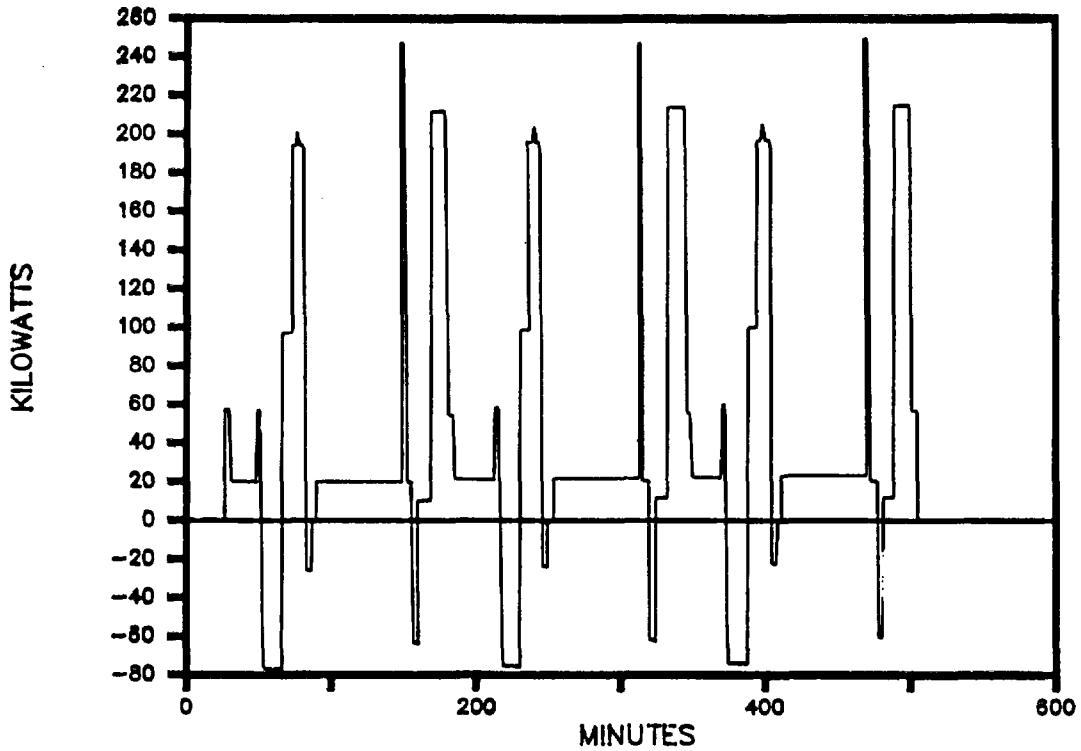

FIGURE 3-5 (a). DAILY TRACTION POWER REQUIREMENTS: TRANSPORTER NO. 1, SPENT FUEL PACKAGES

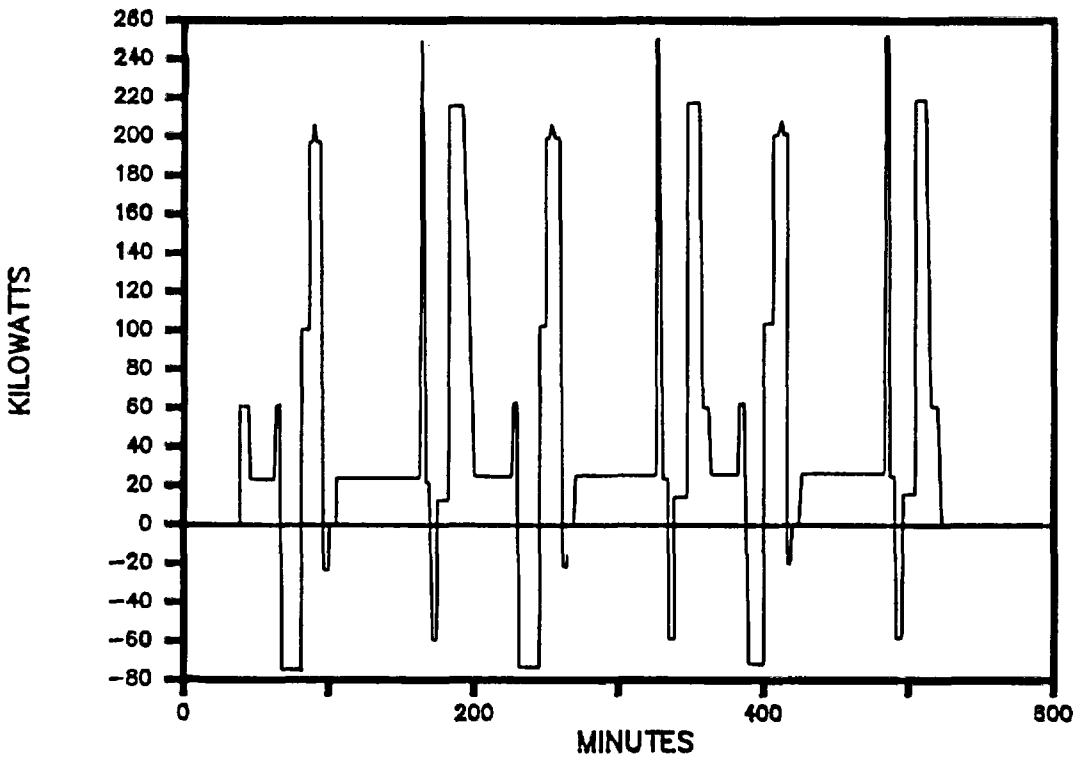

FIGURE 3-5 (b). DAILY TRACTION POWER REQUIREMENTS TRANSPORTER NO. 2, SPENT FUEL PACKAGES

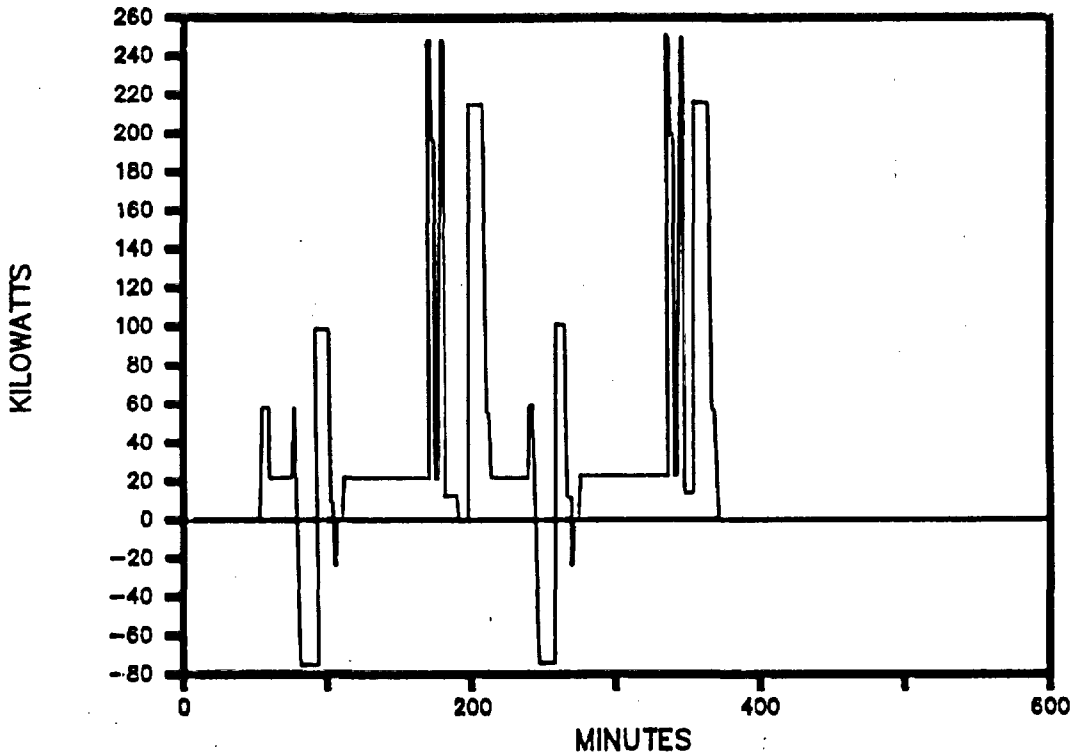

FIGURE 3-5 (c). DAILY TRACTION POWER REQUIREMENTS: TRANSPORTER NO. 3 DEFENSE HIGH-LEVEL WASTE PACKAGES

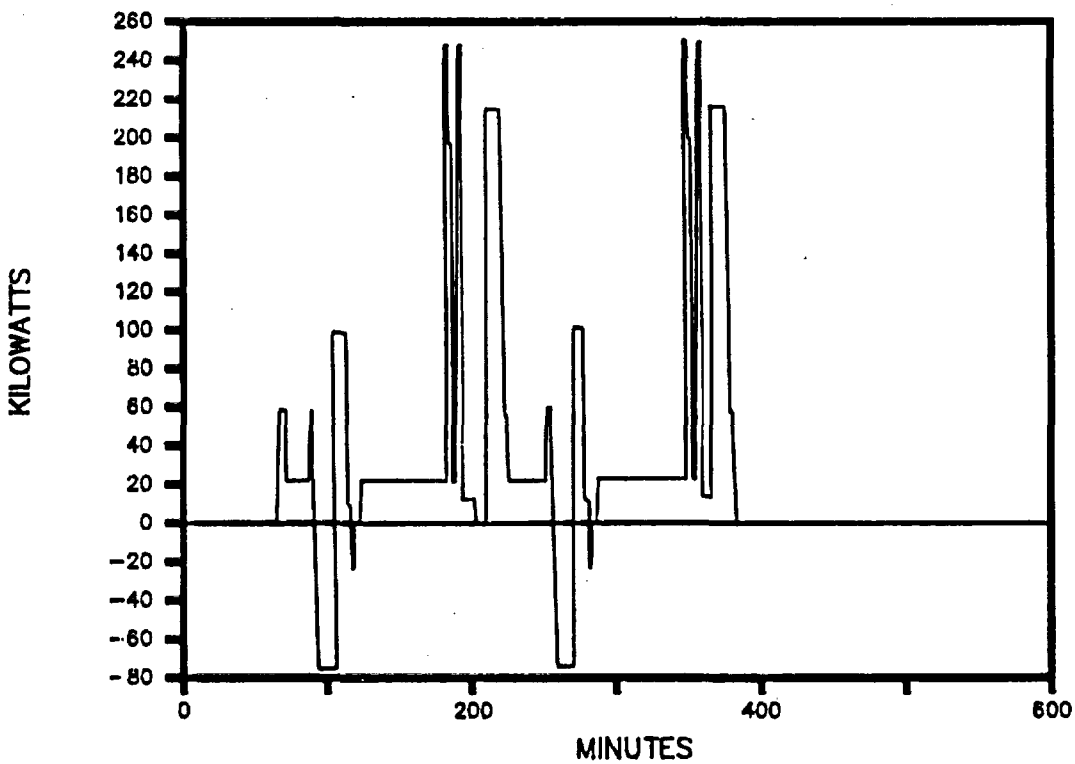

FIGURE 3-5 (d). DAILY TRACTION POWER REQUIREMENTS: TRANSPORTER NO. 4 DEFENSE HIGH-LEVEL WASTE PACKAGES

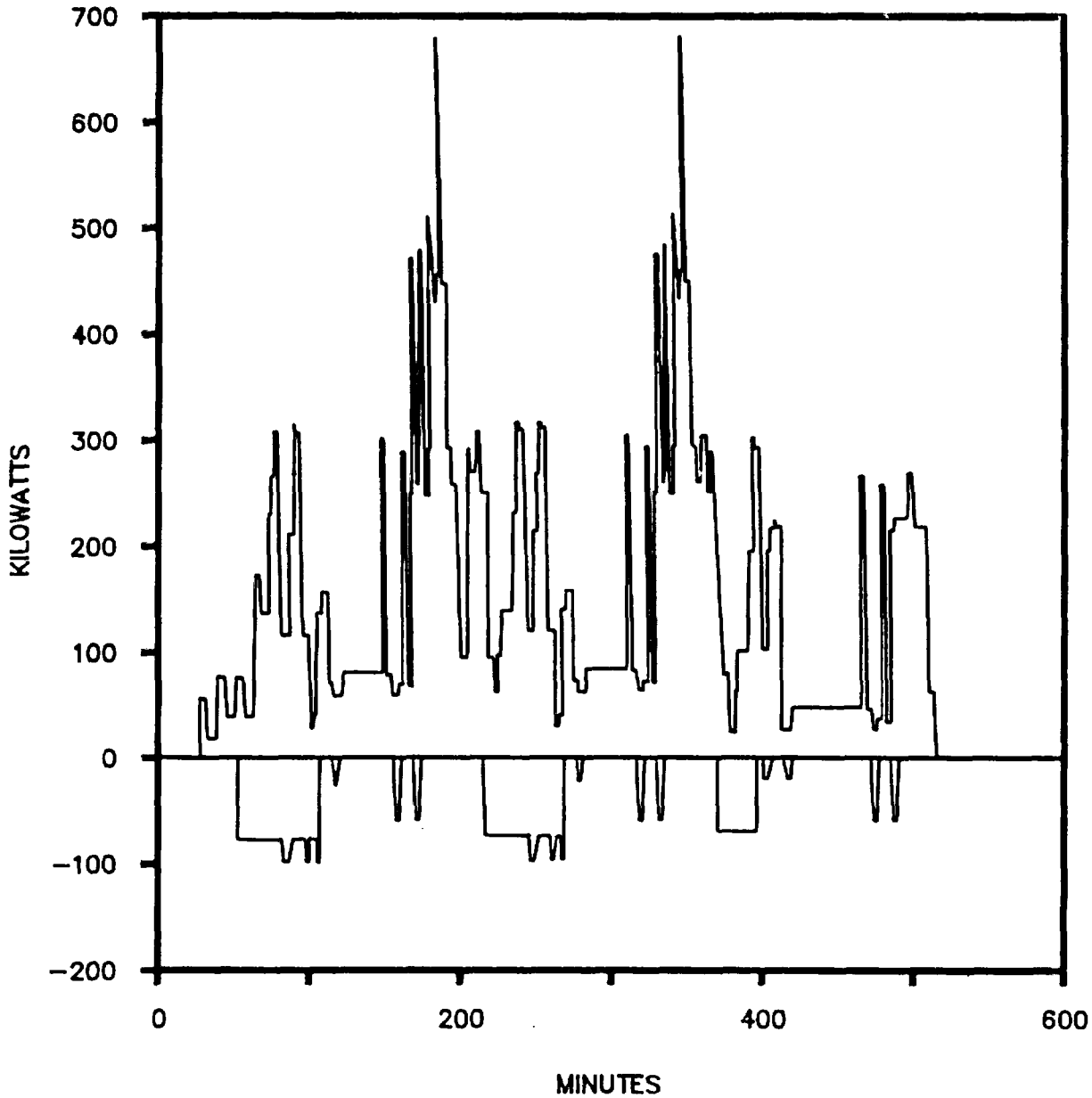

FIGURE 3–6. TRACTION POWER REQUIREMENTS: TYPICAL DAILY DEMAND

composite power demand requirements for traction power for all four transporters for a typical shift. The power demand illustrates a daily work shift whereby transporter nos. 1 and 2 carry three packages of spent fuel per day and transporter nos. 3 and 4 each carry two packages of defense high-level waste per day.

The power demand requirements for both the transporter and the electrical supply system are well within current design and construction practices. Using the maximum speed assumption of 10 mi/h up a 10% grade, the maximum power demand on a paved surface is 454 kW. Because the true capacity of the traction power system depends on its duty cycle, it is not necessary to rate the traction motors to the maximum demand. That is, the cyclical periods of high demand with associated high motor currents, followed by periods of low demand with low motor currents, provide time for motor cooling. Because a primary factor of motor rating is determined by the allowable temperature rise, the cyclical demand pattern expected of the transporter will provide sufficient periods of cooling to allow sizing the traction motors at less than maximum demand. The traction motor(s) of the transporter are estimated to be 400 kW.

The vehicle traction power could be either a single 400-kW-motor (driving the front wheels) or two 200-kW-motors connected in series (one driving the front wheels and one driving the rear wheels).

4.0 POWER SUPPLY METHODS

The power system options that exist include: the type of traction motor (ac or dc), the type of current collection system (powered rail, trailing cable, overhead trolley), ac or dc system, and the layout of power substations.

The three methods of providing external electric power to a vehicle may be used singly or in combination.

The powered rail, used exclusively in rail transit systems, generally consists of a single bus system mounted alongside the rail tracks with suitable protective barriers. Power is delivered to the railed vehicle from a riding shoe or takeoff assembly that is designed for high-speed travel along the powered rail. The return is the riding rail. Because it does not appear feasible to provide a railed transport vehicle due to the turning radius requirements for general repository access and repository operating grades, the concept of a powered rail is not considered practical.

The trailing cable is connected to a power supply source on one end and the vehicle on the other. It is generally "played out" from a cable reel located on the vehicle when traveling away from the power source and wound in when returning. The cable could be supported along the wall during playout but generally just lies on the travel surface. Although distances of 500 ft and more are possible, it is general practice to limit the playout to about 200 ft.

A trailing cable might be used within the repository in conjunction with other systems. The only location where a trailing cable would be applicable is along the emplacement drifts, where, given the current repository layout, about 700 ft of cable would be required. When stored on the vehicle, the cable usually is wound in many layers on a drum; thus, its capacity must be derated to avoid an excess rise in temperature. With the anticipated loading of approximately 244 kW (climbing 5 mi/h on an 8% grade on tuff surface), the necessary cable size would require a very large cable reel. Because cables and cable reels require additional maintenance and replacement, it does not appear practical, based upon this preliminary evaluation, to use a trailing cable.

An overhead trolley system, consisting of overhead wires or buses that provide power to the vehicle by means of a traveling current collector system, appears the most practical for use with the transport vehicles. There are several systems available, depending upon power and control options selected. Table 4-1 lists the trolley system alternatives.

Of the two types of overhead trolley systems in use, dc, the most common, is found in municipal bus and rail systems and in mine applications. Although not as widely used, ac 3-phase systems are gaining use in mine systems.

Table 4-1. Trolley System Alternatives

Overhead Power	Vehicle Control	Traction Motor
ac 3-phase	Motor-generator set	dc
ac 3-phase	Rectifier/inverter	ac
ac 3-phase	Transformer/rectifier-resistor	dc
ac 3-phase	Transformer/rectifier-chopper	dc
ac 3-phase	Transformer/thyristor	dc
dc	Resistor	dc
dc	Chopper	dc
dc	Inverter	ac

4.1 OVERHEAD CONTACT WIRE SYSTEM

The most common overhead dc power distribution system consists of contact wire, support hardware, tensioning hardware, switches, and insulators.

Contact wire is generally made of copper or phosphor bronze and ranges in size from 1/0 to 500 MCM (the most common being 4/0). Contact wire is grooved so that it

can be held with clamps that do not touch the contact surface. Figure 4-1 illustrates a cross section of a typical 4/0 grooved contact wire. (There are several shapes of contact wire that meet ASTM Standards.) Contact wires are generally run straight (except for curves and takeoffs) and are supported every 20 to 150 ft, depending upon the configuration. To reduce voltage drop and/or increase the current carrying capacity of the contact wire, a parallel feeder is run along with the contact wire.

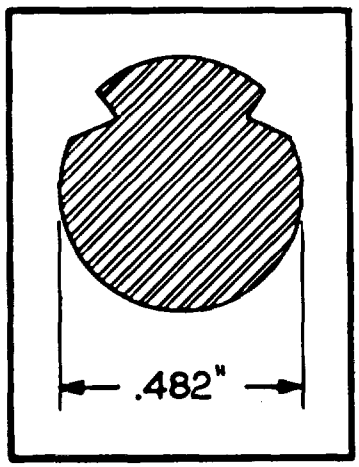

FIGURE 4-1. 4/0 CONTACT WIRE

Within the subsurface repository area, contact wires would be supported from roof anchors. On the surface, wires would be supported by bracket arms mounted to poles. Curves can be accomplished within a tight radius with specific hardware. Takeoffs are fabricated with specific hardware called frogs and can be electrically activated, spring activated, or open, depending upon the application.

Figure 4-2 illustrates the methods of supporting contact wire in subsurface environments and a parallel feeder arrangement that cushions contact wire. Figure 4-3 illustrates surface support arrangements. Figure 4-4(a) illustrates a typical curve section made of standard 30° segments, and Figure 4-4(b) illustrates a typical curve segment.

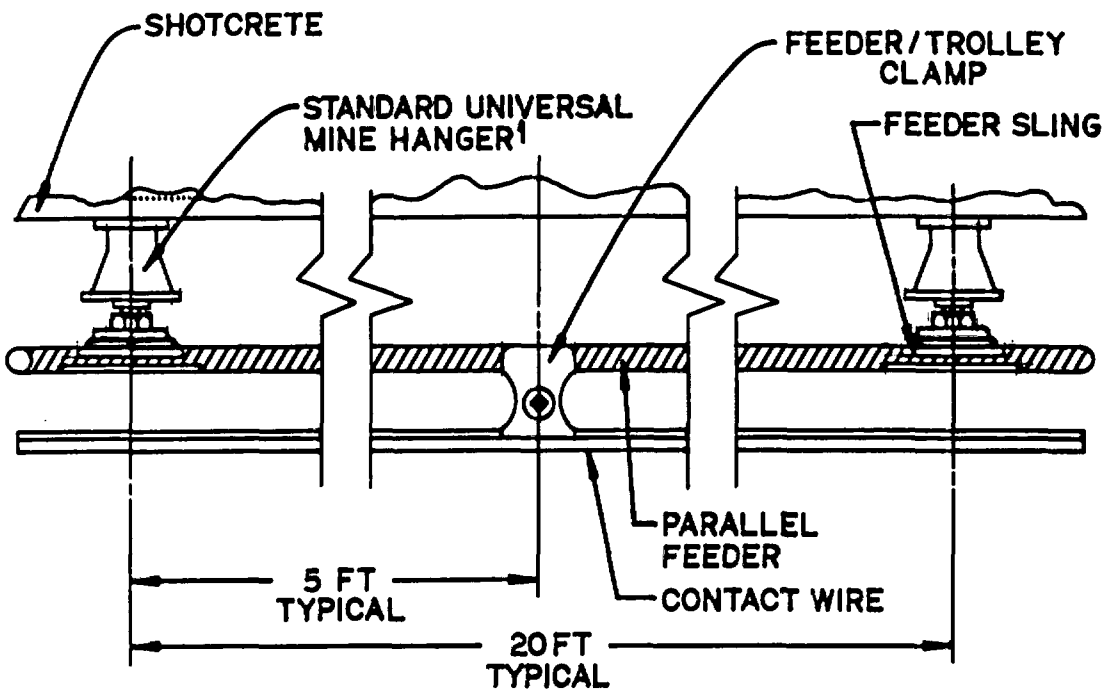

[1] THE STANDARD UNIVERSAL MINE HANGER CAN BE SUPPORTED FROM EITHER A 5/8-IN. ROCK BOLT OR A 1-1/4-IN. PIPE SECTION ADJUSTED FOR HEIGHT VARIATIONS.

FIGURE 4-2. SUBSURFACE CONTACT WIRE SUPPORT

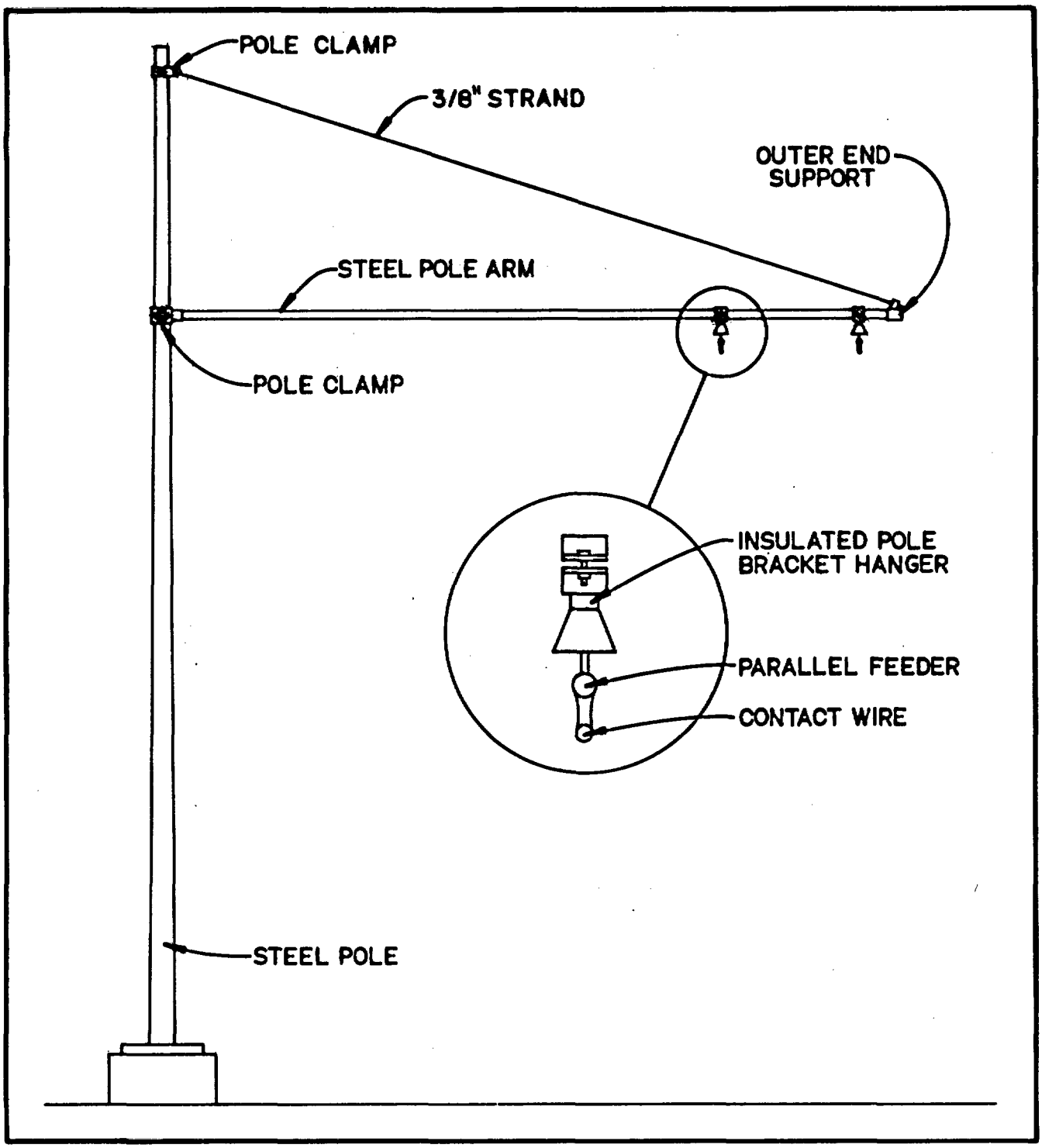

FIGURE 4-3. SURFACE CONTACT WIRE SUPPORT

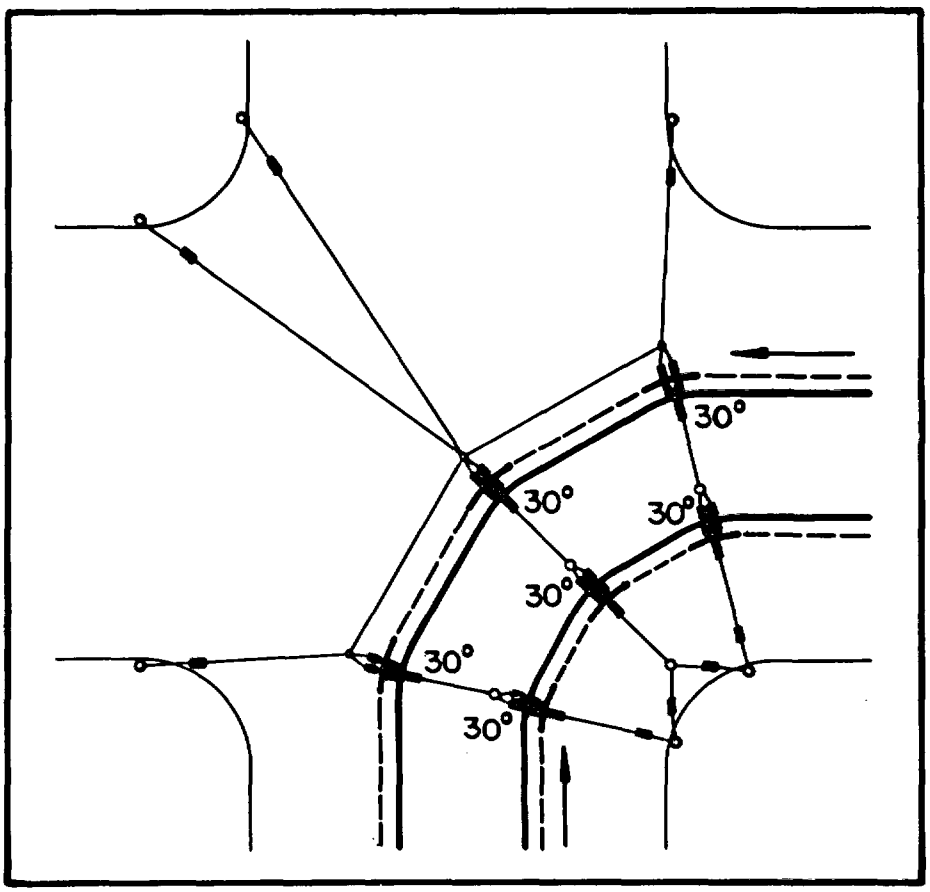

FIGURE 4-4 (a). TYPICAL CURVE SECTION

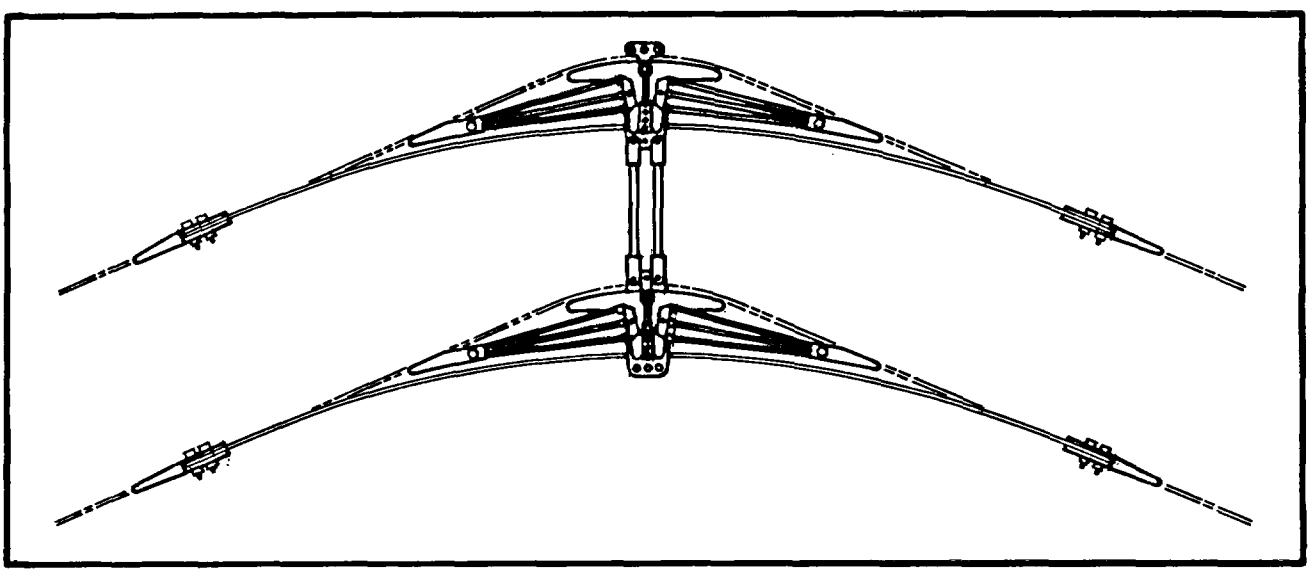

FIGURE 4-4 (b). TYPICAL CURVE SEGMENT

Overhead dc bus systems are generally used when contact wire is inadequate for the magnitude of current to be carried. Although overhead buses require less support than overhead contact wires, they are difficult to bend in tight curves and takeoffs. Contact wire, which is suited for the application within the repository, appears to be the best solution for a dc trolley system.

4.2 OVERHEAD AC BUS SYSTEMS

Although the dc overhead contact wire system is the most widely used method, there have been recent developments and applications of ac overhead systems in mines. It is more efficient to power vehicles with ac than with dc; also, ac is necessary for certain control schemes that are discussed in Section 5.3.2. The ac overhead systems have been exclusively developed using a bus and consist of either three phases (three buses) or three phases plus a neutral (four buses).

Overhead bus installations require higher curve radii, typically 50 ft, than overhead contact wires. Figure 4-5(a) illustrates a four-wire bus system used in a Canadian mine. Figure 4-5(b) illustrates a three-wire bus prototype system used in a mine in Sweden. The four-wire bus system includes a T-bar on which an overhead trolley rides; the trolley is connected to the vehicle by means of a trailing cable. The three-phase three-wire system provides power to the vehicle by means of a current collector system that connects to the overhead bus by raising a trolley arm. The trolley arm can be automatically connected and disconnected by an operator.

Because of the high resistance and high maintenance associated with trailing cables, the three-phase/three-wire overhead bus system would be the most suitable ac system for overhead trolley power distribution. Spreading the load over multiple, larger diameter conductors results in lower circuit resistance over longer distances.

4.3 DC CURRENT COLLECTION SYSTEMS

The two common methods of transferring power from the overhead contact wire to the vehicle are by trolley pole or by pantograph. A trolley pole consists of a spring-mounted pole assembly with a curved carbon shoe that rides along the contact wire. A

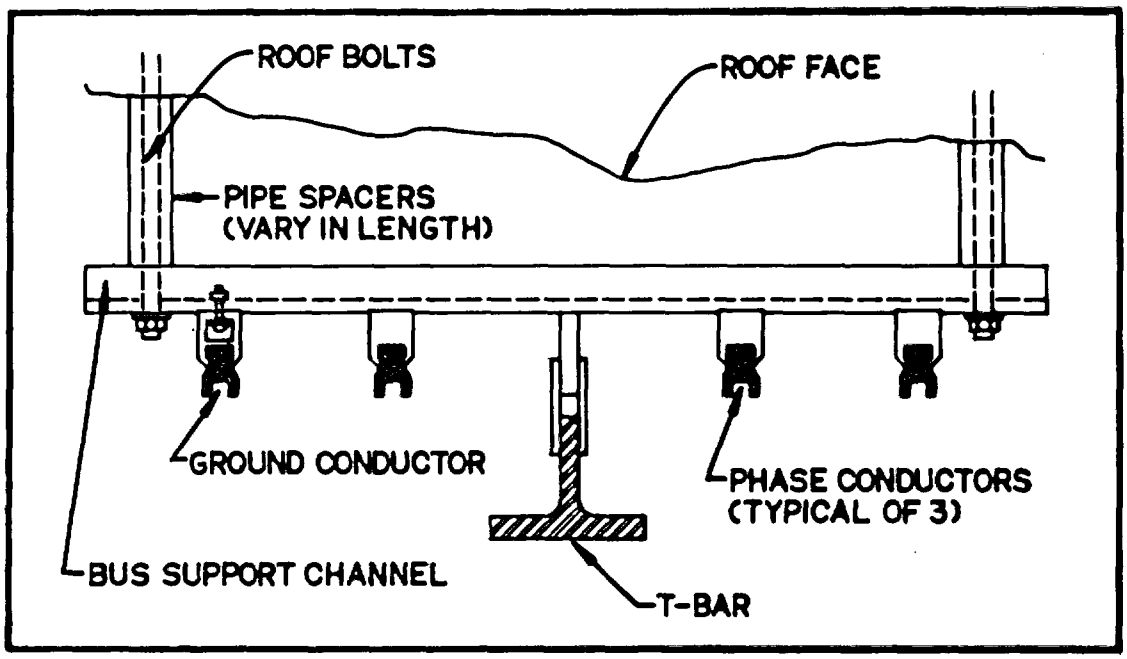

FIGURE 4-5 (a). AC OVERHEAD BUS SYSTEM (4 WIRES,3 PHASE)

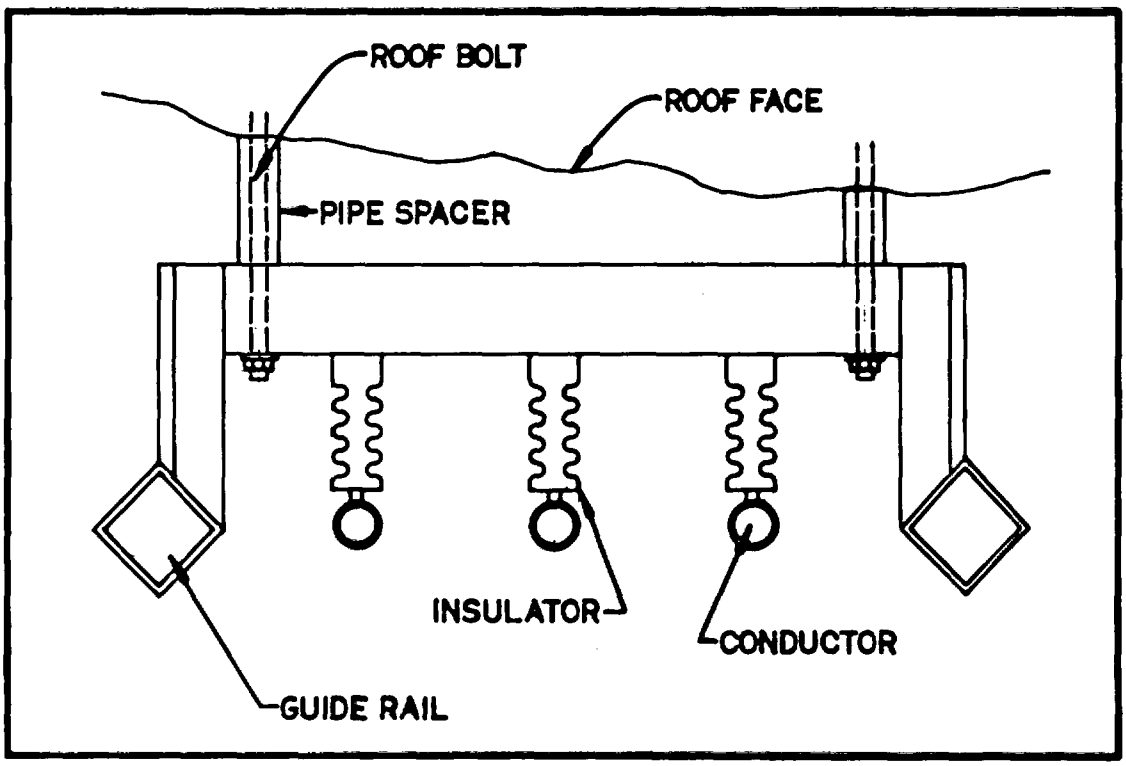

FIGURE 4-5 (b). AC OVERHEAD BUS SYSTEM (3 WIRES,3 PHASE)

pantograph is a collapsible diamond-shaped frame or single bent arm assembly with a long horizontal bar that bears at right angles to the contact wire.

Figure 4-6(a) illustrates a single trolley pole assembly and Figure 4-6(b) illustrates a mine-type trolley shoe. The trolley pole arrangement affords the vehicle increased lateral movement but a shorter turning radius. For the vertical emplacement configuration, the overhead contact wires could be located along the side of the emplacement drift to allow clearance for raising the transporter cask.

Figure 4-7 illustrates a single-pole, single-shoe pantograph. Pantographs are most widely used on train systems where a single contact wire or circuit is installed overhead and the return circuit is a "third rail".

The trolley pole assembly is designed to trail the vehicle. Although the vehicle can be reversed and the trolley pole backed up at slow speeds, normal procedure for sustained reverse operation is to lower one set of poles and raise another (or turn the first set of poles 180°). Although raising and lowering poles is historically a manual routine, there are systems available that automatically lower and raise the poles. However, an automatic operation requires that the vehicle be precisely positioned.

The pantograph holds pressure against the contact wire by springs. Lateral movement of the vehicle is constrained by the width of the horizontal contact bar, and the turning radius is more limited than with a trolley pole. The pantograph can travel in either direction, however, and is easily disconnected and reconnected to the contact wire. The assembly is generally raised by springs and lowered by air pressure or electric controls. For the vertical emplacement configuration, the contact wires could be routed directly overhead at sufficient separation to allow clearance for raising the cask.

4.4 AC CURRENT COLLECTION SYSTEMS

The current collection system used for the three-phase three-wire bus system (Figure 4-5(b)) consists of an assembly mounted to a movable arm with guide rails that provide both a guide and a bearing surface for the collection system. The current is

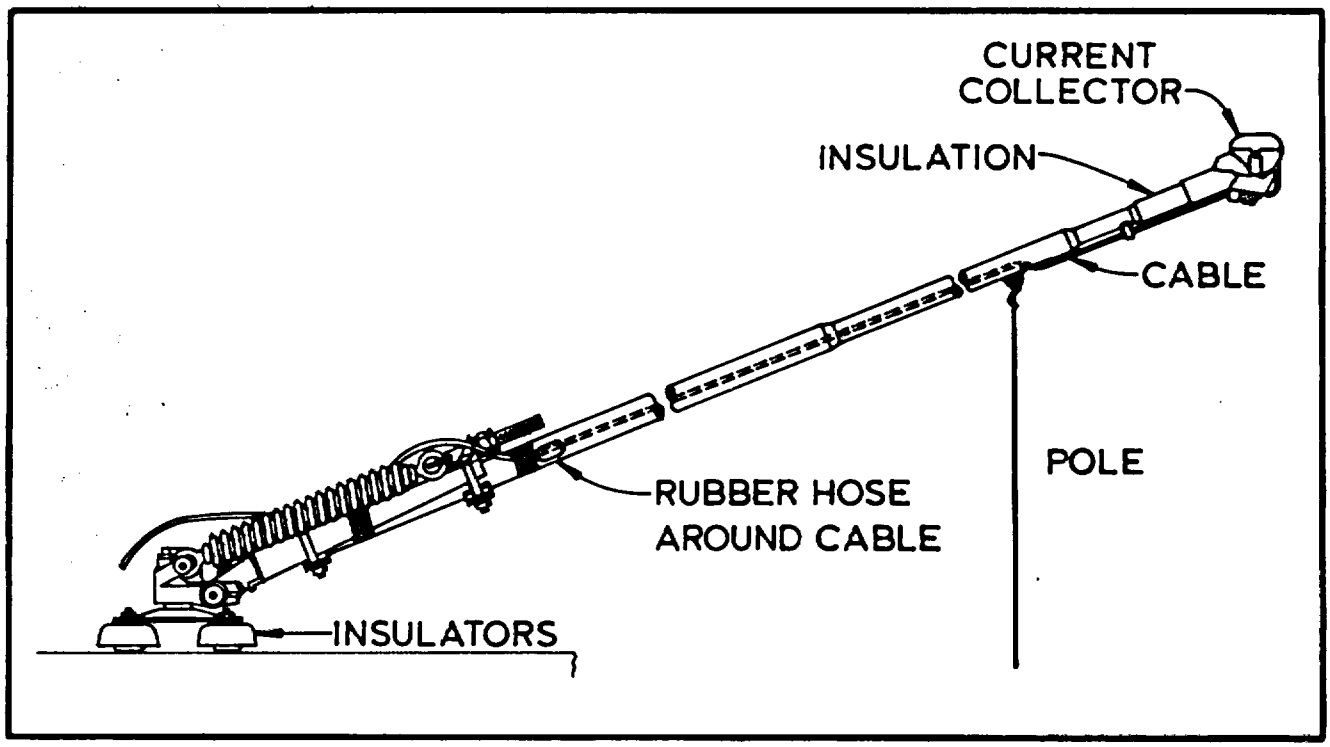

FIGURE 4-6 (a). TYPICAL TROLLEY POLE

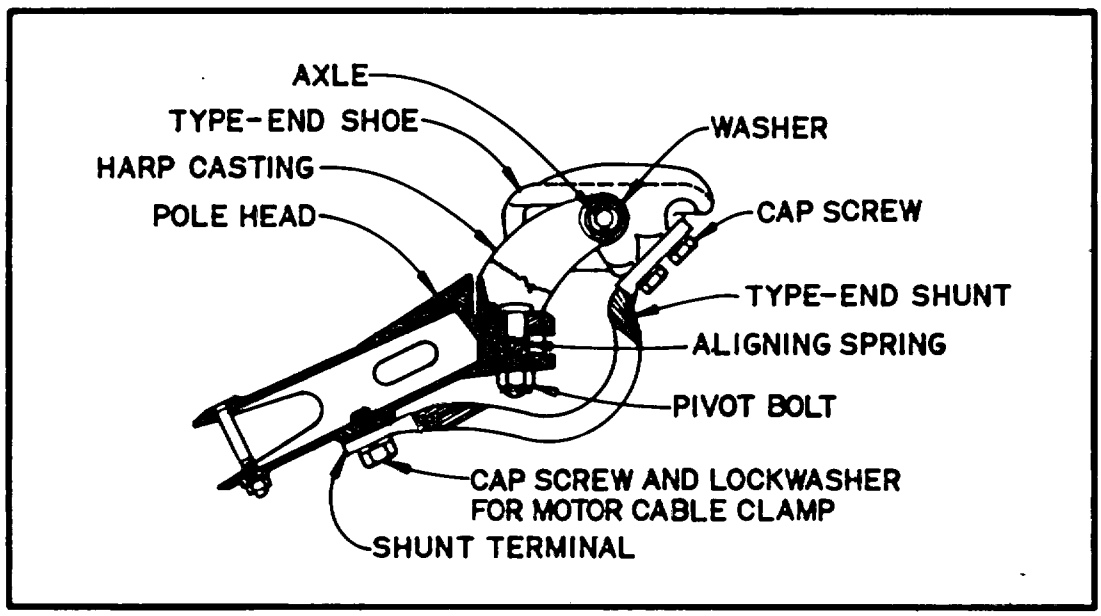

FIGURE 4-6 (b). TYPICAL MINE TROLLEY SHOE

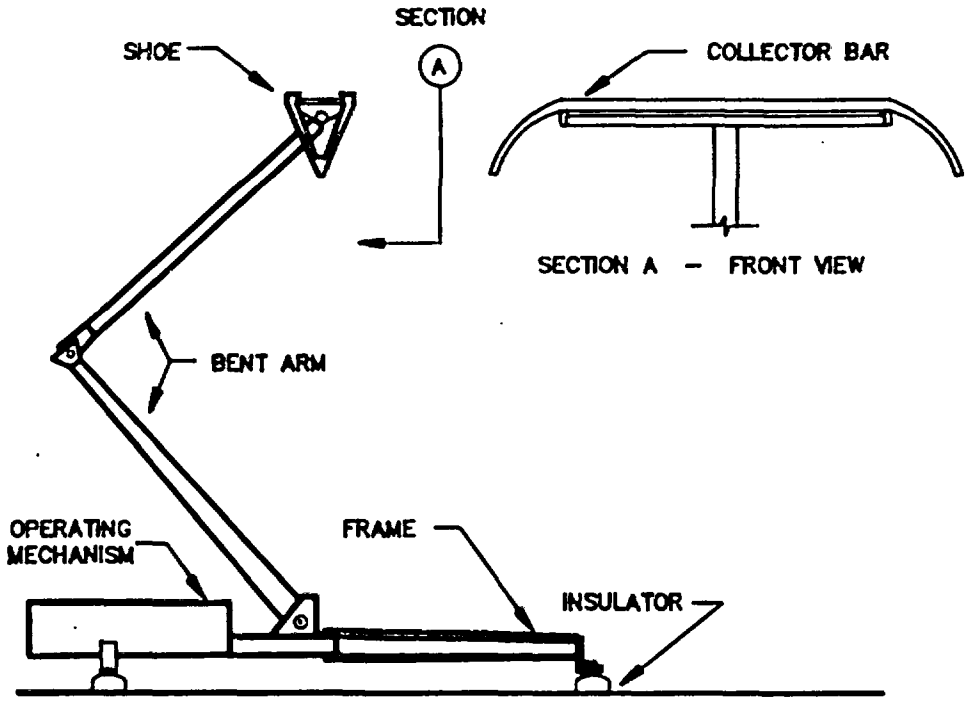

FIGURE 4–7. SINGLE–POLE, SINGLE–SHOE PANTOGRAPH

collected from the bus by riding shoes and transmitted to the vehicle by cable. The current collector can be raised and lowered and automatically connects to the overhead bus by the operator. Although the vehicle must be positioned with precision to the current collector, the system contains sensors that seek the connection.

5.0 TYPICAL SYSTEM SCHEMATICS

The electrical traction power system includes the utility service or main supply feeders, wayside substations, overhead conveyance, current collectors, and vehicle electric systems. Based on the anticipated load demand profile, it appears that wayside substations used to supply power to the overhead lines should be located at approximately 5000-ft intervals. (The overhead conveyance and current collectors are discussed in Section 4.)

5.1 MAIN SUPPLY FEEDERS

Wayside substations within the repository would receive medium-voltage power from the main substations. Although this voltage has not been finalized, it is assumed to be 13.8 kV. In order to provide a redundant system, each wayside substation would be supplied by secondary lines originating from separate sources, with the two supply feeders alternating as the primary source for all of the wayside substations. In the event of a complete repository power outage, diesel engine-driven generators located on the surface would provide temporary backup power.

Secondary power would be routed within the subsurface repository through overhead conduits or mine power armored-type cable installed on opposite sides of a drift or ramp to provide maximum physical separation. Feeders on the surface would be installed in underground ductbanks or overhead lines as determined by preliminary engineering.

5.2 WAYSIDE SUBSTATIONS

Wayside substations consist of high-voltage fused switches, transformers, protective relays, rectifiers (for dc overhead system if that system is used), and supply breakers. Each substation would be double-ended (supplied by separate feeders). Figure 5-1 is a single-line diagram that illustrates the primary supply and substation arrangement. The overhead contact wire is insulated at central intervals between substations, with the insulated section shunted through a gap breaker, which is

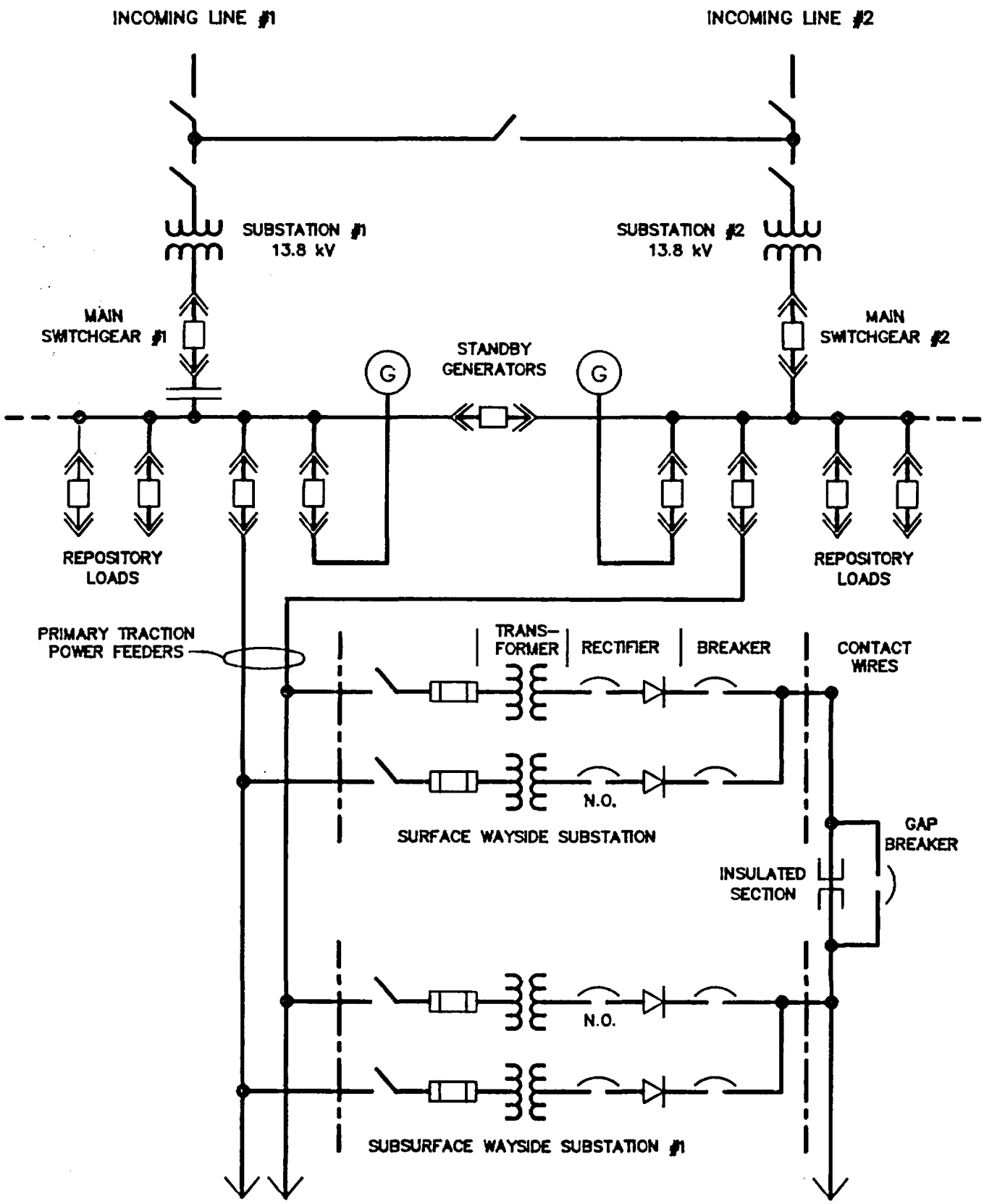

FIGURE 5–1. SINGLE LINE DIAGRAM

normally open. The gap breaker closes only if a wayside substation outage occurs and the overhead line requires power from an adjacent substation.

5.3 VEHICLE ELECTRIC SYSTEM

The vehicle electric system consists of the traction power motors, dynamic and/or regenerative braking equipment, controls, and auxiliary apparatus. The type and level of the power brought on board the vehicle depends upon the systems selected.

5.3.1 Traction Motor Alternatives

Traction motors can be built to operate on either ac or dc voltage; dc is most widely used. The two basic types of dc motors are the shunt-wound motor and the series-wound motor; series-wound is the motor preferred for transportation use because it produces a higher torque at low speed.

AC traction motors are of the standard induction motor design (no brushes or commutators) and are therefore less expensive and easier to maintain than their dc counterparts. If the ac motor is driven above its synchronous speed, it will automatically provide regenerative braking for transporter running speed control but will not provide "braking to a stop" functions. To brake ac motors dynamically, the ac power must be removed and dc power must be applied to two of the three motor windings so that the motor acts as a dc generator; however, this requires a considerable amount of additional control equipment and is not generally recommended.

The shunt-wound dc motor is configured with the field winding connected in parallel to the armature winding and provides good speed regulation. Unlike ac motors, a dc motor will act as a generator when driven at any speed because it has no "synchronous" speed. Hence, regenerative braking can be easily obtained when controlled by an adjustable voltage control system (see Section 5.3.2 for further

discussion). Dynamic braking can be provided with relatively few additional components and is used on the constant-voltage control systems.

The series-wound dc motor has the field winding connected in series to the armature winding, which offers high torque at low speed, as mentioned earlier. Reverse torque, or current, retards the direction of motor rotation (dynamic braking) in electric braking systems. Regenerative braking, however, is not possible in a series-wound motor because the motor would reach a dangerous overspeed condition before the torque had a chance to reverse. Dynamic braking of a series-wound motor is achieved with the motor either connected or disconnected from the power source. The power that is generated can be returned to the system if the motor remains connected to the source and until a specified maximum voltage is reached; then, the power will be diverted to resistors to dissipate the energy.

DC traction motors are generally rated from 550 through 750 V, with a nominal rating of 600 V being the most common. If the traction motors are operating in parallel, the on-board power supply is 600 V (nominal). If two motors are connected in series, a 1200-V (nominal) supply rating is necessary. Although a transformer could be placed on the vehicle to allow use of nearly any ac overhead voltage, it would be best to select an overhead voltage that could be used directly by the vehicle. Keeping the overhead system voltage high will minimize system losses and reduce overhead conductor cost by reducing ampere demand.

Two motors connected in series, with each motor driving two of the four wheels, appears to be the most favorable arrangement. Because the series connection supplies equal current to each motor's armature circuit, each axle will be driven at the same power. Thus, the transporter's tires wear equally and very little or no wheel slip occurs during acceleration.

5.3.2 Vehicle Control Systems

Several methods of vehicle control are available based on the traction motor type and overhead supply type. The most widely used control is for dc traction motors

with dc overhead supply, although more recent mine vehicle experience includes control for dc traction motors with ac overhead supply.

DC motor base speed control is achieved primarily by varying the motor's terminal voltage. Speeds higher than base speed are reached by reducing the amount of field current supplied to the motor. The oldest, and simplest, method for base speed control, step control, involves inserting and removing resistance in the motor armature circuit. Figure 5-2 illustrates this control scheme. Although effective, the base speed must be adjusted in steps by this method. Some variations between steps can be achieved, but only by controlling the field current.

A more recent development is the chopper control, which can provide continuously adjustable armature and field voltages to a dc motor. Figure 5-3 illustrates this control scheme. Generally, chopper control schemes are more expensive than resistance control and require more sophisticated maintenance.

Thyristor-converter control technology allows dc motor speed control with ac incoming service. Motor speed is continuously adjustable by this method and precise control can be achieved. In Figure 5-4, which illustrates this control scheme, there are two dc traction motors connected in series. For this case, the incoming ac voltage is 1000 V. As an alternative, the motors could be installed in parallel, which would reduce incoming voltage to approximately 500 V and increase overhead wire or bus capacity (as referenced in paragraph 5.3.1).

5.3.3 Off-Wire Vehicle Operation

Certain circumstances may require the vehicle to maneuver while disconnected from the overhead power system. Disconnection from the overhead system could be required for:

- Maneuvering turns with a radius of 25 ft or less

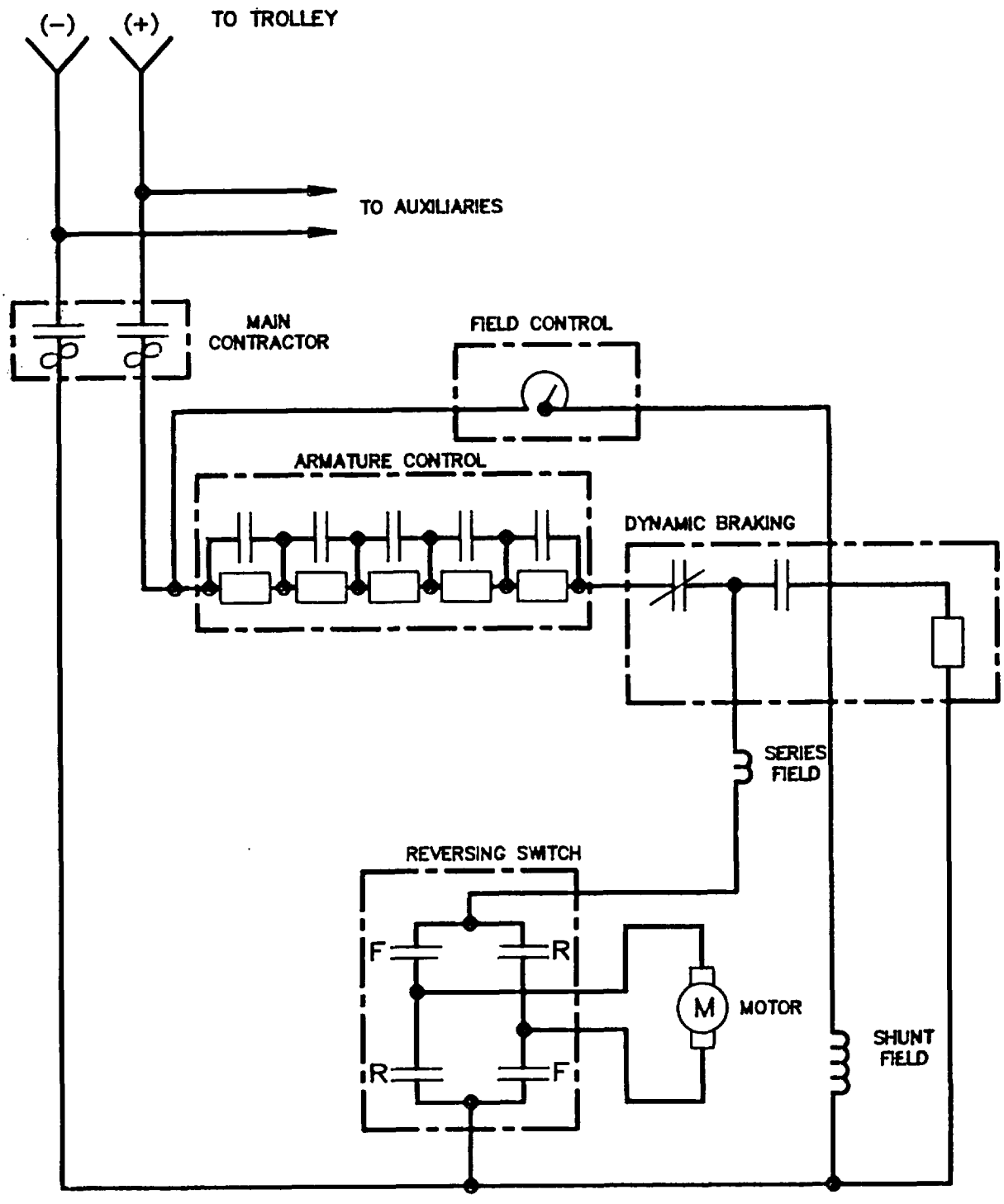

FIGURE 5–2. DC TRACTION: STEP CONTROL

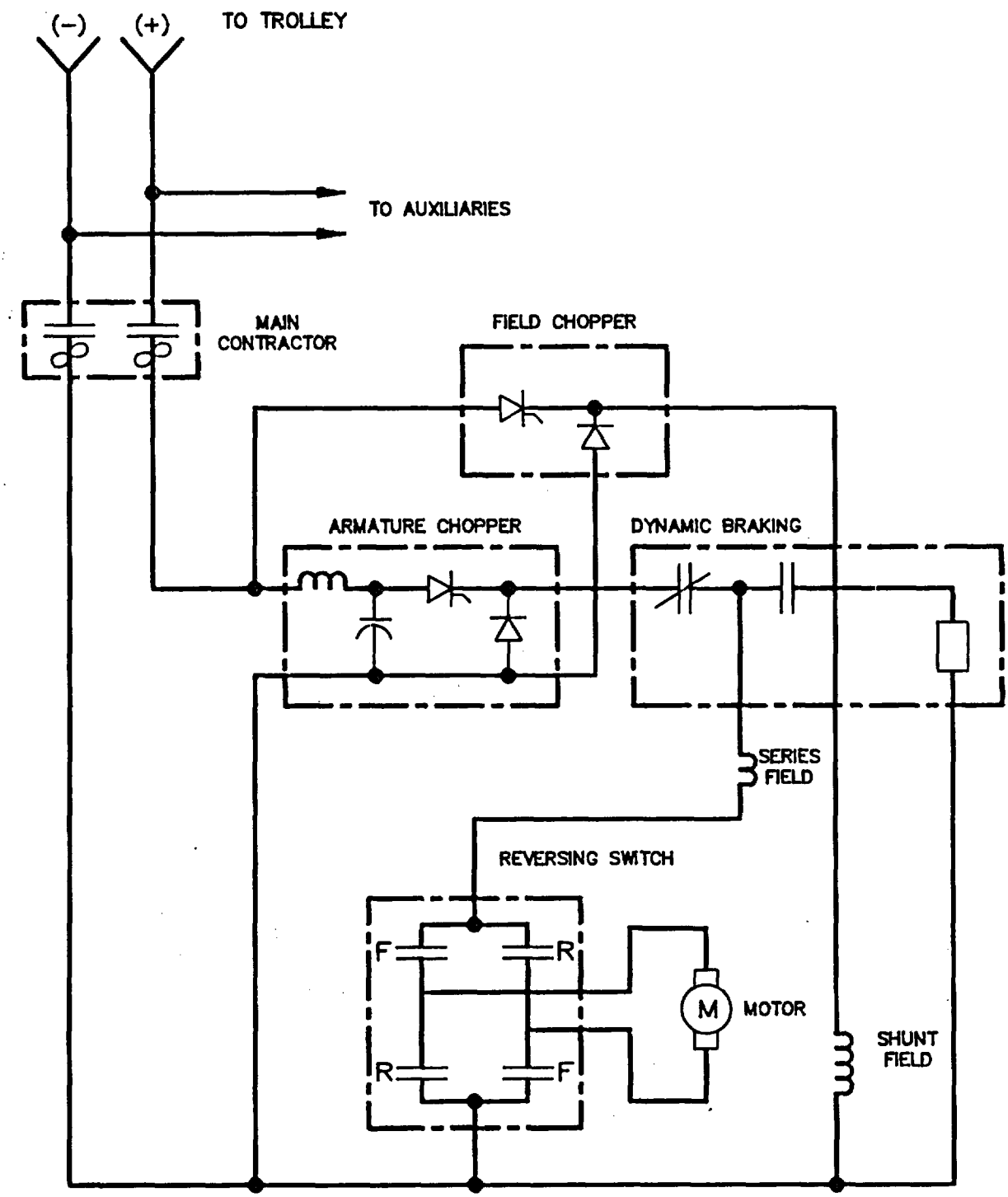

FIGURE 5–3. DC TRACTION: CHOPPER CONTROL

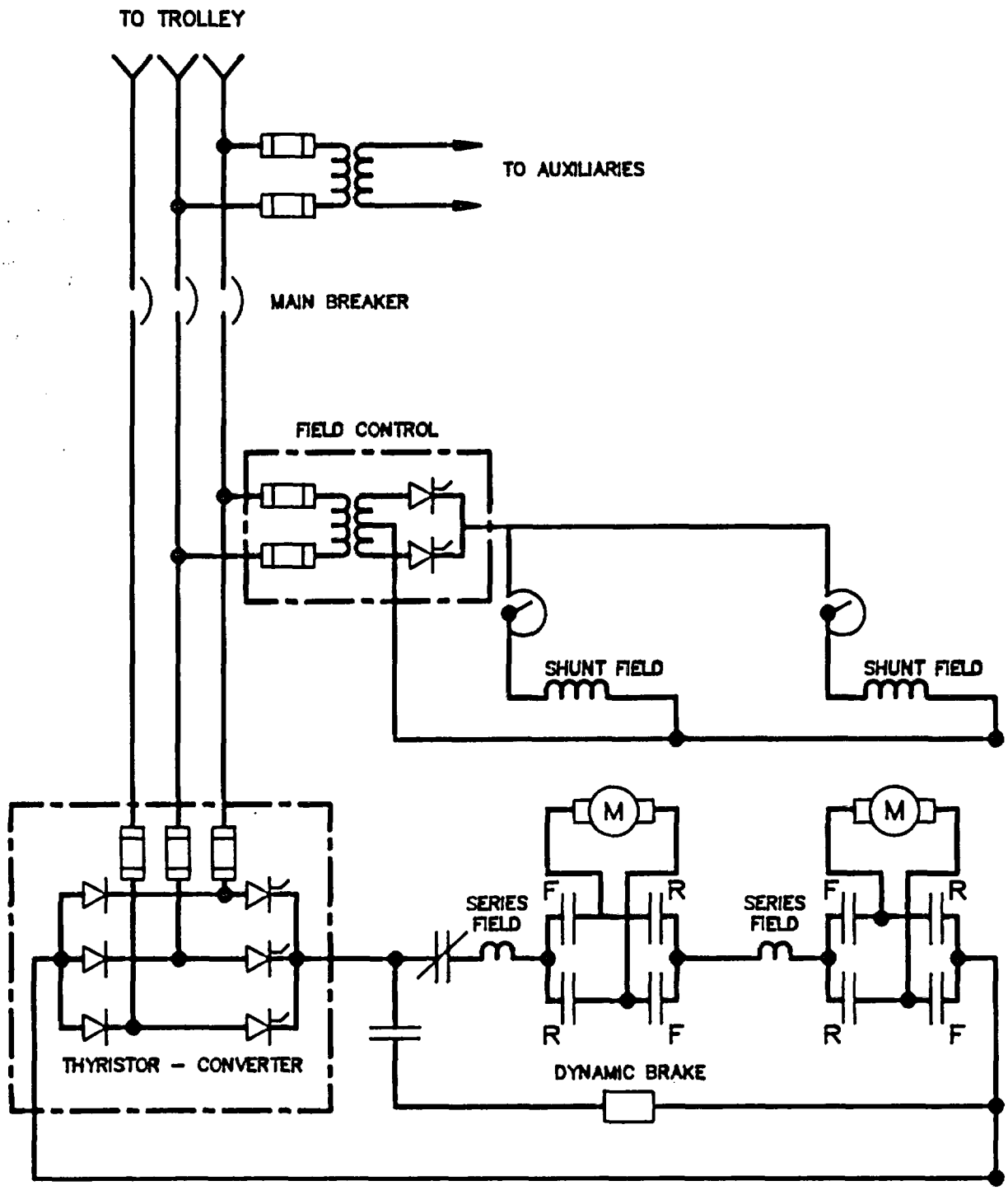

FIGURE 5-4. DC TRACTION: AC INPUT POWER

- Maneuvering tight-radius takeoffs from waste main to access drifts, or from access drifts to emplacement drifts, if an overhead bus system were used

- Canister emplacement

- Access to repair shops

- Emergencies.

The two systems currently used for off-line operation are auxiliary engine-driven generators and batteries. Because the primary objective of this study is to evaluate a totally electric system, an engine-driven generator is not considered.

It would be impractical to provide a battery system for full-power operation for any extended period of time. However, because battery power would be used primarily for vehicle turning and limited travel, the size and capacity requirements of the battery would not be great. A typical battery rating of 280 V at 150 Ah is a practical size with sufficient capacity to perform needed tasks. The battery would charge when the vehicle is connected to the overhead line; when the vehicle is idle, such as for overnight storage, the battery could be kept charged by means of an umbilical connection from a disconnect plug to a power supply source. Figure 5-5 illustrates a battery power system.

An evaluation of battery size and type to include the tasks of access drift travel and canister emplacement can be performed when transporter specifications are finalized should longer operation off trolley power be necessary.

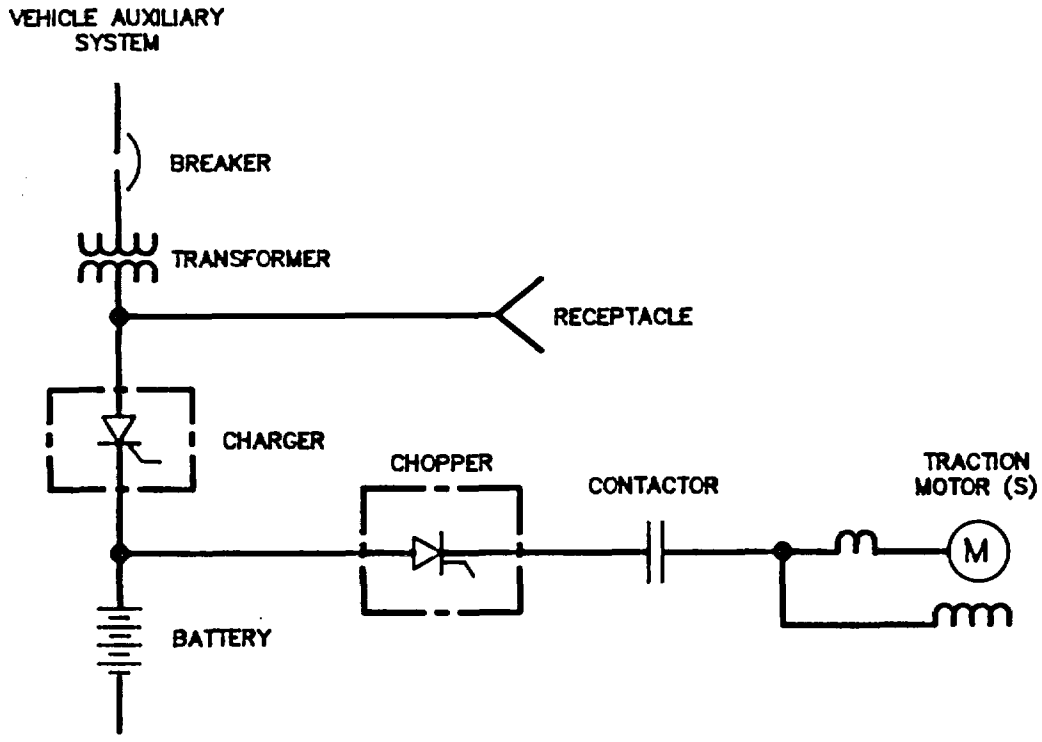

FIGURE 5–5. BATTERY POWER SYSTEM

6.0 EXISTING SYSTEMS

Only a limited number of all-electric vehicles currently in use match the general characteristics of the waste transporter. There are, however, a number of vehicles such as light rail vehicles, trolley coaches, and mine vehicles that use similar components. Vehicles most similar to the transporter requirements are those employed in mines.

Riverside Cement Company, California

In 1956, the Riverside Cement Company converted their fleet of 30-ton end-dump trucks to electric drive. The conversion included an overhead dc contact wire, trolley poles, a 350-hp traction motor, and controls. The system provided reliable operation for 15 yr before the trucks were retired from service.

Fox Mine, Manitoba

The Fox Mine currently has a test track using a Jarvis-Clark 26-ton-capacity truck that has been converted to all-electric operation. The traction motor is a 200-kW General Electric dc motor. The overhead trolley system is a three-phase, four-wire system. The current collector consists of a trolley that rides on the bus and connects to the vehicle with a trailing cable.

Palabora Mine, South Africa

In 1981, the Palabora Mine in South Africa instituted a program to provide electric power assist to their 170-ton haul trucks. The trucks are diesel-powered, but the electric design provides full-power assist on all grades. The power is provided by an overhead 1200-V dc contact wire system and is brought on board the vehicle by two pantographs. The traction motors are General Electric type 776 motorized wheels rated at 1000 hp each. The overhead wire system was supplied by Ohio Brass and consists of two parallel contact wires for each pole.

Kiruna Electric, Sweden

In 1984, Kiruna Truck, ASEA, and LKAB Iron Ore Company (all of Sweden) developed a prototype for an all-electric mine vehicle. The vehicle has a total gross weight of 94 tons and is powered by two 600-V dc, 230-kW, traction motors manufactured by ASEA. The power is delivered to the vehicle at 1000 V via a three-wire, three-phase overhead bus system. The power is converted with on-board controls to variable dc to be used by the motors. The trolley arm can connect and disconnect from the overhead bus automatically while the vehicle is in motion, and batteries are provided for off-line operation.

7.0 CONCLUSIONS AND RECOMMENDATIONS

7.1 CONCLUSIONS

Our analysis shows that total electrification of the waste transporter is both feasible and practical. The power demand requirements for individual transporters, a multiple transporter system, and the electrical supply system are well within the limits of current design, use, and construction practices.

Currently, the most feasible means of electrification is one or two dc traction motors driving two or four wheels, respectively. The total motor rating is estimated to be 400 kW. The dc traction motors would permit electrical dynamic braking to enhance the hydraulic/mechanical braking system, an added safety feature for long-slope haulage applications. Controls could be either switched resistor or chopper technology from dc trolley to DC on-board service or a thyristor-controlled ac trolley to dc on-board service.

The most effective way to transmit motive power would be by an overhead contact wire or bus system supplied by wayside substations, which would be located at intervals along the travel route. Trolley poles connect the vehicle to the overhead system and would have means for both manual and automatic connect/disconnect.

Transporters would be equipped with a battery system for limited off-line operation needed for tight radius turns, emergency situations, access to repair shops, and canister emplacement.

The alternatives for waste transporter design are (1) existing diesel-powered trucks that may be mechanically modified, and (2) diesel-electrical units that must be developed and extensively modified.

Although the outcome of a comparison between diesel trucks/diesel-electrical trucks and an all-electric unit to some degree depends on the relationship between the cost of diesel fuel and the cost of electricity, some cost savings and advantages apply to all situations, such as:

- Investment per canister hauled for the all-electric truck is lower due to higher possible ramp speeds, requiring fewer vehicles in the fleet.

- Installation costs of the trolley line and stationary electrical equipment are normally lower than the installation of a ventilation system for the diesel units.

- Operating costs are 50 to 60% of diesel truck haulage when considering the following cost items:

  - Energy
  - Ventilation
  - Manpower.

- Tire costs are considerably lower than for diesel trucks due to the good speed regulation and less wheel spin associated with electric vehicles.

- General maintenance costs are lower due to soft speed regulation (less torque and system shocks) and the fact that the vehicle is all-electric with fewer moving parts.

- The noise levels of an all-electric unit are much lower than a diesel or diesel-electric counterpart.

7.2 RECOMMENDATIONS

Only a limited number of all-electric vehicles currently in use match the general characteristics of the waste transporter. There are, however, a number of vehicles, such as light rail vehicles, trolley coaches, and mine vehicles that use similar components (see Section 6). The vehicles most similar to the transporter requirements are those employed in mine applications.

The Kiruna truck is recommended as the best available "off-the-shelf" unit. This truck would require minor mechanical modifications to the basic chassis for use as a

transporter. Figure 7-1 illustrates a simplified electrical circuit used in the Kiruna truck. This basic unit has a low tare weight (35 T), high payload (55 T), is very robust, and meets all of the requirements established for an all-electric unit. The details of the system, including the wayside station design, overhead distribution design, current collection design, drive motor selection, and vehicle control selection, would be determined during future engineering phases of the project, because these details are dependent upon the vehicle design, final repository layout, and operational criteria.

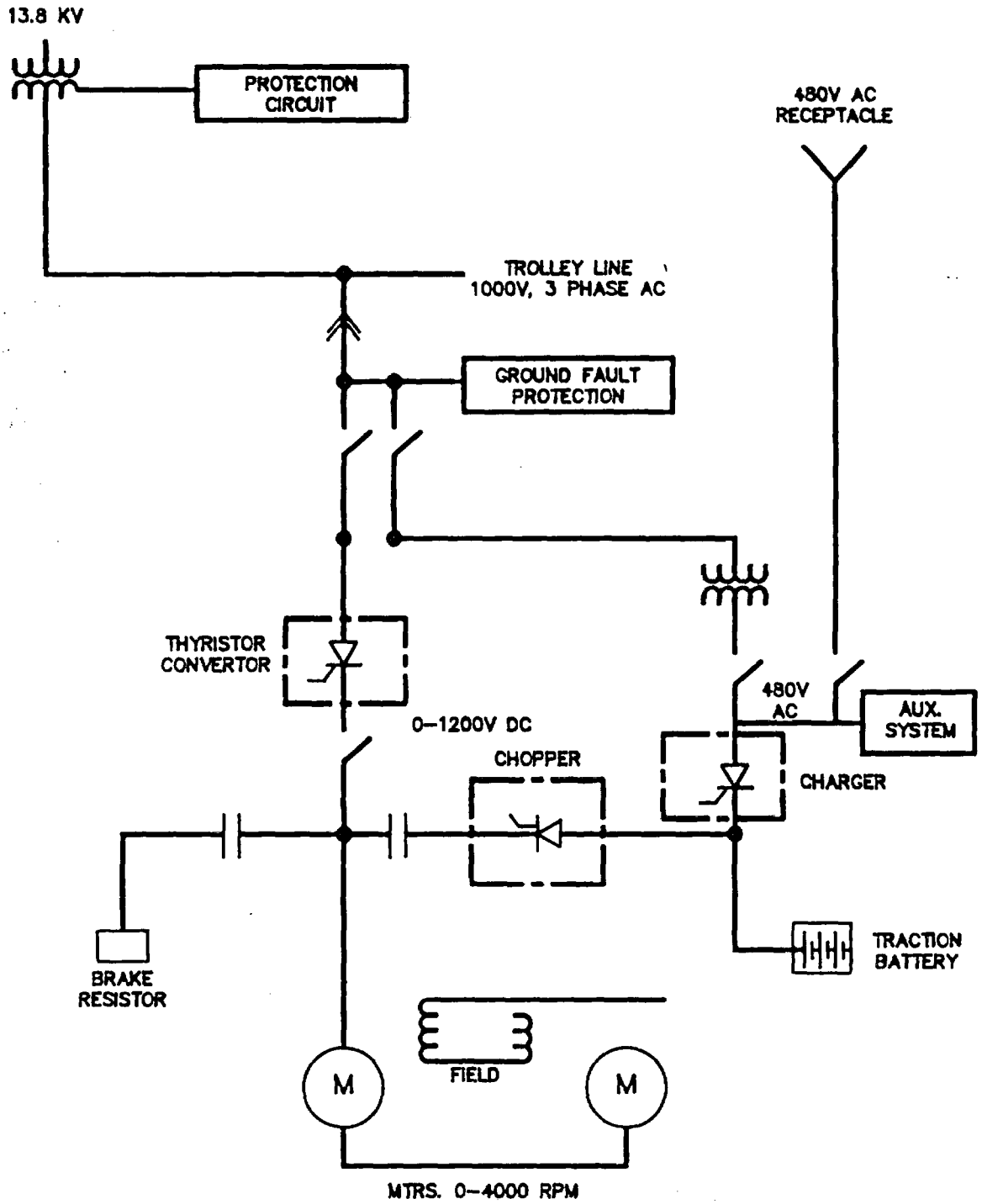

FIGURE 7–1. KIRUNA ELECTRIC TRUCK, SIMPLIFIED ELECTRICAL CIRCUIT

8.0 REFERENCES

(1) I. H. Shames, "Engineering Mechanics," Vol. I, 2nd Edition, in Statics, Prentice Hall, Inc., 1966, Ch. 7, pp. 176-177 and 194-196.

(2) M. G. Bassin and S. M. Brodsky, Statics and Strength of Materials, McGraw-Hill Book Company, Inc., 1960, Ch. 6, pp. 100-103.

(3) "Motor and Generator Application Data," General Electric Company, February, 1957, Ch. D and E.

(4) "DC Motor Application Data Catalog," Reliance Electric Company, July, 1983, pp. c-12 and c-72.

(5) "Dynamic Braking for Brush-Type Motors and Induction Motors," Machine Design Magazine, May 31, 1984, pp. 66, 68-69.

DISTRIBUTION LIST

B. C. Rusche (RW-1)
Director
Office of Civilian Radioactive
Waste Management
U.S. Department of Energy
Forrestal Building
Washington, DC 20585

T. P. Longo (RW-25)
Program Management Division
Office of Geologic Repositories
U.S. Department of Energy
Forrestal Building
Washington, DC 20585

Ralph Stein (RW-23)
Office of Civilian Radioactive
Waste Management
U.S. Department of Energy
Forrestal Building
Washington, DC 20585

Cy Klingsberg (RW-24)
Geosciences and Technology Division
Office of Geologic Repositories
U.S. Department of Energy
Forrestal Building
Washington, DC 20585

J. J. Fiore, (RW-22)
Office of Civilian Radioactive
Waste Management
U.S. Department of Energy
Forrestal Building
Washington, DC 20585

B. G. Gale (RW-22)
Office of Civilian Radioactive
Waste Management
U.S. Department of Energy
Forrestal Building
Washington, DC 20585

M. W. Frei (RW-23)
Office of Civilian Radioactive
Waste Management
U.S. Department of Energy
Forrestal Building
Washington, DC 20585

R. J. Blaney (RW-22)
Program Management Division
Office of Geologic Repositories
U.S. Department of Energy
Forrestal Building
Washington, DC 20585

E. S. Burton (RW-25)
Siting Division
Office of Geologic Repositories
U.S. Department of Energy
Forrestal Building
Washington, DC 20585

R. W. Gale (RW-40)
Office of Civilian Radioactive
Waste Management
U.S. Department of Energy
Forrestal Building
Washington, DC 20585

C. R. Cooley (RW-24)
Geosciences & Technology Division
Office of Geologic Repositories
U.S. Department of Energy
Forrestal Building
Washington, DC 20585

J. E. Shaheen (RW-44)
Outreach Programs
Office of Policy, Integration and
Outreach
U.S. Department of Energy
Forrestal Building
Washington, DC 20555

V. J. Cassella (RW-22)
Office of Civilian Radioactive
Waste Management
U.S. Department of Energy
Forrestal Building
Washington, DC 20585

J. O. Neff, Manager
Salt Repository Project Office
U.S. Department of Energy
Forrestal Building
Washington, DC 20585

D. C. Newton (RW-23)
Engineering & Licensing Division
Office of Geologic Repositories
U.S. Department of Energy
Forrestal Building
Washington, DC 20585

O. L. Olson, Manager
Basalt Waste Isolation Project Office
Richland Operations Office
U.S. Department of Energy
Post Office Box 550
Richland, WA 99352

D. L. Vieth, Director (4)
Waste Management Project Office
U.S. Department of Energy
Post Office Box 14100
Las Vegas, NV 89114

D. F. Miller, Director
Office of Public Affairs
U.S. Department of Energy
Post Office Box 14100
Las Vegas, NV 89114

P. M. Bodin (12)
Office of Public Affairs
U.S. Department of Energy
Post Office Box 14100
Las Vegas, NV 89114

B. W. Church, Director
Health Physics Division
U.S. Department of Energy
Post Office Box 14100
Las Vegas, NV 89114

Chief, Repository Projects Branch
Division of Waste Management
U.S. Nuclear Regulatory Commission
Washington, DC 20555

Document Control Center
Division of Waste Management
U.S. Nuclear Regulatory Commission
Washington, DC 20555

S. A. Mann, Manager
Crystalline Rock Project Office
U.S. Department of Energy
9800 South Cass Avenue
Argonne, IL 60439

K. Street, Jr.
Lawrence Livermore National
Laboratory
Post Office Box 808
Mail Stop L-209
Livermore, CA 94550

L. D. Ramspott (3)
Technical Project Officer for NNWSI
Lawrence Livermore National
Laboratory
Post Office Box 808
Mail Stop L-204
Livermore, CA 94550

W. J. Purcell (RW-20)
Associate Director
Office of Civilian Radioactive
Waste Management
U.S. Department of Energy
Forrestal Building
Washington, DC 20585

D. T. Oakley (4)
Technical Project Officer for NNWSI
Los Alamos National Laboratory
Post Office Box 1663
Mail Stop F-619
Los Almos, NM 87545

W. W. Dudley, Jr. (3)
Technical Project Officer for NNWSI
U.S. Geological Survey
Post Office Box 25046
418 Federal Center
Denver, CO 80225

NTS Section Leader
Repository Project Branch
Division of Waste Management
U.S. Nuclear Regulatory Commission
Washington, DC 20555

V. M. Glanzman
U.S. Geological Survey
Post Office Box 25046
913 Federal Center
Denver, CO 80225

P. T. Prestholt
NRC Site Representative
1050 East Flamingo Road
Suite 319
Las Vegas, NV 89109

M. E. Spaeth
Technical Project Officer for NNWSI
Science Applications
International Corporation
Suite 407
101 Convention Center Drive
Las Vegas, NV 89109

SAIC-T&MSS Library (2)
Science Applications
International Corporation
Suite 407
101 Convention Center Drive
Las Vegas, NV 89109

W. S. Twenhofel, Consultant
Science Applications
International Corp.
820 Estes Street
Lakewood, CO 89215

A. E. Gurrola
Vice President and General Manager
Energy Support Division
Holmes & Narver, Inc.
Mail Stop 580
Post Office Box 14340
Las Vegas, NV 89114

J. A. Cross, Manager
Las Vegas Branch
Fenix & Scisson, Inc.
Mail Stop 514
Post Office Box 14308
Las Vegas, NV 89114

Neal Duncan (RW-44)
Office of Policy, Integration, and
Outreach
U.S. Department of Energy
Forrestal Building
Washington, DC 20585

J. S. Wright
Technical Project Officer for NNWSI
Westinghouse Electric Corporation
Waste Technology Services Division
Nevada Operations
Post Office Box 708
Mail Stop 703
Mercury, NV 89023

ONWI Library
Battelle Columbus Laboratory
Office of Nuclear Waste Isolation
505 King Avenue
Columbus, OH 43201

W. M. Hewitt, Program Manager
Roy F. Weston, Inc.
955 L'Enfant Plaza, Southwest, Suite 800
Washington, DC 20024

H. D. Cunningham
General Manager
Reynolds Electrical & Engineering, Co.,
Inc.
Post Office Box 14400
Mail Stop 555
Las Vegas, NV 89114

T. Hay, Executive Assistant
Office of the Governor
State of Nevada
Capitol Complex
Carson City, NV 89710

R. R. Loux, Jr., Director (3)
Nevada Agency for Nuclear Projects
Nuclear Waste Project Office
State of Nevada
Capitol Complex
Carson City, NV 89710

C. H. Jonhson, Technical
Program Manager
Nevada Agency for Nuclear Projects
Nuclear Waste Project Office
State of Nevada
Capitol Complex
Carson City, NV 89710

John Fordham
Desert Research Institute
Water Resources Center
Post Office Box 60220
Reno, NV 89506

Department of Comprehensive Planning
Clark County
225 Bridger Avenue, 7th Floor
Las Vegas, NV 89155

Lincoln County Commission
Lincoln County
Post Office Box 90
Pioche, NV 89043

Community Planning and Development
City of North Las Vegas
Post Office Box 4086
North Las Vegas, NV 89030

City Manager
City of Henderson
Henderson, NV 89015

N. A. Norman
Project Manager
Bechtel National Inc.
P.O. Box 3965
San Francisco, CA 94119

Flo Butler
Los Alamos Technical Associates
1650 Trinity Drive
Los Alamos, New Mexco 87544

Timothy G. Barbour
Science Applications International Corporation
1626 Cole Boulevard, Suite 270
Golden, CO 80401

Dr. Martin Mifflin
Desert Research Institute
Water Resources Center
Suite 1
2505 Chandler Avenue
Las Vegas, NV 89120

Planning Department
Nye County
Post Office Box 153
Tonopah, NV 89049

Economic Development Department
City of Las Vegas
400 East Stewart Avenue
Las Vegas, NV 89101

Director of Community Planning
City of Boulder City
Post Office Box 367
Boulder City, NV 89005

Commission of the European Communitites
200 Rue de la Loi
B-1049 Brussels
BELGIUM

Technical Information Center
Roy F. Weston, Inc.
955 L'Enfant Plaza, Southwest, Suite 800
Washington, DC 20024

R. Harig
Parsons Brinckerhoff Quade & Douglas, Inc.
1625 Van Ness Avenue
San Francisco, CA 94109-3678

Dr. Madan M. Singh, President
Engineers International, Inc.
98 East Naperville Road
Westmont, IL 60559-1595

E. P. Binnall
Field Systems Group Leader
Building 50B/4235
Lawrence Berkeley Laboratory
Berkeley, CA 94720

T. H. Isaacs (RW-22)
Office of Civilian Radioactive
Waste Managment
U.S. Department of Energy
Forrestal Building
Washington, DC 20585

D. H. Alexander (RW-23)
Office of Civilian Radioactive
Waste Managment
U.S. Department of Energy
Forrestal Building
Washington, DC 20585

B. J. King, Librarian (2)
Basalt Waste Isolation Project
Library
Rockwell Hanford Operations
Post Office Box 800
Richland, WA 99352

David K. Parrish
RE/SPEC Inc.
3815 Eubank, N.E.
Albuquerque, NM 87191

D. L. Fraser, General Manager
Reynolds Electrical & Engineering
Company, Inc.
Mail Stop 555
Post Office Box 14400
Las Vegas, NV 89114-4400

Gerald Parker (RW-25)
Office of Geologic Repositories
U.S. Department of Energy
Forrestal Building
Washington, DC 20585

Roger Hart
Itasca Consulting Group, Inc.
P.O. Box 14806
Minneapolis, Minnesota 55414

J. P. Knight (RW-24)
Office of Civilian Radioactive
Waste Managment
U.S. Department of Energy
Forrestal Building
Washington, DC 20585

Allen Jelacic (RW-23)
Office of Civilian Radioactive
Waste Managment
U.S. Department of Energy
Forrestal Building
Washington, DC 20585

J. R. Rollo
Deputy Assistant Director for
Engineering Geology
U.S. Geological Survey
106 National Center
12201 Sunrise Valley Drive
Reston, VA 22092

R. Lindsay Mundell
United States Bureau of Mines
P.O. Box 25086
Building 20
Denver Federal Center
Denver, Colorado 802254

Vincent Gong
Technical Project Officer for NNWSI
Reynolds Electrical & Engineering
Company, Inc.
Mail Stop 615
Post Office Box 14400
Las Vegas, NV 89114-4400

Christopher M. St. John
J. F. T. Agapito Associates, Inc.
27520 Hawthorne Blvd., Suite 137
Rolling Hills Estates, CA 90274

J. P. Pedalino
Technical Project Officer for NNWSI
Holmes & Narver, Inc.
Mail Stop 605
Post Office Box 14340
Las Vegas, NV 89114

S. D. Murphy
Technical Project Officer for NNWSI
Fenix & Scisson, Inc.
Mail Stop 940
Post Office Box 15408
Las Vegas, NV 89114

Eric Anderson
Mountain West Research-Southwest, Inc.
398 South Mill Avenue, Suite 300
Tempe, AZ 85281

S. H. Kale (RW-20)
Associate Director
Office of Civilian Radioactive
Waste Management
U.S. Department of Energy
Forrestal Building
Washington, DC 20585

Judy Foremaster (5)
City of Caliente
Post Office Box 158
Caliente, NV 89008

6300	R. W. Lynch
6310	T. O. Hunter
6310	60/12422/1.1/Q3
6311	L. W. Scully
6311	C. Mora
6312	F. W. Bingham
6313	T. E. Blejwas
6314	J. R. Tillerson
6315	S. Sinnock
6315	M. J. Eatough
6332	WMT Library (20)
6430	N. R. Ortiz
3141	S. A. Landenberger (5)
3151	W. L. Garner (3)
8024	P. W. Dean
3154-3	C. H. Dalin (28) for DOE/OSTI
6311	V. Hinkel (2)