PVP-Vol. 467, Transportation, Storage, and Disposal
of Radioactive Materials — 2003
Copyright © 2003 by ASME
PVP2003-2147

ANALYSIS OF THE IMPACT OF A TUNNEL FIRE ENVIRONMENT ON A SPENT NUCLEAR FUEL TRANSPORTATION CASK

Christopher S. Bajwa
Spent Fuel Project Office
U.S. Nuclear Regulatory Commission
Washington, D.C.
(301) 415-1237, csb1@nrc.gov

ABSTRACT

On July 18, 2001, a train carrying hazardous materials derailed and caught fire in the Howard Street railroad tunnel in Baltimore, Maryland. Due to this accident, questions were raised about the performance of spent nuclear fuel transportation casks under severe fire conditions, similar to those experienced in the Baltimore tunnel fire.

The U.S. Nuclear Regulatory Commission (NRC) evaluates the performance of spent fuel transportation casks under accident conditions. Title 10 of the Code of Federal Regulations Part 71 section 73(c)(4), (10 CFR 71.73(c)(4)) requires that transportation packages used to ship radioactive material must be designed to resist an engulfing fire of a 30 minute duration and prevent release of radioactive material to the environment.

The staff of the NRC, in cooperation with the National Transportation Safety Board, the National Institute of Standards and Technology, Pacific Northwest National Labs and the Center for Nuclear Waste Regulatory Analysis, have undertaken an analysis to determine the thermal conditions present in the Howard Street tunnel fire, as well as analyze the effects that such a fire would have on a spent fuel transportation cask. This paper describes the analytic models used in the assessment and presents a discussion of the results.

INTRODUCTION

Following the July 18, 2001, derailment and fire involving a CSX freight train inside the Howard Street tunnel in Baltimore, Maryland, the staff of the Nuclear Regulatory Commission's Spent Fuel Project Office (SFPO) was tasked with investigating the incident and determining what impact this type of fire event might have on a spent fuel transportation cask.

This paper will discuss the pertinent facts surrounding the Baltimore tunnel fire event; describe the analytic tunnel fire model developed by the National Institute of Standards and Technology (NIST), and the material property analyses performed by the Center for Nuclear Waste Regulatory Analysis (CNWRA) to quantify the thermal conditions that the rail cars experienced during the event. This paper will also describe an analysis performed to assess the performance of a spent fuel transportation cask design when subjected to the thermal conditions experienced in the tunnel, as calculated by NIST and validated by CNWRA. The staff's conclusions regarding the possible radiological consequences of this event will also be presented.

The Howard Street Tunnel Fire Event

The Howard Street tunnel is a single track rail tunnel, 2.7 kilometers (1.65 miles) in length, with an average upward grade of 0.8% from the west portal to the east portal of the tunnel. The tunnel is constructed of concrete and refractory brick, and has a manually activated ventilation system. The tunnel has vertical walls with a cylindrical ceiling measuring approximately 6.7 meters (22 feet) high by 8.2 meters (27 feet) wide, but the dimensions vary slightly along the length of the tunnel.

The train had 60 cars, including both boxcars and tank cars, and was pulled by 3 locomotives. The train was carrying paper products, hydrochloric acid, liquid tripropylene, pulp board and other cargo. As the train traveled through the tunnel 11 of the 60 rail cars derailed. A tank car containing approximately 108,263 liters (28,600 gallons) of liquid tripropylene (see Figure 1) was punctured during the derailment and the leaking tripropylene was ignited. The hole punctured in the tank car was approximately 3.81 centimeters (1.5 inches) in diameter.

The exact duration of the fire is unknown; however, reports from emergency responders indicate that the most severe portion of the fire lasted approximately 3 hours. Approximately 12 hours after the fire started, conditions in the tunnel were such that firefighters were able to enter the tunnel and visually confirm that the tripropylene tank car was no longer burning.

Figure 1. Tripropylene Tank Car

NIST TUNNEL FIRE MODEL

During the event, emergency responders did not take temperature readings of the tunnel walls or anywhere else inside the tunnel. Thus, the precise temperature at which the fire burned was unknown. In order to better predict what the temperatures in the tunnel could have been during the event, fire modeling experts at the National Institute of Standards and Technology (NIST) were contracted to develop a model of the Howard Street tunnel fire using the Fire Dynamics Simulator (FDS) code.

The FDS code is a computational fluid dynamics (CFD) code that models combustion and the flow of hot gasses in fire environments. FDS solves the mass, momentum, and energy equations for a given computational grid, and is also able to construct a visual representation of smoke flow from a given fire.

In order to demonstrate the capability of FDS to properly model a tunnel fire, NIST developed tunnel fire models to validate FDS against data taken from a series of fire experiments conducted by the Federal Highway Administration and Parsons Brinkerhoff, Inc. as part of the Memorial Tunnel Fire Ventilation Test Program.[1] These tests were conducted in an abandoned West Virginia highway tunnel to study tunnel fire response to various tunnel ventilation schemes. The data from these tests were reviewed by NIST, and used to validate the FDS code. NIST modeled both a 20 MW (6.83×10^7 BTU/hr) and a 50 MW (1.71×10^7 BTU/hr) unventilated fire test from the Memorial Tunnel Test Program, and achieved results using FDS that were within 50°C, (100°F) of the recorded data.[2]

The Howard Street Tunnel Fire Model

The Howard Street tunnel model developed by NIST was a full length 3-dimensional (3D) representation of the tunnel that included railcars positioned as they were found following the derailment (see Figure 2). The model simulated the burning of a pool of liquid tripropylene positioned below the approximate location of the puncture hole on the tripropylene tank car. The railcars were all modeled as thin-walled rectangular boxes that were allowed to heat up as the fire progressed.

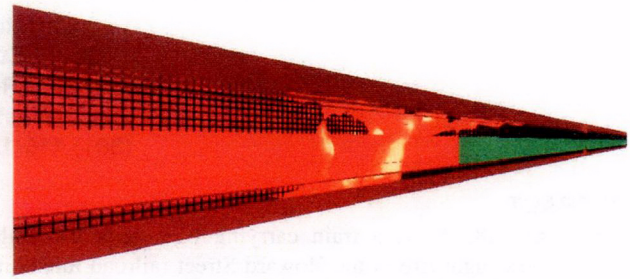

Figure 2. Howard Street Tunnel Fire Model (Image Courtesy of NIST)

Thirty minutes into the simulation, the FDS model indicated that the surface of the tunnel walls, the hot gas layer above the railcars, and the metal skin of the railcars had reached a relatively constant temperature. The simulation was halted at that time.

Temperatures calculated in the FDS model were as high as 1000°C, (1800°F) in the flaming regions of the fire. The model indicated that the hot gas layer above the railcars, within three rail car lengths of the fire, was an average of 500°C, (900°F). Temperatures on the tunnel wall surface were calculated to be 800°C, (1500°F) where the fire directly impinged on the top of the tunnel. The average tunnel ceiling temperature, within a distance of three rail cars from the fire, was 400°C, (750°F).[2] The FDS code allows placement of thermocouples at precise locations within the model.

MATERIALS EXPOSURE ANALYSIS

SFPO staff was given access, through CSX Corporation, to the railcars that were removed from the Howard Street tunnel, following the fire. The staff inspected the railcars along with staff from the Center for Nuclear Waste Regulatory Analysis (CNWRA) who provided expertise in fire modeling, fire testing, and materials analysis. The physical evidence examined was used by the staff to gain further insight into the environment that may have existed in the tunnel during the fire. CNWRA staff analyzed the condition of paint, metal samples removed from box cars, and components removed from the tripropylene tank car during the staff's inspection. In order to estimate the time and temperature of exposure of these samples, several different metallurgical analyses were performed on the material samples collected, including sections of the boxcars exposed to the most severe portion of the fire, and an air brake valve from the tripropylene tanker car. The time/temperature exposures estimated by the CNWRA's analyses were consistent with the conditions predicted by the NIST tunnel fire model.[3]

C01

TRANSPORTATION OF SPENT NUCLEAR FUEL

In recent years, a great deal of focus has been placed on the safe transportation of spent nuclear fuel. The licensing and operation of a long term waste storage facility is a possibility in the foreseeable future. The occurrence of the Baltimore tunnel fire placed a spotlight on a type of accident that could have an effect on the safe shipment of spent nuclear fuel by rail. Current NRC regulations require that spent fuel transportation casks be evaluated for a hypothetical accident condition that includes a fully engulfing fire with an average flame temperature of 800°C, (1475°F) for a period of 30 minutes.[4]

In order for transportation cask designs to be certified by the NRC, cask designs must either be subjected to an open pool fire test or analyzed for a fire event meeting the aforementioned criteria. Cask designs must maintain shielding and criticality control functions throughout a sequence of hypothetical accident conditions, which include a 9 meter (30 foot) drop test and a pin puncture test, prior to the fire event.

Spent Fuel Transportation Cask

The staff investigated what impact the Howard Street tunnel fire might have on an NRC approved spent fuel transportation cask design. The design chosen for this evaluation was the HOLTEC HI-STAR 100 transportation cask. This design utilizes a welded multi-purpose canister (MPC), to hold spent fuel. The MPC has an integral fuel basket that accommodates 24 spent Pressurized Water Reactor (PWR) fuel assemblies. The MPC, after it has been loaded and seal welded, is placed into the transportation cask (or overpack) for shipment. A diagram of the HI-Star 100 cask system (MPC and overpack) is provided in Figure 3. The outer shell of the cask is fabricated of 0.635 centimeter (0.25 inch) thick carbon steel. The next layer is a 11.43 centimeter (4.5 inch) thick polymeric neutron shield, strengthened by a network of stainless steel stiffeners. The gamma shield is comprised of 6 layers of carbon steel plates a total of 16.51 centimeters (6.5 inches) thick. The stainless steel cask inner shell is 6.35 centimeters (2.5 inches) thick.

Impact limiters, fabricated from aluminum honeycomb material with a stainless steel skin, are installed on the ends of the cask immediately prior to shipping. The impact limiters serve two functions: to prevent damage to the cask, its closure lid, MPC, fuel basket, and contents in the case of a cask drop accident and to provide insulation in the case of a fire exposure. Figure 4 shows a model of this cask design with impact limiters installed secured to a transportation railcar.

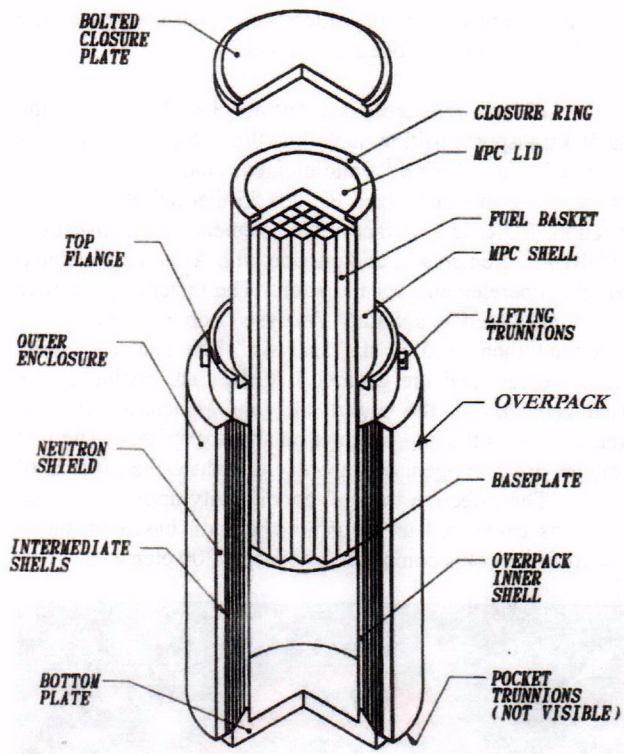

Figure 3. HOLTEC HI-STAR 100 Spent Fuel Cask

Figure 4. Spent Fuel Transportation Cask on Railcar (Image Courtesy of HOLTEC International)

Description of Analysis Approach and Cask Model

The staff analysis of the transportation cask utilized both temperature and flow data from the NIST Howard Street tunnel fire model. The data derived from the NIST model was used to

C02

develop boundary conditions which were then applied to the cask analysis model developed by the staff.

A two dimensional cross section model of the cask in the horizontal transport position, including the transport cradle, was developed in the ANSYS® finite element analysis code.[5] (See Figure 5.) The model utilized PLANE55 thermal elements for conduction, SURF151 surface effect elements for convection, and SURF151 elements in conjunction with AUX-12 generated Matrix 50 superelements for radiation. The material properties from the cask vendor's Safety Analysis Report (SAR) were verified and then used in the analysis.[6] The analysis model explicitly represented the geometry of the cask, including the internal geometry of the basket, all gaps associated with the basket, as well as the integral neutron absorber plates. The fuel assemblies are homogenized in order to reduce the number of elements. The effective thermal conductivity applied to these regions was calculated utilizing a correlation based on data.[7] The analysis model is comprised of over 28,300 elements.

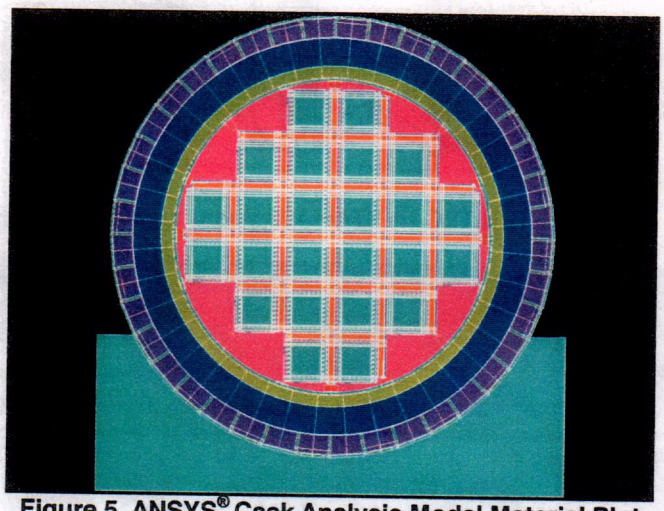

Figure 5. ANSYS® Cask Analysis Model Material Plot

ANALYSIS OF SPENT FUEL TRANSPORTATION CASK

Pre-Fire Boundary Conditions

The normal conditions for transport described in 10 CFR 71.71 were used as a starting point for the analysis. The cask was subjected to an ambient temperature of 38°C, (100°F), with solar insolation accounted for as well. For pre-fire conditions, the surface of the cask was given an emissivity value of 0.85, based on the emissivity value for a painted cask surface. Radiation is modeled using surface effect elements (SURF151). Convection from the surface of the cask is modeled with surface effect elements. The convective heat transfer coefficient applied was calculated, and is equivalent to natural buoyant convection.

To model the decay heat of the fuel, heat generation equivalent to a decay heat load of 20kW (68,290 BTU/hour) was applied. Radial conduction was modeled through all components of the cask, including the fuel region. The model also includes radiation between all gaps present in the model. The fuel region model accounts for radiation and convection in the formation of an effective thermal conductivity value.

A steady state normal condition temperature distribution for the cask was obtained for the model. This temperature distribution was verified against the results reported by the cask vendor, and was found to be in good agreement with those results. A normal condition temperatures plot for the cask is provided. (See Figure 6.)

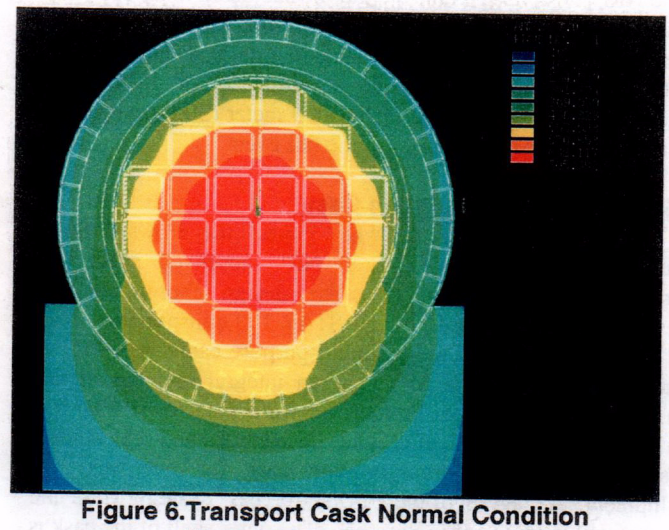

Figure 6.Transport Cask Normal Condition Temperature Distribution

Tunnel Fire Boundary Conditions

The staff completed two separate evaluations of cask response to the tunnel fire environment as predicted by the NIST model. Both evaluations had the cask oriented horizontally with one end of the cask facing the fire source. The first evaluation located the center of the cask 20 meters (65.6 feet) from the fire source, and the second evaluation placed the center of the cask 5 meters (16.4 feet) (essentially adjacent to) the fire source. The first evaluation was based on Department of Transportation regulations that require railcars carrying radioactive materials to be separated by at least one railcar (a buffer car) from other cars carrying hazardous materials or flammable liquids.[8] The second evaluation is considered a bounding case, given that a spent fuel transportation cask, had one been involved in the Howard Street tunnel derailment and fire, would not have been adjacent to the fuel source.

A convective boundary condition was calculated for the cask model utilizing flow data from the NIST model, which

C03

predicts the flow field present in the tunnel due to the fire. The convective boundary conditions are forced convection correlations that are applied to the cask model in three "zones." The upper third of the cask was exposed to the maximum temperature and flow that existed in the upper portion of the tunnel; the middle third of the cask was exposed to the maximum temperatures and flow that existed along the side of the tunnel; and the bottom third of the cask, including the shipping cradle, was exposed to the maximum temperature and flow conditions along the lower elevations of the tunnel.

The fire source was conservatively modeled as a "wall of flame" with the same dimensions as the tunnel cross section, and given a temperature of 850°C, (1562°F), based on the NIST calculations. Radiation from the fire source to the cask body was captured by radiation view factors that were calculated for the cask, taking into account that the impact limiters are in place at the beginning of the fire (the impact limiter skins are assumed to remain in place and retain their general shape for the entire fire duration). The emissivity of the cask was set to 0.9 for the fire duration. For the 20 meter case, the radiation view factor was very small and therefore was neglected. Tunnel wall surface temperatures were also taken from the NIST calculations, and radiation from the tunnel walls (which have the most direct view of the cask body) was accounted for in both evaluations.

The maximum temperatures and flow fields predicted by the NIST fire model for the 20 meter and 5 meter distances were used to define the fire exposure for the first 30 minutes of the analysis. The maximum temperatures reported at the end of the 30 minute NIST simulation were then used for the remainder of the 150 hour analysis, even though temperatures would most likely have continued to decrease as the amount of oxygen available for combustion decreased. The analysis determined how the cask and its contents would heat up in response to this exposure.

ANALYSIS RESULTS

Temperature Results

For the 20-meter (65.6-feet) evaluation, the analysis indicated that the spent fuel cladding, which is the primary boundary to release of fission products, would have exceeded 570°C, (1058°F) 116 hours into the fire exposure. This temperature is the currently accepted short term fuel temperature limit for Zircalloy clad spent nuclear fuel.[9] This temperature limit is based on creep experiments done on two fuel cladding test samples held at, 570°C, (1058°F), which remained undamaged (i.e., there was no significant observable damage) for times up to 30 and 71 days. The temperature at which Zircalloy fuel rods actually fail by burst rupture is approximately 750°C, (1382°F).[10]

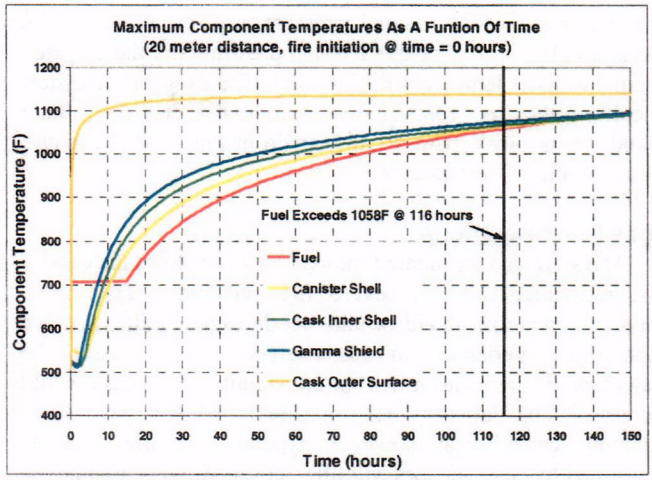

Figure 7. 20 Meter Component Temperature Plot

For the 5-meter scenario, the fuel cladding temperature limit would have been exceeded at 37 hours into the fire exposure. Figures 7 and 8 provide component temperature plots of the results for the 20 meter and 5 meter evaluations, respectively. The temperatures plotted in these figures are the maximum component temperatures calculated for each time step.

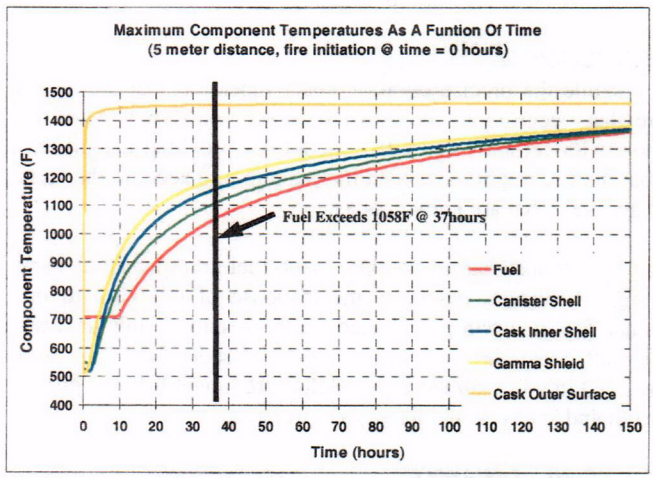

Figure 8. 5 Meter Component Temperature Plot

While the primary boundary preventing release of fission gasses contained in the spent fuel rods is the fuel cladding, the release of these gasses to the environment cannot occur unless the MPC is breached. The vendor for this particular cask design does not take credit for the MPC as a containment boundary, even though it is a seal welded pressure vessel designed to American Society of Mechanical Engineers Boiler and Pressure Vessel Code, Section III, Subsection NB.[11] The MPC has an internal pressure limit for accident conditions of 868 kPa (125 psig). Pressure and stress calculations were completed for the two fire exposures previously described.

004

The maximum MPC internal pressure was calculated to be 798 kPa (116 psig). For this internal pressure and the elevated internal canister temperatures due to the fire exposure, the staff calculated that the canister would remain intact (i.e., there would be no leak path to the environment) for the entire duration of this fire exposure.

Dose Considerations

The staff also considered radioactive doses from the cask to first responders after a severe fire accident. The cask's polymeric neutron shield would be damaged under the fire conditions experienced in this analysis. As a result, the magnitude of the neutron field in the vicinity of the cask would increase. The damaged neutron shield will still have some shielding capabilities; however, typical shielding analyses performed by cask vendors will often conservatively assume the neutron shield is completely removed in the hypothetical fire accident and then calculate the doses associated with this condition. The SAR for this particular cask design demonstrated that even without the neutron shield material in place, dose rates in the vicinity of the cask, following the hypothetical accident condition fire, would fall within the limits prescribed in 10 CFR 71.51.[6] Therefore, a complete loss of the neutron shield, while being a highly improbable event, would not pose a risk to public health beyond what is currently allowed by NRC regulations.

CONCLUSION

While the precise duration and temperatures of the actual fire that occurred in the Howard Street tunnel will never be know with certainty, the NIST model has provided insight into what the fire might have been like, taking into account the facts of the event that are known today.

The robust nature of this spent fuel transportation cask design is evident, based on the response of this cask to the tunnel fire environment. Based on the results of this analysis the staff concludes that, had this type of spent fuel cask been involved in a fire similar to the Baltimore tunnel fire, the public health and safety would have been protected.

ACKNOWLEDGMENTS

I would like to acknowledge Mr. Jay Kivowitz of the National Transportation Safety Board, Mr. Harold Adkins and Dr. Brian Koeppel of the Pacific Northwest National Labs, as well as Dr. Kevin McGrattan of the National Institute of Standards and Technology for their assistance in this investigation.

REFERENCES

[1] Bechtel/Parsons Brinkerhoff, Inc., *Memorial Tunnel Fire Ventilation Test Program, Comprehensive Test Report*, Prepared for Massachusetts Highway Department and Federal Highway Administration, November 1995.

[2] McGrattan K. B., Hammins, A., National Institute of Standards and Technology, *Numerical Simulation of the Howard Street Tunnel Fire, Baltimore, Maryland, July 2001*, NUREG/CR-6793, February 2003.

[3] Garabedian, A.S., Dunn, D.S., Chowdhury A.H., Center for Nuclear Waste Regulatory Analysis, *Analysis of Rail Car Components Exposed to a Tunnel Fire Environment*, NUREG/CR-6799, March 2003.

[4] Title 10, Code of Federal Regulations, Part 71, *Packaging and Transportation of Radioactive Material*, Jan. 1, 2003, United States Government Printing Office, Washington, D.C.

[5] ANSYS, Inc., "ANSYS Users Guide for Revision 7.0," ANSYS, Inc., Canonsburg, PA, USA. 2002.

[6] NRC Docket Number 72-1008, *Final Safety Analysis Report for Holtec International Storage Transport and Repository Cask System* (HI-STAR 100 Cask System), Holtec Report HI-210610, Volumes I and II, March 30, 2001.

[7] Bahney, R.H. III, Lotz, T.L., *Spent Nuclear Fuel Effective Thermal Conductivity Report*, TRW Environmental Safety Systems, Inc. Prepared for U.S. Department of Energy, BBA000000-01717-5705-00010 Rev. 00, July, 1996.

[8] Title 49, Code of Federal Regulations, Subchapter C, *Hazardous Materials Regulations*, Oct. 1, 2002, United States Government Printing Office, Washington, D.C.

[9] Johnson, A.B., Gilbert, E.R., *Technical Basis for Storage of Zircalloy-Clad Spent Fuel in Inert Gases*, Pacific Northwest Laboratory, PNL-4835, September 1983.

[10] J.L. Sprung, et. Al., Sandia National Laboratories, *Reexamination of Spent Fuel Shipment Risk Estimates*, NUREG/CR-6672, March 2000

[11] ASME Boiler and Pressure Vessel Code, Section III, Subsection NB, American Society of Mechanical Engineers, 1995.