SANDIA REPORT

SAND86—1571 • UC—70
Unlimited Release
Printed May 1987

Nevada Nuclear Waste Storage Investigations Project

Effect of Drift Ventilation on Repository Hydrology and Resulting Solute Transport Implications

Polly L. Hopkins, Roger R. Eaton, Scott Sinnock

Prepared by
Sandia National Laboratories
Albuquerque, New Mexico 87185 and Livermore, California 94550
for the United States Department of Energy
under Contract DE-AC04-76DP00789

HYDROLOGY DOCUMENT NUMBER 122

SF2900Q(8-81)

"Prepared by Nevada Nuclear Waste Storage Investigations (NNWSI) Project participants as part of the Civilian Radioactive Waste Management Program (CRWM). The NNWSI Project is managed by the Waste Management Project Office (WMPO) of the U. S. Department of Energy, Nevada Operations Office (DOE/NV). NNWSI Project work is sponsored by the Office of Geologic Repositories (OGR) of the DOE Office of Civilian Radioactive Waste Management (OCRWM)."

Issued by Sandia National Laboratories, operated for the United States Department of Energy by Sandia Corporation.

NOTICE: This report was prepared as an account of work sponsored by an agency of the United States Government. Neither the United States Government nor any agency thereof, nor any of their employees, nor any of their contractors, subcontractors, or their employees, makes any warranty, express or implied, or assumes any legal liability or responsibility for the accuracy, completeness, or usefulness of any information, apparatus, product, or process disclosed, or represents that its use would not infringe privately owned rights. Reference herein to any specific commercial product, process, or service by trade name, trademark, manufacturer, or otherwise, does not necessarily constitute or imply its endorsement, recommendation, or favoring by the United States Government, any agency thereof or any of their contractors or subcontractors. The views and opinions expressed herein do not necessarily state or reflect those of the United States Government, any agency thereof or any of their contractors or subcontractors.

Printed in the United States of America
Available from
National Technical Information Service
U.S. Department of Commerce
5285 Port Royal Road
Springfield, VA 22161

NTIS price codes
Printed copy: A03
Microfiche copy: A01

Distribution
UC-70

SAND86-1571
Unlimited Release

Effect of Drift Ventilation on Repository Hydrology and Resulting Solute Transport Implications

Polly L. Hopkins
Roger R. Eaton
Fluid Mechanics and Heat Transfer Division I

Scott Sinnock
Geoscience Analysis Division

Sandia National Laboratories
Albuquerque, NM 87185

Abstract

Yucca Mountain, which is on and adjacent to the Nevada Test Site, is a proposed location for the underground storage of high-level nuclear waste. The United States Department of Energy is conducting characterization and analysis of this site through the Nevada Nuclear Waste Storage Investigations (NNWSI) Project. To perform required inspections after waste emplacement, the repository drifts may need to be ventilated for some period of time before access is practical. This report describes a computational investigation undertaken to determine whether cyclic ventilation would cause a reduction in the saturation of the drift walls and adjacent host rock. A significant reduction in saturation near buried waste canisters would prevent advective solute transport. The isothermal study of this ventilation process involved one and two-dimensional analyses. The 1-D studies provided insight into the effects of ventilation cycling ratios and cycle periods on the removal of moisture from the drift wall. These studies also suggested that the moisture removed during cyclic ventilation over a long period of time can be reasonably represented by constant ventilation. Under the conditions of a 2-D simulation of constant ventilation for 50 years after drift excavation and subsequent recovery period, the fluid velocity field indicates that advective contaminant transport away from emplacement holes could be prevented for a period of 275 to 420 years. The prescribed boundary conditions were varied and the results showed that a decrease in either the prescribed infiltration rate or the relative humidity of the drift ventilation air would increase the time period of enhanced containment.

Contents

1 Introduction **1**

2 One-dimensional Studies **2**

2.1 Problem Definition 2

2.2 Results 6

2.3 Discussion 11

3 Two-Dimensional Studies **14**

3.1 Problem Definition 14

3.2 Results 14

3.3 Variation of Model Parameters 18

3.4 Discussion 31

4 Conclusion **32**

5 References **33**

A Analytical support **35**

List of Figures

1 Matrix permeability 4

2 Matrix moisture content 5

3 Saturation time history 7

4 Case comparison of cumulative moisture removal 9

5 Case comparison of saturation near the drift wall 10

6 Case comparison of moisture removal rates 12

7 Mass removed with constant and cyclic ventilation 13

8 Proposed vertical emplacement scheme 15

9 Boundary conditions 16

10 Finite element grid, 66 elements 17

11 Fluid velocity vectors and saturation contour at initial steady-state conditions (0.5 mm/yr) 19

12 Fluid velocity vectors and saturation contours after 4.5 months of constant ventilation (0.5 mm/yr) 20

13 Fluid velocity vectors and saturation contours after 50 years of constant ventilation (0.5 mm/yr) 21

14 Fluid velocity vectors and saturation contours 20 years after termination of ventilation (0.5 mm/yr) 22

15 Fluid velocity vectors and saturation contours 150 years after termination of ventilation (0.5 mm/yr) 23

16 Fluid velocity vectors and saturation contours 250 years after termination of ventilation (0.5 mm/yr) 24

17 Fluid velocity vectors and saturation at initial steady-state conditions (0.1 mm/yr) 25

18 Fluid velocity vectors (a) after 11 years at 0.1 mm/yr and (b) after 2 years at 0.5 mm/yr 26

19 Fluid velocity vectors and saturation contours after 50 years of constant ventilation (0.1 mm/yr) 27

20 Fluid velocity vectors (a) after 22 years and (b) after 158 years (0.1 mm/yr) 28

21 Fluid velocity vectors 238 years after termination of ventilation at (a) 0.1 mm/yr and (b) 0.5 mm/yr 29

22 Fluid velocity vectors 450 years after termination of ventilation at (a) 0.1 mm/yr and (b) 0.5 mm/yr 30

1 Introduction

Yucca Mountain, which is on and adjacent to the Nevada Test Site, is a proposed location for the underground storage of high-level nuclear waste. The United States Department of Energy is conducting characterization and analysis of this site through the Nevada Nuclear Waste Storage Investigations (NNWSI) project. A main focus of this project is to evaluate the potential for transport of soluble radionuclides and other contaminants from a repository site to the accessible environment. Understanding the rock saturation levels under various conditions is essential. Gradients in the saturation level drive the water flow through unsaturated rock, and water flow is the principal mechanism for solute transport. Also, the saturation level is a factor in the performance of waste canisters.

Periodic inspections of a repository after waste emplacement is a requirement. To do this, the repository drifts may need to be ventilated for some period of time before access is practical. An investigation into the effects of this cyclic ventilation on the saturation and water velocity fields within the drift walls and adjacent host rock was made. A significant reduction in saturation near a canister would provide a hydraulic barrier to solute transport away from the emplacement holes. The isothermal study of this ventilation process involved two analyses: (1) one-dimensional (1-D) comparison of various cycling conditions and (2) two-dimensional (2-D) simulation of a prolonged ventilation and subsequent recovery period. Sensitivity of the results to the prescribed boundary conditions was then considered. Throughout this report, a cycle is denoted by days of ventilation followed by days of no ventilation with a slash ('/') separating them. A simulation is generally run over a number of these cycles.

The finite element program SAGUARO[1] was developed in response to the needs of the NNWSI project and has been used throughout this study, as well as in many other analyses. SAGUARO solves transient problems of single-phase water and energy transport through partially or fully saturated porous media.

2 One-dimensional Studies

The 1-D calculations were intended to be scoping in nature to determine whether drift ventilation would have an appreciable affect on media saturation in the vicinity of buried waste, and whether the degree of influence was dependent upon the applied cycling scheme. Indications of significant drying would suggest a more detailed 2-D analysis to obtain a better approximation of its temporal and spatial scope. Also, a strong dependence on cycling schemes would warrant defining a nearly optimal, yet reasonable, scheme for drift ventilation.

2.1 Problem Definition

The initial 1-D domain was defined to extend 10 m back into the drift wall. Material properties of the proposed repository level at Yucca Mountain (TSW2 unit of Ortiz et al.)[2] were used and are given in Table 1.

Table 1

Material Property	Value[3]
Porosity	0.11
Hydraulic conductivity	1.9e-11 (m/s)
Residual saturation	0.08
α	0.567e-2 (1/m)
β	1.798

The functional forms of saturation and conductivity described by van Genuchten[4,5] were used and are given by equations (1) through (3).

$$S = (1 - S_r)\left\{\frac{1}{1 + |\alpha\psi|^{\beta}}\right\}^{\lambda} + S_r \tag{1}$$

$$K = K_s\left[1 + |\alpha\psi|^{\beta}\right]^{-(\lambda/2)}\left\{1 - \left[\frac{|\alpha\psi|^{\beta}}{1 + |\alpha\psi|^{\beta}}\right]^{\lambda}\right\}^{2} \tag{2}$$

$$\lambda = 1 - \frac{1}{\beta} \tag{3}$$

where

ψ	$\equiv$	pressure head,
K_s	$\equiv$	saturated hydraulic conductivity,
S_r	$\equiv$	residual saturation,
α, β	$\equiv$	empirical material constants.

Figures 1 and 2 show the material permeability and moisture content as a function of negative pressure head.

The pressures involved in this problem were confined to the region where fractures are assumed to be drained and thus fractures within the material were not modelled. The mean saturation of the TSW2 unit is 0.65 with a standard deviation of 0.20.[6,7] For the 1-D scoping calculations, an initial media saturation of 0.80 and temperature of 25 degrees Celcius were assumed. The boundary conditions at the drift wall vary along the length of the drift as the initially dry air forced into the drift begins to saturate. The matrix saturation at the drift wall was chosen to be 40 percent. This assumption results in a pressure boundary condition during ventilation ('on-time') that yields an air relative humidity at the drift wall of approximately 96 percent and water migration would thus tend to be conservative. The air humidity adjacent to the drift wall is related to the total water potential by an expression reported by Peters *et al.* [3] and given by equation (4). The matrix pore pressure is approximately equal to the total water potential.

$$\Phi = \frac{-RT}{M} ln(\frac{\phi}{100}) \tag{4}$$

where

Φ	$\equiv$	total water potential,
R	$\equiv$	universal gas constant,
T	$\equiv$	Kelvin temperature,
M	$\equiv$	molecular weight of water,
ϕ	$\equiv$	relative humidity (percent).

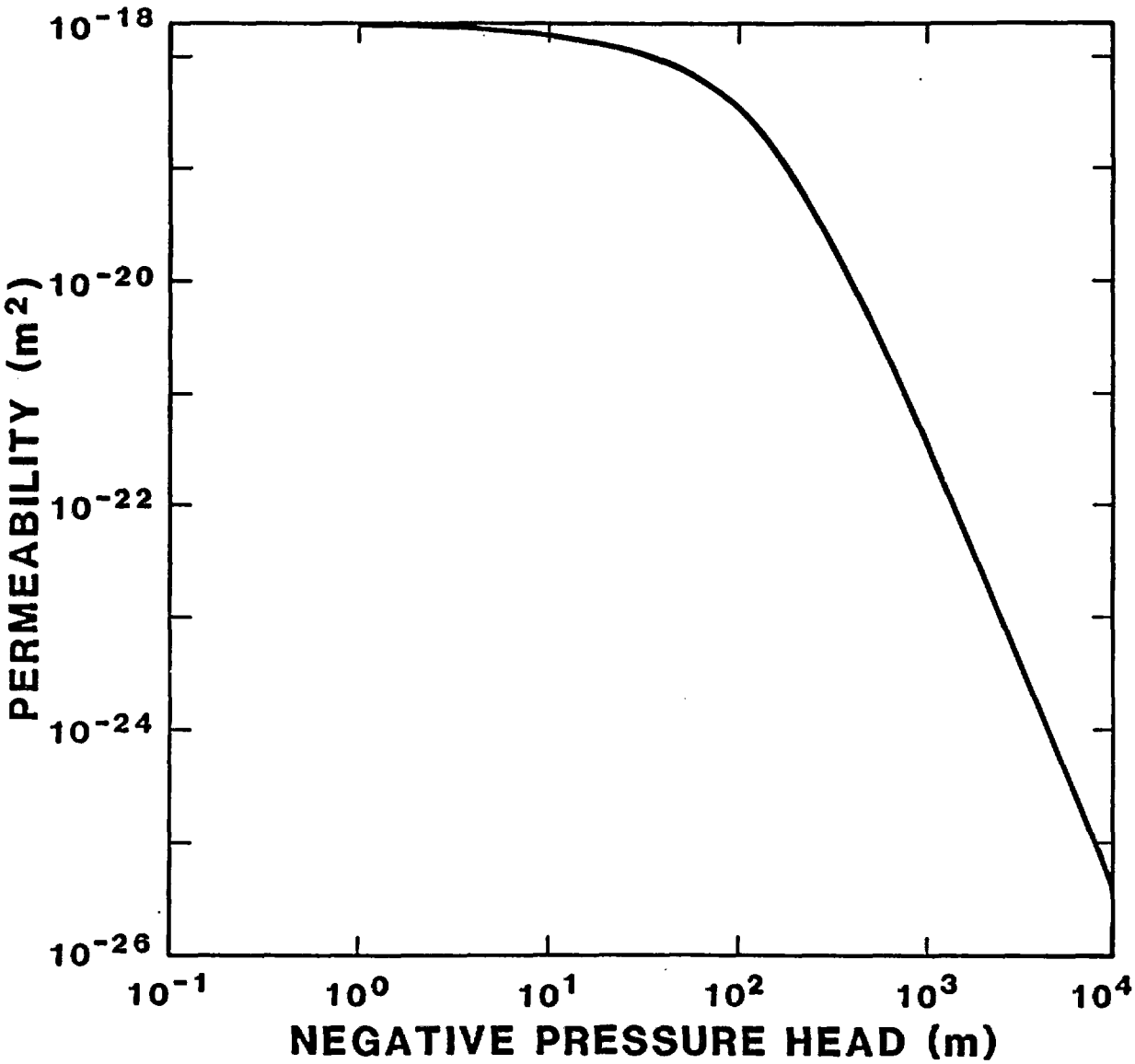

Figure 1: Matrix permeability

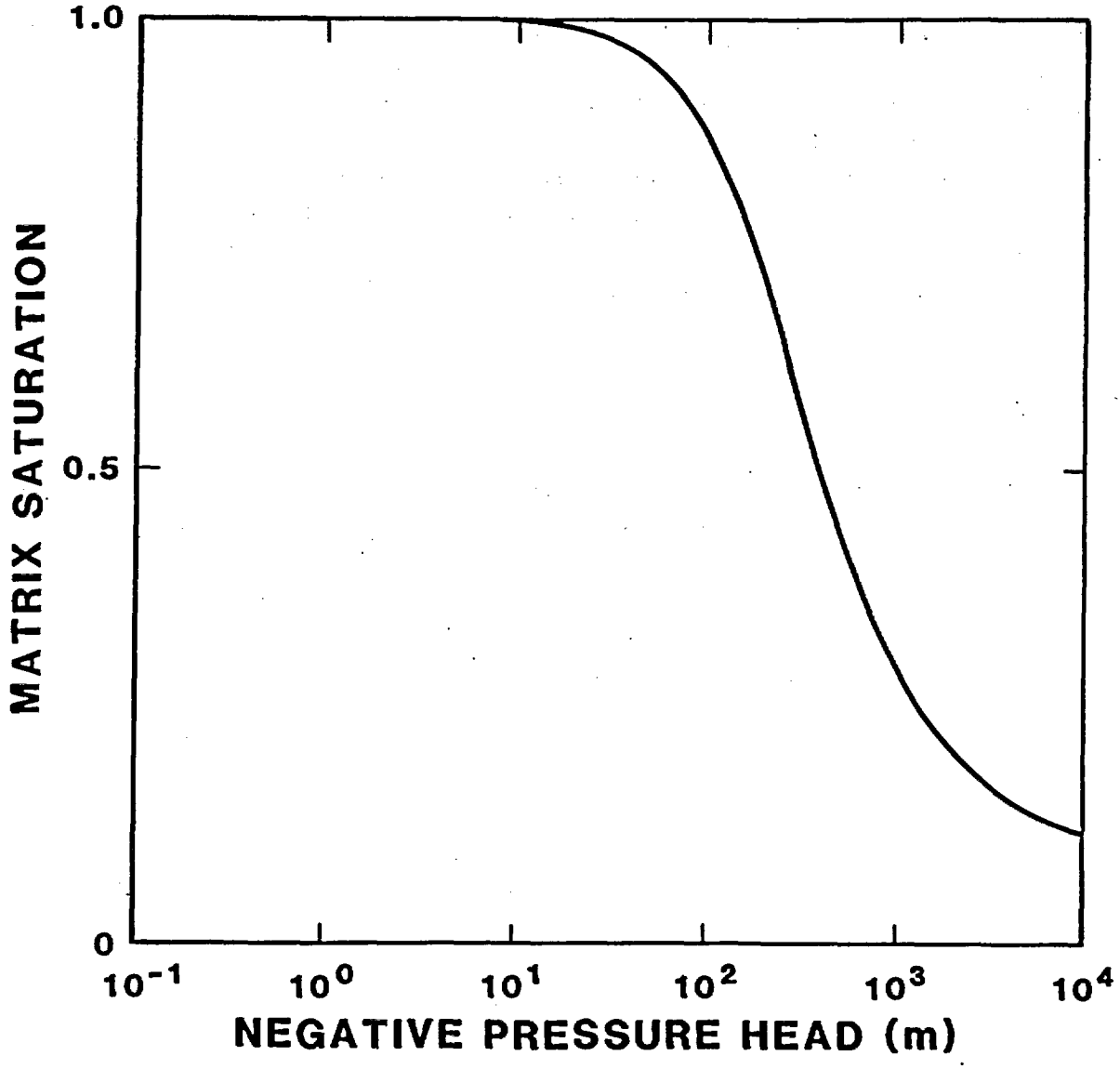

Figure 2: Matrix moisture content

When ventilation was not present ('off-time'), the drift boundary was impervious. Other boundaries were considered impervious at all times since any affect on saturation was not anticipated to extend 10 m back. The initial problem definition was used to simulate 100 years of constant ventilation. Resulting saturation time histories showed that within 1 year, material saturation is not affected beyond approximately 2 m from the drift wall. The 1-D domain was changed to 2 m back since the effective ventilation during the cycling simulations would be no longer than 1 year. The number of elements was reduced from 100 to 10 and results compared to ensure a negligible loss of accuracy. No changes were made to initial or boundary conditions. A series of simulations were then made to investigate the effect of various cycling schemes on moisture removal from the drift. Figure 3 shows a typical saturation time history at several points in the drift wall. The symbol '1' indicates a point on the drift wall surface and the symbol '6' represents a point 2 m back into the wall.

2.2 Results

The first set of cyclic ventilation calculations involved a constant ratio of on-time (ventilation) to off-time (no ventilation) equal to 1.0. The three cases are shown in Table 2.

Table 2

On-time (days)	Off-time (days)	Ratio (on-time/off-time)
2	2	1.0
20	20	1.0
200	200	1.0

Observations made in comparing results of these calculations are listed below.

- Given two cycling schemes t_1 on/t_1 off and t_2 on/t_2 off with $t_2 = a * t_1$, the relationship between the total mass removed over n cycles is of the form given by equation (5).

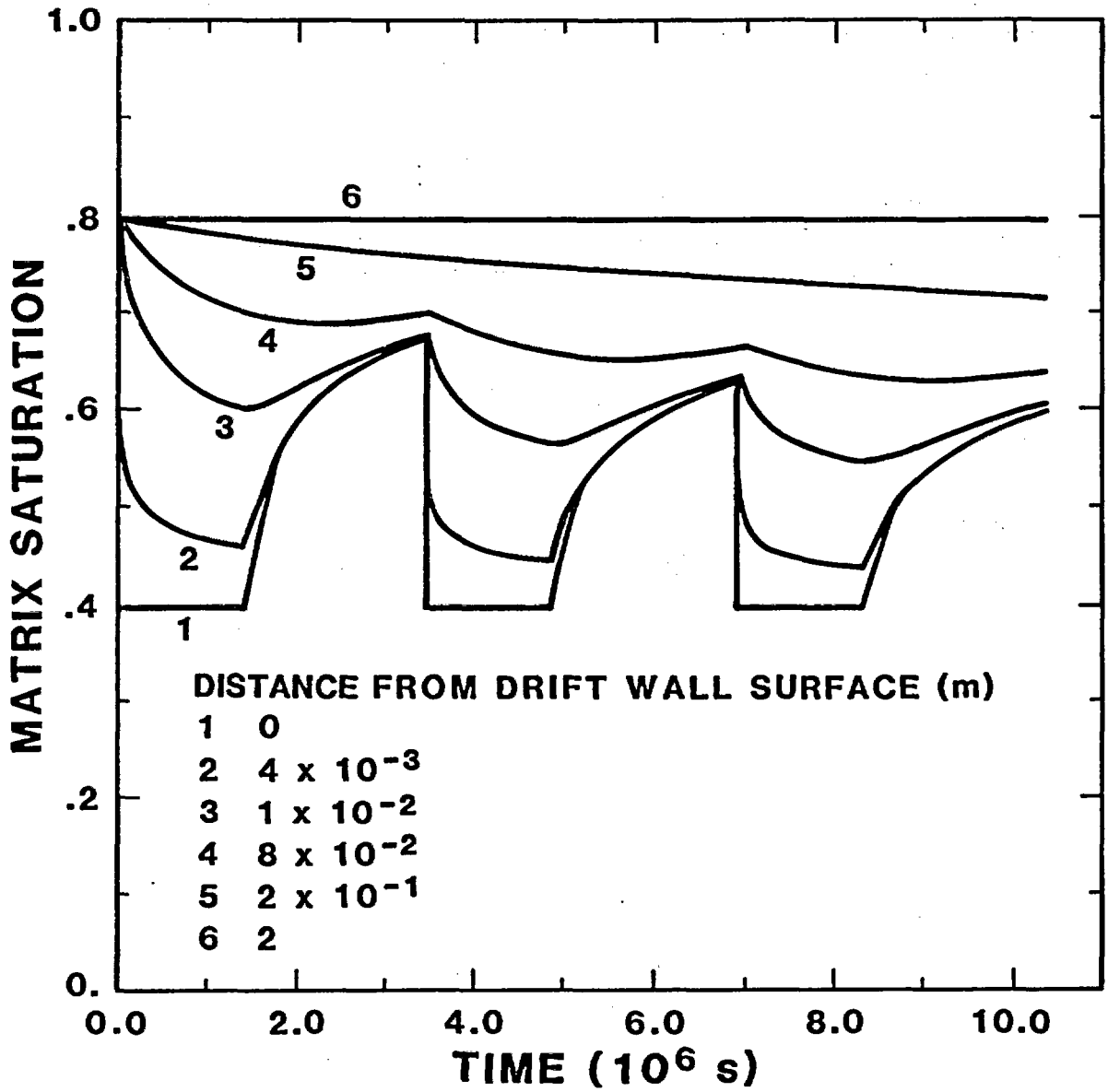

Figure 3: Saturation time history

$$MR_{t_2/t_2} = MR_{t_1/t_1}\sqrt{a} \tag{5}$$

where MR is the mass of water removed during n cycles.

Figure 4 shows the cumulative moisture removed over three cycles for the three cases described above. Analytical support of this relationship is given in Appendix A.

- The total mass removed over three cycles of the 20 on/20 off case compared with the total mass removed with constant ventilation over the same period of time showed that 70 percent of the mass removed during constant ventilation was achieved in the cycling case while using only 50 percent of the ventilation requirements.
- It is also of interest to note that the degree of resaturation at the drift wall at the end of a cycle is the same for all three of these cycling cases (Figure 5).

Another set of three cases was run to investigate cycles of constant on-time with varying off-time. These are shown in Table 3. It was observed that for a constant on-time, the longer off-time (smaller ratio) resulted in an increase in the total mass removed per cycle. This makes physical sense since an increase in material resaturation produces a greater pressure gradient when the ventilation is again applied, resulting in an increased mass removal rate over the same on-time.

Table 3

On-time (days)	Off-time (days)	Ratio (on-time/off-time)
2	4	0.50
2	10	0.20
2	20	0.10

An independent study by Carroll and Churchill[8] into 1-D heat conduction using boundary conditions analogous to those used in this study reported relationships similar to those described above. They also introduce additional analytic support.

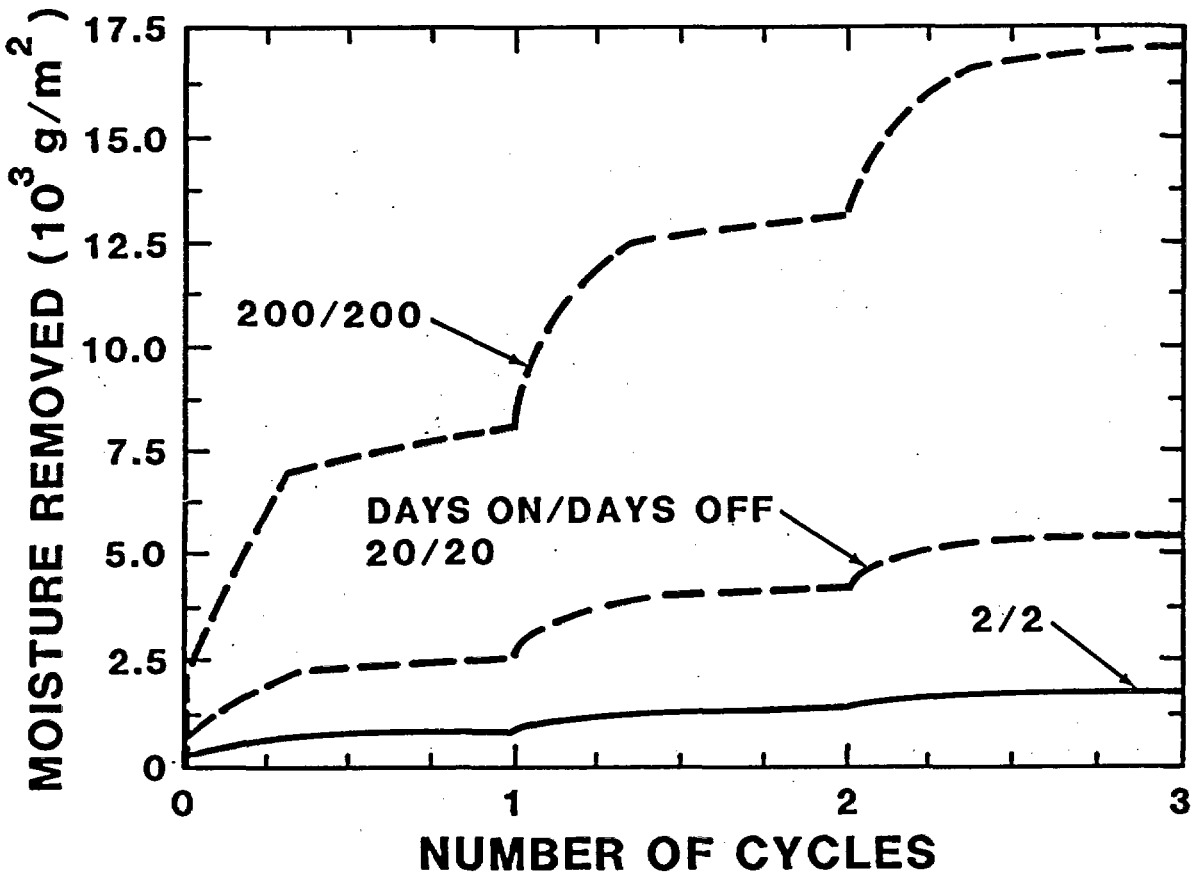

Figure 4: Case comparison of cumulative moisture removal

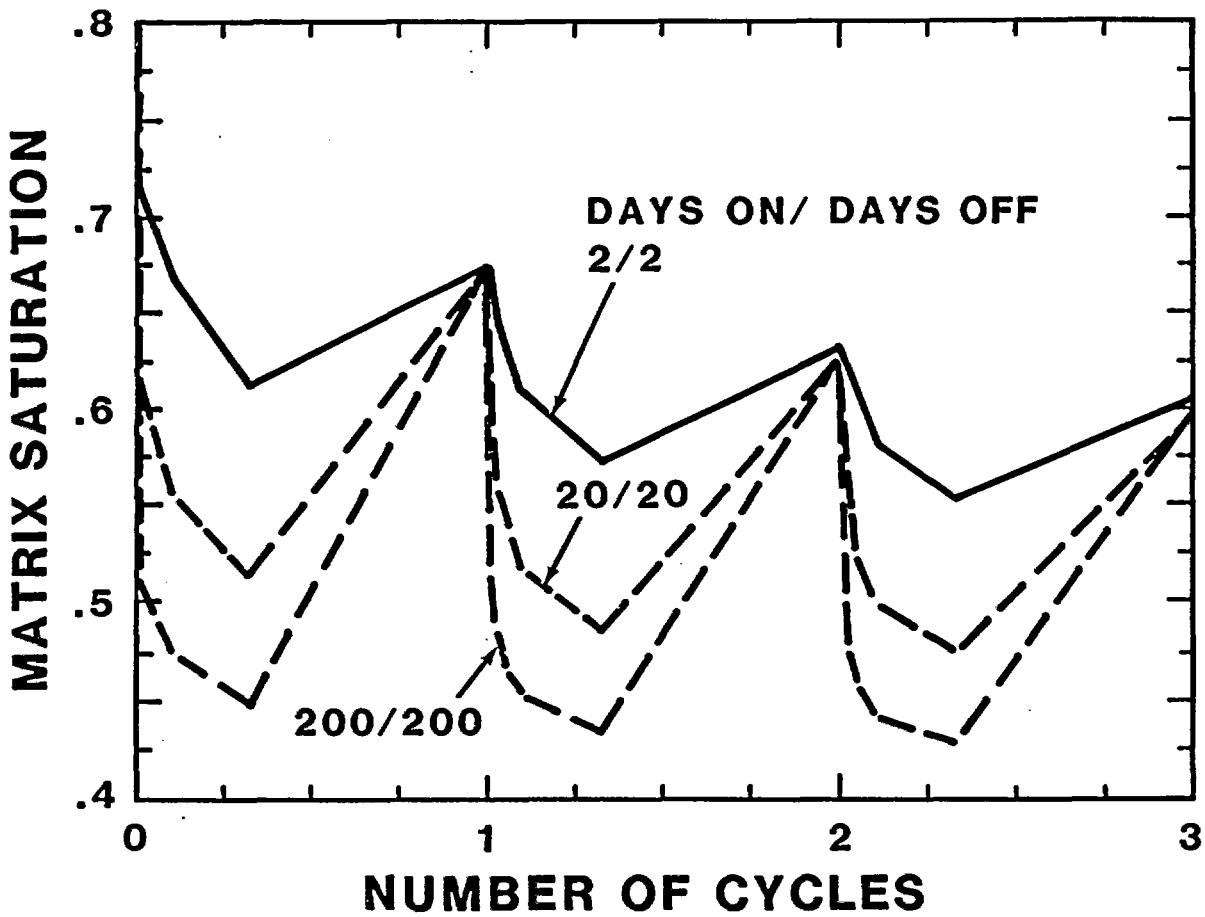

Figure 5: Case comparison of saturation near the drift wall

The previously described calculations were restricted to relatively short periods of time compared to the time period over which ventilation is expected to occur. Rates of moisture removal for the various cycling schemes varied most significantly over the first cycle (Figure 6). The next series of cycling simulations were carried out over longer periods of time using a number of different cycling schemes. The initial and boundary conditions were also changed to reflect more realistic conditions. Starting with a material saturation of 0.80, continuous ventilation was applied for 60 days as an attempt to simulate mining operations. This state was then used as the initial condition to the cycling calculations. Also, a point of lower air saturation was chosen (about 90 percent relative humidity) for the drift wall pressure boundary condition during ventilation. Results indicate that percentage differences in total mass removed between the case of constant ventilation and reasonable cycling ratios decreases with time. Figure 7 shows 12 percent difference after 1.5 years between the constant ventilation case and a cycle of 2 on/10 off, but after 3 years, the percentage drops to about 5 percent. This observation led to the assumption that a long-term simulation of constant ventilation would adequately describe the saturation due to a cyclic ventilation process. This assumption significantly reduced the computing time required for a long-term simulation since cycling cases require small time steps at the abrupt change in boundary conditions (i.e., when ventilation is turned on after an off period).

2.3 Discussion

The initial 1-D calculation of constant ventilation over 100 years indicated that ventilation appreciably reduced saturation levels in the drift wall. A series of short-term simulations provided some insight into the effects of ventilation cycling ratios and cycle periods on the removal of moisture from the drift wall. Cycling conditions provide more efficient moisture removal since the ratio of moisture removed during cyclic ventilation to that removed during constant ventilation is greater than the ratio of time that the ventilation was on during the cycling case. That is, cycling yields more moisture removal per unit power input to the ventilation equipment. Additional analysis could result in defining the ratio of mass removed for any cycling scheme to that removed during constant ventilation. Differences in the rate of moisture removal among various cycling schemes decreases within a relatively short period of time. Assuming 60 days of constant ventilation for all subsequent cases reduced the impact of the initial transient in moisture removal. The difference in total mass of water removed during cyclic versus constant ventilation became less significant as calculations were carried out over a longer period of time. This led to the assumption that constant ventilation calculations would adequately describe long-term cycling conditions for a more complex 2-D model.

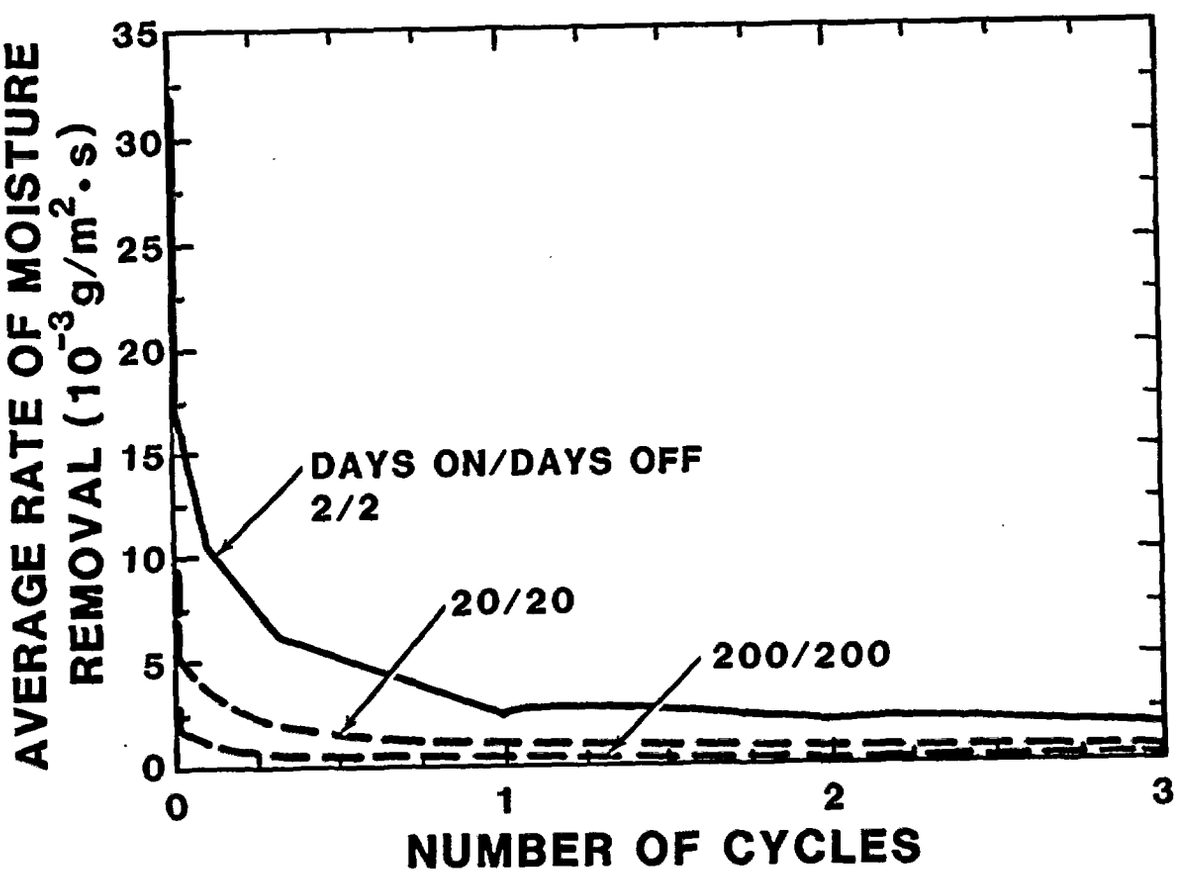

Figure 6: Case comparison of moisture removal rates

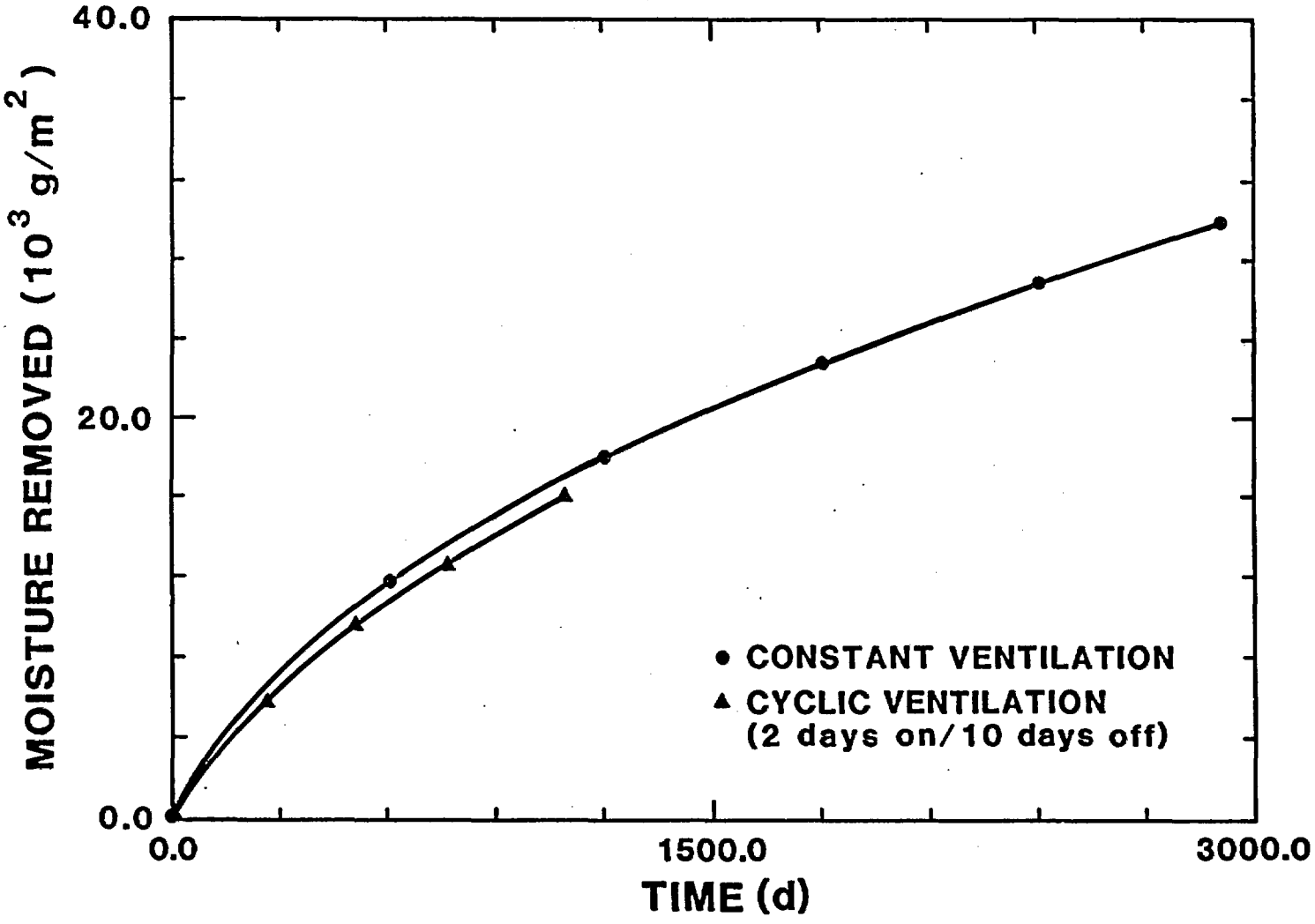

Figure 7: Mass removed with constant and cyclic ventilation

3 Two-Dimensional Studies

The purpose of more detailed 2-D calculations was to estimate saturation levels and flow conditions resulting from drift ventilation using a proposed waste emplacement geometry. Analyzing water velocities in the vicinity of the waste canister provides a means of approximating the long-term effect of ventilation on the advection of potentially hazardous solutes away from the repository region. Variation of boundary conditions was also considered.

3.1 Problem Definition

The vertical emplacement scheme depicted in Figure 8 was chosen for the long-term simulation. The material assumed throughout the domain represents that found at the repository level at Yucca Mountain. The properties are given in Table 1. The initial conditions were defined by reaching steady state with a water infiltration rate of 0.5 mm/year through the host rock. This infiltration described the boundary condition at the top of the domain. The pressure at the bottom of the domain was held constant at a value consistent with its elevation above the water table and the given infiltration rate. The perimeter of the drift wall was held at a pressure defined by equation (4), assuming a relative humidity of 90 percent for the ventilation air. The corresponding drift wall saturation is 25 percent. All other boundaries were considered impervious. These boundary conditions are indicated in Figure 9. The finite element grid used as input to SAGUARO is shown in Figure 10. The simulation involved ventilation applied continuously for 50 years and then terminated. The calculations were then continued for an additional 250 years to simulate the recovery period during which the host rock resaturated to a level approaching the initial infiltration steady state.

3.2 Results

Figure 11 shows the fluid velocity vectors and saturation contour at the initial steady-state conditions. Ventilation was then applied. Figure 12 indicates that after 4.5 months of constant ventilation, the fluid velocity near the canister location is changing direction, thus drawing the water toward the drift and inhibiting solute transport away from the repository region. The velocity vectors within 2 m of the drift wall were not plotted in Figures 12 and 13 to allow a constant vector scaling factor, giving some resolution to the velocity field in the vicinity of the canister. The fluid velocity field at the end of the 50-year ventilation period is shown in Figure 13. Ventilation was then stopped and recovery proceeded as indicated in Figures 14 through 16. After 20 years without ventilation (Figure 14), the fluid is still being drawn toward the drift although

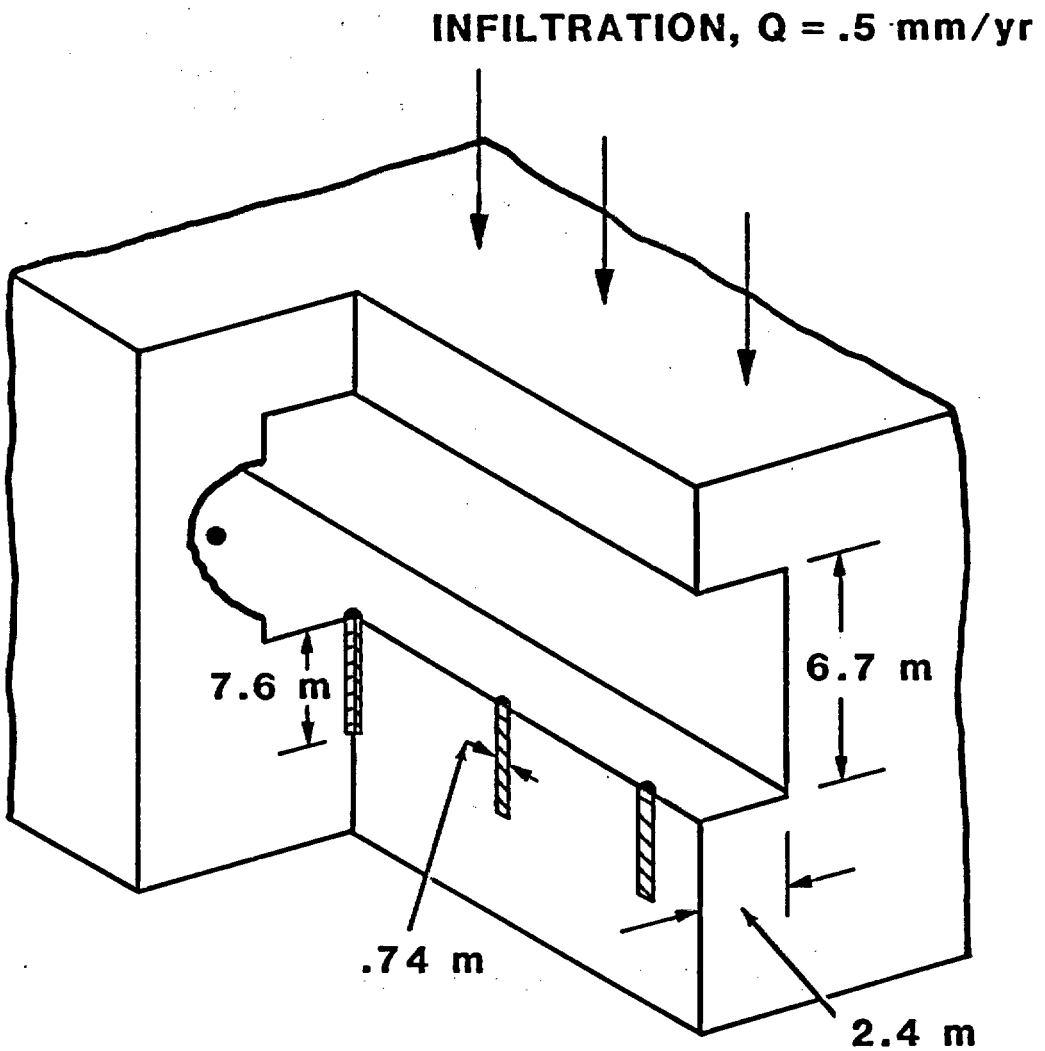

Figure 8: Proposed vertical emplacement scheme

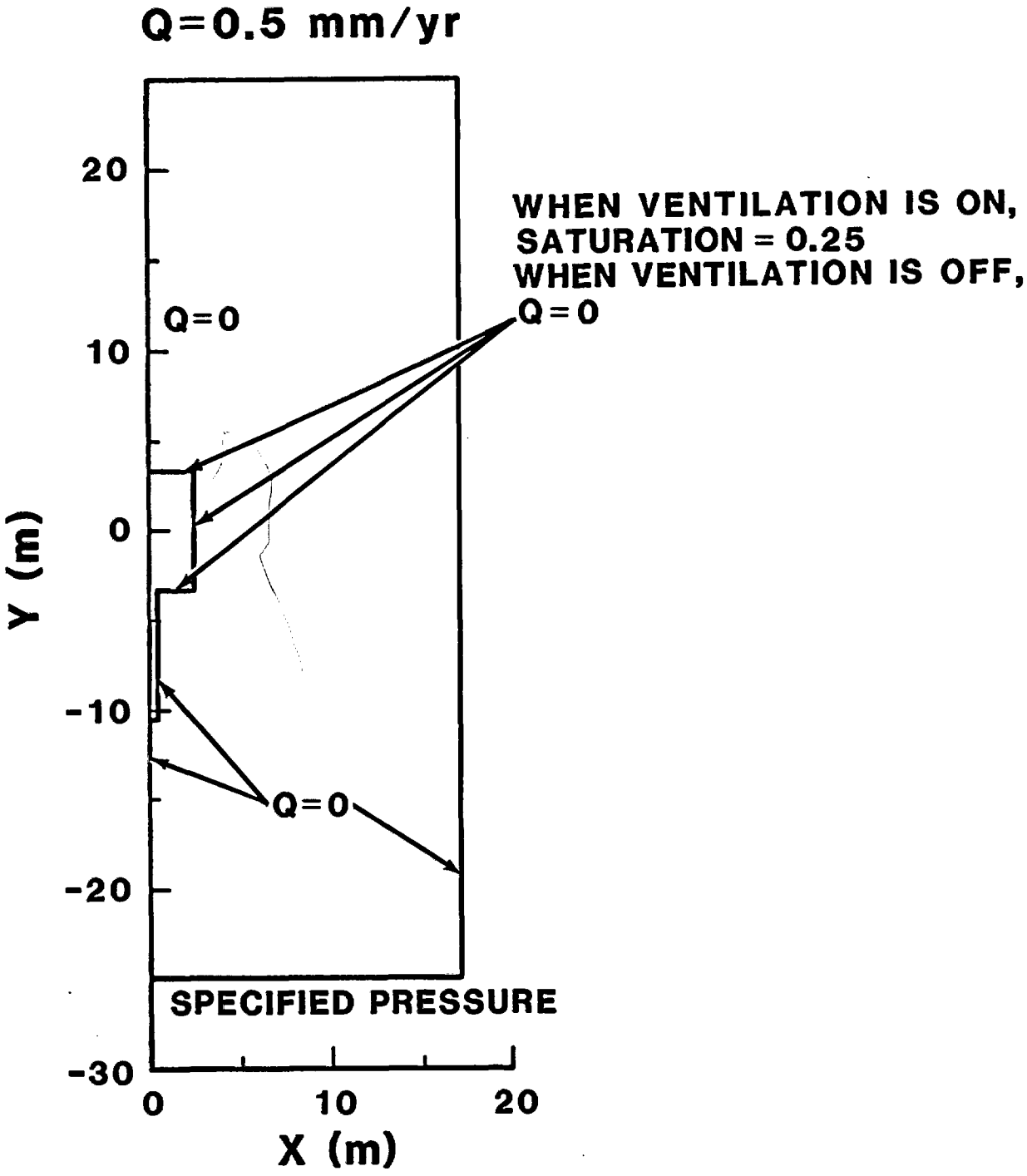

Figure 9: Boundary conditions

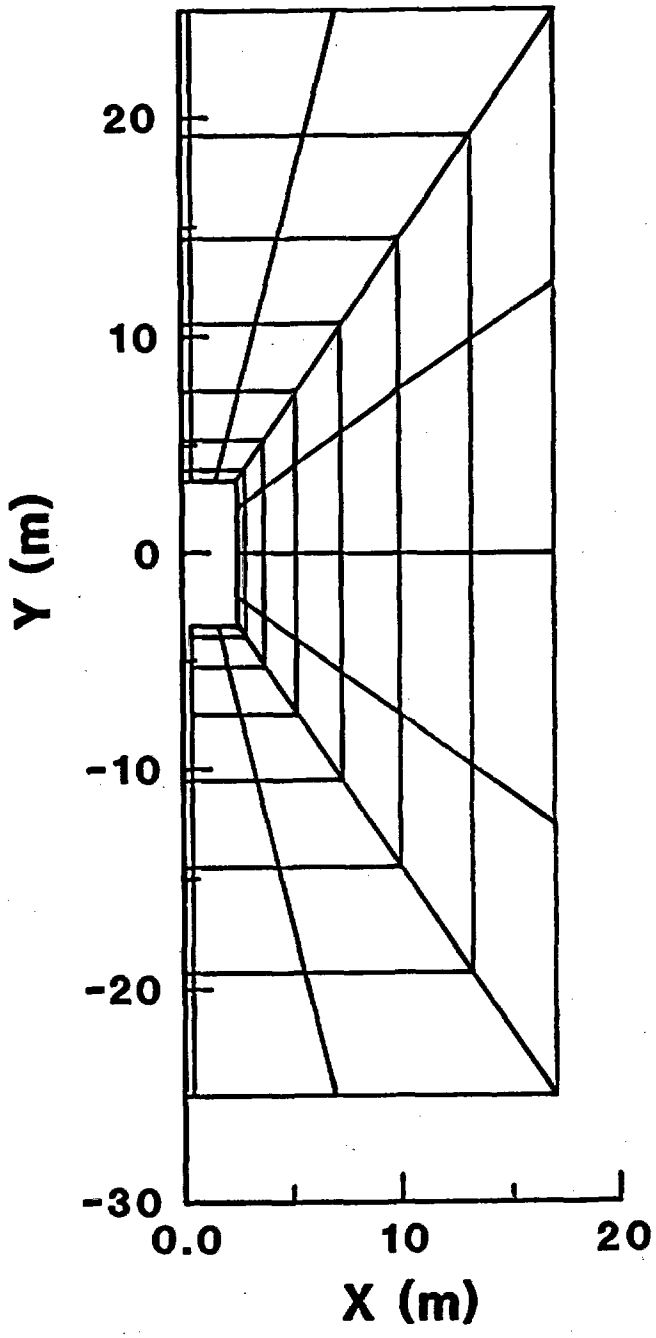

Figure 10: Finite element grid, 66 elements

at a lower rate. After 150 years (Figure 15), the fluid velocity near the canister has changed flow directions. After 225 years without ventilation, all of the fluid in the region below the canister begins again to flow away from the canister, thus ending the period of enhanced containment due to the ventilation. Figure 16 shows the first calculated velocity field after this direction change.

3.3 Variation of Model Parameters

The infiltration rate of water through the domain most obviously has an effect on the water velocities in the vicinity of the waste canister. Therefore, the simulation described above was repeated with an infiltration rate of 0.1 mm/year. This rate is more likely than the 0.5 mm/yr rate to occur under current conditions at Yucca Mountain.[9] Figure 17 shows the fluid velocity vectors and saturation contours at the initial steady-state conditions for the 0.1 mm/yr infiltration rate. Ventilation was then applied. Figure 18a indicates that after 11 years of constant ventilation, the fluid velocity at the lower end of the canister has changed direction, thus drawing the water up toward the drift and inhibiting solute transport away from the repository region. A similar velocity change at the lower end of the canister location occurs after about 2 years of ventilation for the 0.5 mm/yr infiltration rate (Figure 18b). The fluid velocity field and saturation contours at the end of the 50-year ventilation period are shown in Figure 19. Ventilation was then stopped and recovery proceeded. At both 22 and 158 years (Figure 20) after ventilation, the fluid is still being drawn towards the drift although at an increasingly lower rate. Then, 380 years after ventilation, all of the fluid in the region for the 0.1 mm/yr case begins again to flow away from the canister, thus ending the period of enhanced containment due to the ventilation. This occurs after 225 years of recovery in the 0.5 mm/yr case. Figures 21 and 22 show the first computed velocity field after this direction change for the 0.5 mm/yr case and the 0.1 mm/yr case, respectively.

The simulation using 0.1 mm/year infiltration was repeated using an assumed air relative humidity of 95 percent to consider the effect of the assumed drift wall boundary condition during ventilation. Results indicate that the 5.5 percent increase in air relative humidity decreases the time of enhanced containment by 20 percent (from 420 years to 330 years). The conditions and results of the three simulations described here are summarized in Table 4.

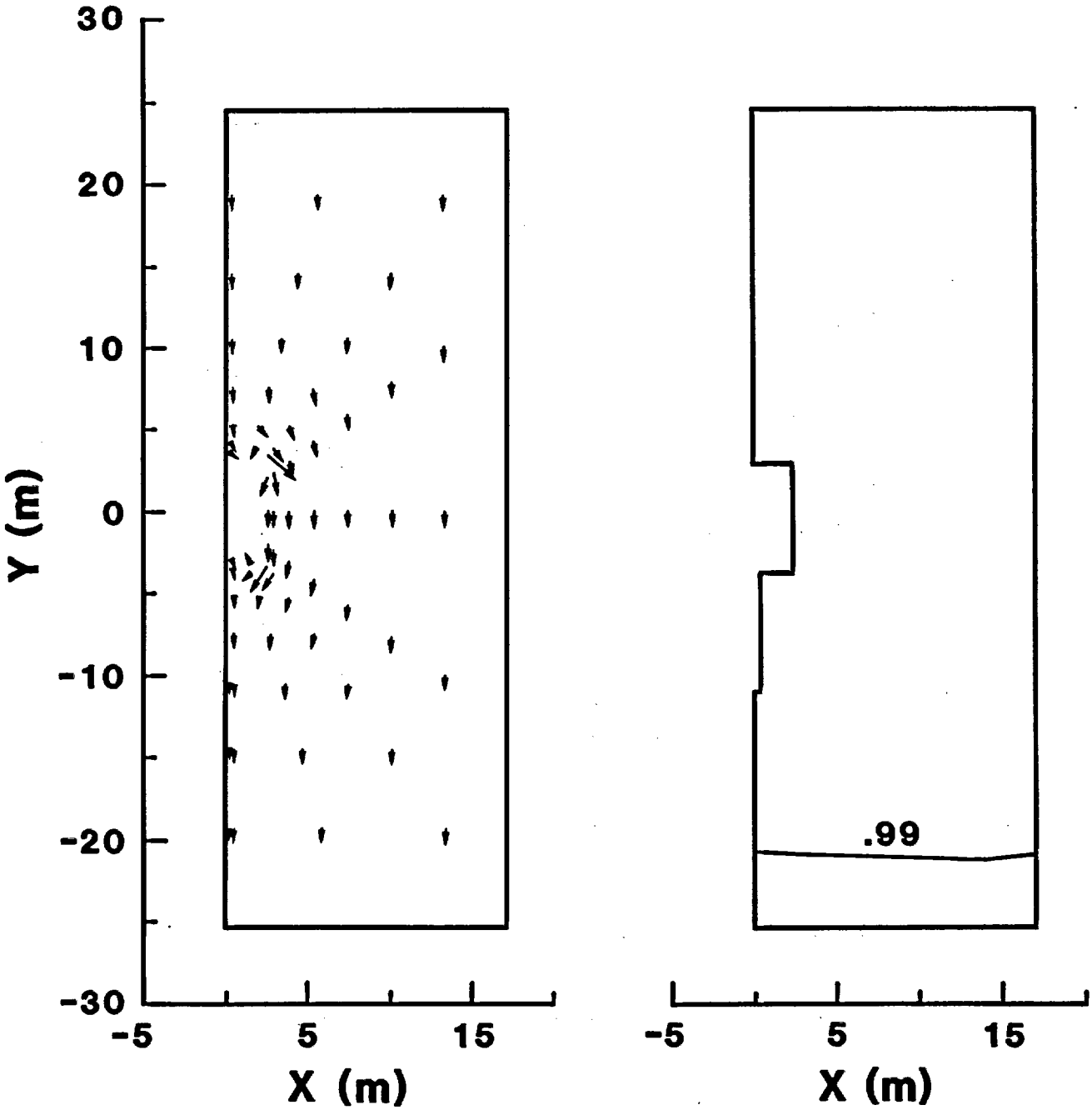

Figure 11: Fluid velocity vectors and saturation contour at initial steady-state conditions (0.5 mm/yr)

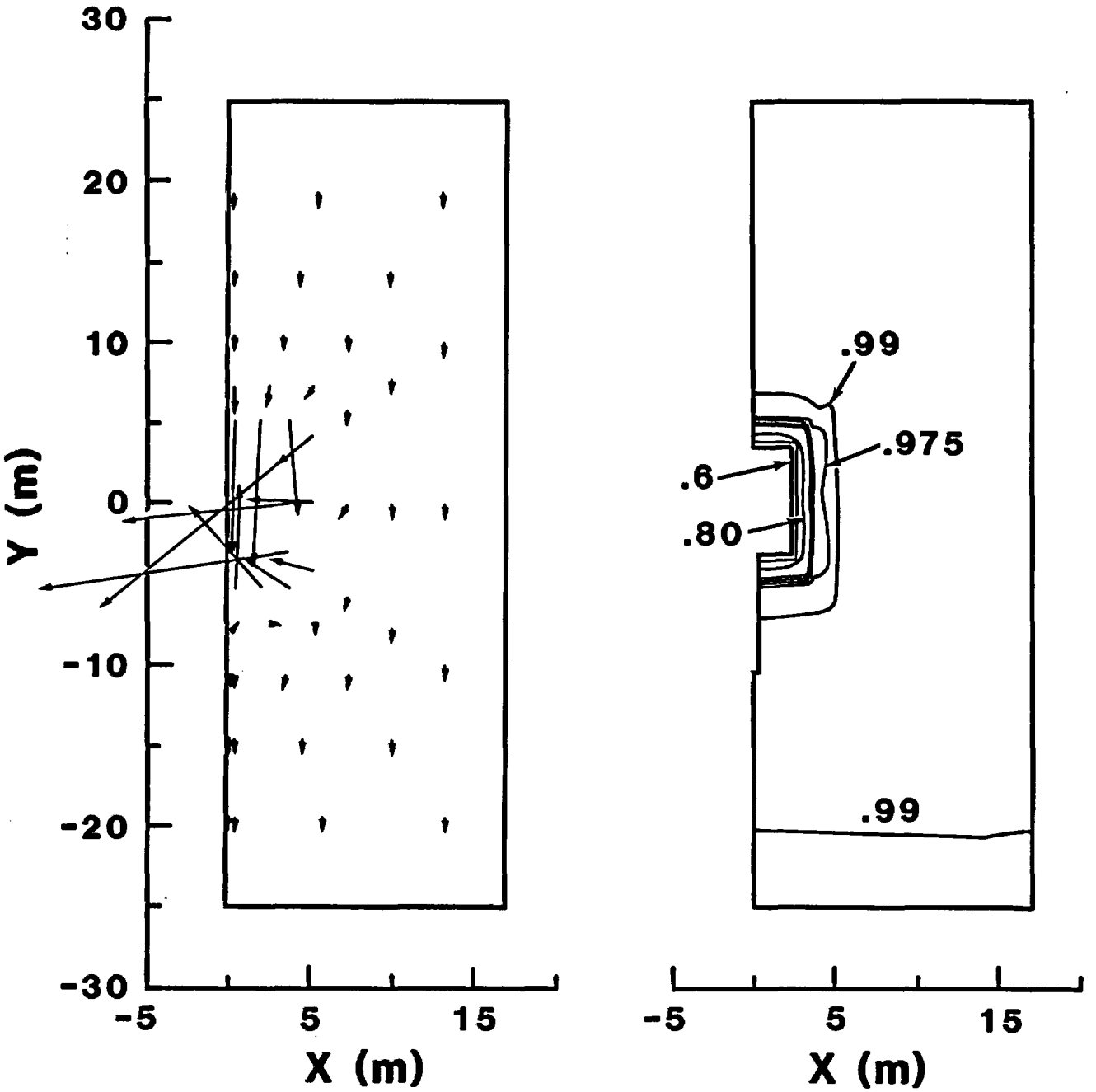

Figure 12: Fluid velocity vectors and saturation contours after 4.5 months of constant ventilation (0.5 mm/yr)

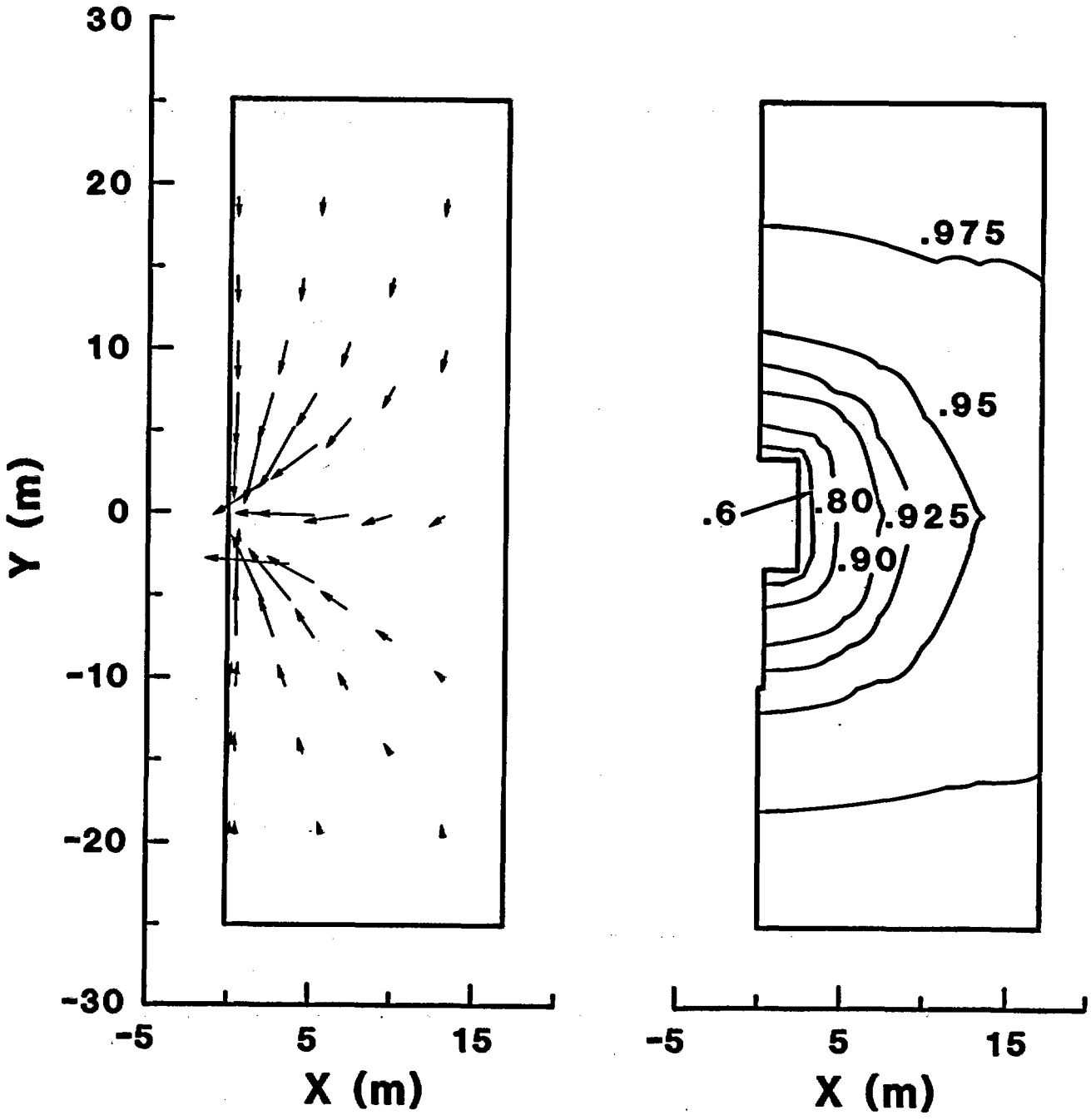

Figure 13: Fluid velocity vectors and saturation contours after 50 years of constant ventilation (0.5 mm/yr)

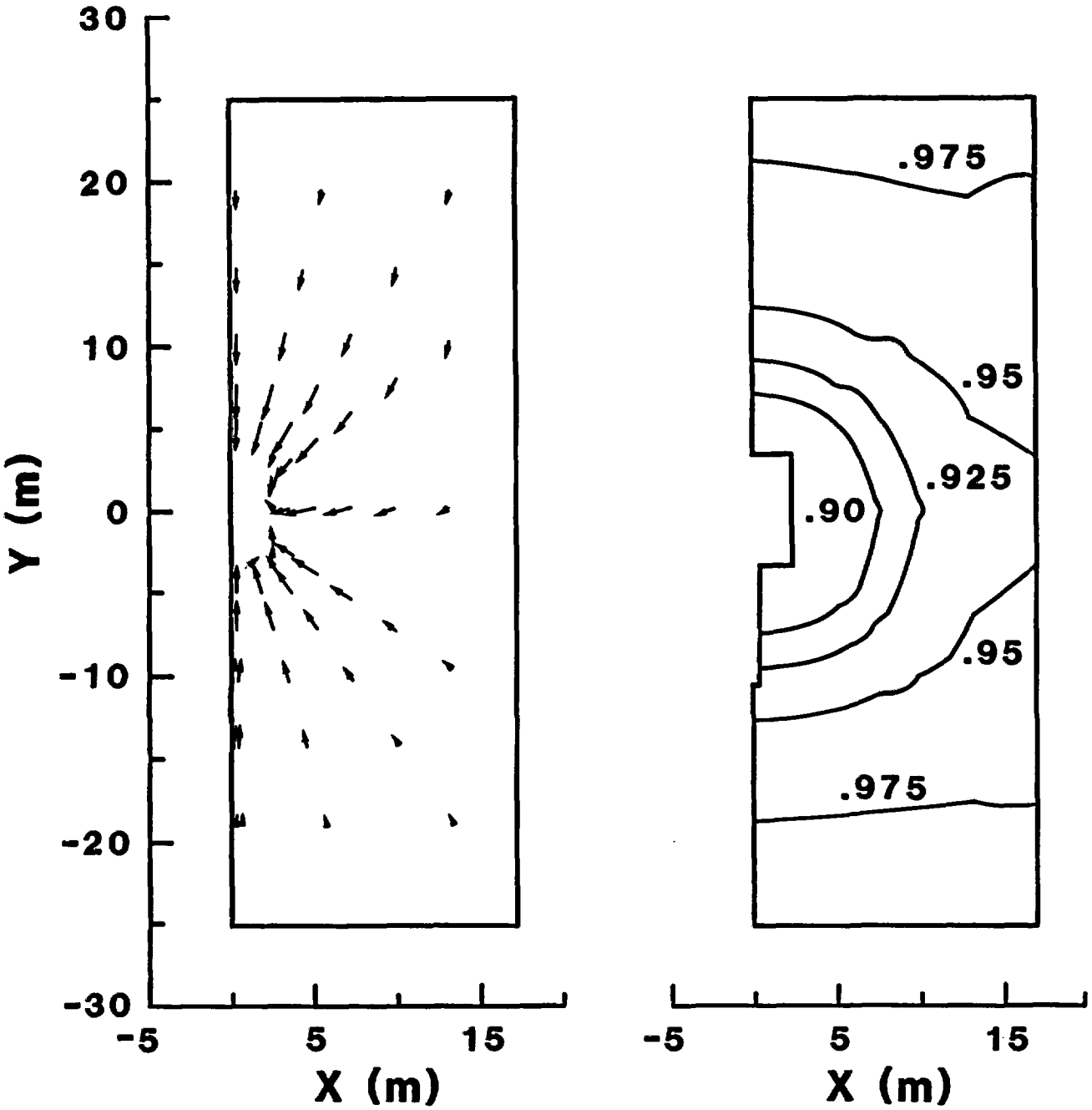

Figure 14: Fluid velocity vectors and saturation contours 20 years after termination of ventilation (0.5 mm/yr)

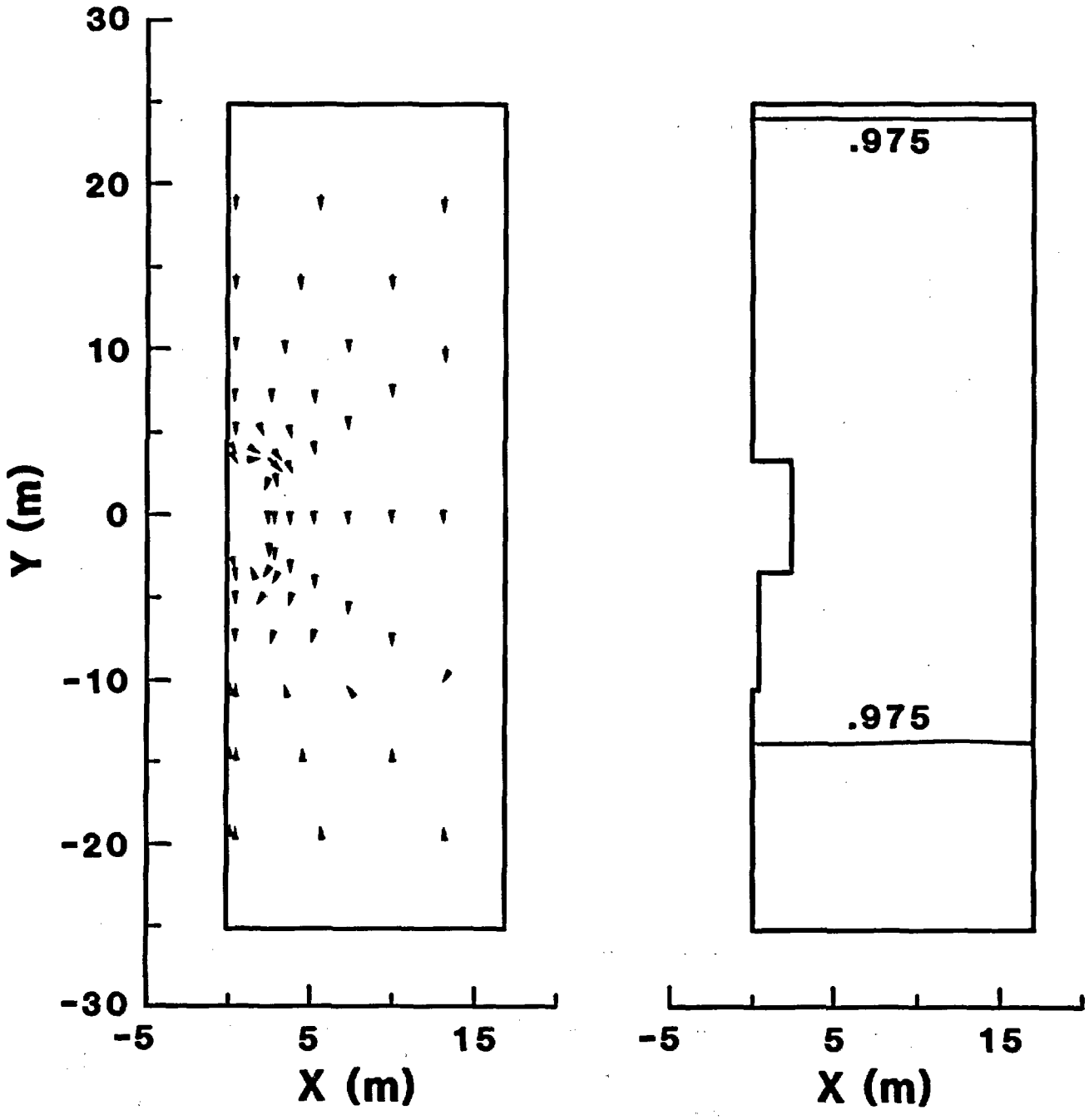

Figure 15: Fluid velocity vectors and saturation contours 150 years after termination of ventilation (0.5 mm/yr)

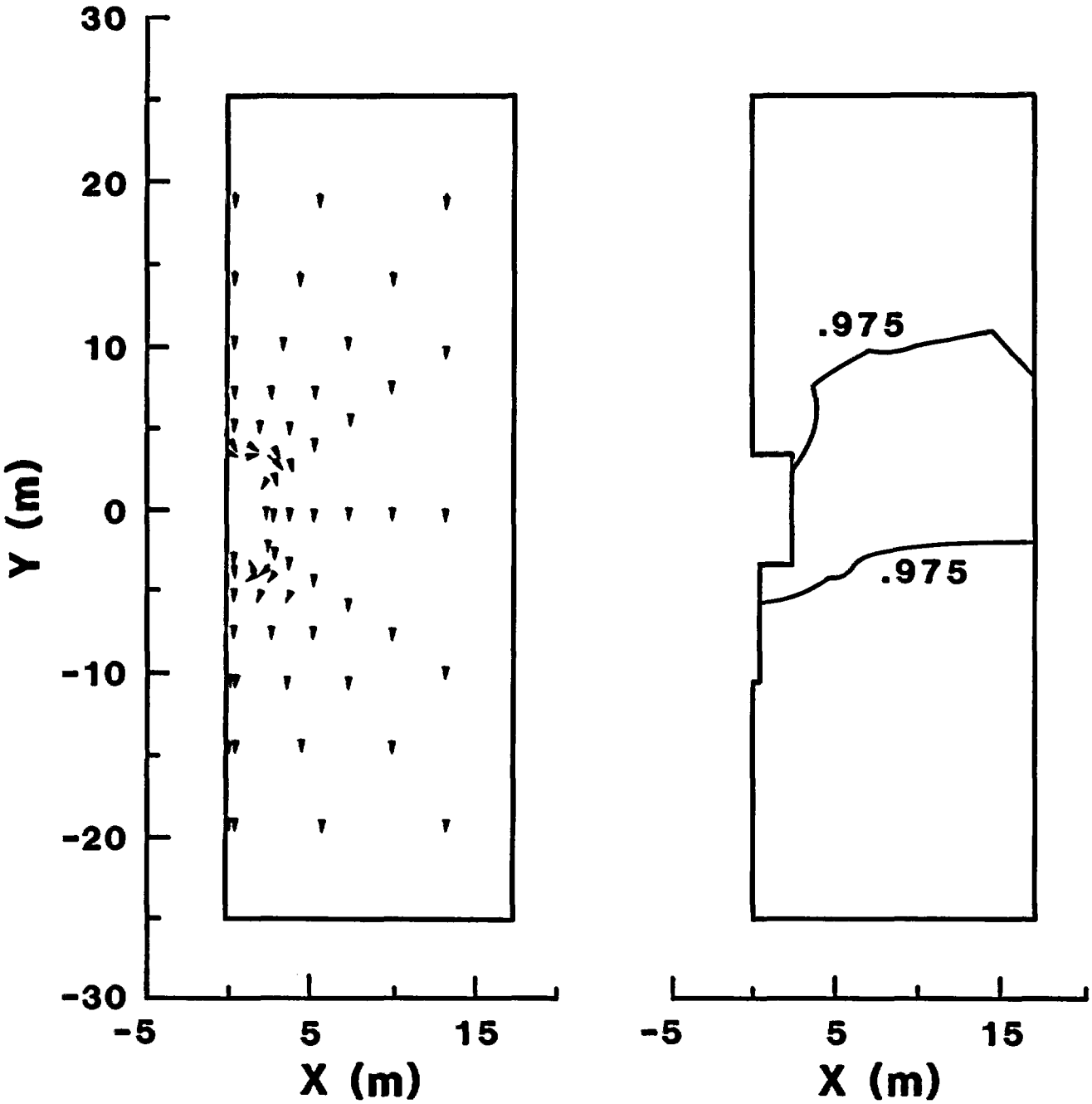

Figure 16: Fluid velocity vectors and saturation contours 250 years after termination of ventilation (0.5 mm/yr)

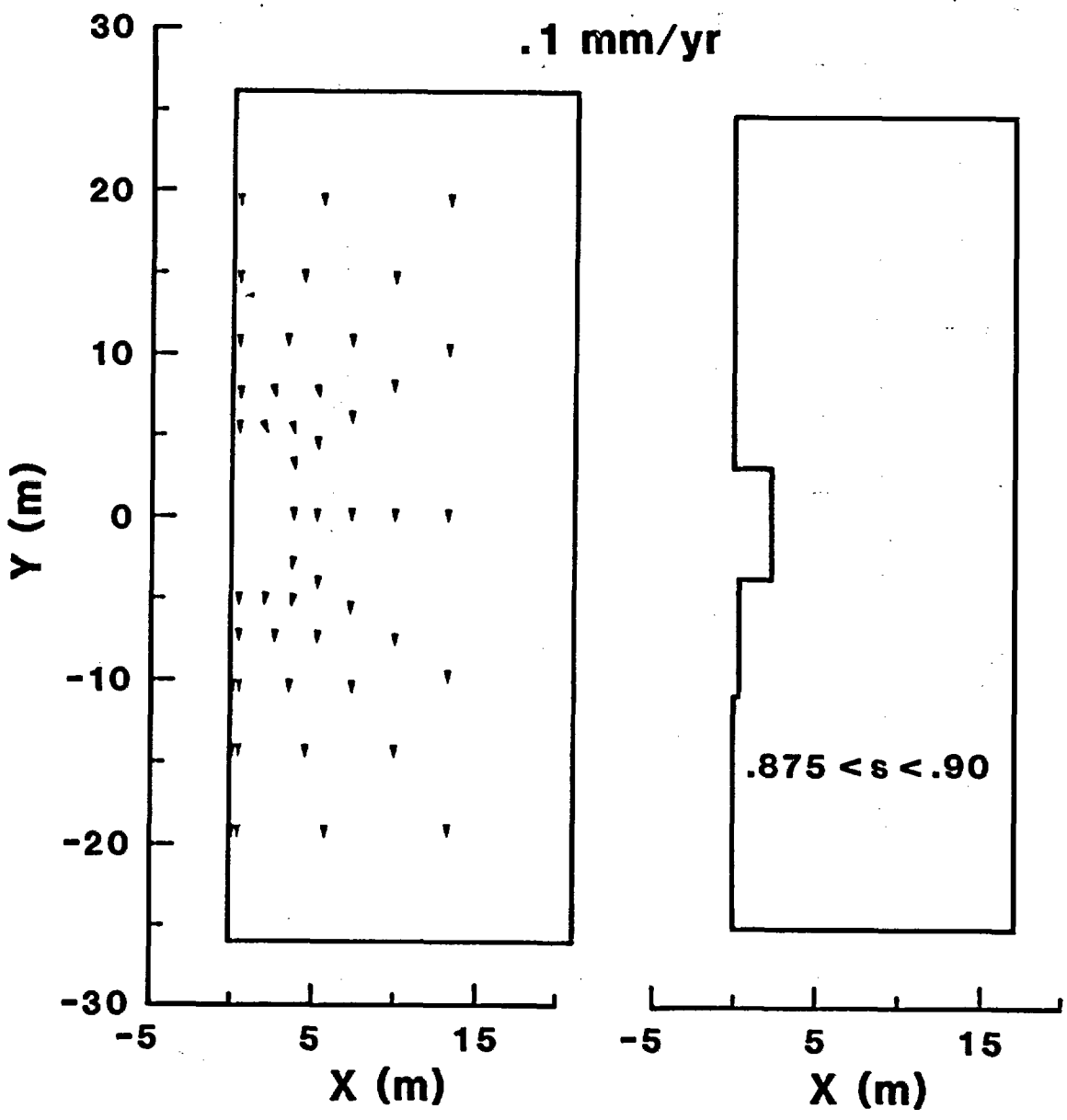

Figure 17: Fluid velocity vectors and saturation at initial steady-state conditions (0.1 mm/yr)

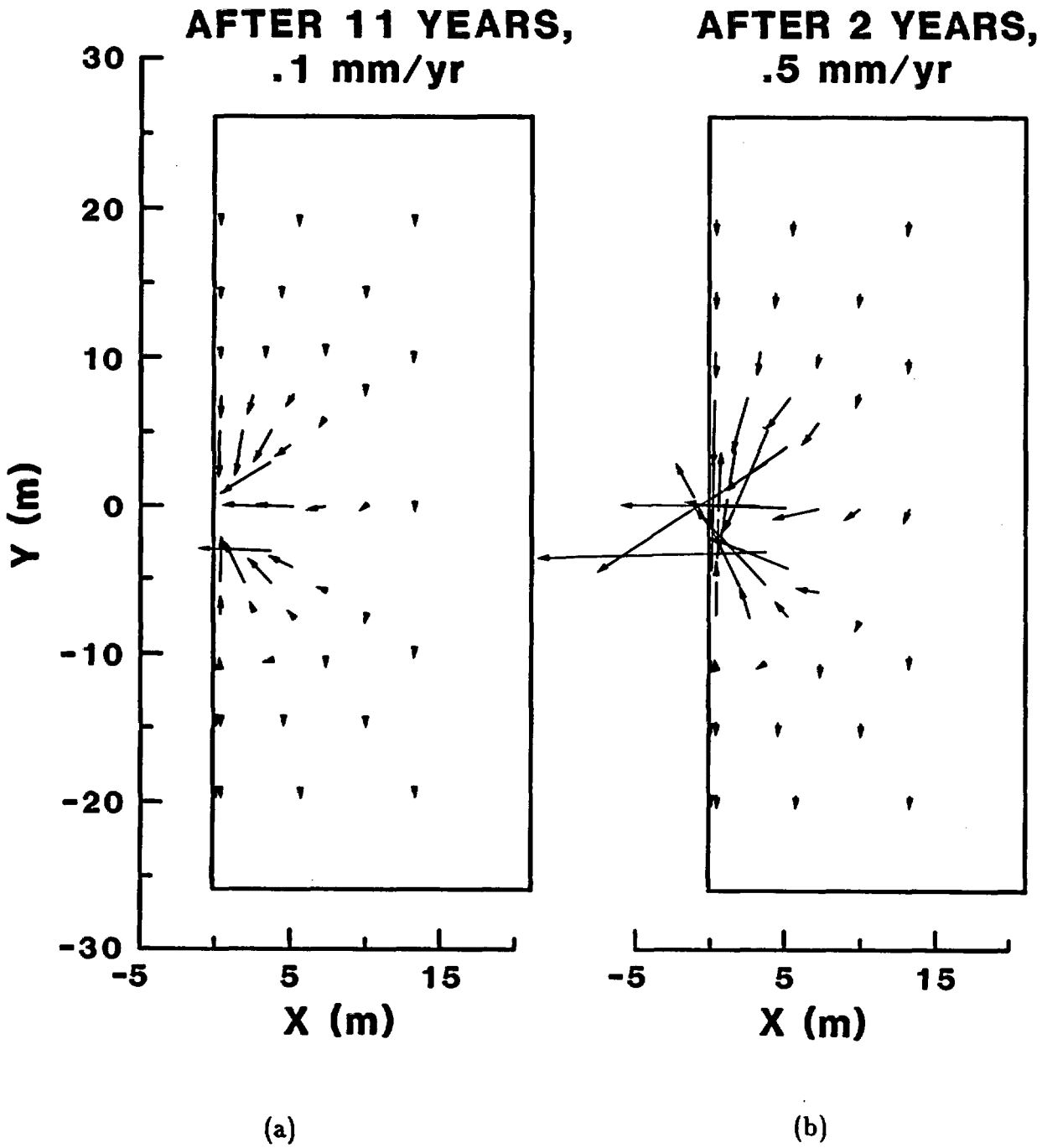

Figure 18: Fluid velocity vectors (a) after 11 years at 0.1 mm/yr and (b) after 2 years at 0.5 mm/yr

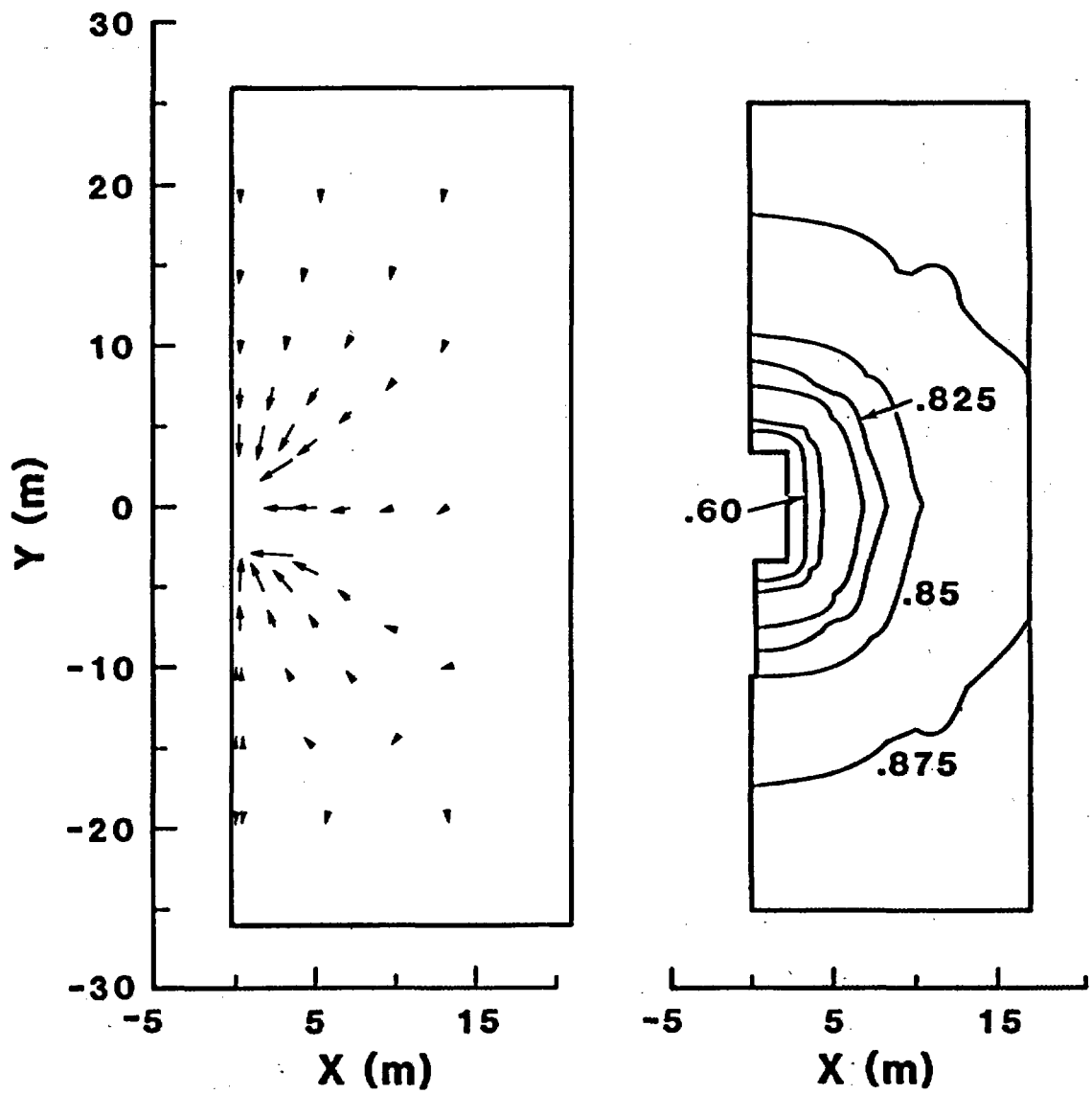

Figure 19: Fluid velocity vectors and saturation contours after 50 years of constant ventilation (0.1 mm/yr)

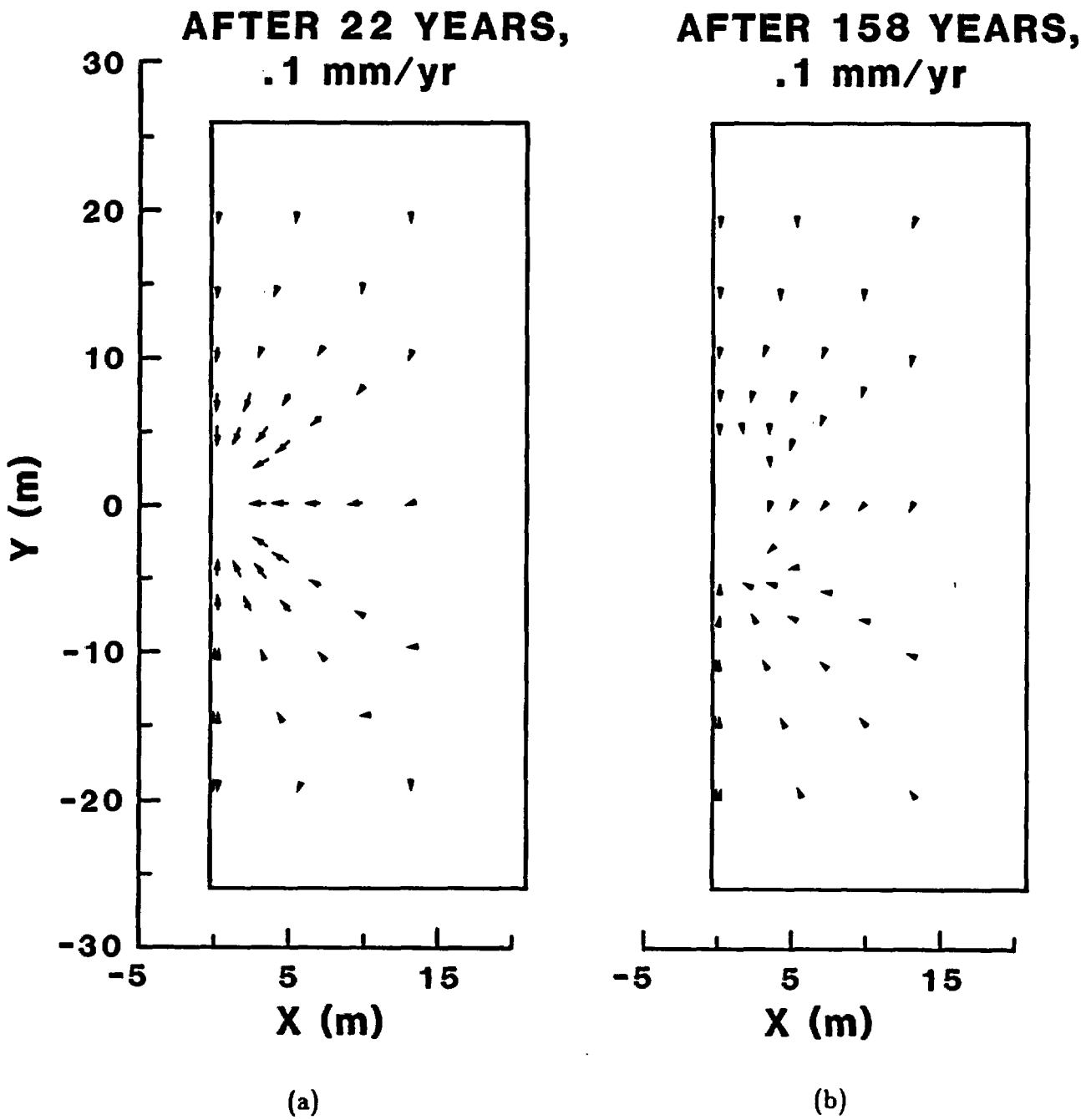

Figure 20: Fluid velocity vectors (a) after 22 years and (b) after 158 years (0.1 mm/yr)

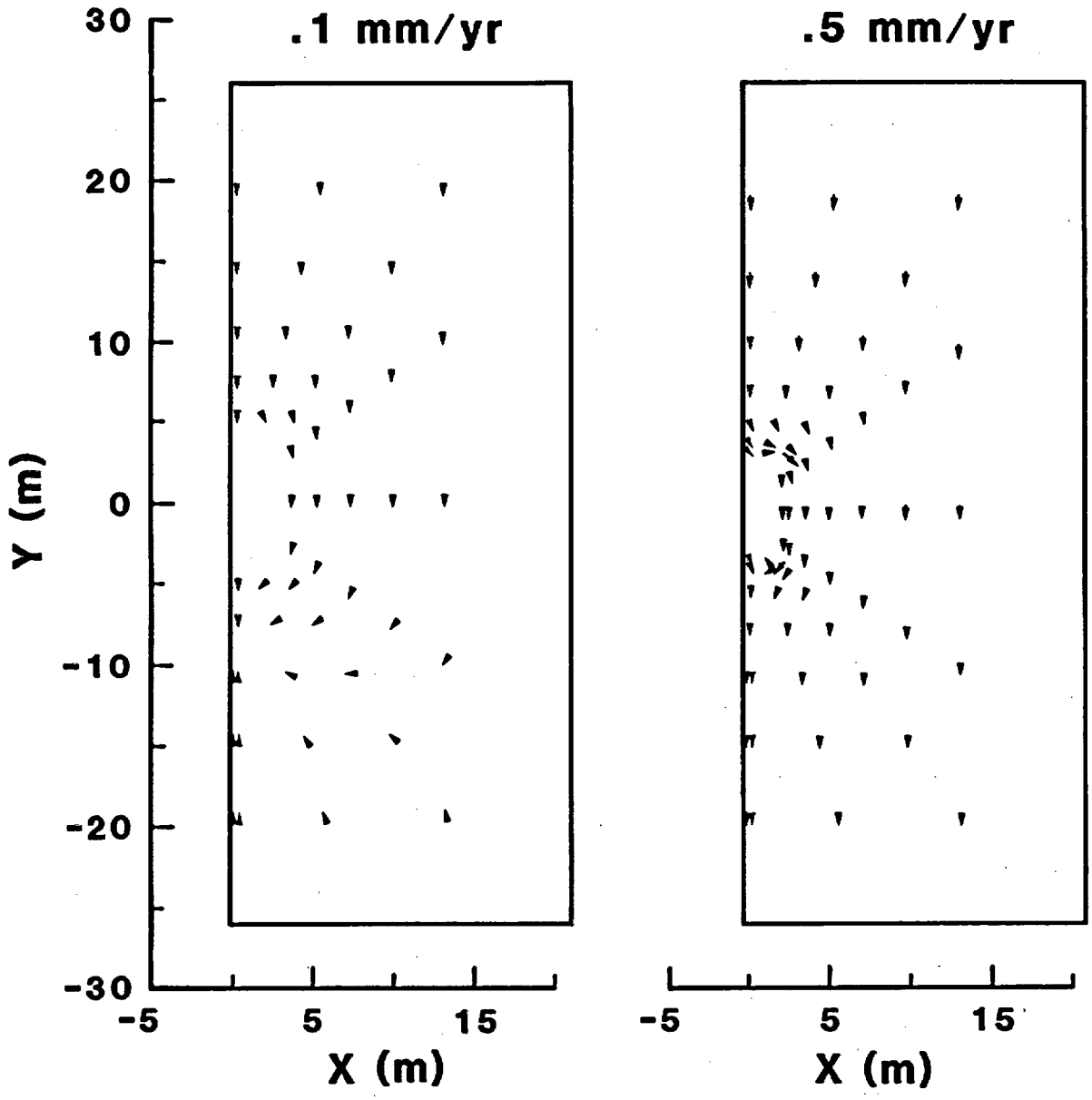

(a) (b)

Figure 21: Fluid velocity vectors 238 years after termination of ventilation at (a) 0.1 mm/yr and (b) 0.5 mm/yr

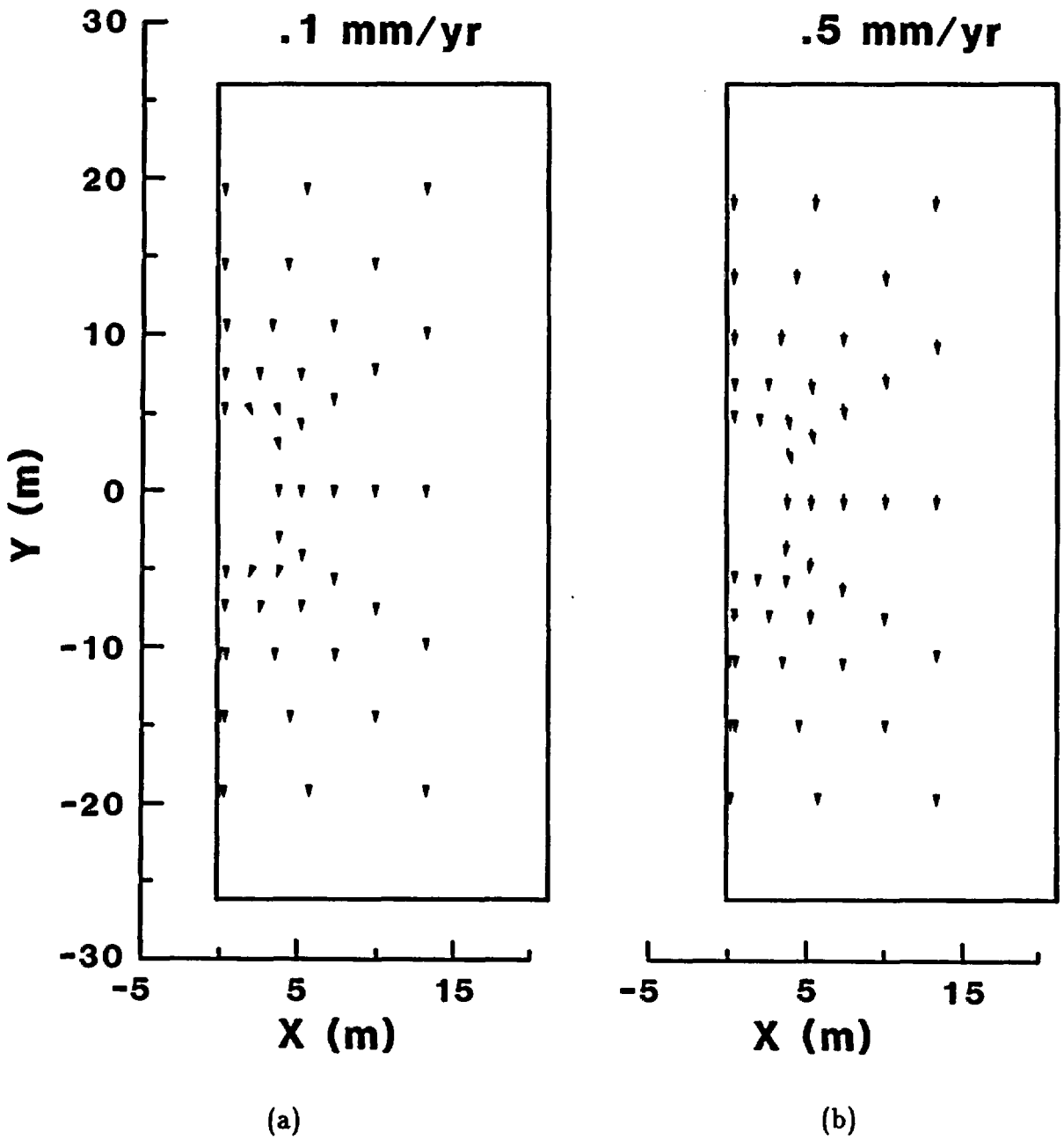

Figure 22: Fluid velocity vectors 450 years after termination of ventilation at (a) 0.1 mm/yr and (b) 0.5 mm/yr

Table 4

Simulation Number	Infiltration Rate (mm/yr)	Air Relative Humidity (%)	Years of Enhanced Containment
1	0.5	90	275
2	0.1	90	420
3	0.1	95	330

3.4 Discussion

Under the conditions of the 2-D simulation of constant ventilation for 50 years and subsequent recovery period, the fluid velocity field indicates that advective contaminant transport could be prevented for more than 250 years. Sensitivity of these results to the prescribed boundary conditions, in particular to the infiltration rate and the saturation at the drift wall during ventilation, was considered. From the 2-D simulation of constant ventilation for 50 years and subsequent recovery period with a 0.1 mm/yr infiltration, the fluid velocity field indicates that advective contaminant transport could be inhibited for 420 years. Lower saturation levels in general due to the decreased infiltration rate contribute to the longer time of enhanced containment. These results are also sensitive to the assumed air relative humidity, which will vary since the initially dry ventilation air saturates as it passes along the drift. However, the air saturation assumed may be conservative as an average saturation value. A more extensive sensitivity study would give insight into the extreme upper and lower bounds of these boundary effects.

There are other model parameters that affect these results, including material permeability, porosity and fracture characteristics. This study did not consider the effects of their variation.

4 Conclusion

Under the simulation conditions of drift ventilation described in this report, the following observations have been made:

One-dimensional cases:

- Drift ventilation appreciably reduces drift wall saturation.
- Cyclic ventilation increases the efficiency of moisture removal, i.e., more moisture is removed per unit of power input for cyclic versus constant ventilation.
- For reasonable cycling conditions under consideration, the cumulative flux approaches that of constant ventilation as time progresses.

Two-dimensional cases:

- Drift ventilation may be used to postpone the onset of advective transport of solutes away from the repository region.
- The period and extent of enhanced containment is a function of the infiltration rate and the relative humidity of the ventilation air, as well as other factors not considered in this report.

5 References

1. Eaton, R. R., D. K. Gartling, and D. E. Larson, SAGUARO — A Finite Element Computer Program for Partially Saturated Porous Flow Problems, *Sandia National Laboratories*, Albuquerque, NM, SAND82-2772, March 1983.

2. Ortiz, T. S., R. L. Williams, F. B. Nimick, B. C. Whittet, and D. L. South, A Three-Dimensional Model of Reference Thermal/Mechanical and Hydrological Stratigraphy at Yucca Mountain, Southern Nevada, *Sandia National Laboratories*, Albuquerque, NM, SAND84-1471, 1985.

3. Peters, R. R., E. A. Klavetter, I. J. Hall, S. C. Blair, P. R. Heller, G. W. Gee, Fracture and Matrix Hydrologic Characteristics of Tuffaceous Materials from Yucca Mountain, Nye County, Nevada, *Sandia National Laboratories*, Albuquerque, NM, SAND84-1471, December 1984.

4. van Genuchten, R., Calculating the Unsaturated Hydraulic Conductivity with a New Closed Form Analytical Model, *Water Resources Bulletin*, Princeton University Press, Princeton University, Princeton, New Jersey, 1978.

5. Mualem, Y., A New Model for Predicting the Hydraulic Conductivity of Unsaturated Porous Media, *Water Resources Research*, 12(3), 513-522, 1976.

6. Environmental Assessment. Yucca Mountain Site, Nevada Research and Development Area, Nevada, Vol. II, *U.S. Department of Energy*, DOE/RW-0073, May 1986.

7. Montazer, P., and W. E. Wilson, Conceptual Hydrologic Model of Flow in the Unsaturated Zone, Yucca Mountain, Nevada, *U.S. Geological Survey*, Lakewood, CO, WRI 84-4345, 1984.

8. Carroll, M. B., and S. W. Churchill, A Numerical Study of Periodic On-Off Versus Continuous Heating By Conduction. *Numerical Heat Transfer*, vol. 10, pp. 297-310, 1986.

9. Sinnock, S., Lin, Y. T., and J. P. Brannen, Preliminary Bounds on the Expected Postclosure Performance of the Yucca Mountain Repository Site, Southern Nevada, *Sandia National Laboratories*, Albuquerque, NM, SAND84-1492, 1984.

10. Carslaw, H. S. and J. C. Jaeger, *Conduction of Heat in Solids*, Oxford University Press, 1959.

APPENDIX

This report contains no data for inclusion in the RIB and/or SEPDB

A Analytical support

The model used in the 1-D, isothermal cycling calculations is described by Richards equation ($a1$).

$$\frac{\partial^2 P}{\partial x^2} - \frac{1}{C}\frac{\partial P}{\partial t} = 0 \qquad (a1)$$

Similarly, 1-D heat flow is given by equation ($a2$).

$$\frac{\partial^2 T}{\partial x^2} - \frac{1}{\alpha}\frac{\partial T}{\partial t} = 0 \qquad (a2)$$

The similarity variable, η, for the heat transfer model and resulting proportionalities are shown below in equations ($a3 - a5$)[10].

$$\eta = \frac{x}{\sqrt{\alpha t}} \qquad (a3)$$

$$q \propto \frac{x}{\sqrt{\alpha t}} \qquad (a4)$$

$$Q \propto \int_0^{t_c} q dt \propto \sqrt{t_c} \qquad (a5)$$

Then, by analogy, the mass removed over a cycle is also related to the the cycle time.

$$MR_{t_c/t_r} \propto \sqrt{t_c} \qquad (a6)$$

This proportionality will be valid over a number of cycles only if the affected region recovers significantly between cycles and is relatively small compared to the finite domain.

Distribution:

B. C. Rusche (RW-1),Director
Office of Civilian Radioactive
Waste Management
U.S. Department of Energy
Forrestal Building
Washington, DC 20585

V. J. Cassella (RW-22)
Office of Civilian Radioactive
Waste Management
U.S. Department of Energy
Forrestal Building
Washington, DC 20585

Ralph Stein (RW-23)
Office of Geologic Repositories
U.S. Department of Energy
Forrestal Building
Washington, DC 20585

J. J. Fiore (RW-22)
Program Management Division
Office of Geologic Repositories
Forrestal Building
Washington, DC 20585

M. W. Frei (RW-23)
Engineering & Licensing Division
Office of Geologic Repositories
U.S. Department of Energy
Forrestal Building
Washington, DC 20585

E. S. Burton (RW-25)
Siting Division
Office of Geologic Repositories
U.S. Department of Energy
Forrestal Building
Washington, DC 20585

T. P. Longo (RW-25)
Program Management Division
Office of Geologic Repositories
U.S. Department of Energy
Forrestal Building
Washington, DC 20585

Cy Klingsberg (RW-24)
Geosciences and Technology Division
Office of Geologic Repositories
U.S. Department of Energy
Forrestal Building
Washington, DC 20585

B. G. Gale (RW-25)
Siting Division
Office of Geologic Repositories
U.S. Department of Energy
Forrestal Building
Washington, DC 20585

R. J. Blaney (RW-22)
Program Management Division
Office of Geologic Repositories
Forrestal Building
Washington, DC 20585

R. W. Gale (RW-40)
Office of Policy, Integration, and
Outreach
U.S. Department of Energy
Forrestal Building
Washington, DC 20585

J. E. Shaheen (RW-44)
Outreach Programs
Office of Policy, Integration, and
Outreach
U.S. Department of Energy
Forrestal Building
Washington, DC 20585

C. R. Cooley (RW-24)
Geosciences & Technology Division
Office of Geologic Repositories
U.S. Department of Energy
Forrestal Building
Washington, DC 20585

D. C. Newton (RW-23)
Engineering & Licensing Division
Office of Geologic Repositories
U.S. Department of Energy
Forrestal Building
Washington, DC 20585

O. L. Olson, Manager
Basalt Waste Isolation
Project Office
U.S. Department of Energy
Richland Operations Office
Post Office Box 550
Richland, WA 99352

D. L. Vieth, Director (4)
Waste Management Project Office
U.S. Department of Energy
Post Office Box 14100
Las Vegas, NV 89114

P. M. Bodin (12)
Office of Public Affairs
U.S. Department of Energy
Post Office Box 14100
Las Vegas, NV 89114

J. O. Neff, Manager
Salt Repository Project Office
U.S. Department of Energy
505 King Avenue
Columbus, OH 43201

S. A. Mann, Manager
Crystalline Rock Project Office
U.S. Department of Energy
9800 South Cass Avenue
Argonne, IL 60439

K. Street, Jr.
Lawrence Livermore
National Laboratory
Post Office Box 808
Mail Stop L-209
Livermore, CA 94550

L. D. Ramspott (3)
Technical Project Officer for NNWSI
Lawrence Livermore National
Laboratory
P.O. Box 808
Mail Stop L-204
Livermore, CA 94550

D. T. Oakley (4)
Technical Project Officer for NNWSI
Los Alamos National Laboratory
P.O. Box 1663
Mail Stop F-671
Los Alamos, NM 87545

B. W. Church, Director
Health Physics Division
U.S. Department of Energy
Post Office Box 14100
Las Vegas, NV 89114

Chief, Repository Projects Branch
Division of Waste Mangement
U.S. Nuclear Regulatory Commission
Washington, DC 20555

Document Control Center
Division of Waste Management
U.S. Nuclear Regulatory Commission
Washington, DC 20555

D. F. Miller, Director
Office of Public Affairs
U.S. Department of Energy
Post Office Box 14100
Las Vegas, NV 89114

P. T. Prestholt
NRC Site Representative
1050 East Flamingo Road
Suite 319
Las Vegas, NV 89109

M. E. Spaeth
Technical Project Officer for NNWSI
Science Applications
International, Corporation
2769 South Highland Drive
Las Vegas, NV 89109

W. W. Dudley, Jr. (3)
Technical Project Officer for NNWSI
U.S. Geological Survey
Post Office Box 25046
418 Federal Center
Denver, CO 80225

NTS Section Leader
Repository Project Branch
Division of Waste Management
U.S. Nuclear Regulatory Commission
Washington, DC 20555

V. M. Glanzman
U.S. Geological Survey
Post Office Box 25046
913 Federal Center
Denver, CO 80225

W. J. Purcell (RW-20)
Associate Director
Office of Civilian Radioactive
Waste Management
U.S. Department of Energy
Forrestal Building
Washington, DC 20585

J. B. Wright
Technical Project Officer for NNWSI
Westinghouse Electric Corporation
Waste Technology Services Division
Nevada Operations
Post Office Box 708
Mail Stop 703
Mercury, NV 89023

ONWI Library
Battelle Columbus Laboratory
Office of Nuclear Waste Isolation
505 King Avenue
Columbus, OH 43201

SAIC-T&MSS Library (2)
Science Applications
International Corporation
2950 South Highland Drive
Las Vegas, NV 89109

W. S. Twenhofel, Consultant
Science Applications
International, Corporation
820 Estes Street
Lakewood, CO 80215

A. E. Gurrola T. Hay,
General Manager
Energy Support Division
Holmes & Narver, Inc.
Post Office Box 14340
Las Vegas, NV 89114

J. A. Cross, Manager
Las Vegas Branch
Fenix & Scisson, Inc.
Post Office Box 15408
Las Vegas, NV 89114

Neal Duncan
Office of Policy, Integration, and
Outreach
U.S. Department of Energy
Forrestal Building
Washington, DC 20585

John Fordham
Desert Research Institute
Water Resources Center
Post Office Box 60220
Reno, NV 89506

W. M. Hewitt, Program Manager
Roy F. Weston, Inc.
2301 Research Blvd., 3rd Floor
Rockville, MD 20850

H. D. Cunningham
General Manager
Reynolds Electrical &
Engineering Co., Inc.
Post Office Box 14400
Mail Stop 555
Las Vegas, NV 89114

Executive Assistant
Office of the Governor
State of Nevada
Capitol Complex
Carson City, NV 89710

R. R. Loux, Jr., Director (3)
Nevada Agency for Nuclear Projects
Nuclear Waste Project Office
State of Nevada
Capitol Complex
Carson City, NV 89710

C. H. Johnson, Technical
Program Manager
Nevada Agency for Nuclear Projects
Nuclear Waste Project Office
State of Nevada
Capitol Complex
Carson City, NV 89710

Dr. Martin Mifflin
Desert Research Institute
Water Resources Center
Suite 1
2505 Chandler Avenue
Las Vegas, NV 89120

Department of Comprehensive
Planning, Clark County
225 Bridger Avenue, 7th Floor
Las Vegas, NV 89155

Lincoln County Commission
Lincoln County
Post Office Box 90
Pioche, NV 89043

Community Planning and Development
City of North Las Vegas
Post Office Box 4086
North Las Vegas, NV 89030

City Manager
City of Henderson
Henderson, NV 89015

Timothy G. Barbour
Science Applications
International Corporation
1626 Cole Boulevard
Golden, CO 80401

N. A. Norman
Project Manager
Bechtel National Inc.
P.O. Box 3965
San Francisco, CA 94119

Flo Butler
Los Alamos Technical Associates
1650 Trinity Drive
Los Alamos, New Mexico 87544

E. P. Binnall
Field Systems Group Leader
Building 50B/4235
Lawrence Berkeley Laboratory
Berkeley, CA 94720

Planning Department
Nye County
Post Office Box 153
Tonopah, NV 89049

Economic Development Department
City of Las Vegas
400 East Stewart Avenue
Las Vegas, NV 89101

Director of Community Planning
City of Boulder City
Post Office Box 367
Boulder City, NV 89005

Commission of the European
Communities
200 Rue de la Loi
B-1049 Brussels
BELGIUM

Technical Information Center
Roy F. Weston, Inc.
2301 Research Boulevard, 3rd Floor
Rockville, MD 20850

R. Harig
Parsons Brinckerhoff Quade &
Douglas, Inc.
1625 Van Ness Ave.
San Francisco, CA 94109-3678

Dr. Madan M. Singh, President
Engineers International, Inc.
98 East Naperville Road
Westmont, IL 60559-1595

Roger Hart
Itasca Consulting Group, Inc.
P.O. Box 14806
Minneapolis, MN 55414

T. H. Isaacs (RW-22)
Office of Civilian Radioactive
Waste Management
U.S. Department of Energy
Forrestal Building
Washington, DC 20585

D. H. Alexander (RW-23)
Office of Civilian Radioactive
Waste Management
U.S. Department of Energy
Forrestal Building
Washington, DC 20585

B. J. King, Librarian (2)
Basalt Waste Isolation Project
Library
Rockwell Hanford Operations
P.O. Box 800
Richland, WA 99352

David K. Parrish
RE/SPEC Inc.
3815 Eubank, NE
Albuquerque, NM 87191

D. L. Fraser, General Manager
Reynolds Electrical & Engineering
Co., Inc.
Mail Stop 555
P.O. Box 14400
Las Vegas, NV 89114-4400

J. P. Knight (RW-24)
Office of Civilian Radioactive
Waste Management
U.S. Department of Energy
Forrestal Building
Washington, DC 20585

Allen Jelacic (RW-23)
Office of Civilian Radioactive
Waste Management
U.S. Department of Energy
Forrestal Building
Washington, DC 20585

J. R. Rollo
Deputy Assistant Director
for Engineering Geology
U.S. Geological Survey
106 National Center
12201 Sunrise Valley Drive
Reston, VA 22092

R. Lindsay Mundell
U.S. Bureau of Mines
P.O. Box 25086
Building 20
Denver Federal Center
Denver, CO 80225

Vincent Gong
Technical Project Officer for NNWSI
Reynolds Electrical & Engineering
Co., Inc.
Mail Stop 615
P.O. Box 14400
Las Vegas, NV 89114-4400

Gerald Parker (RW-25)
Office of Geologic Repositories
U.S. Department of Energy
Forrestal Building
Washington, DC 20585

J. P. Pedalino
Technical Project Officer for NNWSI
Holmes & Narver, Inc.
Mail Stop 605
P.O. Box 14340
Las Vegas, NV 89114

Eric Anderson
Mountain West Research-Southwest, Inc.
398 South Mill Avenue, Suite 300
Tempe, AZ 85281

Christopher M. St. John
J.F.T. Agapito Associates, Inc.
27520 Hawthorne Blvd., Suite 137
Rolling Hills Estates, CA 90274

S. D. Murphy
Technical Project Officer for NNWSI
Fenix & Scisson, Inc.
Mail Stop 940
P.O. Box 15408
Las Vegas, NV 89114

1510 J. W. Nunziato
1511 D. K. Gartling
1511 N. E. Bixler
1511 R. R. Eaton (3)
1511 P. L. Hopkins (10)
1512 J. C. Cummings
1513 D. W. Larson
1513 C. E. Hickox
1520 C. W. Peterson
1530 L. W. Davison
1550 R. C. Maydew
6300 R. W. Lynch
6310 T. O. Hunter
6310 NNWSICF
6310 72/12141/NQ
6311 L. W. Scully
6311 C. J. Mora
6312 F. W. Bingham
6312 B. S. Langkopf
6312 R. R. Peters
6312 A. Peterson
6312 R. W. Prindle
6312 M. S. Tierney

6312	J. G. Yeager
6313	T. E. Blejwas
6313	E. A. Klavetter
6314	J. R. Tillerson
6314	S. Bauer
6314	J. A. Fernandez
6314	A. J. Mansure
6315	S. Sinnock (10)
6315	P. C. Kaplan
6315	Y. T. Lin
6332	WMT Library (20)
6430	N. R. Ortiz
6431	B. Cranwell
3141	S. A. Landenberger (5)
3151	W. L. Garner (3)
8024	P. W. Dean
3154-1	C. H. Dalin (28) for DOE/TIC

Org.	Bldg.	Name	Rec'd by	Org.	Bldg.	Name	Rec'd by

Sandia National Laboratories