NNWSI-1568

SANDIA REPORT SAND83—1778 • Unlimited Release • UC—70
Printed August 1984

Repository Sealing Concepts for the Nevada Nuclear Waste Storage Investigations Project

Joseph A. Fernandez, Mark D. Freshley

WM DOCKET CONTROL CENTER
'84 NOV 26 A10:41

Prepared by
Sandia National Laboratories
Albuquerque, New Mexico 87185 and Livermore, California 94550
for the United States Department of Energy
under Contract DE-AC04-76DP00789

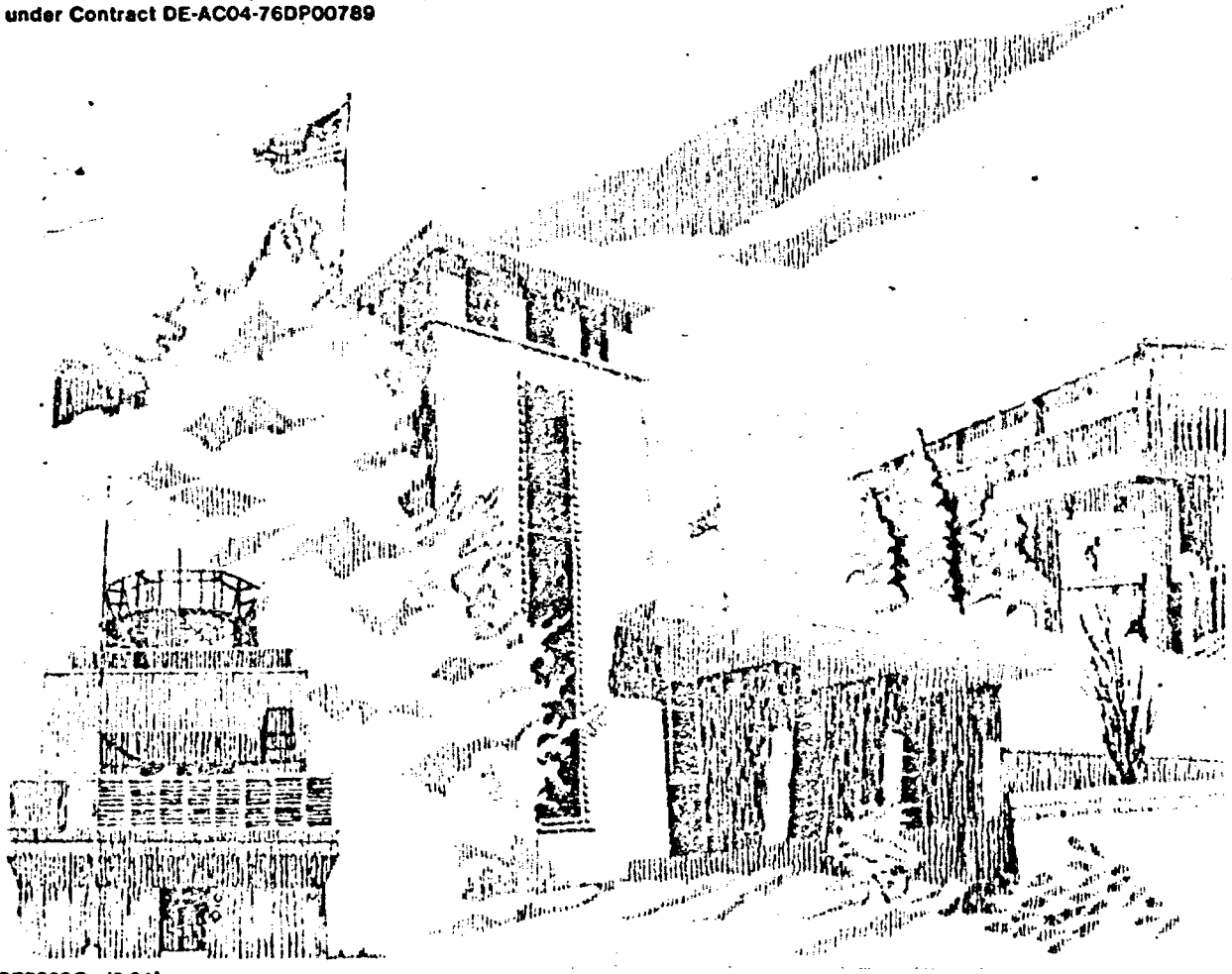

HYDROLOGY DOCUMENT NUMBER 155

SF2900Q (8-81)

SAND83–1778
Unlimited Release
Printed August 1984

Distribution
Category UC–70

Repository Sealing Concepts for the Nevada Nuclear Waste Storage Investigations Project

Joseph A. Fernandez
NNWSI Geotechnical Projects Division 6313
Sandia National Laboratories
Albuquerque, NM 87185

Mark D. Freshley
Pacific Northwest Laboratory
Battelle Memorial Institute
Richland, WA 99352

Abstract

This report describes concepts for sealing a nuclear waste repository in an unsaturated tuff environment. The repository site under consideration is Yucca Mountain, which is on and adjacent to the Nevada Test Site. The hydrogeology of Yucca Mountain, preliminary repository concepts, functional requirements and performance criteria for sealing, federal and state regulations, and hydrological calculations are considered in developing the sealing concepts. Water flow through the unsaturated zone is expected to be small and generally vertically downward with some potential to occur through discrete fault and fracture zones. These assumptions are used in developing sealing concepts for shafts, ramps, and boreholes. Sealing of discrete, water-producing faults and fracture zones encountered in horizontal emplacement holes and in access and emplacement drifts is also described.

Acknowledgments

Special thanks are extended to Joe R. Tillerson, SNL, and F. Harvey Dove, PNL, for their suggestions associated with the concepts or calculations presented in this report. Also greatly appreciated are comments received from numerous other people, including G. Sam Wong, Al Buck, Ken Saucier, and John Boa, WES; Rosemary Vidale, Clarence Duffy and Al Ogard, LASL; Della Roy and Pat Licastro, PSU; Paul O'Brien, Elmer Klavetter, and John Stormont, SNL; Wallace Hammer and F. Don Waltman, F&S; and Glendon Gee and Walter Enderlin, PNL. Thanks are also extended to Ed Clarke, F&S; Jim Robison and Rick Spengler, USGS; and Ken Beall, Jack Jackson, and Clint Shirley, SNL, for providing information used to compile the borehole conditions, geologic information, mine layout, and glossary.

Contents

Executive Summary 7
Introduction 9
Hydrogeology, Boreholes, and Repository Design 11
  Hydrogeologic Setting 11
  Boreholes 11
  Preliminary Design Concepts for a Repository 13
Federal and State Regulations 15
Functional Requirements for Repository Sealing 17
  Description of the Functional Requirements 17
  Relationship Between Federal and State Regulations and the Functional Requirements 17
Performance Criteria for Repository Sealing 23
Calculations Used to Establish the Sealing Concepts 27
  Approach and Input Used for Drift and Shaft Analyses 27
  Results and Conclusions From the Drift Analysis 32
  Results and Conclusions From the Shaft Analysis 34
  Approach and Input Used for the Shaft and Drift Drainage Analyses 35
  Results and Conclusions From the Shaft and Drift Drainage Analyses 37
Repository Sealing Concepts 39
  Shaft Sealing 39
    Surface Barrier 40
    Lower Shaft 40
    Station Plug 41
  Ramp Sealing 42
  Backfilling of Access and Emplacement Drifts 42
  Sealing in the Vicinity of Waste Packages 42
  Options for Sealing a Discrete Fault or Fracture Zone in an Access and Emplacement Drift 44
  Borehole Sealing 47
Conclusions 49
APPENDIX A—Description of the Hydrogeologic Setting 51
APPENDIX B—Borehole Conditions and Associated Geologic Information (August 1983) 55
APPENDIX C—Description of the Preliminary Design Concepts for a Repository 71
APPENDIX D—Federal and State Regulations 73
Glossary 79
References 81

Figures

1 Location of Yucca Mountain 10
2 Location of Boreholes and Proposed Shafts Within and In the Vicinity of a Possible Repository Boundary 12
3 Vertical and Horizontal Waste Emplacement Configurations 13
4 Hypothetical Case Illustrating One Source of Water Flow Into a Shaft 24
5 Geometry for Drift Analysis Assuming Vertical Emplacement of Waste Packages; Moisture Release Curves; and Unsaturated Permeability Relationships Used for Cases 1 Through 4 29
6 Geometry for Shaft Analysis; Moisture Release Curves; and Unsaturated Permeability Relationships Used for Cases 5 Through 8 30

Figures (Cont)

7 Geometry for Shaft Analysis; Moisture Release Curves; and Unsaturated Permeability Relationships Used for Case 9 31
8 Size and Orientation of the Elements in the Vicinity of a Vertically Emplaced Waste Package 32
9 Classical Concept of Free-Surface Flow From a Borehole Above a Deep Water Table 36
10 Infiltration Rate Through the Bottom of the Shaft Using the Glover and Nasberg-Terletskata Equations 37
11 Shaft Sealing Components 39
12 Sealing Concept Proposed for the Surface Barrier 40
13 Sealing Concept Proposed for the Lower Shaft 41
14 Sealing Concept Proposed for the Station Plug 42
15 Sealing Concept Proposed for the Ramp 43
16 Sealing Concepts Proposed for Isolating Discrete, Water-Producing Faults or Fracture Zones in Horizontal Waste Emplacement Holes 43
17 Sealing Concept Proposed for Isolating a Discrete, Water-Producing Fault or Fracture Zone in an Access or Emplacement Drift (First Option) 45
18 Sealing Concept Proposed for Isolating a Discrete, Water-Producing Fault or Fracture Zone in an Access or Emplacement Drift (Second Option) 46
19 Sealing Concept Proposed for Isolating a Discrete, Water-Producing Fault or Fracture Zone in an Access or Emplacement Drift (Third Option) 46
20 Sealing Concept Proposed for Isolating a Discrete, Water-Producing Fault or Fracture Zone in an Access or Emplacement Drift (Fourth Option) 47
21 Sealing Concept Proposed for Borehole Sealing 48

Tables

1 Functional Requirements for Repository Sealing 18
2 Description of the Calculations Used to Evaluate the Sealing Concepts 27
3 Porosity and Saturated Premeability Values Used in the TRUST Calculations 28
4 Computed Flow at the Center of Elements Illustrated in Figure 8 33
5 Volumes of Water Entering a Drift for the Drift Analysis 33
6 Volumes of Water Entering a Shaft for the Shaft Analysis 35

Executive Summary

The Nevada Nuclear Waste Storage Investigations Project, managed by the Nevada Operations Office of the US Department of Energy, is examining the feasibility of siting a repository for commercial high-level nuclear wastes at Yucca Mountain on and adjacent to the Nevada Test Site. A key part of these investigations is sealing of the repository. *Sealing*, as used in this report, refers to all activities associated with the permanent closure of the underground facility, shafts, ramps, and boreholes.

In this report, the sealing concepts for a repository located in the unsaturated zone of the Topopah Spring Member tuff are described. The existing knowledge of Yucca Mountain hydrogeology is reviewed; preliminary repository designs and functional requirements are presented; borehole construction is illustrated; performance criteria are defined; and preliminary hydrologic calculations are summarized.

It is assumed that ground water moves vertically downward through the unsaturated zone at Yucca Mountain. In densely welded, highly fractured tuff, discrete fracture flow is postulated to dominate if the volume of water movement, i.e., the flux, exceeds the capacity of the rock matrix to transmit it. The predominant dip of fractures and faults in densely welded tuff is nearly vertical. In the less fractured, nonwelded tuff, matrix flow is assumed to dominate.

The areas considered for sealing include the underground facility, all penetrations providing access to it, and the exploratory boreholes. The underground facility includes the "underground structure and the rock required for support, including mined openings and backfill materials . . ." (US Department of Energy, 1984a). Two options are considered for disposing of the waste packages in the underground facility—vertical emplacement in shallow, one-canister boreholes and horizontal emplacement in long, multicanister boreholes. The penetrations providing access to the repository include the shafts and ramps tentatively located on the east side of Yucca Mountain. The exploratory boreholes include approximately 25 boreholes in the vicinity of the prospective repository. Those that are shallow, upgradient from the repository boundary, or substantially outside the boundary will receive no further consideration because there appear to be no credible flow mechanisms to transport radionuclides upgradient for long distances. The potential for radionuclide release through the few boreholes that penetrate the repository horizon is considered low because of the small cross-sectional area of the boreholes relative to the repository extent and the anticipated flow mechanisms in the tuff. However, concepts for sealing these boreholes are proposed.

The federal guidelines applicable to the disposal of radioactive wastes are general, but they do provide some guidance in the development of sealing designs. State regulations are more specific but because they were developed considering circumstances associated with oil and gas wells, their applicability to repository sealing is being evaluated.

The sealing functional requirements, containment and isolation, human intrusion, longevity, and cost are presented. The intent of the containment and isolation requirement is to control ground-water flow, where possible, and reduce the quantity that passes the waste package, thereby inhibiting radionuclide transport. The human intrusion requirement addresses radionuclide release through human intrusion, deliberate or inadvertent, and general safety at the entrances of the shafts and inclined ramps. The longevity requirement addresses the concern that the sealing components perform acceptably and with a high degree of confidence through time. The final functional requirement is cost for investigation of sealing component designs, their emplacement, and their evaluation. In the development of the sealing concepts emphasis is placed on the containment and isolation functional requirement.

Performance criteria are established so that one can understand how well the sealing subsystem in Yucca Mountain should perform. Hydrologic calculations are performed to determine the effectiveness of the sealing subsystem with respect to the performance criteria. Additionally, the calculations are used to determine the need for and extent of sealing the underground facility and shafts.

It is concluded, from these calculations and the hydrogeologic information available from Yucca Mountain and Rainier and Pahute Mesas, that from a hydrologic perspective, backfilling a repository in unsaturated tuff is not essential. If backfilling is desired for structural, environmental, or other reasons, a coarse-grained, well-graded material appears to be most satisfactory because of its capacity to drain and act as a capillary barrier. Additionally, quantities of water continuously entering the drifts, shafts, or ramps by matrix or fracture flow are expected to be small enough to allow the natural system to transmit these quantities below the storage horizon, precluding local diversion and concentration.

Sealing concepts are also described. The surface barrier associated with shafts is intended to reduce water entry into the shaft and to prevent surface settlement. Appropriately graded and unreactive fill, such as crushed tuff, settlement plugs, and station plugs, are proposed for the lower portion of the shaft. Sealing of ramps is similar to sealing of shafts with the possible exception of dams positioned at selected intervals. These dams, if emplaced, will divert the flow of water downward through the tuff rather than allowing lateral flow down the ramp. Suggested methods of controlling water flow in the vicinity of horizontally emplaced waste packages are grouting, restricting emplacement of waste packages, and placing seals in the horizontal emplacement holes. Water-producing zones in drifts can be isolated by one of four options: drains or dams (options 1 and 2) to increase the drainage capacity of the drift floor and to control the lateral migration of water in the drift; grouting of the rock above the drift (option 3); and massive seals (option 4) to isolate large flows, if encountered. For those boreholes that may act as potential paths for radionuclide release to the accessible environment, emplacement of a seal in the zone penetrating the Tuffaceous Beds of Calico Hills and emplacement of granular fill, grout, and plugs in the remainder of the hole are suggested.

Repository Sealing Concepts for the Nevada Nuclear Waste Storage Investigations Project

Introduction

The Nevada Nuclear Waste Storage Investigations (NNWSI) Project is comprised of a variety of activities, including waste package design; geologic, geochemical, and hydrologic studies; bulk, mechanical, and thermal rock mass studies; conceptual design of the repository; and repository sealing studies. These activities are focused to determine if Yucca Mountain (Figure 1) is a suitable site for disposing of radioactive wastes. These wastes could include commercial and defense high-level wastes, spent fuel, transuranic wastes, and West Valley high-level waste. The Topopah Spring Member, which is a highly fractured, densely welded tuff in the unsaturated zone, has been selected (Johnstone and Peters, 1984) as the most suitable geologic unit in which to construct a repository in Yucca Mountain.

A key part of the NNWSI Project is sealing the repository. This report provides the first definition of the sealing concepts for a repository at Yucca Mountain. In this report, sealing refers to all activities associated with permanent closure of the underground facility, shafts, ramps, and boreholes. Sealing includes emplacing backfill, seals and plugs, in shafts, ramps, drifts, and boreholes, isolating discrete water zones from waste packages, and emplacing a surface cover and core at the entry points of the shafts and boreholes. Backfilling of waste emplacement holes is considered part of the waste package design and is, therefore, not part of the sealing activity.

Sealing concepts were developed as the first task in accomplishing the ultimate goal of the repository sealing activity, which is permanent closure of the repository in an acceptable manner. To provide a basis for these concepts, performance criteria were also developed. Developing conceptual designs for the repository sealing components is the next step towards achieving this goal.

These designs will be appropriately modified as additional information on the hydrogeology of Yucca Mountain and the engineering design of the repository are received. The designs will be supported by materials development and emplacement feasiblity studies, numerical analysis of the unsaturated hydrology, and field tests. These activities will be defined in a program plan that describes the work needed to resolve sealing issues.

This report includes the following information that was used to develop the concepts for sealing a repository in unsaturated tuff:

- Descriptions of existing boreholes and associated geology
- A summary of the current understanding of the geology and hydrology of Yucca Mountain
- A preliminary conceptual layout of the repository
- Federal and state criteria, guidelines, and standards
- Functional requirements and performance criteria for sealing the repository
- Hydrologic calculations

Further, this report furnishes preliminary guidance for sealing the proposed repository in Yucca Mountain and provides the concepts that form the basis for the conceptual design of sealing components. Sealing concepts are described for shafts, ramps, boreholes, and discrete, water-producing fault and fracture zones.

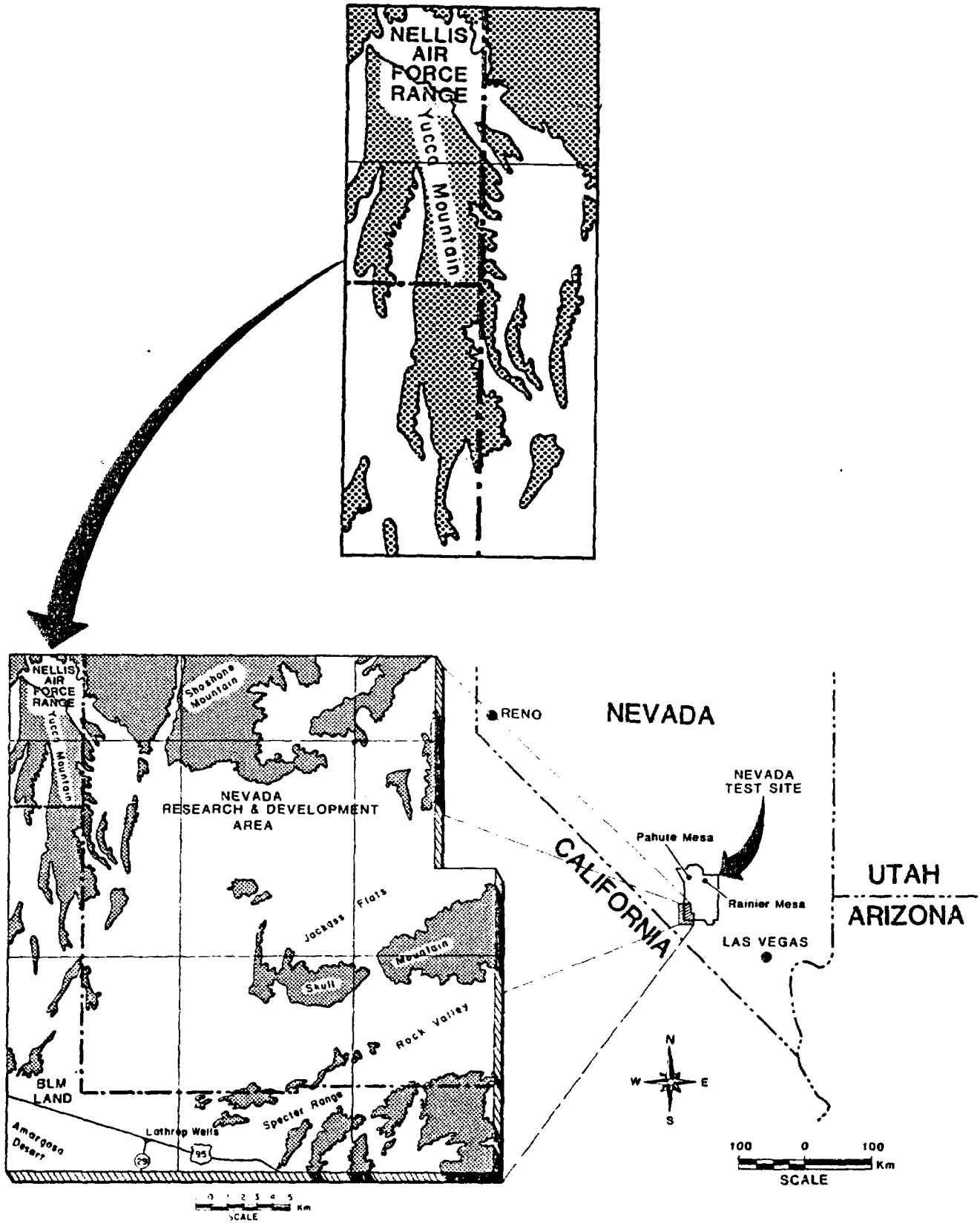

Figure 1. Location of Yucca Mountain

Hydrogeology, Boreholes, and Repository Design

A necessary step in the development of designs for seals, plugs, and backfill is the description of the hydrogeology and the identification of modifications to the hydrogeology from exploration and construction activities. Brief descriptions of the hydrogeology, borehole construction, and repository design concepts are provided below and in Appendixes A, B, and C. More extensive descriptions of the geology and hydrology are given elsewhere (Thordarson, 1965 and 1983; Ekren, 1968; Winograd and Thordarson, 1975; Scott et al, 1983; Sinnock, 1983; and Rush et al, 1983). The NNWSI Project environmental assessment (US Department of Energy, 1984b) provides a current description of the hydrogeology. Further, it is recognized that the flux used in hydrologic calculations in this report is greater than that used in the environment assessment . However, the use of a lower flux would not be expected to result in conclusions, related to sealing, that are different from those reached in this report.

Hydrogeologic Setting

Field evidence from Rainier Mesa (Thordarson, 1965), throughout the NTS (Winograd and Thordarson, 1975), and Yucca Mountain (Spengler et al, 1979 and 1981, and Rush et al, 1983) illustrating water flow in volcanic rocks is given to substantiate the likely mechanisms for water flow in Yucca Mountain. In using field observations not directly associated with Yucca Mountain, it is assumed that similar rock types subjected to similar post-depositional environments exhibit similar hydrologic behavior.

A generalized stratigraphy is provided in Appendix A for reference. The Tiva Canyon and Topopah Spring Members, which are predominantly densely welded, highly fractured tuffs, have high effective hydraulic conductivities due primarily to fracture patterns (10^{-3} cm/s for the Topopah Spring Member, from Thordarson, 1983). Saturated, matrix hydraulic conductivities of the welded tuff samples are low, ranging from 10^{-8} to 10^{-12} cm/s (Blair et al, 1984). The Tuffaceous Beds of Calico Hills, the nonwelded base of the Topopah Spring Member, and various zeolitized and argillized bedded tuffs are characterized in most places by lower, effective hydraulic conductivities. Between and below the Tiva Canyon and Topopah Spring Members, the bedded tuff and the nonwelded to partially welded, nonzeolitized ash-flow tuffs have relatively high, saturated matrix hydraulic conductivities ranging from 10^{-4} to 10^{-8} cm/s (Blair et al, 1984).

It is assumed in developing the sealing concepts that:

- A predominantly vertical downward gradient in the unsaturated zone is the driving mechanism for ground-water flow and transport of radionuclides.
- Lateral flow is possible where there are contrasts in permeability or pore size between geologic rock types, particularly at nonwelded and welded tuff interfaces.
- Flow in discrete fault and fracture zones is a potential flow mechanism in the Topopah Spring Member because the matrix permeabilities are extremely low.
- Because a repository is proposed within the densely welded, highly fractured Topopah Spring Member, vertical flow in the matrix or fractures is expected to dominate and lateral flow is expected to be minimal in the immediate vicinity of the repository horizon.

Because these assumptions influence the development of the sealing concepts, they will be thoroughly evaluated as additional hydrogeologic information is obtained.

Boreholes

Locations of 25 small-diameter, exploratory boreholes and five shafts are shown in Figure 2. Detailed information on the boreholes is given in Table B1, Appendix B. Most of these penetrations are at the periphery of a possible repository boundary.

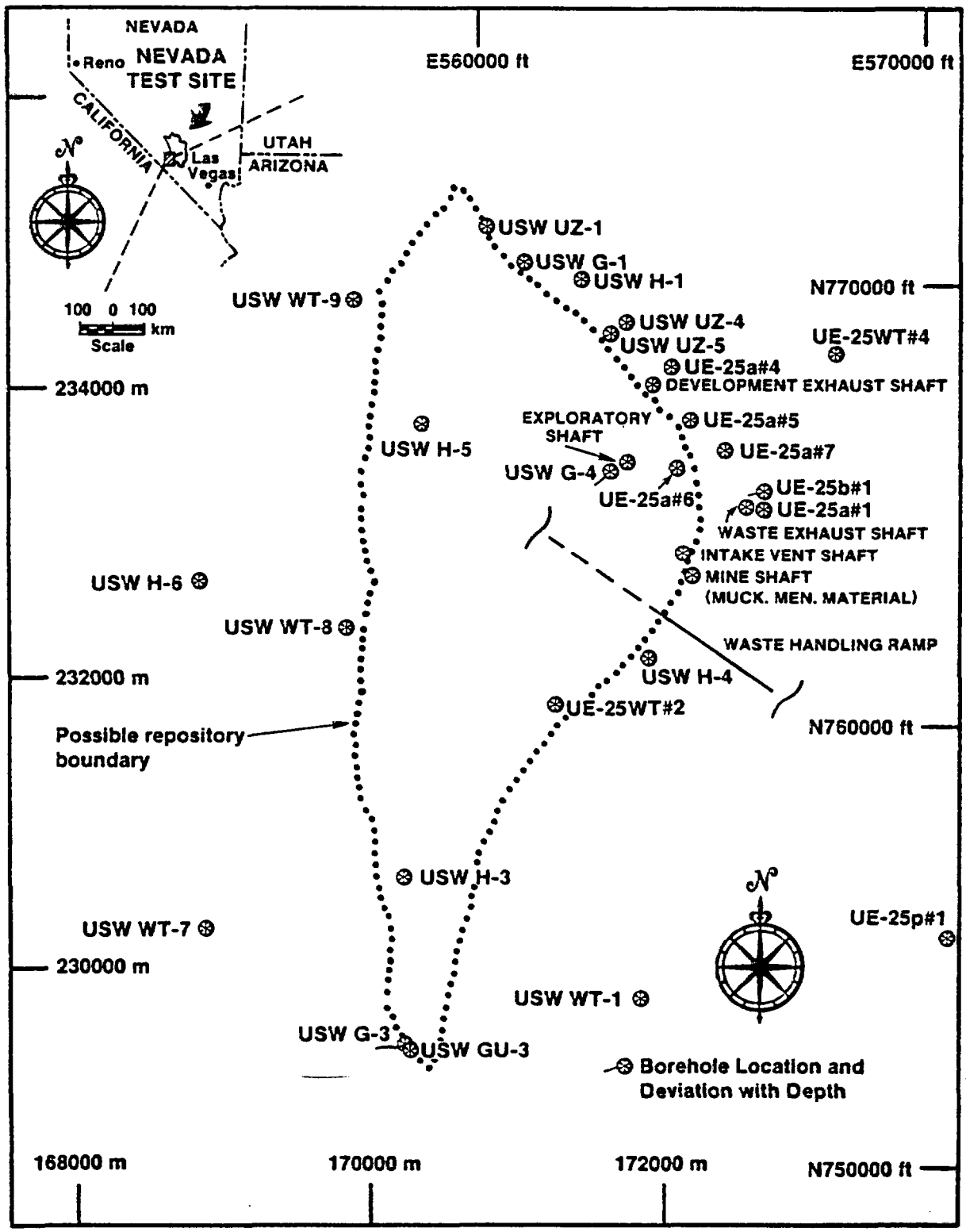

Figure 2. Location of Boreholes and Proposed Shafts Within and In the Vicinity of a Possible Repository Boundary

Appendix B also contains information on the existing conditions and available geologic information from the boreholes. The existing conditions and general stratigraphic logs are plotted adjacent to each other at the same vertical scale to permit a rapid comparison between the presence of casing, unusual hole conditions, and specific stratigraphic units. No adjustments are made to correct for the deviation of wells from vertical, although well deviations are given in Table B1. The hole conditions are graphically illustrated from the well information compiled by Fenix & Scisson, Inc. and included in hole history data sheets for specific wells. The information in Appendix B pertinent to sealing includes

- Size and location of casing
- Types and volumes of grouts used to set the casing
- Unusual conditions encountered in boreholes, including sloughing or enlargement of holes and hardware lost in the holes
- Occurrence of drilling fluid loss

Information on borehole conditions is supplemented by information contained in geologic reports.

The information presented in Appendix B is compiled from published and unpublished reports and personal communications. Contacts of major stratigraphic units are identified along with information on degree of welding, mode of emplacement (such as ash-fall or ash-flow origin), and post-depositional alteration (such as devitrification or reworking of tuffs). Also, any information on the sloughing of the hole and hydrologic conditions is noted.

The purpose of the borehole generally determines the depth of the hole. For example, water-table (WT) holes are drilled approximately 50 m into the water table with the primary intent of locating the potentiometric surface in the vicinity of Yucca Mountain. The unsaturated zone (UZ) holes are drilled to obtain information on the hydrologic conditions in the unsaturated zone and are intended to come within 30 m of the water table. Hydrology (H) and geology (G) holes are generally drilled into the saturated zone to assess the distribution and nature of stratigraphic units and structural discontinuities and to permit geophysical and hydrologic measurements.

Preliminary Design Concepts for a Repository

The design concepts for a prospective repository described in this section are preliminary and subject to change. A more complete description of the repository concepts is under preparation (Jackson, 1984).

The underground facility and the access shafts and ramps are important from a sealing perspective. Designs of the underground facility depend on the manner in which the waste packages are emplaced. Two options currently considered for disposing of waste packages are vertical emplacement in shallow, one-canister boreholes and horizontal emplacement in long, multicanister boreholes (Figure 3). Significant differences in volumes of material mined and drilling requirements occur between these options. For example, depending on the heat loading of the waste packages, the extraction ratio for the underground facility is about 6% for horizontal emplacement and about 24% for vertical emplacement (Dravo Engineers Inc., 1984). Because of the different ventilation requirements, the diameter of shafts used for the horizontal emplacement option is 60% to 90% of the shaft diameter used for the vertical emplacement option (Dravo Engineers Inc., 1984). As a result, the volumetric requirements of backfill may vary substantially between the emplacement options.

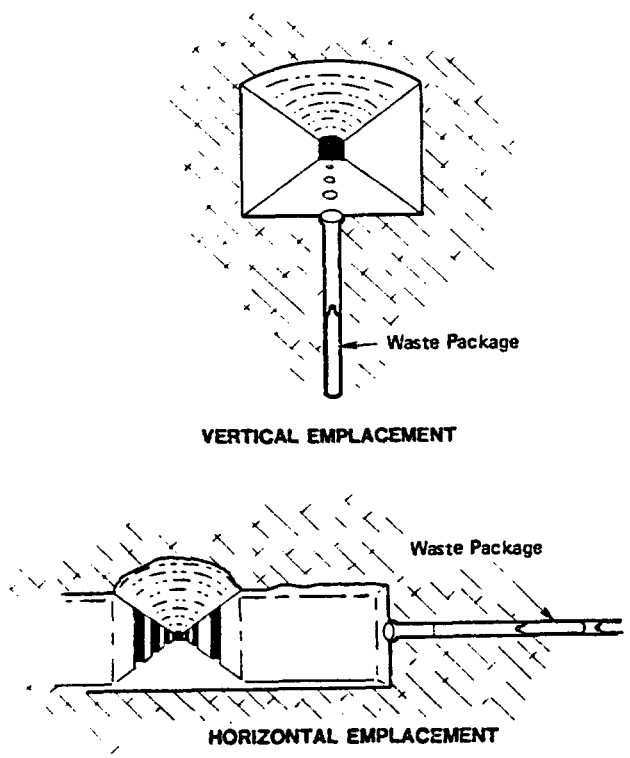

Figure 3. Vertical and Horizontal Waste Emplacement Configurations

The spatial extent of the repository is illustrated by the possible repository boundary shown in Figure 2. The boundaries in the figure are based on the assumption that the repository would be located in the central structural block. However, there is no requirement that the repository be confined to a single structural block (Mansure and Ortiz, 1984). Further, design studies and geologic investigations will ultimately determine the configuration and extent of underground workings.

The repository boundary used in current design layouts is formed from the intersection of (1) a plane dipping 5° downward to the east and 1° downward to the north and (2) the surface generated by connecting the extent of the repository if placed at the base of the Bullfrog Member and the repository extent at the surface. Two additional criteria reflected in the repository boundary are an overburden thickness of at least 200 m and a lithophysae content of the Topopah Spring Member of less than 15%. This boundary is used to determine the relationship of the repository limit to the vertical penetrations. Ongoing system studies which are part of the repository cnceptual design activities, will be used to modify the limits of the repository. A more detailed description of the preliminary repository concepts is provided in Appendix C.

Federal and State Regulations

Regulations for sealing underground openings have been developed to assist in the identification of an acceptable site for the geologic disposal of high-level radioactive wastes. Appendix D contains sections pertinent to repository sealing that have been excerpted from various federal and state regulations.

Draft guidelines developed by the US Department of Energy (DOE), 1984a, include consideration of repository sealing. Section 960.4-1 states that the site for the geologic repository shall keep the releases of radioactive materials within the limits specified in 40 CFR 191, Subpart B. Section 960.4.2-8 states that the surface portions of a sealing system should be designed to preclude human interference.

The environmental standards proposed by the US Environmental Protection Agency (EPA), 1982, specify the amount of radionuclides that may enter the accessible environment for 10,000 years after closure of the repository. Because these standards apply to the overall performance of the geologic repository, only qualitative requirements are available for sealing (§191.14b and c).

The technical criteria provided by the US Nuclear Regulatory Commission (NRC), 1983, are the most comprehensive of the federal regulations/guidelines with respect to sealing a repository but they do not specifically address sealing in the unsaturated zone. The technical criteria in 10 CFR 60, incorporates the multibarrier philosophy. Part of this philosophy includes the engineered barriers.

The most important criterion for the design of engineered barriers is one that requires containment and isolation of radionuclides (§60.133a and h). For the design of seals for shafts and boreholes, the most important criterion is one that prohibits their being "pathways that compromise the geologic repository's ability to meet the performance objectives [f]or the period following permanent closure" (§60.134a). An additional design consideration is the retrievability of waste (§ 60.111). Because the waste retrievability option must be maintained, backfilling operations should be planned to accommodate this option.

Other regulations that may apply to the sealing of boreholes or the abandonment of underground openings are

- The federal guidelines (43 CFR 3800, Subpart 3809) relating to the surface management of public lands from mining operations (US Bureau of Land Management (BLM), 1980)
- The state rules and regulations relating to the plugging of abandoned wells (Nevada Department of Conservation and Natural Resources, 1979 and 1981).

The primary objectives of the 43 CFR 3800, Subpart 3809, Surface Management are to assure that unnecessary and undue degradation of federal lands is prevented, nonmineral resources are protected, and disturbed areas are reclaimed. Section 3809.3.5, which pertains to marking of hazardous surface conditions, such as those which may exist from an open shaft, may apply to repository sealing.

The Nevada Department of Conservation and Natural Resources has adopted regulations for plugging abandoned oil, gas, and water wells. However, because these regulations were developed for conditions different from those encountered in the boreholes at Yucca Mountain, they probably do not directly apply.

Functional Requirements for Repository Sealing

Four major functional requirements (containment and isolation, human intrusion, longevity, and cost) are proposed to assist in the development of designs for sealing components. Additional requirements that indicate possible ways to accomplish these major functional requirements are also presented. The functional requirements illustrate the logic that should be considered in developing the designs for the sealing components. In developing the sealing concepts, emphasis is placed on the containment and isolation requirement. Once specific design requirements for the sealing components are defined, through continuing analyses, the longevity and cost requirements can be considered through design trade-off studies.

Description of the Functional Requirements

In developing the functional requirements for sealing (Table 1), it is assumed that radionuclides are transported through the geologic system and to the accessible environment by ground-water flow. If ground-water flow can be inhibited or controlled, the potential for radionuclide transport can be reduced.

Requirement 1, Containment and Isolation, addresses this concern. It is the intent of Requirement 1.1 to preclude ground water from reaching the waste package by (1) preventing water from entering the underground facility through vertical shafts, ramps, or other vertical or horizontal penetrations, and (2) if water does enter into the vicinity of the waste package, diverting the ground water around the waste package. If radionuclides should enter the ground-water system, it would be desirable to retain radionuclides in the geologic system (Requirement 1.2) by retarding flow and sorbing radionuclides downgradient from the waste package. Because of the predominant vertical gradient in the unsaturated zone, it is not anticipated that radionuclides contained in ground water could reenter drifts. Therefore the requirements to absorb radionuclides and retard flow downgradient from the waste package have limited applicability.

Requirement 2, Human Intrusion, addresses radionuclide release through human intrusion, either deliberate or inadvertent. This objective can be achieved by closing all large openings, shafts, and ramps, in a manner that would deter reentry. Small openings, such as exploratory boreholes, are not expected to present a safety hazard because seals acceptable by today's standards sufficiently deter reentry of the wells.

Requirement 3, Longevity, addresses the concern that sealing components perform acceptably and with a high degree of confidence over a required period. Their long-term performance may include a progressive but acceptable deterioration with time. An increase in confidence can be achieved by (1) properly designing sealing components to static and dynamic loadings (Requirement 3.1), (2) reducing the uncertainties associated with material properties and emplacement techniques (Requirement 3.2), and (3) selecting different materials and designs serving the same or overlapping functions (Requirement 3.3). The need for redundancy in seal functions will be determined through engineering analyses.

Requirement 4, Cost, must also be considered for investigating seal materials and their emplacement. When possible, complex designs and materials should be avoided because increased design, emplacement, and performance verification efforts may be required. Implicit in the verification requirements is the possibility for additional laboratory and field testing for more complex designs.

Relationship Between Federal and State Regulations and the Functional Requirements

A correlation between federal and state regulations and the functional requirements is made in Table 1 to show that the functional requirements address federal and state regulations. The criteria developed specifically for radioactive waste disposal are general and therefore can be correlated to many of the functional requirements. This repetition is particularly true for the EPA Standard, §191.14b, which suggests that engineered barriers be designed to limit radionuclide releases to acceptable levels considering technical, social, and economic factors.

Table 1. Functional Requirements for Repository Sealing

	Functional Requirement	Regulations				
		NRC (§)	EPA (§)	DOE (§)	Nevada	BLM (§)
1.	**Containment and Isolation**— Reduce the potential for radionuclide release					
1.1.	Reduce the amount of ground water which will contact the waste package					
1.1.1	Prevent ground water from entering emplacement drift via shafts or ramps	60.112 60.133a&h	191.14b	960.4-1		
1.1.2	Divert ground water away from waste package	60.112 60.133a&h	191.14b	960.4-1		
1.2	Retain radionuclides in the geologic system					
1.2.1	Seal off discharge pathways to preclude a more rapid transit time to the accessible environment	60.112 60.133a&h 60.134a&b	191.14b	960.4-1	14.01 301	
1.2.2	Sorb radionuclides downgradient from the waste package	60.112 60.133a&h	191.14b	960.4-1		
1.2.3	Retard flow downgradient from the waste package to optimize contact with sorbing material	60.112 60.133a&h	191.14b	960.4-1		

Table 1. Continued

	Functional Requirement	Regulations NRC (§)	EPA (§)	DOE (§)	Nevada	BLM (§)
2.	**Human Intrusion**—Reduce the potential for radionuclide release by discouraging human intrusion					
2.1	Discourage deliberate human intrusion into the repository by adequate closure of surface access point					
2.1.1	Seal large-diameter access openings, i.e., shaft collars and the portals of ramped entries, adequately to deter reentry	60.112 60.133a&h	191.14b 191.15	960.4-2-8 960.4-1		
2.1.2	Seal small-diameter openings, i.e., exploratory boreholes, adequately to deter reentry	60.112 60.133a&h	191.14b 191.15	960.4-2-8 960.4-1	302	
2.2	Discourage accidental human intrusion into the repository by adequate closure of surface access points					
2.2.1	Seal the shaft collar, ramped entries, and exploratory boreholes in a manner which will not present an attractive nuisance	60.112 60.133a&h	191.14b 191.15	960.4-2-8 960.4-1	302	3809.3.5
2.2.2	Design adequate warnings on all access openings illustrating nature and purpose of the openings	60.112 60.133a&h	191.14b 191.15	960.4-2-8 960.4-1	302	3809.3.5

Table 1. Continued

Functional Requirement	Regulations				
	NRC (§)	EPA (§)	DOE (§)	Nevada	BLM (§)
3. Longevity—Increase the confidence that sealing components will perform acceptably for the specified time					
3.1 Mitigate failures of sealing components					
3.1.1 Mitigate seal failures induced by static loading	60.112 60.133h	191.14b	960.4-1		
3.1.2 Mitigate seal failures induced by dynamic loading	60.112 60.133h	191.14b	960.4-1		
3.2 Reduce uncertainties associated with material properties and emplacement techniques					
3.2.1 Select seal materials with documented behavior and performance and which are well understood	60.134h	191.14b	960.4-1	14.02.1,2,3	
3.2.2 Select a material which is readily and easily emplaced with assurance of high quality	60.134h	191.14b	960-4-1	14.02.1,2,3	
3.3 Enhance reliability of the emplaced sealing component					
3.3.1 Select simple designs and materials		191.14b&c	960.4-1		
3.3.2 Provide redundancy in sealing functions		191.14b&c	960.4-1		

Table 1. Continued

Functional Requirement	Regulations				
	NRC (§)	EPA (§)	DOE (§)	Nevada	BLM (§)
4. Cost—Reduce the overall cost for the design, emplacement, and performance verification of sealing components					
4.1 Reduce the design and emplacement costs of materials, designs, and emplacement methods					
4.1.1 Select simple designs and materials		191.14b	960.4-1	14.02.1,2,3	
4.1.2 Select materials that are currently emplaceable by considering the initial cost, maintenance and development cost for the emplacement equipment		191.14b	960.4-1	14.02.1,2,3	
4.2 Reduce the cost associated with the verification of sealing components					
4.2.1 Select materials and designs that will require a minimum of laboratory analyses		191.14b	960.4-1		
4.2.2 Select materials and designs that will require a minimum of field testing		191.14b	960.4-1		

As was suggested earlier, the NRC criteria are more closely related to the functional requirements than any other regulations. The rules and regulations from the Nevada Department of Conservation and Natural Resources are much more specific and suggest use of available materials and proven emplacement technology and designs. However, although a tentative correlation is made in Table 1 between these rules and regulations and the functional requirements, their applicability is limited. The BLM rules apply only to the closing of entry points of large openings.

Performance Criteria for Repository Sealing

Before the sealing concepts can be developed, it is necessary not only to review applicable regulations and the functional requirements, but also to identify performance criteria. The performance criteria are established to understand how well the sealing subsystem in Yucca Mountain should perform. The final performance criteria for sealing will be based on the performance assessment of the entire repository. We have chosen to develop these concepts by defining performance criteria used in developing the sealing concepts independently of the performance of other portions of the repository.

The bases for the performance criteria are the preliminary repository design, the anticipated hydrogeologic conditions, and the functional requirements. The repository design, including orientations and geometries, is needed to identify the areas that may require sealing. The current understanding of the hydrogeology is needed to determine potential water flows entering the repository or boreholes.

Because of the preliminary nature of the repository design and the evolving understanding of the unsaturated zone hydrology at Yucca Mountain, the performance criteria will be refined as information is obtained through the site characterization and additional performance assessments. The exploratory shaft investigations, for example, will provide a better understanding of the volumes and nature of water flow in the unsaturated zone.

The following performance criteria are used in developing the sealing concepts:

Water Flow Into a Shaft—Because it is conceivable that water could accumulate in the shaft and then migrate laterally to the waste storage areas, it is first necessary to define an amount of water which could potentially enter the shaft. This quantity of water could then be used to determine the potential for accumulation of water at the base of the shaft and thereby the potential for lateral flow. Potential water flow into a shaft located in the unsaturated zone, although perhaps very low, is, therfore, established as the basis upon which the desired drainage capability of the shaft will be evaluated.

Several water sources were considered in developing the performance criteria for water flow into a shaft. These included multiple, discrete, water-producing fault or fracture zones intersecting the shaft at various angles; a perched water system overlying the Topopah Spring Member and penetrated by a shaft; and transport of all precipitation, falling within various radii of the shaft center, to the bottom of the shaft. Because no unequivocal evidence exists that indicates a perched water system above the Topopah Spring Member, this source of water was not used in computing the flow into the shaft. However, a combination of recharge through a fracture system intersecting the shaft and transport of all precipitation falling within a surface collapse structure caused by settlement of shaft fill was used to compute the water flow into the shaft. This quantity was computed as follows. First, it is assumed that all of the recharge flux (2% of the precipitation) within a radius of influence defined by a fracture system is focused into the shaft (Figure 4). Second, it is assumed that all of the precipitation that falls into the depression caused by shaft-fill settlement will percolate to the bottom of the shaft. These values are computed as follows: (1) The recharge flux is assumed to be 4 mm/yr and to occur through a fault/fracture system dipping 73° (the average dip for faults in wells USW-GU3 and USW-G3) and intercepted by a 370-m-deep shaft (Figure 4). The hypothetical flow from this source is computed to be 79 m^3/yr (57 gpd). (2) To compute a value for percolation of precipitation into a shaft, it is assumed that settlement of the shaft fill is 7%, which is the upper range given for lower quality fill (National Coal Board, 1982). Infilling then occurs by the alluvial cover and forms a depression. The precipitation falling within the depressions created by the settlement of fill in and around the 3.1-m and 6.7-m diameter shafts would be 22 m^3/yr (16 gpd) and 68 m^3/yr (50 gpd), respectively.

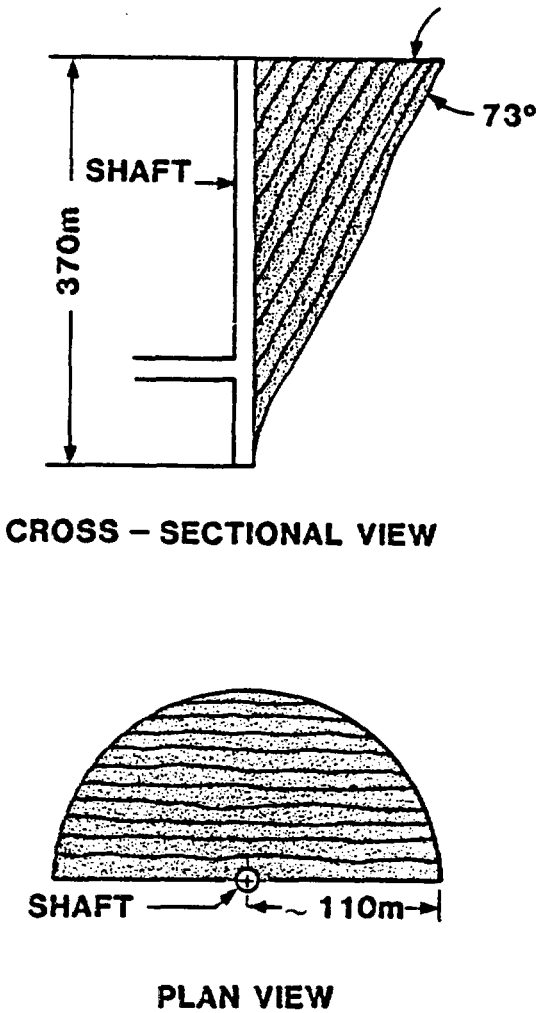

Figure 4. Hypothetical Case Illustrating One Source of Water Flow Into a Shaft. (Shading represents flow intercepted by the shaft)

Combining the values from both sources gives totals of about 100 m^3/yr (70 gpd) and 150 m^3/yr (110 gpd) that should be dissipated at the base of the 3.1-m and 6.7-m shafts, respectively.

Settlement of Shaft Fill—In arriving at performance criteria for the settlement of shaft fill, it was arbitrarily decided to restrict total settlement to a value similar to the thickness of the alluvial cover. For a shaft constructed in Yucca Mountain, this corresponds to a settlement value of 1% to 2%.

Discrete, Water-Producing Zones in Drifts and Ramps—As discussed earlier, flow may occur in discrete fault and fracture zones in the Topopah Spring Member. Developing concepts to control water that may contact the waste package is therefore desirable. Because of the limited information available on volumes of flow in discrete fault and fracture zones, an attempt to quantify this volume is made using experience available from the tunnel complexes in Rainier Mesa. It is recognized that differences exist in the geology between Rainier Mesa and Yucca Mountain, and therefore, differences may also exist in the hydrology. For the purpose of arriving at a performance criterion, it is assumed that some similarity exists.

Thordarson (1965) observed that tunnels in Rainier Mesa that yielded the most perched ground water were those penetrating into zeolitic-bedded tuff. Spot observations by Thordarson indicated that discharge from faults in other tunnel complexes was only a fraction of that occuring in the U12e tunnel complex, which is constructed largely through zeolitic-bedded tuff. It was further noted by Clebsch (1960) that discharge from tunnels penetrating individual fractures could be characterized by a maximum initial discharge, followed by decreasing discharge until the fractures were completely drained within weeks or months. A cumulative discharge curve for the U12e tunnel illustrated a drop of greater than one order of magnitude in discharge over approximately one month.

The information presented by Thordarson and Clebsch is consistent with the observation of a fault zone in G-Tunnel that produces approximately 100 gallons per week. Considering this information, the performance criterion for a water-producing fault or fracture zone in a drift or a ramp is assumed to be 0.057 m^3/day (15 gpd). The development of this performance criterion suggests that the concept selected should effectively drain this volume of water through the floor of the drift or divert inflow away from the drift. It is further recognized that the range of discharges from faults may vary considerably and that concepts accounting for much higher discharges should also be proposed.

Discrete, Water-Producing Zones in Horizontal Emplacement Holes—Diversion of ground water away from the waste packages is desirable to reduce the potential for radionuclide release. Therefore, establishing a performance criterion for water flow in the immediate vicinity of the waste package was considered appropriate. For water-producing zones encountered in horizontal-emplacement holes, inflow that should be diverted is assumed to be 25% of the amount assumed for drift inflow, or 0.014 m^3/day (3.8 gpd). This reduction is assumed because of the smaller effective area contributing to flow into the emplacement hole.

Drift Backfill—Drift backfill should be emplaced for hydrologic reasons if flow past the waste package can be significantly influenced.

Borehole Seal—Sealing of potential discharge pathways is desirable to ensure that these pathways do not compromise the ability of the geologic repository system in meeting the overall system performance objective. Boreholes penetrating through the storage horizon, the Tuffaceous Beds of Calico Hills, and into the ground-water table represent potential discharge pathways. Two flow conditions are assumed in establishing the conditions that could lead to release of radionuclides preferentially through boreholes. These flow conditions include vertically downward movement of water to an interface zone. At this interface zone, lateral flow is assumed to dominate (although no unequivocal evidence of perched water systems exists above the Tuffaceous Beds of Calico Hills) and may be intercepted by the borehole. In developing this performance criterion it is assumed that restoration of the Calico Hills unit is desirable to avoid preferential flow of radionuclides through the boreholes.

To discourage flow through the borehole as described above, a performance criterion for the borehole seal in the Calico Hills unit is recommended. This seal should maintain an effective hydraulic conductivity that is less than or equal to the effective hydraulic conductivity of the Calico Hills unit. It is recognized that this is a potentially over-conservative criterion, and additional evaluations will be performed to see if a criterion of travel time is more appropriate.

Now that the performance criteria that identify how well the sealing subsystem should perform have been defined, the numerical calculations in the following chapter will address how effective the sealing subsystem performs with respect to the performance criteria.

Calculations Used to Establish the Sealing Concepts

Hydrological calculations were used (1) to evaluate the effectiveness of the Topopah Spring Member to dissipate waters entering shafts and drifts and (2) to assess the need for and extent of sealing the underground facility, shafts, and boreholes. Four analyses were conducted.

- A drift with vertical emplacement of waste packages to determine water flow near the waste package and through the drift (drift analysis)
- A shaft penetrating a slightly inclined contact between a welded and nonwelded tuff to determine water flow into the shaft (shaft analysis)
- A shaft functioning as a drain to determine potential water flow out of the bottom of a shaft (shaft drainage analysis)
- A drift floor functioning as a drain to determine the potential water flow through the drift floor (drift drainage analysis).

To evaluate these analyses, 11 cases, summarized in Table 2, are investigated. Cases 1 through 4 investigate the configurations of the horizontal and vertical emplacement of waste packages (drift analysis). Cases 5 through 9 address the shaft configuration (shaft analysis). Cases 10 and 11 investigate the ability of the lower shaft and the drift floor to dissipate water entering these portions of the repository (shaft and drift drainage analyses). The approaches and inputs used in the numerical simulations are summarized in the following sections.

Approach and Input Used for Drift and Shaft Analyses

TRUST (Reisenauer et al, 1982), an integrated, finite-difference code for unsaturated ground-water flow, was used for the drift and shaft analyses (Cases 1 through 9). For these analyses, sand and clay were selected as the backfill materials. These materials were chosen to determine the differences in water movement past waste packages, through the repository drift, and into the shaft.

The following major assumptions were made for these analyses:

- The hydraulic gradient was vertically downward
- Porous, matrix flow, or flow as a continuum, was assumed
- Steady-state results were used to analyze the need for and the extent of sealing
- Isothermal conditions prevailed

Additional discussions on the approach, input, and assumptions used are given elsewhere (Freshley et al, 1984).

Table 2. Description of the Calculations Used to Evaluate the Sealing Concepts

Case No.	Description
1	Vertical emplacement of waste packages—drift located in welded tuff (Sample 19)* and backfilled with clay
2	Vertical emplacement of waste packages—drift located in welded tuff (Sample 19) and backfilled with sand
3	Vertical emplacement of waste packages—drift located in welded tuff (Sample 19, k_s increased) and backfilled with clay
4	Vertical emplacement of waste packages—drift located in welded tuff (Sample 19, k_s decreased) and backfilled with clay
5	Stratigraphic contact between welded tuff (Sample 4) overlying nonwelded tuff (Sample 17) intersected by a shaft backfilled with clay
6	Stratigraphic contact between welded tuff (Sample 4) overlying nonwelded tuff (Sample 17) intersected by a shaft backfilled with sand
7	Stratigraphic contact between nonwelded tuff (Sample 17) overlying welded tuff (Sample 4) intersected by a shaft backfilled with clay
8	Stratigraphic contact between nonwelded tuff (Sample 17) overlying welded tuff (Sample 4) intersected by a shaft backfilled with sand
9	Stratigraphic contact between welded tuff (Sample 4, k_s increased) overlying nonwelded tuff (Sample 14, k_s decreased) intersected by a shaft backfilled with clay (k_s decreased)
10	Lower shaft drainage in a welded tuff
11	Drift floor drainage in a welded tuff

*See Table 3.

The porosity and saturated permeability values used in the TRUST calculations are given in Table 3. The moisture release and unsaturated permeability curves are illustrated in Figures 5 through 7, along with a diagram depicting the geometry of the cases modeled.

The hydraulic properties for tuff samples were determined from core taken from well USW GU-3. The hydraulic properties for sand (Crab Creek Sand) and clay (Chino Clay) were taken from the literature (Maulem, 1976). The difference between the moisture content versus pressure head curves developed for sand and clay represented the range of hydrologic response anticipated from materials that could be used to backfill drifts or shafts.

The boundary conditions were specified such that vertical boundaries were no-flow and the horizontal boundaries were either constant flux or constant hydraulic head. These conditions establish the predominant hydraulic gradient as vertical, which was assumed to be reasonable for Yucca Mountain (Sass and Lachenbruch, 1982) and for thick unsaturated zones of arid regions (Winograd, 1981). The upper boundary condition was modeled as constant flux equivalent to 4 mm/yr, whereas the lower boundary condition was modeled as constant hydraulic head. Additionally, the saturated hydraulic conductivity of the rock matrix was selected to be high enough to pass 4 mm/yr.

Table 3. Porosity and Saturated Permeability Values Used in the TRUST Calculations

Materials	Used in Cases	Porosity	Saturated Permeability (m^2)
Clay[1]	1, 3, 4, 5, 7	0.532	3.9×10^{-16}
Sand[1]	2, 6, 8	0.371	1.9×10^{-13}
Clay[1] (k_s[2] decreased)	9	0.532	1.4×10^{-17}
Sample 4[3]	5, 6, 7, 8	0.053	4.9×10^{-16}
Sample 4 (k_s increased)	9	0.200	8.5×10^{-15}
Sample 14[3,4] (k_s decreased)	9	0.270	1.3×10^{-17}
Sample 17[3]	5, 6, 7, 8	0.346	7.1×10^{-16}
Sample 19[3]	1, 2	0.221	1.2×10^{-16}
Sample 19 (k_s increased)	3	0.221	1.2×10^{-14}
Sample 19 (k_s decreased)	4	0.221	1.8×10^{-17}

[1]From Maulem, 1976.
[2]k_s = saturated permeability.
[3]From G. W. Gee, 1982, *Laboratory Report on the Unsaturated Flow Characteristics of Core Samples from Nevada Test Site Well USW GU-3*, Interim Status Report to SNL from PNL, October, 65p. Updated results reported in Blair et al, 1984.
[4]Measured saturated permeability is $2.4 \times 10^{-14} m^2$.

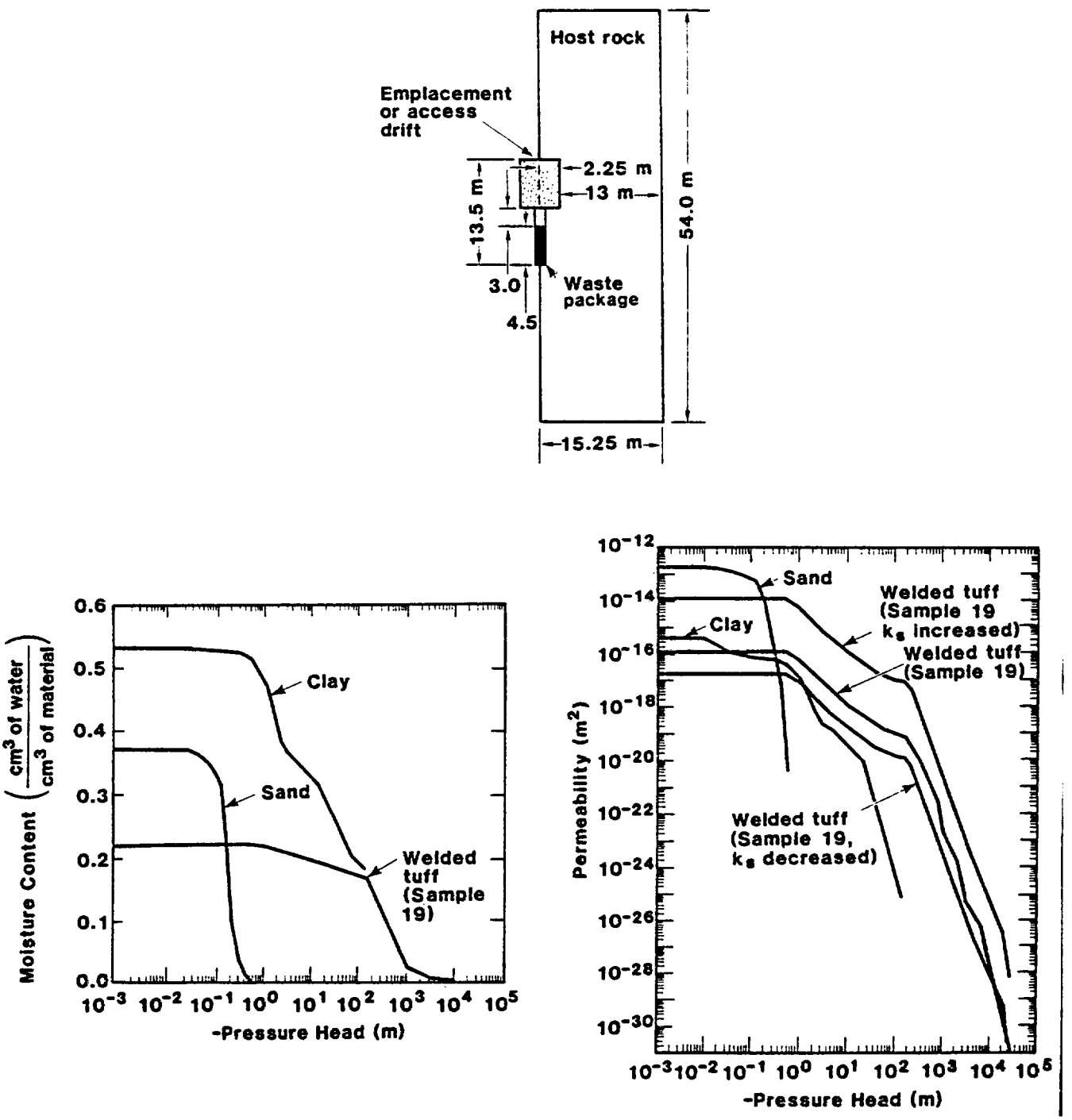

Figure 5. Geometry for Drift Analysis Assuming Vertical Emplacement of Waste Packages; Moisture Release Curves; and Unsaturated Permeability Relationships Used for Cases 1 Through 4

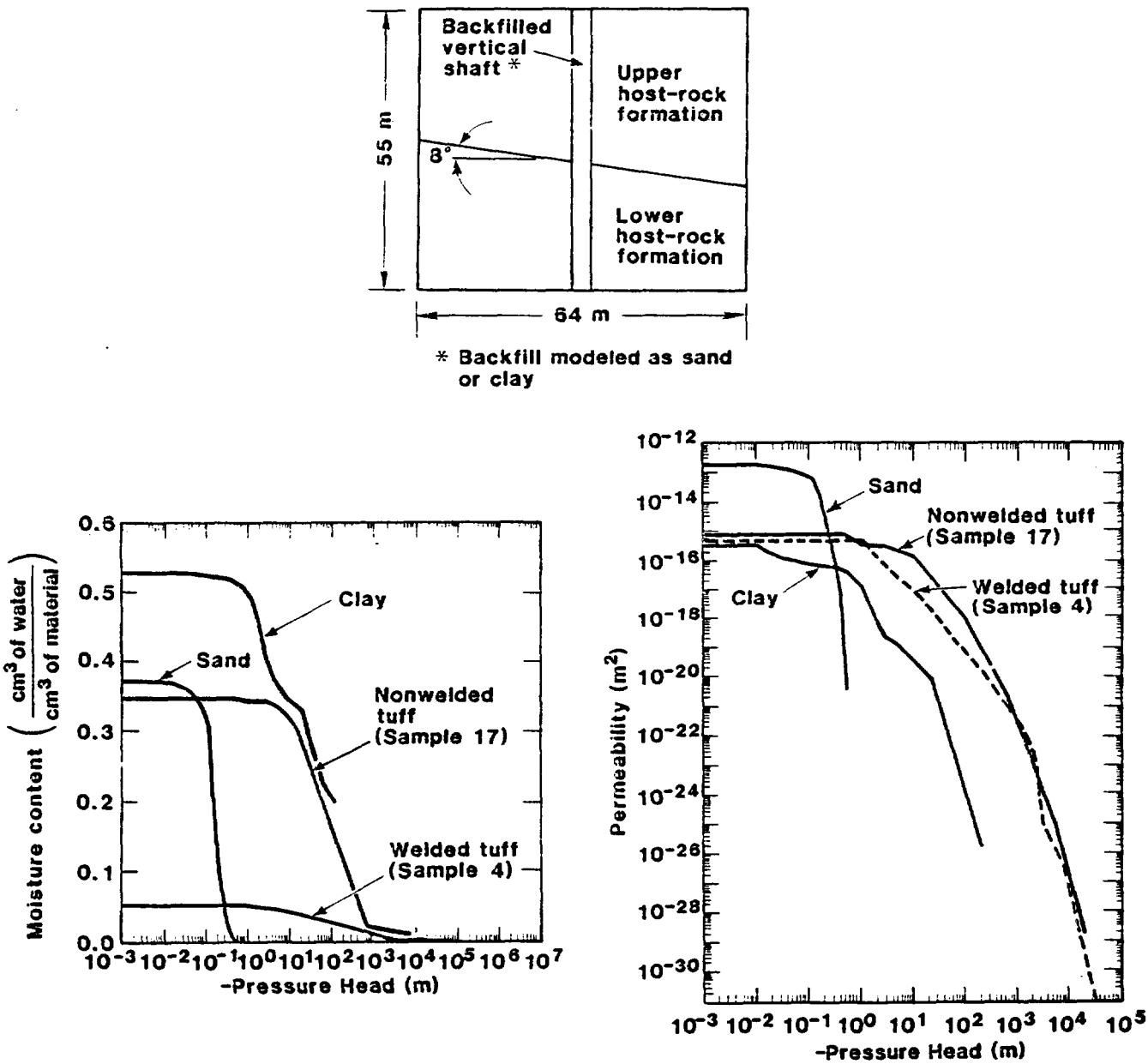

Figure 6. Geometry for Shaft Analysis; Moisture Release Curves; and Unsaturated Permeability Relationships Used for Cases 5 Through 8

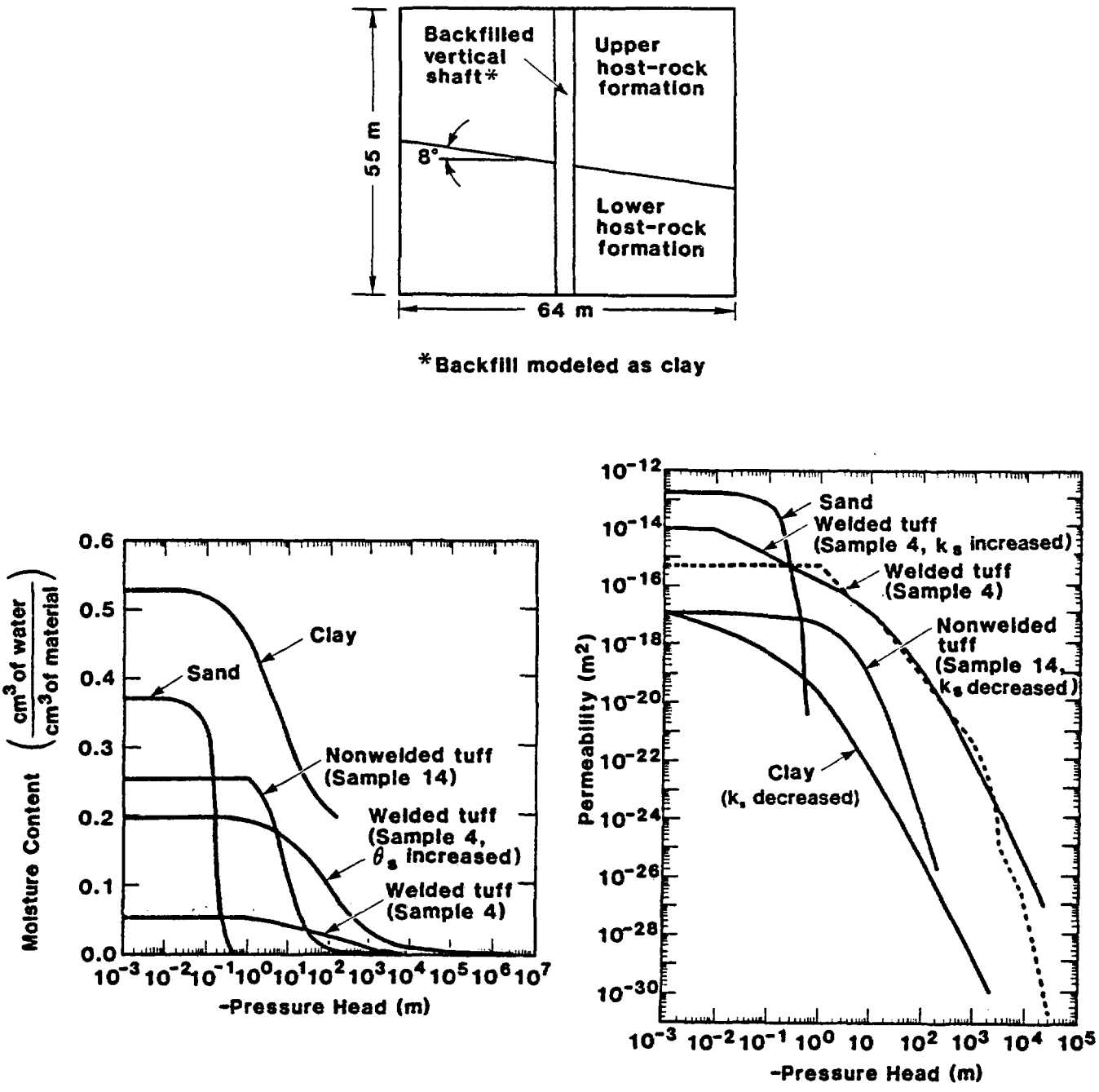

Figure 7. Geometry for Shaft Analysis; Moisture Release Curves; and Unsaturated Permeability Relationships Used for Case 9

Because no long-term meterological data existed for Yucca Mountain, the annual precipitation was assumed to be 20 cm, based on meterological studies in southern Nevada (Quiring, 1968; Bowen and Egami, 1983). Additionally, no data existed for the quantity of precipitation recharging ground-water systems through thick unsaturated zones. However, it is postulated that this quantity is extremely small (Winograd, 1981). Therefore, a value of 2% of the annual precipitation, or 4 mm/yr, was assumed. Recent data on moisture contents of the Topopah Spring Member indicate that actual recharge is probably less than about 0.5 mm/yr. These data became available only after our analyses were completed. However, because a relative comparison of flow is made in these analyses, a different flux would not significantly affect the conclusions.

Results and Conclusions From the Drift Analysis

Quantities of water migrating in the vicinity of the drift and waste package and through the drift were computed to formulate conclusions for the vertical and horizontal emplacement of waste packages. Backfill was varied in Cases 1 and 2 to determine how different backfill material influences the quantity of water passing through the modeled area. Cases 3 and 4 were analyzed to better understand the impact in increasing and decreasing the permeability versus pressure head relationship. The lower value of saturated permeability for the rock surrounding the drift (1.8×10^{-17} m^2) was selected for Case 4 to permit a flux of 4 mm/yr to pass through the formation. (New data indicate that this hydraulic conductivity may be higher than the actual hydraulic conductivity. However, because we assumed porous flow and a relative comparison of flow was made, the conclusions are not expected to be different). The upper value of saturated permeability was selected arbitrarily to be approximately three orders of magnitude greater than the lower value. Initial calculations indicated that selecting a saturated permeability of 1.0×10^{-12} m^2 was too severe, i.e., the modeled area drained rapidly and did not provide useful information.

Figure 8 illustrates the size and orientation of the elements near the waste package. Table 4 summarizes water flow from one element to another for the elements in Figure 8. The volume of water flowing into the drift for Cases 1 through 4 is given in Table 5.

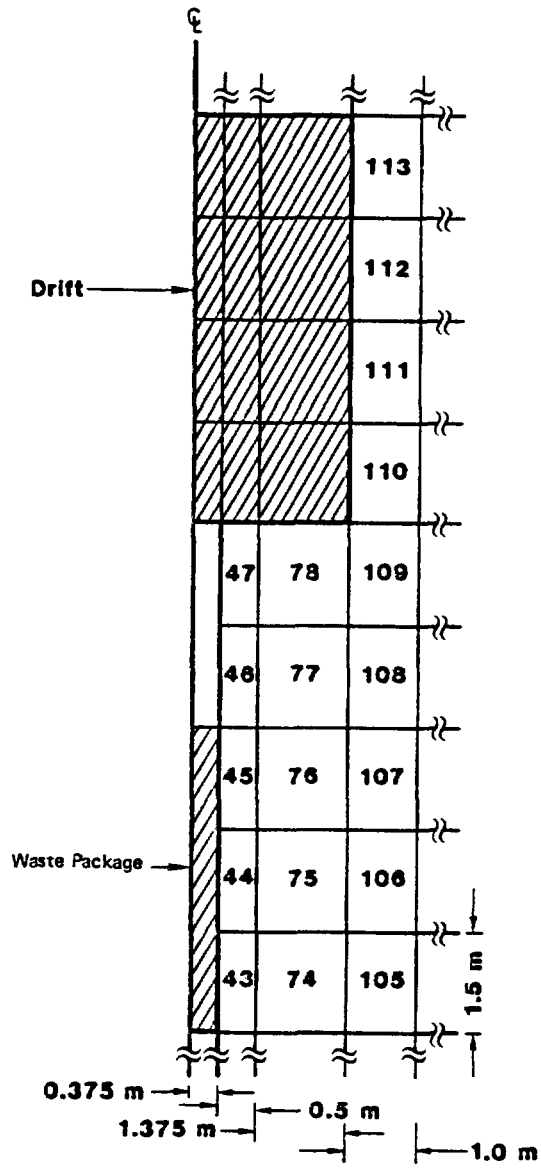

Figure 8. Size and Orientation of the Elements in the Vicinity of a Vertically Emplaced Waste Package

Table 4. Computed Flow at the Center of Elements Illustrated in Figure 8

Center of Element	Flow Rates (10^{-5} m³/day) for (1) Case 1* H†	(1) Case 1* V	(2) Case 2 H	(2) Case 2 V	(3) Case 3 H	(3) Case 3 V	(4) Case 4 H	(4) Case 4 V	Ratio of Vector Magnitudes for Various Cases (5) Case 2/ Case 1	(6) Case 1/ Case 3	(7) Case 1/ Case 4
43	0.0	0.46	0.0	0.45	0.0	0.57	0.029	0.62	0.99	0.80	0.74
44	0.0	0.42	0.0	0.41	0.0	0.52	0.017	0.64	0.99	0.81	0.65
45	0.0	0.37	0.0	0.36	0.0	0.48	0.027	0.66	0.98	0.77	0.56
46	0.0	0.29	0.0	0.27	0.0	0.42	0.049	0.69	0.96	0.69	0.41
74	0.037	1.3	0.038	1.3	0.047	1.5	0.058	1.7	0.99	0.85	0.74
75	0.051	1.2	0.054	1.2	0.040	1.4	0.053	1.8	0.99	0.83	0.68
76	0.083	1.1	0.087	1.1	0.066	1.3	0.075	1.8	0.98	0.81	0.61
77	0.13	0.91	0.14	0.88	0.13	1.2	0.12	1.8	0.97	0.77	0.50
105	0.12	0.99	0.12	0.99	0.11	1.1	0.055	1.2	1.00	0.91	0.82
106	0.16	0.97	0.17	0.97	0.13	1.1	0.052	1.2	1.00	0.93	0.82
107	0.26	0.97	0.27	0.96	0.22	1.0	0.063	1.2	1.00	0.95	0.83
108	0.43	0.99	0.45	0.99	0.45	1.0	0.069	1.2	1.01	0.98	0.90

*Cases are described in Table 2.
†"H" connotes horizontal component of flow; "V" connotes vertical component of flow.

Table 5. Volumes of Water Entering a Drift for the Drift Analysis

Case	Description	Flow Through Drift (m³/day)	Ratio of the Flow Entering Drift to the Influx* for the Modeled Area (%)
1	Vertical emplacement of waste packages—drift located in welded tuff (Sample 19) and backfilled with clay	9.2×10^{-7}	0.55
2	Vertical emplacement of waste packages—drift located in welded tuff (Sample 19) and backfilled with sand	8.2×10^{-20}	0.0
3	Vertical emplacement of waste packages—drift located in welded tuff (Sample 19, k_s increased) and backfilled with clay	4.3×10^{-7}	0.26
4	Vertical emplacement of waste packages—drift located in welded tuff (Sample 19, k_s decreased) and backfilled with clay	2.8×10^{-5}	17

*Influx = 1.671×10^{-4} m³/day

The following conclusions are drawn from the results of these calculations:

- Water flow past horizontally emplaced, waste packages cannot be altered by varying drift backfill. The (26 m) buffer zone, i.e., the zone between the drift and the first waste package, is sufficiently large to negate the effect backfill materials have on ground-water flow past the waste packages. This conclusion is based on the observation (for Cases 1 and 2) that the horizontal component of flow is less than 5% of the vertical component 5 m from the edge of drift. Further, the ratio of the vector magnitude of flow between Cases 1 and 2 (for the elements located to the right of the drift) varies by no more than approximately 0.5%.
- From a hydrologic viewpoint, backfilling of repository drifts is not essential. This conclusion is based on the observation that varying the backfill in the drifts does not significantly influence the flow rates in the vicinity of the waste packages. The ratios of flow, ranging from 0.96 to 1.01, in Column 5 of Table 4 verify this conclusion.
- If backfilling is necessary, coarse materials are apparently more satisfactory because of their capacity to drain and act as a capillary barrier. This conclusion is verified by the following results:

  1. Generally, the fluid flow past the waste packages is lower where the drifts are backfilled with sand rather than clay (Table 4, Columns 2 and 5)
  2. The clay backfill tends to drain slowly and retain some moisture (43% to 45% saturation) after steady-state conditions are reached (Case 1)
  3. The sand backfill drains more rapidly than the clay backfill and under steady-state conditions is essentially dry (less than 0.3% saturation (Case 2))

  These results also support the capillary barrier concept presented by Herzog et al (1982).

- Greater flow of water into drifts may occur when saturation in the surrounding host rock formation is high (98% to 99%), as in Case 4 (Table 5). However, this high level of saturation in Case 4 is unlikely to occur in the horizon currently being considered for the repository. The saturation level for the Topopah Spring Member may vary between 17% and 91% (Table A1).

Results and Conclusions From the Shaft Analysis

Five cases were analyzed to determine the potential water flow into a shaft due to the presence of an inclined stratigraphic contact defined by two hydrologically different materials: welded and nonwelded tuff. The intended result was to create a zone of high saturation, similar to a perched water zone, and enhance water flow into the shaft. An 8° dip was used to represent the relatively planar, stratigraphic contacts within Yucca Mountain. In all cases, sand or clay backfill was modeled in the shaft to bound the response from a broad range of potential backfill materials. Cases 5, 6, 7, and 8 were evaluated to determine the water flow into the shaft if the relative position of the nonwelded and welded tuff units were changed.

To investigate the response of contrasting materials with different permeabilities, Samples 4 and 14 were selected for analysis in Case 9. The hydraulic conductivity values for clay and nonwelded tuff (Sample 14) were scaled to values slightly greater than 1.3 $\times 10^{-8}$ cm/s, which corresponds to a 4 mm/yr flux, to prevent the formation of a ponded surface on top of the area modeled but to create a saturated condition in the nonwelded unit that would increase the saturated permeability.

The results from Case 9 demonstrated that most of the lower unit reached a fully saturated condition, and no buildup of water occurred at the interface at steady state. Only under transient conditions did a buildup of water occur.

Table 6 summarizes total flow into the shaft per unit time as well as flow into the shaft expressed as a percent of the total influx to the surface. The ratios are given only to provide a relative comparison between the cases analyzed. Note also that the water entering the shaft through the matrix is significantly less (~3 to 7 orders of magnitude) than that assumed in developing the performance criteria for water entering the shaft.

Table 6. Volumes of Water Entering a Shaft for the Shaft Analysis

Case	Description	Flow Into Shaft (m^3/day)	Ratio of the Flow Entering the Shaft to the Influx* for the Modeled Area (%)
5	Stratigraphic contact between welded tuff (Sample 4) overlying nonwelded tuff (Sample 17) intersected by a shaft backfilled with clay	8.8×10^{-6}	1.3
6	Stratigraphic contact between welded tuff (Sample 4) overlying nonwelded tuff (Sample 17) intersected by a shaft backfilled with sand	2.0×10^{-9}	0.0003
7	Stratigraphic contact between nonwelded tuff (Sample 17) overlying welded tuff (Sample 4) intersected by a shaft backfilled with clay	8.8×10^{-6}	1.2
8	Stratigraphic contact between nonwelded tuff (Sample 17) overlying welded tuff (Sample 4) intersected by a shaft backfilled with sand	2.2×10^{-9}	0.0003
9	Stratigraphic contact between welded tuff (Sample 4, k_s increased) overlying nonwelded tuff (Sample 14, k_s decreased) intersected by a shaft backfilled with clay (k_s decreased)	1.3×10^{-7}	0.02

*Influx = 7.031×10^{-4} m^3/day

The following conclusions are drawn from the results of these calculations:

- From a hydrologic viewpoint, assuming porous matrix flow, backfilling the shafts is not essential. This conclusion is based on the observation that the amount of water entering the shafts (Table 6) is insignificant.
- If backfilling is desired for structural, environmental, or other reasons, the shaft should be filled with a material that behaves hydrologically like sand. This conclusion is supported by analysis of the shaft and verified by the lower flows entering the shaft for Cases 6 and 8, in which the shafts are backfilled with sand. Also, for these cases the saturation of the sand is essentially zero.

Approach and Input Used for the Shaft and Drift Drainage Analyses

The Glover and Nasberg-Terletskata equations were used for the shaft drainage analysis (Case 10), and the equation developed for the parallel plate analogy for fracture flow was used for the drift drainage analysis (Case 11).

The possibility of using a shaft for drainage below a repository (Case 10) was investigated using methods proposed by the US Bureau of Reclamation (USBR) and was summarized and critiqued by Stephens and Neuman (1982a, b). The USBR methods investigate infiltration from boreholes and are termed open-hole tests. Open-hole tests are used to determine saturated hydraulic conductivities from within the unsaturated zone. The main advantage of open-hole tests over other techniques commonly used to predict infiltration is that the USBR methods are two-dimensional in describing infiltration from a borehole (Philip, 1969).

Two of the steady-state methods summarized by Stephens and Neuman, Glover and Nasberg-Terletskata, are used directly in evaluating the shaft drainage potential. Both methods assume free-surface flow (Figure 9). Free-surface theory assumes that all flow occurs in the saturated zone, separated from the dry zone by the free surface. In two dimensions, the free surface is a streamline across which no flow can occur and a line which is an isobar at zero pressure.

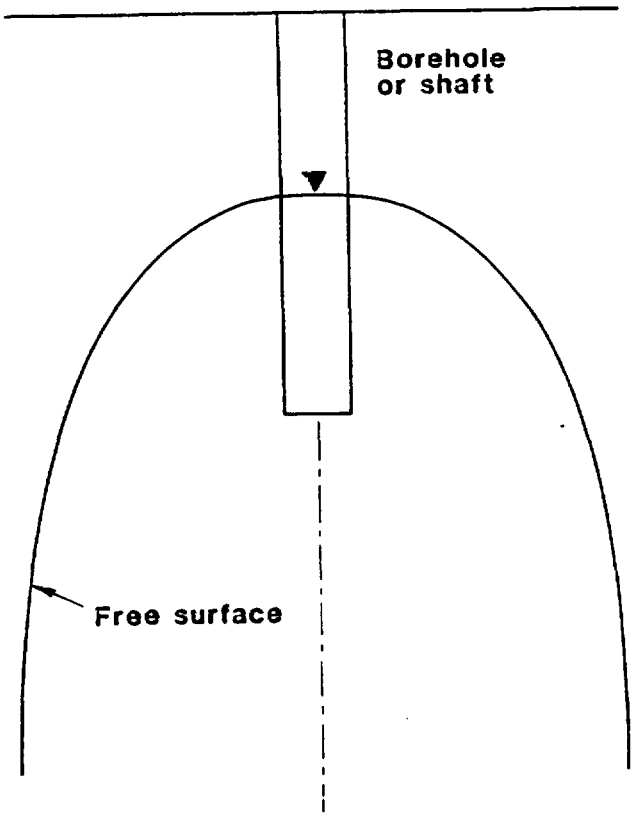

Figure 9. Classical Concept of Free-Surface Flow From a Borehole Above a Deep Water Table

The equation of Glover is

$$K_s = \frac{Q_s}{C_u rH}$$

where

$$C_u = \frac{2\pi(H/r)}{\sinh^{-1}(H/r)-1}$$

K_s = saturated, effective hydraulic conductivity (m/day),
Q_s = borehole infiltration rate at steady state (m^3/day),
r = radius of the shaft (m)
H = height of the water column in the shaft (m).

Glover's equation assumes that flux linearly increases with depth along the shaft walls. The equation of Nasberg-Terletskata is

$$K_s = \frac{0.423\, Q_s}{H^2} \log\left(\frac{2H}{r}\right)$$

where all variables are defined as before. This method assumes that flux is uniform along the shaft walls.

These equations were rewritten in terms of Q_s for the scoping calculations, and K_s was assumed to be known. The following assumptions were also made:

- The length of the shaft in hydraulic contact with the host-rock formation was equal to the height of the standing water column in the shaft.
- The concept of free-surface flow was a valid approximation.
- The formation below and surrounding the shaft was homogeneous and isotropic. This may be a "weak" assumption because it was recognized that fracture-rock systems are anisotropic by nature.
- Capillary flow was insignificant, and gravitational forces dominated flow.
- Effective hydraulic conductivity of fractured tuff may be determined from the limited information on fractures that was available.

The effective hydraulic conductivity was computed from limited information available on fracture characteristics, including fracture frequency, aperture width, and hydraulic conductivity for welded tuff. A fracture frequency of 5 fractures/m was assumed. This was considered a conservative fracture frequency based on information discussed by Scott et al (1983). Specifically, 20 to 40 fractures/m^3 were measured from Topopah Spring Member core and 6 to 8 fractures/m^3 were measured from outcropping of densely welded tuff in the vicinity of Yucca Mountain.

Values for aperture width and hydraulic conductivity of fractures were obtained from limited testing of the welded tuff portion of the Grouse Canyon Member (Zimmerman and Vollendorf, 1982). From Zimmerman and Vollendorf's results, two sets of values were selected for hydraulic conductivity and aperture width. One set represented the lowest measured hydraulic conductivity, 0.022 cm/s, with an associated aperture width of 1.63×10^{-5} m. The second set represented an arithmetic mean of the 12 hydraulic conductivities, 0.758 cm/s, with an associated width of 9.64×10^{-5} m.

Using the information presented above, the effective hydraulic conductivity was computed. Because the matrix hydraulic conductivity was considerably lower than the hydraulic conductivity of the fractures, no flow through the matrix was assumed. The effective hydraulic conductivity for the values associated with set one was

$$\left(\frac{\text{Area}_{\text{Fractures}}}{\text{Area}_{\text{Unit Area}}}\right) \times (\text{Hydraulic Conductivity}_{\text{Fracture}})$$

or

$$\left(\frac{(1.63 \times 10^{-5}\ \text{m})\ (1\ \text{m length})\ (5\ \text{fractures})}{\text{m}^2}\right) \times$$

(0.022 cm/s)

or

1.8×10^{-6} cm/s.

An effective hydraulic conductivity of 3.7×10^{-4} cm/s was similarly computed for the second set of values.

Flow into a drift floor (Case 11) was evaluated to determine the extent of floor used to dissipate water from a discrete fault or fracture zone. The following assumptions were made for the drift drainage analysis.

- Fracture flow was assumed to dominate in the fault or fracture zone
- Fully saturated flow was assumed
- Fracture spacing was assumed to be five fractures per meter (same as shaft drainage analysis)
- Aperture size for fractures was 1.63×10^{-5} m (the smallest value used in the shaft drainage analysis)

Flow was computed using the information provided above and the equation for the parallel plate analogy for flow in fractures. This equation is

$$v = \rho g \frac{(e)^2}{12\mu}\left(\frac{dh}{dl}\right)$$

where

v	=	velocity of water in fracture (m/day)
ρ	=	mass density (kg/m^3)
g	=	acceleration due to gravity (m/day^2)
e	=	aperture width for fracture (m)
μ	=	dynamic viscosity of water at 32°C (kg/(m · day))
$\frac{dh}{dl}$	=	hydraulic gradient (assumed to be 1 m/m)

Results and Conclusions From the Shaft and Drift Drainage Analyses

The Glover and Nasberg-Terletskata equations were used to compute flow rate from three shafts having diameters of 3.1 m, 4.3 m, and 6.7 m (Case 10). The extreme values approximated the minimum and maximum diameter of vertical penetrations being considered for the repository. The intermediate value represented the size of the exploratory shaft.

Figure 10 illustrates the flow rates from the shafts as determined by both equations. Infiltration flow rates determined by using Glover's equation are consistently larger than those computed by the Nasberg-Terletskata equation. When the ratio of H/r is ≥10 the Glover equation is reasonably accurate (Stephens and Neuman, 1982a).

Based on the equation for fracture flow, a drift width of 6.1 m, and a fracture aperture width of 1.63×10^{-5} m, the volume of water dissipating into the drift floor was computed (Case 11). For drift floor segments of 3 m, 6 m, 9 m, and 12 m, the computed volumes were 0.036 m^3/day (9.5 gpd), 0.073 m^3/day (19 gpd), 0.11 m^3/day (29 gpd), and 0.15 m^3/day (40 gpd), respectively.

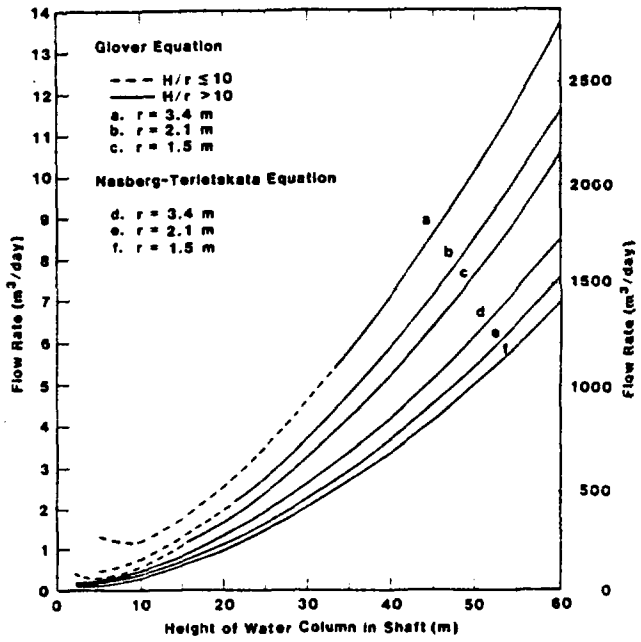

Figure 10. Infiltration Rate Through the Bottom of the Shaft Using the Glover and Nasberg-Terletskata Equations. (Left axis represents flow rates assuming an effective hydraulic conductivity of 1.8×10^{-6} cm/s. Right axis represents flow rates assuming an effective hydraulic conductivity of 3.7×10^{-4} cm/s.)

From the shaft and drift drainage analyses, the following conclusions are made:

- Any reasonably expected inflow can be effectively drained through the bottom of the shaft, even when considering conservative values of

fracture spacing and permeability. This conclusion is reached by comparing the performance criteria value of 100 m^3/yr (70 gpd) for a 3.1-m diameter shaft and 150 m^3/yr (110 gpd) for a 6.7-m diameter shaft with the values given in Figure 10.

- Considering the possible effects of fracture permeability, any reasonably expected inflow into a drift can be drained through a 6-m length of drift floor. This is based on the assumption that water flows from a discrete fault or fracture zone would be similar to the faults encountered in Rainier Mesa, i.e., 0.057 m^3/day (15 gpd).

Repository Sealing Concepts

The sealing concepts presented in this section are based on information available on the Yucca Mountain and Rainier and Pahute Mesas hydrogeology, the preliminary repository design concepts, the boreholes, hydrologic calculations, and the functional requirements and performance criteria for sealing. A description of each component planned for the sealing subsystem is included.

Shaft Sealing

The locations for five shafts are illustrated in Figure 2. All are tentatively located on the east side of the repository and are planned to extend below the repository horizon. A concept for shaft sealing includes the surface barrier, shaft fill, settlement plugs, and a station plug (Figure 11).

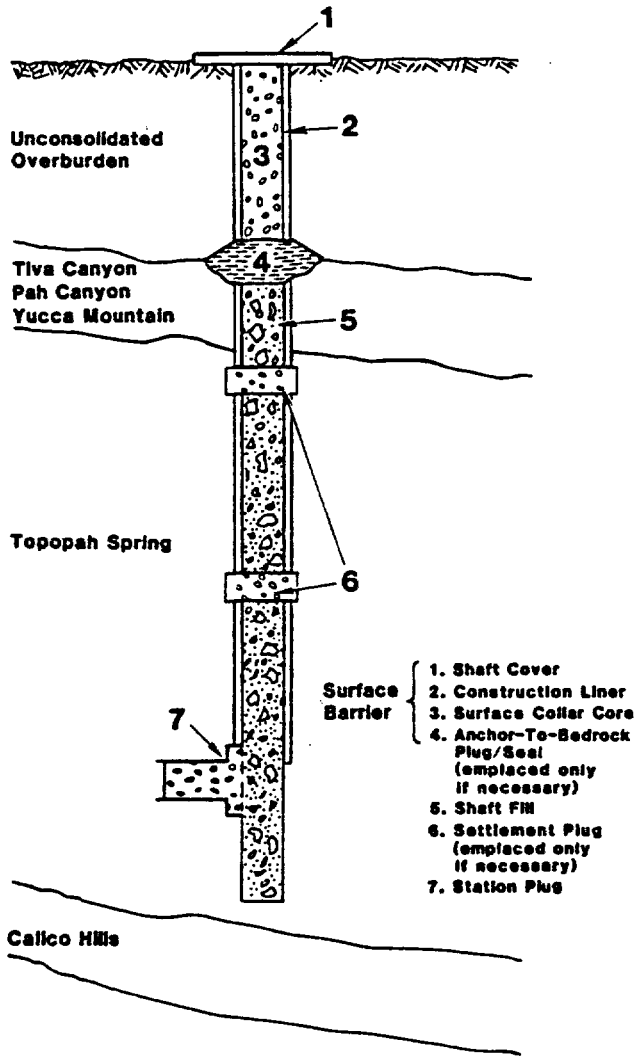

Figure 11. Shaft Sealing Components

Surface Barrier

As indicated in the performance criteria chapter, it is desirable to reduce settlement of the shaft fill to 1% to 2% and to control infiltration into the shaft. A surface barrier is recommended as a viable means of achieving the settlement and water control. The surface barrier is comprised of several components: a shaft cover, a construction liner, a surface collar core, and an anchor-to-bedrock plug/seal (Figure 12).

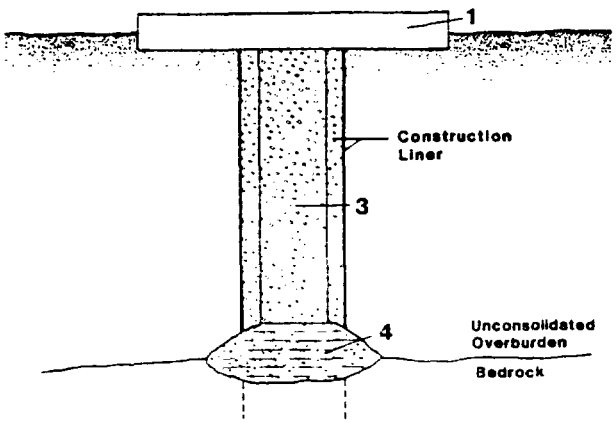

Figure 12. Sealing Concept Proposed for the Surface Barrier

Component	Desirable Properties
1–Shaft Cover	• Design to be determined (TBD), to control surface flow into shaft
3–Collar Core	• Low porosity (5% to 10%) • Moderate strength (~40 MPa) • Permeability TBD, to control surface flow into shaft
4–Anchor-to-Bedrock Plug/Seal (only if necessary)	• Strength sufficient to support the surface collar core • Permeability TBD, to control surface flow into shaft

The shaft cover should divert water from entering the shaft and should act as a marker describing the purpose of the shaft and underground workings. The cover should be extended sufficiently far from the centerline of the shaft to divert surface water away from the shaft. A grout curtain around the shaft collar was considered to prevent water from entering the shaft. However, consideration of this component was discontinued because (1) the shaft cover and the anchor-to-bedrock plug/seal perform similar functions and (2) quantity of surface infiltration is not considered large enough to warrant this design feature.

It is suggested that the shaft collar, which includes a steel-reinforced concrete liner, with periodically spaced ring beams, remain in place. Reasons for not removing the shaft collar include

- The potential safety hazard associated with its removal
- The comparatively low permeability of the concrete liner as compared to the surrounding medium, particularly if the medium is unconsolidated overburden
- The limited oxidation of the metal liner and, subsequently, the limited creation of by-products detrimental to the concrete

Prior to emplacing the surface collar core, the shaft outfitting steel should be removed. The surface collar core could be a low-porosity/permeability, conventional strength concrete (~40 MPa). In general, a material having a low-porosity will have a low permeability, as suggested by the Kozeny-Carmen equation (Bear, 1972).

Two additional properties were considered for the core component: a high-strength concrete (~140 MPa) and special abrasive additives to discourage intentional intrusion into the repository through the shafts. However, because effective means exist to excavate high-strength materials and materials containing abrasive additives, consideration of these properties was dismissed. Additionally, intruders that could effectively excavate lower strength materials containing few abrasive additives from a 300- to 400-m shaft would be minimally inconvenienced by the presence of higher strength, more abrasive material at the surface.

The purpose of the anchor-to-bedrock plug/seal, if needed, is to provide structural support for the collar core and control the flow entering the upper portion of the shaft. The bulk permeability for the anchor-to-bedrock plug/seal and the interface permeability between this component and the underlying rock unit, therefore, depend on the thickness and hydraulic characteristics of the unconsolidated overburden and on the surface precipitation. If it is determined that this component should have a low permeability, it may be desirable to reinforce the component to minimize shrinkage, cracking, and settlement, particularly if concrete is used.

Lower Shaft

Two components may be placed in the lower shaft: shaft fill and settlement plugs (Figure 13). The shaft fill allows water entering the shaft to be drained at the bottom of the shaft, and the settlement plugs reduce the surface settlement.

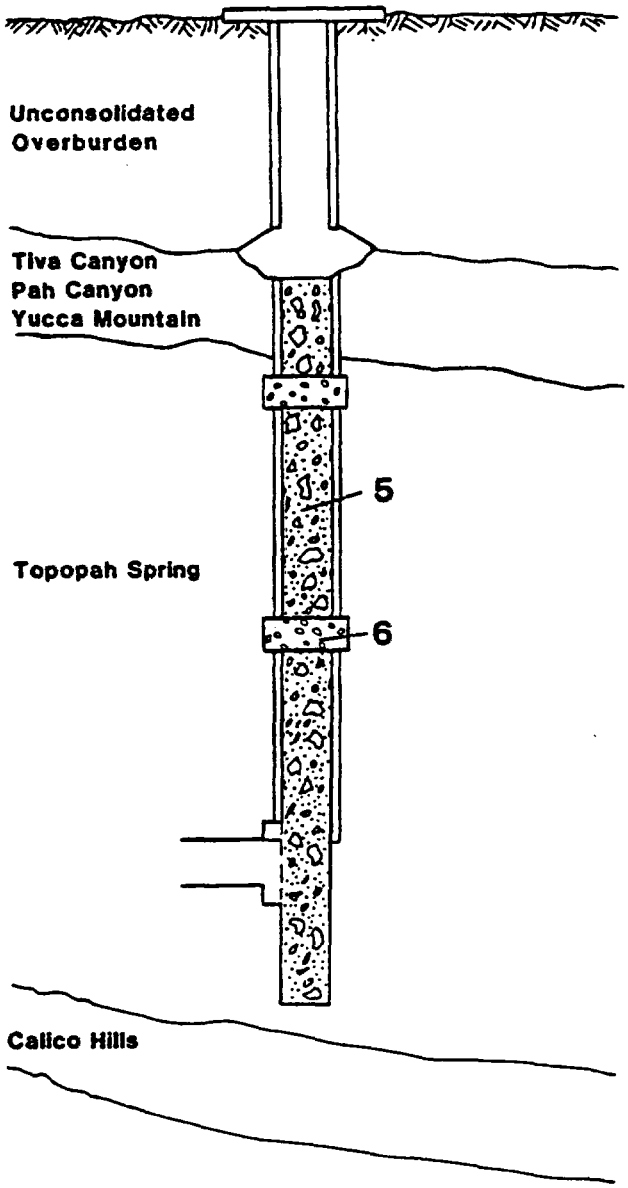

Component	Desirable Properties
5 - Fill	• Moderate porosity • High permeability, few fines • Graded to reduce settlement
6 - Settlement Plug (only if necessary)	• Design TBD, to allow passage of water to bottom of shaft • Strength dependent on the load carried; tradeoff possible between spacing, material properties, and designs

Figure 13. Sealing Concept Proposed for the Lower Shaft

As shown by the results from the shaft drainage analysis, the concept of using the lower shaft as a means of draining any water which enters the shaft, either 100 m^3/yr or 150 m^3/yr, is valid. The shaft fill should allow water entering the shaft to be drained to the bottom of the shaft. Settlement plugs are considered in the concepts because of the potential for settlement and the desire to reduce settlement to 1% to 2% of the backfilled length of the shaft.

Prior to emplacing the shaft fill, it may be necessary to remove all shaft outfitting steel that is anchored to the concrete liner. Steel left in the shaft could hamper backfilling operations. At the bottom of the shafts, below the repository station, the concrete liner should be removed or perforated to permit drainage through the walls of the shaft. The shaft should then be backfilled. The backfill, as determined by the preliminary calculations, should be a coarse, well-graded, unreactive material, e.g., crushed tuff, to reduce settlement and to act as a drain. Testing is required to define the grading.

Settlement may be further reduced by selecting the proper emplacement technique, installing settlement plugs, and allowing settlement to occur prior to abandoning the shaft. If it is necessary to control settlement by using settlement plugs, it may be desirable for each plug to have a high permeability or be designed to drain water that may collect above it. This could be accomplished by placing tubes through the plug or emplacing a no-fines concrete. The strength, spacing, and placement of the plugs require knowledge of the load exerted on each plug and the competency of the rock into which it is placed. The plugs may be keyed into the shaft for additional support. This requires removal of the liner, if it is located above the repository station, and excavation of additional rock.

Station Plug

The repository station is the area comprising the intersection of the shaft and the horizontal drifts. The proposed station plug is a structurally competent material that can resist the lateral forces exerted by the shaft fill (Figure 14). Therefore, a primary purpose of this component is to prevent movement of the shaft fill into the access drift thereby aiding in achieving the settlement performance criteria of 1% to 2%. Additionally, the need to establish hydrologic requirements for the station plug will be evaluated by considering the potential for lateral flow into the repository horizon through the station plug.

A grout curtain, conically shaped and sloping towards the shaft, was also considered. This concept was dismissed because a grout curtain (1) would intercept a very small quantity of water, if any, and (2) would not reduce the flow of water past the waste packages because of its distance from the waste storage area.

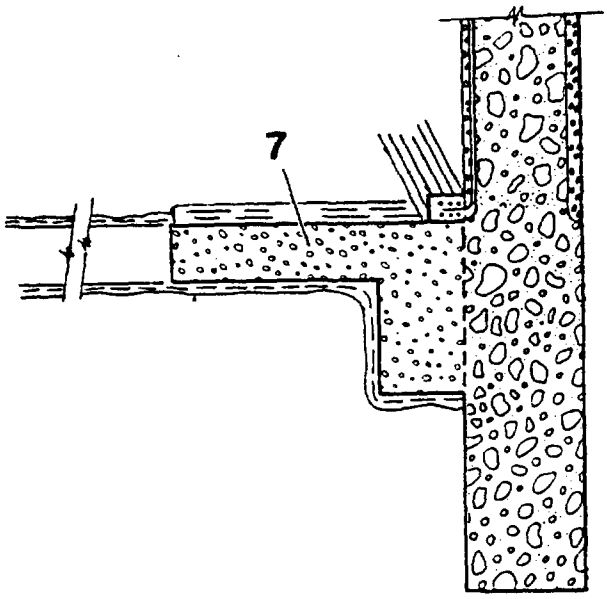

Component	Desirable Properties
7 - Station Plug	• Design TBD, to restrict water flows into the storage area • Strength sufficient to resist the load due to the shaft fill

Figure 14. Sealing Concept Proposed for the Station Plug

Ramp Sealing

The concepts for sealing a ramp (Figure 15) are similar to those for sealing a shaft. The major differences are proposed periodic installation of dams that will be designed to encourage downward flow of water through the tuff rather than allowing lateral flow down the ramp. The frequency of and necessity for dams depend on the water flow into and down the ramp. This flow is anticipated to be negligible. If these dams are needed, they should have mechanical properties compatible with the surrounding rock and should have a permeability that is less than the effective permeability of the undisturbed rock.

If a discrete fault or fracture zone that provides a continuous supply of water is encountered, one of the concepts for sealing faults (described in the report) can be installed. If extensive concrete or grout is placed on the floor or ribs of the inclined ramp, it can be removed or perforated, partially or totally, to enhance the ramp's drainage capability. Concrete or grout at the roof of the ramp may act as a diversion shield for water and therefore should not be removed. The anchor-to-bedrock component within the ramp may not be required because of the reduced importance of structural support for the surface core.

Backfilling of Access and Emplacement Drifts

From a hydrologic viewpoint, backfilling of drifts is not necessary based on the TRUST calculations and the hydrogeologic information available from Yucca Mountain, and Rainier and Pahute Mesas. This conclusion is verified by the results which showed that water flow past the waste package is essentially the same regardless of the type of backfill used. It may be desirable, however, to place the mined material in the emplacement and access drifts to reduce the environmental impact created by placing the excavated tuff at the surface or to provide structural support for the drifts. The desirability of backfilling waste emplacement holes is considered part of the waste package design and is therefore not included here.

Excavated tuff may be processed at the surface or at depth and pneumatically transported and emplaced through modification of existing technology (Eby and Eby, 1982; Maksimovic and Draper, 1982; and Maksimovic and Lipscomb, 1982). No differences in backfilling drifts are anticipated for either vertical or horizontal emplacement of waste packages except for the volume of fill required.

Sealing in the Vicinity of Waste Packages

Avoiding water-bearing faults or fractures (located during mining of emplacement drifts) is perhaps the most effective approach in minimizing the contact between the water and waste packages that are vertically emplaced. For horizontal emplacement, however, avoiding continuously draining fractures or faults may be more difficult and costly because of the greater number of waste packages associated with each hole. Two concepts are suggested to isolate water-bearing zones (Figure 16) encountered while drilling horizontal emplacement holes.

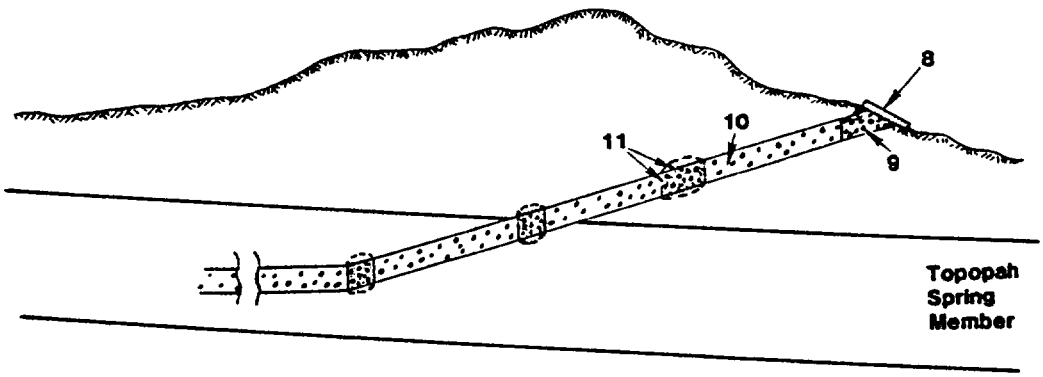

Component	Desirable Properties
8 - Ramp Cover	• Design TBD, to control surface flow into ramp
9 - Collar Core	• Low porosity (5% to 10%) • Moderate strength (~40 MPa) • Permeability less than or equal to the effective permeability of the surface stratigraphic unit
10 - Fill	• High porosity • High permeability, few fines
11 - Dam the (only if necessary)	• Permeability less than the effective permeability of undisturbed rock • Low porosity (5% to 10%)

Figure 15. Sealing Concept Proposed for the Ramp

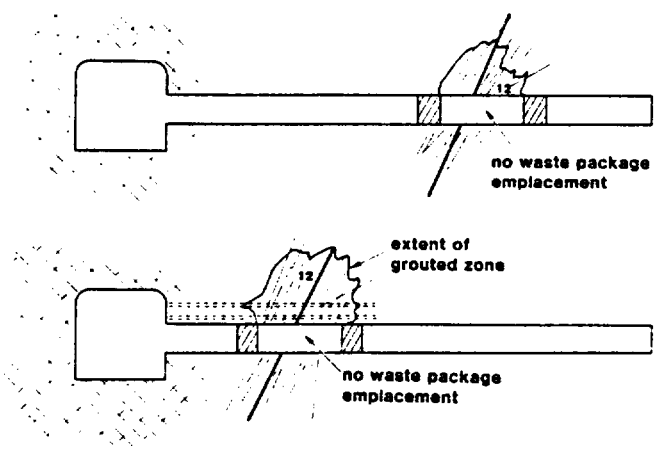

Component	Desirable Properties
12 - Fault Seal	• Permeability less than the effective permeability of the Topopah Spring Member

Figure 16. Sealing Concepts Proposed for Isolating Discrete, Water-Producing Faults or Fracture Zones in Horizontal Waste Emplacement Holes

If a water-producing zone is encountered during drilling, its extent should be recorded and its output should be monitored to note any changes in flow. If no decrease in flow is observed within a reasonable period of time and the volume of flow is not considered excessive, the drilling and casing operation should proceed. Prior to the emplacement of waste packages the zone can be grouted off, if necessary, by perforating the casing and grouting the zone with a grout that is thermally, physically, and chemically compatible with surrounding rock. The zone can also be grouted before the hole is cased if the casing is not advanced beyond the water-producing zone. If the faulted zone is relatively close to the alcoves used in drilling the horizontal holes, a series of small grout holes can be drilled parallel to the emplacement hole and a grouted cap formed above the emplacement hole.

Some uncertainty is associated with these concepts. The fracture pattern of the formation is likely to be vertical. Grouting is most effective when the rock void filled is perpendicular to flow. The remoteness of the operation may also create some difficulty and may require development and verification of emplacement equipment.

Additional confidence that contact between water and waste package can be minimized can be achieved by not placing waste packages below or near water-producing zones and by emplacing seals within the waste emplacement hole on both sides of the water-producing zone. If the performance criterion value of 0.014 m^3/day is assumed, and an approach similar to that used for the drift drainage analysis is used, a distance of 25 to 40 m would be required between the seals emplaced in the horizontal emplacement hole to dissipate the water. This distance assumes not only a flow rate of 0.014 m^3/day, but also no emplacement of a fault seal.

Options for Sealing a Discrete Fault or Fracture Zone in an Access and Emplacement Drift

Because of the highly fractured nature of the Topopah Spring Member, it is possible that flow occurs in fault and fracture zones. Because no direct observations have been made in densely welded tuff similar to the Topopah Spring Member, uncertainty is associated with the conditions to be encountered over a large excavated area. If continuously draining water is encountered in an emplacement or access drift, four options are proposed to divert water from the waste packages. The first and second options are preferred because they should provide sufficient capability to drain 0.057 m^3/day, the performance criterion for a discrete, water-producing zone in a drift. As shown by the results of the drift drainage analysis, a drift floor segment of 6 m should effectively drain 0.057 m^3/day of water. Options three and four, capable of diverting or controlling significantly more flow, are also provided. In addition to providing water control following decommissioning, options 1, 2, and 3 could also be effectively implemented during the operational period of the repository.

The first option (Figure 17) is simple and uses a rectangular drain or a series of boreholes (spot drilling) to increase the drainage area, thereby decreasing the drift floor area required for drainage. As was observed in the analyses associated with drainage from the bottom of a shaft, the larger the diameter of the hole and the standing column of water, the greater the drainage capacity of the borehole. This principle also applies to a rectangular drain. The floor drain can be filled with a high-permeability material with few fines to prevent clogging of the fractures. The floor can be excavated at the time of drift construction to focus the water into the drain(s).

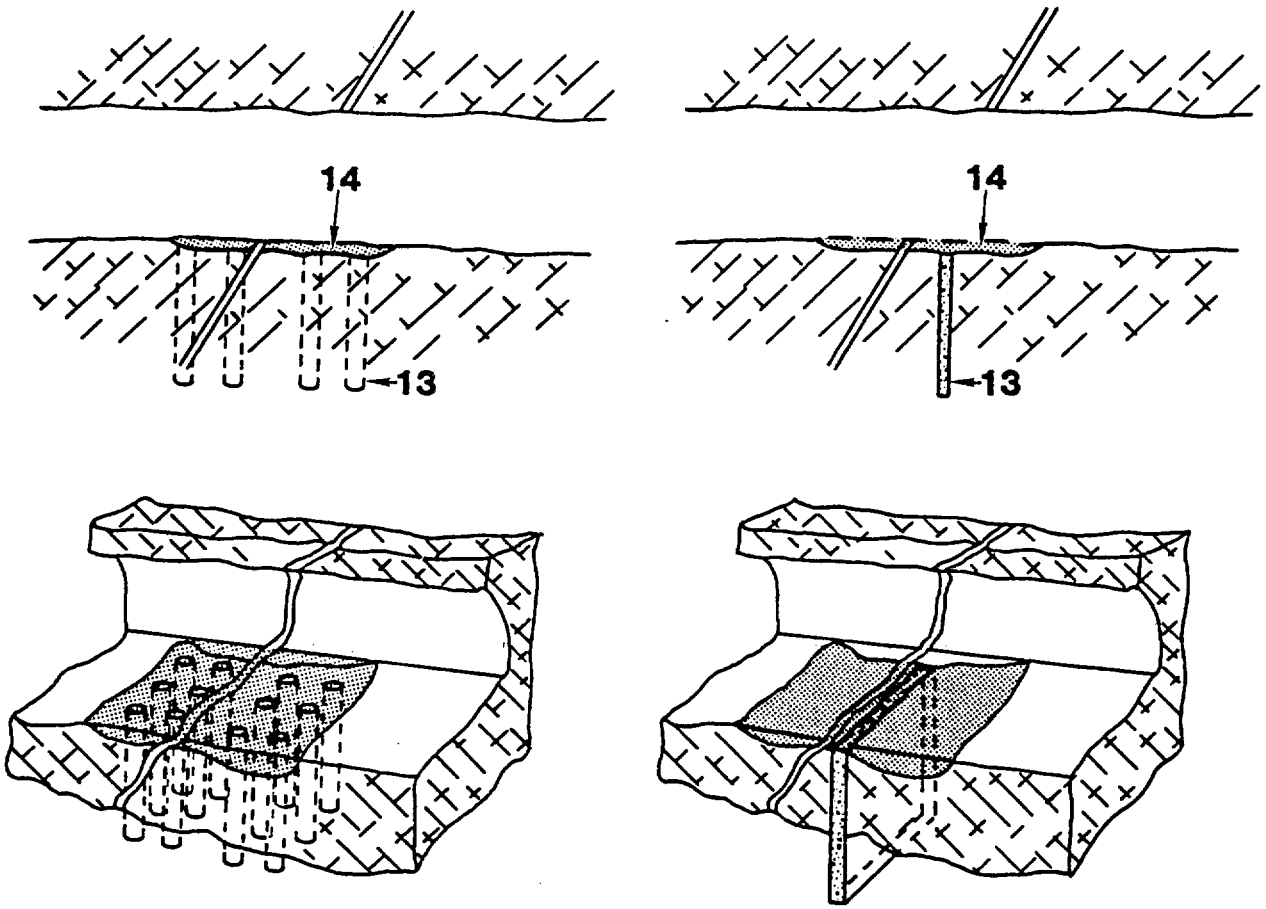

Component	Desirable Properties
13 - Drain (rectangular or isolated boreholes)	• Size TBD, dependent on water inflow and effective permeability of the drift floor • High permeability, few fines
14 - Water Collection Area	• Design TBD, dependent on the water inflow and the effective permeability of the drift floor

Figure 17. Sealing Concept Proposed for Isolating a Discrete, Water-Producing Fault or Fracture Zone in an Access or Emplacement Drift (First Option)

The second option (Figure 18) relies on drainage through the drift floor. Concrete dams are placed to restrict the potential migration of water, and a grout curtain is placed beneath each dam to prevent water from migrating laterally in the disturbed zone. The grout should reduce the effective permeability in the disturbed zone below that of the fractured zone in the water collection area.

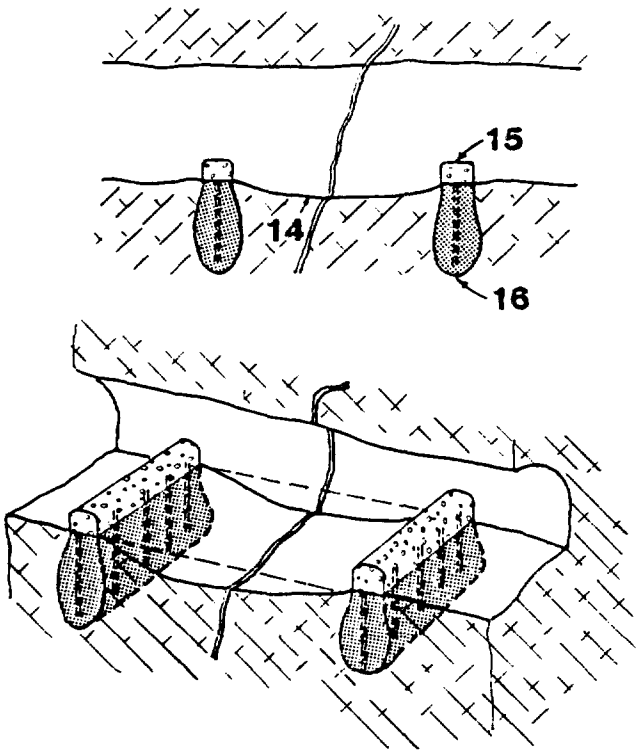

Component	Desirable Properties
14 - Water Collection Area	• Design TBD, dependent on the water inflow and the effective permeability of the drift floor
15 - Dam	• Design TBD, to restrict lateral flow of water • Permeability less than the effective permeability of the Topopah Spring Member
16 - Grout Curtain	• Permeability less than the effective permeability of the Topopah Spring Member

Figure 18. Sealing Concept Proposed for Isolating a Discrete, Water-Producing Fault or Fracture Zone in an Access or Emplacement Drift (Second Option)

The third option (Figure 19) is often used where relatively massive flows of water are encountered. The effective permeability of the grouted zone should be less, perhaps by two orders of magnitude, than the effective permeability of the unaffected, fractured-rock zone, so that the bulk of the flow is diverted around the tunnel. The evaluation of how effective the grouting effort must be is highly dependent on the zone grouted. As with all grouting operations, the injection pressure must be carefully monitored to prevent hydrofracturing of the rock mass.

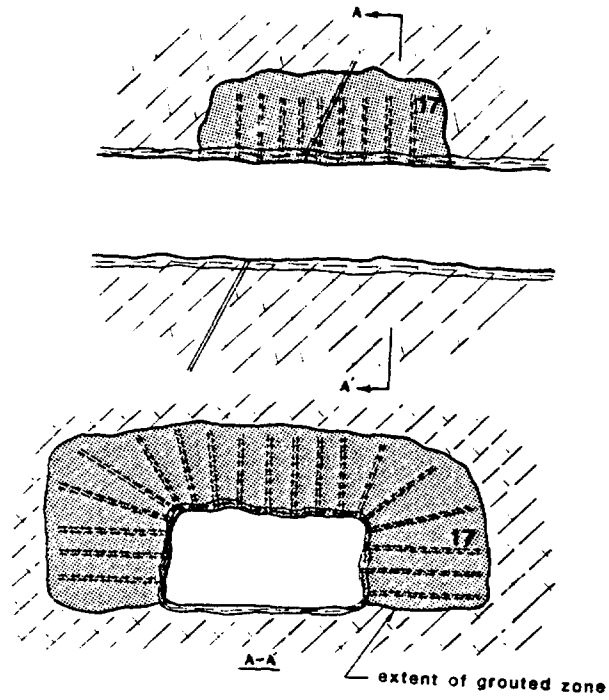

Component	Desirable Property
17 - Fault Seal	• Permeability less than the effective permeability of the Topopah Spring Member

Figure 19. Sealing Concept Proposed for Isolating a Discrete, Water-Producing Fault or Fracture Zone in an Access or Emplacement Drift (Third Option)

The fourth option (Figure 20) is the most complex of all seal options because it uses external fault seals and grout curtains to assure that massive flow does not occur in the drift. This option, because of its complexity, is reserved for major continuous flow that cannot be handled by any other option or combination of options. The drift backfill is placed between the external fault seals to provide stability in the faulted zone.

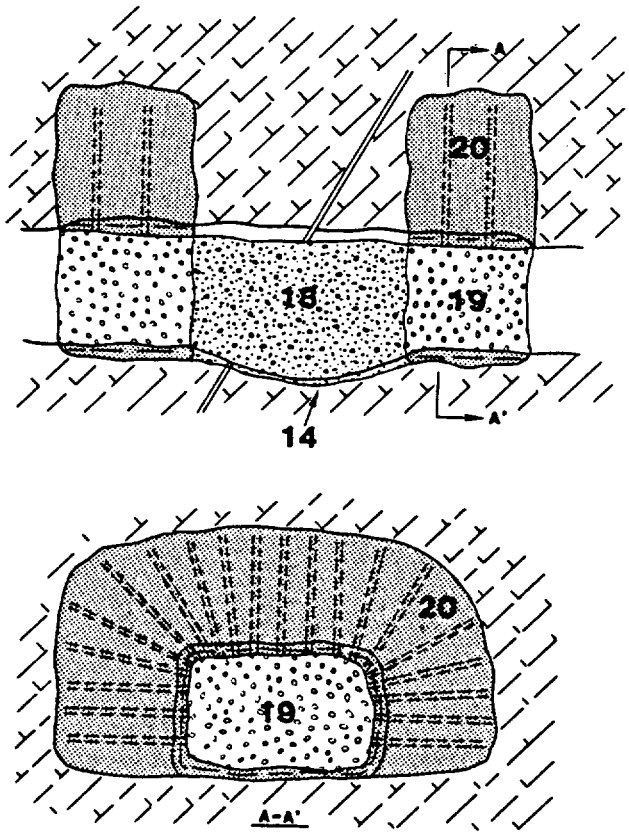

Component	Desirable Properties
14 - Water Collection Area	• Design TBD, dependent on the water inflow and effective permeability of the drift floor
18 - Drift Backfill	• High permeability, few fines
19 - External Fault Seal	• Permeability less than the effective permeability of the Topopah Spring Member • Strength adequate to prevent unwanted fracturing due to in situ stresses
20 - Grout Curtain	• Permeability less than the effective permeability of the Topopah Spring Member

Figure 20. Sealing Concept Proposed for Isolating a Discrete, Water-Producing Fault or Fracture Zone in an Access or Emplacement Drift (Fourth Option)

Borehole Sealing

Boreholes near the repository can be placed in three categories:

- Shallow boreholes that require no special sealing; for example, wells UE-25a #4, #5, #6, and #7, because they do not penetrate the repository horizon.
- Relatively deep boreholes, up-gradient in the saturated zone from the proposed repository, that require no special sealing; for example, wells USW H-1, USW H-6, USW WT-4, -7 and -9, UE-25b #1, and UE-25a #1, because no lateral flow mechanism that could transport radionuclides upgradient for long distances appears to exist.
- Boreholes that may require sealing; for example, USW H-3, USW GU-3/G-3, and USW H-5, because they penetrate the repository horizon, the Tuffaceous Beds of Calico Hills, and the ground-water table.

The Tuffaceous Beds of Calico Hills are considered a protective barrier to radionuclide migration because of their high content of zeolites and their thickness. Where the Calico Hills unit and the repository are penetrated, there is a potential for radionuclide release. This potential is considered low because (1) the ratio of the cross-sectional area of boreholes in the third category to the repository area is extremely small and (2) it is difficult to develop a reasonable and factually based scenario that could cause a significant release of radionuclides through a series of boreholes. Limited special sealing is nevertheless proposed.

The objectives of sealing boreholes are to control preferential water movement through the Tuffaceous Beds of Calico Hills and to dissipate any water possibly entering the boreholes into the densely welded, highly fractured tuff. To accomplish these objectives it is tentatively recommended that the casing be removed if it is in contact with the Tuffaceous Beds of Calico Hills, as in wells USW GU-3, USW G-4, USW H-5, USW H-4, and USW H-3. The Calico Hills unit and the zones immediately above and below should be sealed with a grout material, a slurry, or a tamped material possibly containing zeolites or other sorptive materials. Additionally, this seal should have an effective hydraulic conductivity that is less than or equal to the Calico Hills unit. To provide support for material placed in this zone a plug may have to be installed

below the sealed zone. Below this plug, standard well plugging should be performed. Above the seal proposed for the interval penetrating the Calico Hills unit, a granular material may be emplaced.

The concept described above is illustrated in Figure 21. A second concept could utilize grout in the entire borehole. This is considered an acceptable alternative because water inflow into a borehole appears to be negligible, particularly if compared to the potential volume of water that would pass the waste package.

Settlement plugs can be emplaced, if required. Also, the cover of the borehole should reduce surface water from entering the borehole and should be used as a marker.

Nevada state law specifies that a plug at least 15 m long must be installed at the surface and that a cement plug at least 30 m in length must be centered at the base of the surface casing. Because these requirements were developed for circumstances encountered in oil and gas wells, their direct applicability to boreholes associated with an HLW repository is questionable.

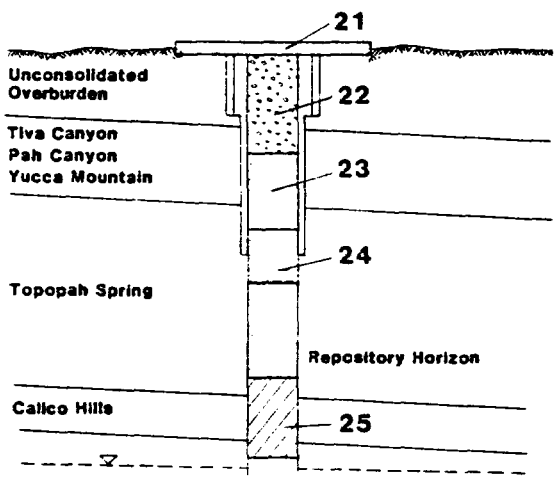

Component	Desirable Properties
21 - Borehole Cover	• Design TBD, to control surface flow into the borehole
22 - Surface Core	• Low porosity (5% to 10%) • Permeability TBD, to control surface flow into the borehole
23 - Fill	• High permeability, few fines • Graded to reduce settlement
24 - Settlement Plug (only if necessary)	• Design TBD, to allow passage of water to bottom of shaft • Strength dependent on the load carried; tradeoff possible between spacing, material properties, and designs
25 - Seal	• Permeability less than the effective permeability of the Tuffaceous Beds of Calico Hills • Remove casing if possible

Figure 21. Sealing Concept Proposed for Borehole Sealing

Conclusions

The primary conclusion from the preceding sections is that sealing concepts have been developed as the basis for future planning, design, and evaluation of sealing components. These concepts are based on the current understanding of the hydrogeology at Yucca Mountain, hydrologic calculations, preliminary repository concepts, functional requirements and performance criteria, and borehole construction. From the hydrologic calculations some performance-related conclusions are reached:

- The lower shaft and the drift floors appear to be capable of dissipating water that may enter the shaft or drift. Therefore the potential for water contacting the waste packages is reduced.
- From a hydrologic viewpoint, backfilling a repository in unsaturated tuff is not essential. Based on continuum analysis, changing the backfill from a clay to a sand does little to alter the flow past vertically or horizontally emplaced waste packages.
- If backfilling the underground facility, shafts, or ramps is desirable for structural, environmental, or other reasons, a coarse-grained material should be used because of its capacity to act as a capillary barrier. This conclusion is supported by a similar conclusion reached by Mondy and Baker (1983), i.e.. sand can be modeled as an impermeable barrier for the pressure regimes anticipated for matrix flow in unsaturated tuff.
- Finally, because the sealing concepts are dependent on numerous ground-water flow assumptions, it is concluded that additional work will be required during site characterization of Yucca Mountain to evaluate water flow conditions and to modify the performance criteria, if necessary.

APPENDIX A

Description of the Hydrogeologic Setting

Various hydrogeologic studies were reviewed in the early stages of the development of the sealing concepts in order to understand the possible flow mechanisms in the unsaturated zone. The Yucca Mountain stratigraphy and the nature of fracturing of tuff units are summarized from these studies and are presented below. Results from borehole studies conducted primarily in Yucca Mountain are presented to illustrate the highly transmissive nature of the Topopah Spring Member under saturated conditions. Additionally, limited studies within tunnel complexes on the Nevada Test Site are described to illustrate the nature of flow in saturated, zeolitic-bedded tuff. This understanding of the basic geology and the observed behavior of saturated flow in welded and zeolitic-bedded tuff are then used to arrive at the possible flow mechanisms in the unsaturated zone of Yucca Mountain. The environmental assessment for the NNWSI Project provides a more complete description of the hydrogeology at Yucca Mountain.

The stratigraphy of Yucca Mountain consists of continuous ash-flow and ash-fall tuffs. Major stratigraphic units and partial geologic and hydrologic characteristics are listed in Table A1. Scott et al (1983) have separated the tuffaceous units at Yucca Mountain into two categories based on physical rather than petrographic properties:

- Densely welded, low-porosity, but highly fractured units with high hydraulic conductivity; e.g., the densely welded portions of the Tiva Canyon and Topopah Spring Members
- Nonwelded, porous, zeolitized, but relatively nonfractured units with low hydraulic conductivity; e.g., portions of the Tuffaceous Beds of Calico Hills.

Recent laboratory work (Blair et al, 1984) has defined an additional category:

- Nonwelded, porous, vitric, but relatively nonfractured units with high hydraulic conductivity; e.g., portions of the Tuffaceous Beds of Calico Hills in well USW GU-3, and portions of the Pah Canyon and Yucca Mountain Members.

Jointing and fracturing within welded tuff is predominantly vertical; however, departure from the vertical is possible (Ross and Smith, 1961). This vertical orientation is demonstrated in the following wells:

- UE-25a#1, where the preferred dip of joints in the Topopah Spring Member and the Tuffaceous Beds of Calico Hills is 80° to 90° from the horizontal (Spengler et al, 1979).
- USW GU-3 and USW G-3, where the average dip of faults is 73° SW and of fractures is 81° SW.
- USW G-1, where the majority of the measured joints in the Topopah Spring Member are between 70° and 90° (Spengler et al, 1981).

A positive correlation between the degree of welding and the number of fractures has been observed within the Yucca Mountain area from wells USW GU-3/G-3 (Scott and Castellanos, 1983), USW G-1 (Spengler et al, 1981) and UE-25a#1 (Spengler et al, 1979). From wells USW GU-3/G-3 the fracture frequency of densely welded tuff ranges from 20 to 40 fractures/m^3, and for zeolitized nonwelded and partially welded tuff it ranges from 1 to 3 fractures/m^3 (Scott et al, 1983).

Two basic mechanisms for flow through unsaturated tuffs of Yucca Mountain can be inferred from the description of tuff given above: flow through the vertical fractures and flow through the tuff matrix. Fracture flow in the densely welded, highly fractured tuff is observed at several locations within the saturated zone on the Nevada Test Site. The highly transmissive nature of the Topopah Spring Member was observed at well J-13 (Winograd and Thordarson, 1975; Thordarson, 1983), located in Jackass Flats (an area not considered for the repository). A similar situation was noted for welded tuff in Pahute Mesa (Thordarson, 1965).

Large losses of drilling fluid were experienced while drilling wells USW G-1 (Spengler et al, 1981) and USW H-1 (Rush et al, 1983). Circulation losses also occurred in wells UE-25a#1, USW GU-3/G-3, and USW G-4. While well U12b.04 on Rainier Mesa was being drilled, circulation was maintained in the

friable-bedded vitric tuff but was lost in the densely welded, highly-fractured tuff (Thordarson, 1965). Because of the high frequency and dip of joints and the low matrix permeability of densely welded tuff, it is likely that flow through fractures was the cause for the loss of circulation.

Observations of ground water in tunnel complexes in Rainier Mesa (Thordarson, 1965) also illustrate the potential and nature of flow through a fractured tuff where the matrix is fully saturated or near full saturation. Some of these observations associated with mining of the U12e tunnel complex, which penetrated into a perched water system, are:

- The only freely moving water observed in miles of underground tunnels occurred in fractures, usually fault zones.
- Most of the fracture water encountered in the U12e tunnel system came from 50% to 60% of the 110 faults mapped. Less than 2% of the estimated 5000 joints mapped yielded the remainder of the water.
- Maximum discharge from faults/fractures occurred immediately, followed by a gradual decline in flow with a final discharge described as small seeps or drips.
- Most of the fractures drained completely within several months; however, some dripped for two years or more.

Additional observations (Thordarson, 1965; Winograd and Thordarson, 1975), associated with flow in zeolitic-bedded tuff in Pahute and Rainier Mesas, may enhance the understanding of the hydrologic properties of the Tuffaceous Beds of Calico Hills, which are also highly zeolotic. These observations include:

- A lack of fracture interconnectivity, indicated by the irregular surface of the perched water table, the peak initial discharges, and a rapid drainage of fracture systems as tunneling advanced.
- The general absence of water on the walls of E-tunnel, together with the lack of water draining in horizontal boreholes in the U12e main drift, suggested that pressures were not large enough to force water into the larger void space.
- Two chambers excavated beneath the Pahute Mesa in a tuff aquitard, located 305 m and 610 m beneath the regional water table, yielded little (chamber walls were damp to wet) to no water flow through the matrix, respectively. For both chambers the majority of water occurred through microfractures.

It is evident from these studies associated with the saturated zone that under fully saturated conditions: (1) fracture flow dominates if the matrix permeability is low compared to the fracture permeability, and (2) the tuff matrix generally has a higher potential to retain water than the fracture. It is postulated from the studies described above that for the unsaturated zone two types of flow are possible: ubiquitous matrix flow and localized fracture flow when the percolation rates are greater than the saturated hydraulic conductivity of the matrix. Therefore, matrix flow was assumed in the shaft and drift analyses to represent locations within the underground facility where localized fracture flow does not occur. Fracture flow was assumed where saturated conditions could occur, i.e., at the base of the shaft and through the floor of an access and emplacement drift where a discrete, water-producing fault or fracture zone is encountered.

Table A1. Generalized Stratigraphy and Saturation Levels for Various Stratigraphic Units at Yucca Mountain*

Stratigraphic Unit	General Comments†	Saturation (%)**
Surficial Deposits (Hoover et al, 1981)	Includes fluvial and eolian deposits and debris flows	—
Paintbrush Tuff		
Tiva Canyon Member	Almost entirely densely welded tuff, generally thickens to the south; highly fractured	33 – 50
Yucca Mountain Member Pah Canyon Member	Relatively thin compared to Tiva Canyon or Topopah Spring Members; composed of nonwelded to partially welded ash-flow tuffs; generally confined to the northern part of Yucca Mountain, pinches out to southeast; may pinch out before reaching UE-25a#1	61 – 90
Topopah Spring Member	Composed predominantly of densely welded tuff; thickest stratigraphic unit at Yucca Mountain; highly fractured; portions comprised of varying percentage of lithophysae; overlies ash-fall and reworked tuff	17 – 91
Tuffaceous Beds of Calico Hills	Composed of massive, homogeneous, nonwelded ash-flow tuff units separated by thin units of ash-fall and reworked tuffs; highly zeolitized; generally thins to the southeast; overlies ash-fall and reworked tuffs and tuffaceous sand stone	82 – 100
Crater Flat Tuff		
Prow Pass Member	Partially welded; lowly zeolitized; top and bottom parts commonly altered to clay and zeolite; overlies ash-fall tuff and tuffaceous sediments, nonwelded to partially welded	~100††
Bullfrog Member	Partially to densely welded zone enclosing a moderately welded core; upper part of unit partially altered to clay and (or) zeolite; lower portion slightly altered to clay overlies leveled and reworked tuff at base	~100††
Tram Unit	Partially to moderately welded ash-flow tuff; zeolitic and clay minerals greatly increase towards the bottom of the unit	~100††

*Compiled from information contained in Scott et al (1983), Spengler et al (1979), and generalized stratigraphic logs unless otherwise noted.
**Preliminary information, subject to change.
†Bedded and reworked tuffs generally separate stratigraphic units.
††Assumed values below the static water level.

APPENDIX B

Borehole Conditions and Associated Geologic Information (August 1983)

LEGEND FOR THE GEOLOGIC LOGS

nonwelded to partially welded tuff

moderately welded tuff

densely welded tuff

bedded tuff

vitrophyre

flow breccia

alluvium

~ lost returns

Table B1. Borehole Status as of August 8, 1983

Well	Location[1,2] North	Location[1,2] East	Surface Elevation[2] (ft)	Total[3] Vertical Depth (ft)	Measured[3] Depth (ft)	Drilled[2] Depth (ft)	Drill Hole Deviation[3] Bearing	Drill Hole Deviation[3] Distance (ft)	Circulating Media[2]	Water Table Elevation[4] (ft)
UE-25a#1	764,900	566,350	3932.8	2477.37	2483	2501	S 59° 56′W	141.68	Bentonite Mud,[5] Polymer Mud[6]	2393
UE-25a#4	767,969	564,479	4101.1	NA[7]	NA	500	NA	NA	Air-Foam,[8] Bentonite Mud	—[9]
UE-25a#5	766,954	564,756	4057.1	NA	NA	487	NA	NA	Revert Mud, Bentonite Mud	—
UE-25a#6	765,898	564,496	4052.7	NA	NA	500	NA	NA	Bentonite Mud	—
UE-25a#7	766,243	565,466	4005.1	NA	NA	1002	NA	NA	Air-Foam, Bentonite Mud	—
UE-25b#1	765,244	566,417	3938.2	3928.03	3950	4002	S 73° 51′W	332.30	Air-Foam	2394
USW H-1	770,254	562,388	4272.4	5847.23	5850	6000	S 68° 20′ 14″W	96.86	Air-Foam	2394
USW H-3	756,542	558,452	4866.7	3973.51	3975	4000	N 71° 35′ 52″W	84.85	Air-Foam	2392
USW H-4	761,643	563,911	4097.3	3979.39	3980	4000	N 69° 46′ 43″W	43.41	Air-Foam	2395
USW H-5	766,634	558,909	4846.2	3974.5[11]	3975	4000	S 52° 9′ 49″W	41.65	Air-Foam	2538
USW H-6	763,299	554,075	4270.6	NA	NA	4002	NA	NA	Air-Foam	2559
USW G-1	770,500	561,000	4348.6	1014.8	1015	6000	S 3° 48′ 35″W	12.77	Bentonite Mud, Air-Foam, Polymer Mud	2472
USW G-3	752,780	558,483	4856.3	4887.94	4990	5031	S 83° 8′ 15″W	674.21	Air-Foam, Polymer Mud	NA
USW GU-3	752,690	558,501	4856.3	2611.68	2616	2644	S 27° 59′ 46″W	125.81	Polymer Mud, Bentonite Mud	NA
USW G-4	765,807	563,082	4166.6	2959.6	2975	3003	S 57° 10′ 34″W	258.9	Air-Foam	2391[10]
USW WT-1	753,941	563,739	3942.8	1623.85	1625	1680	S 19° 7′W	53.18	Air-Foam	2408
UE-25 WT#2	760,661	561,924	4269.7	1998.1	2000	2060[6]	S 40° 27′W	79.65	Air-Foam	2392
UE-25 WT#4	768,512	568,040	3826.4	1538.38	1540	1570	S 51° 23′W	61.27	Air-Foam	2391
USW WT-7[12]	755,571	554,071	3926.3	NA	NA	NA	NA	NA	Air-Foam	NA
USW WT-8[12]	762,257	557,146	4272.3	NA	NA	NA	NA	NA	NA	NA
USW WT-9[12]	769,723	557,322	4471.6	NA	NA	NA	NA	NA	NA	NA
USW UZ-1	771,276	560,221	4426.6	NA	NA	NA	NA	NA	Air Reverse Vacuum	—
USW UZ-4[12]	769,157	563,328	NA	NA	NA	NA	NA	NA	NA	—
USW UZ-5[12]	768,913	562,925	NA	NA	NA	NA	NA	NA	NA	—
UE-25p#1	755,482	570,599	3654.1	5916.70	5923	NA	S 3° 7′E	136.98	NA	2394[13]

(1) Nevada State Coordinate System Central Zone given in feet (1 foot = 0.3048 m).
(2) From Fenix & Scisson, Inc; hole history data sheets.
(3) From gyro multi-shot survey by Eastman Whipstock.
(4) Personal communication with Jim Robison, US Geological Survey, Denver, August 1983; preliminary information subject to change.
(5) Wyoming bentonite.
(6) All-purpose liquid polymer Adomite WFR-2 by Nalco Chemical Co.
(7) NA – Not Available.
(8) Air, water, Turco detergent.
(9) "—" Not Applicable.
(10) From Spengler and Muller, 1983; preliminary data subject to change.
(11) Top of casing.
(12) Currently not drilled and preliminary information subject to change.
(13) Water-table estimated from packer tests on Tertiary tuff formations; casing extends into Paleozoic carbonates.

UE-25a#1

HOLE CONDITION

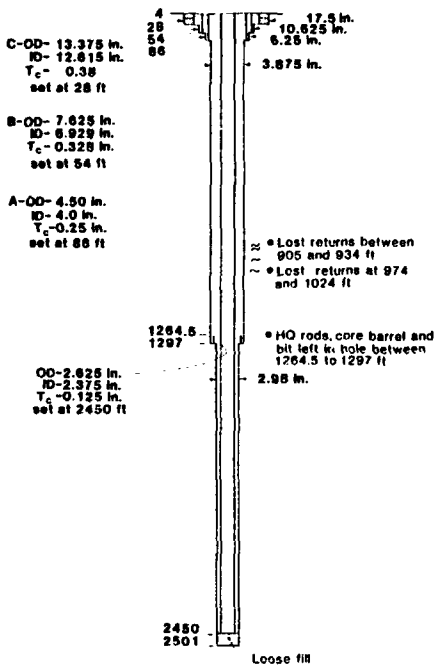

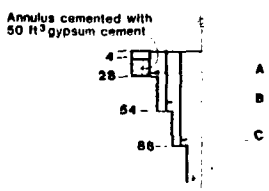

UE-25b#1

HOLE CONDITION

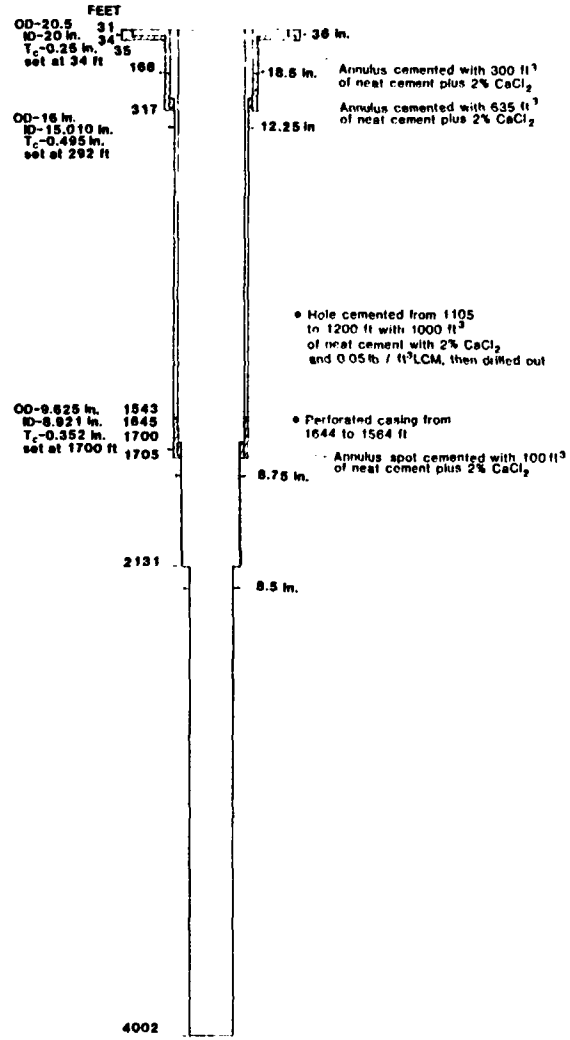

UE-25a#1/UE-25b#1

GENERAL STRATIGRAPHIC LOG

(Modified from Spengler, et al, 1979, OFR 79-1244 and Bish,et al, 1983,LA-9321-MS)

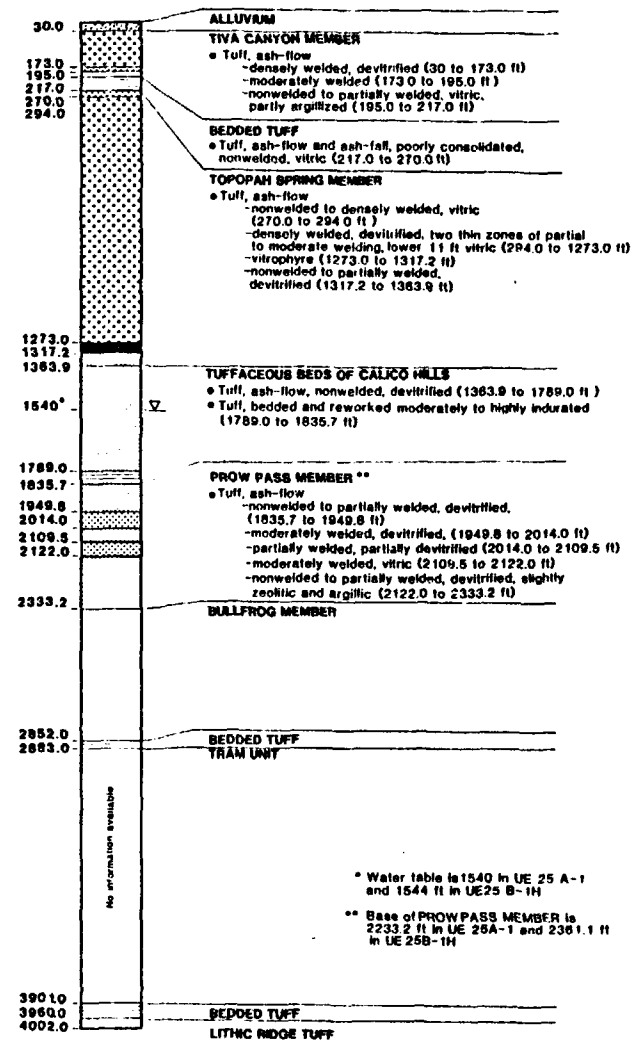

* Water table is 1540 in UE 25 A-1 and 1544 ft in UE25 B-1H

** Base of PROW PASS MEMBER is 2233.2 ft in UE 25A-1 and 2361.1 ft in UE 25B-1H

UE-25a#4

HOLE CONDITION

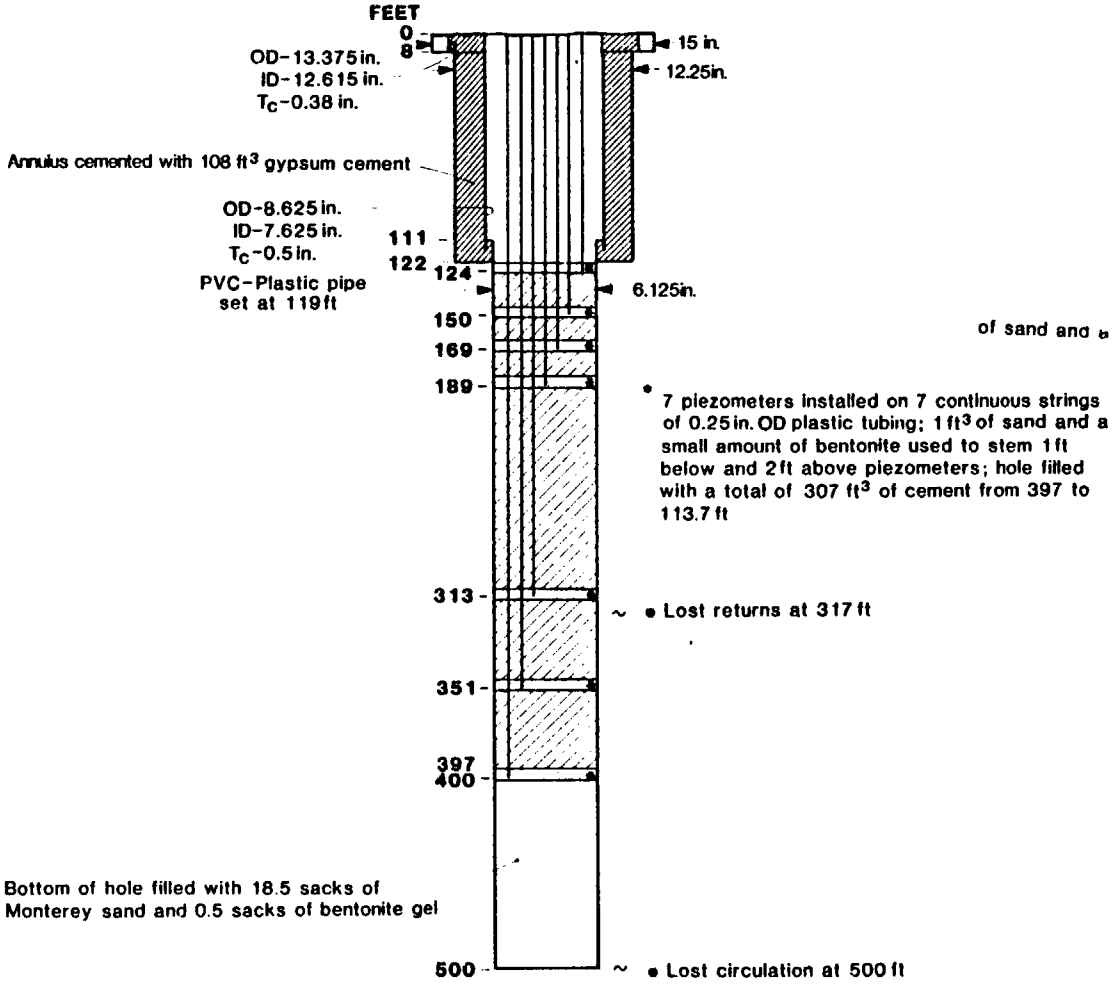

GENERALIZED STRATIGRAPHIC LOG

(Modified from Spengler and Rosenbaum, 1980, OFR 80-929)

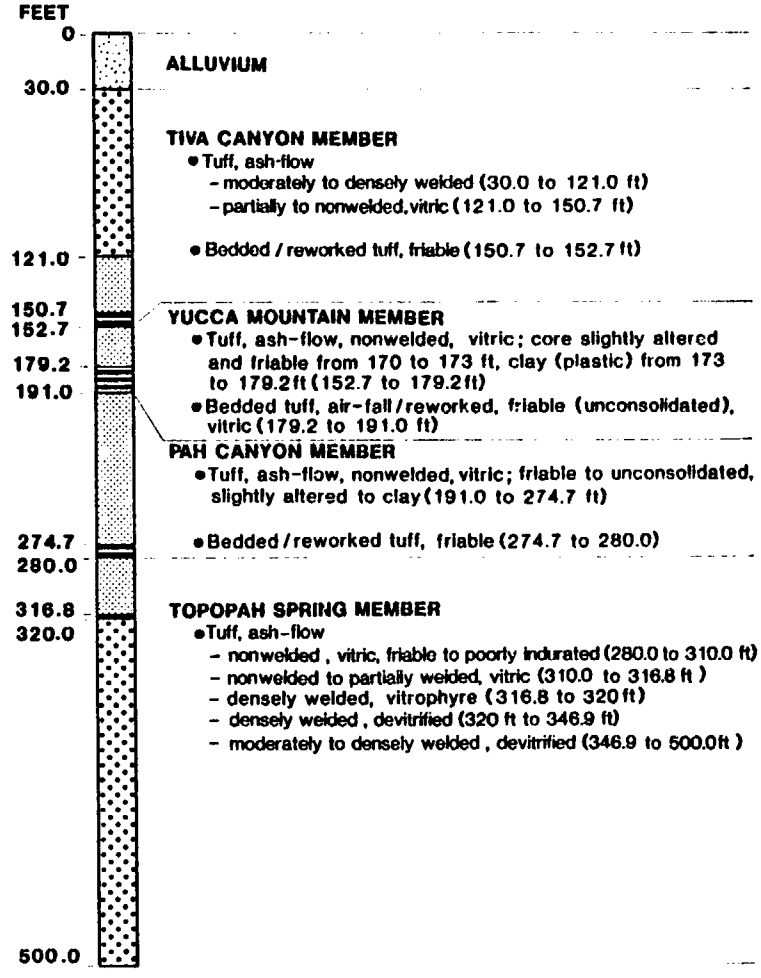

UE-25a#5

HOLE CONDITION

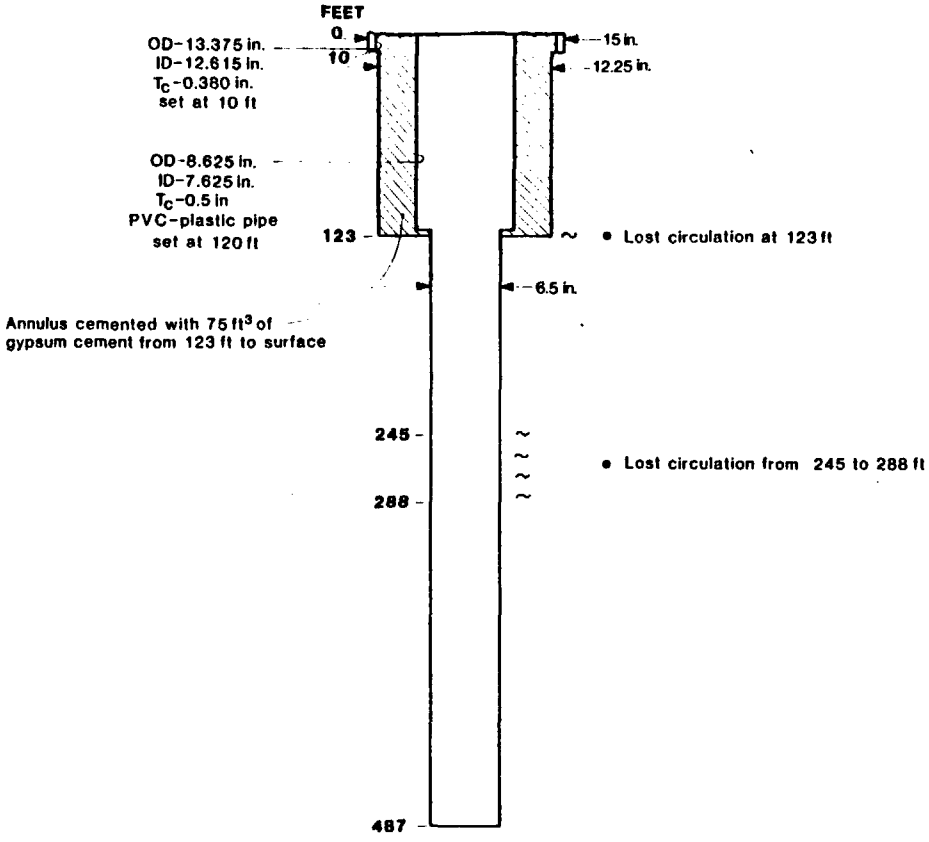

GENERALIZED STRATIGRAPHIC LOG

(Modified from Spengler and Rosenbaum, 1980, OFR 80-929)

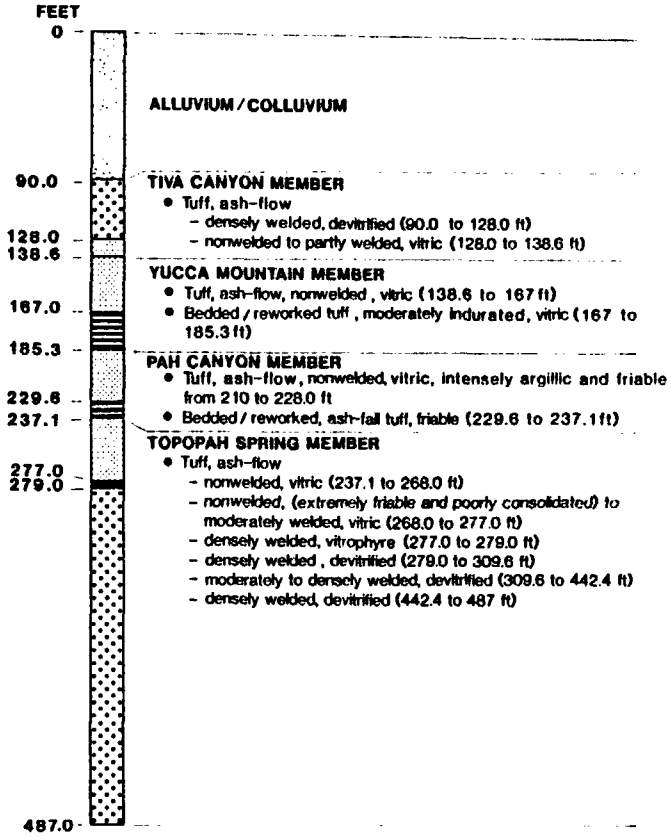

UE-25a#6

HOLE CONDITION

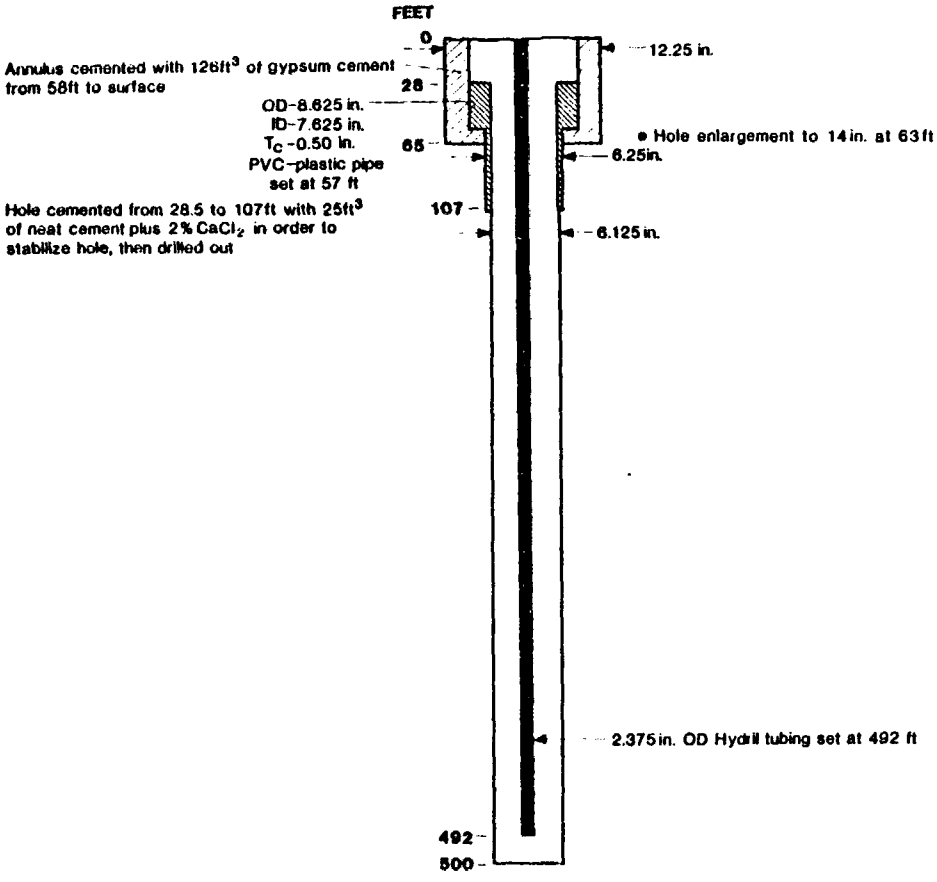

GENERALIZED STRATIGRAPHIC LOG

(Modified from Spengler and Rosenbaum, 1980, OFR 80-929)

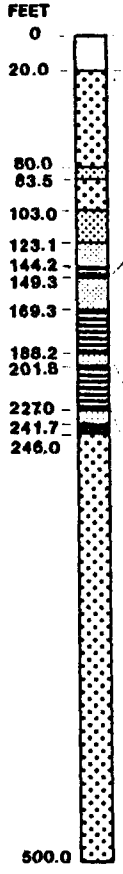

ALLUVIUM

TIVA CANYON MEMBER

- Tuff, ash-flow
  - densely welded, devitrified (20.0 to 80.0 ft)
  - moderately welded, devitrified (80.0 to 83.5 ft)
  - densely welded, devitrified (83.5 to 103.0 ft)
  - partially to moderately welded, devitrified (103.0 to 123.1 ft)
  - nonwelded to partially welded (123.1 to 144.2 ft)
- Bedded/reworked tuff, poorly consolidated, friable (144.2 to 149.3 ft)

YUCCA MOUNTAIN MEMBER

- Tuff, ash-flow, nonwelded, vitric (149.3 to 169.3 ft)
- Bedded/reworked tuff
  - unconsolidated, vitric (169.3 to 172.0 ft)
  - poorly consolidated to unconsolidated (172.0 to 174.4 ft)
  - poorly consolidated (174.4 to 184.4 ft)
- Bedded, ash-fall tuff, vitric (184.4 to 188.2 ft)

PAH CANYON MEMBER

- Tuff, ash-flow, nonwelded (188.2 to 201.8 ft)
- Bedded/reworked tuff, unconsolidated (201.8 to 227.0 ft)

TOPOPAH SPRING MEMBER

- Tuff, ash-flow
  - nonwelded vitric (227.0 to 237.6 ft)
  - nonwelded to partially welded, vitric (237.6 to 241.7 ft)
  - densely welded, vitrophyre (241.7 to 246.0 ft)
  - densely welded, devitrified (246.0 to 500 ft)

UE-25a#7*

HOLE CONDITION

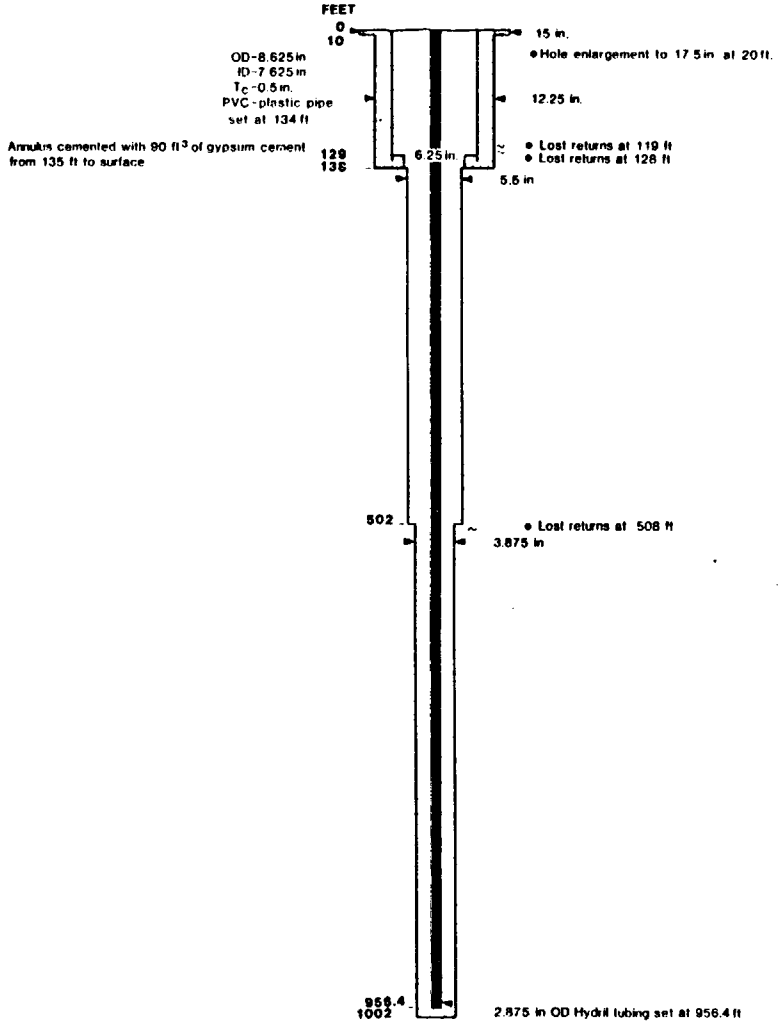

GENERALIZED STRATIGRAPHIC LOG

(Modified from Spengler and Rosenbaum, 1980, OFR 80-929)

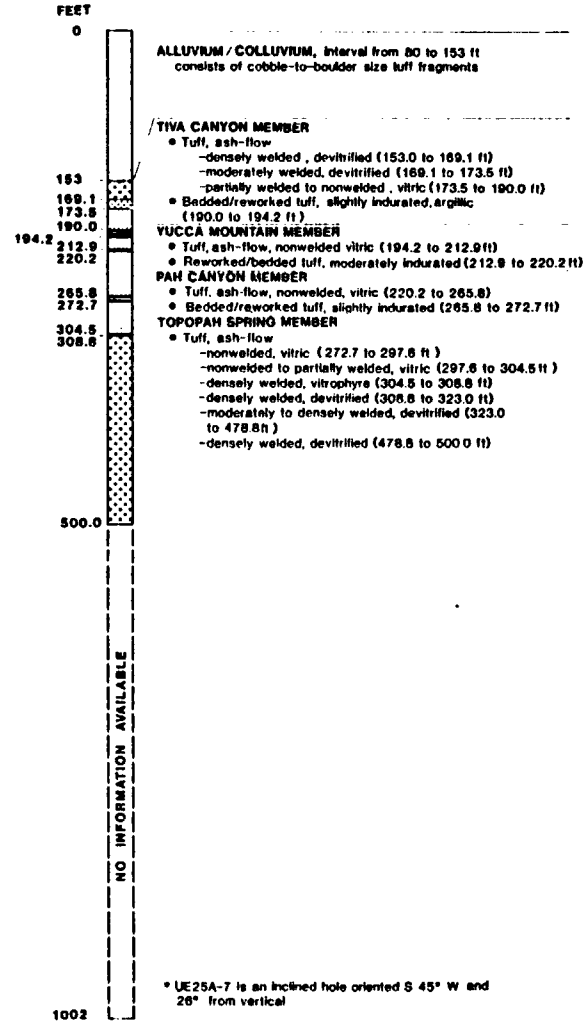

USW H-1

HOLE CONDITION

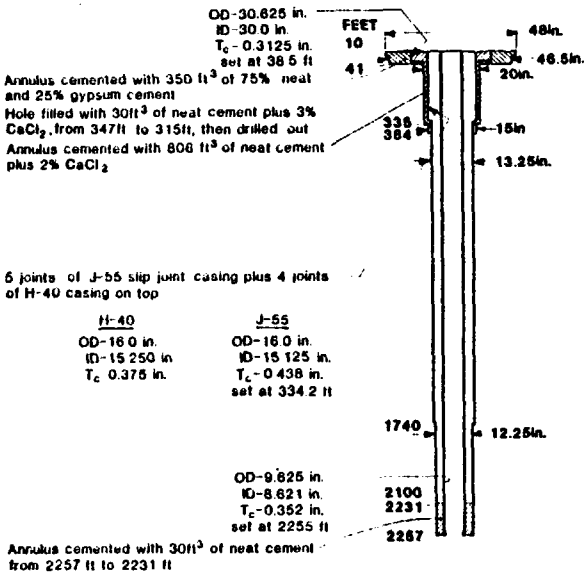

INSERT A

between 1601 and 1624	Lithic-rich tuff yielding water running down side of hole
between 1640 and 1677	Stratiform beds dripping water
between 1677 and 1726	Lithic rich tuff dripping water
between 1726 and 1749	Lithic-rich tuff yielding small stream of water
between 1775 and 1801	Few fractures, dripping water

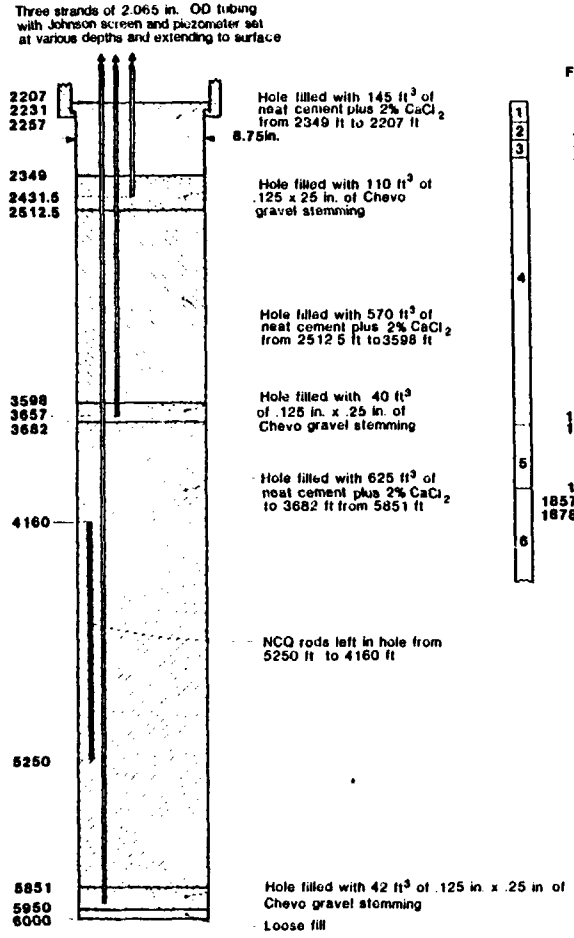

GENERALIZED STRATIGRAPHIC LOG

(Compiled from Tables 2,7, and 9 and Figure 6,Rush, Thordarson, and Bruckheimer, 1983, OFR83-141)

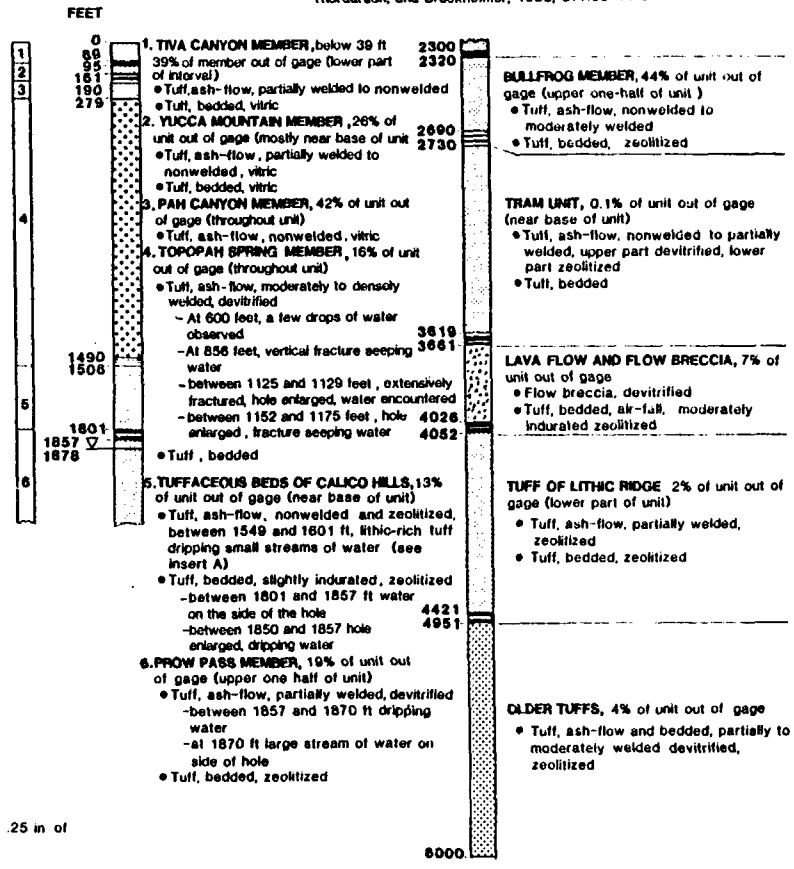

USW H-3

HOLE CONDITION

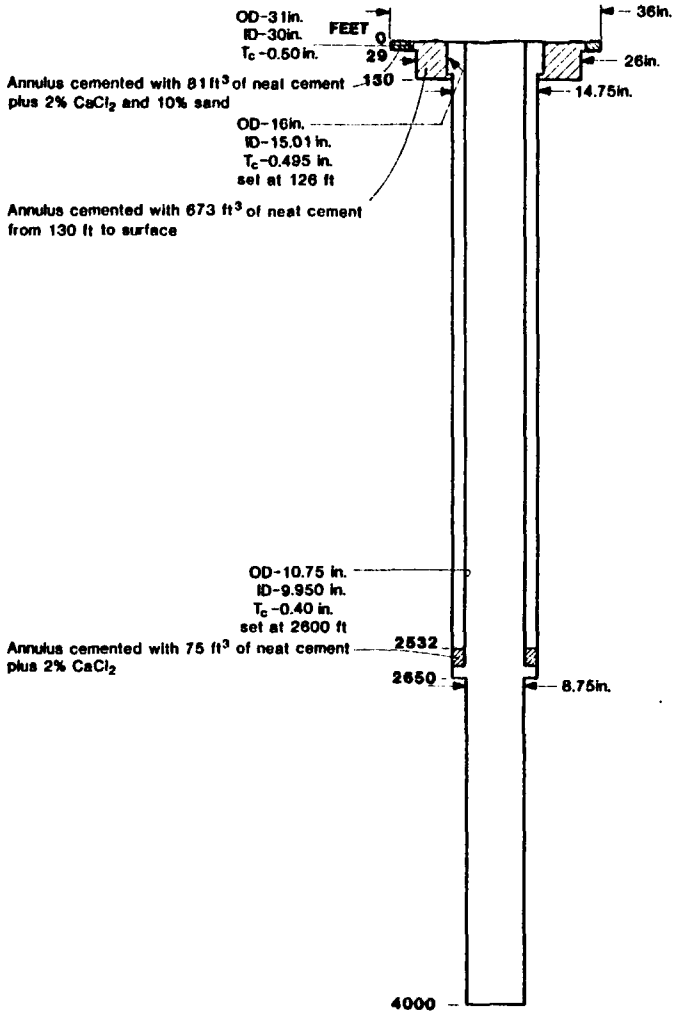

AVAILABLE GEOLOGIC INFORMATION *

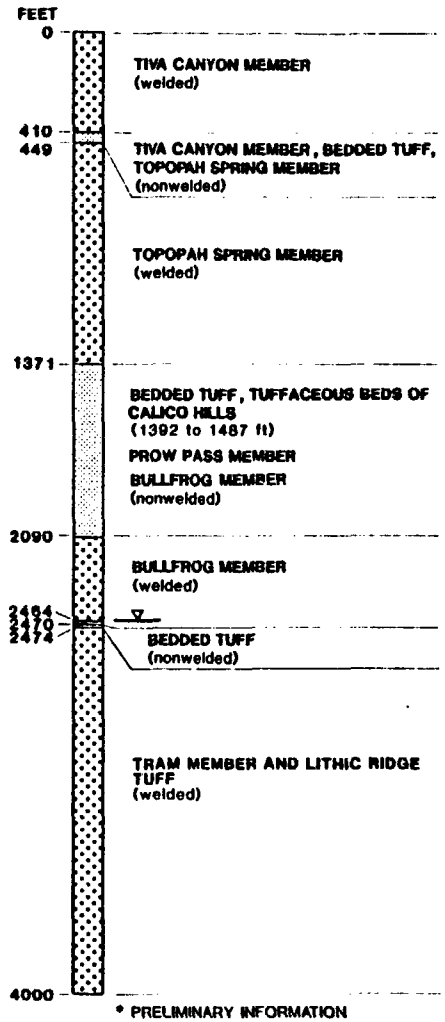

* PRELIMINARY INFORMATION SUBJECT TO CHANGE

USW H-4

HOLE CONDITION

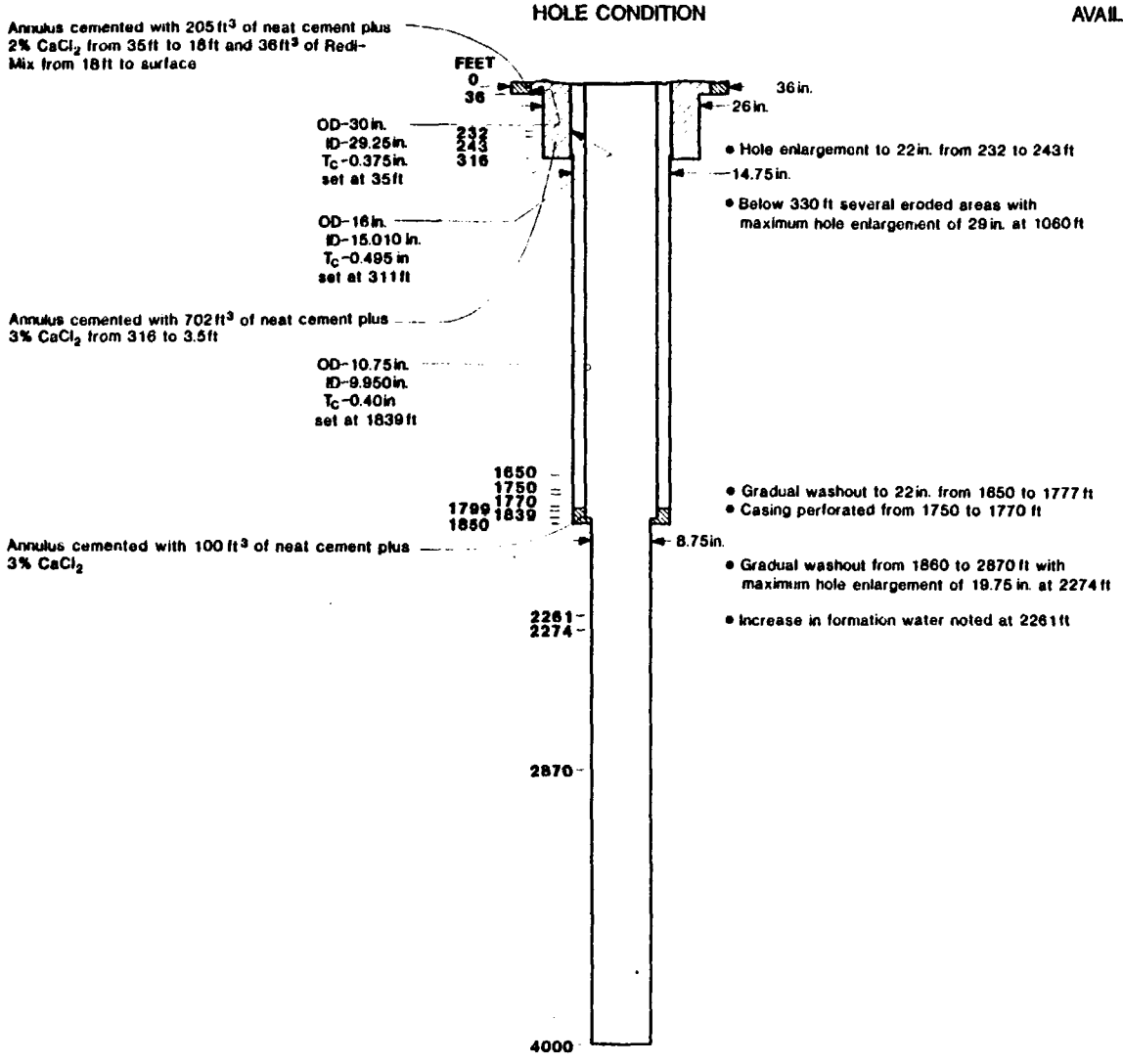

AVAILABLE GEOLOGIC INFORMATION *

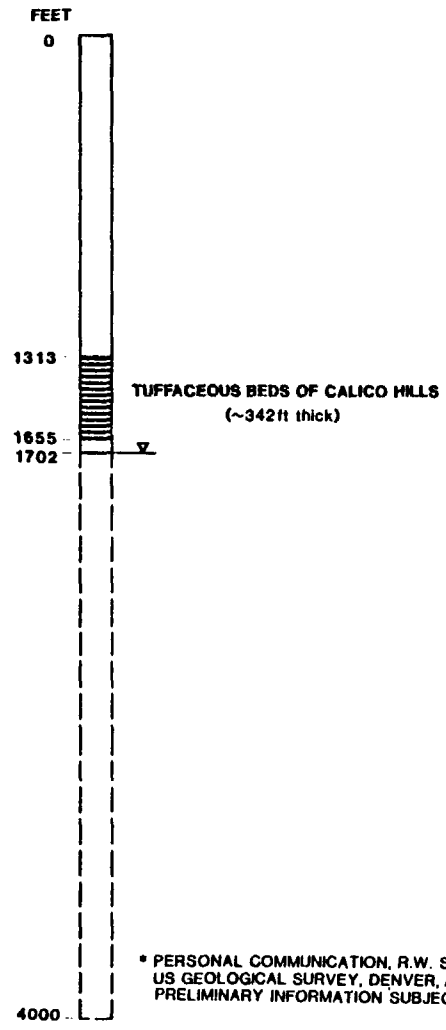

* PERSONAL COMMUNICATION, R.W. SPENGLER, US GEOLOGICAL SURVEY, DENVER, AUGUST 1983, PRELIMINARY INFORMATION SUBJECT TO CHANGE

USW H-5

HOLE CONDITION

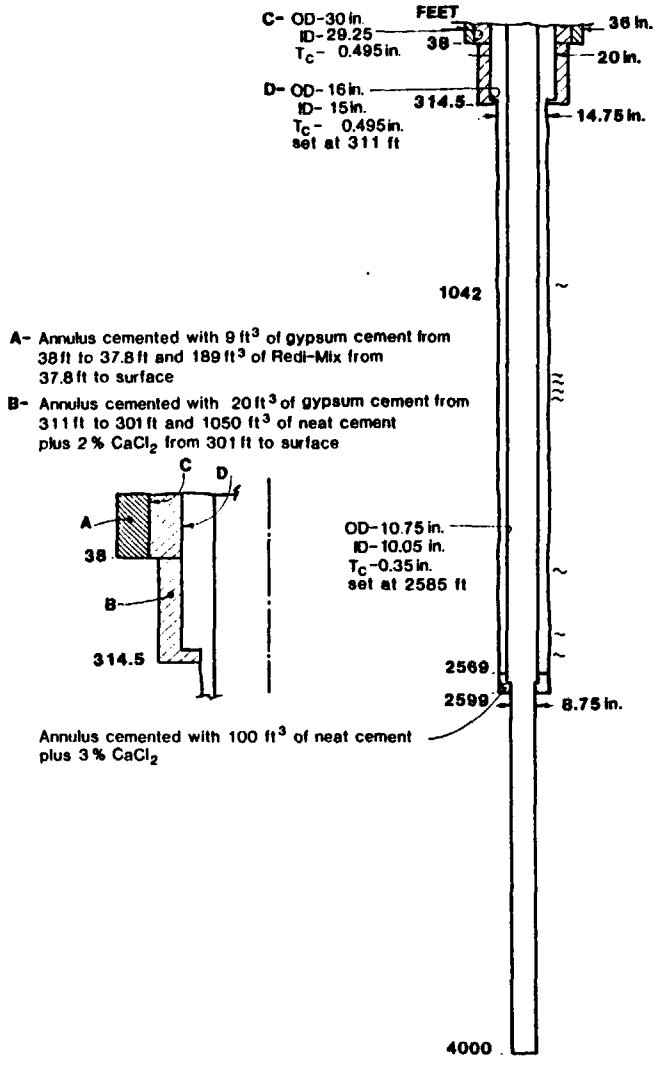

- *Hole erosion from 47 ft to 208 ft with maximum hole enlargement of 36 in. at 98 ft and 168 ft*
- Gradual wash out from 420 ft to 570 ft with maximum *hole enlargement to 24.75 in. between 486 ft to 545 ft*
- Hole erosion between 698 and 773 ft with hole enlargements of 26.5 in. at 702 ft and 33 in. at 734 ft
- Hole erosion between 800 ft and 1000 ft with hole *enlargements of 26.25 in. at 875 ft*
- Lost returns at 1005 ft
- Hole erosion between 1100 ft and 1658 ft with hole enlargement to 27.5 in. at 1134 ft
- *Lost returns at 1369 ft, regained 1476 ft*
- Gradual wash out between 1683 ft and 2496 ft with hole enlargement to 26 in. at 2481 ft
- Lost returns at 2135 ft
- Casing perforated from 2320 ft to 2565 ft
- Lost returns from 2386 ft to 2396 ft and from 2465 ft to 2475 ft
- Hole enlargements to 13 in. at 2848 ft, 14.25 in. at 3435 ft and 15.25 in. at 3604 ft

AVAILABLE GEOLOGIC INFORMATION *

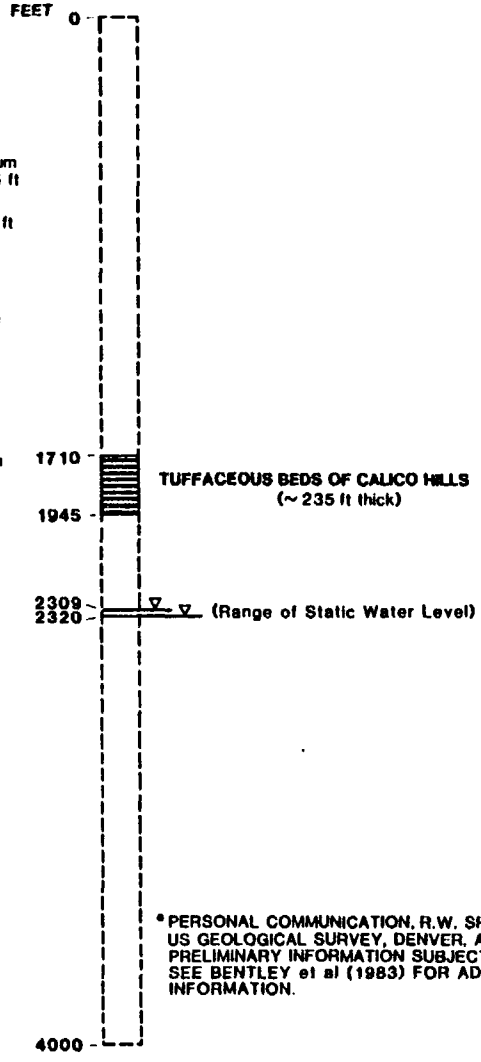

*PERSONAL COMMUNICATION, R.W. SPENGLER, US GEOLOGICAL SURVEY, DENVER, AUGUST 1983. PRELIMINARY INFORMATION SUBJECT TO CHANGE. SEE BENTLEY et al (1983) FOR ADDITIONAL INFORMATION.

USW H-6

HOLE CONDITION*

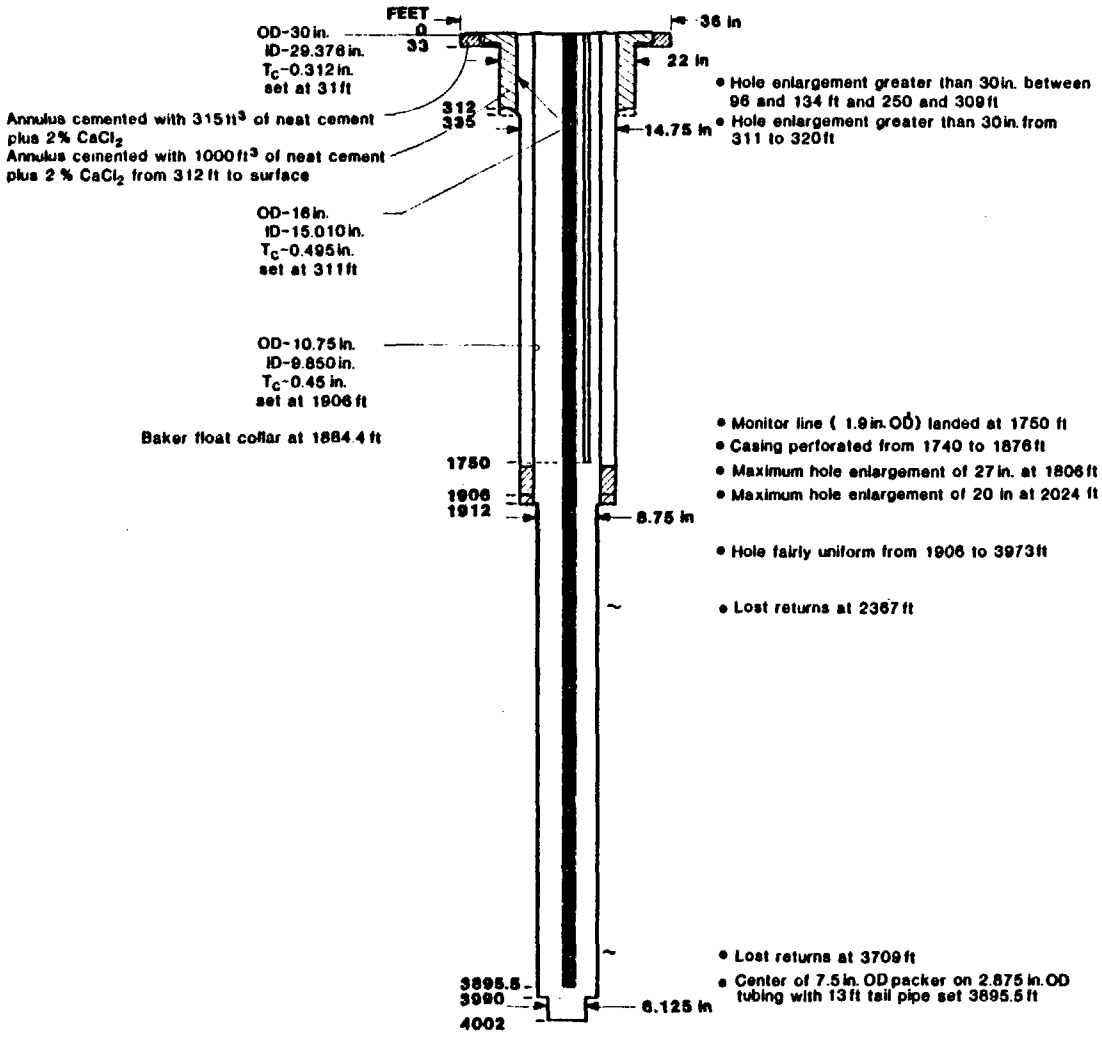

AVAILABLE GEOLOGIC INFORMATION*

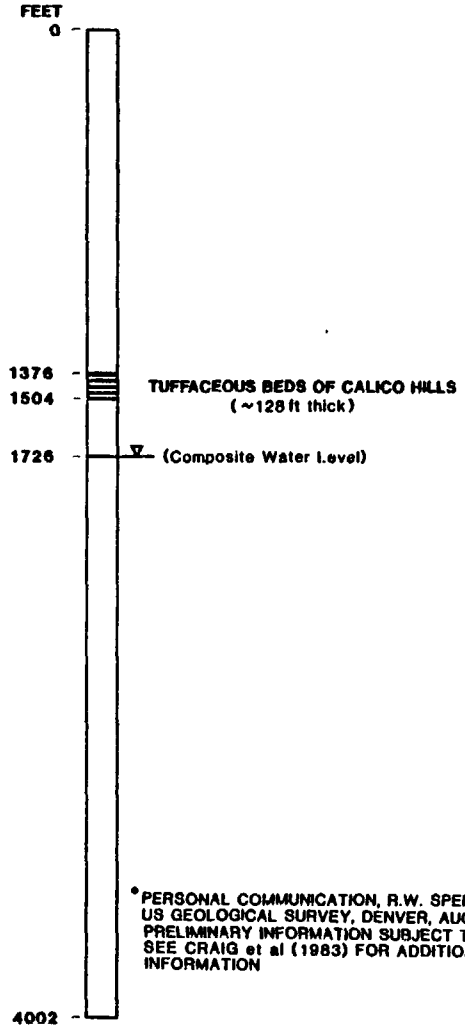

*PERSONAL COMMUNICATION, R.W. SPENGLER, US GEOLOGICAL SURVEY, DENVER, AUGUST 1983, PRELIMINARY INFORMATION SUBJECT TO CHANGE SEE CRAIG et al (1983) FOR ADDITIONAL INFORMATION

USW G-1

G-1 HOLE CONDITION

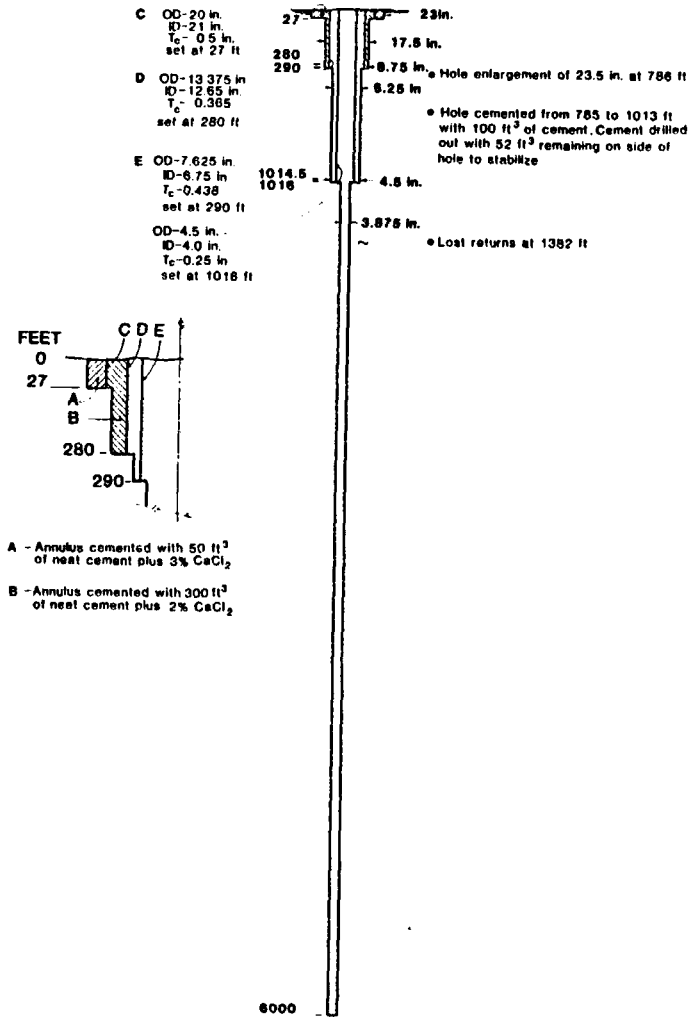

A - Annulus cemented with 50 ft³ of neat cement plus 3% $CaCl_2$

B - Annulus cemented with 300 ft³ of neat cement plus 2% $CaCl_2$

GENERALIZED STRATIGRAPHIC LOG

(Modified from Spengler, et al. 1981, OFR 81-1349)

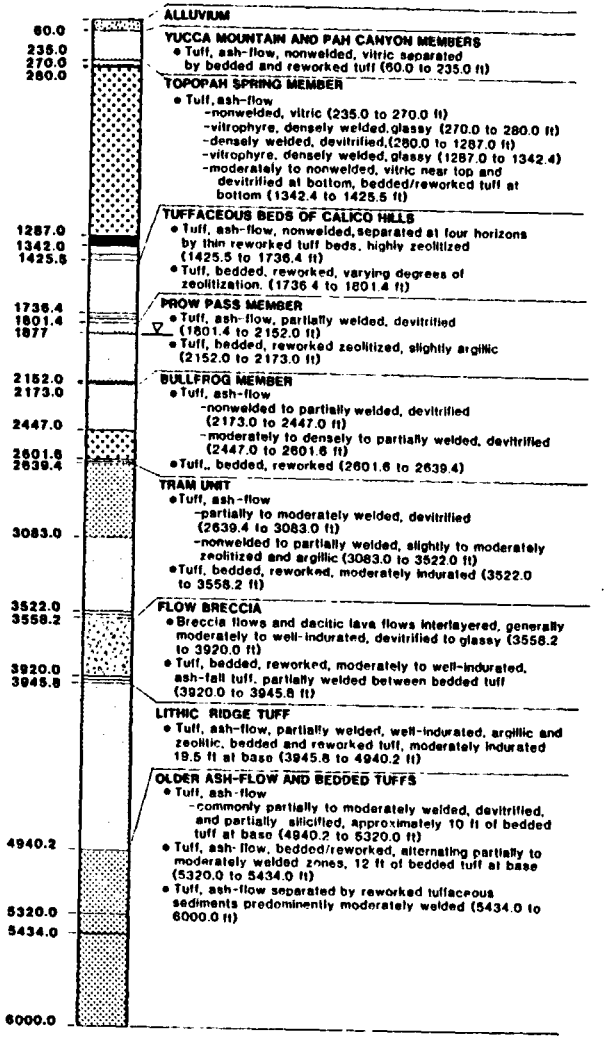

USW G-3

HOLE CONDITION

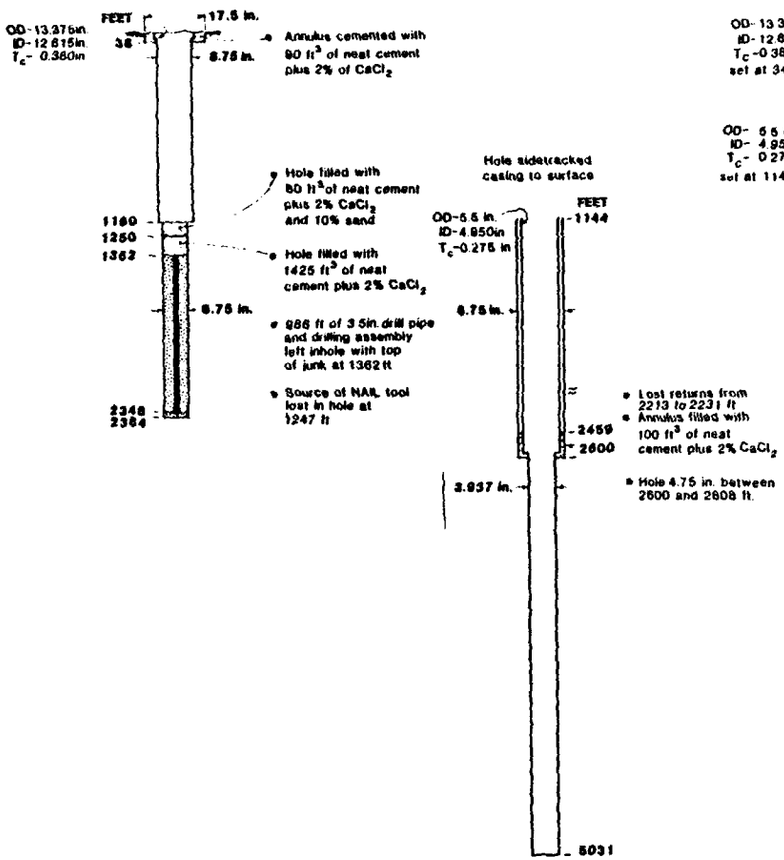

USW GU-3

HOLE CONDITION

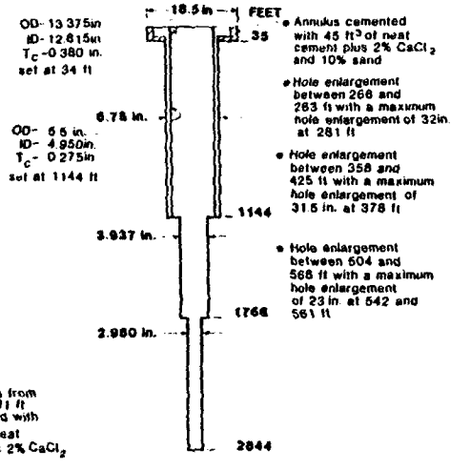

USW GU-3/G-3

GENERALIZED LITHOLOGIC LOG*

(Modified from Scott and Castellanos, 1983)

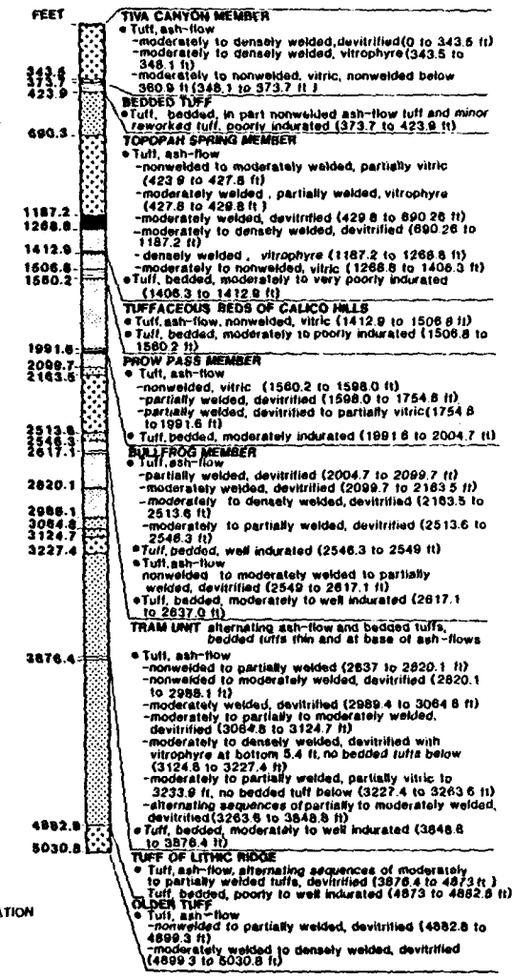

*PRELIMINARY INFORMATION SUBJECT TO CHANGE

USW G-4

HOLE CONDITION

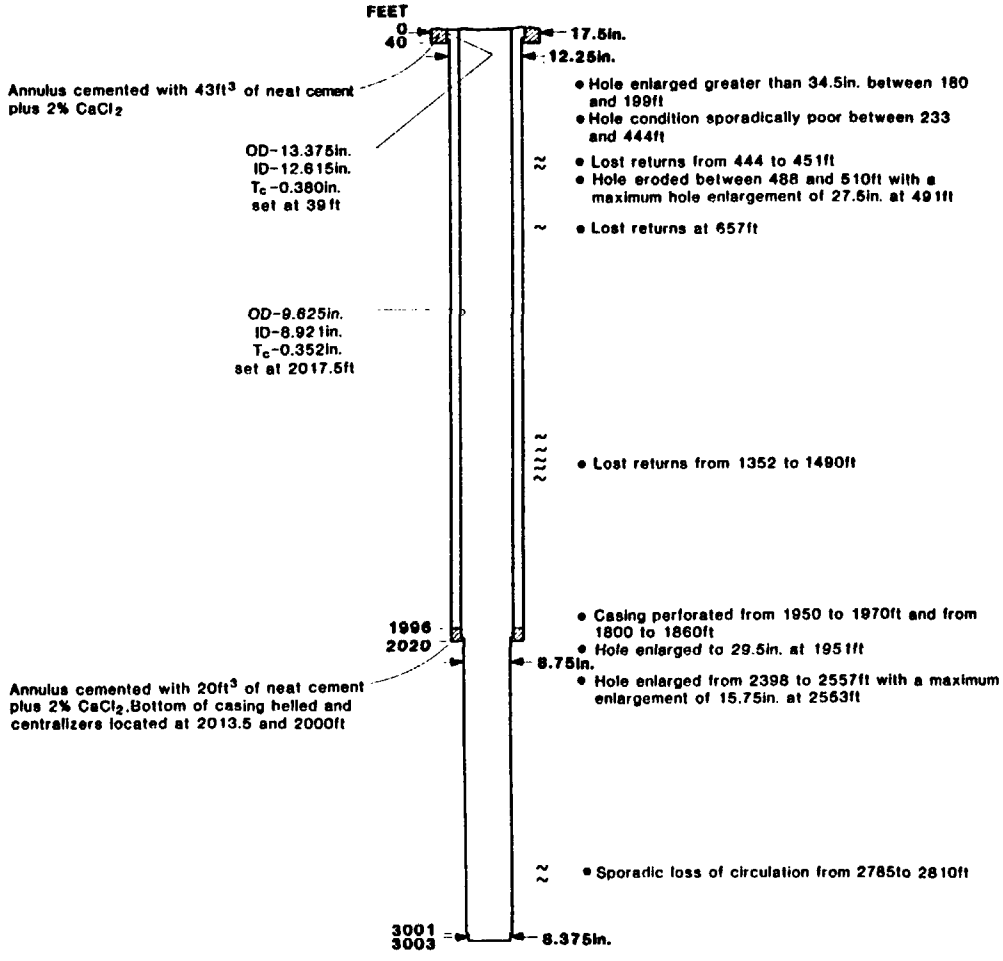

GENERALIZED STRATIGRAPHIC LOG*

(Modified from Spengler and Muller, 1983)

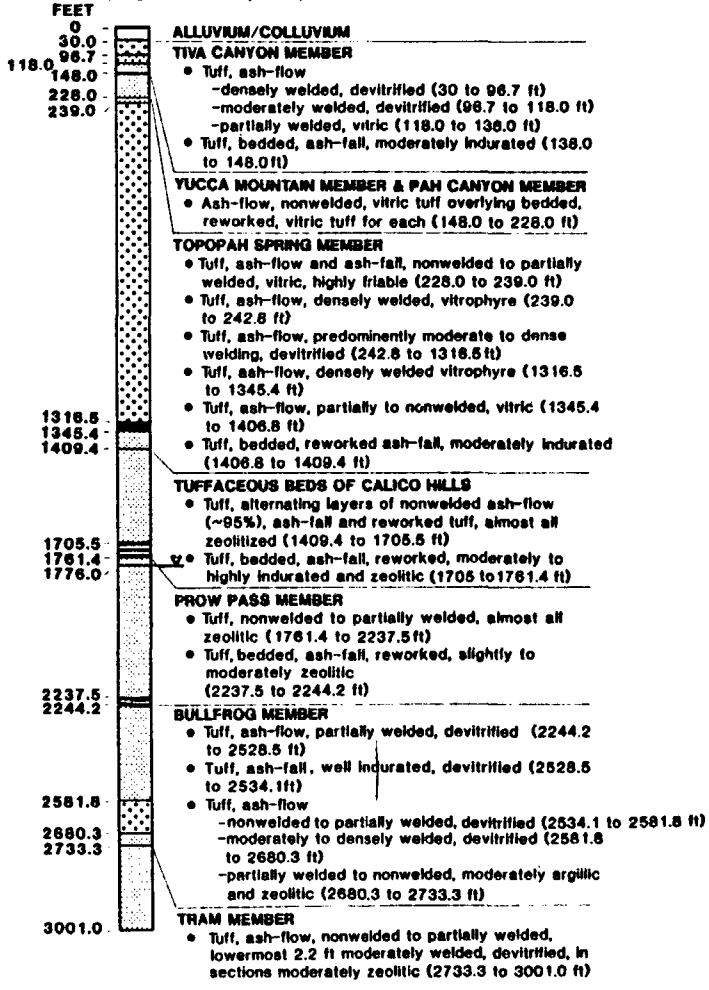

*PRELIMINARY INFORMATION SUBJECT TO CHANGE

UE-25WT#4

* HOLE CONDITION

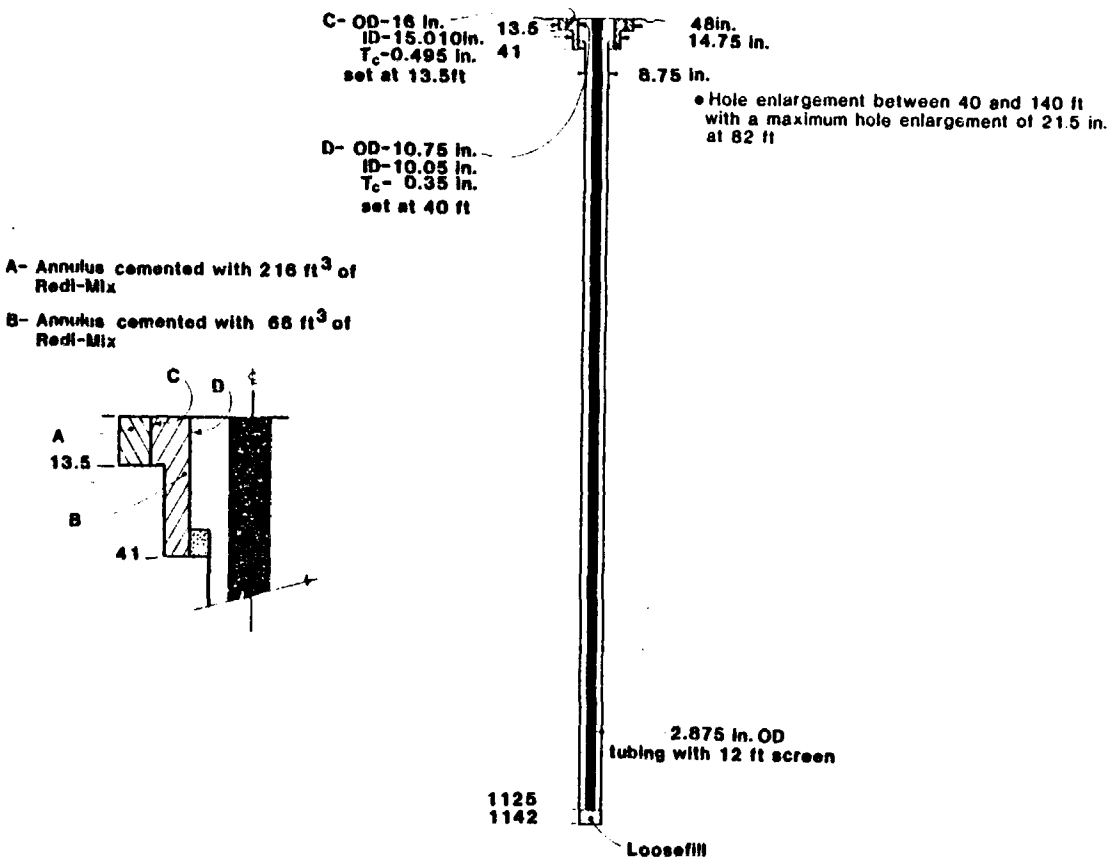

* Entire hole history not available

APPENDIX C

Description of the Preliminary Design Concepts for a Repository

The dimensions for the prospective underground facility are tentatively chosen to be

	Height × Width
Access drifts for both emplacement option	3.7 m × 6.1 m
Emplacement drifts for vertical emplacement option	6.7 m × 6.1 m
Emplacement drifts for horizontal emplacement option	4.6 m × 6.1 m

The tentative orientation of the access and emplacement drifts is N55°W and N35°E, respectively. Because the geologic structure of Yucca Mountain dips gradually to the east and the repository is currently envisioned to be located within the same portion of the Topopah Spring Member, the underground workings may be developed in a step-like manner, regardless of the emplacement mode. Raises provide the interconnection between panels at different elevations and provide ventilation. Additionally, crosscuts are periodically constructed to provide an interconnection between the ventilation, construction, and repository access drifts. The conceptual designs of typical disposal panels are illustrated in Figures C1 and C2. Because of the variability of the waste that may be emplaced in the repository, some dimensions may be changed. Dimensions associated with each panel are approximated on Figures C1 and C2.

A minimum of five access openings are currently anticipated for the mining system regardless of emplacement mode. All openings are currently located on the east side of the planned repository because of the proximity to the NTS facilities located to the east of Yucca Mountain. The diameters of the vertical shafts range in size from 3.05 to 6.7 m. They will be used for exhaust and intake ventilation and transport of men, muck, and materials. The exploratory shaft will be 4.3 m in diameter and may be used initially to develop and ventilate the repository. A waste-handling ramp, inclined 10% (5.7°), may be located east of the repository. A second, inclined 20% (11.3°), may be located in the proximity of the first ramp and may be used to remove mined materials.

The inclined ramps and the underground facility will use rock bolts, wire mesh, shotcrete, concrete liner, or steel sets, as appropriate to maintain stability. Concrete floors may be emplaced, but their emplacement will depend on the mining method selected, i.e., tunnel boring or conventional drill and blast. If a jagged tuff floor remains after conventional excavation, leveling may be required to create a smooth surface for the rubber-tired transporters.

It has not been decided which mining technique will be used for the vertical shafts. The exploratory shaft, however, will be conventionally mined and fully lined with 30.5-cm-thick, unreinforced concrete. The only steel in the concrete liner will be the hanging rods used in its construction. The brow at the repository station will be heavily reinforced with steel reinforcing bar. In addition, rock bolts will be installed at about a 45° angle around the entire circumference of the shaft at the brow location. Also, steel reinforcement will be extended from the brow up into the concrete liner above the station and a comparatively modest amount will be placed in the floor of the drift at the station. The collar of the exploratory shaft will be constructed with a steel-reinforced concrete liner, behind which will be a liner plate and periodically emplaced ring beams. Shaft outfitting steel will be attached to the shaft liner and collar.

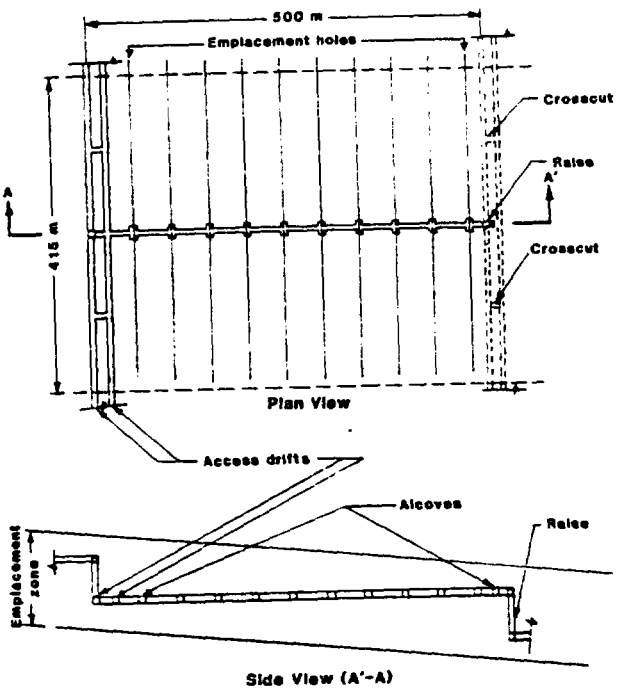

Figure C1. Typical Panel for Horizontal Emplacement of Waste Packages (modified from Dravo Engineers, Inc., 1984)

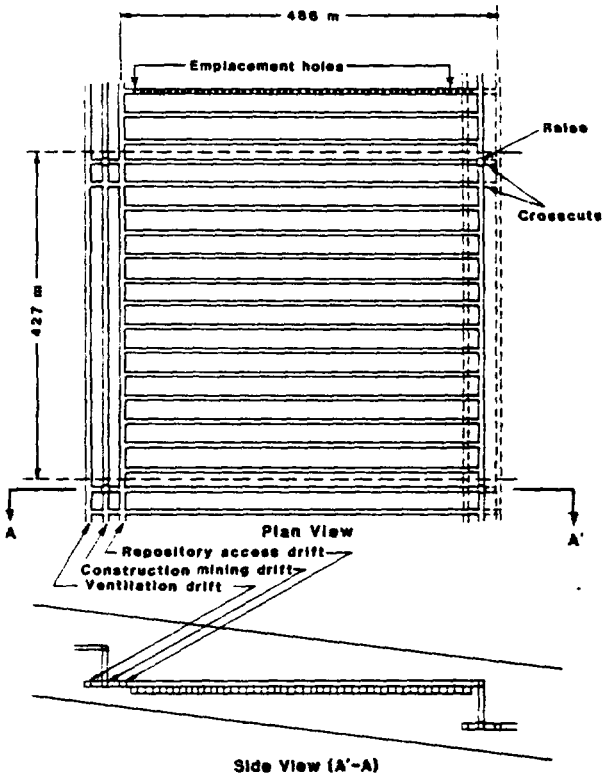

Figure C2. Typical Panel for Vertical Emplacement of Waste Packages (modified from Dravo Engineers, Inc., 1984)

APPENDIX D

Federal and State Regulations

40 CFR 960, *General Guidelines for Recommendation of Sites for Nuclear Waste Repositories*

May 7, 1984
(U.S. Department of Energy)

§960.2 "Barrier" means any material or structure that prevents or substantially delays the movement of water or radionuclides.

§960.2 "Closure" means final backfilling of the remaining open operational areas of the underground facility and boreholes after the termination of waste emplacement, culminating in the sealing of shafts.

§960.2 "Engineered barrier system" means the manmade components of a disposal system designed to prevent the release of radionuclides from the underground facility or into the geohydrologic setting. Such term includes the radioactive-waste form, radioactive-waste canisters, materials placed over and around such canisters, any other components of the waste package, and barriers used to seal penetrations in and into the underground facility.

§960.2 "Geologic repository" means a system, requiring licensing by the NRC, that is intended to be used, or may be used, for the disposal of radioactive wastes in excavated geologic media. A geologic repository includes (1) the geologic-repository operations area and (2) the portion of the geologic setting that provides isolation of the radioactive waste and is located within the controlled area.

§960.2 "Underground facility" means the underground structure and the rock required for support, including mined openings and backfill materials, but excluding shafts, boreholes, and their seals.

§960.4-1 *System Guideline.*
(a) *Qualifying Condition*
The site for the geologic repository shall allow for physical separation of radioactive waste from the accessible environment after closure in accordance with the requirements of 40 CFR Part 191, Subpart B, as implemented by the provisions of 10 CFR Part 60. The site will allow for the use of engineered barriers to ensure compliance with the requirements of 40 CFR Part 191 and 10 CFR Part 60 (see Appendix A of this Part).

§960.4-2-8 *Human Interference.*
The site shall be located such that activities by future generations at or near the site will not be likely to affect waste containment and isolation. In assessing the likelihood of such activities, the DOE will consider the estimated effectiveness of the permanent markers and records required by 10 CFR Part 60, taking into account site-specific factors, as stated in Sections 960.4-2-8-1 and 960.4-2-8-2, that could compromise their continued effectiveness.

40 CFR 191, Subchapter F – *Radiation Protection Programs, Subpart B – Environmental Standards for Disposal*

Proposed Rules, December 29, 1982
(U.S. Environmental Protection Agency)

§191.12 (b) "Barriers" means any materials or structures that prevent or substantially delay movement of the radioactive wastes toward the accessible environment.

§191.12 (c) "Disposal system" means any combination of engineered and natural barriers that contains radioactive wastes after disposal.

§191.14 *Assurance Requirements*

(b) Disposal systems shall be selected and designed to keep releases to the accessible environment as small as reasonably achievable, taking into account technical, social and economic considerations.

§191.14 *Assurance Requirements*

(c) Disposal systems shall use several different types of barriers to isolate the waste from the accessible environment. Both engineered and natural barriers shall be included. Each such barrier shall separately be designed to provide substantial isolation.

§191.15 *Procedural Requirements*
Performance assessments to determine compliance with the containment requirements of §191.13 shall be conducted in accordance with the following . . . it should be assumed that the Federal Government is committed to retaining passive institutional control of disposal sites in perpetuity. Such passive controls should be effective in deterring systematic or persistent exploitation of a disposal site, and it should be assumed that they can keep the chance of inadvertent human intrusion very small as long as the Federal Government retains such passive control of disposal sites.

10 CFR 60, *Disposal of High-Level Radioactive Waste in Geologic Repositories, Technical Criteria*

Final Rule, June 21, 1983
(U.S. Nuclear Regulatory Commission)

§60.2 "Barrier" means any material or structure that prevents or substantially delays movement of water or radionuclides.

§60.2 "Engineered barrier system" means the waste packages and the underground facility.

§60.2 "Geologic repository" means a system which is intended to be used for, or may be used for, the disposal of radioactive wastes in excavated geologic media. A geologic repository includes:

(1) the geologic repository operations area, and
(2) the portion of the geologic setting that provides isolation of the radioactive waste.

§60.2 "Permanent closure" means final backfilling of the underground facility and the sealing of shafts and boreholes.

§60.2 "Underground facility" means the underground structure, including openings and backfill materials, but excluding shafts, boreholes, and their seals.

§60.10 *Site Characterization*

(d) The program of site characterization shall be conducted in accordance with the following:

(1) Investigations to obtain the required information shall be conducted in such a manner as to limit adverse effects on the long-term performance of the geologic repository to the extent practical.
(2) The number of exploratory boreholes and shafts shall be limited to the extent practical consistent with obtaining the information needed for site characterization.
(3) To the extent practical, exploratory boreholes and shafts in the geologic repository operations area shall be located where shafts are planned for underground facility construction and operation or where large unexcavated pillars are planned.
(4) Subsurface exploratory drilling, excavation, and in situ testing before and during construction shall be planned and coordinated with geologic repository operations area design and construction.

§60.21 *Content of Application*

(ii) The assessment [of the site at which the proposed geologic repository operations area is to be located] shall contain . . .

(D) The effectiveness of engineered and natural barriers, including barriers that may not be themselves a part of the geologic repository operations area, against the release of radioactive material to the environment. The analysis shall also include a comparative evaluation of alternatives to the major design features that are important to waste isolation, with particular attention to the alternatives that would provide longer radionuclide containment and isolation.

§60.111 *Performance of the geologic repository operations area through permanent closure*

(b) Retrievability of waste. (1) The geologic repository operations area shall be designed to preserve the option of waste retrieval throughout the period during which waste are being emplaced and, thereafter, until the completion of a performance confirmation program and Commission review of the information obtained from such a program. To satisfy this objective, the geologic repository operations area shall be designed so that any or all of the emplaced waste could be retrieved on a reasonable schedule starting at any time up to 50 years after waste emplacement.

§60.112 *Overall system performance objective for the geologic repository after permanent closure*
The geologic setting shall be selected and the engineered barrier system and the shafts, boreholes and their seals shall be designed to assure that releases of radioactive materials to the accessible environment following permanent closure conform to such generally applicable environmental standards for radioactivity as may have been established by the Environmental Protection Agency with respect to both anticipated processes and events.

§60.133 *Additional design criteria for the underground facility*

(a) General criteria for the underground facility, (1) The orientation, geometry, layout, and depth of the underground facility, and the design of any engineered barriers that are part of the underground facility shall contribute to the containment and isolation of radionuclides.
(h) Engineered barriers. Engineered barriers shall be designed to assist the geologic setting in meeting the performance objectives for the period following permanent closure.

§60.134 *Design of seals for shafts and boreholes*

(a) General design criterion. Seals for shafts and boreholes shall be designed so that following permanent closure they do not become pathways that compromise the geologic repository's ability to meet the performance objectives [f]or the period following permanent closure.
(b) Selection of materials and placement methods. Materials and placement methods for seals shall be selected to reduce, to the extent practicable: (1) The potential for creating a preferential pathway for groundwater; or (2) radioactive waste migration through existing pathways.

§60.142 *Design testing*

(a) During the early or development stages of construction, a program for in situ testing of such features as borehole and shaft seals, backfill, and the thermal interaction effects of the waste packages, backfill, rock and groundwater shall be conducted.
(b) The testing shall be initiated as early as is practicable.
(c) A backfill test section shall be constructed to test the effectiveness of backfill placement and compaction procedures against design requirements before permanent backfill placement is begun.
(d) Test sections shall be established to test the effectiveness of borehole and shaft seals before full-scale operation proceeds to seal boreholes and shafts.

43 CFR 3800, Subpart 3809 — *Surface Management of Public Lands Under U.S. Mining Laws*

Final Rules, November 26, 1980
(Bureau of Land Management, U.S Department of Interior)

§3809.3.5 *Maintenance and Public Safety*
During all operations, the operator shall maintain his structures, equipment, and other facilities in a safe and orderly manner. Hazardous sites or conditions resulting from operations shall be marked by signs, fenced, or otherwise identified to alert the public in accordance with applicable Federal and State Laws and regulations.

Regulations for Drilling Water Wells
Part 14: Plugging Wells

Revised and Adopted 1981
Nevada Department of Conservation and Natural Resources

14.01 Abandoned wells must be plugged in order to:

1. Restore, as far as feasible, the controlling hydrological conditions that existed before the well was drilled and constructed;
2. Eliminate physical hazards;
3. Prevent contamination of groundwater;
4. Conserve the yield and hydrostatic head of aquifers; and
5. Prevent intermingling of desirable and undesirable waters.

§14.02 On abandonment or order of the state engineer, a well must be plugged by:

(a) Removing the casing from the well or, if it cannot be removed, by perforating or ripping it to allow the plugging fluid to penetrate the area between the casing and the inside of the borehole; and
(b) Plugging with neat cement or a high-grade bentonite product specifically designed to plug abandoned wells.

2. Neat cement is the preferred material to be used for plugging wells. The cement must be placed from the bottom upward. The cement must be of sufficient weight, but not less than 15 pounds per gallon, to prevent a flow of water into the hold from any aquifer penetrated.

3. If a well is plugged with bentonite fluid, the top 50 feet must be plugged with cement. The bentonite fluid must be circulated to the full depth of the well to prevent any water from entering the well. When the fluid is uniform after complete circulation, the viscosity must be determined and raised at least 20 seconds as measured by a Marsh funnel and must meet the following specifications:

   (a) A 10-minute gel strength of at least 20 pounds per 100 square feet; and
   (b) A filtrate volume of not more than 13.5 cubic centimeters, determined in accordance with Recommended Practice 13-B, Sections 2 and 3 (the low temperature test) of the Standard Procedure for Testing Drilling Fluids, Eighth Edition, April 1980, published by the American Petroleum Institute. A copy of this publication may be obtained for $2.00 from the American Petroleum Institute, Production Dept., 211 North Ervay, Suite 1700, Dallas, Texas, 75201.

14.03 The driller must make a report in writing to the division when a well has been plugged, together with the location of the well by section, township and range, the name of the owner of the well and a brief description of the method of plugging.

Regulations and Rules of Practice and Procedure
Part 3: Abondonment and Plugging of Oil, Gas, and Water Wells

December 1979
(Nevada Department of Conservation and Natural Resources)

300. *NOTICE*
Before beginning work for abondonment of any well, whether it is a well being drilled, an oil or gas well, water well, or so-called dry hole, notice of intention to abandon must be filed with the division and approval must be obtained. The notice must show the reason for abandonment and must be accompanied by a detailed statement of proposed work, including such information as the kind, location, and size of plugs by depth and plans for mudding, cementing, shooting, testing, and removing casing, as well as any other pertinent information. Form 4 or, in the case of wells drilled on United States Government leases, two copies of the notice to the supervisor of the United States Geological Survey, must be used for this purpose. Oral permission obtained in advance does not relieve the operator of the necessity of filing written notice.

301. *METHOD OF PLUGGING*
Each abandoned well or hole must be plugged by or on behalf of the owner, operator, or producer who is in charge of the well and responsible for it. Before any well is abandoned, it must be plugged in a manner which will permanently confine all oil, gas, and water to the separate strata which originally contained them. Unless a different method and procedure is approved by the division upon application by the owner, operator, or producer on Form 4, the method and procedure for plugging the well is as follows:

1. The hole must be filled with mud-laden fluid and a permanent type of bridge plug must be placed at the top of each hydrocarbon-producing formation open to the well bore, or a cement plug not less than 100 feet in length must be placed immediately above each hydrocarbon-producing formation open to the well bore.
2. A cement plug not less than 100 feet in length must be placed at approximately 50 feet below and 50 feet above the interface between brackish and fresh water.
3. A 50-foot concrete plug must be placed at or near the surface of the ground in each hole.
4. The interval between plugs must be filled with heavy mud-laden fluid which will effectively seal the formation to which it is applied.
5. An uncased hole must be plugged with heavy mud up to the base of the surface string, and a cement plug not less than 100 feet in length must be placed and centered as nearly as practicable at the base of the surface casing.

302. *WELL MARKER*

The location of the abandoned hole must be shown by a steel marker at least 4 inches in diameter and at least 10 feet long set in concrete and extending at least 4 feet above ground level. The marker must bear the name of the operator, well name and number, and location. This information must be bead-welded or stamped directly to the marker pipe. The top of the pipe must be closed with a cement plug, screw cap, or welds. When requested by the surface owner, the requirements of this section may be waived by the division.

303. *SEISMIC HOLES*

Before any hole drilled for seismic, core, or other exploratory purpose is abandoned, the owner or driller must plug it so as to properly protect all water-bearing formations. The hole must be filled in with the original cuttings or gravel to the top. If artesian flow is encountered, the hole must be filled in with the original cuttings or gravel to 50 feet below the surface and plugged from 50 feet to the surface with concrete to prevent the waste of water.

304. *WATER WELLS*

If a well or exploratory hole which is to be plugged may safely be used as a fresh-water well, and the landowner wishes to so use it, the well need not be filled above the required sealing plug set below the fresh water. Written authority for use of the well or hole as a water well must be secured from the landowner on Form 10 and filed with and approved by the division. Authority from the landowner must also include the assumption of full responsibility by the landowner for the final plugging of the well. Approval by the division to convert the well to a fresh-water well, and approval of the plugging of the well to the base of the fresh-water-producing stratum releases and discharges the principal and surety from any liability under any bond given to assure that the well would be properly plugged and abandoned.

305. *TEMPORARY ABANDONMENT*

1. Each well in which production casing has been run but which has not been operated for 1 year, and each well in which no production casing has been run and for which drilling operations have ceased for 30 days, must be immediately plugged.
2. The administrator may, for good cause, grant a 6-month extension of time until the well is plugged.

306. *LIABILITY*

The operator of any well drilled for oil or gas, or any seismic, core, or other exploratory hole, whether cased or uncased, is responsible for the plugging of the well or hole.

307. *PLUGGING RECORD*

Within 30 days after the plugging of a hole or well, a plugging record must be submitted to the division on Form 4.

308. *RESTORATION OF SURFACE*

The operator shall, as soon as weather and ground conditions permit, upon the final abandonment and completion of the plugging of any well, clear the area around the well of all refuse, drain and fill all excavations, remove concrete bases, machinery and materials, and level the surface to leave the site as near to the condition encountered when operations were commenced as practicable.

Glossary

Alcove: A room or excavation located off a drift.

Backfill: The material or process used to refill an excavation.

Barrier: Any material or structure that prevents or substantially delays the movement of water or radionuclides.

Brow: A structure made by the intersection of a shaft wall and the top of a horizontal opening. It usually requires special support.

Collar: The junction of a mine shaft and the ground surface.

Commercial High-Level Waste: Products from solidification of high-level liquid wastes generated from reprocessing spent fuel from commercial electric power plants.

Components: Specific engineered structures that collectively form the sealing subsystem, e.g., seal, plug, or grout curtain.

Concrete: A composite material that consists of a binding medium and particles or fragments of aggregate.

Crosscut: A horizontal opening driven across the direction of the main workings. A connection between two drifts, tunnels, or levels.

Defense High-Level Waste: Products from solidification of high-level liquid wastes generated from reprocessing spent nuclear reactor fuel from government defense programs.

Disturbed Zone: The immediate area around the mined opening whose in situ properties have been modified from the construction of the mined opening.

Drift: Horizontal, or nearly horizontal, mined passageway. Access drifts are the tunnels that provide access to the emplacement drifts, in which radioactive waste packages are disposed in either horizontal or vertical boreholes.

Extraction Ratio: Ratio of the mined area to the total area.

Grout: A mixture of cementitious or noncementitious material and water or another fluid which produces a pourable and pumpable consistency. Hydraulic-cement based grouts may include fine aggregate or a combination of fine and coarse aggregate. Thus, grouts may be (a) neat cement (no aggregate), (b) mortars (fine aggregate) or (c) concretes of pourable consistencies (fine and coarse aggregate). Most grouts used in underground applications include little or no coarse aggregate because of limitations associated with the aperture size of the openings to be sealed or the pumping equipment needed to emplace a material containing coarse aggregate.

Lithophysae: Cavities in, but not restricted to, welded tuff and which may contain vapor-deposited mineral linings.

Panel: A division of the repository underground layout, usually rectangular, that is sized to accommodate a certain amount of waste—for use in planning, scheduling, and design analyses.

Plug: A component used for structural support.

Raise: A large-diameter hole drilled upward from the bottom.

Ramp: An inclined opening from the surface to the repository underground facility.

Seal: A component that reduces water flow.

Sealing: The activities associated with the permanent closure of the underground facility, shafts, ramps, and boreholes.

Sealing Subsystem: The portion of the overall repository system that includes the backfill, seals and plugs in shafts, ramps, drifts, and boreholes; the surface cover for shafts, ramps, and boreholes; and the drainage features designed in drifts and shafts.

Shaft: A vertical or inclined excavation for the purpose of opening and servicing a repository or a mine. It is usually equipped with a hoist at the top, which lowers and raises a conveyance for handling men and material.

Shaft Outfitting Steel: The steel attached to the shaft liner or used at the bottom of the shaft.

Shotcrete: Mortar or concrete pneumetically projected at high velocity onto a surface. It is generally sprayed onto mine timbers to make them fire resistant, onto mine surfaces to prevent erosion by air and moisture, and onto rock surfaces to stabilize against minor rock falls. It is also used to prevent dehydration and rock decrepitation.

Spent Fuel: Fuel that has been withdrawn from a nuclear reactor following irradiation, the constituent elements of which have not been separated by reprocessing.

Structural Block: A fault block or blocks that behave as a unified structured entity.

Transuranic Waste: Waste material measured or assumed to contain more than a specified concentration of transuranic elements. TRU waste is defined in DOE Order 5820.1 as waste that has a concentration of transuranic alpha emitters of at least 100 nCi/g with half-lives greater than 20 yr.

Underground Facility: The underground structure and the rock required for support, including mined openings and backfill materials, but excluding shaft, boreholes, and their seals.

Unsaturated Zone: Occurs above the water table and the capillary fringe. The rock pores are only partially filled with water having a fluid pressure less than atmospheric. The capillary fringe is the zone immediately above the water table in which the pores are saturated, but the pressure heads are less than atmospheric.

Waste Package: The waste form and any containers, shielding, packaging, and other absorbent materials immediately surrounding an individual waste container.

Water Table: The surface on which the fluid pressure in the pores of a porous medium is exactly atmospheric.

West Valley High-Level Waste: Products from solidification of high-level liquid wastes currently stored at the West Valley Nuclear Fuel Services facility in West Valley, New York. The high-level liquid wastes were generated from reprocessing spent nuclear reactor fuel.

References

D. L. Bish et al, 1983, *Summary of the Mineralogy-Petrology of Tuffs of Yucca Mountain and the Secondary-Phase Thermal Stability in Tuffs, LA-9321-MS*(Los Alamos, NM: Los Alamos National Laboratory) 47 p.

J. Bear, 1972, *Dynamics of Fluids in Porous Media* (New York:American Elsevier)

C. B. Bentley, J. H. Robison, and R. W. Spengler, 1983 *Geohydrologic Data for Test Well USW H-5, Yucca Mountain Area, Nye County, Nevada*, OFR. 83-853 (Denver, CO: US Geological Survey) 34p.

S. C. Blair et al, 1984, *Fracture and Matrix Hydrologic Characteristics of Tuffaceous Materials, Yucca Mountain, Nye County, Nevada*, SAND84-1471 (Albuquerque, NM: Sandia National Laboratories, to be published).

J. Bowen and R. Egami, 1983, *Atmospheric Overview for the Nevada Nuclear Waste Storage Investigations, Nevada Test Site, Nye County, Nevada* (Reno, NV: Desert Research Institute) 75 p.

A. Clebsch, Jr., 1960, *Ground Water in the Oak Spring Formation and Hydrologic Effects of Underground Nuclear Explosions at the Nevada Test Site*, TEI-759 (Washington, DC: US Geological Survey) 29p.

R. W. Craig, R. L. Reed, and R. W. Spengler, 1983, *Geohydrologic Data for Test Well USW H-6, Yucca Mountain Area, Nye County, Nevada*, OFR 83-856 (Denver, CO: US Geological Survey) 85 p.

Dravo Engineers, Inc., 1984, *An Evaluation of the Effects of Horizontal and Vertical Emplacement on Mining at the Yucca Mountain Repository Site*, SAND83-7443 (Denver, CO: Dravo Engineers, Inc., to be published).

W. R. Eby and C. Eby, 1982, "Pneumatic Transport in Conjunction With Shaft Construction," in *Proccedings of the 1st Mine Ventilation Symposium, University of Alabama, Tuscaloosa, AL* (New York: Society of Mining Engineers) pp 19-21.

E. B. Ekren, 1968, "Geologic Setting of Nevada Test Site and Nellis Air Force Range," in *Nevada Test Site*, E. B. Eckel, ed, GSA Memoir 110, pp 11-19.

M. D. Freshley, F. H. Dove and J. A. Fernandez, 1984, *Hydrologic Calculations Contributing to Development of Concepts for Sealing a Prospective Waste Repository at Yucca Mountain, Nevada*, SAND83-2465 (Albuquerque, NM: Sandia National Laboratories, to be published).

B. L. Herzog et al, 1982, *A Study of Trench Covers to Minimize Infiltration at Disposal Sites—Review of Present Practices and Annotated Bibliography*, NUREG/CR-2478, Vol 1 (Washington, DC: US Nuclear Regulatory Commission) 245 p.

D. L. Hoover, W. C. Swadley, and A. J. Gordon, 1981, *Correlation Characteristics of Surficial Deposits With a Description of Surficial Stratigraphy in the Nevada Test Site Region*, OFR 81-512 (Denver, CO: US Geological Survey).

J. L. Jackson, compiler, 1984, *Nevada Nuclear Waste Storage Investigations Preliminary Repository Concepts Report*, SAND83-1877 (Albuquerque, NM: Sandia National Laboratories, to be published).

J. K. Johnstone, R. Peters, and P. F. Gnirk, 1984, *Unit Evaluation at Yucca Mountain, Nevada Test Site: Summary Report and Recommendations*, SAND83-0372 (Albuquerque, NM: Sandia National Laboratories) 85p.

S. D. Maksimovic and J. C. Draper, 1982, *Building Seals by Pneumatic Stowing in Mine Closure Operations*, RI8729 (Pittsburgh, PA: US Bureau of Mines) 23 p.

S. D. Maksimovic and J. R. Lipscomb, 1982, *Sealing Openings in Abandoned Mines by Pneumatic Stowing*, RI8730 (Pittsburgh, PA: US Bureau of Mines) 26 p.

A. J. Mansure and T. S. Ortiz, 1984, *Evaluaion of the Subsurface Area Available for a Potential Nuclear Waste Repository at Yucca Mountain*, SAND84-0175 (Albuquerque, NM: Sandia National Laboratories, to be published).

L. A. Mondy and B. L. Baker, 1983, *Numerical Studies of Flow Through Multi-Material Partially-Saturated Porous Media*, Presented at the American Geophysical Union Fall Meeting, December 5-10, 1983, San Francisco, CA.

Y. Mualem, 1976, *A Catalog of the Hydraulic Properties of Unsaturated Soils*, Research Project 442 (Haifa, Israel: Technion Israel Institute of Technology, Hydrodynamics and Hydraulic Laboratory).

National Coal Board, 1982, *The Treatment of Disused Mine Shafts and Adits* (the Southern Publishing Company, 89 North Road, Brighton BN14AU,) 88p.

Nevada Department of Conservation and Mineral Resources, 1979, *Regulations and Rules of Practice and Procedure for Drilling Oil and Gas Wells* (Carson, City NV) 26 p.

Nevada Department of Conservation and Natural Resources, 1981, *Regulations for Drilling Water Wells* (Carson City, NV) 36 p.

J. R. Philip, 1969, "Theory of Infiltration," *Advances in Hydroscience*, Vol 5, V. T. Chow, ed. (New York: Academic Press) p 215-305.

R. F. Quiring, 1968, *Climatological Data Nevada Test Site and Nuclear Rocket Development Station*, ERLTM-ARL (Washington, DC: US Department of Commerce) 155 p.

A. E. Reisenauer et al, 1982, *TRUST: A Computer Program for Variably Saturated Flow in Multidimensional, Deformable Media*, NUREG/CR-2360 (Washington, DC: US Nuclear Regulatory Commission).

C. S. Ross and R. L. Smith, 1961, *Ash-Flow Tuffs: Their Origin and Geologic Relation and Identification*, US Geological Survey Professional Paper 366 (Washington, DC: US Geological Survey) 81 p.

F. E. Rush, W. Thordarson, and L. Bruckheimer, 1983, *Geohydrologic and Drill-hole Data for Test Well USW H-1, Adjacent to Nevada Test Site, Nye County, Nevada*, OFR 83-141 (Denver, CO: US Geological Survey) 38 p.

J. H. Sass and A. H. Lachenbruch, 1982; *Preliminary Interpretation of Thermal Data From the Nevada Test Site*, OFR-82-973 (Denver, CO: US Geological Survey) 30p.

R. Scott and M. Castellanos, 1983, *Preliminary Report on the Geologic Character of Drill Holes USW-GU3 and USW-G3* (Denver, CO: US Geological Survey, to be published).

R. B. Scott et al, 1983, "Geologic Character of Tuffs in the Unsaturated Zone at Yucca Mountain, Southern Nevada," in *Role of the Unsaturated Zone in Radioactive and Hazardous Waste Disposal*, J. Mercer, ed (Ann Arbor, MI: Ann Arbor Sciences) pp 289-335.

L. W. Scully et al, 1984, *A Comparative Study of Radioactive Waste Emplacement Configurations*, SAND83-1884. (Albuquerque, NM: Sandia National Laboratories, to be published).

S. Sinnock, 1983, *Geology of the Nevada Test Site and Nearby Areas, Southern Nevada*, SAND82-2207 (Albuquerque, NM: Sandia National Laboratories) 60 p.

R. W. Spengler, D. C. Muller, and R. B. Livermore, 1979, *Preliminary Report on the Geology and Geophysics of Drill Hole UE25a-1, Yucca Mountain, Nevada Test Site*, OFR 79-1244 (Denver, CO: US Geological Survey) 43 p.

R. W. Spengler and J. G. Rosenbaum, 1980, *Preliminary Interpretations of Geologic Results Obtained From Boreholes UE25a-4, -5, -6, and -7, Yucca Mountain, Nevada Test Site*, OFR 80-929 (Denver, CO: US Geological Survey) 33 p.

R. W. Spengler, F. M. Byers, Jr., and J. B. Warner, 1981, *Stratigraphy and Structure of Volcanic Rocks in Drill Hole USW-G1, Yucca Mountain, Nye County, Nevada*, OFR 81-1349 (Denver, CO: US Geological Survey) 50 p.

R. W. Spengler and D. C. Muller, 1983, *Preliminary Geologic and Geophysical Data Derived From USW-G4, Yucca Mountain, Nevada* (Denver, CO: US Geological Survey, to be published).

D. B. Stephens and S. P. Neuman, 1982a, "Vadose Zone Permeability Tests: Summary," *ASCE Journal of the Hydraulics Division*, Vol 108, No. HY5, pp 623-639.

D. B. Stephens and S. P. Neuman, 1982b, "Vadose Zone Permeability Tests: Steady-State Results," *ASCE Journal of the Hydraulics Division*, Vol 108, No. HY5, pp 640-659.

W. Thordarson, 1965, *Perched Ground Water in Zeolitized-Bedded Tuff, Nevada Test Site, Nevada*, TEI-862 (Washington, DC: US Geological Survey) 90 p.

W. Thordarson, 1983, *Geohydrologic Data and Test Results from Well J-13, Nevada Test Site, Nye County, Nevada*, Water Resources Investigation Report 82-4171 (Denver, CO: US Geological Survey) 57 p.

US Bureau of Land Management, 1980, "43 CFR 3800—Surface Management of Public Lands Under US Mining Laws—Subpart 3809, Surface Management—Final Rulemaking," *Federal Register*, November 26, 1980, pp 78909-78915.

US Department of Energy, 1984a, *General Guidelines for Recommendation of Sites for Nuclear Waste Repositories—May 7, 1984*, (Washington, DC: US Department of Energy) 91 p.

US Department of Energy, 1984b, *Nevada Nuclear Waste Storage Investigations Project—NWPA Environmental Assessment*, Draft Report (Las Vegas, NV: US Department of Energy, Nevada Operations Office, to be published).

US Environmental Protection Agency, 1982, "40 CFR 191—Environmental Standards for the Management and Disposal of Spent Fuel, High-Level and Transuranic Radioactive Wastes—Subpart A—Proposed Rules," *Federal Register*, December 29, 1982, pp 58204-58206.

US Nuclear Regulatory Commission, 1983, "10 CFR 60—Disposal of High-Level Radioactive Wastes in Geologic Repositories—Subpart E, Technical Criteria Final Rule," *Federal Register*, June 21, 1983, pp 28217-28229.

I. J. Winograd and W. Thordarson, 1975, *Hydrogeologic and Hydrochemical Framework, South-Central Great Basin, Nevada-California, With Special Reference to the Nevada Test Site*, USGS Professional Paper 712-C (Washington, DC: US Geological Survey) 126 p.

I. J. Winograd, 1981, "Radioactive Waste Disposal in Thick Unsaturated Zones," *Science*, 212(4502):1457-64.

R. M. Zimmerman and W. E. Vollendorf, 1982, *Geotechnical Field Measurements, G-Tunnel, Nevada Test Site*, SAND81-1971 (Albuquerque, NM: Sandia National Laboratories) 29 p.

DISTRIBUTION:

DOE/TIC-4500, UC-70 (334)

US Department of Energy (9)
Geologic Repository Deployment
Attn: J. W. Bennett, RW-20
R. Stein, RW-23
R. J. Blaney, Prog Mgmnt Div, RW-22
C. R. Cooley,
Geosciences & Technology Div, RW-24
M. W. Frei, Actg Director,
Engineering and Licensing Div, RW-23
J. J. Fiore, Actg Director,
Program Management Div, RW-22
C. Klingsberg,
Geosciences and Technology Div, RW24
T. P. Longo,
Program Management Div, RW-25
D. C. Newton,
Engineering and Licensing Div, RW-23
Washington, DC 20545

US Department of Energy (5)
Geologic Repository Division
Attn: E. S. Burton,
Siting Division, RW-25
R. W. Gale, Outreach Div, RW-44
B. C. Rusche, Director, Office of
Civilian Radioactive Waste Mgmt, RW-1
J. E. Shaheen, Inst Relations Staff, RW-44
B. G. Gale, Siting Division, RW-25
Forrestal Building
Washington, DC 20585

US Nuclear Regulatory Commission
Division of Waste Management
Attn: Repository Projects Branch
Washington, DC 20555

US Nuclear Regulatory Commission (2)
Division of Waste Management
High-Level Waste Technical Development Branch
Attn: Section Leader
Document Control Center
Washington, DC 20555

US Department of Energy
Crystalline Rock Project Office
Attn: S. A. Mann
9800 South Cass Avenue
Argonne, IL 60439

US Department of Energy
Salt Repository Project Office
Attn: J. O. Neff, Program Manager
505 King Avenue
Columbus, OH 43201

Batelle Memorial Institute (3)
Office of Nuclear Waste Isolation
Attn: N. E. Carter
ONWI Library (2)
505 King Avenue
Columbus, OH 43201

Batelle Memorial Institute (6)
Pacific Northwest Laboratory
Attn: F. Harvey Dove
M. D. Freshly (5)
PO Box 999
Richland, WA 99352

US Department of Energy
Richland Operations Office
Basalt Waste Isolation Project Office
Attn: O. L. Olson, Project Manager
PO Box 550
Richland, WA 99352

Roy F. Weston, Inc.
Attn: W. M. Hewitt, Program Manager
2301 Research Blvd, 3rd Floor
Rockville, MD 20850

Science Applications, Inc. (25)
Attn: J. L. Younker
2769 South Highland Dr
Las Vegas, NV 89101

State of Nevada
Office of the Governor
Attn: T. Hay, Executive Assistant
Capitol Complex
Carson City, NV 89710

State of Nevada (9)
Nuclear Waste Project Office
Attn: P. J. Iverson, Deputy Director
R. R. Loux, Jr., Manager (8)
Capitol Complex
Carson City, NV 89710

DISTRIBUTION (cont):

Lawrence Livermore National Laboratory (4)
Attn: L. D. Ramspott, MS L-204 (3)
Technical Project Officer for NNWSI
K. Street, Jr., MS L-209
PO Box 808
Livermore, CA 94550

Los Alamos National Laboratory (5)
Attn: D. C. Hoffman, MS E-515
D. T. Oakley, MS F-671 (3)
Technical Project Officer, MS F-671
Clarence Duffy
PO Box 1663
Los Alamos, NM 87545

Westinghouse Electric Corporation
Waste Technology Services Division
Nevada Operations
Attn: J. B. Wright, Technical Project Officer, for NNWSI, MS 703
PO Box 708
Mercury, NV 89203

US Geological Survey (3)
Attn: W. W. Dudley, Jr.
Technical Project Officer for NNWSI, MS 418
PO Box 25046
Federal Center
Denver, CO 80225

US Geological Survey
Attn: V. N. Glanzman
PO Box 25046
913 Federal Center
Denver, CO 80225

Science Applications, Inc.
Attn: M. E. Spaeth
Technical Project Officer for NNWSI
2769 South Highland Drive
Las Vegas, NV 89109

Science Applications, Inc. (2)
Attn: SAI-T&MSS Library
2950 South Highland Drive
Las Vegas, NM 89109

P. T. Prestholt
NRC Site Representative
1050 East Flamingo Road, Suite 319
Las Vegas, NV 89109

US Department of Energy (20)
Attn: D. L. Vieth, Director (4)
Waste Management Project Office
D. F. Miller, Director
Office of Public Affairs
D. A. Nowack, Office of Public Affairs (14)
B. W. Church, Director
Health Physics Division
PO Box 14100
Las Vegas, NV 89114

Holmes & Narvar, Inc.
Attn: A. E. Gurrola, General Manager
Energy Support Division
PO Box 14340
Las Vegas, NV 89114

Reynolds Electrical & Engineering Co., Inc.
Attn: H. D. Cunningham,
General Manager, MS 555
PO Box 14400
Las Vegas, NV 89114

Fenix & Scisson, Inc.
Attn: J. A. Cross, Manager
Las Vegas Branch
PO Box 15408
Las Vegas, NV 89114

Desert Research Institute
Water Resources Center
Attn: John Fordham
PO Box 60220
Reno, NV 89506

Desert Research Institute
Water Resources Center
Attn: Dr. Martin Mifflin
1500 East Topicana Ave, Suite 201
Las Vegas, NV 89109

W. S. Twenhofel
820 Estes Street
Lakewood, CO 80215

Corps of Engineers
Waterways Experiment Station
Attn: G. S. Wong
PO Box 631
Vicksburg, MS 39180

DISTRIBUTION (cont):

Pennsylvania State University (2)
Material Research Laboratory
Attn: D. Roy
P. Licastro
University Park, PA 16802

6300	R. W. Lynch
6310	T. O. Hunter (4)
6311	L. H. Scully
6311	L. G. Perrine (2)
6312	F. H. Bingham
6312	S. Sinnock
6312	M. S. Tierney
6313	J. R. Tillerson (15)
6313	A. Stevens
6313	J. A. Fernandez (20)
6330	W. D. Weart
6332	J. C. Stormont
8024	M. A. Pound
3141	D. K. Brown, Actg (5)
3151	W. L. Garner (3)

☆U.S. GOVERNMENT PRINTING OFFICE:1984—776-027 / 4369