P.2 Principal Design Criteria

This section provides the principal design criteria for the NUHOMS®-24PTH system, which is described in Chapter P.1.

Only those principal design criteria that have changed from the existing FSAR, Chapter 3, are described in this chapter. Section P.2.1 presents a general description of the spent fuel to be stored. Section P.2.2 provides the design criteria for environmental conditions and natural phenomena. Section P.2.3 provides a description of the systems that have been designated as important to safety. Section P.2.4 discusses decommissioning considerations. Section P.2.5 summarizes the NUHOMS®-24PTH DSC and HSM-H design criteria.

P.2.1 Spent Fuel To Be Stored

As described in Chapter P.1, there are three design configurations for the NUHOMS®-24PTH DSC; S, L and S-LC. Each of the DSC configurations is designed to store intact (including reconstituted) and/or damaged PWR fuel assemblies as specified in Table P.2-1 and Table P.2-3. The fuel to be stored is limited to a maximum assembly average initial enrichment of 5.0 wt. % ^{235}U. The maximum allowable assembly average burnup is limited to 62 GWd/MTU and the minimum cooling time is 3 years. The 24PTH-L and 24PTH-S-LC DSCs are also designed to store Control Components (CCs) with thermal and radiological characteristics as listed in Table P.2-2. The CCs include Burnable Poison Rod Assemblies (BPRAs), Thimble Plug Assemblies (TPAs), Control Rod Assemblies (CRAs), Axial Power Shaping Rod Assemblies (APSRAs), Orifice Rod Assemblies (ORAs), and Neutron Source Assemblies (NSAs).

Reconstituted assemblies containing up to 10 replacement stainless steel rods per assembly or unlimited number of lower enrichment UO_2 rods are acceptable for storage in 24PTH DSC as intact fuel assemblies. The stainless steel rods are assumed to have two-thirds the irradiation time as the remaining fuel rods of the assembly. The reconstituted UO_2 rods are assumed to have the same irradiation history as the entire fuel assembly. The reconstituted rods can be at any location in the fuel assemblies. The maximum number of reconstituted fuel assemblies per DSC is four.

The NUHOMS®-24PTH DSCs can also accommodate up to a maximum of 12 damaged fuel assemblies placed in cells located at the outer edge of the DSC as shown in Figure P.2-6. Damaged PWR fuel assemblies are assemblies containing missing or partial fuel rods, or fuel rods with known or suspected cladding defects greater hairline cracks, or pinhole leaks. The extent of damage in the fuel rods is to be limited such that a fuel pellet is not able to pass through the damaged cladding during handling and retrievability is assured following normal and off-normal conditions. The DSC basket cells which store damaged fuel assemblies are provided with top and bottom end caps to assure retrievability.

A 24PTH DSC containing less than 24 fuel assemblies may contain either empty slots or dummy fuel assemblies in the empty slots. The dummy assemblies are unirradiated, stainless steel encased structures that approximate the weight and center of gravity of a fuel assembly.

The NUHOMS®-24PTH-S and 24PTH-L DSCs may store up to 24 PWR fuel assemblies arranged in any of the four alternate heat load zoning configurations shown in Figure P.2-1 through Figure P.2-4 with a maximum decay heat of 2.0 kW per assembly and a maximum heat load of 40.8 kW per canister.

The 24PTH-S-LC may store up to 24 B&W 15x15 fuel assemblies arranged in accordance with heat load zoning configuration No. 5 with a maximum decay heat of 1.5 kW per assembly and a maximum heat load of 24.0 kW per DSC, as shown in Figure P.2-5.

The 24PTH DSC basket is designed with 2 alternate options: Type 1 basket, which includes aluminum inserts in the R45 transition rails, and Type 2 basket which does not include any aluminum inserts. Type 1 basket is the preferred option for canisters with high decay heat loads, since the aluminum inserts allow a more direct heat conduction path from the basket edge to the

DSC shell. Type 2 basket offers the advantage of an adequate thermal performance but with a lower lifting weight requirement.

The NUHOMS®-24PTH DSC basket is designed with three alternate poison materials: Borated Aluminum alloy, Boron Carbide/Aluminum Metal Matrix Composite (MMC) and Boral®. For criticality analysis, 90% of B10 content present in the borated aluminum and MMC poison plates is credited, while only 75% is credited for Boral®.

For each poison material, the NUHOMS®-24PTH DSC basket is analyzed for six alternate basket configurations, depending on the boron loadings analyzed (designated as "A" basket for low B10 loading, "B" basket for moderate B10 loading, and "C" basket for high B10 loading) and Basket-Type (Type 1 or Type 2).

A summary of the alternate poison loadings considered and the corresponding credit taken in the criticality analysis for each poison material as a function of basket types is presented below:

Poison Type	24PTH Basket Type(1)	Poison Loading (B10 mg/cm^2)	% Credit Used in Criticality Analysis
Borated Aluminum Alloy/MMC	1A or 2A	7	90
	1B or 2B	15	
	1C or 2C	32	
Boral®	1A or 2A	9	75
	1B or 2B	19	
	1C or 2C	40	

(1) Type 1A = Basket Type 1 with aluminum inserts in the R45 transition rails and Type A poison plate configuration;
Type 2A = Basket Type 2 without aluminum inserts in the R45 transition rails and Type A poison plate configuration;

Table P.2-6 through Table P.2-9 define the minimum required cooling time after reactor discharge for a fuel assembly without CCs for a given assembly heat load, burnup, and maximum initial enrichment parameters. These tables ensure that the fuel assembly decay heat load is less than that specified for each table and that the corresponding radiation source term is bounded by that analyzed in Chapter P.5. Similarly, Table P.2-10 through Table P.2-13 defines the minimum required cooling time after reactor discharge for a fuel assembly with CCs.

The NUHOMS®-24PTH DSC is inerted and backfilled with helium at the time of loading. The maximum fuel assembly weight with a CC is 1682 lbs.

The maximum fuel cladding temperature limit of 400°C (752°F) is applicable to normal conditions of storage and all short term operations from spent fuel pool to ISFSI pad including vacuum drying and helium backfilling of the NUHOMS®-24PTH DSC per Interim Staff Guidance (ISG) No. 11, Revision 2 [2.5]. In addition, ISG-11 does not permit thermal cycling of the fuel cladding with temperature differences greater than 65°C (117°F) during DSC drying, backfilling and transfer operations.

The maximum fuel cladding temperature limit of 570°C (1058°F) is applicable to accidents or off-normal thermal transients [2.5].

Calculations were performed to determine the fuel assembly type which was most limiting for each of the analyses including shielding, criticality, thermal and confinement. These evaluations are performed in Chapter P.5, P.6, P.4 and P.7 respectively. The fuel assembly classes considered are listed in Table P.2-3. It was determined that the B&W 15x15 is the enveloping fuel design for the shielding source term calculation because of its total assembly weight and highest initial heavy metal loading. For criticality safety, the B&W 15x15 assembly is the most reactive assembly type for a given enrichment. This assembly is used to determine the most reactive configuration in the DSC. Using this most reactive configuration, criticality analysis for all other fuel assembly classes is performed to determine the maximum enrichment allowed as a function of the soluble boron concentration and fixed poison plate loading. For thermal analysis, the WE 14x14 fuel assembly is limiting for the 24PTH-S and -L DSCs, and B&W 15x15 fuel assembly for the 24PTH-S-LC DSC since they result in the lowest fuel conductivity. The confinement analysis is based on B&W 15x15 fuel assembly, since it results in a smaller free volume inside the DSC cavity as compared to a 14x14 fuel assembly.

For calculating the maximum internal pressure in the NUHOMS®-24PTH DSC, it is assumed that 1% of the fuel rods are damaged for normal conditions, up to 10% of the fuel rods are damaged for off normal conditions, and 100% of the fuel rods will be damaged following a design basis accident event. A minimum of 100% of the fill gas and 30% of the fission gases within the ruptured fuel rods are assumed to be available for release into the DSC cavity, consistent with NUREG-1536 [2.1].

The maximum internal pressures used in the structural analysis for the NUHOMS®-24PTH DSC are 15, 20, and 120 psig for normal, off-normal and accident conditions, respectively, during storage and transfer operations for the 24PTH-S DSC and 24PTH-L DSC. The maximum internal pressures for the 24PTH-S-LC are 15, 20, and 90 psig for normal, off-normal and accident conditions, respectively.

P.2.1.1 General Operating Functions

No change.

P.2.2 Design Criteria for Environmental Conditions and Natural Phenomena

The NUHOMS®-24PTH DSC is handled and stored in the same manner as the existing NUHOMS®-24P System. The environmental conditions and natural phenomena are the same as those described in the existing FSAR, Chapter 3. Updated criteria are given in the applicable section. Table P.2-18 summarizes the design criteria for the 24PTH DSC and HSM-H. This table also summarizes the applicable codes and standards utilized for design. Design criteria for the Standardized HSM Model 102 and Standardized Transfer Cask (TC) remain the same as shown in Section 3 of the FSAR. The OS197/OS197H TC described in the FSAR, provided with a modified top lid, is designated as OS197FC TC. The design criteria for OS197/OS197H/OS197FC TC remain the same as shown in Section 3 of the FSAR.

P.2.2.1 Tornado Wind and Tornado Missiles

P.2.2.1.1 Applicable Design Parameters

The design basis tornado (DBT) wind intensities used for the HSM-H design are obtained from NRC Regulatory Guide 1.76. Region I intensities are utilized since they result in the most severe loading parameters. For this region, the maximum wind speed is 360 mph, the rotational speed is 290 mph and the maximum translational speed is 70 mph. The radius of the maximum rotational speed is 150 ft, the pressure drop across the tornado is 3 psi and the rate of pressure drop is 2 psi per second [2.6].

P.2.2.1.2 Determination of Forces on Structure

Tornado loads are generated for three separate loading phenomena:

- Pressure or suction forces created by drag as air impinges and flows past the HSM-H. These pressure or suction forces are due to tornado generated wind with maximum wind speed of 360 mph.
- Pressure or suction forces created by tornado generated pressure drop or differential pressure load of 3 psi.
- Impact, penetration and spalling forces created by tornado-generated missiles impacting on the HSM-H.

The DBT velocity pressure is computed based on the following equation specified in ASCE 7-95 [2.8].

$$q_v = 0.00256\ K_z * K_{zt} * I * V^2 \text{ lb/sq ft}$$

Where:

K_z = velocity pressure exposure coefficient equal to 0.9 applied to the full HSM-H height of 18.5 ft for level C exposure (Table 6-3 of [2.8]).

K_{zt} = 1.0 for level C exposure and structures with height less than 30 ft. (Section 6.5.5 of [2.8]).

I = Importance Factor equal to 1.15 (Table 6-2 of [2.8]).

Since the generic design basis HSM-H dimensions are relatively small compared to 150 ft rotational radius of the DBT, the velocity value of combined rotational and translational wind velocity of 360 mph is conservatively used in the above equation to compute the DBT velocity pressure of 344 psf.

P.2.2.1.3 Tornado Missiles

The determination of impact forces created by DBT generated missiles for the HSM-H is based on the criteria provided by NUREG-0800, Section 3.5.1.4, III.4 [2.7]. Accordingly, eight types of missiles are postulated:

1. The utility wooden pole, 13.5" diameter, 35' long missile weighing 1500 lbs at a horizontal velocity of 294 fps.

2. The armor piercing artillery shell 8" diameter, weighing 276 lbs at a horizontal velocity of 185 fps.

3. The steel pipe missile 12" diameter, Schedule 40, 30' long weighing 1500 lbs at a horizontal velocity of 205 fps.

4. The massive automobile missile weighing 4000 lbs at a horizontal velocity of 195 fps traveling through the air not more than 25 ft above the ground and having contact area of 20 square ft.

5. Wood plank missiles traveling end on, 200 lbs, traveling at 440 fps.

6. Steel Pipe 3" diameter, Sch 40, weighing 115 lbs, traveling at 268 fps.

7. Steel Pipe 6" diameter, Sch 40, 285 lbs, traveling at 230 fps.

8. Steel rod, 1" diameter, 3' long weighing 8 lbs traveling at 317 fps.

For the overall effects of a DBT missile impact, overturning and sliding of the HSM-H, the force due to the deformable massive missile impact is applied to the structure at the most adverse location. Conservation of momentum is assumed to demonstrate that sliding and/or tipping of the module will not result in an unacceptable condition for the module. The coefficient of restitution is assumed to be zero and the missile energy is transferred to the module to be dissipated as sliding friction, or an increase in potential energy due to raising the center of gravity. The force is evenly distributed over the impact area. The magnitude of the impact force for design of the local reinforcing is calculated in accordance with Bechtel Topical Report "Design of Structures for Missile Impact" [2.13].

For the local damage analysis of the HSM-H for DBT missiles, three governing missiles are used for the evaluation of concrete penetration, spalling, scabbing and perforation thickness. The modified National Defense Research Committee (NDRC) empirical formula is used for this

evaluation as recommended in NUREG-0800, Section 3.5.3 [2.7]. The results of these evaluations are reported in Section P.11.

The evaluation of tornado-generated missile loads on the transfer cask summarized in Section 8.2 of the FSAR remains unchanged.

P.2.2.2 Water Level (Flood) Design

No change.

P.2.2.3 Seismic Design

The seismic design criteria for the HSM-H is consistent with the criteria set forth in Section 3.2.3, with the exception that the NRC Regulatory Guide 1.60 (R.G. 1.60) [2.11] response spectra is anchored to a maximum ground acceleration of 0.30g (instead of 0.25g) for the horizontal components and 0.20g (instead of 0.17g) for the vertical component. The results of the frequency analysis of the HSM-H structure (which includes a simplified model of the DSC) yield a lowest frequency of 23.2 Hz in the transverse direction and 28.4 Hz in the longitudinal direction. The lowest vertical frequency exceeds 33 Hz. Thus, based on the R.G. 1.60 response spectra amplifications, the corresponding seismic accelerations used for the design of the HSM-H are 0.37g and 0.33g in the transverse and longitudinal directions respectively and 0.20g in the vertical direction. The corresponding accelerations applicable to the DSC are 0.41g and 0.36g in the transverse and longitudinal directions, respectively, and 0.20g in the vertical direction. The seismic analysis of the HSM-H and 24PTH DSC are further discussed in Section P.3.7.

The seismic design criteria for the TC and HSM Model 102 does not change from that documented in Section 8.2. Therefore, even though the HSM-H and 24PTH DSCs are analyzed for 0.3g horizontal and 0.2g vertical seismic loads, the seismic design criteria for the 24PTH system is still limited to the criteria documented in Section 8.2.

P.2.2.4 Snow and Ice Loading

No change.

P.2.2.5 Combined Load Criteria

The NUHOMS®-24PTH system is subjected to the same types of loads as the existing NUHOMS®-24P or -52B System. The load combination criteria for the TCs for transfer are the same as those shown in the FSAR Table 3.2-7. The criteria applicable to the NUHOMS®-24PTH DSC and HSM-H are discussed in the following subsections.

P.2.2.5.1 NUHOMS®–24PTH DSC Structural Design Criteria

The NUHOMS®-24PTH DSC is designed using the ASME Boiler and Pressure Vessel Code [2.2] criteria given in the existing FSAR, Chapter 3, except as noted in the following sections. A summary of the NUHOMS®-24PTH DSC load combinations is presented in Table P.2-14.

P.2.2.5.1.1 NUHOMS®–24PTH DSC Shell Stress Limits

The stress limits for the NUHOMS®-24PTH DSC shell are taken from the ASME Boiler and Pressure Vessel Code, Section III, Subsection NB, Article NB-3200 [2.2] for normal condition loads (Level A) and NB-3225, Appendix F for accident condition loads (Level D). The stress limits for Level B and Level C are taken from ASME, Section III, Subsection NB, Paragraph NB-3223 and 3224.

Local yielding is permitted at the point of contact where the Level D load is applied. If elastic stress limits cannot be met, the plastic system analysis approach and acceptance criteria of Appendix F of ASME Section III are used.

The allowable stress intensity value, S_m, as defined by the Code is based on the temperature calculated for each service load condition or a bounding temperature.

P.2.2.5.1.2 NUHOMS®–24PTH DSC Basket Stress Limits

The basket fuel compartment tube wall thickness is established to meet heat transfer, nuclear criticality, and structural requirements. The basket structure provides sufficient rigidity to maintain a subcritical configuration under the applied loads.

No credit is taken for neutron poison plates in any of the stress or stability analyses except for through the thickness compression (bearing) loads.

Normal Conditions

Normal Condition Stress Criteria for Steel Elements

As summarized in Table P.2-16, the normal condition stress criteria for the fuel compartment tubes and the transition rails, is based on Subsection NG of the ASME Code, Section III [2.2].

Normal Condition Stress Criteria for R90 Aluminum Transition Rails

The aluminum transition rail bodies (R90) perform their function (support of the fuel compartment tubes) by remaining in place. The loads on the rail bodies are primarily bearing from the fuel compartment tubes. "Failure" of the transition rail would require that the rail no longer provide support to the fuel compartment tubes. Since the aluminum rail bodies are constrained between the DSC shell and the fuel support compartment tubes, this cannot occur.

Therefore, for deadweight and handling condition loads, stress in the aluminum bodies will be compared to the allowable bearing stress, equal to S_y, from NG-3227.1(a). Values of S_y are taken from Table P.3.3-4 for annealed 6061 aluminum material at temperature (as described in Section P.3.3, these yield stresses are lower bound values).

Normal Condition Stability Criteria

Stability criteria are addressed in two parts:

A. Under axial loads, the DSC shell and transfer/transport cask provide overall/global stability to the 24PTH basket structure. Thus, only local stability effects are specifically addressed.

For axial compression loads, stability criteria for the fuel compartment tubes are based on NF-3322.1(c)(2) (for austenitic members). Using a span length of 24.0 in, corresponding to the maximum distance between basket straps and a value of K=1.0 (pinned-pinned condition) a slenderness ratio (KL/ r) of 6.42 is calculated.

Application of elastic stability criteria to the fuel tubes is conservative as the low value of KL/ r indicates elastic buckling is not a likely failure mechanism. In addition, buckling is restricted by the adjacent tubes, transition rails, and DSC shell.

In addition, the width to thickness ratio of the tube wall is checked using NF-3322.2(d)(2)(b)(1) to verify that the tubes are fully effective in compression.

B. Under lateral loads, stability of the basket tube structure is demonstrated using hand calculations to evaluate the fuel compartment tubes "ligaments" as columns using the stability criteria of NF-3322.1(c)(2) for stainless steel compression members.

Accident Conditions

Accident Condition Stress Criteria for Steel Elements

As summarized in Table P.2-16 the accident condition (Level D) stress criteria for the fuel support structure and the welded steel transition rails is based on Appendix F of the ASME Code, Section III. Criteria are provided for both linear elastic and elastic-plastic stress analyses.

Accident Condition Criteria for R90 Aluminum Transition Rails

For accident condition loading (i.e., the postulated drops), the R90 aluminum transition rail bodies must support the fuel tubes such that stresses and displacements in the fuel compartment tubes are acceptable. Since, the rail bodies are captured between the fuel compartment tube and the DSC shell, large displacements of the rails are prevented. Thus, no additional checks (of the aluminum) are required for accident/drop loading. Qualification of the fuel tubes demonstrates that the R90 rails perform their intended function.

Accident Condition Stability Criteria

Similar to the normal condition evaluations, stability criteria are addressed in two parts:

A. Accident condition axial stresses in the fuel compartment tubes are evaluated using the equation from F-1334.3(b)(1)[2.2] loads, stability of the basket structure is demonstrated using detailed finite element models and the Collapse Load criteria from F-1341.3 [2.2]. These criteria establish the allowable load as 90% of the Limit Analysis Collapse Load where the Limit Analysis Collapse Load is the maximum load determined using elastic-perfectly plastic material properties with a yield stress equal to the lesser of $2.3S_m$ or $0.7S_u$.

In addition, supplementary hand calculations were performed using the criteria of F-1334.3(b) for members under axial compression.

B. Under lateral loads, stability of the basket structure is demonstrated using detailed finite element models and the Collapse Load criteria from F-1341.3 [2.2]. These criteria establish the allowable load as 90% of the Limit Analysis Collapse Load where the Limit Analysis Collapse Load is the maximum load determined using elastic-perfectly plastic material properties with a yield stress equal to the lesser of $2.3S_m$ or $0.7S_u$.

In addition, supplementary hand calculations were performed using the criteria of F-1334.3(b) for members under axial compression.

P.2.2.5.2 NUHOMS® HSM-H Structural Design Criteria

A summary of the design loads for the HSM-H System is provided in Table P.2-18. The table also presents the applicable codes and standards for development of these loads. The design criteria discussed below comply with the requirements of 10CFR72.122 [2.10], and ANSI 57.9 [2.9].

P.2.2.5.2.1 HSM-H Normal Loads

(A) Dead Loads (DW)

Dead load includes the weight of the HSM-H concrete structure and the steel structure (the 24PTH-DSC weight is considered as a live load rather than a dead load).

The dead load is varied by +5% from the estimated value to simulate the most adverse loading condition in accordance with ANSI-57.9 [2.9].

(B) Live Loads (LL)

Live loads include the roof design basis snow and ice load of 110 psf conservatively derived from ASCE 7-95 [2.8]. A total live load of 200 psf (which includes snow and ice load) is used to envelope all postulated live loading, including such items as ladders, handrails, conduits, etc. added for personnel protection. In addition, the normal handling loads (RO), and off-normal handling loads (RA), and the 24PTH-DSC weight are treated as live loads for the concrete component evaluation.

In accordance with ANSI-57.9 [2.9], the live load is varied between 0% and 100% of the estimated load to simulate the most adverse conditions for the structure.

(C) Normal Operating Thermal Loads (TN)

The normal thermal loads on HSM-H include the effects of design basis internal heat load (40.8 kW maximum heat load for the 24PTH system) generated by the canister plus the effects of normal ambient conditions (0°F and 100°F).

(D) Normal Handling Loads (RO)

The most significant normal operational loading condition for the HSM-H components is the sliding of the 24PTH-DSC from the TC into the HSM-H. Friction forces are developed between the sliding surfaces of the 24PTH-DSC, the TC and the HSM-H support rails. Normal operation assumes the canister is sliding over the support structure due to a hydraulic ram force of up to 80,000 lbs (insertion) and 60,000 lbs (extraction) applied to the 24PTH-DSC base. It is assumed that the 80 or 60 kips load is resisted by an axial load (40 or 30 kips) in each support rail and front embedments. In addition the 24PTH-DSC weight is applied as a distributed load on both the rails.

(E) Design Basis Wind Load (WW)

Conservatively, this load case is assumed to be enveloped by tornado generated wind load (WT) described in Section P.2.2.5.2.3(B).

P.2.2.5.2.2 HSM-H Off-Normal Loads

(A) Off-Normal Operating Thermal Loads (TO)

This load case is the same as the normal thermal load but with an ambient temperature range from -40°F to 117°F. The temperature distribution for the extreme ambient conditions are used in the analysis for the concrete and steel component evaluation.

(B) Off-Normal Handling Loads (RA)

This load case assumes that the TC is not accurately aligned with respect to the HSM-H resulting in binding of the 24PTH-DSC during a transfer operation causing the hydraulic pressure in the ram to increase. The ram force is limited to a maximum load of 80 kips during insertion and 80 kips during retrieval. Therefore, for the steel support structure, the off-normal jammed canister load (RA) is defined as an axial load on one rail of 80 kips during insertion and 80 kips during retrieval, plus a vertical load of one half the 24PTH-DSC weight (on both rails) at the most critical location. The off-normal operating handling loads are considered as live loads for the design of the concrete components.

P.2.2.5.2.3 HSM-H Accident Loads

(A) Accident Thermal Loads (TA)

The postulated accident thermal event occurs due to blockage of either the air inlet or outlet vents under off-normal ambient temperatures range from –40°F to 117°F.

(B) Tornado Wind and Tornado Missiles (WT, WM)

This load is described in Section P.2.2.1. The design pressures for the tornado wind load are shown in Table P.2-19.

(C) Flood Load (FL)

No change.

(D) Earthquake Load (EQ)

The HSM-H is evaluated for amplified ground accelerations resulting from a design basis earthquake defined in NRC R.G. 160 [2.11] anchored at 0.30g horizontal and 0.2g vertical accelerations.

P.2.3 Safety Protection Systems

P.2.3.1 General

The NUHOMS®-24PTH DSC is designed to provide storage of spent fuel for at least 40 years. The DSC cavity is inerted and backfilled with helium and the internal pressure is always above atmospheric during the storage period as a precaution against in-leakage of air, which could be harmful to the fuel. Since the confinement vessel consists of a steel cylinder with an integrally welded bottom closure, and a seal welded top closure that is verified to be leak tight after loading, the DSC cavity gas cannot escape.

Only those features that are not addressed in the existing FSAR, Chapter 3, or have been revised, are addressed in this Section. Those features include the thermal and nucleonic performance of the poison plates, and their acceptance. Components of the NUHOMS®-24PTH DSC that are "Important to Safety" and "Not Important to Safety" are listed in Table P.2-17.

P.2.3.2 Protection By Multiple Confinement Barriers and Systems

The NUHOMS®-24PTH DSC provides a leak tight confinement of the spent fuel. Although similar to the existing NUHOMS®-24P DSC, sealing of the NUHOMS®-24PTH DSC involves leak testing to the criteria of ANSI N14.5 [2.4] after loading and sealing the canister, as described in Section P.7.

P.2.3.3 Protection By Equipment and Instrumentation Selection

No change.

P.2.3.4 Nuclear Criticality Safety

P.2.3.4.1 Control Methods for Prevention of Criticality

The design criterion for criticality is that an upper subcritical limit (USL) of 0.95 minus benchmarking bias and modeling bias will be maintained for all postulated arrangements of fuel within the DSC. The intact fuel assemblies are assumed to stay within their basket compartment based on the DSC and basket geometry.

The control method used to prevent criticality is incorporation of poison material in the basket material, soluble boron in the pool and favorable geometry. The quantity and distribution of boron in the poison material is controlled by specific manufacturing and acceptance criteria of the poison plates. The acceptance criteria of the plates is described in Section P.9.

The basket has been designed to assure an ample margin of safety against criticality under the conditions of fresh fuel in a DSC flooded with borated pool water. The method of criticality control is in accordance with the requirements of 10CFR72.124 [2.10].

The criticality analyses performed for the 24PTH system are described in Section P.6.

P.2.3.4.2 Error Contingency Criteria

Provision for error contingency is built into the criterion used in Section P.2.3.4.1 above. The criterion used in the criticality analysis is common practice for licensing submittals. Because conservative assumptions are made in modeling, it is not necessary to introduce additional contingency for error.

P.2.3.4.3 Verification Analysis-Benchmarking

The verification analysis benchmarking used in the criticality safety analysis is described in Section P.6.

P.2.3.5 Radiological Protection

No change.

P.2.3.6 Fire and Explosion Protection

No change.

P.2.4 Decommissioning Considerations

No change.

P.2.5 Summary of NUHOMS®-24PTH DSC and HSM-H Design Criteria

P.2.5.1 24PTH DSC Design Criteria

The principal design criteria for the NUHOMS®-24PTH DSC are presented in Table P.2-17. The NUHOMS®-24PTH DSC is designed to store intact and/or damaged PWR fuel assemblies with or without Control Components with assembly average burnup, initial enrichment and cooling time as described in Table P.2-1 and Table P.2-3. The maximum total heat generation rate of the stored fuel is limited to 2.0 kW per fuel assembly (1.5 kW for 24PTH-S-LC DSC) and 40.8 kW per canister (24.0 kW for 24PTH-S-LC DSC) in order to keep the maximum fuel cladding temperature below the limit [2.5] necessary to ensure cladding integrity. The fuel cladding integrity is assured by the NUHOMS®-24PTH DSC and basket design which limits fuel cladding temperature and maintains a nonoxidizing environment in the DSC cavity as described in Section P.4.

The NUHOMS®-24PTH DSC (shell and closure) is designed and fabricated as a Class 1 component in accordance with the rules of the ASME Boiler and Pressure Vessel Code, Section III, Subsection NB [2.2], and the alternative provisions to the ASME Code as described in Table P.3.1-1.

The NUHOMS®-24PTH DSC is designed to maintain a subcritical configuration during loading, handling, storage and accident conditions. A combination of fixed neutron absorbers, soluble boron in the pool and favorable geometry are employed to maintain the upper subcritical limit of 0.9411. The fixed neutron absorbers are in the form of borated aluminum metallic plates or Boral®. The basket is designed and fabricated in accordance with the rules of the ASME Boiler and Pressure Vessel Code, Section III, Subsection NG, Article NG-3200 [2.2] and the alternative provisions to the ASME Code as described in Table P.3.1-1.

The NUHOMS®-24PTH DSC design, fabrication and testing are covered by Transnuclear's Quality Assurance Program, which conforms to the criteria in Subpart G of 10CFR72.

The NUHOMS®-24PTH DSC is designed to withstand the effects of severe environmental conditions and natural phenomena such as earthquakes, tornadoes, lightning and floods. Section P.11 describes the NUHOMS®-24PTH DSC behavior under these accident conditions.

P.2.5.2 HSM-H Design Criteria

The load combination and design criteria for concrete and support structure components are the same as those described in Section 3.2.5.1. These criteria, provided in Tables 3.2-4, 3.2-5, 3.2-8 and 3.2-10 are also applicable to the HSM-H design.

P.2.6 References

2.1 NUREG-1536, "Standard Review Plan for Dry Cask Storage Systems," 1997.

2.2 American Society of Mechanical Engineers, ASME Boiler And Pressure Vessel Code, Section III, Division 1 - Subsections NB, NG and NF, 1998 edition including 2000 Addenda.

2.3 Young, W.C., "Roark's Formulas for Stress and Strain," 6th Edition, McGraw-Hill Book Company, New York, 1989.

2.4 ANSI N14.5-1997, "Leakage Tests on Packages for Shipment," February 1998.

2.5 Interim Staff Guidance No. 11, Revision 2, "Cladding Considerations for the Transportation and storage of Spent Fuel", dated July 30, 2002.

2.6 "Design Basis Tornado for Nuclear Power Plants," Regulatory Guide 1.76, U.S. Atomic Energy Commission, April 1974.

2.7 "Missiles Generated by Natural Phenomenon," Standard Review Plan, NUREG-0800, U.S. Nuclear Regulatory Commission.

2.8 American Society of Civil Engineers, ASCE 7-95, "Minimum Design Loads for Buildings and Other Structures" (formerly ANSI A58.1).

2.9 ANSI/ANS 57.9-1984, "Design Criteria for an Independent Spent Fuel Storage Installation (Dry Storage Type)," American Nuclear Society.

2.10 Title 10, Code of Federal Regulations, Part 72 (10CFR72), "Licensing Requirements for the Storage of Spent Fuel in the Independent Spent Fuel Storage Installation," U.S. Nuclear Regulatory Commission, August 31, 1988.

2.11 Regulatory Guide 1.60, "Design Response Spectra for Seismic Design of Nuclear Power Plants," U.S. Atomic Energy Commission, Revision 1, December 1973.

2.12 Regulatory Guide 1.61, "Damping Values for Seismic Design of Nuclear Power Plants," U.S. Atomic Energy Commission, October 1973.

2.13 Bechtel Topical Report, "Design of Structures for Missile Impact," BC-TOP-9-A, Revision 2, September 1974.

Table P.2-1
PWR Fuel Specification for the Fuel to be Stored in the NUHOMS®-24PTH DSC

PHYSICAL PARAMETERS:	
Fuel Class	Intact or damaged unconsolidated B&W 15x15, WE 17x17, CE 15x15, WE 15x15, CE 14x14 and WE 14x14 class PWR assemblies (with or without control components) that are enveloped by the fuel assembly design characteristics listed in Table P.2-3. Equivalent reload fuel manufactured by other vendors but enveloped by the design characteristics listed in Table P.2-3 is also acceptable.
Fuel Damage	Damaged PWR fuel assemblies are assemblies containing missing or partial fuel rods or fuel rods with known or suspected cladding defects greater than hairline cracks or pinhole leaks. The extent of cladding damage in the fuel rods is to be limited such that a fuel pellet is not able to pass through the damaged cladding during handling and retrievability is assured following normal and off-normal conditions.
Reconstituted Fuel Assemblies: • Maximum No. of Reconstituted Assemblies per DSC With Stainless Steel Rods • Maximum No. of Stainless Steel Rods per Reconstituted Fuel Assembly • Maximum No. of Reconstituted Assemblies per DSC with low enriched UO2 rods	 4 10 24
Control Components (CCs)	• Up to 24 CCs are authorized for storage in 24PTH-L and 24PTH-S-LC DSCs only. • Authorized CCs include Burnable Poison Rod Assemblies (BPRAs), Thimble Plug Assemblies (TPAs), Control Rod Assemblies (CRAs), Axial Power Shaping Rod Assemblies (APSRAs), Orifice Rod Assemblies (ORAs), and Neutron Source Assemblies (NSAs). • Design basis thermal and radiological characteristics for the CCs are listed in Table P.2-2.
Nominal Assembly Width	8.536 inches
No. of Intact Assemblies	≤24
No. and Location of Damaged Assemblies	Up to 12 damaged fuel assemblies. Balance may be intact fuel assemblies, empty slots, or dummy assemblies depending on the specific heat load zoning configuration. Damaged fuel assemblies are to be placed in Locations A and/or B as shown in Figure P.2-6. The DSC basket cells which store damaged fuel assemblies are provided with top and bottom end caps to assure retrievability.
Maximum Assembly plus CC Weight	1682 lbs

Table P.2-1
PWR Fuel Specification for the Fuel to be Stored in the NUHOMS®-24PTH DSC

(Concluded)

THERMAL/RADIOLOGICAL PARAMETERS:	
Allowable Heat Load Zoning Configurations for each 24PTH DSC	Per Figure P.2-1 or Figure P.2-2 or Figure P.2-3 or Figure P.2-4 or Figure P.2-5.
Burnup, Enrichment, and Minimum Cooling Time for Configuration 1 (Without CCs)	Per Table P.2-6 for Zone 1 fuel.
Burnup, Enrichment, and Minimum Cooling Time for Configuration 2 (Without CCs)	Per Table P.2-7 for Zone 2 fuel.
Burnup, Enrichment, and Minimum Cooling Time for Configuration 3 (Without CCs)	Per Table P.2-7 for Zone 2 fuel and Table P.2-8 for Zone 3 fuel.
Burnup, Enrichment, and Minimum Cooling Time for Configuration 4 (Without CCs)	Per Table P.2-9 for Zone 4 fuel.
Burnup, Enrichment, and Minimum Cooling Time for Configuration 5 (Without CCs)	Per Table P.2-8 for Zone 3 fuel and Table P.2-9 for Zone 4 fuel.
Burnup, Enrichment, and Minimum Cooling Time for Configuration 1 (With CCs)	Per Table P.2-10 for Zone 1 fuel.
Burnup, Enrichment, and Minimum Cooling Time for Configuration 2 (With CCs)	Per Table P.2-11 for Zone 2 fuel.
Burnup, Enrichment, and Minimum Cooling Time for Configuration 3 (With CCs)	Per Table P.2-11 for Zone 2 fuel and per Table P.2-12 for Zone 3 fuel.
Burnup, Enrichment, and Minimum Cooling Time for Configuration 4 (With CCs)	Per Table P.2-13 for Zone 4 fuel.
Burnup, Enrichment, and Minimum Cooling Time for Configuration 5 (With CCs)	Per Table P.2-12 for Zone 3 fuel and per Table P.2-13 for Zone 4 fuel.
Maximum Initial Fuel Enrichment	5.0 wt. % U-235
Maximum Decay Heat Limits for Zones 1, 2, 3, and 4 Fuel	Per Figure P.2-1 or Figure P.2-2 or Figure P.2-3 or Figure P.2-4 or Figure P.2-5.
Decay Heat per DSC	≤ 40.8 kW for 24PTH-S and 24PTH-L DSCs (Type 1 Basket)
	≤ 31.2 kW for 24PTH-S and 24PTH-L DSCs (Type 2 Basket)
	≤ 24.0 kW for 24PTH-S-L DSC (Type 2 Basket)
Maximum Boron Loading	Per Table P.2-20

Table P.2-2
Thermal and Radiological Characteristics for Control Components Stored in the NUHOMS® -24PTH DSC

Parameter	BPRAs, NSAs, CRAs and APSRAs	TPAs and ORAs
Maximum Gamma Source (γ/sec/DSC)	9.3E+14	9.8E+13
Decay Heat (Watts/DSC)	192.0	192.0

Table P.2-3
PWR Fuel Assembly Design Characteristics for the NUHOMS®-24PTH DSC

Assembly Class		B&W 15x15	WE 17x17	CE 15x15	WE 15x15	CE 14x14	WE 14x14
Max Unirradiated Length (in)(1)	24PTH-S	165.75	165.75	165.75	165.75	165.75	165.75
	24PTH-L	171.93	171.93	171.93	171.93	171.93	171.93
	24PTH-S-LC	171.93	NA(3)	NA(3)	NA(3)	NA(3)	NA(3)
Fissile Material		UO_2	UO_2	UO_2	UO_2	UO_2	UO_2
Maximum MTU/Assembly(2)		0.49	0.49	0.49	0.49	0.49	0.49
Maximum Number of Fuel Rods		208	264	216	204	176	179
Maximum Number of Guide/ Instrument Tubes		17	25	9	21	5	17

(1) Maximum Assembly + Control Component Length (unirradiated)
(2) The maximum MTU/assembly is based on the shielding analysis. The listed value is higher than the actual.
(3) Not Authorized.

Table P.2-4
Maximum Assembly Average Initial Enrichment v/s Neutron Poison Requirements for 24PTH DSC (Intact Fuel)

Fuel Assembly Class	Maximum Assembly Average Initial Enrichment (wt. % U-235) as a Function of Soluble Boron Concentration and Basket Type (Fixed Poison Loading)			
	Minimum Soluble Boron (ppm)	Basket Type		
		1A or 2A	1B or 2B	1C or 2C
CE 14x14 (1)	2100	4.50	4.90	NR
	2200	4.60	5.00	NR
	2300	4.70	NR	NR
	2400	4.80	NR	NR
	2500	4.90	NR	NR
	2600	5.00	NR	NR
WE 14x14 (2)	2100	4.80	5.00	NR
	2200	4.90	NR	NR
	2300	5.00	NR	NR
CE 15x15 (2)	2100	3.90	4.20	4.60
	2200	4.00	4.40	4.70
	2300	4.10	4.50	4.80
	2400	4.20	4.60	4.90
	2500	4.30	4.70	5.00
	2600	4.40	4.80	NR
	2700	4.50	4.90	NR
	2800	4.50	5.00	NR
	2900	4.60	NR	NR
	3000	4.70	NR	NR
WE 15x15 (2)	2100	3.80	4.20	4.60
	2200	3.90	4.30	4.70
	2300	4.00	4.40	4.80
	2400	4.10	4.50	4.90
	2500	4.20	4.60	5.00
	2600	4.30	4.70	NR
	2700	4.30	4.80	NR
	2800	4.40	4.90	NR
	2900	4.50	5.00	NR
	3000	4.60	NR	NR

Table P.2-4
Maximum Assembly Average Initial Enrichment v/s Neutron Poison Requirements for 24PTH DSC (Intact Fuel)

(Concluded)

Fuel Assembly Class	Maximum Assembly Average Initial Enrichment (wt. % U-235) as a Function of Soluble Boron Concentration and Basket Type (Fixed Poison Loading)			
	Minimum Soluble Boron (ppm)	Basket Type		
		1A or 2A	1B or 2B	1C or 2C
WE 17x17 (2)	2100	3.80	4.10	4.50
	2200	3.90	4.20	4.60
	2300	4.00	4.30	4.70
	2400	4.00	4.40	4.80
	2500	4.10	4.50	4.90
	2600	4.20	4.60	5.00
	2700	4.30	4.70	NR
	2800	4.40	4.80	NR
	2900	4.50	4.90	NR
	3000	4.60	5.00	NR
B&W 15x15 (2)	2100	3.60	4.00	4.30
	2200	3.70	4.10	4.50
	2300	3.80	4.20	4.60
	2400	3.90	4.30	4.70
	2500	4.00	4.40	4.80
	2600	4.10	4.50	4.90
	2700	4.20	4.60	5.00
	2800	4.20	4.70	NR
	2900	4.30	4.80	NR
	3000	4.40	4.90	NR

Notes:

(1) When CCs that extend into the active fuel region are stored, the maximum assembly average initial enrichment shall be reduced by 0.2 wt. %.

(2) When CCs that extend into the active fuel region are stored, the maximum assembly average initial enrichment shall be reduced by 0.05 wt. % or the soluble boron concentration shall be increased by 50 ppm.

Note: NR = Not Required.

Table P.2-5
Maximum Assembly Average Initial Enrichment v/s Neutron Poison Requirements for 24PTH DSC (Damaged Fuel)

Fuel Assembly Class	Maximum Number of Damaged Fuel Assemblies per DSC	Maximum Assembly Average Initial Enrichment (wt. % U-235) as a Function of Soluble Boron Concentration and Basket Type (Fixed Poison Loading)			
		Minimum Soluble Boron (ppm)	Basket Type		
			1A or 2A	1B or 2B	1C or 2C
CE 14x14 (1)	8	2150	NR	4.80	NR
	12	2150	NR	4.70	NR
	12	2450	4.50	5.00	NR
WE 14x14 (2)	12	2150	4.50	5.00	NR
CE 15x15 (2)	12	2150	NR	NR	4.50
	12	2550	NR	NR	5.00
WE 15x15 (2)	8	2150	NR	NR	4.50
	12	2250	NR	NR	4.50
	8	2550	NR	NR	5.00
	12	2650	NR	NR	5.00
WE 17x17 (2)	12	2250	NR	NR	4.50
	12	2650	NR	NR	5.00
B&W 15x15 (2)	12	2350	NR	NR	4.50
	12	2800	NR	NR	5.00

Notes:

(1) When CCs that extend into the active fuel region are stored, the maximum assembly average initial enrichment shall be reduced by 0.2 wt. %.

(2) When CCs that extend into the active fuel region are stored, the maximum assembly average initial enrichment shall be reduced by 0.05 wt. % or the soluble boron concentration shall be increased by 50 ppm.

Note: NR = Not Required.

Table P.2-6

PWR Fuel Qualification Table for Zone 1 Fuel with 1.7 kW per Assembly for the NUHOMS®-24PTH DSC (Fuel w/o CCs)

(Minimum required years of cooling time after reactor core discharge)

Burn-Up, GWD/MT	Assembly Average Initial U-235 Enrichment, wt %																															
	1.5	2.0	2.1	2.2	2.3	2.4	2.5	2.6	2.7	2.8	2.9	3.0	3.1	3.2	3.3	3.4	3.5	3.6	3.7	3.8	3.9	4.0	4.1	4.2	4.3	4.4	4.5	4.6	4.7	4.8	4.9	5.0
10	3.0	3.0	3.0	3.0	3.0	3.0	3.0	3.0	3.0	3.0	3.0	3.0	3.0	3.0	3.0	3.0	3.0	3.0	3.0	3.0	3.0	3.0	3.0	3.0	3.0	3.0	3.0	3.0	3.0	3.0	3.0	3.0
15	3.0	3.0	3.0	3.0	3.0	3.0	3.0	3.0	3.0	3.0	3.0	3.0	3.0	3.0	3.0	3.0	3.0	3.0	3.0	3.0	3.0	3.0	3.0	3.0	3.0	3.0	3.0	3.0	3.0	3.0	3.0	3.0
20	3.0	3.0	3.0	3.0	3.0	3.0	3.0	3.0	3.0	3.0	3.0	3.0	3.0	3.0	3.0	3.0	3.0	3.0	3.0	3.0	3.0	3.0	3.0	3.0	3.0	3.0	3.0	3.0	3.0	3.0	3.0	3.0
25			3.0	3.0	3.0	3.0	3.0	3.0	3.0	3.0	3.0	3.0	3.0	3.0	3.0	3.0	3.0	3.0	3.0	3.0	3.0	3.0	3.0	3.0	3.0	3.0	3.0	3.0	3.0	3.0	3.0	3.0
28				3.0	3.0	3.0	3.0	3.0	3.0	3.0	3.0	3.0	3.0	3.0	3.0	3.0	3.0	3.0	3.0	3.0	3.0	3.0	3.0	3.0	3.0	3.0	3.0	3.0	3.0	3.0	3.0	3.0
30							3.0	3.0	3.0	3.0	3.0	3.0	3.0	3.0	3.0	3.0	3.0	3.0	3.0	3.0	3.0	3.0	3.0	3.0	3.0	3.0	3.0	3.0	3.0	3.0	3.0	3.0
32								3.0	3.0	3.0	3.0	3.0	3.0	3.0	3.0	3.0	3.0	3.0	3.0	3.0	3.0	3.0	3.0	3.0	3.0	3.0	3.0	3.0	3.0	3.0	3.0	3.0
34									3.0	3.0	3.0	3.0	3.0	3.0	3.0	3.0	3.0	3.0	3.0	3.0	3.0	3.0	3.0	3.0	3.0	3.0	3.0	3.0	3.0	3.0	3.0	3.0
36										3.5	3.5	3.5	3.0	3.0	3.0	3.0	3.0	3.0	3.0	3.0	3.0	3.0	3.0	3.0	3.0	3.0	3.0	3.0	3.0	3.0	3.0	3.0
38												3.5	3.5	3.5	3.5	3.5	3.5	3.5	3.5	3.5	3.5	3.5	3.5	3.5	3.0	3.0	3.0	3.0	3.0	3.0	3.0	3.0
39												3.5	3.5	3.5	3.5	3.5	3.5	3.5	3.5	3.5	3.5	3.5	3.5	3.5	3.5	3.5	3.5	3.5	3.5	3.5	3.5	3.5
40												3.5	3.5	3.5	3.5	3.5	3.5	3.5	3.5	3.5	3.5	3.5	3.5	3.5	3.5	3.5	3.5	3.5	3.5	3.5	3.5	3.5
41												4.0	4.0	3.5	3.5	3.5	3.5	3.5	3.5	3.5	3.5	3.5	3.5	3.5	3.5	3.5	3.5	3.5	3.5	3.5	3.5	3.5
42												4.0	4.0	4.0	4.0	4.0	4.0	4.0	3.5	3.5	3.5	3.5	3.5	3.5	3.5	3.5	3.5	3.5	3.5	3.5	3.5	3.5
43												4.0	4.0	4.0	4.0	4.0	4.0	4.0	4.0	4.0	4.0	4.0	4.0	4.0	3.5	3.5	3.5	3.5	3.5	3.5	3.5	3.5
44												4.0	4.0	4.0	4.0	4.0	4.0	4.0	4.0	4.0	4.0	4.0	4.0	4.0	4.0	4.0	4.0	4.0	4.0	4.0	4.0	4.0
45														4.0	4.0	4.0	4.0	4.0	4.0	4.0	4.0	4.0	4.0	4.0	4.0	4.0	4.0	4.0	4.0	4.0	4.0	4.0
46														4.5	4.5	4.5	4.5	4.0	4.0	4.0	4.0	4.0	4.0	4.0	4.0	4.0	4.0	4.0	4.0	4.0	4.0	4.0
47														4.5	4.5	4.5	4.5	4.5	4.5	4.5	4.5	4.5	4.0	4.0	4.0	4.0	4.0	4.0	4.0	4.0	4.0	4.0
48														4.5	4.5	4.5	4.5	4.5	4.5	4.5	4.5	4.5	4.5	4.5	4.5	4.5	4.5	4.5	4.0	4.0	4.0	4.0
49														4.5	4.5	4.5	4.5	4.5	4.5	4.5	4.5	4.5	4.5	4.5	4.5	4.5	4.5	4.5	4.5	4.5	4.5	4.5
50																5.0	5.0	5.0	4.5	4.5	4.5	4.5	4.5	4.5	4.5	4.5	4.5	4.5	4.5	4.5	4.5	4.5
51																5.0	5.0	5.0	5.0	5.0	5.0	5.0	4.5	4.5	4.5	4.5	4.5	4.5	4.5	4.5	4.5	4.5
52																5.0	5.0	5.0	5.0	5.0	5.0	5.0	5.0	5.0	5.0	5.0	5.0	5.0	4.5	4.5	4.5	4.5
53																5.5	5.0	5.0	5.0	5.0	5.0	5.0	5.0	5.0	5.0	5.0	5.0	5.0	5.0	5.0	5.0	5.0
54																5.5	5.5	5.5	5.5	5.5	5.5	5.5	5.0	5.0	5.0	5.0	5.0	5.0	5.0	5.0	5.0	5.0
55																5.5	5.5	5.5	5.5	5.5	5.5	5.5	5.5	5.5	5.5	5.5	5.0	5.0	5.0	5.0	5.0	5.0
56																6.0	6.0	5.5	5.5	5.5	5.5	5.5	5.5	5.5	5.5	5.5	5.5	5.5	5.5	5.5	5.5	5.0
57																6.0	6.0	6.0	6.0	6.0	6.0	5.5	5.5	5.5	5.5	5.5	5.5	5.5	5.5	5.5	5.5	5.5
58																6.0	6.0	6.0	6.0	6.0	6.0	6.0	6.0	6.0	6.0	6.0	5.5	5.5	5.5	5.5	5.5	5.5
59																6.5	6.5	6.5	6.5	6.0	6.0	6.0	6.0	6.0	6.0	6.0	6.0	6.0	6.0	6.0	6.0	5.5
60																6.5	6.5	6.5	6.5	6.5	6.5	6.5	6.5	6.5	6.0	6.0	6.0	6.0	6.0	6.0	6.0	6.0
61																7.0	7.0	7.0	6.5	6.5	6.5	6.5	6.5	6.5	6.5	6.5	6.5	6.0	6.0	6.0	6.0	6.0
62																7.0	7.0	7.0	7.0	7.0	7.0	7.0	6.5	6.5	6.5	6.5	6.5	6.5	6.5	6.5	6.5	6.5

Not Analyzed

Note: If stainless steel reconstituted rods are present in the fuel assembly, add an additional year of cooling time.

Note: Page P.2-34 provides the explanatory notes and limitations regarding the use of this Table.

Table P.2-7

PWR Fuel Qualification Table for Zone 2 Fuel with 2.0 kW per Assembly for the NUHOMS®-24PTH DSC (Fuel w/o CCs)

(Minimum required years of cooling time after reactor core discharge)

Burn-Up, GWD/MT	Assembly Average Initial U-235 Enrichment, wt %																														
	1.5	2.0	2.1	2.2	2.3	2.4	2.5	2.6	2.7	2.8	2.9	3.0	3.1	3.2	3.3	3.4	3.5	3.6	3.7	3.8	3.9	4.0	4.1	4.2	4.3	4.4	4.5	4.6	4.7	4.8	4.9	5.0
10	3.0	3.0	3.0	3.0	3.0	3.0	3.0	3.0	3.0	3.0	3.0	3.0	3.0	3.0	3.0	3.0	3.0	3.0	3.0	3.0	3.0	3.0	3.0	3.0	3.0	3.0	3.0	3.0	3.0	3.0	3.0	3.0
15	3.0	3.0	3.0	3.0	3.0	3.0	3.0	3.0	3.0	3.0	3.0	3.0	3.0	3.0	3.0	3.0	3.0	3.0	3.0	3.0	3.0	3.0	3.0	3.0	3.0	3.0	3.0	3.0	3.0	3.0	3.0	3.0
20	3.0	3.0	3.0	3.0	3.0	3.0	3.0	3.0	3.0	3.0	3.0	3.0	3.0	3.0	3.0	3.0	3.0	3.0	3.0	3.0	3.0	3.0	3.0	3.0	3.0	3.0	3.0	3.0	3.0	3.0	3.0	3.0
25			3.0	3.0	3.0	3.0	3.0	3.0	3.0	3.0	3.0	3.0	3.0	3.0	3.0	3.0	3.0	3.0	3.0	3.0	3.0	3.0	3.0	3.0	3.0	3.0	3.0	3.0	3.0	3.0	3.0	3.0
28				3.0	3.0	3.0	3.0	3.0	3.0	3.0	3.0	3.0	3.0	3.0	3.0	3.0	3.0	3.0	3.0	3.0	3.0	3.0	3.0	3.0	3.0	3.0	3.0	3.0	3.0	3.0	3.0	3.0
30							3.0	3.0	3.0	3.0	3.0	3.0	3.0	3.0	3.0	3.0	3.0	3.0	3.0	3.0	3.0	3.0	3.0	3.0	3.0	3.0	3.0	3.0	3.0	3.0	3.0	3.0
32								3.0	3.0	3.0	3.0	3.0	3.0	3.0	3.0	3.0	3.0	3.0	3.0	3.0	3.0	3.0	3.0	3.0	3.0	3.0	3.0	3.0	3.0	3.0	3.0	3.0
34									3.0	3.0	3.0	3.0	3.0	3.0	3.0	3.0	3.0	3.0	3.0	3.0	3.0	3.0	3.0	3.0	3.0	3.0	3.0	3.0	3.0	3.0	3.0	3.0
36										3.0	3.0	3.0	3.0	3.0	3.0	3.0	3.0	3.0	3.0	3.0	3.0	3.0	3.0	3.0	3.0	3.0	3.0	3.0	3.0	3.0	3.0	3.0
38												3.0	3.0	3.0	3.0	3.0	3.0	3.0	3.0	3.0	3.0	3.0	3.0	3.0	3.0	3.0	3.0	3.0	3.0	3.0	3.0	3.0
39												3.0	3.0	3.0	3.0	3.0	3.0	3.0	3.0	3.0	3.0	3.0	3.0	3.0	3.0	3.0	3.0	3.0	3.0	3.0	3.0	3.0
40												3.0	3.0	3.0	3.0	3.0	3.0	3.0	3.0	3.0	3.0	3.0	3.0	3.0	3.0	3.0	3.0	3.0	3.0	3.0	3.0	3.0
41												3.5	3.5	3.5	3.0	3.0	3.0	3.0	3.0	3.0	3.0	3.0	3.0	3.0	3.0	3.0	3.0	3.0	3.0	3.0	3.0	3.0
42												3.5	3.5	3.5	3.5	3.5	3.5	3.5	3.5	3.5	3.0	3.0	3.0	3.0	3.0	3.0	3.0	3.0	3.0	3.0	3.0	3.0
43												3.5	3.5	3.5	3.5	3.5	3.5	3.5	3.5	3.5	3.5	3.5	3.5	3.5	3.5	3.5	3.0	3.0	3.0	3.0	3.0	3.0
44												3.5	3.5	3.5	3.5	3.5	3.5	3.5	3.5	3.5	3.5	3.5	3.5	3.5	3.5	3.5	3.5	3.5	3.5	3.5	3.5	3.5
45														3.5	3.5	3.5	3.5	3.5	3.5	3.5	3.5	3.5	3.5	3.5	3.5	3.5	3.5	3.5	3.5	3.5	3.5	3.5
46														3.5	3.5	3.5	3.5	3.5	3.5	3.5	3.5	3.5	3.5	3.5	3.5	3.5	3.5	3.5	3.5	3.5	3.5	3.5
47														4.0	4.0	4.0	4.0	4.0	3.5	3.5	3.5	3.5	3.5	3.5	3.5	3.5	3.5	3.5	3.5	3.5	3.5	3.5
48														4.0	4.0	4.0	4.0	4.0	4.0	4.0	4.0	4.0	4.0	3.5	3.5	3.5	3.5	3.5	3.5	3.5	3.5	3.5
49														4.0	4.0	4.0	4.0	4.0	4.0	4.0	4.0	4.0	4.0	4.0	4.0	4.0	4.0	4.0	4.0	3.5	3.5	3.5
50																4.0	4.0	4.0	4.0	4.0	4.0	4.0	4.0	4.0	4.0	4.0	4.0	4.0	4.0	4.0	4.0	4.0
51																4.0	4.0	4.0	4.0	4.0	4.0	4.0	4.0	4.0	4.0	4.0	4.0	4.0	4.0	4.0	4.0	4.0
52																4.5	4.5	4.5	4.5	4.0	4.0	4.0	4.0	4.0	4.0	4.0	4.0	4.0	4.0	4.0	4.0	4.0
53																4.5	4.5	4.5	4.5	4.5	4.5	4.5	4.5	4.5	4.0	4.0	4.0	4.0	4.0	4.0	4.0	4.0
54																4.5	4.5	4.5	4.5	4.5	4.5	4.5	4.5	4.5	4.5	4.5	4.5	4.5	4.5	4.5	4.0	4.0
55																4.5	4.5	4.5	4.5	4.5	4.5	4.5	4.5	4.5	4.5	4.5	4.5	4.5	4.5	4.5	4.5	4.5
56																5.0	5.0	5.0	5.0	5.0	5.0	5.0	5.0	5.0	5.0	5.0	5.0	5.0	4.5	4.5	4.5	4.5
57																5.0	5.0	5.0	5.0	5.0	5.0	5.0	5.0	5.0	5.0	5.0	5.0	5.0	5.0	5.0	5.0	5.0
58																5.0	5.0	5.0	5.0	5.0	5.0	5.0	5.0	5.0	5.0	5.0	5.0	5.0	5.0	5.0	5.0	5.0
59																5.5	5.5	5.0	5.0	5.0	5.0	5.0	5.0	5.0	5.0	5.0	5.0	5.0	5.0	5.0	5.0	5.0
60																6.0	5.5	5.5	5.5	5.5	5.0	5.0	5.0	5.0	5.0	5.0	5.0	5.0	5.0	5.0	5.0	5.0
61																5.5	5.5	5.5	5.5	5.5	5.5	5.5	5.5	5.5	5.5	5.5	5.5	5.5	5.5	5.5	5.5	5.5
62																6.0	5.5	5.5	5.5	5.5	5.5	5.5	5.5	5.5	5.5	5.5	5.5	5.5	5.5	5.5	5.5	5.5

Not Analyzed

Note: If stainless steel reconstituted rods are present in the fuel assembly, add an additional year of cooling time.

Note: Page P.2-34 provides the explanatory Notes and limitations regarding the use of this Table.

Table P.2-8

PWR Fuel Qualification Table for Zone 3 Fuel with 1.5 kW per Assembly for the NUHOMS®-24PTH DSC (Fuel w/o CCs)

(Minimum required years of cooling time after reactor core discharge)

Burn-Up, GWD/MT	Assembly Average Initial U-235 Enrichment, wt %																														
	1.5	2.0	2.1	2.2	2.3	2.4	2.5	2.6	2.7	2.8	2.9	3.0	3.1	3.2	3.3	3.4	3.5	3.6	3.7	3.8	3.9	4.0	4.1	4.2	4.3	4.4	4.5	4.6	4.7	4.8	4.9	5.0
10	3.0	3.0	3.0	3.0	3.0	3.0	3.0	3.0	3.0	3.0	3.0	3.0	3.0	3.0	3.0	3.0	3.0	3.0	3.0	3.0	3.0	3.0	3.0	3.0	3.0	3.0	3.0	3.0	3.0	3.0	3.0	3.0
15	3.0	3.0	3.0	3.0	3.0	3.0	3.0	3.0	3.0	3.0	3.0	3.0	3.0	3.0	3.0	3.0	3.0	3.0	3.0	3.0	3.0	3.0	3.0	3.0	3.0	3.0	3.0	3.0	3.0	3.0	3.0	3.0
20	3.0	3.0	3.0	3.0	3.0	3.0	3.0	3.0	3.0	3.0	3.0	3.0	3.0	3.0	3.0	3.0	3.0	3.0	3.0	3.0	3.0	3.0	3.0	3.0	3.0	3.0	3.0	3.0	3.0	3.0	3.0	3.0
25			3.0	3.0	3.0	3.0	3.0	3.0	3.0	3.0	3.0	3.0	3.0	3.0	3.0	3.0	3.0	3.0	3.0	3.0	3.0	3.0	3.0	3.0	3.0	3.0	3.0	3.0	3.0	3.0	3.0	3.0
28				3.0	3.0	3.0	3.0	3.0	3.0	3.0	3.0	3.0	3.0	3.0	3.0	3.0	3.0	3.0	3.0	3.0	3.0	3.0	3.0	3.0	3.0	3.0	3.0	3.0	3.0	3.0	3.0	3.0
30							3.0	3.0	3.0	3.0	3.0	3.0	3.0	3.0	3.0	3.0	3.0	3.0	3.0	3.0	3.0	3.0	3.0	3.0	3.0	3.0	3.0	3.0	3.0	3.0	3.0	3.0
32								3.0	3.0	3.0	3.0	3.0	3.0	3.0	3.0	3.0	3.0	3.0	3.0	3.0	3.0	3.0	3.0	3.0	3.0	3.0	3.0	3.0	3.0	3.0	3.0	3.0
34									3.5	3.5	3.5	3.5	3.5	3.5	3.5	3.5	3.5	3.5	3.5	3.5	3.0	3.0	3.0	3.0	3.0	3.0	3.0	3.0	3.0	3.0	3.0	3.0
36										3.5	3.5	3.5	3.5	3.5	3.5	3.5	3.5	3.5	3.5	3.5	3.5	3.5	3.5	3.5	3.5	3.5	3.5	3.5	3.5	3.5	3.5	3.5
38												4.0	4.0	4.0	4.0	4.0	3.5	3.5	3.5	3.5	3.5	3.5	3.5	3.5	3.5	3.5	3.5	3.5	3.5	3.5	3.5	3.5
39												4.0	4.0	4.0	4.0	4.0	4.0	4.0	4.0	4.0	4.0	4.0	3.5	3.5	3.5	3.5	3.5	3.5	3.5	3.5	3.5	3.5
40												4.0	4.0	4.0	4.0	4.0	4.0	4.0	4.0	4.0	4.0	4.0	4.0	4.0	4.0	4.0	4.0	4.0	4.0	4.0	4.0	3.5
41												4.0	4.0	4.0	4.0	4.0	4.0	4.0	4.0	4.0	4.0	4.0	4.0	4.0	4.0	4.0	4.0	4.0	4.0	4.0	4.0	4.0
42												4.5	4.5	4.5	4.5	4.5	4.0	4.0	4.0	4.0	4.0	4.0	4.0	4.0	4.0	4.0	4.0	4.0	4.0	4.0	4.0	4.0
43												4.5	4.5	4.5	4.5	4.5	4.5	4.5	4.5	4.5	4.5	4.0	4.0	4.0	4.0	4.0	4.0	4.0	4.0	4.0	4.0	4.0
44												4.5	4.5	4.5	4.5	4.5	4.5	4.5	4.5	4.5	4.5	4.5	4.5	4.5	4.5	4.5	4.5	4.5	4.0	4.0	4.0	4.0
45														4.5	4.5	4.5	4.5	4.5	4.5	4.5	4.5	4.5	4.5	4.5	4.5	4.5	4.5	4.5	4.5	4.5	4.5	4.5
46														5.0	5.0	5.0	5.0	5.0	4.5	4.5	4.5	4.5	4.5	4.5	4.5	4.5	4.5	4.5	4.5	4.5	4.5	4.5
47														5.0	5.0	5.0	5.0	5.0	5.0	5.0	5.0	5.0	5.0	4.5	4.5	4.5	4.5	4.5	4.5	4.5	4.5	4.5
48														5.0	5.0	5.0	5.0	5.0	5.0	5.0	5.0	5.0	5.0	5.0	5.0	5.0	5.0	5.0	5.0	5.0	4.5	4.5
49														5.5	5.5	5.5	5.5	5.0	5.0	5.0	5.0	5.0	5.0	5.0	5.0	5.0	5.0	5.0	5.0	5.0	5.0	5.0
50																5.5	5.5	5.5	5.5	5.5	5.5	5.5	5.0	5.0	5.0	5.0	5.0	5.0	5.0	5.0	5.0	5.0
51																5.5	5.5	5.5	5.5	5.5	5.5	5.5	5.5	5.5	5.5	5.5	5.5	5.5	5.5	5.0	5.0	5.0
52																6.0	6.0	6.0	5.5	5.5	5.5	5.5	5.5	5.5	5.5	5.5	5.5	5.5	5.5	5.5	5.5	5.5
53																6.0	6.0	6.0	6.0	6.0	6.0	6.0	6.0	6.0	5.5	5.5	5.5	5.5	5.5	5.5	5.5	5.5
54																6.5	6.5	6.0	6.0	6.0	6.0	6.0	6.0	6.0	6.0	6.0	6.0	6.0	6.0	5.5	5.5	5.5
55																6.5	6.5	6.5	6.5	6.5	6.5	6.5	6.0	6.0	6.0	6.0	6.0	6.0	6.0	6.0	6.0	6.0
56																7.0	6.5	6.5	6.5	6.5	6.5	6.5	6.5	6.5	6.5	6.5	6.5	6.0	6.0	6.0	6.0	6.0
57																7.0	7.0	7.0	7.0	7.0	7.0	6.5	6.5	6.5	6.5	6.5	6.5	6.5	6.5	6.5	6.5	6.5
58																7.5	7.5	7.5	7.0	7.0	7.0	7.0	7.0	7.0	7.0	7.0	6.5	6.5	6.5	6.5	6.5	6.5
59																7.5	7.5	7.5	7.5	7.5	7.5	7.5	7.5	7.0	7.0	7.0	7.0	7.0	7.0	7.0	6.5	7.0
60																8.0	8.0	8.0	7.5	7.5	7.5	7.5	7.5	7.5	7.5	7.5	7.5	7.0	7.0	7.0	7.0	7.0
61																8.5	8.0	8.0	8.0	8.0	8.0	8.0	8.0	7.5	7.5	7.5	7.5	7.5	7.5	7.5	7.5	7.5
62																8.5	8.5	8.5	8.5	8.5	8.5	8.0	8.0	8.0	8.0	8.0	8.0	8.0	7.5	7.5	7.5	7.5

Not Analyzed

Note: If stainless steel reconstituted rods are present in the fuel assembly, add an additional year of cooling time.

Note: Page P.2-34 provides the explanatory notes and limitations regarding the use of this Table.

Table P.2-9
PWR Fuel Qualification Table for Zone 4 Fuel with 1.3 kW per Assembly for the NUHOMS®-24PTH DSC (Fuel w/o CCs)

(Minimum required years of cooling time after reactor core discharge)

Burn-Up, GWD/MT	Assembly Average Initial U-235 Enrichment, wt %																														
	1.5	2.0	2.1	2.2	2.3	2.4	2.5	2.6	2.7	2.8	2.9	3.0	3.1	3.2	3.3	3.4	3.5	3.6	3.7	3.8	3.9	4.0	4.1	4.2	4.3	4.4	4.5	4.6	4.7	4.8	4.9	5.0
10	3.0	3.0	3.0	3.0	3.0	3.0	3.0	3.0	3.0	3.0	3.0	3.0	3.0	3.0	3.0	3.0	3.0	3.0	3.0	3.0	3.0	3.0	3.0	3.0	3.0	3.0	3.0	3.0	3.0	3.0	3.0	3.0
15	3.0	3.0	3.0	3.0	3.0	3.0	3.0	3.0	3.0	3.0	3.0	3.0	3.0	3.0	3.0	3.0	3.0	3.0	3.0	3.0	3.0	3.0	3.0	3.0	3.0	3.0	3.0	3.0	3.0	3.0	3.0	3.0
20	3.0	3.0	3.0	3.0	3.0	3.0	3.0	3.0	3.0	3.0	3.0	3.0	3.0	3.0	3.0	3.0	3.0	3.0	3.0	3.0	3.0	3.0	3.0	3.0	3.0	3.0	3.0	3.0	3.0	3.0	3.0	3.0
25			3.0	3.0	3.0	3.0	3.0	3.0	3.0	3.0	3.0	3.0	3.0	3.0	3.0	3.0	3.0	3.0	3.0	3.0	3.0	3.0	3.0	3.0	3.0	3.0	3.0	3.0	3.0	3.0	3.0	3.0
28				3.0	3.0	3.0	3.0	3.0	3.0	3.0	3.0	3.0	3.0	3.0	3.0	3.0	3.0	3.0	3.0	3.0	3.0	3.0	3.0	3.0	3.0	3.0	3.0	3.0	3.0	3.0	3.0	3.0
30							3.5	3.5	3.5	3.5	3.5	3.5	3.5	3.5	3.5	3.0	3.0	3.0	3.0	3.0	3.0	3.0	3.0	3.0	3.0	3.0	3.0	3.0	3.0	3.0	3.0	3.0
32								3.5	3.5	3.5	3.5	3.5	3.5	3.5	3.5	3.5	3.5	3.5	3.5	3.5	3.5	3.5	3.5	3.5	3.5	3.5	3.5	3.5	3.5	3.5	3.5	3.5
34									4.0	4.0	4.0	4.0	4.0	4.0	3.5	3.5	3.5	3.5	3.5	3.5	3.5	3.5	3.5	3.5	3.5	3.5	3.5	3.5	3.5	3.5	3.5	3.5
36										4.0	4.0	4.0	4.0	4.0	4.0	4.0	4.0	4.0	4.0	4.0	4.0	4.0	4.0	4.0	4.0	4.0	4.0	4.0	4.0	4.0	4.0	4.0
38												4.5	4.5	4.5	4.5	4.5	4.0	4.0	4.0	4.0	4.0	4.0	4.0	4.0	4.0	4.0	4.0	4.0	4.0	4.0	4.0	4.0
39												4.5	4.5	4.5	4.5	4.5	4.5	4.5	4.5	4.5	4.5	4.5	4.5	4.5	4.0	4.0	4.0	4.0	4.0	4.0	4.0	4.0
40												4.5	4.5	4.5	4.5	4.5	4.5	4.5	4.5	4.5	4.5	4.5	4.5	4.5	4.5	4.5	4.5	4.5	4.5	4.5	4.5	4.5
41												5.0	5.0	5.0	4.5	4.5	4.5	4.5	4.5	4.5	4.5	4.5	4.5	4.5	4.5	4.5	4.5	4.5	4.5	4.5	4.5	4.5
42												5.0	5.0	5.0	5.0	5.0	5.0	5.0	5.0	5.0	5.0	4.5	4.5	4.5	4.5	4.5	4.5	4.5	4.5	4.5	4.5	4.5
43												5.0	5.0	5.0	5.0	5.0	5.0	5.0	5.0	5.0	5.0	5.0	5.0	5.0	5.0	5.0	5.0	5.0	4.5	4.5	4.5	4.5
44												5.5	5.5	5.5	5.5	5.5	5.0	5.0	5.0	5.0	5.0	5.0	5.0	5.0	5.0	5.0	5.0	5.0	5.0	5.0	5.0	5.0
45														5.5	5.5	5.5	5.5	5.5	5.5	5.5	5.5	5.0	5.0	5.0	5.0	5.0	5.0	5.0	5.0	5.0	5.0	5.0
46														5.5	5.5	5.5	5.5	5.5	5.5	5.5	5.5	5.5	5.5	5.5	5.5	5.5	5.5	5.0	5.0	5.0	5.0	5.0
47														6.0	6.0	6.0	6.0	5.5	5.5	5.5	5.5	5.5	5.5	5.5	5.5	5.5	5.5	5.5	5.5	5.5	5.5	5.5
48														6.0	6.0	6.0	6.0	6.0	6.0	6.0	6.0	6.0	5.5	5.5	5.5	5.5	5.5	5.5	5.5	5.5	5.5	5.5
49														6.5	6.5	6.5	6.5	6.0	6.0	6.0	6.0	6.0	6.0	6.0	6.0	6.0	6.0	6.0	6.0	6.0	6.0	5.5
50																6.5	6.5	6.5	6.5	6.5	6.5	6.5	6.0	6.0	6.0	6.0	6.0	6.0	6.0	6.0	6.0	6.0
51																7.0	7.0	6.5	6.5	6.5	6.5	6.5	6.5	6.5	6.5	6.5	6.5	6.5	6.0	6.0	6.0	6.0
52																7.0	7.0	7.0	7.0	7.0	7.0	7.0	6.5	6.5	6.5	6.5	6.5	6.5	6.5	6.5	6.5	6.5
53																7.5	7.5	7.5	7.0	7.0	7.0	7.0	7.0	7.0	7.0	7.0	7.0	7.0	6.5	6.5	6.5	6.5
54																8.0	7.5	7.5	7.5	7.5	7.5	7.5	7.5	7.0	7.0	7.0	7.0	7.0	7.0	7.0	7.0	7.0
55																8.0	8.0	8.0	8.0	8.0	8.0	7.5	7.5	7.5	7.5	7.5	7.5	7.5	7.5	7.0	7.0	7.0
56																8.5	8.5	8.5	8.5	8.0	8.0	8.0	8.0	8.0	8.0	8.0	7.5	7.5	7.5	7.5	7.5	7.5
57																9.0	9.0	8.5	8.5	8.5	8.5	8.5	8.5	8.0	8.0	8.0	8.0	8.0	8.0	8.0	8.0	8.0
58																9.5	9.5	9.0	9.0	9.0	9.0	9.0	9.0	8.5	8.5	8.5	8.5	8.5	8.5	8.0	8.0	8.0
59																10.0	10.0	9.5	9.5	9.5	9.5	9.5	9.0	9.0	9.0	9.0	9.0	9.0	8.5	8.5	8.5	8.5
60																10.5	10.5	10.0	10.0	10.0	10.0	10.0	9.5	9.5	9.5	9.5	9.5	9.0	9.0	9.0	9.0	9.0
61																11.0	11.0	11.0	10.5	10.5	10.5	10.5	10.0	10.0	10.0	10.0	10.0	10.0	9.5	9.5	9.5	9.5
62																11.5	11.5	11.5	11.5	11.0	11.0	11.0	10.5	10.5	10.5	10.5	10.5	10.0	10.0	10.0	10.0	10.0

Not Analyzed

Note: If stainless steel reconstituted rods are present in the fuel assembly, add an additional year of cooling time for times of less than 10 years.

Note: Page P.2-34 provides the explanatory notes and limitations regarding the use of this Table.

Table P.2-10
PWR Fuel Qualification Table for Zone 1 Fuel with 1.7 kW per Assembly for the NUHOMS®-24PTH DSC (Fuel w/ CCs)

(Minimum required years of cooling time after reactor core discharge)

Burn-Up, GWD/MT	Assembly Average Initial U-235 Enrichment, wt %																														
	1.5	2.0	2.1	2.2	2.3	2.4	2.5	2.6	2.7	2.8	2.9	3.0	3.1	3.2	3.3	3.4	3.5	3.6	3.7	3.8	3.9	4.0	4.1	4.2	4.3	4.4	4.5	4.6	4.7	4.8	4.9	5.0
10	3.0	3.0	3.0	3.0	3.0	3.0	3.0	3.0	3.0	3.0	3.0	3.0	3.0	3.0	3.0	3.0	3.0	3.0	3.0	3.0	3.0	3.0	3.0	3.0	3.0	3.0	3.0	3.0	3.0	3.0	3.0	3.0
15	3.0	3.0	3.0	3.0	3.0	3.0	3.0	3.0	3.0	3.0	3.0	3.0	3.0	3.0	3.0	3.0	3.0	3.0	3.0	3.0	3.0	3.0	3.0	3.0	3.0	3.0	3.0	3.0	3.0	3.0	3.0	3.0
20	3.0	3.0	3.0	3.0	3.0	3.0	3.0	3.0	3.0	3.0	3.0	3.0	3.0	3.0	3.0	3.0	3.0	3.0	3.0	3.0	3.0	3.0	3.0	3.0	3.0	3.0	3.0	3.0	3.0	3.0	3.0	3.0
25			3.0	3.0	3.0	3.0	3.0	3.0	3.0	3.0	3.0	3.0	3.0	3.0	3.0	3.0	3.0	3.0	3.0	3.0	3.0	3.0	3.0	3.0	3.0	3.0	3.0	3.0	3.0	3.0	3.0	3.0
28				3.0	3.0	3.0	3.0	3.0	3.0	3.0	3.0	3.0	3.0	3.0	3.0	3.0	3.0	3.0	3.0	3.0	3.0	3.0	3.0	3.0	3.0	3.0	3.0	3.0	3.0	3.0	3.0	3.0
30							3.0	3.0	3.0	3.0	3.0	3.0	3.0	3.0	3.0	3.0	3.0	3.0	3.0	3.0	3.0	3.0	3.0	3.0	3.0	3.0	3.0	3.0	3.0	3.0	3.0	3.0
32								3.0	3.0	3.0	3.0	3.0	3.0	3.0	3.0	3.0	3.0	3.0	3.0	3.0	3.0	3.0	3.0	3.0	3.0	3.0	3.0	3.0	3.0	3.0	3.0	3.0
34									3.0	3.0	3.0	3.0	3.0	3.0	3.0	3.0	3.0	3.0	3.0	3.0	3.0	3.0	3.0	3.0	3.0	3.0	3.0	3.0	3.0	3.0	3.0	3.0
36										3.5	3.5	3.5	3.0	3.0	3.0	3.0	3.0	3.0	3.0	3.0	3.0	3.0	3.0	3.0	3.0	3.0	3.0	3.0	3.0	3.0	3.0	3.0
38												3.5	3.5	3.5	3.5	3.5	3.5	3.5	3.5	3.5	3.5	3.5	3.5	3.5	3.5	3.5	3.0	3.0	3.0	3.0	3.0	3.0
39												3.5	3.5	3.5	3.5	3.5	3.5	3.5	3.5	3.5	3.5	3.5	3.5	3.5	3.5	3.5	3.5	3.5	3.5	3.5	3.5	3.5
40												3.5	3.5	3.5	3.5	3.5	3.5	3.5	3.5	3.5	3.5	3.5	3.5	3.5	3.5	3.5	3.5	3.5	3.5	3.5	3.5	3.5
41												4.0	4.0	4.0	3.5	3.5	3.5	3.5	3.5	3.5	3.5	3.5	3.5	3.5	3.5	3.5	3.5	3.5	3.5	3.5	3.5	3.5
42												4.0	4.0	4.0	4.0	4.0	4.0	4.0	4.0	4.0	3.5	3.5	3.5	3.5	3.5	3.5	3.5	3.5	3.5	3.5	3.5	3.5
43												4.0	4.0	4.0	4.0	4.0	4.0	4.0	4.0	4.0	4.0	4.0	4.0	4.0	4.0	4.0	4.0	3.5	3.5	3.5	3.5	3.5
44												4.0	4.0	4.0	4.0	4.0	4.0	4.0	4.0	4.0	4.0	4.0	4.0	4.0	4.0	4.0	4.0	4.0	4.0	4.0	4.0	4.0
45														4.0	4.0	4.0	4.0	4.0	4.0	4.0	4.0	4.0	4.0	4.0	4.0	4.0	4.0	4.0	4.0	4.0	4.0	4.0
46														4.5	4.5	4.5	4.5	4.0	4.0	4.0	4.0	4.0	4.0	4.0	4.0	4.0	4.0	4.0	4.0	4.0	4.0	4.0
47														4.5	4.5	4.5	4.5	4.5	4.5	4.5	4.5	4.5	4.5	4.0	4.0	4.0	4.0	4.0	4.0	4.0	4.0	4.0
48														4.5	4.5	4.5	4.5	4.5	4.5	4.5	4.5	4.5	4.5	4.5	4.5	4.5	4.5	4.5	4.5	4.0	4.0	4.0
49														4.5	4.5	4.5	4.5	4.5	4.5	4.5	4.5	4.5	4.5	4.5	4.5	4.5	4.5	4.5	4.5	4.5	4.5	4.5
50																5.0	5.0	5.0	5.0	4.5	4.5	4.5	4.5	4.5	4.5	4.5	4.5	4.5	4.5	4.5	4.5	4.5
51																5.0	5.0	5.0	5.0	5.0	5.0	5.0	5.0	5.0	4.5	4.5	4.5	4.5	4.5	4.5	4.5	4.5
52																5.0	5.0	5.0	5.0	5.0	5.0	5.0	5.0	5.0	5.0	5.0	5.0	5.0	5.0	4.5	4.5	4.5
53																5.5	5.5	5.0	5.0	5.0	5.0	5.0	5.0	5.0	5.0	5.0	5.0	5.0	5.0	5.0	5.0	5.0
54																5.5	5.5	5.5	5.5	5.5	5.5	5.5	5.0	5.0	5.0	5.0	5.0	5.0	5.0	5.0	5.0	5.0
55																5.5	5.5	5.5	5.5	5.5	5.5	5.5	5.5	5.5	5.5	5.5	5.5	5.0	5.0	5.0	5.0	5.0
56																6.0	6.0	6.0	5.5	5.5	5.5	5.5	5.5	5.5	5.5	5.5	5.5	5.5	5.5	5.5	5.5	5.5
57																6.0	6.0	6.0	6.0	6.0	6.0	6.0	5.5	5.5	5.5	5.5	5.5	5.5	5.5	5.5	5.5	5.5
58																6.5	6.0	6.0	6.0	6.0	6.0	6.0	6.0	6.0	6.0	6.0	5.5	5.5	5.5	5.5	5.5	5.5
59																6.5	6.5	6.5	6.5	6.5	6.0	6.0	6.0	6.0	6.0	6.0	6.0	6.0	6.0	6.0	6.0	6.0
60																6.5	6.5	6.5	6.5	6.5	6.5	6.5	6.5	6.5	6.0	6.0	6.0	6.0	6.0	6.0	6.0	6.0
61																7.0	7.0	7.0	7.0	6.5	6.5	6.5	6.5	6.5	6.5	6.5	6.5	6.5	6.5	6.0	6.0	6.0
62																7.0	7.0	7.0	7.0	7.0	7.0	7.0	7.0	6.5	6.5	6.5	6.5	6.5	6.5	6.5	6.5	6.5

Not Analyzed

Note: If stainless steel reconstituted rods are present in the fuel assembly, add an additional year of cooling time.

Note: Page P.2-34 provides the explanatory notes and limitations regarding the use of this Table.

Table P.2-11
PWR Fuel Qualification Table for Zone 2 Fuel with 2.0 kW per Assembly for the NUHOMS®-24PTH DSC (Fuel w/ CCs)

(Minimum required years of cooling time after reactor core discharge)

Burn-Up, GWD/MT	Assembly Average Initial U-235 Enrichment, wt %																														
	1.5	2.0	2.1	2.2	2.3	2.4	2.5	2.6	2.7	2.8	2.9	3.0	3.1	3.2	3.3	3.4	3.5	3.6	3.7	3.8	3.9	4.0	4.1	4.2	4.3	4.4	4.5	4.6	4.7	4.8	4.9	5.0
10	3.0	3.0	3.0	3.0	3.0	3.0	3.0	3.0	3.0	3.0	3.0	3.0	3.0	3.0	3.0	3.0	3.0	3.0	3.0	3.0	3.0	3.0	3.0	3.0	3.0	3.0	3.0	3.0	3.0	3.0	3.0	3.0
15	3.0	3.0	3.0	3.0	3.0	3.0	3.0	3.0	3.0	3.0	3.0	3.0	3.0	3.0	3.0	3.0	3.0	3.0	3.0	3.0	3.0	3.0	3.0	3.0	3.0	3.0	3.0	3.0	3.0	3.0	3.0	3.0
20	3.0	3.0	3.0	3.0	3.0	3.0	3.0	3.0	3.0	3.0	3.0	3.0	3.0	3.0	3.0	3.0	3.0	3.0	3.0	3.0	3.0	3.0	3.0	3.0	3.0	3.0	3.0	3.0	3.0	3.0	3.0	3.0
25			3.0	3.0	3.0	3.0	3.0	3.0	3.0	3.0	3.0	3.0	3.0	3.0	3.0	3.0	3.0	3.0	3.0	3.0	3.0	3.0	3.0	3.0	3.0	3.0	3.0	3.0	3.0	3.0	3.0	3.0
28				3.0	3.0	3.0	3.0	3.0	3.0	3.0	3.0	3.0	3.0	3.0	3.0	3.0	3.0	3.0	3.0	3.0	3.0	3.0	3.0	3.0	3.0	3.0	3.0	3.0	3.0	3.0	3.0	3.0
30							3.0	3.0	3.0	3.0	3.0	3.0	3.0	3.0	3.0	3.0	3.0	3.0	3.0	3.0	3.0	3.0	3.0	3.0	3.0	3.0	3.0	3.0	3.0	3.0	3.0	3.0
32								3.0	3.0	3.0	3.0	3.0	3.0	3.0	3.0	3.0	3.0	3.0	3.0	3.0	3.0	3.0	3.0	3.0	3.0	3.0	3.0	3.0	3.0	3.0	3.0	3.0
34									3.0	3.0	3.0	3.0	3.0	3.0	3.0	3.0	3.0	3.0	3.0	3.0	3.0	3.0	3.0	3.0	3.0	3.0	3.0	3.0	3.0	3.0	3.0	3.0
36										3.0	3.0	3.0	3.0	3.0	3.0	3.0	3.0	3.0	3.0	3.0	3.0	3.0	3.0	3.0	3.0	3.0	3.0	3.0	3.0	3.0	3.0	3.0
38												3.0	3.0	3.0	3.0	3.0	3.0	3.0	3.0	3.0	3.0	3.0	3.0	3.0	3.0	3.0	3.0	3.0	3.0	3.0	3.0	3.0
39												3.0	3.0	3.0	3.0	3.0	3.0	3.0	3.0	3.0	3.0	3.0	3.0	3.0	3.0	3.0	3.0	3.0	3.0	3.0	3.0	3.0
40												3.0	3.0	3.0	3.0	3.0	3.0	3.0	3.0	3.0	3.0	3.0	3.0	3.0	3.0	3.0	3.0	3.0	3.0	3.0	3.0	3.0
41												3.5	3.5	3.5	3.5	3.0	3.0	3.0	3.0	3.0	3.0	3.0	3.0	3.0	3.0	3.0	3.0	3.0	3.0	3.0	3.0	3.0
42												3.5	3.5	3.5	3.5	3.5	3.5	3.5	3.5	3.5	3.0	3.0	3.0	3.0	3.0	3.0	3.0	3.0	3.0	3.0	3.0	3.0
43												3.5	3.5	3.5	3.5	3.5	3.5	3.5	3.5	3.5	3.5	3.5	3.5	3.5	3.5	3.5	3.0	3.0	3.0	3.0	3.0	3.0
44												3.5	3.5	3.5	3.5	3.5	3.5	3.5	3.5	3.5	3.5	3.5	3.5	3.5	3.5	3.5	3.5	3.5	3.5	3.5	3.5	3.5
45														3.5	3.5	3.5	3.5	3.5	3.5	3.5	3.5	3.5	3.5	3.5	3.5	3.5	3.5	3.5	3.5	3.5	3.5	3.5
46														4.0	3.5	3.5	3.5	3.5	3.5	3.5	3.5	3.5	3.5	3.5	3.5	3.5	3.5	3.5	3.5	3.5	3.5	3.5
47														4.0	4.0	4.0	4.0	4.0	4.0	3.5	3.5	3.5	3.5	3.5	3.5	3.5	3.5	3.5	3.5	3.5	3.5	3.5
48														4.0	4.0	4.0	4.0	4.0	4.0	4.0	4.0	4.0	4.0	4.0	3.5	3.5	3.5	3.5	3.5	3.5	3.5	3.5
49														4.0	4.0	4.0	4.0	4.0	4.0	4.0	4.0	4.0	4.0	4.0	4.0	4.0	4.0	4.0	4.0	4.0	4.0	3.5
50																4.0	4.0	4.0	4.0	4.0	4.0	4.0	4.0	4.0	4.0	4.0	4.0	4.0	4.0	4.0	4.0	4.0
51																4.5	4.0	4.0	4.0	4.0	4.0	4.0	4.0	4.0	4.0	4.0	4.0	4.0	4.0	4.0	4.0	4.0
52																4.5	4.5	4.5	4.5	4.5	4.5	4.0	4.0	4.0	4.0	4.0	4.0	4.0	4.0	4.0	4.0	4.0
53																4.5	4.5	4.5	4.5	4.5	4.5	4.5	4.5	4.5	4.5	4.0	4.0	4.0	4.0	4.0	4.0	4.0
54																4.5	4.5	4.5	4.5	4.5	4.5	4.5	4.5	4.5	4.5	4.5	4.5	4.5	4.5	4.5	4.0	4.0
55																4.5	4.5	4.5	4.5	4.5	4.5	4.5	4.5	4.5	4.5	4.5	4.5	4.5	4.5	4.5	4.5	4.5
56																5.0	5.0	5.0	5.0	5.0	5.0	5.0	5.0	5.0	5.0	5.0	5.0	5.0	4.5	4.5	4.5	4.5
57																5.0	5.0	5.0	5.0	5.0	5.0	5.0	5.0	5.0	5.0	5.0	5.0	5.0	5.0	5.0	5.0	5.0
58																5.0	5.0	5.0	5.0	5.0	5.0	5.0	5.0	5.0	5.0	5.0	5.0	5.0	5.0	5.0	5.0	5.0
59																5.5	5.5	5.5	5.0	5.0	5.0	5.0	5.0	5.0	5.0	5.0	5.0	5.0	5.0	5.0	5.0	5.0
60																6.0	5.5	5.5	5.5	5.5	5.5	5.0	5.0	5.0	5.0	5.0	5.0	5.0	5.0	5.0	5.0	5.0
61																6.0	5.5	5.5	5.5	5.5	5.5	5.5	5.5	5.5	5.5	5.5	5.5	5.5	5.5	5.5	5.5	5.5
62																6.0	6.0	5.5	5.5	5.5	5.5	5.5	5.5	5.5	5.5	5.5	5.5	5.5	5.5	5.5	5.5	5.5

Not Analyzed

Note: If stainless steel reconstituted rods are present in the fuel assembly, add an additional year of cooling time.

Note: Page P.2-34 provides the explanatory notes and limitations regarding the use of this Table.

Table P.2-12
PWR Fuel Qualification Table for Zone 3 Fuel with 1.5 kW per Assembly for the NUHOMS®-24PTH DSC (Fuel w/ CCs)

(Minimum required years of cooling time after reactor core discharge)

Burn-Up, GWD/MT	Assembly Average Initial U-235 Enrichment, wt %																														
	1.5	2.0	2.1	2.2	2.3	2.4	2.5	2.6	2.7	2.8	2.9	3.0	3.1	3.2	3.3	3.4	3.5	3.6	3.7	3.8	3.9	4.0	4.1	4.2	4.3	4.4	4.5	4.6	4.7	4.8	4.9	5.0
10	3.0	3.0	3.0	3.0	3.0	3.0	3.0	3.0	3.0	3.0	3.0	3.0	3.0	3.0	3.0	3.0	3.0	3.0	3.0	3.0	3.0	3.0	3.0	3.0	3.0	3.0	3.0	3.0	3.0	3.0	3.0	3.0
15	3.0	3.0	3.0	3.0	3.0	3.0	3.0	3.0	3.0	3.0	3.0	3.0	3.0	3.0	3.0	3.0	3.0	3.0	3.0	3.0	3.0	3.0	3.0	3.0	3.0	3.0	3.0	3.0	3.0	3.0	3.0	3.0
20	3.0	3.0	3.0	3.0	3.0	3.0	3.0	3.0	3.0	3.0	3.0	3.0	3.0	3.0	3.0	3.0	3.0	3.0	3.0	3.0	3.0	3.0	3.0	3.0	3.0	3.0	3.0	3.0	3.0	3.0	3.0	3.0
25			3.0	3.0	3.0	3.0	3.0	3.0	3.0	3.0	3.0	3.0	3.0	3.0	3.0	3.0	3.0	3.0	3.0	3.0	3.0	3.0	3.0	3.0	3.0	3.0	3.0	3.0	3.0	3.0	3.0	3.0
28				3.0	3.0	3.0	3.0	3.0	3.0	3.0	3.0	3.0	3.0	3.0	3.0	3.0	3.0	3.0	3.0	3.0	3.0	3.0	3.0	3.0	3.0	3.0	3.0	3.0	3.0	3.0	3.0	3.0
30							3.0	3.0	3.0	3.0	3.0	3.0	3.0	3.0	3.0	3.0	3.0	3.0	3.0	3.0	3.0	3.0	3.0	3.0	3.0	3.0	3.0	3.0	3.0	3.0	3.0	3.0
32								3.5	3.0	3.0	3.0	3.0	3.0	3.0	3.0	3.0	3.0	3.0	3.0	3.0	3.0	3.0	3.0	3.0	3.0	3.0	3.0	3.0	3.0	3.0	3.0	3.0
34									3.5	3.5	3.5	3.5	3.5	3.5	3.5	3.5	3.5	3.5	3.5	3.5	3.5	3.0	3.0	3.0	3.0	3.0	3.0	3.0	3.0	3.0	3.0	3.0
36										3.5	3.5	3.5	3.5	3.5	3.5	3.5	3.5	3.5	3.5	3.5	3.5	3.5	3.5	3.5	3.5	3.5	3.5	3.5	3.5	3.5	3.5	3.5
38												4.0	4.0	4.0	4.0	4.0	4.0	3.5	3.5	3.5	3.5	3.5	3.5	3.5	3.5	3.5	3.5	3.5	3.5	3.5	3.5	3.5
39												4.0	4.0	4.0	4.0	4.0	4.0	4.0	4.0	4.0	4.0	4.0	4.0	4.0	4.0	3.5	3.5	3.5	3.5	3.5	3.5	3.5
40												4.0	4.0	4.0	4.0	4.0	4.0	4.0	4.0	4.0	4.0	4.0	4.0	4.0	4.0	4.0	4.0	4.0	4.0	4.0	4.0	4.0
41												4.0	4.0	4.0	4.0	4.0	4.0	4.0	4.0	4.0	4.0	4.0	4.0	4.0	4.0	4.0	4.0	4.0	4.0	4.0	4.0	4.0
42												4.5	4.5	4.5	4.5	4.5	4.5	4.0	4.0	4.0	4.0	4.0	4.0	4.0	4.0	4.0	4.0	4.0	4.0	4.0	4.0	4.0
43												4.5	4.5	4.5	4.5	4.5	4.5	4.5	4.5	4.5	4.5	4.5	4.5	4.0	4.0	4.0	4.0	4.0	4.0	4.0	4.0	4.0
44												4.5	4.5	4.5	4.5	4.5	4.5	4.5	4.5	4.5	4.5	4.5	4.5	4.5	4.5	4.5	4.5	4.5	4.5	4.5	4.5	4.0
45														5.0	4.5	4.5	4.5	4.5	4.5	4.5	4.5	4.5	4.5	4.5	4.5	4.5	4.5	4.5	4.5	4.5	4.5	4.5
46														5.0	5.0	5.0	5.0	5.0	5.0	4.5	4.5	4.5	4.5	4.5	4.5	4.5	4.5	4.5	4.5	4.5	4.5	4.5
47														5.0	5.0	5.0	5.0	5.0	5.0	5.0	5.0	5.0	5.0	5.0	5.0	4.5	4.5	4.5	4.5	4.5	4.5	4.5
48														5.5	5.0	5.0	5.0	5.0	5.0	5.0	5.0	5.0	5.0	5.0	5.0	5.0	5.0	5.0	5.0	5.0	5.0	5.0
49														5.5	5.5	5.5	5.5	5.5	5.0	5.0	5.0	5.0	5.0	5.0	5.0	5.0	5.0	5.0	5.0	5.0	5.0	5.0
50																5.5	5.5	5.5	5.5	5.5	5.5	5.5	5.5	5.0	5.0	5.0	5.0	5.0	5.0	5.0	5.0	5.0
51																5.5	5.5	5.5	5.5	5.5	5.5	5.5	5.5	5.5	5.5	5.5	5.5	5.5	5.5	5.0	5.0	5.0
52																6.0	6.0	6.0	6.0	5.5	5.5	5.5	5.5	5.5	5.5	5.5	5.5	5.5	5.5	5.5	5.5	5.5
53																6.0	6.0	6.0	6.0	6.0	6.0	6.0	6.0	6.0	6.0	6.0	5.5	5.5	5.5	5.5	5.5	5.5
54																6.5	6.5	6.5	6.0	6.0	6.0	6.0	6.0	6.0	6.0	6.0	6.0	6.0	6.0	6.0	6.0	5.5
55																6.5	6.5	6.5	6.5	6.5	6.5	6.5	6.5	6.0	6.0	6.0	6.0	6.0	6.0	6.0	6.0	6.0
56																7.0	7.0	6.5	6.5	6.5	6.5	6.5	6.5	6.5	6.5	6.5	6.5	6.5	6.0	6.0	6.0	6.0
57																7.0	7.0	7.0	7.0	7.0	7.0	7.0	6.5	6.5	6.5	6.5	6.5	6.5	6.5	6.5	6.5	6.5
58																7.5	7.5	7.5	7.0	7.0	7.0	7.0	7.0	7.0	7.0	7.0	7.0	6.5	6.5	6.5	6.5	6.5
59																7.5	7.5	7.5	7.5	7.5	7.5	7.5	7.5	7.0	7.0	7.0	7.0	7.0	7.0	7.0	7.0	7.0
60																8.0	8.0	8.0	8.0	8.0	7.5	7.5	7.5	7.5	7.5	7.5	7.5	7.0	7.0	7.0	7.0	7.0
61																8.5	8.5	8.5	8.0	8.0	8.0	8.0	8.0	8.0	7.5	7.5	7.5	7.5	7.5	7.5	7.5	7.5
62																9.0	8.5	8.5	8.5	8.5	8.5	8.5	8.0	8.0	8.0	8.0	8.0	8.0	8.0	7.5	7.5	7.5

Not Analyzed

Note: If stainless steel reconstituted rods are present in the fuel assembly, add an additional year of cooling time.

Note: Page P.2-34 provides the explanatory notes and limitations regarding the use of this Table.

Table P.2-13
PWR Fuel Qualification Table for Zone 4 Fuel with 1.3 kW per Assembly for the NUHOMS®-24PTH DSC (Fuel w/ CCs)

(Minimum required years of cooling time after reactor core discharge)

Burn-Up, GWD/MT	Assembly Average Initial U-235 Enrichment, wt %																														
	1.5	2.0	2.1	2.2	2.3	2.4	2.5	2.6	2.7	2.8	2.9	3.0	3.1	3.2	3.3	3.4	3.5	3.6	3.7	3.8	3.9	4.0	4.1	4.2	4.3	4.4	4.5	4.6	4.7	4.8	4.9	5.0
10	3.0	3.0	3.0	3.0	3.0	3.0	3.0	3.0	3.0	3.0	3.0	3.0	3.0	3.0	3.0	3.0	3.0	3.0	3.0	3.0	3.0	3.0	3.0	3.0	3.0	3.0	3.0	3.0	3.0	3.0	3.0	3.0
15	3.0	3.0	3.0	3.0	3.0	3.0	3.0	3.0	3.0	3.0	3.0	3.0	3.0	3.0	3.0	3.0	3.0	3.0	3.0	3.0	3.0	3.0	3.0	3.0	3.0	3.0	3.0	3.0	3.0	3.0	3.0	3.0
20	3.0	3.0	3.0	3.0	3.0	3.0	3.0	3.0	3.0	3.0	3.0	3.0	3.0	3.0	3.0	3.0	3.0	3.0	3.0	3.0	3.0	3.0	3.0	3.0	3.0	3.0	3.0	3.0	3.0	3.0	3.0	3.0
25			3.0	3.0	3.0	3.0	3.0	3.0	3.0	3.0	3.0	3.0	3.0	3.0	3.0	3.0	3.0	3.0	3.0	3.0	3.0	3.0	3.0	3.0	3.0	3.0	3.0	3.0	3.0	3.0	3.0	3.0
28				3.0	3.0	3.0	3.0	3.0	3.0	3.0	3.0	3.0	3.0	3.0	3.0	3.0	3.0	3.0	3.0	3.0	3.0	3.0	3.0	3.0	3.0	3.0	3.0	3.0	3.0	3.0	3.0	3.0
30							3.5	3.5	3.5	3.5	3.5	3.5	3.5	3.5	3.5	3.5	3.5	3.0	3.0	3.0	3.0	3.0	3.0	3.0	3.0	3.0	3.0	3.0	3.0	3.0	3.0	3.0
32								3.5	3.5	3.5	3.5	3.5	3.5	3.5	3.5	3.5	3.5	3.5	3.5	3.5	3.5	3.5	3.5	3.5	3.5	3.5	3.5	3.5	3.5	3.5	3.5	3.5
34									4.0	4.0	4.0	4.0	4.0	4.0	4.0	4.0	3.5	3.5	3.5	3.5	3.5	3.5	3.5	3.5	3.5	3.5	3.5	3.5	3.5	3.5	3.5	3.5
36										4.0	4.0	4.0	4.0	4.0	4.0	4.0	4.0	4.0	4.0	4.0	4.0	4.0	4.0	4.0	4.0	4.0	4.0	4.0	4.0	4.0	4.0	4.0
38												4.5	4.5	4.5	4.5	4.5	4.5	4.5	4.0	4.0	4.0	4.0	4.0	4.0	4.0	4.0	4.0	4.0	4.0	4.0	4.0	4.0
39												4.5	4.5	4.5	4.5	4.5	4.5	4.5	4.5	4.5	4.5	4.5	4.5	4.5	4.5	4.0	4.0	4.0	4.0	4.0	4.0	4.0
40												4.5	4.5	4.5	4.5	4.5	4.5	4.5	4.5	4.5	4.5	4.5	4.5	4.5	4.5	4.5	4.5	4.5	4.5	4.5	4.5	4.5
41												5.0	5.0	5.0	5.0	4.5	4.5	4.5	4.5	4.5	4.5	4.5	4.5	4.5	4.5	4.5	4.5	4.5	4.5	4.5	4.5	4.5
42												5.0	5.0	5.0	5.0	5.0	5.0	5.0	5.0	5.0	5.0	5.0	4.5	4.5	4.5	4.5	4.5	4.5	4.5	4.5	4.5	4.5
43												5.0	5.0	5.0	5.0	5.0	5.0	5.0	5.0	5.0	5.0	5.0	5.0	5.0	5.0	5.0	5.0	5.0	5.0	5.0	4.5	4.5
44												5.5	5.5	5.5	5.5	5.5	5.5	5.0	5.0	5.0	5.0	5.0	5.0	5.0	5.0	5.0	5.0	5.0	5.0	5.0	5.0	5.0
45														5.5	5.5	5.5	5.5	5.5	5.5	5.5	5.5	5.5	5.0	5.0	5.0	5.0	5.0	5.0	5.0	5.0	5.0	5.0
46														5.5	5.5	5.5	5.5	5.5	5.5	5.5	5.5	5.5	5.5	5.5	5.5	5.5	5.5	5.5	5.5	5.0	5.0	5.0
47														6.0	6.0	6.0	6.0	6.0	6.0	5.5	5.5	5.5	5.5	5.5	5.5	5.5	5.5	5.5	5.5	5.5	5.5	5.5
48														6.0	6.0	6.0	6.0	6.0	6.0	6.0	6.0	6.0	6.0	6.0	5.5	5.5	5.5	5.5	5.5	5.5	5.5	5.5
49														6.5	6.5	6.5	6.5	6.5	6.0	6.0	6.0	6.0	6.0	6.0	6.0	6.0	6.0	6.0	6.0	6.0	6.0	6.0
50																6.5	6.5	6.5	6.5	6.5	6.5	6.5	6.5	6.0	6.0	6.0	6.0	6.0	6.0	6.0	6.0	6.0
51																7.0	7.0	7.0	6.5	6.5	6.5	6.5	6.5	6.5	6.5	6.5	6.5	6.5	6.5	6.5	6.0	6.0
52																7.0	7.0	7.0	7.0	7.0	7.0	7.0	7.0	6.5	6.5	6.5	6.5	6.5	6.5	6.5	6.5	6.5
53																7.5	7.5	7.5	7.5	7.5	7.0	7.0	7.0	7.0	7.0	7.0	7.0	7.0	7.0	7.0	6.5	6.5
54																8.0	8.0	7.5	7.5	7.5	7.5	7.5	7.5	7.5	7.5	7.0	7.0	7.0	7.0	7.0	7.0	7.0
55																8.0	8.0	8.0	8.0	8.0	8.0	8.0	7.5	7.5	7.5	7.5	7.5	7.5	7.5	7.5	7.5	7.0
56																8.5	8.5	8.5	8.5	8.5	8.0	8.0	8.0	8.0	8.0	8.0	8.0	7.5	7.5	7.5	7.5	7.5
57																9.0	9.0	9.0	8.5	8.5	8.5	8.5	8.5	8.5	8.5	8.0	8.0	8.0	8.0	8.0	8.0	8.0
58																9.5	9.5	9.5	9.5	9.0	9.0	9.0	9.0	9.0	8.5	8.5	8.5	8.5	8.5	8.5	8.5	8.0
59																10.0	10.0	10.0	10.0	9.5	9.5	9.5	9.5	9.5	9.0	9.0	9.0	9.0	9.0	8.5	8.5	8.5
60																10.5	10.5	10.5	10.5	10.0	10.0	10.0	10.0	10.0	9.5	9.5	9.5	9.5	9.5	9.5	9.0	9.0
61																11.0	11.0	11.0	11.0	10.5	10.5	10.5	10.5	10.5	10.0	10.0	10.0	10.0	10.0	9.5	9.5	9.5
62																12.0	11.5	11.5	11.5	11.5	11.0	11.0	11.0	11.0	10.5	10.5	10.5	10.5	10.5	10.0	10.0	10.0

Not Analyzed

Note: If stainless steel reconstituted rods are present in the fuel assembly, add an additional year of cooling time for cooling times less than 10 years.

Note: Page P.2-34 provides the explanatory notes and limitations regarding the use of this Table.

Notes: Tables P.2-6 through P.2-13:

- Burnup = Assembly Average burnup.
- Use burnup and enrichment to lookup minimum cooling time in years. Licensee is responsible for ensuring that uncertainties in fuel enrichment and burnup are correctly accounted for during fuel qualification.
- Round burnup UP to next higher entry, round enrichments DOWN to next lower entry.
- Fuel with an assembly average initial enrichment less than 1.5 (or less than the minimum provided above for each burnup) and greater than 5.0 wt.% U-235 is unacceptable for storage.
- Fuel with a burnup greater than 62 GWd/MTU is unacceptable for storage.
- Fuel with a burnup less than 10 GWd/MTU is acceptable for storage after 3-years cooling.
- See Figure P.2-1 through Figure P.2-5 for a description of the zones.
- For fuel assemblies reconstituted with uranium oxide rods, use the assembly average equivalent enrichment to determine the minimum cooling time.
- The cooling times for damaged and intact assemblies are identical.
- *Example*: An intact fuel assembly without CCs, with a decay heat load of 1.7 kW or less, an initial enrichment of 3.65 wt. % U-235 and a burnup of 41.5 GWd/MTU is acceptable for storage after a 4.0 year cooling time as defined by 3.6 wt. % U-235 (rounding down) and 42 GWd/MTU (rounding up) in Table P.2-6.

Table P.2-14
Summary of 24PTH-DSC Load Combinations

Load Case	Horizontal DW		Vertical DW		Internal Pressure	External Pressure	Thermal Condition	Lifting Loads	Other Loads	Service Level
	DSC	Fuel	DSC	Fuel						
Non-Operational Load Cases										
NO-1 Fab. Leak Testing	--	--	--	--	--	14.7 psi	70°F	--	155 kip axial	Test
NO-2 Fab. Leak Testing	--	--	--	--	18 psi				155 kip axial	Test
NO-3 DSC Uprighting	x	--	--	--	--	--	70°F	x	--	A
NO-4 DSC Vertical Lift	--	--	x	--	--	--	70°F	x	--	A
Fuel Loading Load Cases										
FL-1 DSC/Cask Filling	--	--	Cask	--	--	Hydrostatic	100°F Cask	x	x	A
FL-2 DSC/Cask Filling	--	--	Cask	--	Hydrostatic	Hydrostatic	100°F Cask	x	x	A
FL-3 DSC/Cask Xfer	--	--	Cask	--	Hydrostatic	Hydrostatic	100°F Cask	--	--	A
FL-4 Fuel Loading	--	--	Cask	x	Hydrostatic	Hydrostatic	100°F Cask	--	--	A
FL-5 Xfer to Decon	--	--	Cask	x	Hydrostatic	Hydrostatic	100°F Cask	--	--	A
FL-6 Inner Cover plate Welding	--	--	Cask	x	Hydrostatic	Hydrostatic	100°F Cask	--	--	A
FL-7 Fuel Deck Seismic Loading	--	--	Cask	x	Hydrostatic	Hydrostatic	100°F Cask	--	Note 10	D
Draining/Drying Load Cases										
DD-1 DSC Blowdown	--	--	Cask	x	Hydrostatic+ 20 psi	Hydrostatic	100°F Cask	--	--	B
DD-2 Vacuum Drying	--	--	Cask	x	0 psia	Hydrostatic+ 14.7psi	100°F Cask	--	--	B
DD-3 Helium Backfill	--	--	Cask	x	18 psi	Hydrostatic	100°F Cask	--	--	B
DD-4 Final Helium Backfill	--	--	Cask	x	3.5 psi	Hydrostatic	100°F Cask	--	--	B
DD-5 Outer Cover Plate Weld	--	--	Cask	x	3.5 psi	Hydrostatic	100°F Cask	--	--	B
Transfer Trailer Loading										
TL-1 Vertical Xfer to Trailer	--	--	Cask	x	15 psi	--	0°F Cask	--	--	A
TL-2 Vertical Xfer to Trailer	--	--	Cask	x	15 psi	--	100°F Cask	--	--	A
TL-3 Laydown	Cask	X	--	--	15 psi	--	0°F Cask	--	--	A
TL-4 Laydown	Cask	X	--	--	15 psi	--	100°F Cask	--	--	A

Table P.2-14
Summary of 24PTH-DSC Load Combinations (Continued)

Load Case	Horizontal DW		Vertical DW		Internal Pressure	External Pressure	Thermal Condition	Handling Loads	Other Loads	Service Level
	DSC	Fuel	DSC	Fuel						
Transfer To/From ISFSI										
TR-1 Axial Load - Cold	Cask	X	--	--	15.0 psi	--	0°F Cask	1g Axial	--	A
TR-2 Transverse Load - Cold	Cask	X	--	--	15.0 psi	--	0°F Cask	1g Transverse	--	A
TR-3 Vertical Load - Cold	Cask	X	--	--	15.0 psi	--	0°F Cask	1g Vertical	--	A
TR-4 Oblique Load - Cold	Cask	X	--	--	15.0 psi	--	0°F Cask	½ g Axial + ½ g Trans + ½ g Vert.	--	A
TR-5 Axial Load - Hot	Cask	X	--	--	15.0 psi	--	100°F Cask	1g Axial	--	A
TR-6 Transverse Load - Hot	Cask	X	--	--	15.0 psi	--	100°F Cask	1g Trans.	--	A
TR-7 Vertical Load - Hot	Cask	X	--	--	15.0 psi	--	100°F Cask	1g Vertical	--	A
TR-8 Oblique Load - Hot	Cask	X	--	--	15.0 psi	--	100°F Cask	½ g Axial + ½ g Trans + ½ g Vert.	--	A
TR-9 25g Corner Drop	Note 1	Note 1	Note 1	Note 1	20 psi	--	100°F(2) Cask		25g Corner Drop	D
TR-10 75g Side Drop	Note 1	Note 1	--	--	20 psi	--	100°F(2) Cask		75g Side Drop	D
TR-11 Top or Bottom End Drops	Note 12									
TR-12 – Transfer Cask Post Drop Accident - Loss of Neutron Shield, Loss of Sunshade, Loss of Cooling Air	Cask	X	--	--	120 psi(7) (-S & -L) 90 psi(7)(8) (-S-LC)	--	100°F(2) Cask	--	--	D
HSM LOADING LD-1 Normal Loading - Cold	Cask	X	--	--	15.0 psi	--	0°F Cask	+80 Kip	--	A
LD-2 Normal Loading – Hot	Cask	X	--	--	15.0 psi	--	100° F Cask	+80 Kip	--	A
LD-3 Normal Loading – Hot	Cask	X	--	--	15.0 psi	--	117° F w/shade(5)	+80 Kip	--	A
LD-4 Off-Normal Loading – Cold	Cask	X	--	--	20.0 psi	--	0° F Cask	+80 Kip	--	B
LD-5 Off-Normal Loading - Hot	Cask	X	--	--	20.0 psi	--	100° F Cask	+80 Kip	--	B
LD-6 Off-Normal Loading - Hot	Cask	X	--	--	20.0 psi	--	117° F w/shade(5)	+80 Kip	--	B
LD-7 Accident Loading	Cask	X	--	--	20.0 psi	--	117° F w/shade(5)	+80 Kip	--	C/D

Table P.2-14
Summary of 24PTH-DSC Load Combinations
(continued)

Load Case	Horizontal DW		Vertical DW		Internal Pressure	External Pressure	Thermal Condition	Handling Loads	Other Loads	Service Level
	DSC	Fuel	DSC	Fuel						
HSM STORAGE										
HSM-1 Off-Normal	HSM	X	--	--	15.0 psi	--	-40° F HSM	--	--	B
HSM-2 Normal Storage	HSM	X	--	--	15.0 psi	--	0° F HSM	--	--	A
HSM-3 Off-Normal	HSM	X	--	--	15.0 psi	--	117° F HSM	--	--	B
HSM-4 Off-Normal Temp. + 10 % Failed Fuel Rods	HSM	X	--	--	20.0 psi	--	117° F HSM	--		C
HSM-5 Blocked Vent Storage	HSM	X	--	--	120.0 psi (--S&-L)/90 psi (-S-LC)	--	117° F HSM/BV[4]	--	--	D
HSM-6 B.V. + 10 % Failed Fuel Rods	HSM	X	--	--	120.0 psi (--S&-L)/90 psi (-S-LC)	--	117° F HSM/BV[4]	--		D
HSM-7 Earthquake Loading – Cold	HSM	X	--	--	15.0 psi	--	0° F HSM	--	EQ	C
HSM-8 Earthquake Loading – Hot	HSM	X	--	--	15.0 psi	--	100°F HSM	--	EQ	C
HSM-9 Flood Load (50' H_2O) – Cold	HSM	X	--	--	0 psi	22 psi	0° F HSM	--	Flood[3]	C
HSM-10 Flood Load (50' H_2O) – Hot	HSM	X	--	--	0 psi	22 psi	100°F HSM	--	Flood[3]	C

HSM Unloading	Horizontal DW		Vertical DW		Internal Pressure	External Pressure	Thermal Condition	Handling Loads	Other Loads	Service Level
	DSC	Fuel	DSC	Fuel						
UL-1 Normal Unloading – Cold	HSM	X	--	--	15.0 psi	--	0°F HSM	-60 Kip	--	A
UL-2 Normal Unloading – Hot	HSM	X	--	--	15.0 psi	--	100° F HSM	-60 Kip	--	A
UL-3 Normal Unloading – Hot	HSM	X	--	--	15.0 psi	--	117° F HSM	-60 Kip	--	A
UL-4 Off-Normal Unloading – Cold	HSM	X	--	--	20.0 psi	--	0° F HSM	-60 Kip	--	B
UL-5 Off-Normal Unloading – Hot	HSM	X	--	--	20.0 psi	--	100° F HSM	-60 Kip	--	B
UL-6 Off-Normal Unloading – Hot[6, 11]	HSM	X	--	--	20.0 psi	--	117° F HSM	-60 Kip	--	B
UL-7 Off-Normal Unloading – Hot[7, 11]	HSM	X	--	--	20.0 psi	--	100° F HSM	-80 Kip	--	C
UL-8 Accident Unloading – Hot	HSM	X	--	--	120 psi[7] (-S & -L) 90 psi[7][8] (-S-LC)	--	100° F HSM	-80 Kip	--	D

HSM Unloading / Reflood	Horizontal DW		Vertical DW		Internal Pressure[13]	External Pressure	Thermal Condition	Handling Loads	Other Loads	Service Level
	DSC	Fuel	DSC	Fuel						
RF-1 24PTH-DSC Reflood	--	--	Cask	X	120.0 psi (max)	Hydrostatic	100° F Cask	--	--	D

Table P.2-14
Summary of 24PTH-DSC Load Combinations

Summary of 24PTH-DSC Load Combinations Notes:

1. Drop acceleration includes gravity effects. Therefore, it is not necessary to add an additional 1.0g load.
2. For Level D events, stress allowables are based considering the maximum temperature of the component (Thermal stresses are not limited for level D events and maximum temperatures give minimum allowables) or the actual temperature distribution (basket).
3 Flood load is an external pressure equivalent to 50 feet (164m) of water.
4. BV = HSM Vents are blocked. The BV accident pressure, based on the blocked vent temperature condition and 10% failed rods, is bounded by the transfer case post drop accident pressure.
5. At temperature over 100° F (38°C) a sunshade is required over the Transfer Cask.
6. As described in Section P.4, this pressure assumes 10% release of the fuel cover gas and 30% of the fission gas. Since unloading requires the HSM door to be removed, the pressure and temperatures are based on the normal (unblocked vent) condition.
7. As described in Section P.4, this pressure assumes 100% release of the fuel cover gas and 30% of the fission gas. Although unloading requires the HSM door to be removed, the pressure and temperatures are based on the accident transfer condition.
8. 90 psi is the bounding pressure for the 24PTH-S-LC based on the calculated accident condition temperature (with the maximum allowed heat load of 24 kW).
9. Not used.
10. Fuel deck seismic loads are assumed enveloped by handling loads.
11. Load Cases UL-7 and UL-8 envelop loading cases where the insertion loading of 80 kips (356KN) is considered with an accident pressure (the insertion force is opposed by internal pressure).
12. The top end drop and bottom end drop are not credible events, therefore these drop analyses are not required. However, 60g end drops (for P71 conditions) and the 75g side drop are considered to conservatively envelop the effects of a 25g corner drop.
13. Reflood pressure is limited to 20psi. For analysis purposes a 120 psi pressure is considered.

Table P.2-15
Summary of Stress Criteria for Subsection NB Pressure Boundary Components

(e.g., DSC Shell and Cover Plates)

Service Level	Stress Category
Level A[1][2]	$P_m \le 1.0S_m$ $P_L \le 1.5S_m$ $P_m\ (or\ P_L) + P_b \le 1.5S_m$ $P_m\ (or\ P_L) + P_b + Q \le 3.0S_m$
Level B[1][3]	$P_m \le 1.0S_m$ $P_L \le 1.5S_m$ $P_m\ (or\ P_L) + P_b \le 1.5S_m$ $P_m\ (or\ P_L) + P_b + Q \le 3.0S_m$
Level C[4]	$P_m \le \max(1.2S_m, 1.0S_y)$ $P_L \le \max(1.8S_m, 1.5S_y)$ $P_m\ (or\ P_L) + P_b \le \max(1.8S_m, 1.5S_y)$ $P_m\ (or\ P_L) + P_b + Q \le note\ 4$
Carbon Steel Components (e.g., Shield Plugs)	
Level D[4] Elastic Analysis	$P_m \le 0.7S_u$ $P_m\ (or\ P_L) + P_b \le 1.0S_u$
Level D[4] Plastic Analysis	$P_m \le 0.7S_u$ $P_m\ (or\ P_L) + P_b \le 0.9S_u$
Austenitic Steel Components (e.g., Shell)	
Level D[4] Elastic Analysis	$P_m \le \min(2.4S_m, 0.7S_u)$ $P_m\ (or\ P_L) + P_b \le \min(3.6S_m, 1.0S_u)$
Level D[4] Plastic Analysis	$P_m \le \max(0.7S_u, S_y + (S_u - S_y)/3)$ $P_m\ (or\ P_L) + P_b \le 0.9S_u$

Notes:

1. The secondary stress limit may be exceeded provided the criteria of NB-3228.5 are satisfied.
2. There are no specific limits on primary stresses for Level A events. However, the stresses due to primary loads during normal service must be computed and combined with the effects of other loadings in satisfying other limits. See NB-3222.1.
3. The 10% increase in allowables from NB-3223(a) may be applicable for load combinations for which the pressure exceeds the design pressure.
4. Evaluation of secondary stresses not required for Level C and D events.

Table P.2-16
Summary of Stress Criteria for Subsection NG Components

(e.g., Fuel Compartment Tubes, Transition Rails)

Service Level	Stress Category (5)
Level A/B[1]	$P_m \le 1.0S_m$ $P_m + P_b \le 1.5S_m$ $P_m + P_b + Q \le 3.0S_m$ (*note* 4)
Level C[2][3] Elastic Analysis	$P_m \le 1.5S_m$ $P_m + P_b \le 2.25S_m$
Level D[2][6] Elastic Analysis	$P_m \le \min(2.4S_m, 0.7S_u)$ $P_m + P_b \le \min(3.6S_m, 1.0S_u)$
Level D[2][6] Plastic Analysis	$P_m \le \max(0.7S_u, S_y + 1/3(S_u - S_y))$ $P_m + P_b \le 0.9S_u$

Notes:

1. There are no pressure loads on the basket, therefore the 10% increase permitted by NG-3223(a) for pressures exceeding the design pressure does not apply.
2. Evaluation of secondary stresses not required for Level C and D events.
3. Criteria listed are for elastic analyses, other analysis methods permitted by NG-3224.1 are acceptable if performed in accordance with the appropriate paragraph of NG-3224.1.
4. This limit may be exceeded provided the requirements of NG-3228.3 are satisfied, see NG-3222.2 and NG-3228.3.
5. As appropriate, the special stress limits of NG-3227 are applicable.
6. Level D criteria are taken from ASME Code, Section III, Appendix F. Acceptable criteria for stability are from Section III of the ASME Code Appendix F.

Table P.2-17
Classification of NUHOMS®-24PTH DSC Components

IMPORTANT TO SAFETY	NOT IMPORTANT TO SAFETY
Canister Assembly	Siphon tube
	Quick connect coupling
Canister shell	Male connector
Bottom shield plug	Canister lifting lug
Inner bottom cover	Electroless nickel coating
Outer bottom cover	
Grapple ring and support	
Top shield plug	ISFSI Basemat and Approach slabs
Inner top cover plate	
Outer top cover plate	
Siphon/vent port cover plate	
Siphon vent block	
Support ring	
Test port plug	
Weld filler metal	
Storage Basket Assembly	
Poison plate	
Basket plate	
Weld stud, washer, hex nut	
Basket rails	
Weld filler metal	
HSM-H Storage Module	
Reinforced Concrete Components	
DSC Support Structure	

Table P.2-18
Summary of NUHOMS®-24PTH DSC and HSM-H Component Design Loadings(1)

Component	Design Load Type	SAR Section Reference	Design Parameters	Applicable Codes
24PTH-DSC:	---	---	---	ASME Code, 1998 Edition with 2000 Addenda, Section III, Subsection NB and Appendix F (Shell) and Subsections NG, NF and Appendix F (Basket) with alternatives noted in Table P.3.1-1.
	Flood	P.2.2.2	Maximum water height: 50 ft and water velocity of 15'/sec.	10CFR72.122(b)
	Seismic	P.2.2.3	Horizontal ground acc: 0.30g Vertical ground acc.: 0.20g	NRC Reg. Guides 1.60 & 1.61 [2.11] and [2.12]
	Dead Load	P.3.6.1.2 P.3.6.1.3	Maximum enveloping weight of loaded 24PTH DSC: 94,000 lbs.	ANSI 57.9-1984
	Normal and Off-Normal Pressure	P.3.6.1.2 P.3.6.1.3	Enveloping internal pressure of ≤15 psig (Normal) and < 20 psig (Off-Normal)	10CFR72.122(h)
	Test Pressure	P.3.6.1.2	Enveloping internal pressure of 18 psig applied w/o DSC outer top cover plate	10CFR72.122(h)
	Normal and Off-Normal Operating Temperature	P.3.6.1.2 P.3.6.1.3 P.3.6.2.2	Normal: Ambient air temperature 0°F to 100° Off Normal: Ambient air temperature -40°F to 117°F	ANSI 57.9-1984
	Normal Handling Loads	P.3.6.1.2 P.3.6.1.3	1. Hydraulic ram load of 80,000 lb.(DSC HSM insertion) 60,000 lb (DSC HSM extraction) 2. Transfer (to/from ISFSI) Loads of: 2a. +/-1.0g axial 2b. +/-1.0g transverse 2c. +/-1.0g vertical 2d. +/-0.5g axial +/-0.5g transverse +/-0.5g vertical	ANSI 57.9-1984
	Off-Normal Handling Loads	P.3.6.1.2	Hydraulic ram load of: 80,000 lb (DSC HSM insertion) 60,000 lb (DSC HSM extraction)	ANSI-57.9-1984
	Accident Handling Loads	P.3.7	Hydraulic ram load of: 80,000 lb (DSC HSM insertion) 80,000 lb (DSC HSM extraction	
	Accidental Cask Drop Loads	P.3.7.5	Equivalent static deceleration of 75g for horizontal side drops, and 25g oblique corner drop	10CFR72.122(b)
	Accident Internal Pressure	P.4	Enveloping internal pressure of ≤120 psig (24PTH-S/-L) and 90 psig (24PTH-S-LC) based on 100% fuel cladding rupture and fill gas release, 30% fission gas release, and ambient air temperature of 117°F	10CFR72.122(h)

Table P.2-18
Summary of NUHOMS®-24PTH DSC and HSM-H Component Design Loadings(1)
(continued)

Component	Design Load Type	SAR Section Reference	Design Parameters	Applicable Codes
HSM-H Module	----	---	----	ACI 349-97, ACI 318-97 (for installation only)
	Flood	P.2.2.5.2.3(C)	Maximum water height: 50 ft. Maximum velocity of water 15'/sec.	10CFR72.122(b)
	Seismic	P.2.2.5.2.3(D)	Horizontal ground acc: 0.30g Vertical ground acc.: 0.20g	NRC Reg. Guides 1.60 & 1.61 [2.11] and [2.12]
	Dead Load	P.2.2.5.2.1(A)	150 pcf concrete structure and weight of support steel structure	ANSI 57.9-1984 [2.9]
	Normal and Off-Normal Operating Temperature	P.2.2.5.2.1(C) P.2.2.5.2.2(A)	Normal: Ambient air temperature 0°F -100°F Off Normal: Ambient air temperature -40°F to 117°F	ANSI 57.9-1984 [2.9]
	Normal Handling Loads	P.2.2.5.2.1(D)	1. Hydraulic ram load of 80,000 lb.(DSC HSM insertion) 60,000 lb (DSC HSM extraction) on the rails	ANSI 57.9-1984 [2.9]
	Off-Normal Handling Loads	P.2.2.5.2.2(B)	Hydraulic ram load of: 80,000 lb (DSC insertion) 80,000 lb (DSC extraction) on both rails	ANSI-57.9-1984 [2.9]
	Design Basis Wind Load	P.2.2.5.2.1(E)	Conservatively assumed to be same as tornado generated wind load.	ASCE 7-95 [2.8]
	Live Load	P.2.2.5.2.1(B)	200 psf (including snow and ice load) on the roof DSC weight (110 kips)	ANSI-57.9-1984 [2.9] ASCE 7-95 [2.8]
	Accident Temperature	P.2.2.5.2.3(A)	Ambient air temperature of –40°F and 117°F with inlet and outlet vents blocked number for condition depending upon heat load	10CFR72.122(n)
	Tornado Wind Load	P.2.2.5.2.3(B)	Maximum wind speed of 360 mph and a pressure drop of 3 psi	ASCE 7-95 [2.8] NRC Regulatory Guide 1.76 [2.6]
	Tornado Missile Load	P.2.2.5.2.3(B)	See Section P.2.2.1.3 for missiles considered.	NUREG-0800 Section 3.5.1.4 [2.7]

Note:
(1) The design criteria for the TC remain unchanged from the FSAR (FSAR Table 3.2-1).

Table P.2-18
Summary of NUHOMS®-24PTH DSC and HSM-H Component Design Loadings[1]
(concluded)

Component	Design Load Type	SAR Section Reference	Design Parameters	Applicable Codes
DSC Steel Support Structure	----	---	----	AISC Specification for Structural Steel Buildings
	Dead Weight	P.2.2.5.2.1(A)	Self weight	ANSI 57.9-1984 [2.9]
	Live Load	P.2.2.5.2.1(B)	DSC weight (110 kips)	ANSI-57.9-1984 [2.9]
	Normal and Off-Normal Operating Temperature	P.2.2.5.2.1(C)	Normal: Ambient air temperature 0°F -100°F Off Normal: Ambient air temperature -40°F to 117°F	ANSI 57.9-1984 [2.9]
	Accident Temperature	P.2.2.5.2.3(A)	Ambient temperature of –40°F and 117°F with inlet and outlet vents blocked number for condition depending upon heat load	10CFR72.122(n)
	Seismic	P.2.2.5.2.3(D)	Horizontal ground acceleration 0.30 g and vertical ground acceleration 0.20 g	NRC Reg. Guides 1.60 & 1.61 [2.11] [2.12]
	Normal Handling Loads	P.2.2.5.2.1(D)	Hydraulic ram load of 80,000 lb.(DSC insertion) 60,000 lb (DSC extraction) on both rails	ANSI 57.9-1984 [2.9]
	Off-Normal Handling Loads	P.2.2.5.2.2(B)	For steel support structure evaluation, this load is 80,000 lbs. applied to each rail, one rail at a time (for both DSC insertion and retrieval)	ANSI-57.9-1984 [2.9]

Table P.2-19
Design Pressures for Tornado Wind Loading

HSM-H Wall Orientation(1)	Velocity Pressure (psf)	Pressure Coefficient(2)	Max/Min Design Pressure (psf)
Front	344	+0.68	234
Left	344	-0.60	-207
Rear	344	-0.43	-148
Right	344	-0.60	-207
Roof	344	-0.60	-207

Notes:
(1) Wind direction assumed to be from front. Wind loads from other directions may be found by rotating table values to desired wind direction.
(2) Pressure coefficient (used) = Gust factor (0.85)* Max/Min pressure coefficient.

Table P.2-20
B10 Specification for the NUHOMS®-24PTH Poison Plates

NUHOMS®-24PTH DSC Basket Type (1)	Minimum B10 Aerial Density, gm/cm^2	
	Natural or Enriched Boron aluminum Alloy / Metal Matric Composite (MMC)	Boral®
1A or 2A	.007	.009
1B or 2B	.015	.019
1C or 2C	.032	.040

Notes:
(1) Basket Type 1 contains aluminum inserts in the R45 transition rails; Type 2 does not contain aluminum inserts.

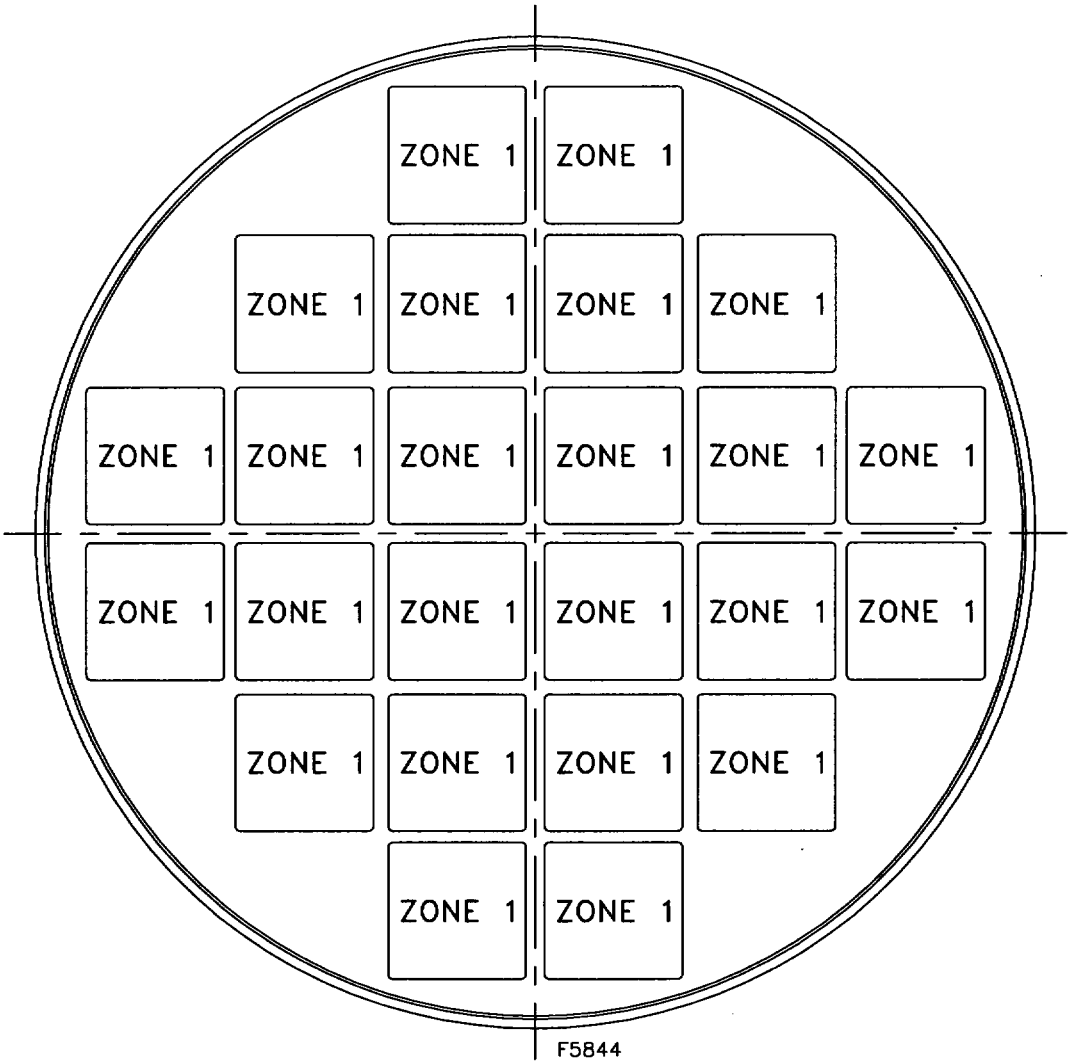

	Zone 1	Zone 2	Zone 3	Zone 4
Maximum Decay Heat (kW/FA)	1.7	NA	NA	NA
Maximum Decay Heat per Zone (kW)	40.8	NA	NA	NA

Figure P.2-1
Heat Load Zoning Configuration No. 1 for 24PTH-S and 24PTH-L DSCs
(with or without Control Components)

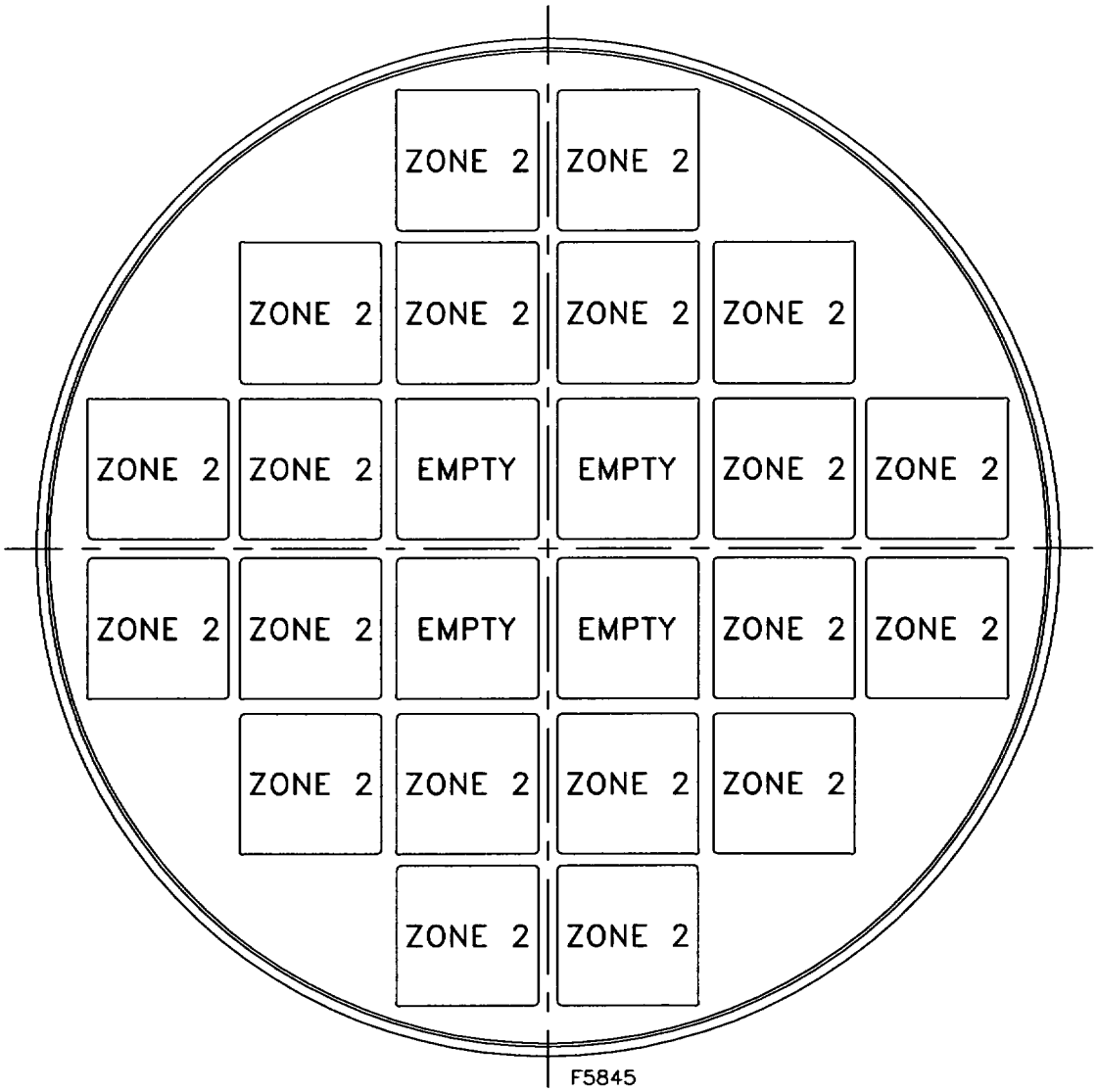

	Zone 1	Zone 2	Zone 3	Zone 4
Maximum Decay Heat (kW/FA)	NA	2.0	NA	NA
Maximum Decay Heat per Zone (kW)	NA	40.0	NA	NA

Figure P.2-2
Heat Load Zoning Configuration No. 2 for 24PTH-S and 24PTH-L DSCs
(with or without Control Components)

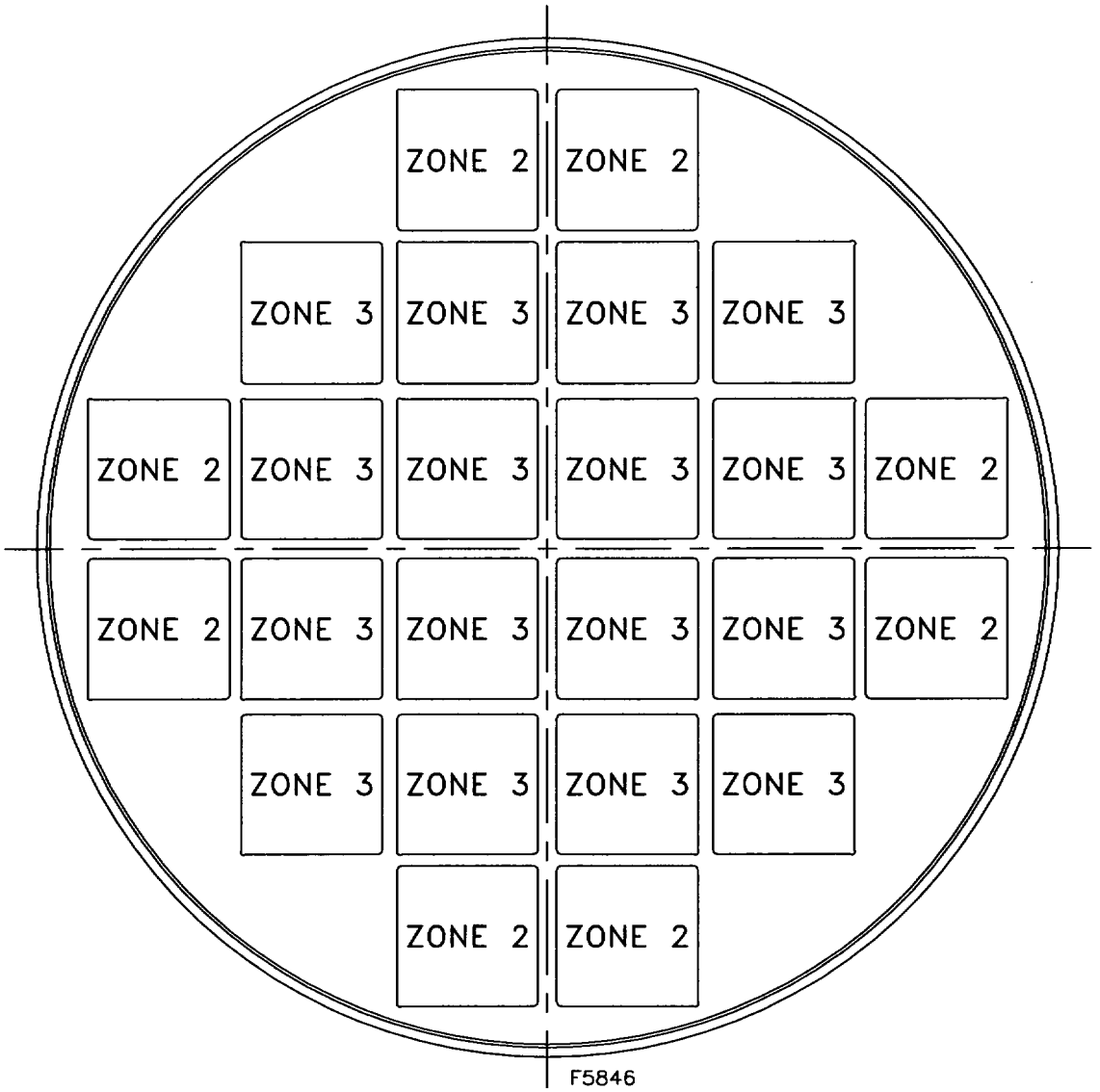

	Zone 1	Zone 2	Zone 3	Zone 4
Maximum Decay Heat (kW/FA)	NA	2.0	1.5	NA
Maximum Decay Heat per Zone (kW)	NA	16	24	NA

Figure P.2-3
Heat Load Zoning Configuration No. 3 for 24PTH-S and 24PTH-L DSCs
(with or without Control Components)

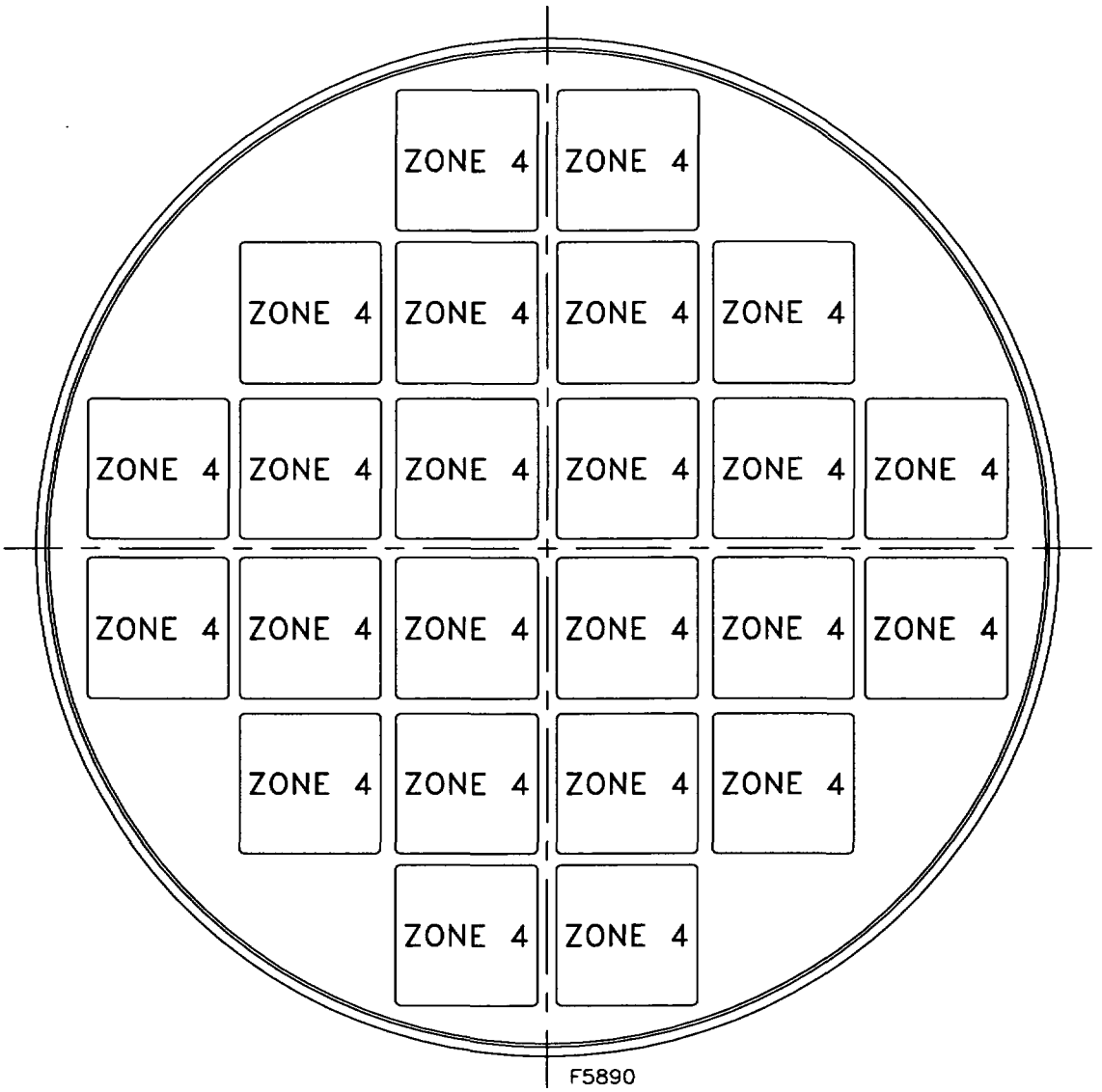

	Zone 1	Zone 2	Zone 3	Zone 4
Maximum Decay Heat (kW/FA)	NA	NA	NA	1.3
Maximum Decay Heat per Zone (kW)	NA	NA	NA	31.2

Figure P.2-4
Heat Load Zoning Configuration No. 4 for 24PTH-S and 24PTH-L DSCs
(with or without Control Components)

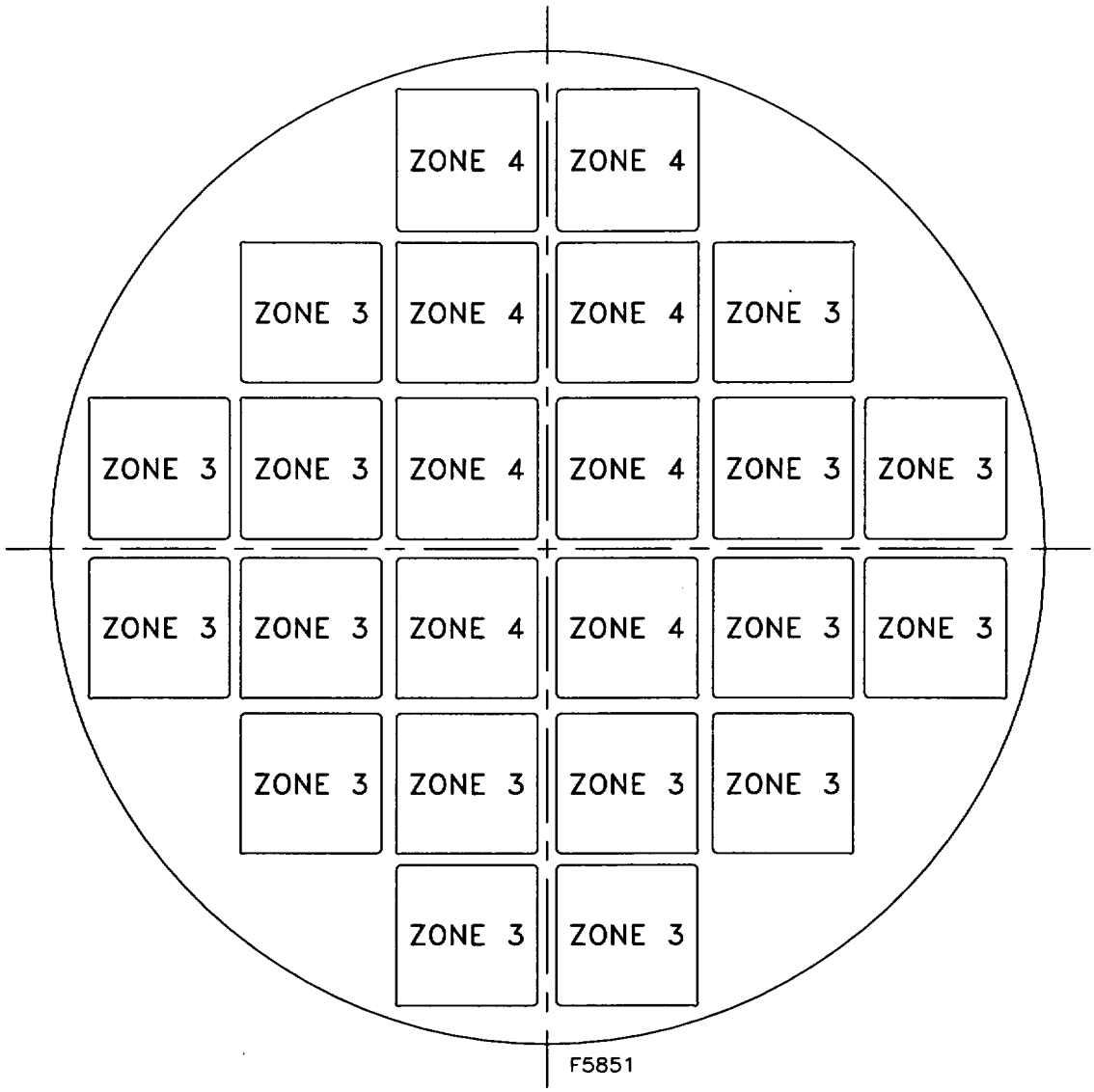

	Zone 1	Zone 2	Zone 3	Zone 4
Maximum Decay Heat (kW/FA)	NA	NA	1.5	1.3
Maximum Decay Heat per Zone (kW)	NA	NA	Note 1	10.4

Notes:
1. Fuel assemblies with a maximum heat load of 1.5 kW are permitted in Zone 3 provided a 24 kW/canister maximum heat load is maintained.
2. This configuration is applicable to Basket Types 2A, 2B, or 2C only (without aluminum inserts).

Figure P.2-5
Heat Load Zoning Configuration No. 5 for 24PTH-S-LC DSC
(with or without Control Components)

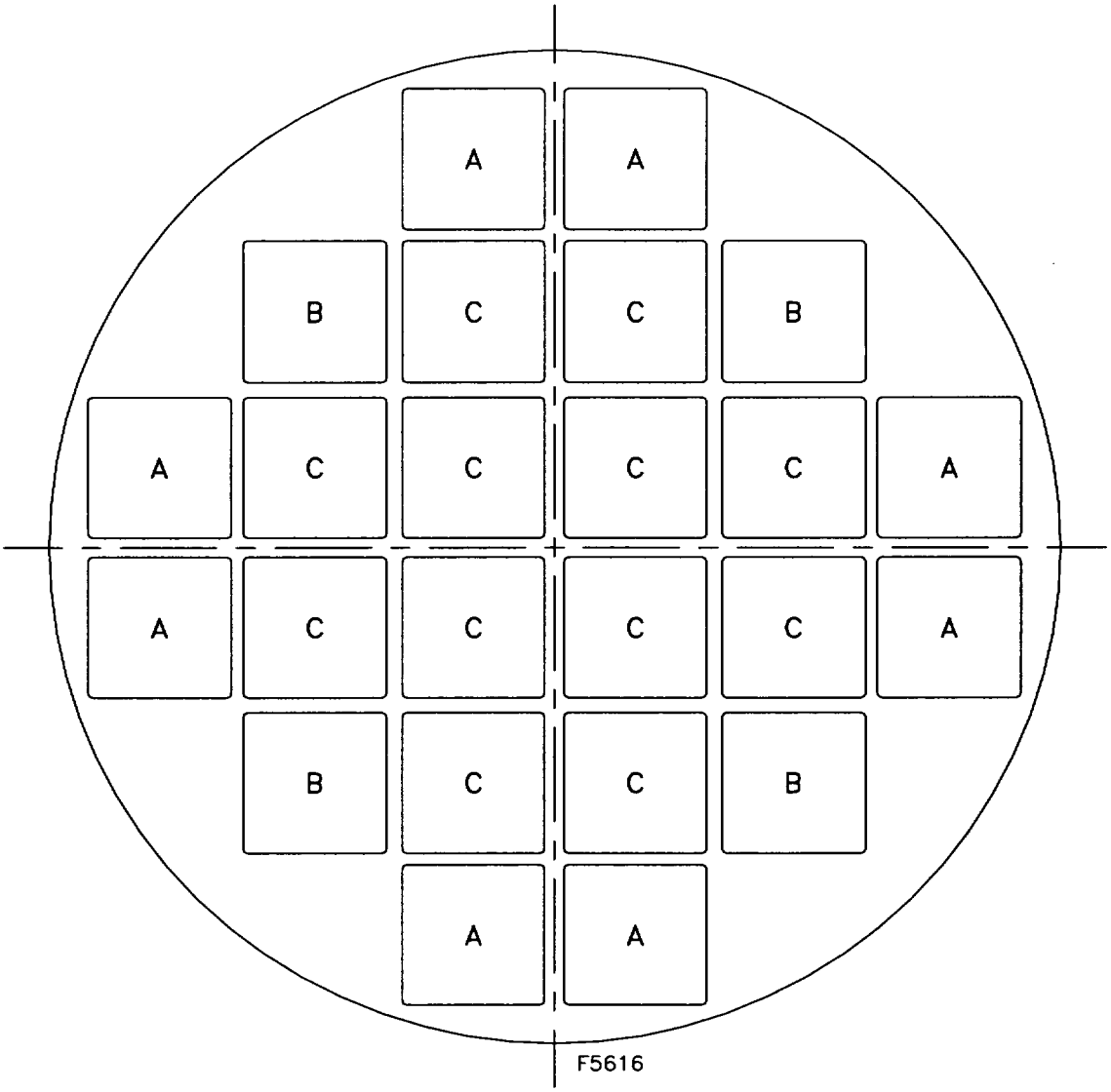

Notes:

1. Locations identified as "A" are for placement of up to 8 damaged fuel assemblies (balance intact).
2. Locations identified as "B" are for placement of up to 4 additional damaged fuel assemblies (Maximum of 12 damaged fuel assemblies allowed, Locations "A" and "B" combined) (balance intact).
3. Locations identified as "C" are for placement of up to 12 intact fuel assemblies, including 4 empty slots in the center as shown in Figure P.2-2.

Figure P.2-6
Location of Damaged Fuel Inside 24PTH DSC

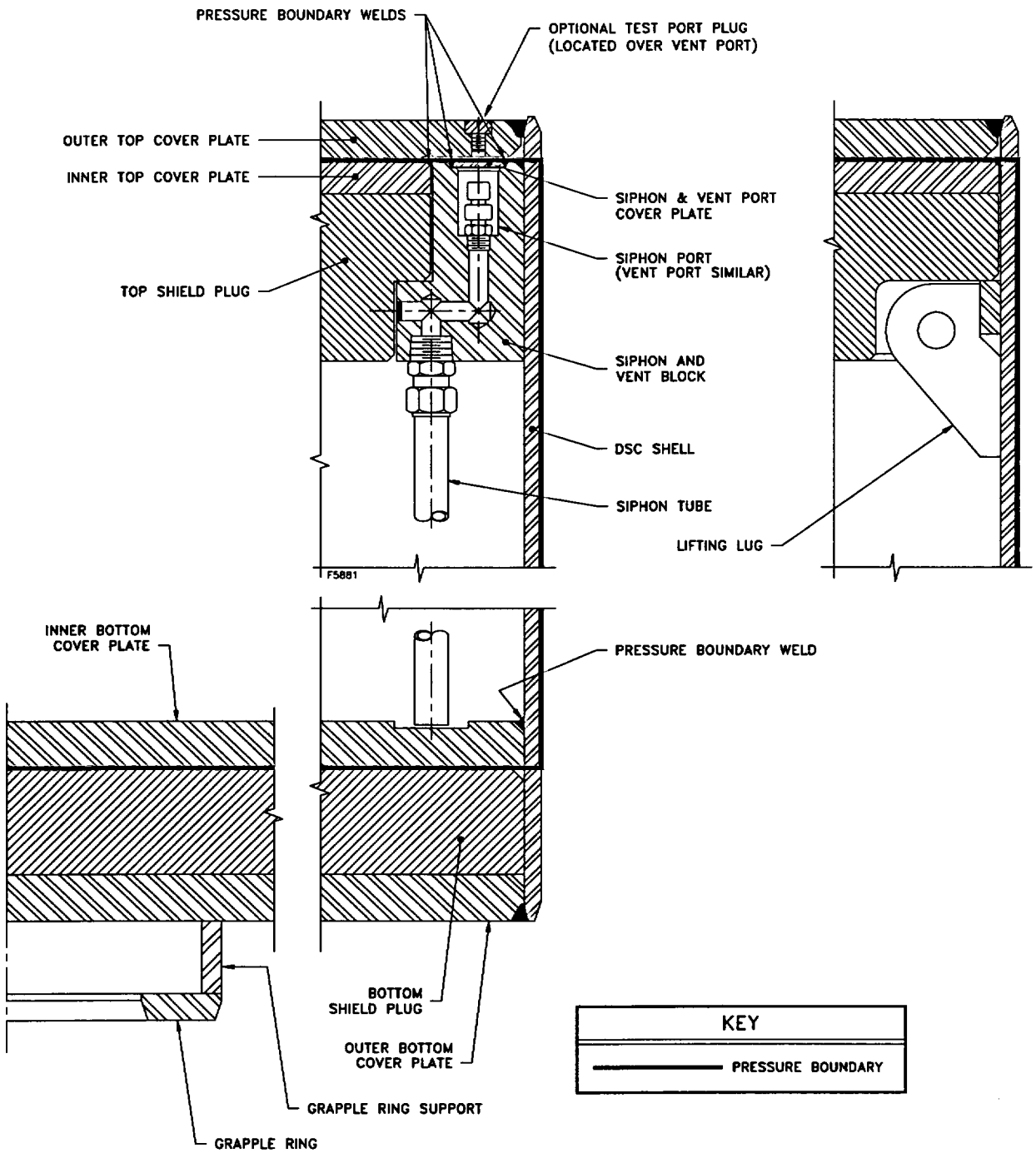

Figure P.2-7
24PTH-S and 24PTH-L DSC Pressure Boundary

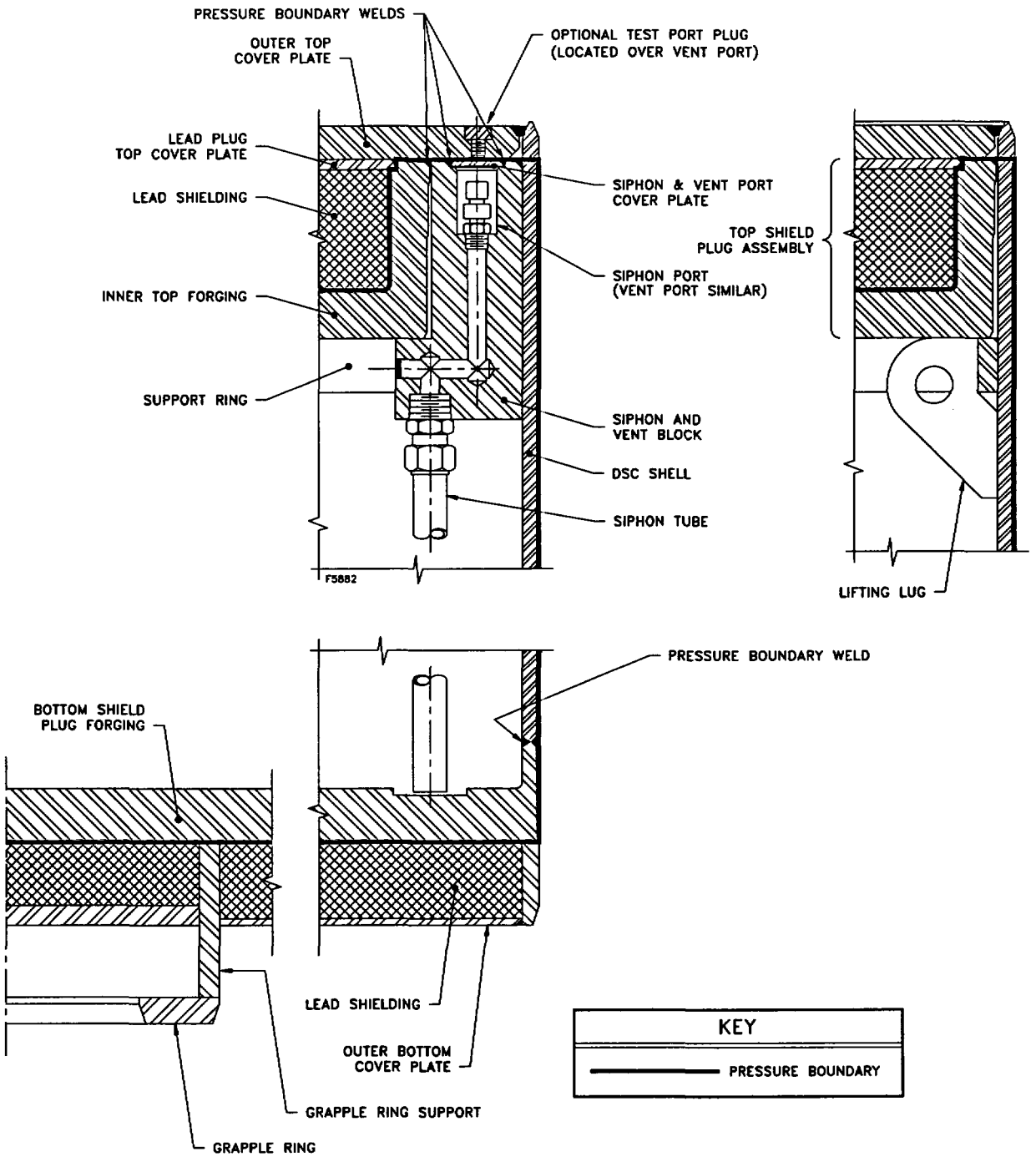

Figure P.2-8
24PTH-S–LC DSC Pressure Boundary

P.3 Structural Evaluation

P.3.1 Structural Design

P.3.1.1 Discussion

This section describes the structural evaluation of the NUHOMS®-24PTH system. The NUHOMS®-24PTH system consists of the NUHOMS® 24PTH DSC basket and shell assemblies, the HSM-H and HSM Model 102, and the OS197/OS197H/OS197FC Transfer Casks (TCs). The 24PTH DSC is a new dual purpose canister that is designed to accommodate up to 24 intact PWR fuel assemblies (or up to 12 damaged assemblies, with the remaining intact) with total heat load of up to 40.8 kW. The HSM-H is an enhanced version of the NUHOMS® Standardized HSM and incorporates design features to enable storage of the higher heat load 24PTH DSC. The OS197FC TC is the OS197/OS197H TC with a modified top lid to improve the TC's thermal performance for the higher thermal loads during transfer.

Where the new components have an effect on the structural evaluations presented in the FSAR, the changes are included in this section. Sections that do not have an effect on the evaluations presented in the FSAR include a statement that there is no change to the FSAR. In addition, a complete evaluation of the 24PTH DSC shell assembly and basket components and the HSM-H has been performed and is summarized in this section. This section also summarizes the OS197FC stress evaluation of the modified top cask lid, and the TC evaluations for the thermal profiles associated with the higher heat loads. The TC's thermal stress evaluations are applicable to the OS197/OS197H/OS197FC TCs for heat loads above 24 kW.

P.3.1.1.1 General Description of the 24PTH DSC

The 24PTH DSC shell assembly is shown on drawings NUH-24PTH-1001-SAR and NUH-24PTH-1002-SAR provided in Section P.1.5. Figure P.1.1-1 shows a schematic view of the 24PTH DSC.

There are three design types configurations for the 24PTH DSC, as shown in the table below:

24PTH DSC Type	DSC Length (Max.)	DSC Cavity Length (Nominal)
24PTH-S	186.55"	169.60"
24PTH-L	192.55"	175.60"
24PTH-S-LC	186.55"	173.28"

The 24PTH system interfaces with other NUHOMS® System components as follows:

System Configuration	24PTH DSC Type	Basket Type (2)(3)	Max. Heat Load (kW) per DSC	Transfer Cask	Storage Module
1	24PTH-S or 24PTH-L(1)	1A, 1B, or 1C	40.8	OS197FC	HSM-H
			31.2	OS197/ OS197H	HSM-H
2	24PTH-S or 24PTH-L(1)	2A, 2B, or 2C	31.2	OS197FC	HSM-H
3	24PTH-S-LC(1)	2A, 2B, or 2C	24.0	Standardized TC (solid neutron shield)	HSM (Model 102) or HSM-H

(1) Allows storage of Control Components
(2) Basket Type 1 (1A, 1B, 1C) have heat conductive aluminum inserts in the R45 basket transition rails
(3) Basket Type 2 (2A, 2B, 2C) do not have heat conductive aluminum inserts in the R45 basket transition rails

The 24PTH-S DSC and the 24PTH-L DSC shell assembly designs incorporate steel shield plugs and provide for the storage of SFAs with and without control components (CCs), respectively. The 24PTH-S-LC DSC incorporates top and bottom lead plugs; it is a "long cavity" design that provides for the storage of SFAs with CCs.

24PTH DSC Shell Assembly

The NUHOMS®-24PTH DSC shell assembly is the same as the NUHOMS®-24P DSC (or the 24P Long Cavity DSC) with the following exceptions:

- The nominal DSC shell thickness is reduced to 0.5 inch thick from 0.625 inch thick.
- The nominal thickness of the outer top cover plate is increased from 1.25 inches to 1.50 inches.
- The nominal thickness of the inner top cover plate is increased from 0.75 inches to 1.25 inches (for 24PTH-S and –L DSCs) or replaced by an integral inner top forging/lead shield plug design (for the 24PTH-S-LC DSC), similar to the 24PT4 DSC [3.17].
- For the 24PTH-S and –L DSCs, the nominal thickness of the inner bottom cover plate is increased from 0.75 inches to 1.75 inches and is designed for the internal pressure loads without taking credit for the structural support of the bottom shield plug and outer bottom cover plate. An optional configuration is added for the inner bottom cover plate that allows the use of a forging to provide the same structural function as the plate design. Also, a single forging 7.50-inch thick (equal to the sum of the individual bottom plates and bottom shield plug) is also allowed. For the 24PTH-S-LC DSC, a bottom forging and outer bottom cover plate are used to encapsulate the lead shield plug.

- The nominal thickness of the top shield plug is reduced from 8.25 inches to 6.25 inches for the 24PTH-S and 24PTH-L. For the 24PTH-S-LC DSC an integral inner top forging/lead shield plug is implemented.

- The nominal thickness of the bottom shield plug is reduced from 6.25 inches to 4.00 inches for the 24PTH-S and 24PTH-L. For the 24PTH-S-LC an integral inner bottom forging/lead shield plug is implemented.

- A test port has been added to the outer top cover plate to allow testing of the inner top cover plate welds and vent and siphon port cover plate welds to a leak tight criteria.

24PTH DSC Basket Assembly

The NUHOMS®-24PTH basket assembly is shown on drawings NUH-24PTH-1003-SAR and -1004-SAR provided in Section P.1.5. The basket assembly consists of 24 stainless steel tubes that make up a fuel compartment structure designed to accommodate up to 24 PWR fuel assemblies. The basket assembly consists of the fuel compartment structure, made up of the steel tubes, and the transition rails. Sandwiched in between the tubes are aluminum alloy 1100 plates used as heat transfer material, and neutron absorbing plates for criticality control. The tubes are welded at 8 elevations along the axial length of the basket to stainless steel insert (strap) plates. The aluminum and neutron absorbing plates, which are arranged in an egg crate configuration, are separated along the basket length by the steel insert plates. No credit is taken for the structural capacity of the aluminum heat transfer plates or neutron absorbing materials in the structural evaluation except for through-thickness bearing (compression) loads..

The basket transition rails provide the transition between the "rectangular" fuel support compartment tubes and the cylindrical internal diameter of the DSC shell. There are two types of transition rails. The aluminum rails, located on the 0°, 90°, 180° and 270° axes, are referred to as the "R90" transition rails. The steel transition rails are located on the 45°, 135°, 225° and 315° axes, and are referred to as the "R45" transition rails.

The R90 transition rails are made from sections of 6061 aluminum alloy. The structural evaluation of these rails uses properties for annealed aluminum (no credit is taken for enhanced properties obtained by heat treatment).

The R45 steel transition rails are welded steel structures fabricated with 3/8" thick Type 304 stainless steel. The stiffener plates are 3/8" thick, which are welded at 15 locations along the axial length of each rail.

The 24PTH DSC basket is provided with two alternate options: with aluminum inserts in the R45 transition rails (Type 1) or without aluminum inserts (Type 2). In addition, depending on the boron content in the basket poison plates, each basket type is designated as type A, B or C which results in six different basket types (types 1A, 1B, 1C, 2A, 2B, 2C). No credit is taken for the aluminum inserts in the structural evaluation of the steel transition rails.

The connections between the transition rails and fuel compartment tubes are not required to maintain structural capacity of the basket assembly. These connections allow free thermal

expansion of the connected parts and are designed primarily to enhance thermal performance, and simplify fabrication.

The basket structure is open at each end such that longitudinal fuel assembly loads are applied directly to the DSC/cask body and not to the basket structure. The fuel assemblies are laterally supported by the fuel compartment tube structure, which is laterally supported by the basket transition rails and the DSC inner shell.

Inside the TC, the DSC rests on two 3" wide rails ("cask rails"), attached to the inside of the TC at +/-18.5° from the bottom centerline of the DSC. In the HSM-H and HSM Model 102, the DSC is supported by rails located at +/-30° from the bottom centerline of the DSC.

The nominal open dimension of each fuel compartment cell is 8.90 in. x 8.90 in. This cross section dimension is sufficient to allow insertion of the controlling fuel assembly with enough clearance. The overall basket length is less than the DSC cavity length to allow for thermal expansion and tolerances.

The 12 fuel compartment tubes around the perimeter of the basket may be loaded with damaged fuel. End caps are installed at the bottom and top of the basket fuel compartment tube cells to contain the damaged fuel. These end caps are shown in drawing NUH24PTH-1003-SAR included in Section P.1.5.

P.3.1.1.2 General Description of the HSM-H

The HSM-H is a freestanding reinforced concrete structure designed to provide environmental protection and radiological shielding for the 24PTH-DSC. The HSM-H is designed to accommodate all three 24PTH DSC configurations (24PTH-S DSC, 24PTH-L DSC, and 24PTH-S-LC DSC). Each HSM-H provides a self contained modular structure for the storage of a 24PTH-DSC containing up to 24 PWR SFAs. The HSM-H provides heat rejection from the spent fuel decay heat by a combination of radiation, conduction and convection. Schematic sketches of the HSM-H showing the different components are provided in Figure P.1.1-2 and Figure P.1.1-3. Drawing NUH-03-7001-SAR, included in Section P.1.5, provides the nominal dimensions, materials of construction, and design parameters of the HSM-H.

The HSM-H is a reinforced concrete structure consisting of two separate units: a base, where the 24PTH-DSC is stored, and a roof that serves to provide environmental protection and radiation shielding. The roof is attached to the base by 4 vertical ties or by 4 angle brackets. Three-foot thick shield walls are installed behind each HSM-H (single row array only) and at the ends of each row to provide additional shielding and protection against missile impact.

The HSM-H modules may be prefabricated offsite, then transported to the ISFSI site and installed on a reinforced concrete basemat. The HSM-Hs are placed next to adjacent module(s) to form continuous single or double row (back-to-back) arrays. An array must have a minimum of two HSM-Hs in a row in order to meet stability requirements under the postulated design loads.

The 24PTH-DSC is supported inside the base unit on two carbon steel rails. The rail assembly spans between the front and the rear wall of the base unit and acts as a sliding surface during 24PTH-DSC insertion and retrieval.

The air inlet vents are located at the bottom of the side walls of the base unit. The air outlet vents are formed along the sides of the roof. A roof vent shield cap above the outlet vent provides additional shielding. Steel liner plates are used at the inlet and outlet vents to provide additional shielding and reduce dose rates.

For thermal protection of the HSM-H concrete, stainless steel heat shields with anodized aluminum backing plates and fins are installed on the sidewalls of the base unit. Heat shields with stainless steel mounting bars and aluminum louvers are also installed under the roof. The heat shields guide cooling airflow through the HSM-H.

The HSM-H front door is a composite door, which consists of a rectangular, or circular steel plate at the front attached to a circular thick steel plate and a circular reinforced concrete block at the rear. The door provides missile protection and shielding for the 24PTH-DSC.

During 24PTH-DSC insertion/retrieval operations, the TC is docked with the HSM-H docking surface and mechanically secured to the HSM-H cask restraint embedments provided in the front of the HSM-H base unit. These embedments are equally spaced on either side of the HSM-H access opening and serve to restrain the transfer cask during insertion/retrieval of the 24PTH-DSC.

P.3.1.1.3 General Description of the HSM Model 102

The 24PTH-S-LC DSC, which has a maximum heat load of 24 kW, is stored in either HSM-H or HSM Model 102. The description of HSM Model 102 is included in Appendix E drawings for the standardized HSM. There is no change to the design of HSM Model 102 to accommodate the 24PTH-S-LC DSC.

P.3.1.1.4 General Description of the OS197FC TC

The OS197FC TC is identical to the OS197/OS197H TCs described in the FSAR and in the drawings included in Appendix E of the FSAR, with the exception of the TC top lid, which is modified to improve the TC thermal performance. The modification consists of adding vent passages around the periphery of the TC, in between the bolt holes. The vents are added to permit airflow through the TC. Ambient air is circulated at the bottom of the TC through the ram access opening and distributed to the annular space between the DSC and the TC. The cooling air travels through the TC length and exists through the vent passages in the TC top lid. Figure P.1.1-5 shows an isometric view of the modified TC top lid. Drawing NUH-03-8000-SAR describes the OS197FC TC and Drawing NUH-03-8006-SAR shows the TC top lid modification as implemented in the OS197FC TC. These drawings are provided in Section P.1.5.

P.3.1.2 Design Criteria

The design criteria for the 24PTH DSC shell, basket and HSM-H are provided in Section P.2.2. The design criteria for the TC and HSM Model 102 are not changed.

P.3.1.2.1 24PTH DSC Shell Assembly Confinement Boundary

The primary confinement boundary consists of the DSC shell, the inner top cover plate (or inner top forging of the top shield plug assembly for the 24PTH-S-LC), the inner bottom cover plate (or the bottom forging of the bottom shield plug assembly for the 24PTH-S-LC), the siphon and vent block, the siphon/vent port cover plates, and the associated welds. Figure P.3.1-1 and Figure P.3.1-2 provide a graphic representation of the confinement boundary for the 24PTH-S (and -L) and 24PTH-S-LC DSCs, respectively. The DSC outer top cover plate forms the redundant confinement boundary.

The cylindrical shell and welds made during fabrication of the 24PTH-DSC that affect the confinement boundary of the DSC are fully compliant to Subsection NB. These include the inner bottom cover plate (or the bottom forging for the 24PTH-S-LC) to shell weld and the circumferential and longitudinal seam welds applied to the shell.

The top inner cover plate (24PTH-S and –L) or inner top forging of the top shield plug assembly (24PTH-S-LC) and associated welds, the welds applied to the vent and siphon port covers, and the closure welds applied to the vent & siphon block, define the primary confinement boundary at the top end of the 24PTH-DSC. These welds are in accordance with the alternative to ASME Code Section III requirements of ASME Code Case N-595-2. These welds are applied using a multiple-layer technique and are liquid penetrant (PT) examined in accordance with Code Case N-595-2 [3.1] and Section III NB-5000.

During fabrication, leak tests of the 24PTH-DSC shell assembly are performed in accordance with leak tight criteria of ANSI N14.5-1997 [3.13] to demonstrate that the shell is leak tight ($1x10^{-7}$ std. cm^3/sec). The DSC inner top cover closure welds, including the vent and siphon pressure boundary welds, are also leak tested after fuel loading to demonstrate that the ANSI N14.5 leak tight criteria is met following installation of the outer cover plate root pass weld.

The basis for the allowable stresses for the confinement boundary is ASME Code Section III, Division I, Subsection NB Article NB-3200 [3.1] for normal (Level A) condition loads, off-normal (Level B) condition loads and off-normal/accident (Level C) condition loads, and Appendix F for accident (Level D) condition loads. See Section P.2.2 for additional design criteria.

P.3.1.2.2 24PTH DSC Basket

The basket is designed to meet heat transfer, nuclear criticality, and structural requirements. The basket structure provides sufficient rigidity to maintain a subcritical configuration under the applied loads. The stainless steel fuel compartment tube sections in the NUHOMS®-24PTH basket are the primary structural components. The aluminum heat transfer plates and neutron poison plates are the primary heat conductors, and provide the necessary criticality control. The

stress analyses of the basket do not take credit for the neutron absorbing/heat transfer plate material. The transition rails provide support to the fuel compartment tube structure for mechanical loads and also transfer heat from the fuel compartment tubes to the DSC shell.

The basket structural design criteria is provided in Section P.2.2. The basis for the allowable stresses for the stainless steel components in the basket assembly is Section III, Division 1, Subsection NG of the ASME Code [3.1]:

- Normal conditions are evaluated using criteria from NG-3200.
- Accident conditions are classified as Level D events and are evaluated using stress and stability criteria from Section III, Appendix F of the ASME Code [3.1].

P.3.1.2.3 Alternatives to the ASME Code for the 24PTH DSC

The primary confinement boundary of the NUHOMS®-24PTH DSC consists of the DSC shell, the inner top cover plate, the inner bottom cover plate, (or the inner top and bottom forgings for the 24PTH-S-LC), the siphon and vent block, and the siphon/vent port cover plates. Even though the ASME B&PV code is not strictly applicable to the DSC, it is Transnuclear's (TN's) intent to follow Section III, Subsection NB of the Code as closely as possible for design and construction of the confinement vessel. The DSC may, however, be fabricated by other than N-stamp holders and materials may be supplied by other than ASME Certificate Holders. Thus the requirements of NCA are not imposed. TN's quality assurance requirements, which are based on 10CFR72 Subpart G and NQA-1 are imposed in lieu of the requirements of NCA-3800. The SAR is prepared in place of the ASME design and stress reports. Surveillances are performed by TN and utility personnel rather than by an Authorized Nuclear Inspector (ANI).

The basket is designed, fabricated and inspected in accordance with the ASME Code Subsection NG. The following alternative provisions to the ASME Code Section III requirements are taken:

The poison plates, and aluminum heat transfer plates are not considered for structural integrity. Therefore, these materials are not required to be Code materials. The quality assurance requirements of NQA-1 is imposed in lieu of NCA-3800. The basket is not Code stamped. Therefore, the requirements of NCA are not imposed. Fabrication and inspection surveillances are performed by TN and utility personnel rather than by an ANI.

A complete list of the alternatives to the ASME Code and corresponding justification for the NUHOMS®-24PTH DSC and basket is provided in Table P.3.1-1 and Table P.3.1-2. respectively.

Table P.3.1-1
Alternatives to the ASME Code for the NUHOMS®-24PTH DSC Confinement Boundary

Reference ASME Code Section/Article	Code Requirement	Alternatives, Justification & Compensatory Measures
NCA	All	Not compliant with NCA. TN Quality Assurance requirements, which are based on 10CFR72 Subpart G, are used in lieu of NCA-4000. Fabrication oversight is performed by TN and utility personnel in lieu of an Authorized Nuclear Inspector.
NB-1100	Requirements for Code Stamping of Components	The NUHOMS®-24PTH DSC shell is designed & fabricated in accordance with the requirements of ASME Code, Section III, Subsection NB and the alternative provisions described in this table. However, Code Stamping is not required. As Code Stamping is not required, the fabricator is not required to hold an ASME "N" or "NPT" stamp, or to be ASME Certified.
NB-2130	Material must be supplied by ASME approved material suppliers.	All materials designated as ASME on the SAR drawings are obtained from ASME approved Material Organization with ASME CMTR's. Material is certified to meet all ASME Code criteria but is not eligible for certification or Code Stamping if a non-ASME fabricator is used. As the fabricator is not required to be ASME certified, material certification to NB-2130 is not possible. Material traceability & certification are maintained in accordance with TN's NRC approved QA program.
NB-4121	Material Certification by Certificate Holder	
NB-4243 and NB-5230	Category C weld joints in vessels and similar weld joints in other components shall be full penetration joints. These welds shall be examined by UT or RT and either PT or MT	The joints between the top outer and inner cover plates (or top forging assembly for the 24PTH-S-LC) and containment shell are designed and fabricated per ASME Code Case N-595-2, which provides alternative requirements for the design and examination of spent fuel canister closures. This includes the inner top cover plate weld around the vent & siphon block and the vent and siphon block welds to the shell. The closure welds are partial penetration welds and the root and final layer are subject to PT examination (in lieu of volumetric examination) in accordance with the provisions of ASME Code Case N-595-2. The 24PTH closure system employs austenitic stainless steel shell, lid materials, and welds. Because austenitic stainless steels are not subject to brittle failure at the operating temperatures of the DSC, crack propagation is not a concern. Thus, multi-level PT examination provides reasonable assurance that flaws of interest will be identified. The PT examination is done by qualified personnel, in accordance with Section V and the acceptance standards of Section III, Subsection NB-5000. This alternative does not apply to other shell confinement welds, i.e., the longitudinal and circumferential welds of the DSC shell, and the inner bottom cover plate-to-shell weld (or bottom forging to shell weld, as applicable) which comply with NB-4243 and NB-5230.

Table P.3.1-1
Alternatives to the ASME Code for the NUHOMS®-24PTH DSC Confinement Boundary
(Concluded)

Reference ASME Code Section/Article	Code Requirement	Alternatives, Exception, Justification & Compensatory Measures
NB-6100 and 6200	All pressure retaining components and completed systems shall be pressure tested. The preferred method shall be hydrostatic test.	The NUHOMS®-24PTH DSC is pressure tested in accordance with ASME Code Case N-595-2. The shield plug support ring and the vent and siphon block are not pressure tested due to the manufacturing sequence. The support ring is not a pressure-retaining item and the vent and siphon block weld is helium leak tested after fuel is loaded to the same criteria as the inner top closure plate-to-shell weld (ANSI N14.5-1997 leaktight criteria).
NB-7000	Overpressure Protection	No overpressure protection is provided for the NUHOMS®-24PTH DSC . The function of the NUHOMS®-24PTH DSC is to contain radioactive materials under normal, off-normal and hypothetical accident conditions postulated to occur during transportation and storage. The NUHOMS®-24PTH DSC is designed to withstand the maximum possible internal pressure considering 100% fuel rod failure at maximum accident temperature. The NUHOMS®-24PTH DSC is pressure tested in accordance with ASME Code Case N-595-2.
NB-8000	Requirements for nameplates, stamping & reports per NCA-8000	The NUHOMS®-24PTH DSC nameplate provides the information required by 10CFR71, 49CFR173 and 10CFR72 as appropriate. Code stamping is not required for the NUHOMS®-24PTH DSC. In lieu of code stamping, QA data packages are prepared in accordance with the requirements of 10CFR71, 10CFR72 and TN's approved QA program.

Table P.3.1-2
Alternatives to the ASME Code for the NUHOMS®-24PTH DSC Basket Assembly

Reference ASME Code Section/Article	Code Requirement	Alternatives, Exception, Justification & Compensatory Measures
NG-1100	Requirements for Code Stamping of Components	The NUHOMS®-24PTH DSC baskets are designed & fabricated in accordance with the ASME Code, Section III, Subsection NG as described in the SAR, but Code Stamping is not required. As Code Stamping is not required, the fabricator is not required to hold an ASME N or NPT stamp or be ASME Certified.
NG-2000	Use of ASME Material	The poison material and aluminum plates are not used for structural analysis, but to provide criticality control and heat transfer. They are not ASME Code Class 1 material. Material properties in the ASME Code for Type 6061 aluminum are limited to 400°F to preclude the potential for annealing out the hardening properties. Annealed properties (as published by the Aluminum Association and the American Society of Metals) are conservatively assumed for the aluminum transition rails for use above the Code temperature limits.
NG-2130	Material must be supplied by ASME approved material suppliers.	All materials designated as ASME on the SAR drawings are obtained from ASME approved Material Organization with ASME CMTR's. Material is certified to meet all ASME Code criteria, but is not eligible for certification or Code Stamping if a non-ASME fabricator is used. As the fabricator is not required to be ASME certified, material certification to NG-2130 is not possible. Material traceability & certification are maintained in accordance with TN's NRC approved QA program.
NG-4121	Material Certification by Certificate Holder	
NG-8000	Requirements for nameplates, stamping & reports per NCA-8000	The NUHOMS®-24PTH DSC nameplate provides the information required by 10CFR71, 49CFR173 and 10CFR72 as appropriate. Code stamping is not required for the NUHOMS®-24PTH DSC. In lieu of Code stamping, QA Data packages are prepared in accordance with the requirements of 10CFR71, 10CFR72 and TN's approved QA program.
NCA	All	Not compliant with NCA as no Code stamp is used. TN Quality Assurance requirements, which are based on 10CFR72 Subpart G, are used in lieu of NCA-4000. Fabrication oversight is performed by TN and utility personnel in lieu of an Authorized Nuclear Inspector.
NG-3000/ Section II, Part D, Table 2A	Maximum temperature limit for Type 304 plate material is 800°F	Not compliant with ASME Section II Part D Table 2A material temperature limit for Type 304 steel for the postulated transfer accident case (117°F, loss of sunshade, loss of neutron shield). This is a post-drop accident scenario, where the calculated maximum steady state temperature is 862°F, the expected reduction in material strength is small (less than 1 ksi by extrapolation), and the only primary stresses in the basket grid are deadweight stresses. The recovery actions following the postulated drop accident are as described in Section 8.2.5 of the FSAR.

Table P.3.1-2
Alternatives to the ASME Code for the NUHOMS®-24PTH DSC Basket Assembly
(Concluded)

Reference ASME Code Section/Article	Code Requirement	Alternatives, Exception, Justification & Compensatory Measures
NG-3352	Table NG 3352-1 lists the permissible welded joints	The fusion (spot) type welds between the stainless steel insert plates (straps) and the stainless steel fuel compartment tube are not permissible welds per Table NG-3352-1. These welds are qualified by testing. The required minimum tested capacity of the welded connection (at each side of the tube) shall be 36 Kips (at room temperature). This value is based on a margin of safety (test-to-design) of 1.6, which is larger than the Code-implied margin of safety for Level D loads. The minimum capacity shall be determined by shear tests of individual specimens made from production material. The tests shall be corrected for temperature differences (test-to-design) and for material properties (actual-to-ASME Code minimum values) to demonstrate that the capacity of the welded connection with ASME minimum properties, tested at design temperatures, will meet the 36 Kips test requirement. The capacity of the welded connection is determined from the individual specimen test result times the number of welds on each side of the tube.

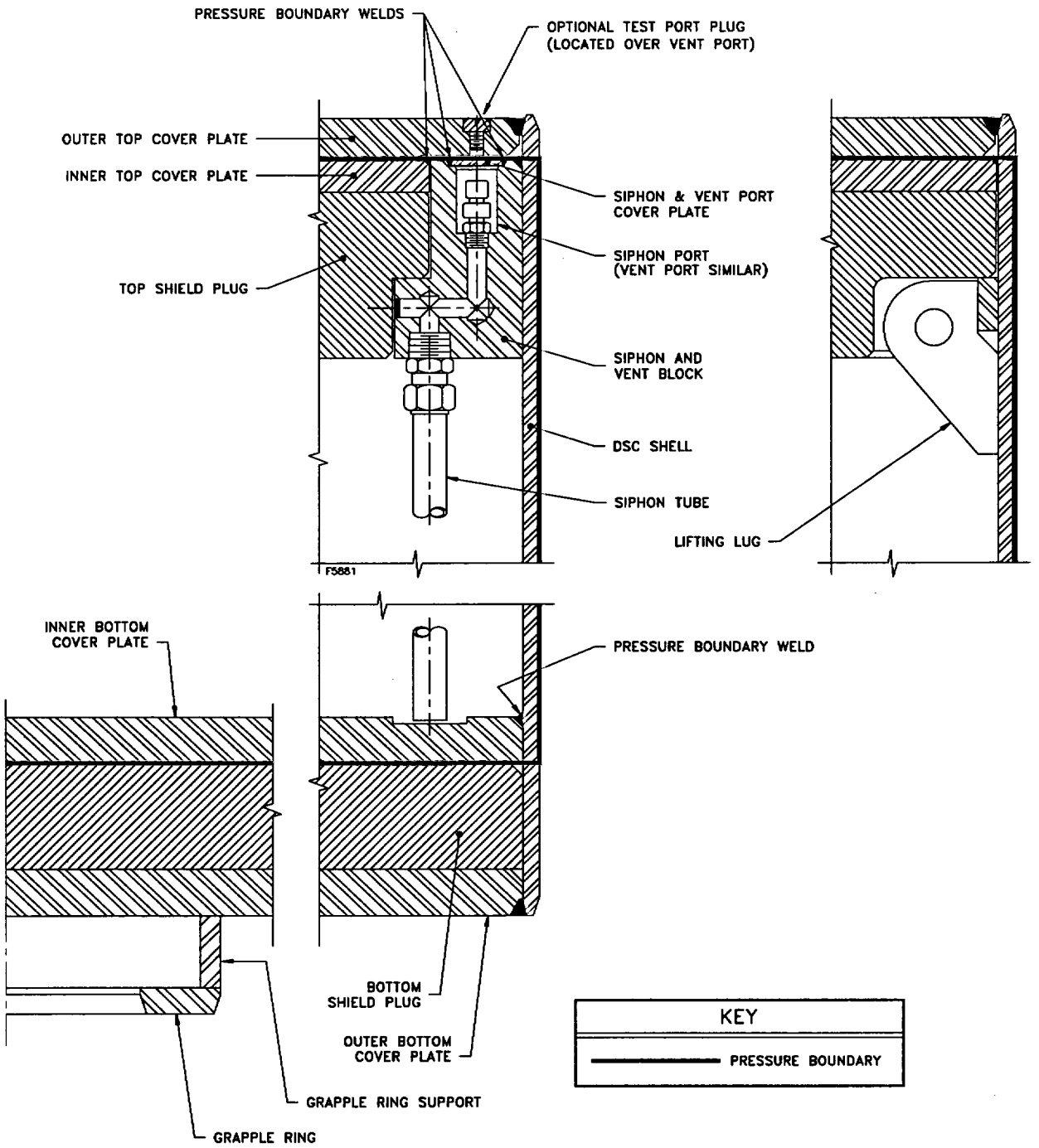

Figure P.3.1-1
24PTH-S and 24PTH-L DSC Pressure Boundary

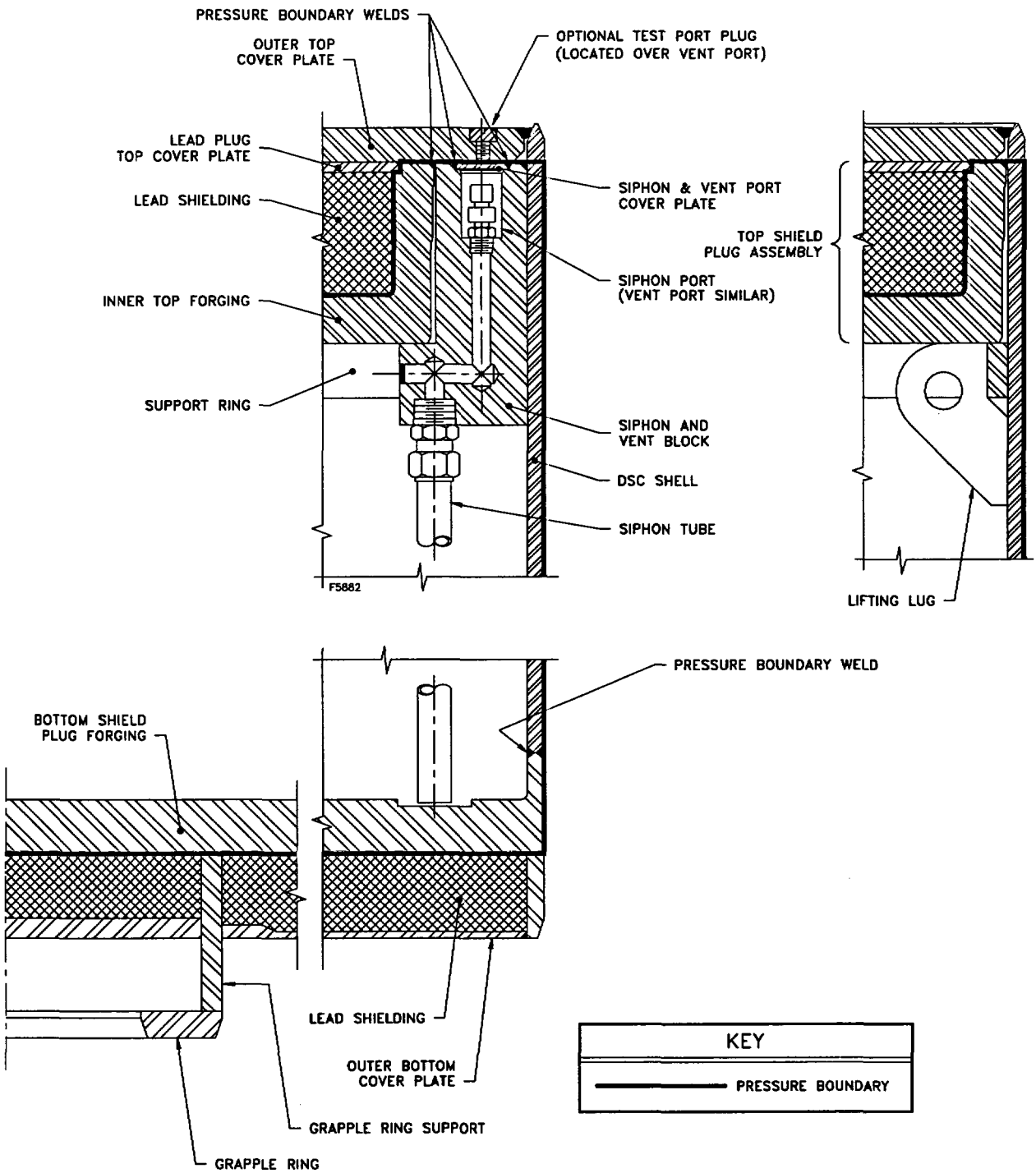

Figure P.3.1-2
24PTH-S-LC DSC Pressure Boundary

P.3.2 Weights and Centers of Gravity

Table P.3.2-1 shows the weights of the various components of the NUHOMS®-24PTH system including basket, DSC, HSM-H, and OS197FC TC. The dead weights of the components are determined based on nominal dimensions. The weights for the HSM Model 102 are not changed.

Table P.3.2-1
Summary of the NUHOMS®-24PTH System Component Nominal Weights

Component Description	CALCULATED WEIGHT (kips) [1]			
	24PTH-S	24PTH-L	24PTH-S-LC	Line Number
DSC Shell Assembly[2]	13.1	13.3	12.2	1
DSC Top Shield Plug Assembly[3]	8.8	8.8	9.7	2
DSC Internal Basket Assembly[4]	30.1/26.7	31.2/27.6	27.2	3
Total Empty Weight[4]	**52.0/48.6**	**53.3/49.7**	**49.1**	4=1+2+3
24 PWR Spent Fuel Assemblies[5]	≤40.4	≤40.4	≤40.4	5
Total Loaded DSC Weight (Dry) [4]	**92.4/89.0**	**93.7/90.1**	**89.5**	6=4+5
Water in Loaded DSC[6]	4.2	4.7	5.6	7
Total Loaded DSC Weight (Wet) [4]	**96.6/93.2**	**98.4/94.8**	**95.1**	8=6+7
TC Spacer	1.1	0.8	--	9
TC Empty Weight[7]	111.3/106.7	111.3/106.7	105.8	10
Total Loaded TC Weight[4][7]	**204.8/196.8**	**205.8/197.6**	**195.3**	11=6+9+10
HSM-H Single Module Weight Max. (Empty) HSM Model 102[8]	**306.1**	**306.1**	**306.1** **263.0**	12
HSM-H Single Module Weight Max. (Loaded) HSM Model 102[8]	**398.5**	**399.8**	**395.6** **352.5**	13=6+12

Notes:

1. All numbers are rounded up to the next hundred pounds
2. Excludes top cover plates and shield plug.
3. Includes top cover plates and shield plug.
4. For the 24PTH-S and –L weights are provided with and without the basket aluminum inserts in the R45 transition rails. The 24PTH-S-LC basket does not include aluminum inserts.
5. Based on B&W 15x15 fuel weight of 1,682 lbs per assembly (with control components).
6. Weights listed correspond to weight of water in DSC after draining 640 gallons (5,476 lbs) for hydrogen control. Total weight of water in the DSC is 9.7 kips, 10.2 kips, and 11.1 kips for 24PTH-S, 24PTH-L, and 24PTH-S-LC, respectively.
7. Includes TC top cover plate. Transfer of the 24PTH-S and –L utilizes the OS197/OS197H/OS197FC TCs. The neutron shield is filled with demineralized water. For the 24PTH-S and 24PTH-L DSCs, the TC weights provided are with and without the weight of the neutron shield water in the TC. The 24PTH-S-LC DSC utilizes the Standardized TC with a solid neutron shield.
8. The 24PTH-S-LC DSC can also be stored in the HSM Model 102. The weight for Model 102 is from Table 8.1-4.

P.3.3 Mechanical Properties of Materials

P.3.3.1 24PTH DSC Material Properties

The DSC shell and inner and outer top and bottom cover plates are fabricated from Type 304 stainless steel. The 24PTH-S-LC DSC shell assembly's top and bottom ends are fabricated from stainless steel forgings (material specification SA182 Type F304). Properties of the forging material are the same as the Type 304 plate material. The properties for the Type 304 material are from ASME Code Section II Part D [3.2] and are listed in Table P.3.3-1.

The 24PTH-S and 24PTH-L top and bottom shield plugs are fabricated from A36 carbon steel or Type 304 stainless steel. The properties for A36 carbon steel used in the analysis are from ASME Code Section II Part D [3.2], as listed in Table P.3.3-2. The 24PTH-S-LC top and bottom end steel forgings encase the lead shield plug material (ASTM B29). Properties for the ASTM B29 lead are in Table P.3.3-3.

The fuel compartment tubes in the 24PTH basket are fabricated with Type 304 stainless steel. The properties of this material are from ASME Code Section II, Part D [3.2] and are listed in Table P.3.3-1.

The steel transition rails (R45 rails) in the 24PTH basket are fabricated with Type 304 stainless steel. The properties of this material are from ASME Code Section II, Part D [3.2] and are listed in Table P.3.3-1.

The aluminum transition rails (R90 rails) use sections of Type 6061 aluminum. Analysis properties are taken from [3.3] for annealed aluminum. Use of properties for annealed material ensures that no credit is taken for enhanced properties obtained by heat treatment. The selection of properties for annealed material is based on the possibility that the maximum temperature in the rails may exceed the temperatures for which strength properties are provided (for aluminum) in the ASME Code (see Table P.3.3-4). This is acceptable for the following reasons:

1. The R90 transition rails are not pressure boundary parts. Loading on the rails is primarily bearing and the transition rails are "captured" between the fuel compartment tube structure and the DSC shell. Deformation of the transition rails (to conform to the inside diameter of the DSC shell) will distribute the applied loads and will not adversely impact the basket structure.

2. For applications where the aluminum properties result from heat treatment, it is necessary to limit the maximum temperature to values below which the effects of the heat treatment are maintained. Heat treatment provides significant differences in strength properties at low temperatures. However, as temperature increases, the effect(s) of heat treatment on strength properties decreases. The strength properties used in the design of the 24PTH are based on annealed aluminum. Thus, changes in strength which may occur under exposure to temperatures exceeding 400°F have no adverse impact on the properties used in the design.

For the stress analyses of the 24PTH basket, material properties for the Type 304 steel materials are taken from Table P.3.3-1. For elastic-plastic analyses, the plastic slope is taken as 0.05E (5% of the elastic modulus at temperature). Properties for the aluminum rails are taken directly from Table P.3.3-5 [3.3]. For elastic-plastic analyses, the plastic slope of the aluminum is taken as 0.01E. This approximates elastic-perfectly plastic properties while providing a small stiffness to enhance analytical stability.

Table P.3.3-6 provides additional material properties.

P.3.3.2 HSM-H Material Properties

The temperature dependent material properties for concrete and reinforcing steel are taken from [3.26] and are provided in Table P.3.3-7 and Table P.3.3-8 respectively.

The material properties of the ASTM A992 steel used for fabrication of the rails of the support structure are listed in Table P.3.3-9. The material properties used for the Type 304 stainless steel used for the heat shield support plate and the A36 steel used for the rail assembly extension plates are provided in Table 8.1-3. The heat shield fins, the aluminum backing sheet, and the louvered heat shield are made of commercial grade aluminum.

P.3.3.3 Materials Durability

The materials used in the fabrication of the NUHOMS®-24PTH system are shown in Table P.3.3-1 through Table P.3.3-9. Essentially all of the materials meet the appropriate requirements of the ASME Code, ACI Code, and appropriate ASTM Standards. The durability of the DSC shell assembly and basket assembly stainless steel components and the HSM-H steel components is well beyond the design life of the applicable components. The aluminum material used in the basket is only relied upon for its thermal conductivity and bearing strength properties. The poison material selected for criticality control of the NUHOMS®-24PTH system has been tested and is currently in use for similar applications. Additionally, the NUHOMS®-24PTH basket assembly resides in an inert helium gas environment for the majority of the design life. The specifications controlling the mix of concrete, specified minimum concrete strength requirements, and fabrication control ensure durability of the materials for this application. Therefore, the materials used in the NUHOMS®-24PTH system will maintain the required properties for the design life of the system.

Table P.3.3-1
ASME Code Materials Data For SA-240 Type 304 and SA-182 Type F304 Stainless Steel

Temp. (°F)	E (ksi)	S_m (ksi)	S_y (ksi)	S_u (ksi)	α_{AVG} (x 10^{-6}°F^{-1})
-100	29,100	--	--	--	--
-20	--	20.0	30.0	75.0	--
70	28,300	--	--	--	8.5
100	--	20.0	30.0	75.0	8.6
200	27,600	20.0	25.0	71.0	8.9
300	27,000	20.0	22.4	66.2	9.2
400	26,500	18.7	20.7	64.0	9.5
500	25,800	17.5	19.4	63.4	9.7
600	25,300	16.4	18.4	63.4	9.8
650	--	16.2	18.0	63.4	9.9
700	24,800	16.0	17.6	63.4	10.0
750	--	15.6	17.2	63.3	10.0
800	24,100	15.2	16.9	62.8	10.1
Reference Section II-D	Table TM-1 Group G	Table 2A	Table Y-1	Table U	18Cr-8Ni TE-1, Group 3

Table P.3.3-2
Materials Data For ASTM A36 Steel

(Properties are taken from ASME Code Section II for SA-36 Steel. The ASME material specification is identical to the ASTM A36 Steel specification.)

Temp. (°F)	E (ksi)	S_m (ksi)	S_y (ksi)	S_u (ksi)	α_{AVG} (x 10^{-6} °F^{-1})
-100	30,200	--	--	--	--
-20	--	19.3	36.0	58.0	--
70	29,500	19.3	36.0	58.0	6.4
100	--	19.3	36.0	58.0	6.5
200	28,800	19.3	33.0	58.0	6.7
300	28,300	19.3	31.8	58.0	6.9
400	27,700	19.3	30.8	58.0	7.1
500	27,300	19.3	29.3	58.0	7.3
600	26,700	17.7	27.6	58.0	7.4
650	--	17.4	26.7	58.0	7.5
700	25,500	17.3	25.8	58.0	7.6
750	--	--	--	57.3	7.7
800	24,200	--	--	53.3	7.8

Table P.3.3-3
Static Mechanical Properties for ASTM B29 Lead

Temp (°F)	E (ksi)	Sy (ksi)		Su (ksi)	α_{avg} ($x10^{-6}$ °F^{-1})
		Tension	Compression	Tension	
-99	2,500	--	--	--	15.28
70	2,340	--	--	--	16.07
100	2,300	0.584	0.49	1.57	16.21
175	2,200	0.509	0.428	1.16	16.58
250	2,090	0.498	0.391	0.844	16.95
325	1,960	0.311	0.32	0.642	17.54
440	1,740	--	--	--	18.5
620	1,360	--	--	--	20.39

Table P.3.3-4
ASME Code Properties for 6061 Aluminum

Temperature	Yield Strength (ksi)		E	α
(°F)	A96061-T451	A96061-T651	(ksi)	(x 10^{-6} °F^{-1})
75	16.0	35.0	10,000	12.1
100	16.0	35.0	--	12.4
150	15.7	34.6	--	12.7
200	15.5	33.7	9,600	13.0
250	15.3	32.4	--	13.1
300	15.3	27.4	9,200	13.3
350	15.3	20.0	--	13.4
400	11.6	13.3	8,700	13.6
450	--	--	--	13.8
500	--	--	8,100	13.9
550	--	--	--	14.1
600	--	--	--	14.2
Reference	Table Y-1 .250" - 3.00"	Table Y-1 .250" - 6.00"	Table TM-2 A96061	Table TE-2

Table P.3.3-5
Analysis Properties for Aluminum Transition Rails

Temperature (°F)	S_u, 6061-O (ksi)	S_y, 6061-O (ksi)	E (ksi)
75	18.0	8.0	9,900
212	18.0	8.0	9,500
300	15.0	8.0	9,100
350	12.0	8.0	8,900
400	10.0	7.5	8,600
450	8.5	6.0	8,300
500	7.0	5.5	7,900
600	5.0	4.2	6,800
700	3.6	3.0	5,500
800	2.8	2.2	--
900	2.2	1.6	--
1000	1.6	1.2	--

Table P.3.3-6
Additional Material Properties

Material Property	Value	Reference [3.2]
Aluminum Density (1100 and 6061)	0.098 lb/in^3	Section II, Part D, Table NF-2
Aluminum Melting Point (Alloy 1100)	1190°F - 1215°F	Section II, Part D, Table NF-2
Aluminum Melting Point (Alloy 6061)	1080°F - 1205°F	Section II, Part D, Table NF-2
Neutron Absorber Density	0.098 lb/in^3	Taken as equal to the density of pure aluminum
Steel Density	0.285 lb/in^3	

Table P.3.3-7
Concrete Properties

Material	Temperature (°F)	28 Day Compressive Strength, f_c (ksi)	Modulus of Elasticity, E (1.0E3 ksi)	Coefficient of Thermal Expansion, α ($x10^{-6}$ °F^{-1})
Concrete Normal Weight 5000 psi Strength	100	5.0	4.0	5.5
	200	5.0	3.6	5.5
	300	4.8	3.3	5.5
	400	4.5	3.0	5.5
	500	4.5	2.9	5.5

Table P.3.3-8
Reinforcing Steel Material Properties at Temperature

Material	Temperature °F	Yield Strength (ksi)	Modulus of Elasticity E (1.0 E3 ksi)
Reinforcing Steel, ASTM A6I5 Grade 60 (1)	100	60.0	29.0
	200	57.0	28.4
	300	54.0	27.8
	400	51.0	27.3
	500	51.0	27.0

Note
(1) Reinforcing steel data obtained from Handbook of Concrete Engineering [3.26].

Table P.3.3-9
Materials Data for ASTM A992 Steel

Material	Temperature (°F)	Yield Strength, f_y (ksi)	Modulus of Elasticity, E[1] (ksi)	α_{AVG}[1] ($1x10^{-6}$ °F^{-1})
ASTM A992 Steel	70	50.0	29,500	--
	100	50.0	--	5.53
	200	45.6	28,800	5.89
	400	42.8	27,700	6.61
	500	40.4	27,300	6.91
	600	36.9	26,700	7.17
	700	36.0	25,500	7.41

(1) E and α are assumed to be same as that of ASTM A36 steel as shown in Table 8.1-3. Yield strength f_y for ASTM A992 material is assumed to vary with temperature in same proportion as A36 steel.

P.3.4 General Standards for Casks

P.3.4.1 Chemical and Galvanic Reactions

The materials of the 24PTH DSC shell and basket have been reviewed to determine whether chemical, galvanic or other reactions among the materials, contents and environment might occur during any phase of loading, unloading, handling or storage. This review is summarized below:

The 24PTH DSC is exposed to the following environments:

- During loading and unloading, the DSC is placed inside of the TC. The annulus between the cask and DSC is filled with demineralized water and an inflatable seal is used to cover the annulus between the DSC and cask. The exterior of the DSC will not be exposed to pool water.

- The space between the top of the DSC and inside of the TC is sealed to prevent contamination. For PWR plants the pool water is borated. This affects the interior surfaces of the DSC, the shield plug, and the basket. The TC and DSC are kept in the spent fuel pool for a short period of time, typically about 6 hours to load or unload fuel, and 2 hours to lift the loaded TC/DSC out of the spent fuel pool.

- During storage, the interior of the DSC is exposed to an inert helium environment. The helium environment does not support the occurrence of chemical or galvanic reactions because both moisture and oxygen must be present for a reaction to occur. The DSC is thoroughly dried before storage by a vacuum drying process. It is then backfilled with helium, thus stopping corrosion. Since the DSC is vacuum dried, galvanic corrosion is also precluded as no water is present at the point of contact between dissimilar metals.

- During storage, the exterior of the DSC is protected by the concrete NUHOMS® HSM Model 102 or HSM-H. The HSM Model 102 and the HSM-H is vented, so the exterior of the DSC is exposed to the atmosphere. The DSC shell and cover plates are fabricated from austenitic stainless steel and are resistant to corrosion.

The NUHOMS®-24PTH DSC materials are shown in the Parts List on Drawings NUH-24PTH-1001-SAR through NUH-24PTH-1004-SAR provided in Section P.1.5. The DSC shell material is SA-240 Type 304 Stainless Steel. The top and bottom shield plug material is A36 carbon steel. The top shield plug is coated with a corrosion resistant electroless nickel coating. Alternatively, the top shield plug may be fabricated from Type 304 stainless steel (without coating). The bottom shield plug is sealed within the shell and inner and outer bottom cover plates and, thus, it does not come in contact with the external environment. For the 24PTH-S-LC DSC, the shell assembly top and bottom ends include stainless steel-enclosed and sealed lead in the shield plugs. The lead is not exposed to the external environment and is thus not subject to any chemical reactions.

The basket fuel compartment structure is composed of tube assemblies made from Type 304 stainless steel. Sandwiched between the tube assemblies are plates of Type 1100 aluminum and neutron absorbing materials composed of either enriched borated aluminum alloy, natural boron,

or Boral® plates. These plates are not fastened to the fuel compartment tube structure but are captured along the axial length of the basket by stainless steel insert plates (straps) that are welded to the fuel compartment tubes.

There are two types of transition rails that provide the transition between the fuel compartment structure and the DSC shell. The aluminum transition rails (R90 rails) are made of Type 6061 aluminum. The stainless steel rails (R45 rails) consist of welded Type 304 stainless steel plates with optional Type 1100 aluminum inserts between the stiffener plates. The transition rails are attached to the grid structure using corrosion resistant fasteners. Similarly, the optional Type 1100 aluminum inserts installed in between the stiffener plates in the R45 transition rails are attached using corrosion resistant fasteners.

Potential sources of chemical or galvanic reactions are the interaction between the aluminum, aluminum-based neutron poison and stainless steel within the basket and the pool water. Additionally, an interaction exists with the stainless steel top and bottom plates and the top shield plug.

Behavior of Aluminum in Borated Water

Aluminum is used for many applications in spent fuel pools. In order to understand the corrosion resistance of aluminum within the normal operating conditions of spent fuel storage pools, a discussion of each of the types of corrosion is addressed separately. None of these corrosion mechanisms is expected to occur in the short time period that the cask is submerged in the spent fuel pool.

General Corrosion

General corrosion is a uniform attack of the metal over the entire surfaces exposed to the corrosive media. The severity of general corrosion of aluminum depends upon the chemical nature and temperature of the electrolyte and can range from superficial etching and staining to dissolution of the metal. Figure P.3.4-1 shows a potential-pH diagram for aluminum in high purity water at 77°F and 140°F. The potential for aluminum coupled with stainless steel and the limits of pH for PWR pools are shown in the diagram to be well within the passivation domain at both temperatures. The passivated surface of aluminum (hydrated oxide of aluminum) affords protection against corrosion in the domain shown because the coating is insoluble, non-porous and adherent to the surface of the aluminum. The protective surface formed on the aluminum is known to be stable up to 275°F and in a pH range of 4.5 to 8.5.

The water aluminum reactions are self-limiting because the surface of the aluminum becomes passive by the formation of a protective and impervious coating making further reaction impossible until the coating is removed by mechanical or chemical means.

The ability of aluminum to resist corrosion from boron ions is evident from the wide usage of aluminum in the handling of borax and in the manufacture of boric acid. Aluminum storage racks with Boral plates (aluminum 1100 exterior layer) in contact with 800 ppm borated water showed only small amounts of pitting after 17 years in the pool at the Yankee Rowe Power Plant. These racks maintained their structural integrity.

During immersion in the spent fuel pool, the 24PTH-DSC basket temperatures are close to the water temperature, which is typically near 80°F, and the pH range is typically 4.0 to 6.5. Based on the above discussion, general corrosion is not expected on the aluminum after the protective coating has been formed.

Galvanic Corrosion

Galvanic corrosion is a type of corrosion which could cause degradation of dissimilar metals exposed to a corrosive environment for a long period of time.

Galvanic corrosion is associated with the current of a galvanic cell consisting of two dissimilar conductors in an electrolyte. The two dissimilar conductors of interest in this discussion are aluminum and stainless steel in borated water. There is little galvanic corrosion in borated water since the water conductivity is very low. There is also less galvanic current flow between the aluminum-stainless steel couple than the potential difference on stainless steel which is known as polarization. It is because of this polarization characteristic that stainless steel is compatible with aluminum in all but severe marine, or high chloride, environmental conditions [3.4].

Pitting Corrosion

Pitting corrosion is the forming of small sharp cavities in a metal surface. The first step in the development of corrosion pits is a local destruction of the protective oxide film. Pitting will not occur on commercially pure aluminum when the water is kept sufficiently pure, even when the aluminum is in electrical contact with stainless steel. Pitting and other forms of localized corrosion occur under conditions like those that cause stress corrosion, and are subject to an induction time which is similarly affected by temperature and the concentration of oxygen and chlorides. As with stress corrosion, at the low temperatures and low chloride concentrations of a spent fuel pool, the induction time for initiation of localized corrosion will be greater than the time that the DSC internal components are exposed to the aqueous environment.

Crevice Corrosion

Crevice corrosion is the corrosion of a metal that is caused by the concentration of dissolved salts, metal ions, oxygen or other gases in crevices or pockets remote from the principal fluid stream, with a resultant build-up of differential galvanic cells that ultimately cause pitting. Crevice corrosion could occur in the basket grid assembly plates around the stainless steel welds. However, due to the short time in the spent fuel pool, this type of corrosion is expected to be insignificant.

Intergranular Corrosion

Intergranular corrosion is corrosion occurring preferentially at grain boundaries or closely adjacent regions without appreciable attack of the grains or crystals of the metal itself. Intergranular corrosion does not occur with commercially pure aluminum and other common work hardened aluminum alloys.

Stress Corrosion

Stress corrosion is failure of the metal by cracking under the combined action of corrosion and stresses approaching the yield stress of the metal. During spent fuel pool operations, the 24PTH-DSC is upright and there is negligible load on the basket assembly. The stresses on the basket are small, well below the yield stress of the basket materials.

Behavior of Austenitic Stainless Steel in Borated Water

The fuel compartment structure is made from Type 304 stainless steel tubes and the transition rails that support the fuel compartments are made from aluminum Type 6061 (R90 rails) and welded Type 304 stainless steel plates (R45 rails). Stainless steel does not exhibit general corrosion when immersed in borated water. Galvanic attack can occur between the aluminum in contact with the stainless steel in the water. However, the attack is mitigated by the passivity of the aluminum and the stainless steel in the short time the pool water is in the DSC. Also the low conductivity of the pool water tends to minimize galvanic reactions.

Stress corrosion cracking in the Type 304 stainless steel welds of the basket is also not expected to occur, since the baskets are not highly stressed during normal operations. There may be some residual fabrication stresses as a result of welding of the stainless steel plates together.

Of the corrosive agents that could initiate stress corrosion cracking in the stainless steel basket welds, only the combination of chloride ions with dissolved oxygen occurs in spent fuel pool water. Although stress corrosion cracking can take place at very low chloride concentrations and at low temperatures such as those in spent fuel pools (less than 10 ppb and 160°F, respectively), the effect of low chloride concentration and low temperature greatly increases the induction time. That is, the time period during which the corrodent is breaking down the passive oxide film on the stainless steel surface is increased. Below 60°C (140°F), stress corrosion cracking of austenitic stainless steel does not occur at all. At 100°C (212 °F), chloride concentration on the order of 15% is required to initiate stress corrosion cracking [3.5]. At 288 °C (550 °F), with tensile stress at 100% of yield in PWR water that contains 100 ppm O_2, time to crack is about 40 days in sensitized 304 stainless steel [3.6]. Thus, the combination of low chlorides, low temperature and short time of exposure to the corrosive environment eliminates the possibility of stress corrosion cracking in the basket and DSC welds.

The chloride content of all expendable materials which come in contact with the basket materials are restricted and water used for cleaning the baskets is restricted to 1.0 ppm chloride.

Behavior of Aluminum Based Neutron Poison in Borated Water

To investigate the use of borated aluminum in a spent fuel pool, tests were performed by Eagle Picher to evaluate its dimensional stability, corrosion resistance and neutron capture ability. These studies showed that borated aluminum performed well in a spent fuel pool environment.

The 1100 series aluminum component is a ductile metal having a high resistance to corrosion. Its corrosion resistance is provided by the buildup of a protective oxide film on the metal surface when exposed to a water or moisture environment. As stated above, for aluminum, once a stable

film develops, the corrosion process is arrested at the surface of the metal. The film remains stable over a pH range of 4.5 to 8.5.

Tests were performed by Eagle Picher which concluded that borated aluminum exhibits a strong corrosion resistance at room temperature in either reactor grade deionized water or in 2000 ppm borated water. The behavior is only slightly different than 1100 series aluminum; hence, satisfactory long-term usage in these environments is expected. Neutron irradiation up to 10^{17} n/cm^2 level did not cause any measurable dimensional changes or any other damage to the material.

At high temperature, the borated aluminum still exhibits high corrosion resistance in the pure water environment. However, at temperatures of 80°C, in 2000 ppm borated water, local pitting corrosion has been observed. At 100°C and room temperature, the pitting attack was less than at 80°C. In all cases, passivation occurs limiting the pit depth.

From tests on pure aluminum, it was found that borated aluminum was more resistant to uniform corrosion attack than pure aluminum. Local pitting corrosion can occur over time, causing localized damage to the borated aluminum.

There are no chemical, galvanic or other reactions that could reduce the areal density of boron in the 24PTH-DSC neutron poison plates.

Electroless Nickel Plated Carbon Steel

The carbon steel top shield plug of the DSC (option in 24PTH-S and –L) is plated with electroless nickel. This coating is identical to the coating used on the NUHOMS®-52B DSC. It has been evaluated for potential galvanic reactions in Transnuclear West's response to NRC Bulletin 96-04 [3.7]. In PWR pools, the reported corrosion rates are insignificant and are expected to result in a negligible rate of reaction for the NUHOMS® PWR systems.

Lubricants and Cleaning Agents

Lubricants and cleaning agents used on the NUHOMS®-24PTH DSC are limited to those with chlorine contents of less than 1 ppm chloride. Never-seez or Neolube (or equivalent) is used to coat the threads and bolt shoulders of the closure bolts. The lubricant should be selected for compatibility with the spent fuel pool water and the DSC materials, and for its ability to maintain lubricity under long-term storage conditions.

The DSC is cleaned in accordance with approved procedures to remove cleaning residues prior to shipment to the storage site. The basket is also cleaned prior to installation in the DSC. The cleaning agents and lubricants have no significant affect on the DSC materials and their safety related functions.

Hydrogen Generation

During the initial passivation state, small amounts of hydrogen gas may be generated in the 24PTH DSC. The passivation stage may occur prior to submersion of the TC into the spent fuel

pool. Any amounts of hydrogen generated in the DSC will be insignificant and will not result in a flammable gas mixture within the DSC.

The small amount of hydrogen which may be generated during DSC operations does not result in a safety hazard. In order for concentrations of hydrogen in the cask to reach flammability levels, most of the DSC would have to be filled with water for the hydrogen generation to occur, and the lid would have to be in place with both the vent and drain ports closed. This does not occur during DSC loading or unloading operations.

An estimate of the maximum hydrogen concentration can be made, ignoring the effects of radiolysis, recombination, and solution of hydrogen in water. Testing was conducted by Transnuclear [3.9] to determine the rate of hydrogen generation for aluminum metal matrix composite in intermittent contact with 304 stainless steel. The samples represent the neutron poison plates paired with the basket compartment tubes. The test specimens were submerged in deionized water for 12 hours at 70 °F to represent the period of initial submersion and fuel loading, followed by 12 hours at 150 °F to represent the period after the fuel is loaded, until the water is drained. The hydrogen generated during each period was removed from the water and the test vessel and measured. Since the test was performed in deionized water, and the 24PTH DSC will be used in borated water, the test results over-predict the hydrogen generation rates.

The test results were:

	12 hours @ 70°F		12 hours @ 150°F	
Aluminum MMC/SS304	$cm^3hr^{-1}dm^{-2}$	$ft^3hr^{-1}ft^{-2}$	$cm^3hr^{-1}dm^{-2}$	$ft^3hr^{-1}ft^{-2}$
	0.517	1.696E-4	0.489	1.604E-4

During the welding cycle, the most limiting case for hydrogen concentration is the 24PTH-L DSC with stainless steel rails because it has the most aluminum surface area. The total surface area of all aluminum components including the neutron absorber plates is 3554 ft^2. After 633 gallons of water has been drained, 1586 ft^2 of aluminum remains submerged. This surface area, combined with the test data at 150°F above result in a hydrogen generation rate of

$$(1.60\text{x}10^{-4}\ ft^3/ft^2hr)(1586\ ft^2) \quad = 0.25\ ft^3/hr$$

The minimum free volume of the DSC is 84.6 ft3, which is equivalent to the 633 gallons of water drained from the DSC cavity. The following assumptions are made to arrive at a conservative estimate of hydrogen concentration:

- All generated hydrogen is released instantly to the plenum between the water and the shield plug, that is, no dissolved hydrogen is pumped out with the water, and no released hydrogen escapes through the open vent port, and

- The welding and backfilling process takes 8 hours to complete.

Under these assumptions, the hydrogen concentration in the space between the water and the shield plug is a function of the time water is in the DSC prior to backfilling with helium. The hydrogen concentration is (0.25 ft^3 H_2/hr)*(8 hr) / (84.6 ft^3) = 2.36%. Monitoring of the hydrogen concentration before and during welding operations is performed to ensure that the hydrogen concentration does not exceed 2.4%, which is well below the ignitable limit of 4%. If the hydrogen concentration exceeds 2.4%, welding operations are suspended and the DSC is purged with an inert gas. In an inert atmosphere, hydrogen will not be generated.

Effect of Galvanic Reactions on the Performance of the System

There are no significant reactions that could reduce the overall integrity of the DSC or its contents during storage. The DSC and fuel cladding thermal properties are provided in Section P.4. The surface emissivity of the fuel compartment tube is 0.46, which is typical for non-polished stainless steel surfaces. If the stainless steel is oxidized, this value would increase, improving heat transfer. The fuel rod emissivity value used is 0.80, which is a typical value for oxidized Zircaloy. Therefore, the passivation reactions would not reduce the thermal properties of the component cask materials or the fuel cladding.

There are no reactions that would cause binding of the mechanical surfaces or the fuel to basket compartment boxes due to galvanic or chemical reactions.

There is no significant degradation of any safety components caused directly by the effects of the reactions or by the effects of the reactions combined with the effects of long term exposure of the materials to neutron or gamma radiation, high temperatures, or other possible conditions.

P.3.4.2 Positive Closure

Positive closure is provided by the OS197, OS197H, OS197FC and Standardized TCs. No change.

P.3.4.3 Lifting Devices

As described in Section 8.1.1.9 (B), the evaluations for the OS197 and OS197H TC trunnions are based on critical lift weights (with water in the DSC) of 208,500 lbs and 250,000 lbs, respectively. These lifted weights capacities are not changed for the OS197FC since the only design feature that is different between the OS197/OS197H and the OS197FC is the top lid. The maximum critical lift weight with a NUHOMS®-24PTH DSC is approximately 215,000 lbs. Therefore, an OS197FC TC that is based on the OS197H design is acceptable with any NUHOMS®-24PTH DSC. An OS197FC TC that is based on the OS197 design is limited to a total critical lift weight of 208,500 lbs.

P.3.4.4 Heat and Cold

P.3.4.4.1 Summary of Pressures and Temperatures

Temperatures and pressures for the 24PTH DSC and basket are calculated in Section P.4. Section P.4.4 provides the thermal evaluation of the HSM-H/HSM. Section P.4.7 provides the

thermal evaluation of the transfer cask. Section P.4.6 provides the thermal evaluation of the DSC.

Section P.4.6 also provides the maximum pressures during normal, off-normal and accident conditions which are used in the evaluations presented later in this Appendix.

P.3.4.4.2 Differential Thermal Expansion

Clearances are provided between the various components of the 24PTH DSC to accommodate differential thermal expansion and to minimize thermal stress. In the radial direction clearance is provided between the basket outer diameter and DSC cavity inside diameter, and between the poison/aluminum plates and the interfacing basket components. In the axial direction clearances are provided between the DSC cavity and all the basket parts (support structure tube, transition rails). Additionally, the connections between the transition rails and the fuel support structure are designed to permit relative axial growth.

- In the axial direction, required clearances are determined using hand calculations.
- In the "radial" direction, clearance between the neutron absorbing/aluminum heat transfer plate materials and the transition rails is evaluated using hand calculations.
- In the "radial" direction, clearance between the basket assembly (fuel support structure tube and transition rails) was included in the LS-DYNA thermal stress analyses described in Section P.3.4.4.3.1. The normal and off- normal condition stress analyses are described in P.3.6 and the accident condition analyses are described in P.3.7. Thus, stresses due to any thermal interference are included in the stress results.

Results from the LS-DYNA thermal stress evaluations are described in Section P.3.4.4.3.1.

The thermal analyses of the basket for the handling/transfer and storage conditions are described in Section P.4.6. As described there, thermal analyses are performed to determine the temperature distributions in the 24PTH DSC for the following cases:

- Vacuum Drying Operations
- Blocked Vent Storage Transient
- On-Site Transfer at 0°F ambient
- On-Site Transfer at 100°F ambient
- On-Site Transfer at 117°F ambient
- On-Site Transfer Accident
- HSM-H and HSM Model 102 Storage at -40°F ambient
- HSM-H and HSM Model 102 Storage at 0°F ambient
- HSM-H and HSM Model 102 Storage at 100°F ambient
- HSM-H and HSM Model 102 Storage at 117°F ambient

The hand calculations performed to evaluate the effects of differential thermal expansion are based on temperatures for the vacuum drying case. This case is selected because it maximizes the temperature differential between the DSC shell and the internal basket assembly components.

Radial Expansion

In the radial direction, the thermal expansion of the neutron absorbing/ aluminum heat transfer materials are evaluated to ensure no interferences with the R90 transition rails. This evaluation is done using the average temperatures of the aluminum/neutron absorbing plates along its radial length, as follows:

$$\begin{aligned}\Delta L_{al/Neu} &= \alpha_{al} L_{plate} \Delta T \\ &= \left(1.38\, x\, 10^{-5} {}^{\circ}F^{-1}\right)\left(60.5\, in\right)\left(445^{\circ}F - 70^{\circ}F\right) \\ &= 0.313\, in\end{aligned}$$

The required clearance is 0.313 inch. This is conservatively compared with the cold gap of 0.40 inch provided in the design and is therefore adequate.

Axial Expansion

For the vacuum drying condition, axial thermal expansion of the basket components is calculated below.

24PTH Axial Thermal Expansion, Vacuum Drying

Component	T_{max} (°F)	α_{avg} (°F^{-1})	L (in)	ΔL (in)
Tube (24PTH-S/-L)	580	9.8E-06	174.6	0.873
Tube (24PTH-S-LC)	573	9.8E-06	172.3	0.849
Aluminum/ Poison Plates (24PTH-S/-L)	572	1.41E-05	20.8	0.147
Aluminum/ Poison Plates (24PTH-S-LC)	567	1.41E-05	21.3	0.149
R45 Type 304 T. Rails (24PTH-S/-L)	580	9.8E-06	174.6	0.873
R45 Type 304 T. Rails (24PTH-S-LC)	573	9.8E-06	172.3	0.849
R90 6061 (Al.) T. Rails (24PTH-S/-L)	572	1.41E-05	173.6	1.229
R90 6061 (Al.) T. Rails (24PTH-S-LC)	567	1.41E-05	171.3	1.200
DSC Cavity (24PTH-S/-L)	215	9.0E-06	175.6	0.228
DSC Cavity (24PTH-S-LC)	215	9.0E-06	173.3	0.225

Relative expansion is determined by comparing values calculated above. For example, the "worst case" required clearances between the end of the DSC cavity and the structural parts of the basket assembly can be determined by comparing the cavity expansion to the expansion of the basket assembly calculated using the maximum component temperatures:

Relative Axial Thermal Growth (Vacuum Drying)	Component Growth (in)	Cavity Growth (in)	Required Clearance[1] (in)
Fuel Support Tube Structure to Cavity	0.873/0.849	0.228/0.225	0.65/0.62
R45 Steel Transition Rails to Cavity	0.873/0.849	0.228/0.225	0.65/0.62
R90 6061 Transition Rails to Cavity	1.229/1.200	0.228/0.225	1.00/0.98

Notes: 1. The actual clearances provided in the design are 1.0 in. for the tube structure and R45 rails (steel components) and 2.0 in. for the R90 rails (aluminum components). Therefore, cavity clearance is adequate for thermal expansion.

The thermal expansion of the aluminum/poison plate segments, which are captured in between the steel straps (2.375 in. wide), along the axial length of the basket is calculated below:

24PTH Axial Thermal Expansion, Vacuum Drying

Component	T_{max} (°F)	α_{avg} (°F^{-1})	L[1] (in)	ΔL (in)
Tube (24PTH-S/-L)	580	9.8E-06	20.875	0.104
Tube (24PTH-S-LC)	573	9.8E-06	21.395	0.105
Aluminum/ Poison Plates (24PTH-S/-L)	572	1.41E-05	20.8	0.147
Aluminum/ Poison Plates (24PTH-S-LC)	567	1.41E-05	21.3	0.149

Notes: 1 For the tube L is the clear distance between steel straps. For the aluminum/poison plates, L is the height of the plate.

$$\begin{aligned}\Delta L_{Tube} &= \alpha_{steel} L_{segment} \Delta T \\ &= \left(9.80 \, x \, 10^{-6} {}^{\circ}F^{-1}\right)\left(20.875 \, in\right)\left(580^{\circ}F - 70^{\circ}F\right) \\ &= 0.104 \, in\end{aligned}$$

The differential thermal expansion or required clearance is 0.147–0.104 = 0.04 inches, which is less than the 0.1 in. gap provided in the design.

P.3.4.4.3 Thermal Stress Calculations

The thermal stress calculations for the 24PTH DSC basket assembly is presented in this section. A summary of the thermal stress evaluations for HSM-H, and OS197/OS197H/OS197FC TCs are also presented in this section. The thermal stress evaluations for the 24PTH DSC shell assemblies, the HSM-H, and the TCs are provided in Section P.3.6 (for normal and off-normal conditions) and in Section P.3.7 for accident conditions. The thermal stresses for the Standardized TC and HSM Model 102 are not changed from those reported in Chapter 8 because they are based on a maximum heat load of 24 kW which is the same as the heat load for the 24PTH-S-LC DSC.

Thermal stresses are considered separately and in combination with other loads. Only the separate thermal stresses are presented here. Thermal stresses in combination with other loads are addressed in the appropriate sections.

P.3.4.4.3.1 24PTH Basket Assembly Thermal Stress Calculations

As noted in P.3.4.4.2, clearances are provided such that there is free thermal expansion in the axial and radial directions in the basket components.

Thermal stresses in the basket assembly are evaluated using the LS DYNA [3.18] finite element model described in P.3.6.1.3. As described in P.3.6.1.3.1, the LS-DYNA model includes the fuel compartment tube structure, R90 aluminum transition rails, R45 steel transition rails, the DSC shell, and the TC ID and TC rails. For the evaluation of thermal loads, all contact elements are active and the effects of the TC and TC rails are included.

A bounding thermal profile is used for the thermal stress analysis. The bounding profile has a maximum temperature at the center of the basket of 750°F and a minimum temperature at the DSC shell of 500°F, with the temperature at other points in the basket varying linearly with radius. The thermal profile is shown in Figure P.3.4-2. The maximum temperature obtained from the thermal analyses documented in Section P.4 is 734°F at the center and 550°F at the DSC shell. Thus, the profile used in the thermal stress analysis is bounding for both, maximum temperature and maximum gradient.

Maximum thermal stresses are summarized in Table P.3.4-1 for the main basket components. As shown by the table, thermal stresses in the 24PTH basket are low.

P.3.4.4.3.2 HSM-H Thermal Stress Calculations

The thermal stress evaluations of the HSM-H are described in Section P.3.6 for normal and off-normal conditions and P.3.7 for accident conditions. A summary of the forces and moments in the concrete components due to different thermal load cases are summarized in Table P.3.4-2.

P.3.4.4.3.3 OS197/OS197H/OS197FC Thermal Stress Calculations

The OS197/OS197H OS197FC is used for transfer of a 24PTH DSC for heat loads of up to 31.2 kW with basket type 1. For DSCs with basket type 1 with heat load above 31.2 kW or DSCs with basket type 2, use of the OS197FC TC is required. The only difference between the OS197/OS197H TC and the OS197FC TC is the TC top lid vents (which allow for air circulation) provided in the OS197FC TC. The thermal analysis of the TC is based on the bounding temperature profiles for 31.2 kW (steady state with and without air circulation) and 40.8 kW (with air circulation). Therefore, the thermal stress analyses are applicable to the OS197/OS197H and OS197FC TCs.

The OS197FC thermal stress calculations are described in Section P.3.6.1.5.

Table P.3.4-1
Summary of Thermal Stress Results - 24PTH Basket

Basket Component	Maximum Stress Intensities (ksi)
Tube Structure	7.85
R45 Transition Rail	8.72
R90 Transition Rail	1.44

Table P.3.4-2
Summary of Thermal Forces and Moments in the HSM-H Concrete Components

Thermal Case	Concrete Component	Forces/Moments			
		Shear, V_{o1} (1) (kips/ft)	Shear, V_{o2} (1) (kips/ft)	Moment, M_1 (2) (kip-in/ft)	Moment, M_2 (2) (kip-in/ft)
Normal Thermal (TN)	Rear Wall	4	6	47	60
	Side Wall	7	6	46	32
	Front Wall	16	23	1318	596
	Roof	3	5	111	234
Off-Normal Thermal (TO)	Rear Wall	4	5	51	39
	Side Wall	6	6	45	29
	Front Wall	16	23	1315	506
	Roof	3	5	93	233
Accident Thermal (TA)	Rear Wall	7	15	107	202
	Side Wall	92	32	184	340
	Front Wall	32	29	1353	2539
	Roof	11	20	349	830

Notes:

(1) V_{o1} and V_{o2} are out of plane shears.

(2) M_1 and M_2 are out of plane moments.

POTENTIAL VERSUS pH DIAGRAM FOR ALUMINUM-WATER SYSTEM

At 25°C (77°F):

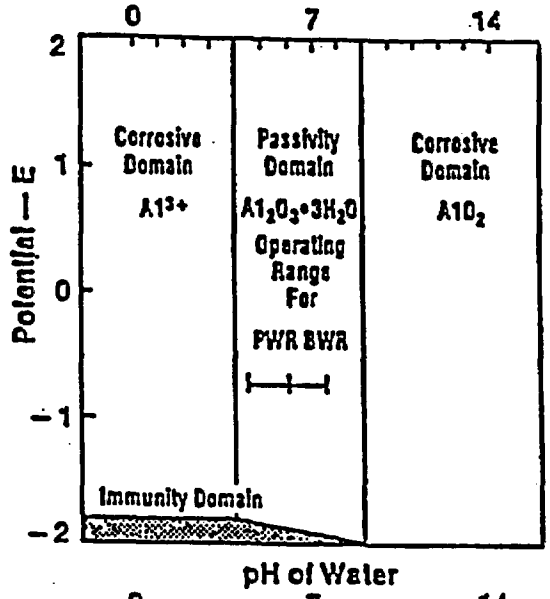

At 60°C (140°F):

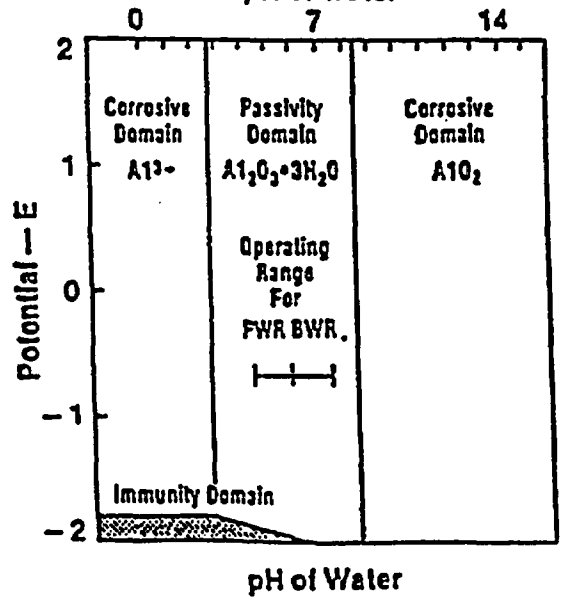

Figure P.3.4-1
Potential Versus pH Diagram for Aluminum-Water System

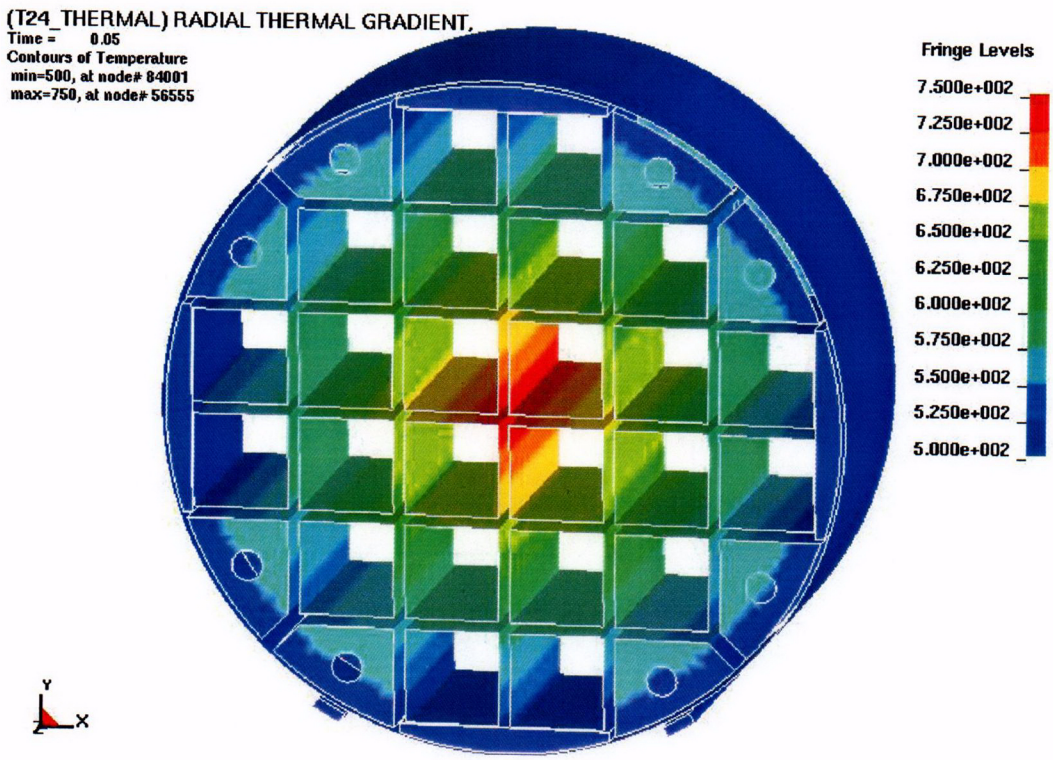

Figure P.3.4-2
Applied Bounding Temperatures for Thermal Stress Analysis of 24PTH DSC

P.3.5 Fuel Rods

No change to the evaluation presented in the FSAR.

P.3.6 Structural Analysis (Normal and Off-Normal Operations)

In accordance with NRC Regulatory Guide 3.48 [3.12], the design events identified by ANSI/ANS 57.9-1984, [3.14] form the basis for the accident analyses performed for the standardized NUHOMS® System. Four categories of design events are defined. Design event Types I and II cover normal and off-normal events and are addressed in Section 8.1. Design event Types III and IV cover a range of postulated accident events and are addressed in Section 8.2. The purpose of this section is to present the structural analyses for normal and off-normal operating conditions for the NUHOMS®-24PTH system using a format similar to the one used in Section 8.1 for analyzing the NUHOMS®-24P systems.

The evaluations in Chapter 8.1 for the HSM Model 102 are not changed because the only 24PTH DSC that is allowed for storage in the HSM Model 102 is the 24PTH-S-LC DSC which has a maximum heat load that is the same as the 24P (24 kW). In addition, the HSM Model 102 has been evaluated for DSC weights that bound the weight of the 24PTH DSC.

The TC evaluations for mechanical loads in Chapter 8.1 are not changed, with the exception of the effect of the vent cutouts in the OS197FC TC top lid stresses, which are addressed in Section P.3.6.1.5. The TC thermal stress analysis for heat loads above 24 kW are also presented in Section P.3.6.1.5.

The results for the Standardized TC presented in Section 8.1 are not changed because the only 24PTH DSC allowed in the Standardized TC is the 24PTH-S-L DSC which has a maximum heat load of 24 kW (same as the 24P DSC evaluated in Section 8.1).

P.3.6.1 Normal Operation Structural Analysis

Table P.3.6-1 shows the normal operating loads for which the NUHOMS® System components are designed. The table also lists the individual NUHOMS® components which are affected by each loading. The magnitude and characteristics of each load are described in Section P.3.6.1.1.

The method of analysis and the analytical results for each load are described in Sections P.3.6.1.2 through P.3.6.1.5.

P.3.6.1.1 Normal Operating Loads

The normal operating loads for the NUHOMS® System components are:

- Dead Weight Loads
- Design Basis Internal and External Pressure Loads
- Design Basis Thermal Loads
- Operational Handling Loads
- Design Basis Live Loads

These loads are described in detail in the following paragraphs.

(A) Dead Weight Loads

Table P.3.2-1 shows the weights of various components of the NUHOMS®-24PTH system. The dead weight of the component materials is determined based on nominal component dimensions.

(B) Design Basis Internal and External Pressure

Internal pressures for the 24PTH DSC are developed as described in Chapter P.4.6. The structural analyses are performed for bounding internal pressures of 15 psig and 20 psig for normal and off-normal conditions, respectively. Accident pressures are discussed in Section P.3.7.

External pressures include hydrostatic pressures during fuel loading and pressures due to vacuum drying operations. Accident external pressure case (flood) is discussed in Section P.3.7.

(C) Design Basis Thermal Loads

The normal condition temperature distributions for the 24PTH DSC, HSM-H, and OS197/OS197H/OS197FC TC are presented in Section P.4.6, P.4.4, and P.4.5, respectively. Stress analysis for normal thermal loads for the DSC shell assembly are provided in Section P.3.6.1.2(C), Section P.3.4.4.3.1 for the basket assembly, P.3.6.1.4(C) for the HSM-H, and P.3.6.1.5 for the OS197/OS197H/OS197FC TC.

(D) Operational Handling Loads

There are two categories of handling loads: (1) inertial loads associated with on-site handling and transporting the DSC between the fuel handling/loading area and the HSM-H, and (2) loads associated with loading the DSC into, and unloading the DSC from, the HSM-H. These handling loads are described in Section 8.1.1.1C.

Based on the surface finish and the contact angle of the DSC support rails inside the HSM-H, a bounding coefficient of friction is conservatively assumed to be 0.25. Therefore, the nominal ram load required to slide the DSC under normal operating conditions is approximately 27,550 lbs., calculated as follows:

$$P = \frac{0.25W}{Cos\theta} = 0.29W \qquad = 0.29\ (95{,}000\ \text{lbs.}) \approx 27{,}550\ \text{lbs.}$$

Where:

P = Push/Pull Load,

W = Loaded 24PTH DSC Weight ≈ 95,000 lbs. (Conservatively used), and

θ = 30 degrees, Angle of the Canister Support Rail.

However, the DSC bottom cover plate and grapple ring assembly are designed to withstand a normal operating insertion force equal to 80,000 pounds and a normal operating extraction force equal to 60,000 pounds. To insure retrievability for a postulated jammed DSC condition, the ram is sized with a capacity for a load of 80,000 pounds, as described in Section 8.1.2. These loads bound the friction force postulated to be developed between the sliding surfaces of the DSC and TC during worst case off-normal conditions.

(E) Design Basis Live Loads

A live load of 200 pounds per square foot is conservatively selected to envelope all postulated live loads acting on the HSM-H, including the effects of snow and ice. Live loads which may act on the TC are negligible.

P.3.6.1.2 Dry Shielded Canister Analysis

The standardized NUHOMS®-24PTH DSC shell assembly is analyzed for the normal, off-normal and postulated accident load conditions using ANSYS [3.11] finite element models as follows:

For the analysis of the 24PTH-S/-L DSC configurations, two basic ANSYS models are developed: a top-end half-length model of the DSC shell assembly and a bottom-end half-length model of the DSC shell assembly. A 90° (one quarter) cross sectional segment of the DSC is used to analyze axisymmetric loads, and a 180° (one-half) cross sectional segment is used to analyze non-axisymmetric loads. These models are similar to the models used for the 24P analysis as described in Section 8.1.1.2. Typical models of the top and bottom halves of the DSC shell assembly are shown in Figure P.3.6-1 and Figure P.3.6-2, respectively. A partial view of the 180° (one-half) model showing the bottom end plates and grapple assembly is shown in Figure P.3.6-3.

For the analysis of the 24PTH-S-LC DSC shell assembly, three ANSYS finite element models are used:

- Axisymmetric model of the DSC shell assembly,
- A three-dimensional top-end model with top shield plug assembly, outer top cover plate, and part of the DSC shell, and
- A three-dimensional bottom-end model with bottom shield plug assembly, outer bottom cover plate, grapple assembly components, and part of the-DSC shell.

The axisymmetric model is shown in Figure P.3.6-4. The axisymmetric model is a complete model of the 24PTH-S-LC DSC shell assembly which includes both top and bottom shield plug assemblies, cover plates, and the DSC shell. The model is used to analyze axisymmetric loads. The model consists of ANSYS PLANE 42 elements. The interaction between adjacent surfaces of the top cover plate, bottom cover plate, and lead shielding are modeled using ANSYS CONTACT 48 elements. This model is used for analysis of vertical dead weight load, top/bottom end drop loads, and internal/external pressure loads.

The 3D top and bottom end models are shown in Figure P.3.6-5. The three-dimensional top and bottom end models are 180° (half-symmetric) representations, and are used to analyze non-axisymmetric loads. These models consist of eight node 3D solid elements (ANSYS SOLID 45). Each node has three translational degrees of freedom. The adjacent plate surfaces of the top and bottom end components are modeled using nonlinear contact elements (ANSYS CONTACT 49). The contact elements allow the transfer of compressive loads only, allowing interacting surfaces to slide freely with respect to one another. These models are used for the analysis of thermal load, side drop load, grapple pull/push loads, and axial seismic restraint load.

The 24PTH DSC models described above are used to evaluate stresses in the NUHOMS®-24PTH DSC due to:

- Dead Weight
- Design Basis Normal Operating Internal and External Pressure Loads
- Normal Operating Thermal Loads
- Normal Operation Handling Loads

The methodology used to evaluate the effects of these normal loads is addressed in the following paragraphs. Table P.3.6-2 and Table P.3.6-3 summarize the resulting stresses for normal operating loads for the 24PTH-S/-L DSC and 24PTH-S-LC DSC , respectively.

Dead load analyses of the DSC are performed for both vertical and horizontal positions of the DSC. In the vertical position, the DSC shell supports its own empty weight and the entire weight of the top end components. When inside the TC, the weight of the fuel and the bottom end components is transferred to the TC by bearing through the inner bottom cover plate, shield plug and outer bottom cover plate. When in the horizontal position, the DSC is in the TC or in the HSM Model 102/HSM-H. In this position, the DSC shell assembly end components and the internal basket assembly bear against the DSC shell. The DSC shell assembly is supported by two rails located at ± 18.5° when in the TC and at ± 30° when in the HSM Model 102/HSM-H. This is shown schematically in Figure 8.1-13.

(A) <u>DSC Dead Load Analysis</u>

Dead load stresses are obtained from static analyses performed using the ANSYS finite element models described above. The ANSYS models are analyzed for a 1g load, using the appropriate finite element model and boundary conditions, for horizontal and vertical configurations. For the horizontal dead load analyses, the DSC is conservatively assumed to be supported on one rail. In addition, the fuel-loaded portions of the basket assembly bear on the inner surface of the DSC shell. DSC shell stresses in the region of the basket assembly resulting from the bearing load and from local deformations at the cask rails are evaluated using the model described in Section P.3.6.1.3. The DSC shell assembly components are evaluated for primary membrane and membrane plus bending stress and for primary plus secondary stress range. Enveloping maximum stress intensities are summarized in Table P.3.6-2 and Table P.3.6-3 for the NUHOMS®-24PTH-S/-L DSC and 24PTH-S-LC DSC, respectively.

(B) DSC Normal Operating Design Basis Pressure Analysis

The NUHOMS®-24PTH DSC shell assembly analytical models shown in Figure P.3.6-1 and Figure P.3.6-2 and Figure P.3.6-4 are used for the normal operating design pressure analyses. The calculated maximum internal pressures for the NUHOMS®-24PTH DSC are shown in Section P.4.6. The design internal pressure of 20 psig, which bounds the normal and off-normal internal pressure calculated in Section P.4, is used. The resulting maximum stress intensities are reported in Table P.3.6-2 (24PTH-S/-L DSCs) and Table P.3.6-3 (24PTH-S-LC DSC).

(C) DSC Normal Operating Thermal Stress Analysis

The thermal analysis of the DSC for the various conditions, as presented in Section P.4.6, provides temperature distributions for the DSC shell, along with maximum and minimum DSC component temperatures. These temperature distributions are imposed onto the DSC shell assembly ANSYS stress analysis models for thermal stress evaluation. Corresponding component temperatures are used to determine material properties and allowable stress values used in the stress analyses. DSC shell assembly materials are all Type 304 stainless steel with the exception of an option to fabricate the shield plugs of A36 carbon steel for the 24PTH-S/-L DSCs. Because these dissimilar materials are not mechanically fastened, allowing free differential thermal growth, the thermal stresses in the DSC shell components are due entirely to thermal gradients. For the 24PTH-S-LC DSC, the top and bottom shield plugs are made from lead. The lead plugs are also not mechanically fastened to the lead plug forgings, allowing for free differential thermal growth.

The results of the thermal analysis show that for the range of normal operating ambient temperature conditions, the thermal gradients are primarily along the axial and tangential directions of the DSC and that no significant thermal gradients exist through the wall of the DSC. Stresses resulting from thermal gradients are classified as secondary stresses and are evaluated for Service Level A and B conditions. Maximum stress intensities resulting from the thermal stress analyses are summarized in Table P.3.6-2 for the NUHOMS®-24PTH-S/-L DSCs and Table P.3.6-3 for the 24PTH-S-LC DSC, respectively.

(D) DSC Operational Handling Load Analysis

To load the DSC into the HSM Model 102/HSM-H, the DSC is pushed out of the TC using a hydraulic ram. The applied force from the hydraulic ram, specified in Section P.3.6.1.1(D), is applied to the center of the DSC outer bottom cover plate for the 24PTH-S/-L DSCs and to the center of the inner grapple ring support for the 24PTH-S-LC. The ANSYS finite element models shown in Figure P.3.6-3 and Figure P.3.6-5 (bottom end) are used to calculate the stresses in the DSC shell assembly.

To unload the DSC from the HSM Model 102/HSM-H, the DSC is pulled using grapples which fit into the grapple ring. For analysis of grapple pull loading, the 180° ANSYS finite element model of the bottom half DSC assembly is used, as shown in Figure P.3.6-3 for the 24PTH-S/-L DSCs and in Figure P.3.6-5 for the 24PTH-S-LC DSC.

The controlling stresses from these analyses are tabulated in Table P.3.6-2 and Table P.3.6-3 for the 24PTH-S/-L DSC and the 24PTH-S-LC DSC, respectively.

(E) Evaluation of the Results

The maximum calculated DSC shell stresses induced by normal operating load conditions are shown in Table P.3.6-2 for the 24PTH-S/-L DSCs and Table P.3.6-3 for 24PTH-S-LC DSC. The calculated stresses for each load case are combined in accordance with the load combinations presented in Table P.2-14. The resulting stresses for the controlling load combinations are reported in Section P.3.7.11 along with the ASME Code allowable stresses.

P.3.6.1.3 NUHOMS®-24PTH Basket Structural Analysis

Stresses in the basket assembly are determined using a combination of hand calculations and three dimensional LS DYNA finite element models. The following loads are addressed:

- Dead Weight
- Thermal Stresses
- Handling/Transfer Loads
- Accident Drops
- Seismic Loads

Thermal loads for the basket are addressed in Section P.3.4.4. The drop loads are Level D loads and are addressed in Section P.3.7. The seismic loads are Level C loads, which are enveloped by the on-site handling loads as described in Section P.3.6.1.3.2.

P.3.6.1.3.1 LS-DYNA Finite Element Model Analysis

(A) LS DYNA Finite Element Model Description

A finite element model of the basket assembly is developed using the LS-DYNA computer program [3.18]. LS-DYNA is used for the analysis of the 24PTH basket because of its robust contact algorithms which are able to model contact between the different components of the basket assembly.

The LS DYNA model of the 24PTH basket assembly is shown in Figure P.3.6-6. The model uses fully integrated shell elements (with five integration points through the thickness) to represent the fuel compartment tubes, the steel insert plates (straps) that are welded to the tubes, and the R45 transition rails. Fully integrated solid elements are used for the aluminum R90 transition rails. The model is a 24-inch long section of the basket assembly. This span corresponds to the 24" periodicity of the basket assembly steel insert plates (straps) and strap-to-fuel compartment tube welds, and to twice (12") the periodicity of the stiffener plates in the R45 transition rails. The steel insert (straps) plates, steel insert plates-to-tube welds, and a full-thickness R45 transition rail stiffener plate are modeled at Z=0.0". The model is extended half way to the next strap plate/weld location to Z=+12" and Z=-12". Half-thickness R45 stiffeners are included at the ends of the model (Z=±12"). The model includes a segment of the DSC shell,

which is also modeled with fully integrated shell elements. The steel insert plates-to-tube welds are modeled with beam elements. Symmetry boundary conditions are applied at the ±Z faces of the model. At the –Z face the model is unrestrained to permit axial thermal expansion.

The TC shell and TC rails, which are extremely rigid relative to the other parts of the structure, are included as rigid bodies and are fixed. Therefore, the TC shell is modeled with only one through-thickness element. Table P.3.6-4 lists the structural parts included in the model.

The finite element model showing the geometry of the basket model is shown in Figure P.3.6-7. Figure P.3.6-8 shows the fuel compartment tubes, the R45 transition rails, and the modeled steel insert plates (straps).

Contact is specified between all adjacent surfaces throughout the model. Contact elements are included between the following interfacing components:

- Fuel compartment tubes to adjacent tubes
- Fuel compartment tubes to basket straps
- Fuel compartment tubes to transition rails,
- Transition rails to DSC shell ID, and
- DSC shell OD to TC ID and TC rails.

The heat conducting aluminum and neutron absorbing poison plates are not explicitly modeled (their weight is accounted for by adjusting the density of the materials used for the fuel compartment tubes and R45 transition rails). The thicknesses of the shell elements for the fuel compartment tubes and the R45 transition rails are adjusted to properly account for the contact that exists between these adjacent surfaces. Generally, contact is modeled using the LS-DYNA surface-to-surface contact algorithm, except for the contact between the edges of the R45 transition rail plates that interface with the DSC shell (including the stiffener plates), which is modeled using the nodes-to-surface contact algorithm.

Inertial loads are applied to the structure by including the appropriate weight density of the materials and applying accelerations. Because the aluminum/neutron absorbing plates (captured in between the fuel compartment tubes), and the heat conductive aluminum inserts (captured in between the stiffener plates in the R45 transition rails), are not explicitly modeled, equivalent densities are determined for these components to provide the analysis with the appropriate mass of the system. Fuel loads are applied using pressure loads on the fuel compartment tube elements. Thermal effects are included by applying temperatures corresponding to the bounding temperature profile shown in Figure P.3.4-2.

For the normal condition stress analyses, 1g loads are applied and deadweight stresses determined. These deadweight stresses are classified as primary membrane and membrane plus bending stresses. Separate analyses were performed to determine thermal stress, as discussed in Section P.3.4.4.3. The thermal plus deadweight stresses are classified as primary plus secondary. Tables of the temperature-dependent material properties (e.g., S_y versus temperature) are

included in the LS-DYNA model, such that the appropriate properties are applied at each point in the structure.

Stress intensities are calculated for all the elements in the model. Maximum stress intensities are compared with the appropriate allowable stress values and are reported in this section.

(B) Material Properties

The material properties used in the LS-DYNA stress analyses are summarized in Table P.3.6-5. With the exception of the solid aluminum transition rails, properties for all materials are directly from the ASME Code. Properties for the aluminum rails are described in Section P.3.3.1.

P.3.6.1.3.2 Normal Condition Loading

Postulated loads on the 24PTH basket structure for non-accident conditions are described in the following sections. The loads and load combinations for the 24PTH basket structure are simplified by consideration that the basket is unaffected by either pressure loads or HSM Model 102/HSM-H insertion/retrieval loads.

(A) Thermal

The analysis of the 24PTH basket for thermal loads is described in P.3.4.4. As shown in Section P.3.4.4.3.1, thermal stresses are small.

(B) Deadweight

Deadweight load conditions include: (1) vertical deadweight during fuel loading operations, (2) horizontal deadweight in the TC with support through the cask rails at ±18.5°, and (3) horizontal deadweight in the HSM Model 102/HSM-H with support through the HSM Model 102/HSM-H rails at ±30°.

Under axial loads, the fuel assemblies and fuel compartment tubes are supported by the bottom of the TC. Thus, the fuel assemblies react directly against the bottom of the DSC/TC and do not load the basket structure. Stresses under axial loading are from self weight of the basket structure. Maximum axial compressive stresses occur at the supported end of the basket.

Vertical deadweight was evaluated using hand calculations and by comparing the calculated axial compression stresses to stability allowables developed considering both stability criteria and the general membrane criteria (P_m) from Subsection NG (see P.2.2.5.1). The calculated stresses for the vertical deadweight condition are also applied to the vacuum drying case.

Calculated stresses are listed in Table P.3.6-6 along with the appropriate compressive allowables. The results from this table show that the stresses for this load condition are small.

Horizontal deadweight cases were evaluated using the LS-DYNA model described in P.3.6.1.3.1. As appropriate the elements representing the support rails were located at either ±18.5° or ±30° from bottom center for support by the TC or HSM Model 102/HSM-H, respectively. Thus, the following analysis cases were evaluated:

1. 24PTH DSC supported at ±18.5° (TC Condition)

2. 24PTH DSC supported at ±30° (HSM Model 102/HSM-H Condition)

Primary plus secondary stresses were evaluated by combining deadweight stresses with the thermal stresses resulting from the bounding temperature distribution. Conservatively, the maximum deadweight stress intensities are combined with the maximum thermal stress intensities by absolute summation. Maximum stresses for basket steel components and R90 aluminum transition rails are summarized in Table P.3.6-7 along with a comparison to Level A allowables from Subsection NG.

(C) Vacuum Drying

As described above, the axial compression stresses under the vacuum drying condition are equal to the axial compression stresses under vertical deadweight.

As described in P.3.4.4.3.1, maximum stresses from the vacuum drying temperature distribution are bounded by the temperature distribution used in the structural evaluations and the results are listed in Table P.3.4-1. These thermal stresses are classified as secondary by the Code and, as shown by the table, these stresses are small.

(D) Handling/On-Site Transfer Loads

These cases include the loads associated with loading (and unloading) the 24PTH DSC into HSM Model 102/HSM-H and the inertial loads associated with on-site handling. The insertion/retrieval loads do not directly impact the 24PTH basket assembly and do not require additional consideration. The inertia loads to be considered are:

- DW + 1g Axial
- DW + 1g Transverse.
- DW + 1g Vertical
- DW + 0.5g Axial + 0.5 Transverse + 0.5 Vertical

These loads are enveloped by a 2g resultant acceleration applied in the most critical orientation.

The 2.0g resultant axial load is evaluated using hand calculations and the same methodology used for the vertical deadweight analyses. Maximum compressive stresses resulting from this load case are listed in Table P.3.6-6 along with a comparison to the axial stability criteria described in P.2.2.5.1.2.

Loads transverse to the axis of the DSC are evaluated using the LS-DYNA models described in P.3.6.1.3.1. Primary stresses are based on twice the horizontal deadweight stresses. Conservatively, in the evaluation of primary plus secondary stresses, the maximum handling stress intensities are combined with the maximum thermal stress intensities by absolute

summation. Enveloping 24PTH basket stresses are summarized in Table P.3.6-7 along with a comparison to Service Level A allowables.

(E) Evaluation of Results

Normal and off-normal conditions stresses are summarized in Table P.3.6-6 and Table P.3.6-7 for basket stainless steel and aluminum components. LS-DYNA plots showing typical analysis results for the 24PTH basket are provided in Figure P.3.6-9 and Figure P.3.6-10 for deadweight and thermal stresses, respectively. The results summarized in Table P.3.6-6 and Table P.3.6-7, show that the basket stress criteria is met.

Loads on the welds connecting the steel insert paltes (straps) and the fuel compartment tubes are evaluated using the beam element forces obtained from the LS-DYNA analysis. On each face of the fuel tubes, two welds (beams) were modeled between the tube and the adjacent basket straps(s). The Resultant loads on the face of each fuel compartment tube are determined as follows:

$$F_{\text{Resultant}} = \sqrt{\left(F_{Ax}^{1} + F_{Ax}^{2}\right)^2 + \left(F_{V1}^{1} + F_{V1}^{2}\right)^2 + \left(F_{V2}^{1} + F_{V2}^{2}\right)^2}$$

Where: F_{Ax}^{i} = Axial force at weld element 'i'. Compressive forces are set to zero (0 lb) since compression loads will be transmitted by bearing through the parts and will not stress the welds.

F_{V1}^{i} = Shear force (Direction 1) at weld element 'i'.

F_{V2}^{i} = Shear force (Direction 2) at weld element 'i'.

For each of the stress analyses, maximum weld loads are determined for each side of each tube. The maximum normal condition loads are listed in Table P.3.6-8.

Within the basket fuel compartment tube structure are plates of Type 1100 aluminum and neutron absorbing materials, which perform heat transfer and criticality functions. As shown in Section P.4, the maximum short-term basket temperature for normal and off-normal conditions is 683°F, which is well below the melting point of the aluminum plates (approximately 1200°F). As discussed in Section P.3.4, adequate clearance is provided for thermal expansion so that thermal stresses in the aluminum plates are negligible. These plates are supported by the steel insert plates (straps) and are sandwiched between the steel fuel compartment tubes. This ensures that the aluminum and neutron absorbing plates remain in position to perform their heat transfer and criticality functions.

P.3.6.1.4 NUHOMS® HSM-H Structural Analysis

The reinforced concrete and the support steel structure of the HSM-H are analyzed for the normal, off-normal, and postulated accident conditions using finite element models described in Section P.3.7.11.6. These models are used to evaluate concrete and support structure forces and

moments due to dead load, live load, normal thermal loads, and normal handling loads. The methodology used to evaluate the effects of these normal loads is addressed in the following paragraphs.

(A) HSM-H Dead Load Analysis

Dead loads are applied to the analytical model by application of 1.05g where g is the gravitational acceleration in the vertical direction (386.4 in/sec^2). The 5% variation in the dead load is in accordance with ANSI/ANS 57.9 [3.14].

(B) HSM-H Live load Analysis

Live load analysis is performed by applying 200 psf pressure on the roof and the DSC weight as a distributed load on the support structure. The normal handling load of 80 kips during DSC insertion and 60 kips during DSC retrieval is included as a live load for the concrete component evaluation.

(C) HSM-H Normal Operating Thermal Stress Analysis

Normal operating thermal stress analysis of the concrete and steel support structure is performed for the enveloping thermal load case which is 40.8 kW heat load with ambient temperature of 100°F. An additional thermal load case with -40°F ambient and 40.8 kW heat load is also considered as a bounding case for the end module in an array of HSM-H. The results of thermal analysis are provided in Table P.3.4-2.

(D) HSM-H Operational Handling Load Analysis

The operation handling loads of 80 kips during DSC insertion and 60 kips during DSC retrieval are applied to the rail support structure in the axial direction. In addition, the DSC weight is applied as a distributed load on both rails of the HSM-H.

The normal operating handling loads are considered as live loads for the design of the concrete components.

(E) HSM-H Design Basis Wind Load Analysis

The DSC support structure and DSC inside the HSM-H are not affected by wind load. The concrete structure forces and moments due to design basis wind load are bounded by the result of tornado generated wind load discussed in Section P.2.2.5.2.3(B). Therefore, no separate analysis is performed for this case.

The results of the HSM-H concrete components normal load analysis are presented in Table P.3.6-10.

P.3.6.1.5 OS197/OS197H/OS197FC On-Site TC Analysis

This section documents the stress analysis performed for the OS197/OS197H/OS197FC TC. The OS197FC is the same as the OS197/OS197H TC with the exception of the cask top lid, which is modified to add vents around the perimeter of the lid. The added vents permit passage of cooling airflow, if required, that is circulated through the ram access opening at the bottom of the cask, circulates through the annulus between the cask and the DSC, and exits through the top lid vents. Thus, the evaluations in this section address the effect of the vent cutouts on the lid stresses. This evaluation is applicable only to the OS197FC TC.

This section also addresses the changes in cask maximum temperatures and temperature distribution profiles that result from the higher heat load capability of the TC. This thermal stress evaluation is applicable to the OS197/OS197H/OS197FC TCs. In these evaluations, all other stresses (due to mechanical loads), as reported in Section 8.0, do not change. However, the allowable stresses are adjusted to reflect the changed (higher) temperatures, and are reported in this section.

Modified Lid Evaluation

To address the effect of the lid vent cutouts on the lid stresses, two separate finite element models (one with cutouts and one without cutouts) of a 1/32 (11.25°) segment of the lid are constructed using ANSYS [3.11]. Symmetry boundary conditions are applied on each side of the models. The two model configurations are shown in Figure P.3.6-11. Modeling details around the cut out location are shown in Figure P.3.6-12. Loads applied consist of 1g inward inertial load to represent the vertical deadweight case, and an outward 1g inertia load combined with a loaded DSC weight (applied as pressure load) to represent the handling load case. A comparison of the stress analysis results for the unmodified (no cutouts) and modified (with cutouts) lid are shown Table P.3.6-11. As shown by these results, the addition of the air vents cutouts has a minimal effect (less than 2.5% based on the controlling stress) on the lid stresses. This stress increase is accounted for in the stress combination results.

Thermal Stress Evaluation

The thermal analyses of the TC presented in Chapter P.4.5 provide the temperature and temperature distributions for the various ambient/operational conditions of transfer. For purposes of the thermal stress analysis, the TC is evaluated for the bounding temperature distributions resulting from transfer of a 24PTH DSC with heat loads of up to 40.8 kW with air circulation (if used), and 31.2 kW steady state analyses.

Figure P.3.6-13 shows a sample temperature distribution corresponding to the 40.8 kW case with use of air circulation by a fan. Figure P.3.6-14 shows a sample temperature distribution corresponding to a 31.2 kW heat load case steady state condition. To address the effect of these temperatures and associated temperature distributions throughout the cask, a 3-D ANSYS model of the TC, as shown in Figure P.3.6-15, is developed to perform the thermal stress analyses.

Thermal stress analyses are performed using the ANSYS model shown in Figure P.3.6-15 and applying the temperature profiles for TC from Section P.4.5. The maximum temperatures for each TC component associated with the analyzed cases are shown in the following table:

TC Cask Component	Maximum Temperature (°F)
Top Forging Inner Liner	297 384
Bottom Forging Structural Shell	259 329
NS-3 Cover Plate Ram Access Forging	217 201
Bottom End Cover Plate Top Lid	227 273
Lead (Shielding)	379

Table P.3.6-12 summarizes the enveloping thermal stresses for each TC component. These thermal stresses are combined with existing mechanical load stresses, based on the bounding stresses for the OS197H TC and are summarized in Table P.3.6-13. In Table P.3.6-13 the maximum primary plus secondary stresses are added by absolute sum, irrespective of location of the maximum stress, for each TC component. The combined stresses are compared to the allowable stress at temperature (400°F). The stresses listed in Table P.3.6-13 are applicable to regions away from the trunnions. Table P.3.6-14 summarizes the stresses at/or in the vicinity of the TC trunnions.

Payload Lift Evaluation

The evaluations for the OS197 and OS197H TCs are based on dry payloads of 90,000 lbs. and 116,000 lbs., respectively. The maximum total cask payload with a dry-loaded NUHOMS®-24PTH DSC is approximately 94,000 lbs. Therefore, a OS197FC TC that is based on the OS197H TC is acceptable with any NUHOMS®-24PTH DSC and a OS197FC TC that is based on the OS197 TC is acceptable with a NUHOMS®-24PTH DSC where the total TC payload is not more than 90,000 lbs.

P.3.6.2 Off-Normal Load Structural Analysis

Table P.3.6-9 shows the off-normal operating loads for which the NUHOMS® System components are designed. This section describes the design basis off-normal events for the NUHOMS® System and presents analyses which demonstrate the adequacy of the design safety features of a NUHOMS® System with the 24PTH DSC.

For an operating NUHOMS® System, off-normal events could occur during fuel loading, TC handling, trailer towing, canister transfer and other operational events. Two off-normal events are defined which bound the range of off-normal conditions. The limiting off-normal events are defined as a jammed DSC during loading or unloading from the HSM Model 102/HSM-H and the extreme ambient temperatures of -40°F (winter) and +117°F (summer). These events envelope the range of expected off-normal structural loads and temperatures acting on the DSC, TC, and HSM Model 102/HSM-H. These off-normal events are described in Section 8.1.2.

P.3.6.2.1 Jammed DSC during Transfer

The interfacing dimensions of the top end of the TC and the HSM Model 102/HSM-H access opening sleeve are specified so that docking of the TC with the HSM/HSM-H is not possible should gross misalignments between the TC and HSM Model 102/HSM-H exist. Furthermore, beveled lead-ins are provided on the ends of the TC, DSC, and DSC support rails to minimize the possibility of a jammed DSC during transfer. Nevertheless, it is postulated that if the TC is not accurately aligned with respect to the HSM Model 102/HSM-H, the DSC binds or becomes jammed during transfer operations.

The interfacing dimensions and design features of the HSM Model 102/HSM-H access opening, DSC Support Structure and the OS197 FC, as described in Section 8.1.2, remain unchanged. The insertion and extraction forces applied on the NUHOMS®-24PTH during loading and unloading operations are the same as those specified for the NUHOMS®-24P system. The discussion in Section 8.1.2.1B applies to the 24PTH DSC. However, the NUHOMS®-24PTH DSC shell thickness is 0.5 inches (compared to 0.625 inches for the NUHOMS®-24P DSC shell) and the outside radius is 33.595 inches. Hence, the NUHOMS®-24PTH DSC shell stresses, based on a force of 80 kips and a moment arm of 33.595 inches are calculated below.

Axial Sticking of the DSC

$$S_{mx} = \frac{M}{S}$$ (From Equation 8.1-9, Section 8.1.2.1)

Where:

M = 80 x 33.595 = 2690 in.-kip, Bending moment

S = 1734 in.^{3}, DSC section modulus

Therefore:

S_{mx} = 1.55 ksi

This magnitude of stress is negligible when compared to the allowable membrane stress of 17.5 ksi and is bounded by stresses for other handling loads as shown Table P.3.6-2 (24PTH-S/-L DSCs) or Table P.3.6-3 (24PTH-S-LC DSC).

Binding of the DSC

As discussed in Section 8.1.2.1C, if axial alignment within system operating specifications is not achieved, it may be possible to pinch the DSC shell as shown in Figure 8.1-32. From Section 8.1.2.1C, the pinching force is taken as the product of the maximum ram loading of 80,000 pounds and the sine of a 1 degree angle, or 1,400 pounds.

The 1,400 pound load is conservatively assumed to be applied as a point load at a location away from the ends of the TC or DSC. The resulting maximum stresses are given by Table 31, Case 9a of Roark [3.10] as:

Membrane stress:

$$\sigma = \frac{0.4P}{t^2}$$

Bending stress:

$$\sigma' = \frac{2.4P}{t^2}$$

Therefore, the maximum membrane plus bending stress is:

$$\sigma + \sigma' = \frac{2.8P}{t^2}$$

For the DSC shell, t = 0.500 inch. Substituting for t and using a value of P equal to 1,400 pounds, the maximum extreme fiber stresses in the DSC shell are 15.7 ksi. This local stress is conservative in that small deformations create a larger contact area, i.e., not a point load, and the stress is actually lower than calculated. In addition, the deformations are limited by the gap between the shell and basket. As such, this stress is considered a secondary stress and is enveloped by the handling stresses shown in Table P.3.6-2 (24PTH-S/-L DSCs) or Table P.3.6-3 (24PTH-S-LC DSC).

The tangential component of ram loading under the assumed condition is less than the 80,000 lbs force of the jammed condition, axial sticking calculated above and as such is not considered further.

In both scenarios for a jammed DSC, the stress in the DSC shell is demonstrated to be much less than the ASME Code allowable stress and below the yield value of the material. Therefore, permanent deformation of the DSC shell does not occur. There is no potential for breach of the DSC containment pressure boundary and, therefore, no potential for release of radioactive material.

There is no change to the required corrective actions, as described in the FSAR Section 8.1.2, for the jammed DSC conditions.

P.3.6.2.2 Off-Normal Thermal Loads Analysis

As described in Section 8.1.2, the NUHOMS® System is designed for use at all reactor sites within the continental United States. Therefore, off-normal ambient temperatures of -40°F (extreme winter) and 117°F (extreme summer) are conservatively chosen. In addition, even though these extreme temperatures would likely occur for a short period of time, it is conservatively assumed that these temperatures occur for a sufficient duration to produce steady state temperature distributions in each of the affected NUHOMS® components. Each licensee should verify that this range of ambient temperatures envelopes the design basis ambient

temperatures for the ISFSI site. The NUHOMS® System components affected by the postulated extreme ambient temperatures are the TC and DSC during transfer from the plant's fuel/reactor building to the ISFSI site, and the HSM Model 102/HSM-H during storage of a DSC.

Section P.4 provides the off-normal thermal analyses for storage and transfer mode for the NUHOMS®-24PTH DSC. Maximum DSC shell assembly thermal stress analysis results for the normal and off-normal conditions are summarized in Table P.3.6-2 and Table P.3.6-3. Basket assembly thermal results are summarized in Section P.3.4.4. The resulting stress intensities for the NUHOMS®-24PTH DSC are acceptable.

The off-normal stress analysis results for the HSM Model 102 do not change from those documented in Chapter 8.1 because the maximum heat load for the 24PTH-S-LC DSC stored in HSM Model 102 is still limited to 24 kW. The off-normal stress analysis results for the HSM-H are presented in P.3.6.2.3.

The evaluation for the off-normal thermal loading for the OS197/OS197H/OS197FC TC is presented in P.3.6.2.4.

P.3.6.2.3 HSM-H Off-Normal Loads

(A) Off-Normal Thermal Loads Analysis

This load case is the same as the normal thermal load but with an ambient temperature range from -40°F to 117°F. The temperature distribution for the extreme ambient conditions are used in the analysis for the concrete component evaluation.

(B) Off-Normal Handling Loads Analysis

This load case assumes that the TC is not accurately aligned with respect to the HSM-H resulting in binding of the 24PTH-DSC during a transfer operation causing the hydraulic pressure in the ram to increase. The ram force is limited to a maximum load of 80 kips during insertion and 80 kips during retrieval. Therefore, for the steel support structure, the off-normal jammed canister load (RA) is defined as an axial load on one rail of 80 kips during insertion and 80 kips during retrieval, plus a vertical load of one half the 24PTH-DSC weight (on both rails) at the most critical location. The off-normal operating handling loads are considered as live loads for the design of the concrete components.

The results of the HSM-H concrete components for off-normal load analysis are presented in Table P.3.6-10.

P.3.6.2.4 OS197/OS197H/OS197FC Off-Normal Loads

The thermal stress evaluations for the OS197/OS197H/OS197FC presented in Section P.3.6.1.5 include the governing off-normal thermal loads with the increased heat loads associated with the 24PTH DSC.

As discussed in Section P.3.6.1.5 the evaluations for non-thermal loads are not affected, with exception of the cask lid stresses, which are increased by 2.5%. This increase in primary stresses has been considered in the summary results included in Table P.3.6-13.

P.3.6.3 Damaged Fuel Integrity Assessment for Normal and Off-Normal Loads

Per the definition in Table P.2-1, damaged PWR fuel assemblies are fuel assemblies containing missing or partial fuel rods or fuel rods with known or suspected cladding defects greater than hairline cracks or pinhole leaks. The extent of cladding damage in the fuel rods is to be limited such that a fuel pellet is not able to pass through the damaged cladding during handling and retrievability is assured following Normal/Off-Normal conditions.

This section summarizes the evaluations performed to demonstrate structural integrity of the damaged fuel under normal and off-normal operations loads. The evaluations consider the effects of cladding defect size, cladding rupture geometry, and reduced cladding thickness due to oxidation effects.

Normal operation loads for storage conditions include stresses due to dead weight, thermal, and handling loads resulting from DSC fuel loading/unloading, fuel transfer to the ISFSI, and DSC insertion to and retrieval from the HSM. These handling/transfer operations are performed slowly by trained operations personnel and follow detailed procedures. The applicable off-normal load for storage conditions is the off-normal handling load (i.e. jammed canister condition). Because the 24PTH DSC is a dual-purpose canister, it has been evaluated for loads that bound the Part72 normal and off-normal storage conditions such as those defined in the NUHOMS® MP197 Transport SAR [3.33].

Both linear-elastic stress analysis and linear elastic fracture mechanics methods are employed to evaluate the integrity of the fuel cladding. Table P.3.6-15 shows a summary of the PWR fuel assemblies design parameters used in these evaluations. A cladding thickness reduction of 120 μm has been assumed in the structural integrity evaluations to account for waterside and inner surface oxidation.

The linear elastic stress analyses use basic stress equations, conservation of energy principles, and fundamental kinematic relationships to calculate cladding stresses due to normal and off-normal loads. The stress evaluations conservatively consider the full weight of the fuel pellets in the determination of cladding stresses. The handling/transfer loads produce the controlling stresses from normal and off-normal operation loads. The computed maximum stresses for the controlling loads are summarized in Table P.3.6-16. The computed maximum stresses are compared to the irradiated cladding yield stress, and a stress ratio is calculated. As shown in the table, the maximum stress ratios correspond to the hypothetical one-foot end and side drops. Substantial margins exist for all loads considered. All the stresses summarized in Table P.3.6-16 are compressive stresses with the exception of the one-foot side drop case, which produces tension stresses due to bending. Tension stresses are evaluated using fracture mechanics principles, as described below. The maximum compressive load obtained from all analyzed load cases is significantly lower than the calculated buckling capacity for the bounding fuel. Thus, stability of the fuel tube cladding is maintained during normal and off-normal loads.

The fracture mechanics evaluations take into consideration defect size and/or ruptured geometry of the cladding. The following fracture mechanics models are used for determination of stress intensity factors in the cladding:

Model 1: Central Crack in Finite Width Strip Subject to Uniform Tension, as shown in Figure P.3.6-18 [3.29].

Model 2: Through-Wall Circumferential Crack in Cylinder Under Bending, as shown in Figure P.3.6-19 [3.30].

These models correspond to flaw geometries that are conservatively defined for the fracture mechanics evaluations. It is conservatively assumed that the crack location is at the location of the spacer grids, which is the location of maximum bending moment. The bending stress in the fuel tube is based on the maximum bending moment calculated for a continuous beam model, as shown in Appendix 2 of [3.31]. The full mass of the fuel and an effective stiffness of the cladding and fuel are considered in the computation of the cladding bending stress. The stiffness of the cladding is conservatively assumed to be 50% effective due to defected geometry. Based on these considerations, the maximum bending stress is computed and used to calculate the fracture toughness stress intensity, K_I.

The first geometry, shown in Figure P.3.6-18, shows an idealized view of a fuel tube that has ruptured and bulged to a diameter larger that the original diameter. The tension load, P, is obtained by integration of the tensile loads caused by the bending moment. Stress intensity factor, K_I, is calculated using the solutions in [3.29] and assuming a flaw opening (i.e., crack length) to equivalent plate width ratio (2a/W) of 0.5.

The second geometry, shown in Figure P.3.6-19, corresponds to a cylinder under bending moment. The solution from [3.30] is used to obtain stress intensity factor, assuming a flaw opening (i.e., crack length) to tube diameter ratio (2a/D) of 0.5.

The basis for the 0.5 crack length to tube diameter ratios is experimental tests on "as received" Zircalloy fuel tubes with measured burst temperatures of up to 909 °C, which showed flaw opening to diameter ratios of 0.4 to 0.5 [3.32].

The stresses used for the fracture mechanics evaluations are those resulting from the hypothetical one-foot side (horizontal) drop load case (24g from [3.33]).

Stress intensity factors, K_I, obtained using the equations shown in the figures for each of the above described models, are compared against the plane strain fracture toughness stress intensity, K_{IC}, obtained experimentally for Zircalloy cladding material, under irradiated conditions [3.34]. The results of the fracture mechanics evaluations are summarized in Table P.3.6-17.

These evaluations demonstrate that the damaged fuel assemblies in the NUHOMS®-24PTH DSC retain their structural integrity when subjected to normal and off-normal operation loads, and therefore, fuel retrievability is assured.

Table P.3.6-1
NUHOMS® 24PTH System Normal Operating Loading Identification

Load Type	Affected Component				
	DSC Shell Assembly	DSC Basket	DSC Support Structure	HSM Model 102/ HSM-H	On-Site TC
Dead Weight	X	X	X	X	X
Internal/External Pressure	X				
Normal Thermal	X	X	X	X	X
Normal Handling	X	X	X	X	X
Live Loads				X	X

Table P.3.6-2
Maximum NUHOMS®-24PTH-S / 24PTH-L DSC Shell Assembly Stresses for Normal and Off-Normal Loads

DSC Components	Stress Type	Maximum Stress Intensity (ksi)[1]			
		Dead Weight	Internal Pressure[6]	Thermal[2]	Handling[4]
DSC Shell	Primary Membrane	2.69	8.90	N/A	4.10
	Membrane + Bending	7.60	9.18	N/A	7.60
	Primary + Secondary	7.60	16.29	43.94	60.04[7]
Inner Top Cover Plate	Primary Membrane	0.58	0.74	N/A	1.68
	Membrane + Bending	1.67	16.76	N/A	1.84
	Primary + Secondary[5]	1.63	16.76	24.52	1.85
Outer Top Cover Plate	Primary Membrane	1.11	2.65	N/A	1.11
	Membrane + Bending	1.63	7.43	N/A	1.63
	Primary + Secondary[5]	1.17	7.22	23.69	1.17
Inner Bottom Cover Plate	Primary Membrane	0.71	0.56	N/A	3.22
	Membrane + Bending	0.84	1.48	N/A	4.80
	Primary + Secondary[5]	0.83	1.51	36.41	49.26[8]
Outer Bottom Cover Plate	Primary Membrane	0.74	0.83	N/A	5.27
	Membrane + Bending	1.31	1.47	N/A	22.72
	Primary + Secondary[5]	1.18	1.15	30.81	39.97[8]

(1) Values shown are maximum irrespective of location.
(2) Envelope of Normal and Off-Normal ambient temperature conditions.
(3) Not used.
(4) Maximum of deadweight, 1g axial, 60 kips pull or 80 kips push (except as noted).
(5) Per Note 2 of Table NB3217-1, the stress at the intersection between a shell and a flat head may be classified as secondary (Q) if the bending moment at the edge is not required to maintain the bending stresses in the middle of the head within acceptable limits. Thus, the primary plus secondary stresses were computed in a finite element model that assumed moment transferring connections, whereas the primary membrane plus bending stresses were computed assuming pinned connections. All thermal stresses are classified as secondary.
(6) Due to the off-normal 20 psig internal pressure condition.
(7) Results are for the combination of deadweight, 15 psi internal pressure, the 1g vertical transfer load and thermal.
(8) Results are for the combination of deadweight, 20 psi internal pressure, the 80 kip ram push load and thermal.

Table P.3.6-3
Maximum NUHOMS®-24PTH-S-LC DSC Shell Assembly Stresses for Normal and Off-Normal Loads

DSC Components	Stress Type	Maximum Stress Intensity (ksi) (1)			
		Dead Weight	Internal Pressure (2)	Thermal (3)	Handling (4)
DSC Shell	Primary Membrane	5.38	2.43	N/A	7.13
	Membrane + Bending	7.60	5.63	N/A	7.71
	Primary + Secondary	7.60	5.63	21.68	7.71
Inner Top Forging	Primary Membrane	3.26	2.22	N/A	3.26
	Membrane + Bending	5.99	5.00	N/A	5.99
	Primary + Secondary	5.99	5.00	9.11	5.99
Outer Top Cover Plate	Primary Membrane	1.27	0.90	N/A	1.27
	Membrane + Bending	2.23	3.47	N/A	2.23
	Primary + Secondary	2.23	3.47	9.29	2.23
Bottom Forging	Primary Membrane	1.37	1.51	N/A	6.46
	Membrane + Bending	3.02	4.68	N/A	17.01
	Primary + Secondary	3.02	4.68	5.40	17.01
Outer Bottom Cover Plate	Primary Membrane	2.60	1.88	N/A	6.11
	Membrane + Bending	9.10	3.47	N/A	17.93
	Primary + Secondary	9.10	3.47	5.19	17.93

(1) Values shown are maximum irrespective of location.
(2) Due to off-normal 20 psig internal pressure condition.
(3) Envelope of Normal and Off-Normal ambient temperature conditions.
(4) Maximum of deadweight, 1g axial, 60 kips pull or 80 kips push.

Table P.3.6-4
NUHOMS® -24PTH Basket Model Components, Element Types and Materials

Structural Component	LS DYNA Element Type	Material
Fuel Compartment Tube Structure	Fully Integrated Shell	Type 304 Stainless Steel
DSC Shell	Fully Integrated Shell	Type 304 Stainless Steel
R45 Transition Rails	Fully Integrated Shell	Type 304 Stainless Steel
R90 Transition Rails	Fully Integrated Solid	Type 6061 Aluminum
TC Shell & TC Rails	Fully Integrated Shell	N/A (Rigid Bodies)
Steel Insert Plates (Straps)-to-Tube Welds	Beam	Type 304 Stainless Steel

Table P.3.6-5
Material Properties Used in Normal Condition 24PTH Basket Analyses

Component	Material[2] [3]	Evaluation Temperature[1]
Fuel Compartment Tube Structure	1/4" Thick, Type 304 Stainless Steel	800°F (All conditions)
Steel Insert Plates (Straps)	Type 304 Stainless Steel	800°F (All conditions)
Welded R45 Steel Transition Rails	3/8" Thick Type 304 Stainless Steel	800°F (All conditions)
R90 Aluminum Transition Rails	6061 Aluminum Alloy	600°F

Notes:

1. For the steel components, stress checks were performed at the enveloping temperatures listed.
2. ASME Code properties for Type 304 Stainless Steels from Table P.3.3-1.
3. Properties for 6061 Aluminum from Table P.3.3-5.

Table P.3.6-6
Normal Condition Stress Summary for 24PTH Basket Components –Vertical DW/Handling Loads

Component	Stress (Axial Compression)			Notes
	Calculated Stress (ksi)	Allowable Stress (ksi)	Ratio	
Fuel Compartment Tubes	0.087	7.70	0.01	DW, Type 304, 800°F
Fuel Compartment Tubes	0.17	7.70	0.02	Handling, Type 304, 800°F
R45 Transition Rails	0.14	7.70	0.02	DW, Type 304, 800°F
R45 Transition Rails	0.28	7.70	0.04	Handling, Type 304, 800°F
R90 Transition Rails	0.017	4.2	< 0.01	DW, 800°F, Type 6061, 600°F
R90 Transition Rails	0.034	4.2	0.01	Handling, Type 6061, 600°F

Table P.3.6-7
Normal Condition Stress Summary for 24PTH Basket Components Horizontal DW/Handling

Stainless Steel Components

Component	Stress Category	Maximum SI			Allowable SI (ksi)	Stress Ratios		
		OS197 DW (ksi)	HSM DW (ksi)	Handling (ksi)		OS197 DW	HSM DW	Handling
Fuel Tubes	P_m	1.87	1.54	3.74	15.2	0.12	0.10	0.25
	$P_m + P_b$	2.84	2.55	5.69	22.8	0.12	0.11	0.25
	$P_m + P_b + Q$	9.65	8.68	13.5	45.6	0.21	0.19	0.30
R45 Main Plates	P_m	1.53	6.08	3.06	15.2	0.10	0.40	0.20
	$P_m + P_b$	6.11	6.42	12.21	22.8	0.27	0.28	0.54
	$P_m + P_b + Q$	14.83	15.14	20.93	45.6	0.33	0.33	0.46
R45 Stiffeners	P_m	1.03	6.65	2.06	15.2	0.07	0.44	0.14
	$P_m + P_b$	2.22	6.68	4.45	22.8	0.10	0.29	0.20
	$P_m + P_b + Q$	5.22	9.62	7.44	45.6	0.11	0.21	0.16
Basket Straps	P_m	0.85	0.34	1.71	15.2	0.06	0.02	0.11
	$P_m + P_b$	2.81	1.75	5.62	22.8	0.12	0.08	0.25
	$P_m + P_b + Q$	8.17	7.11	11.0	45.6	0.18	0.16	0.24

Note: Level A allowables for SA-240 Type 304 at 800°F

Aluminum (R90 Transition Rails)

Component	Stress Category	Maximum SI			Yield S_y, 6061	Stress Ratios		
		OS197 DW (ksi)	HSM DW (ksi)	Handling (psi)		OS197 DW	HSM DW	Handling
R90 Rails	Max. Stress	17	134	268	4,200	0.004	0.03	0.06

Notes: 1. Conservatively, the yield stress corresponding to annealed 6061 aluminum at 600°F is used.

2. Handling loads are 2 x DW loads.

Table P.3.6-8
Normal Condition Fuel Compartment Tubes-to-Steel Insert Plates (Straps) Weld Loads for 24PTH Basket

Load Condition	Enveloping Load (Kips)
OS197 Deadweight	1.2
HSM-H Deadweight	0.8
Thermal Loads	1.7

Note: 1. Handling loads are 2 x DW loads.

Table P.3.6-9
NUHOMS® Off-Normal Operating Loading Identification

Load Type	Affected Component				
	DSC Shell Assembly	DSC Basket	DSC Support Structure	HSM Model 102/ HSM-H	On-site TC
Dead Weight	X	X	X	X	X
Internal/External Pressure	X				
Off-Normal Thermal	X	X	X	X	X
Off-Normal Handling	X	X	X	X	X

Table P.3.6-10
Maximum NUHOMS® HSM-H Concrete Component Forces and Moment for Normal and Off-Normal Loads

Load Case	Concrete Component	Forces/Moments			
		Shear, V_{01} (kips/ft)	Shear, V_{02} (kips/ft)	Moment, M_1 (kip-in/ft)	Moment, M_2 (kip-in/ft)
Dead Load (DW)	Rear Wall	1.20	0.60	5.40	20.10
	Side Wall	4.40	2.80	24.80	20.40
	Front Wall	5.30	5.10	75.30	190.80
	Roof	2.80	3.50	45.20	136.20
Live Load (LL)	Rear Wall	1.40	0.60	6.70	20.10
	Side Wall	1.20	0.80	8.50	9.60
	Front Wall	30.20	23.80	344.60	510.60
	Roof	0.90	1.30	16.00	47.20
Operational Handling Load (RO)	Rear Wall	Included in Live Load (LL)			
	Side Wall				
	Front Wall				
	Roof				
Off-Normal Handling Load (RA)	Rear Wall	Included in Live Load (LL)			
	Side Wall				
	Front Wall				
	Roof				
Design Wind Load (WW)	Rear Wall	4.88	2.20	81.50	124.88
	Side Wall	27.00	10.87	190.50	135.00
	Front Wall	12.75	12.12	179.00	289.12
	Roof	3.25	2.50	135.50	80.88

Notes:
(1) V_{01} and V_{02} are out of plane shears.
(2) M_1 and M_2 are out of plane moments.

Table P.3.6-11
Comparison of ANSYS Results at TC Top Lid Center

Case 1: 1g DW	Standard Top Lid	Vented Top Lid	Δ	Notes
P_m	7.31 psi	7.79 psi	+6.6%	P_m insignificant at plate center
$P_m + P_b$	200.6 psi	205.4 psi	+2.4%	

Case 2: 1g Axial + 80 kips	Standard Top Lid	Vented Top Lid	Δ	Notes
P_m	184. psi	196 psi	+6.5%	P_m insignificant at plate center
$P_m + P_b$	5078 psi	5163 psi	+1.7%	

Table P.3.6-12
TC Enveloping Thermal Stresses for Load Combinations

TC Component	Maximum Thermal Stress Intensity (ksi)
Top Forging	30.7
Inner Liner	43.4
Bottom Forging	42.8
Structural Shell	18.9
NS-3 Cover Plate	14.9
Ram Access Forging	19.2
Bottom End Cover Plate	7.6
Top Lid	22.4

Table P.3.6-13
OS197/OS197H/OS197FC TC Combined Stresses For Normal Condition Loads[(1)(2)]

TC Component	Stress Category	Maximum Primary Stress (ksi)	Thermal Stress (ksi)	Combined Stress (ksi)	Allowable Stress (ksi)	Stress Ratio (ksi)	Notes
Shell (Type 304)	P_m	2.05	N/A	2.05	18.7	0.11	400°F
	$P_m + P_b$	14.9	N/A	14.9	28.1	0.53	
	$P_m + P_b + Q$	14.9	18.9	33.8	56.1	0.60	
Inner Liner (Type 304)	P_m	4.32	N/A	4.32	18.7	0.23	400°F
	$P_m + P_b$	4.32	N/A	4.32	28.1	0.15	
	$P_m + P_b + Q$	4.32	43.4	47.8	56.1	0.85	
Top Flange (SA-182, F304N)	P_m	2.05	N/A	2.05	20.3	0.10	400°F (SA-182, F304N)
	$P_m + P_b$	14.9	N/A	14.9	30.5	0.49	
	$P_m + P_b + Q$	14.9	30.7	45.6	60.9	0.75	
Top Cover Plate (Type 304)	P_m	0.72	N/A	0.72	18.7	0.04	400°F
	$P_m + P_b$	5.44	N/A	5.44	28.1	0.19	
	$P_m + P_b + Q$	5.44	22.4	27.8	56.1	0.50	
Bottom Cover Plate (Type 304)	P_m	1.18	N/A	1.18	18.7	0.06	400°F
	$P_m + P_b$	8.57	N/A	8.57	28.1	0.30	
	$P_m + P_b + Q$	8.57	7.65	16.2	56.1	0.29	
Bottom Supt. Ring (SA-182, F304N)	P_m	2.05	N/A	2.05	20.3	0.10	400°F (SA-182, F304N)
	$P_m + P_b$	14.9	N/A	14.9	30.5	0.49	
	$P_m + P_b + Q$	14.9	42.8	57.7	60.9	0.95	

Notes:
1. Primary stresses (mechanical load stresses) are based on the bounding OS197H TC stresses as summarized in Chapter 8.
2. Thermal stresses are applicable to the OS197/OS197H/OS197FC TCs for heat loads above 24 kW. For heat loads of up to 24 kW, the thermal stresses as reported in Chapter 8 are applicable.

Table P.3.6-14
OS197/OS197H/OS197FC TC Structural Shell Stresses at TC Trunnions

Location	Load	Load	Stress Category	SI (ksi)	Allowable[3] (ksi)	Ratio
Upper Trunnion	Shell @ Trunnion Sleeve	Critical Lift	P_L	4.52	28.1	0.16
			$P_L + P_b + Q_{MECH}$	11.3	56.1	0.20
			$Q_{THERMAL}$[1]	10.0	--	--
			$P_L + P_b + Q_{TOTAL}$	21.3	56.1	0.38
		Handling	P_L	14.1	28.1	0.50
			$P_L + P_b + Q_{MECH}$	33.9	56.1	0.60
			$Q_{THERMAL}$[1]	10.0	--	--
			$P_L + P_b + Q_{TOTAL}$	43.9	56.1	0.78
	Shell Away from Trunnion Sleeve	Critical Lift	P_m	3.95	18.7	0.21
			$P_L + P_b$	8.72	28.1	0.31
			$Q_{THERMAL}$[1]	10.0	--	--
			$P_L + P_b + Q_{TOTAL}$	18.7	56.1	0.33
		Handling	P_m	9.05	18.7	0.48
			$P_L + P_b$	21.8	28.1	0.78
			$Q_{THERMAL}$[1]	10.0	--	--
			$P_L + P_b + Q_{TOTAL}$	31.8	56.1	0.57
Lower Trunnion	Shell @ Trunnion Sleeve	Critical Lift	P_L	5.56	28.1	0.20
			$P_L + P_b + Q_{MECH}$	11.3	56.1	0.20
			$Q_{THERMAL}$[2]	20.8	--	--
			$P_L + P_b + Q_{TOTAL}$	32.1	56.1	0.57
		Handling	P_L	9.45	28.1	0.34
			$P_L + P_b + Q_{MECH}$	20.9	56.1	0.37
			$Q_{THERMAL}$[2]	20.8	--	--
			$P_L + P_b + Q_{TOTAL}$	41.7	56.1	0.74
	Shell Away from Trunnion Sleeve	Critical Lift	P_m	5.36	18.7	0.29
			$P_L + P_b$	10.6	28.1	0.38
			$Q_{THERMAL}$[2]	20.8	--	--
			$P_L + P_b + Q_{TOTAL}$	31.4	56.1	0.56
		Handling	P_m	8.83	18.7	0.47
			$P_L + P_b$	17.5	28.1	0.62
			$Q_{THERMAL}$[2]	20.8	--	--
			$P_L + P_b + Q_{TOTAL}$	38.3	56.1	0.68

Notes:
1. Maximum thermal stress in the upper trunnion area of the structural shell is 10.0 ksi.
2. Maximum thermal stress in the lower trunnion area of the structural shell is 20.8 ksi.
3. Allowables for SA-240 Type 304 at 400°F.
4. Primary stress are based on the OS197H stresses are summarized in Chapter 8.
5. Thermal stresses are applicable to the OS197/OS197H/OS197FC TCs for heat loads above 24 kW. For heat loads of up to 24 kW, the thermal stresses as reported in Chapter 8 are applicable.

Table P.3.6-15
Parameters of PWR Fuel Assemblies

Fuel Assembly Type	B&W 15x15	CE 14x14 Fort Calhoun	CE 15x15 Palisades	CE 14x14 Std/Generic	WE 14x14	WE 15x15	WE 17x17	Notes
Fuel Assembly Weight (lb)	1,682	1,320	1,550	1,370	1,402	1,555	1,585	(1,2)
No. of Rods	208	176	216	176	179	204	264	(1)
Active Fuel Length (in)	141.8	128.0	131.4	136.7	144.0	144.0	144.0	(1)
No. of Internal Spacers	6	7	8	7	5	6	6	(3)
Max. Fuel Rod Span (in)	22.0	17.0	16.0	17.0	27.0	27.0	25.0	(3,4)
Fuel Rod OD (in)	0.4273	0.4373	0.4153	0.4373	0.4193	0.4193	0.3573	(5)
Clad Thickness (in)	0.0234	0.0249	0.0229	0.0249	0.0194	0.0211	0.0194	(5)
Fuel Pellet OD (in)	0.3686	0.3815	0.3600	0.3765	0.3674	0.3659	0.3225	(1)
Fuel Tube Area (in^2)	0.0296	0.0322	0.0282	0.0322	0.0243	0.0263	0.0205	
Fuel Tube M.I. (in^4)	6.07E-04	6.87E-04	5.44E-04	6.87E-04	4.87E-04	5.24E-04	2.94E-04	
Fuel Pellet M.I. (in^4)	9.06E-04	1.04E-03	8.24E-04	9.86E-04	8.94E-04	8.80E-04	5.31E-04	
Fuel Tube + Pellet M.I. (in^4)	1.51E-03	1.73E-03	1.37E-03	1.67E-03	1.38E-03	1.40E-03	8.25E-04	
Fuel Rod Weight (lb)	8.09	7.50	7.18	7.78	7.83	7.62	6.00	(6)
Irradiated Yield Stress (psi)	80,500	80,500	80,500	80,500	80,500	80,500	80,500	(7)
Young's Modulus (psi)	10.4E6	10.4E6	10.4E6	10.4E6	10.4E6	10.4E6	10.4E6	(7)

Notes:

(1) Data are obtained from Reference [3.35].
(2) The fuel assembly weight includes BPRAs.
(3) The number of internal spacers is obtained from Reference [3.35].
(4) Maximum fuel rod span is obtained from [3.35].
(5) Includes 120 μm oxidation thickness reduction.
(6) Fuel rod weight = Fuel assembly weight / no. of rods.
(7) Data are obtained from Reference [3.31].

Table P.3.6-16
Fuel Cladding Computed Stresses and Ratios to Yield Stress

Normal and Off Normal Load Case	Computed Stress σ_{Max} (psi)	Ratio σ_{max}/σ_y (1)
1. On site transfer/handling	4,187	0.05
2. Hypothetical one foot end drop	7,564	0.09
3. Hypothetical one foot side drop	30,342	0.38

(1) σ_{max} = Maximum fuel rod cladding computed stresses.
σ_y = Yield stress of the Zircaloy cladding material equal to 80,500 psi [3.31].

Table P.3.6-17
Stress Intensities of Fuel Tubes for One Foot Side Drop Load

Fracture Mechanics Model Geometry	$K_{I\,(Max)}$ (ksi $in^{1/2}$)	K_{IC} (ksi $in^{1/2}$)(1)	Ratio K_{IMAX} / K_{Ic}
Geometry #1	15.4	35.0	0.44
Geometry #2	22.5	35.0	0.64

(1) K_{IC} = Crack initiation fracture toughness (plane strain fracture toughness), from [3.34].

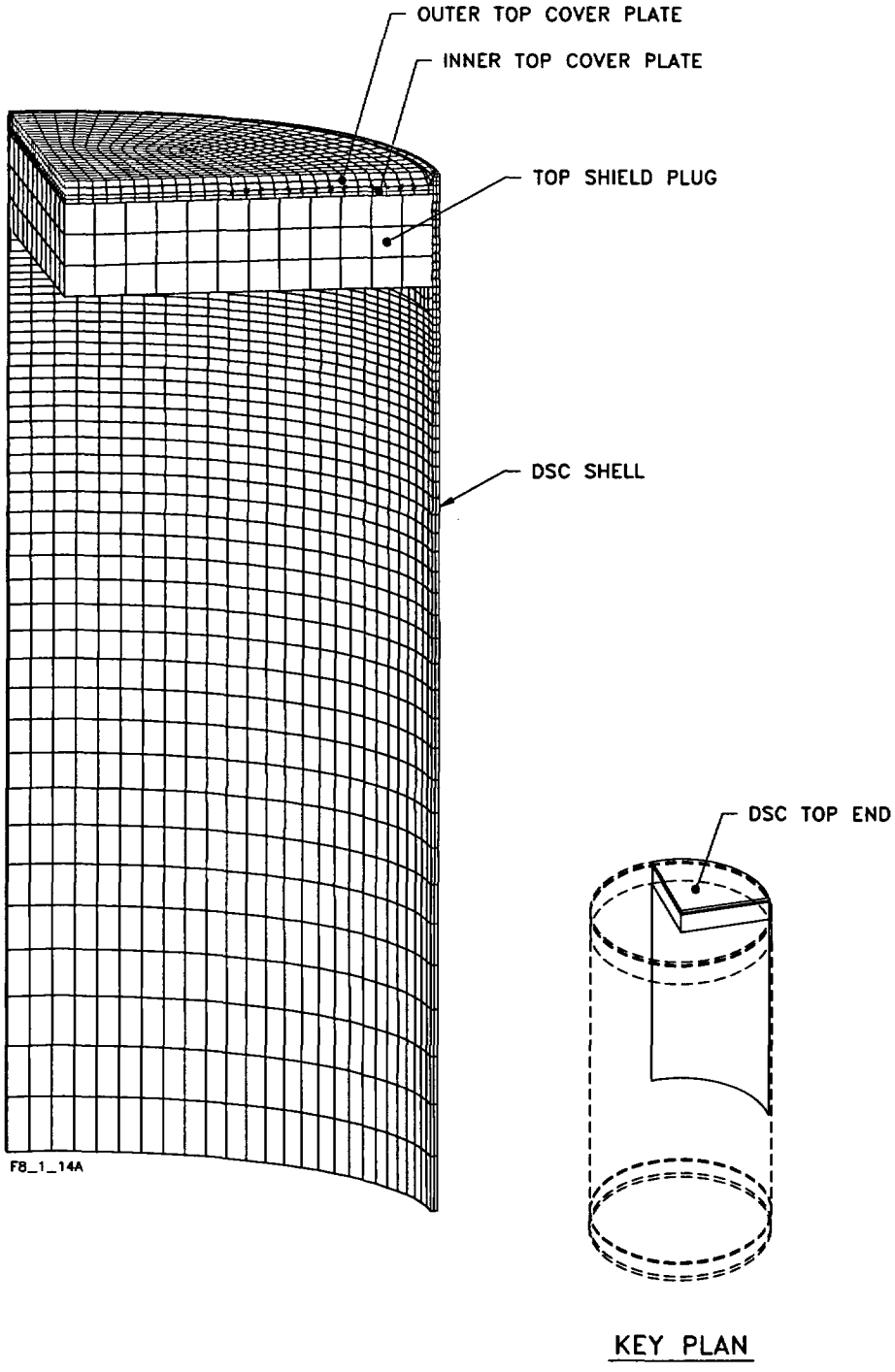

Figure P.3.6-1
24PTH-S / 24PTH-L DSC Shell Assembly Top End 90° Analytical Model

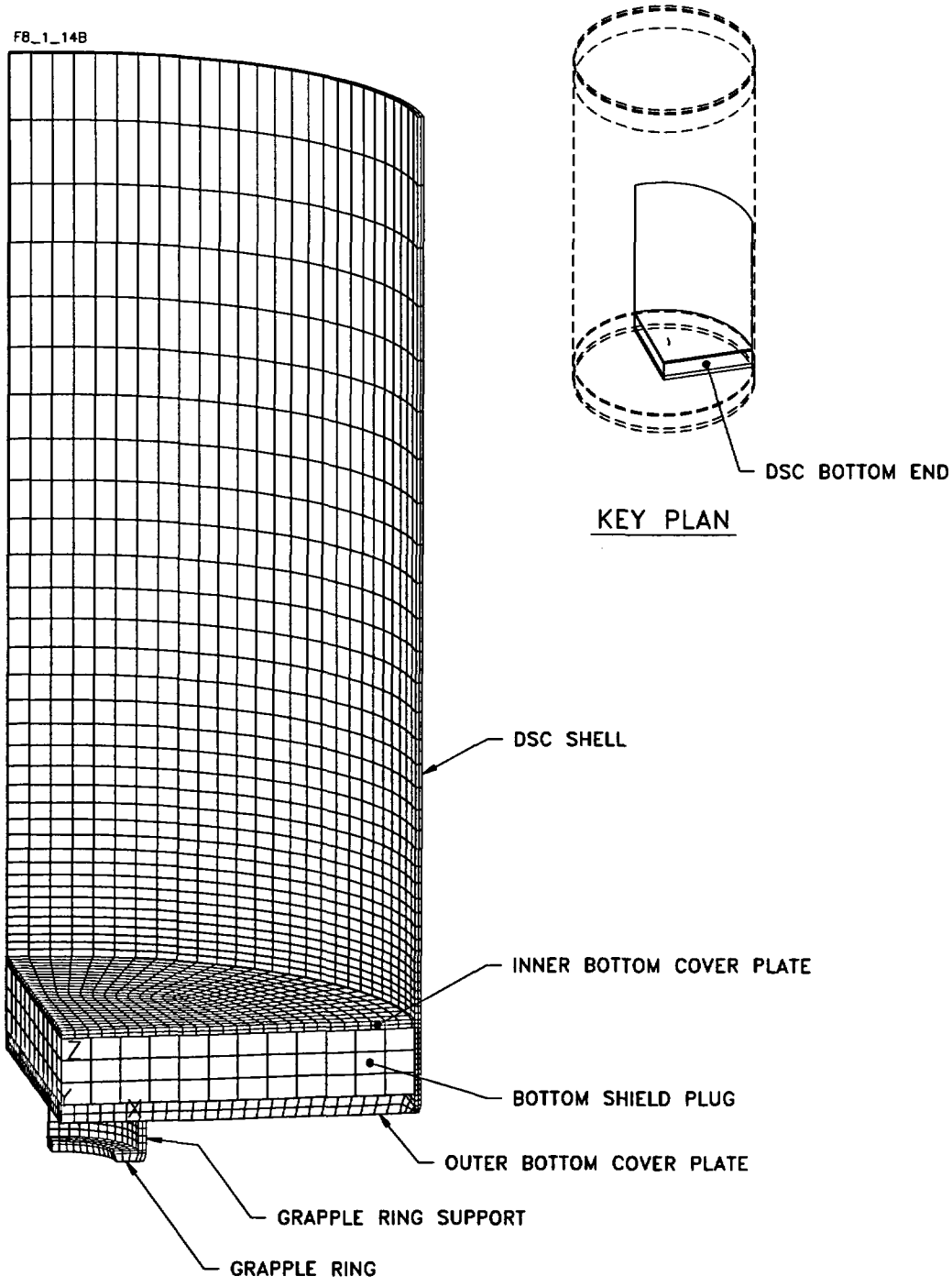

Figure P.3.6-2
24PTH-S / 24PTH-L DSC Shell Assembly Bottom End 90° Analytical Model

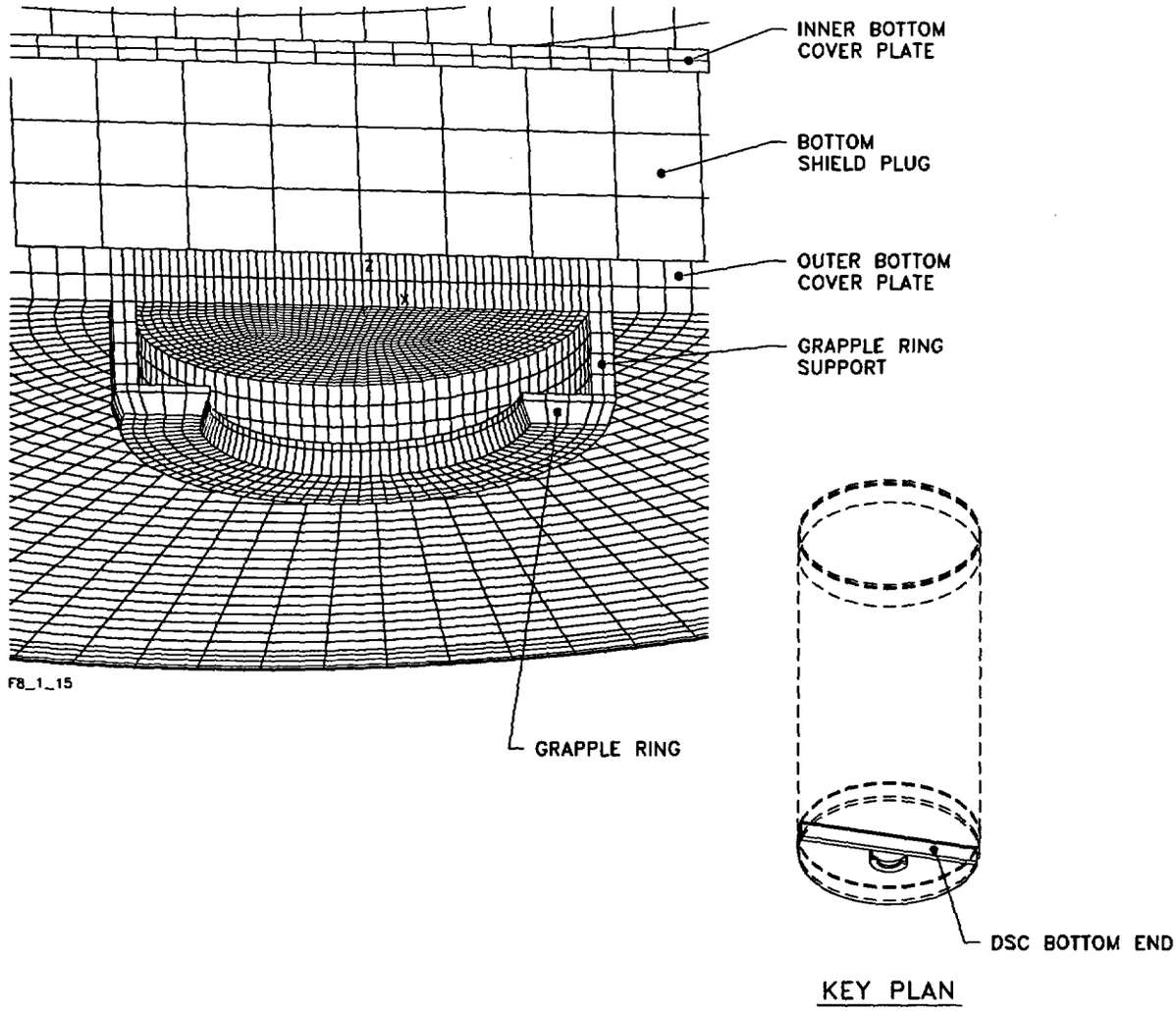

Figure P.3.6-3
Partial View of 24PTH-S / 24PTH-L DSC Shell Assembly Bottom End 180° Analytical Model Showing End Plates and Grapple Assembly

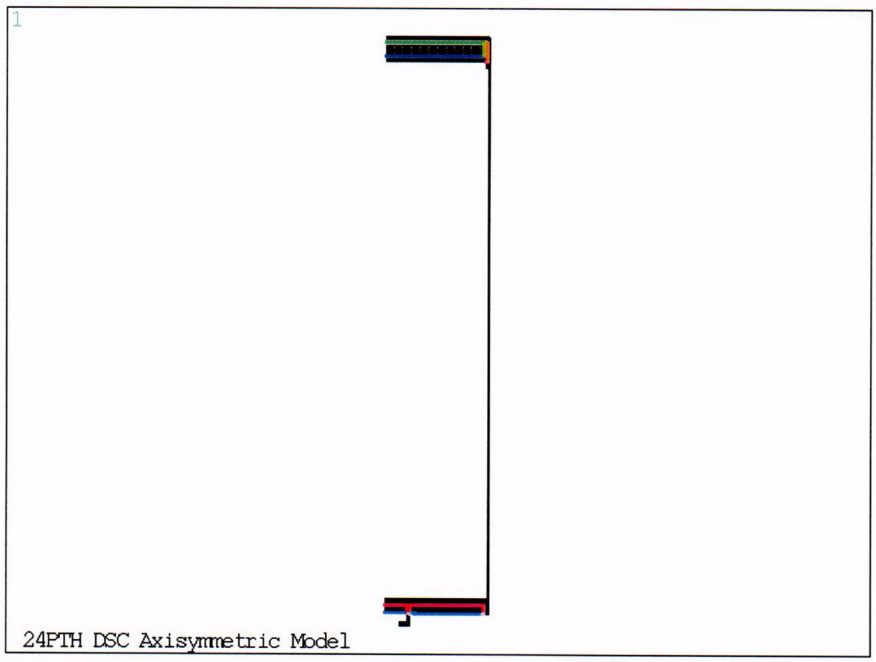

(a) Axi-symmetric Model

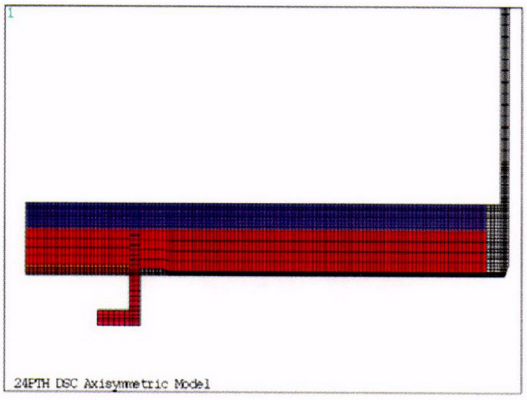

(b) Top End Close-Up View

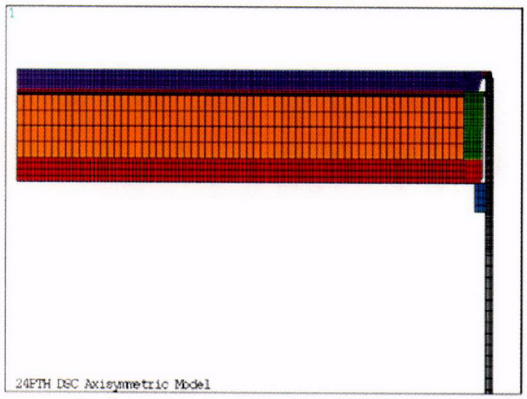

(c) Bottom End Close-Up View

Figure P.3.6-4
24PTH-S-LC DSC Shell Assembly Axisymmetric Analysis ANSYS Model

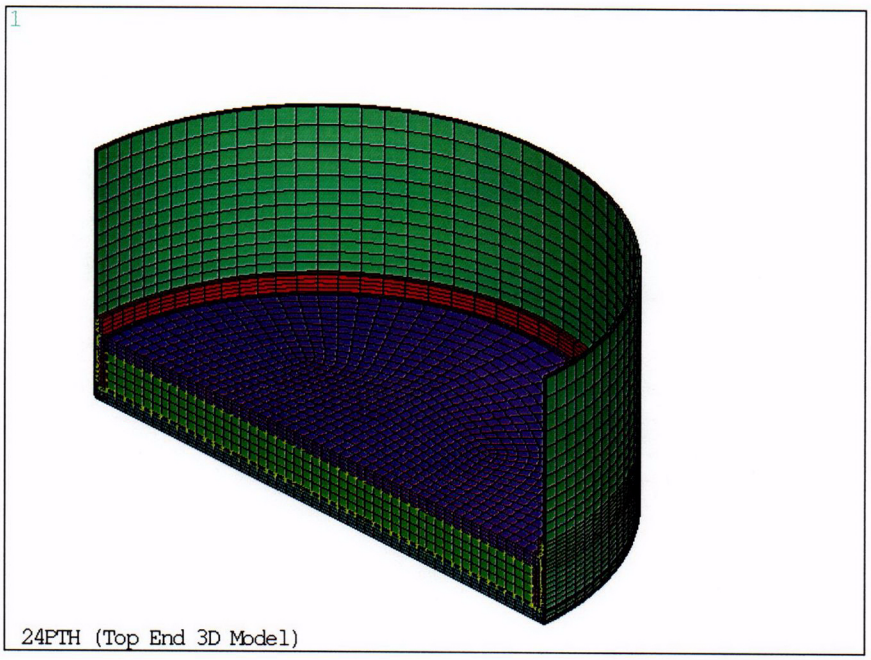

24PTH (TOP END 3D MODEL)

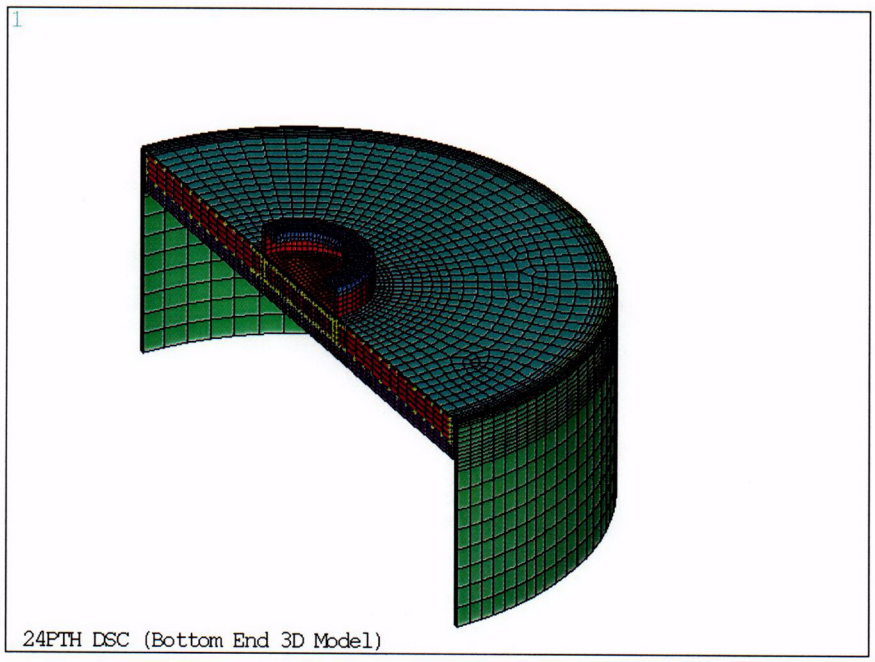

24PTH (BOTTOM END 3D MODEL)

Figure P.3.6-5
24PTH-S-LC DSC Shell Assembly Top and Bottom End 3D ANSYS Models

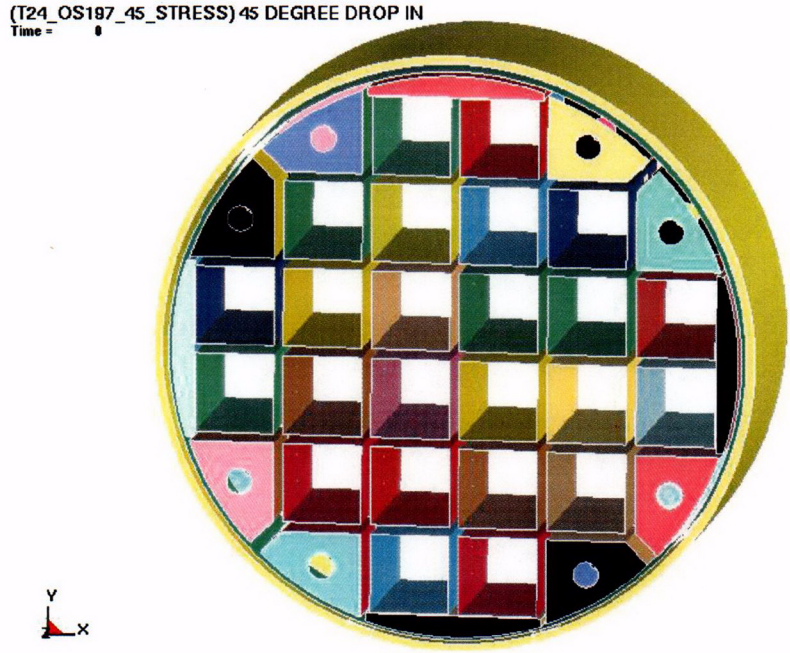

DYNA STRESS ANALYSIS MODEL - ALL PARTS

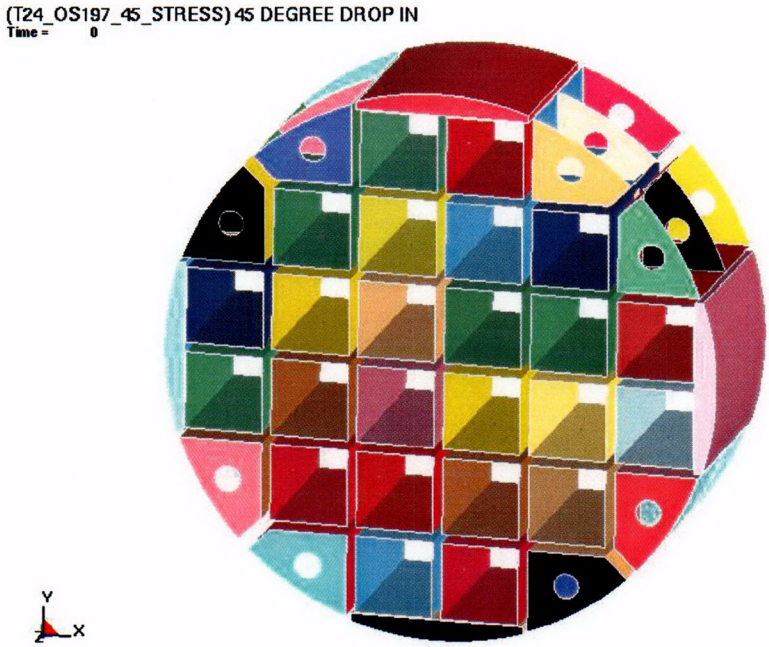

DYNA STRESS ANALYSIS MODEL - BASKET ASSEMBLY

Figure P.3.6-6
24PTH Basket LS-DYNA Stress Analysis Model

C04

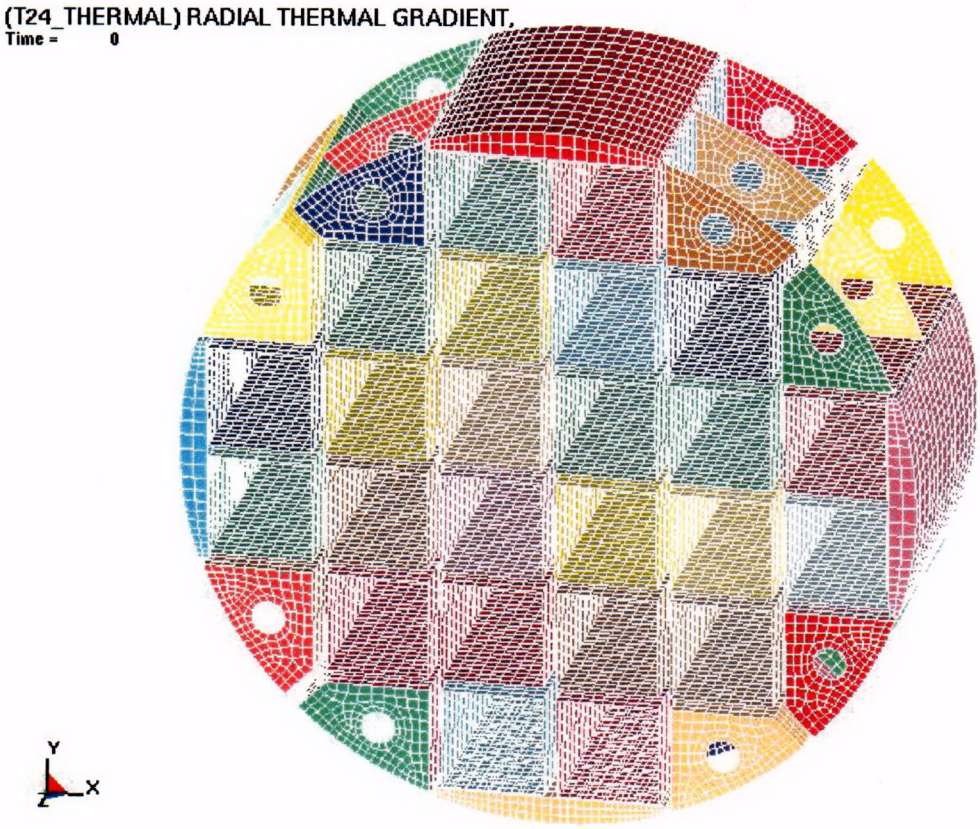

DYNA STRESS ANALYSIS MODEL - BASKET ASSEMBLY MESH

Figure P.3.6-7
24PTH Basket LS-DYNA Finite Element Stress Analysis Model

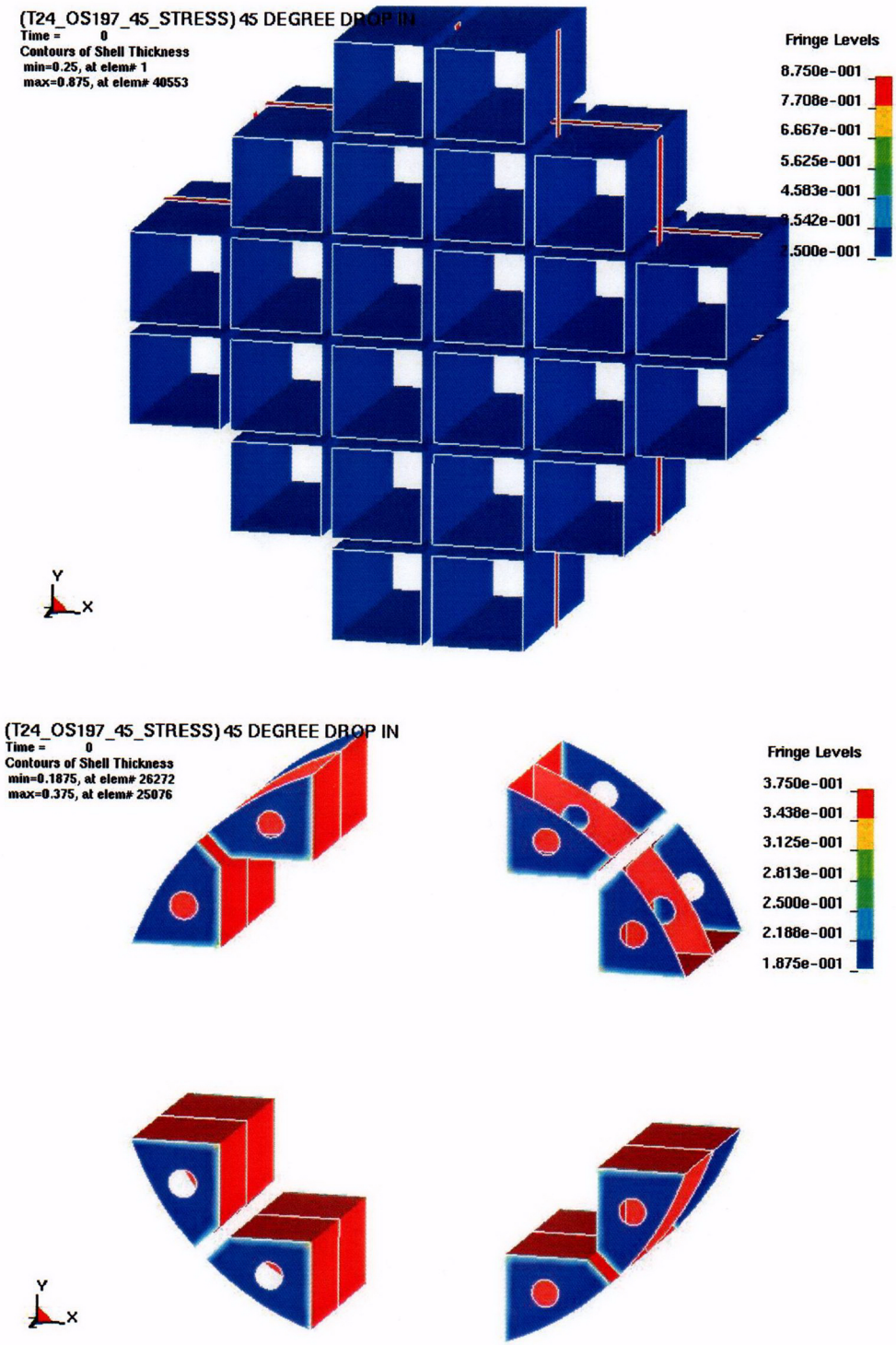

Figure P.3.6-8
24PTH Basket Model Showing Fuel Compartment Tubes, Steel Insert Plates (Straps), and R45 Transition Rails

C06

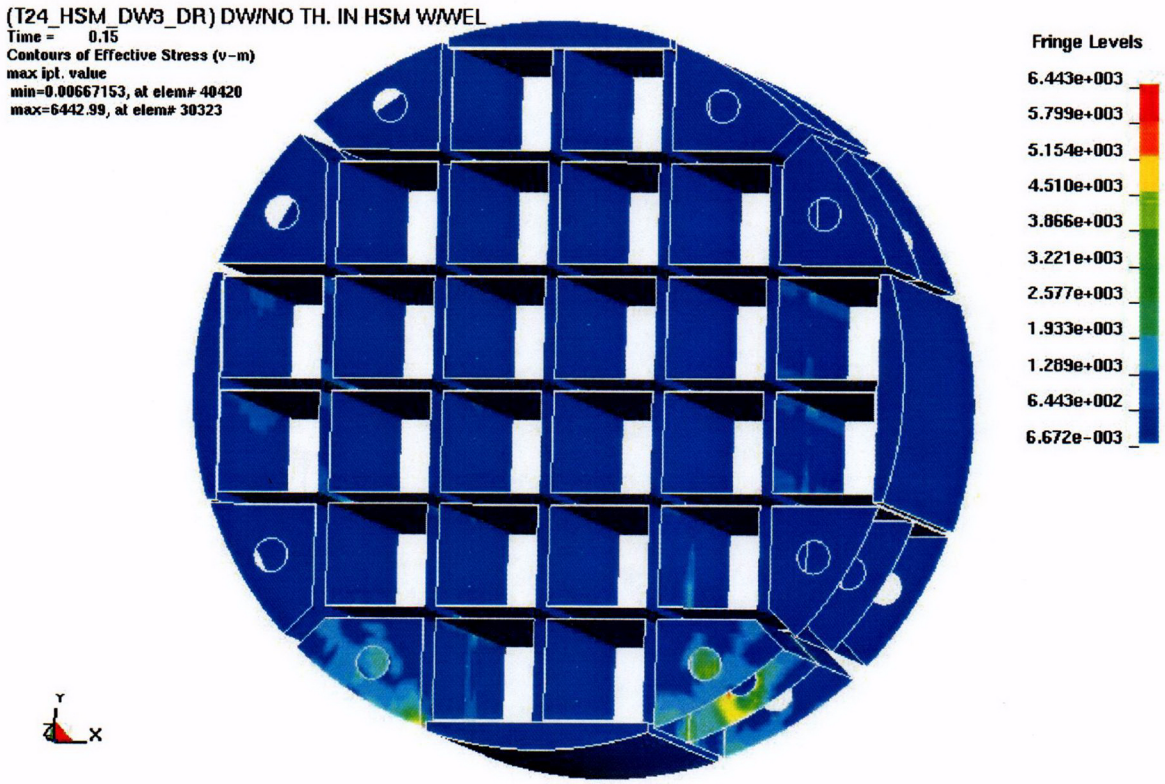

Note: These stresses are effective von Mises stresses

Figure P.3.6-9
24PTH Basket LS-DYNA Model Analyses Results – Deadweight Stresses

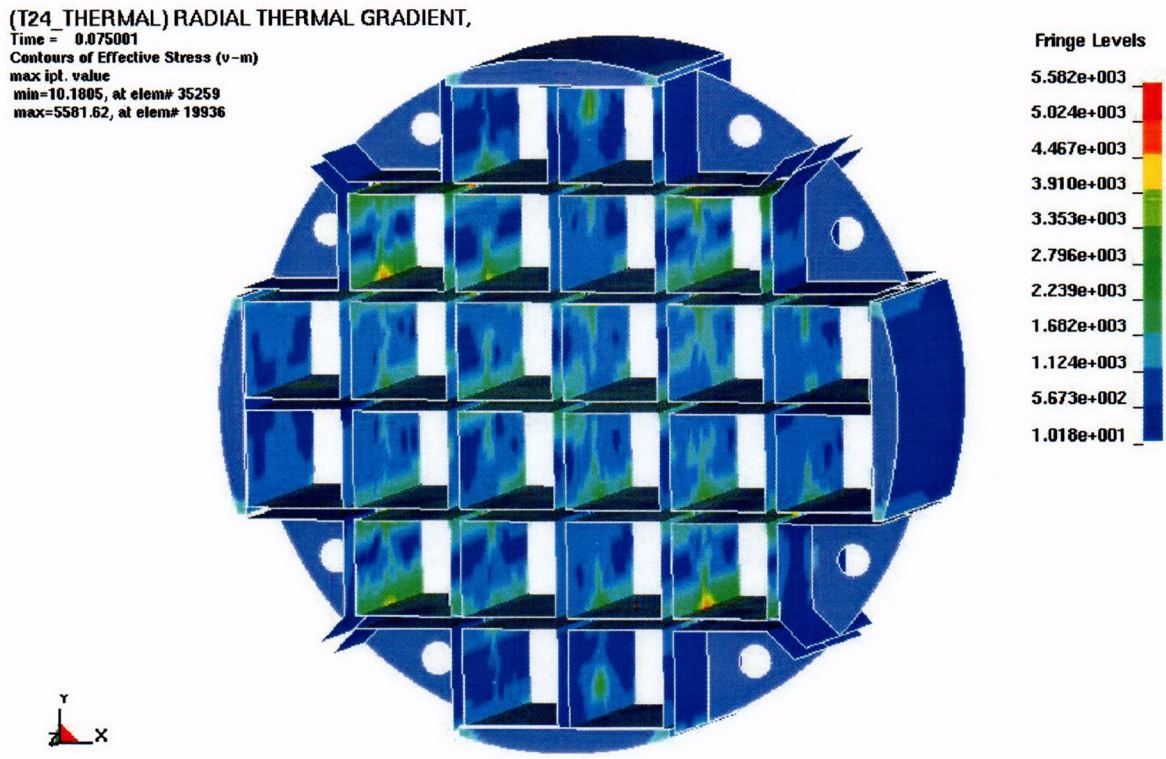

Note: These stresses are effective von Mises stresses

Figure P.3.6-10
24PTH Basket LS DYNA Model Analysis Results – Thermal Stresses

C08

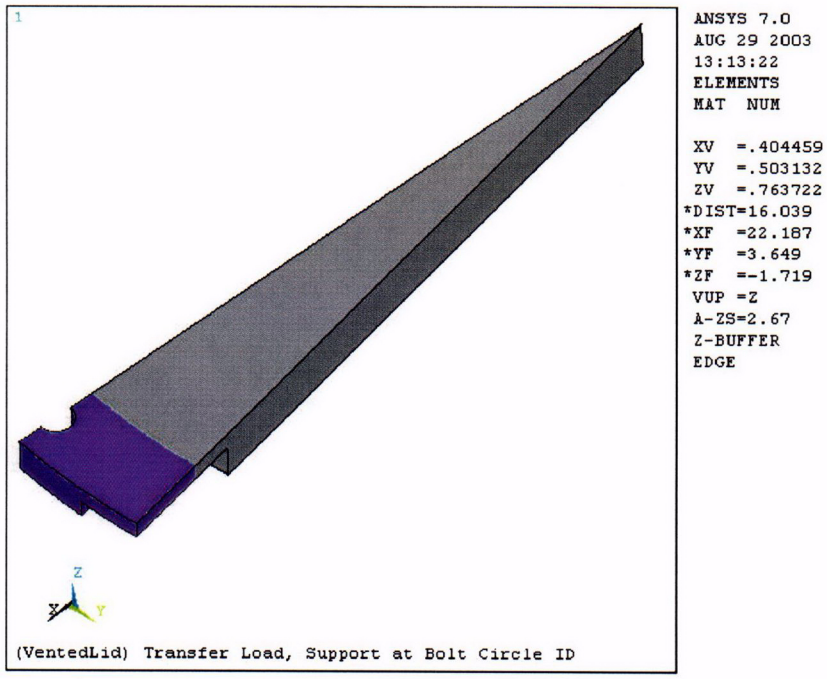

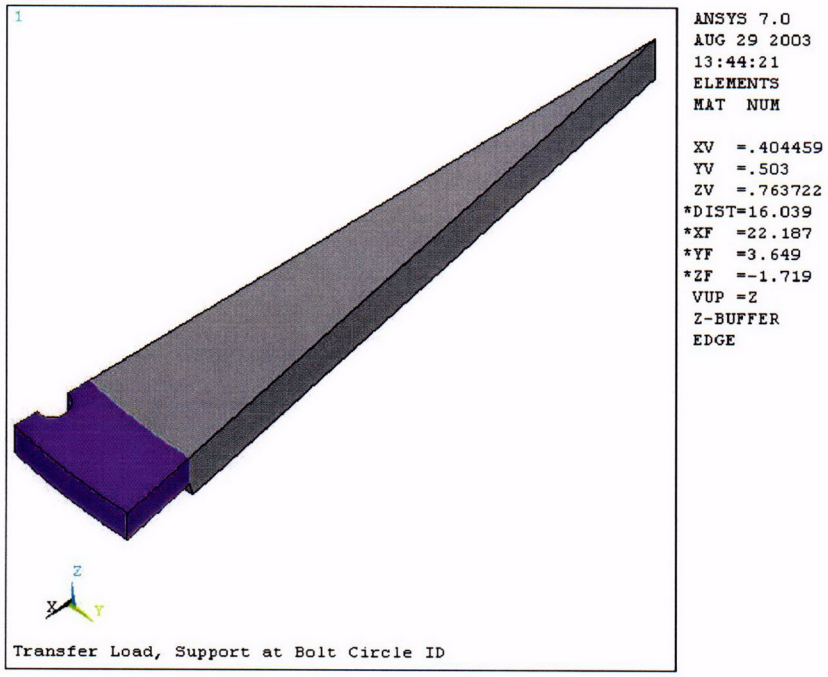

Figure P.3.6-11
OS197FC TC Top Lid (1/32 Segment) ANSYS Models with (Top View) and without (Bottom View) Vent Cutouts

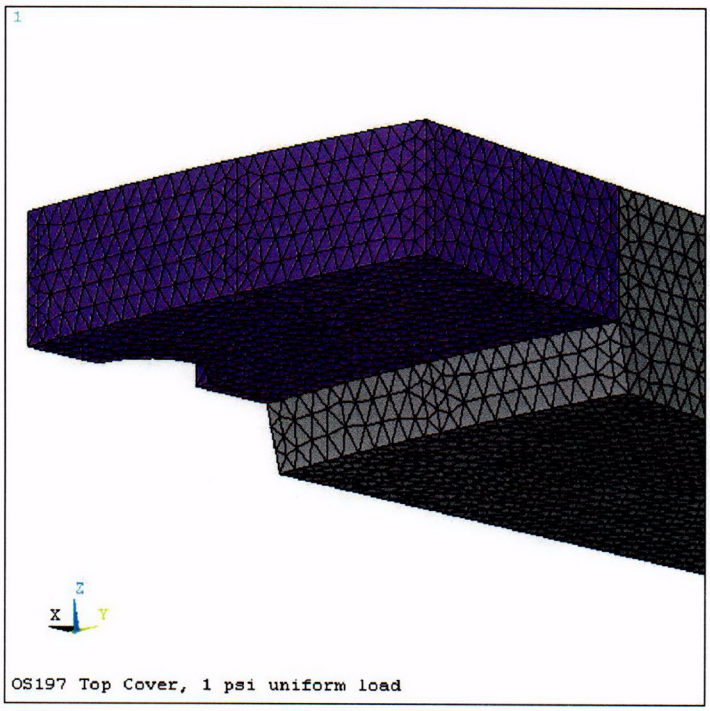

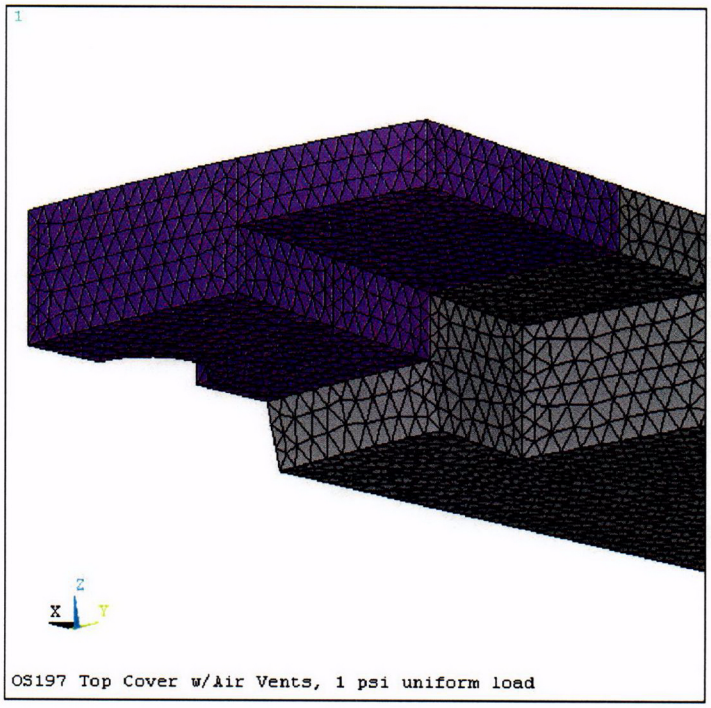

Figure P.3.6-12
Detailed View of TC Lid Model without (Top View) and with (Bottom View) Vent Cutouts

C1D

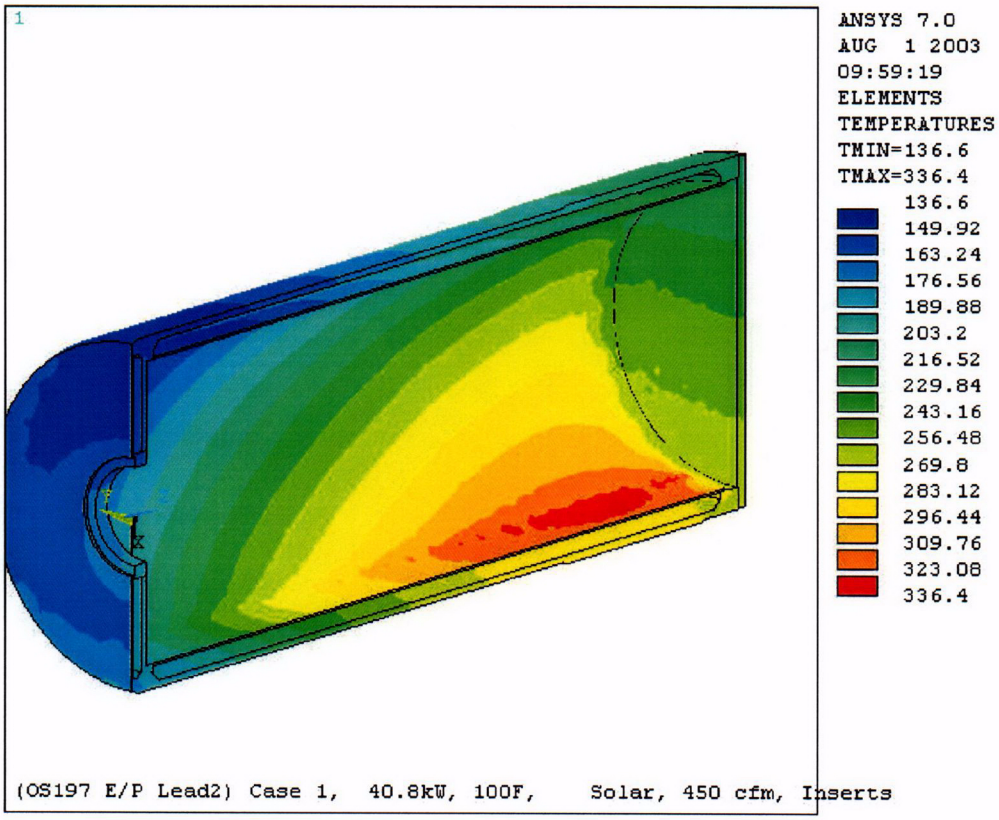

Figure P.3.6-13
OS197FC TC Temperature Distribution for 40.8 kW with Air Circulation

C11

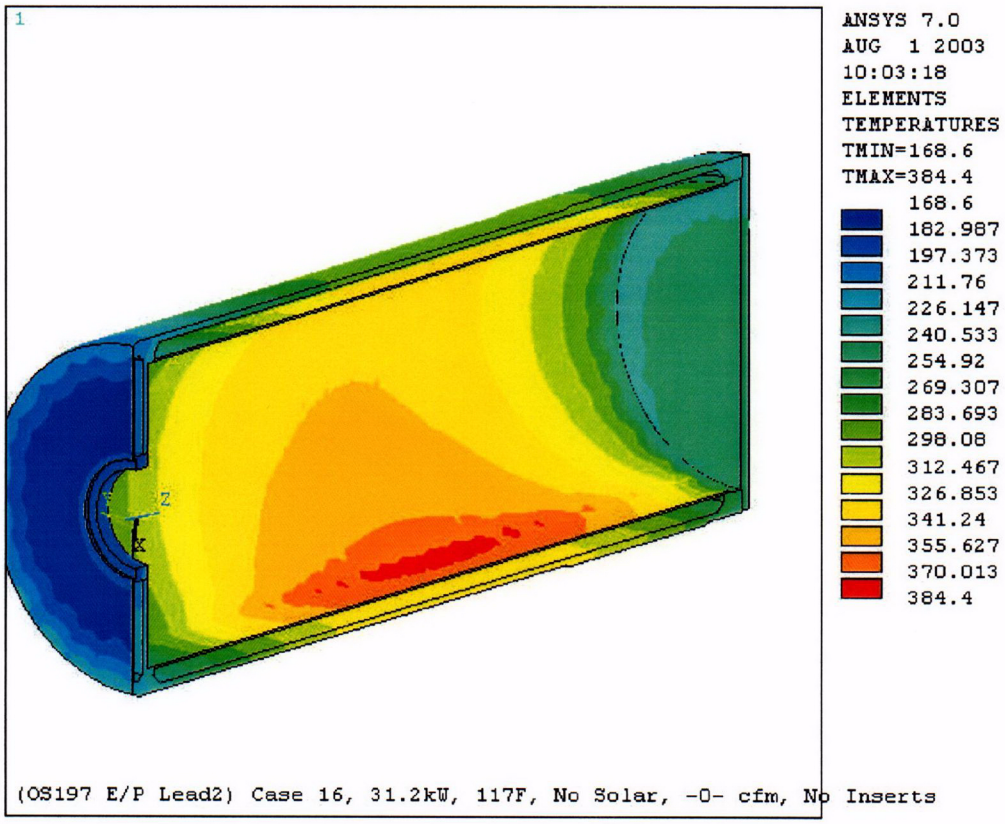

Figure P.3.6-14
OS197FC TC Temperature Distribution for 31.2 kW without Air Circulation

C12

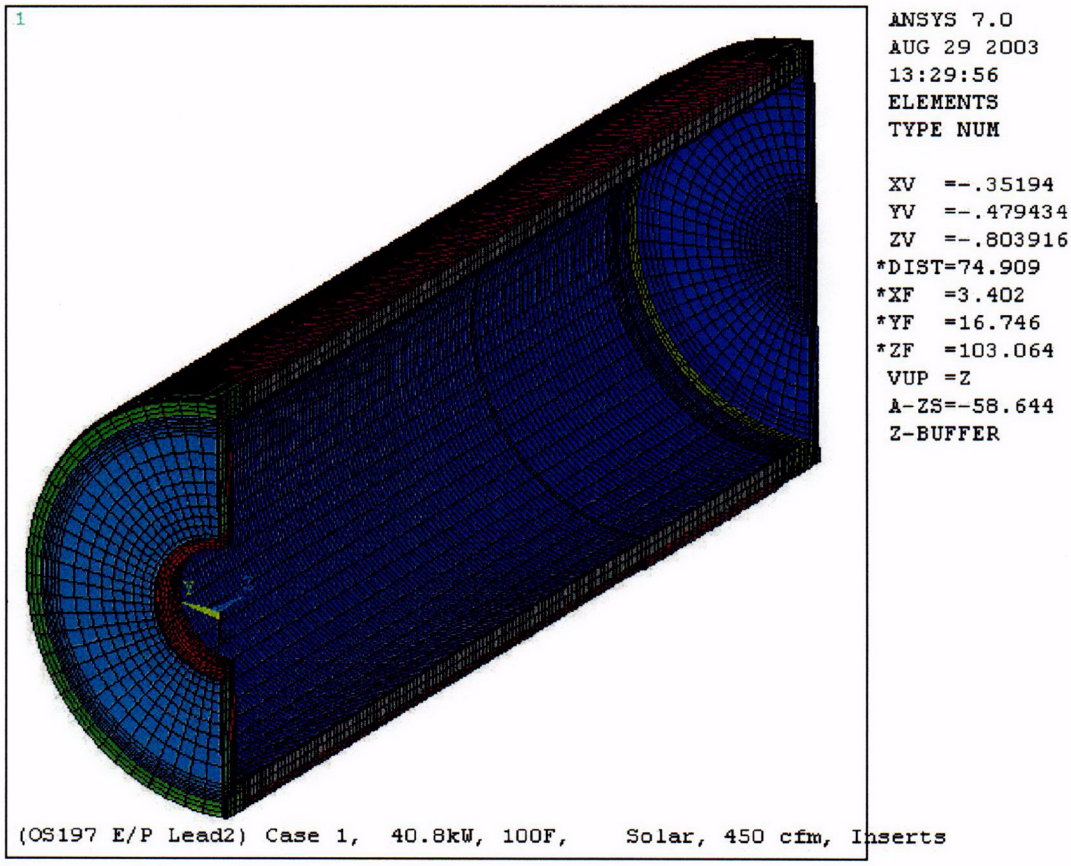

Figure P.3.6-15
OS197FC TC Thermal Stress Analysis Model

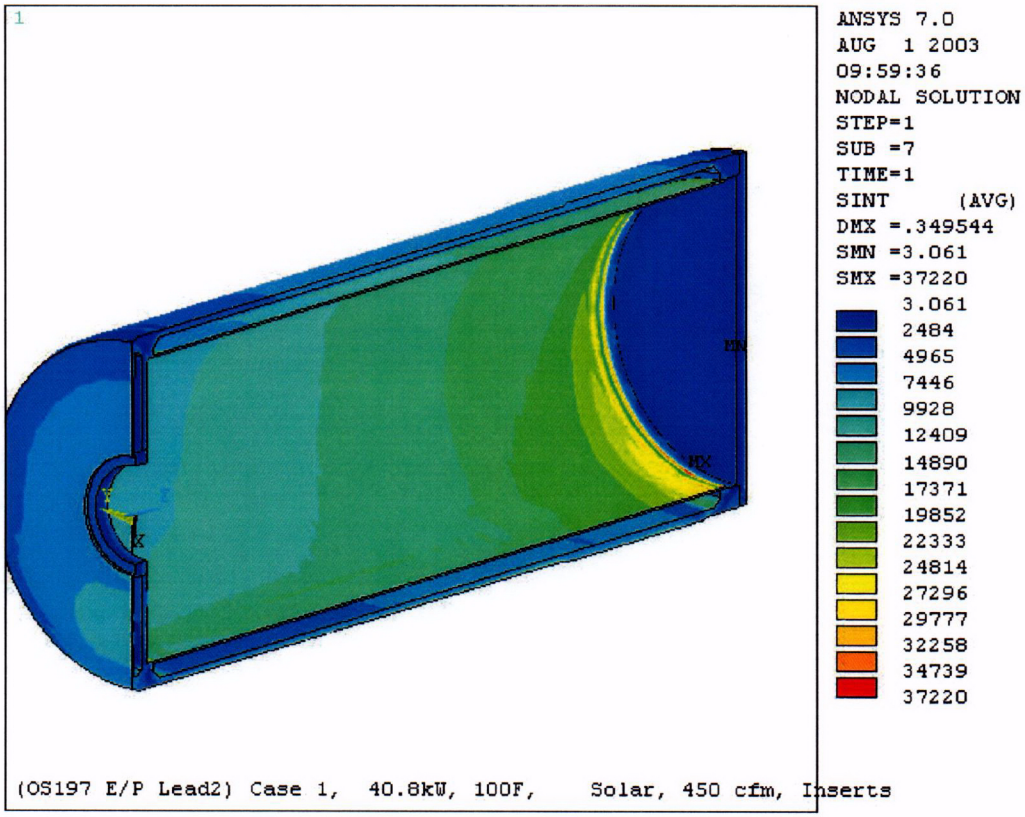

Figure P.3.6-16
OS197FC TC Thermal Stress Analysis Results for 40.8 kW with Air Circulation

C14

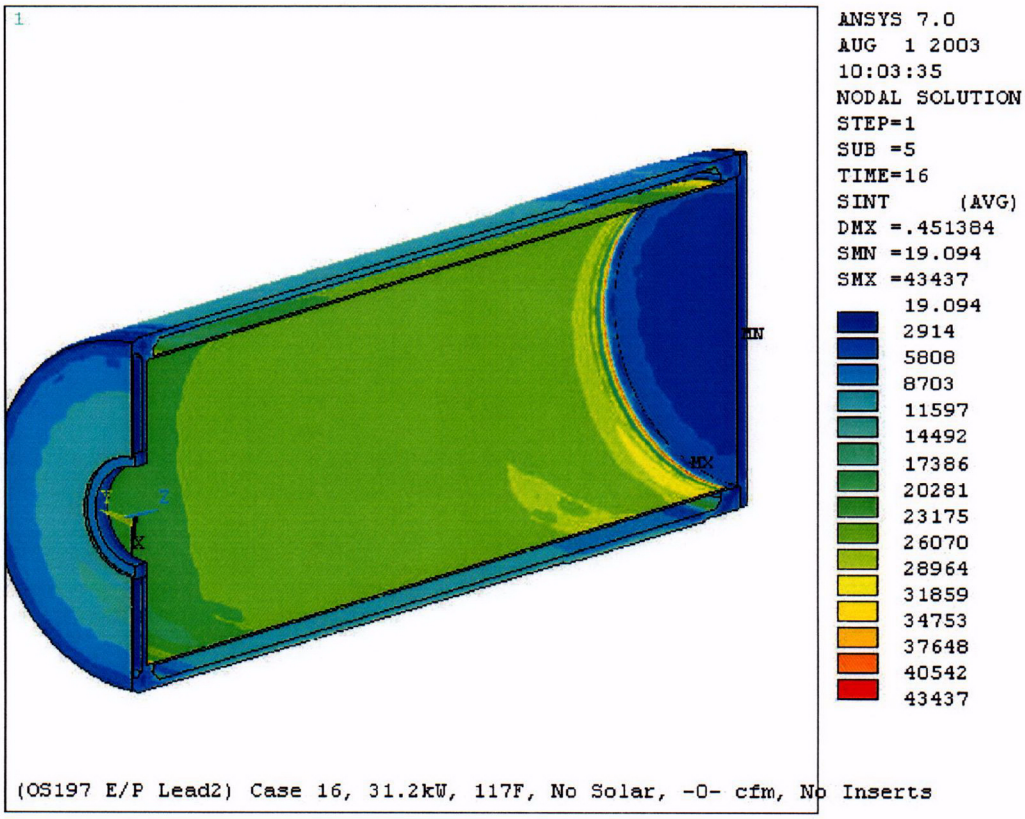

Figure P.3.6-17
OS197FC TC Thermal Stress Analysis Results for 31.2 kW without Air Circulation

C15

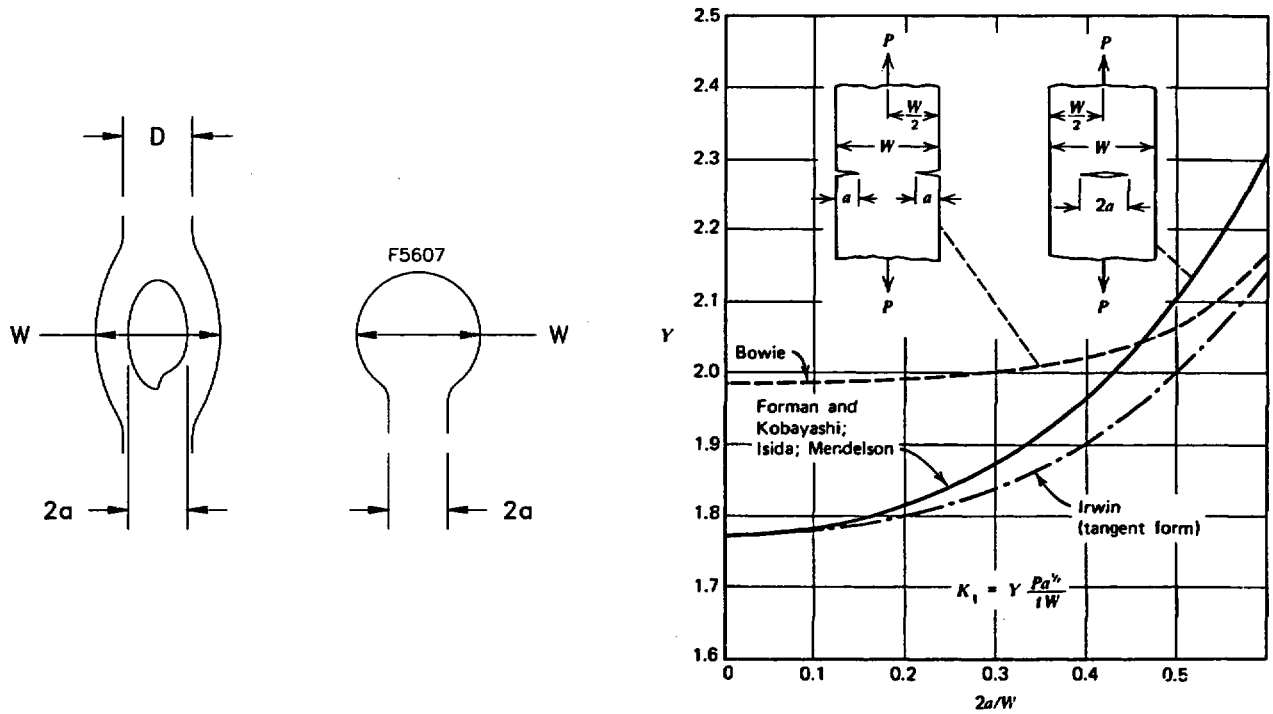

Figure P.3.6-18
Geometry Model #1: Central Crack in Finite Width Under Tension [3.29]

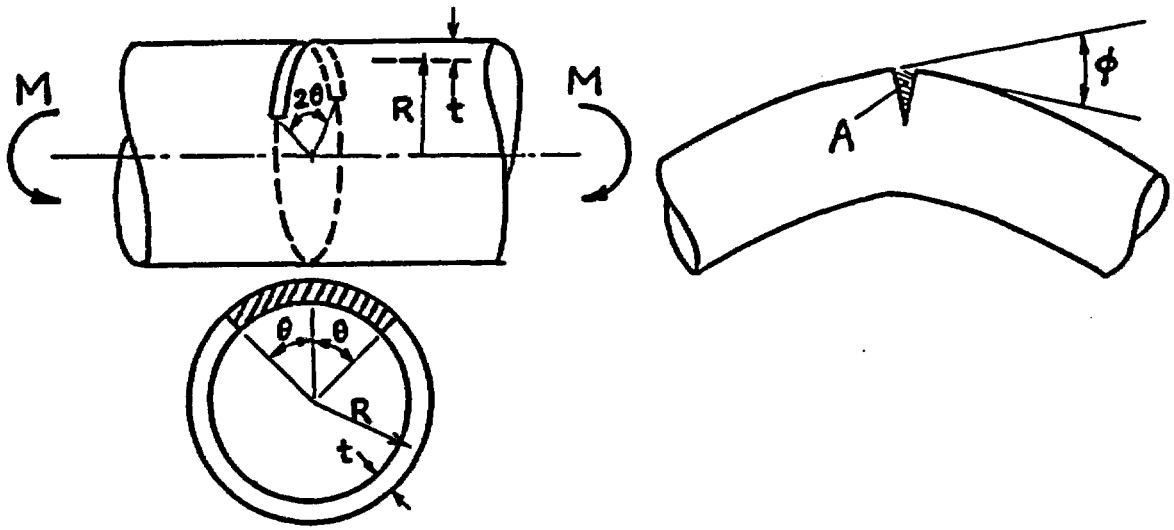

$$\underline{R/t \simeq 10} \qquad (\theta < 110^\circ)$$

$$\sigma = M/(\pi R^2 t)$$

$$K_I = \sigma\sqrt{\pi(R\theta)} \cdot F(\theta)$$

$$F(\theta) = 1 + 6.8\left(\frac{\theta}{\pi}\right)^{3/2} - 13.6\left(\frac{\theta}{\pi}\right)^{5/2} + 20.0\left(\frac{\theta}{\pi}\right)^{7/2}$$

Figure P.3.6-19
Geometry Model #2: Through-Wall Circumferential Crack in Cylinder Under Bending [3.30]