RAS 5907 50-390-CIVP, et al. — Licensee Exhibit 73 - Rec'd 4/25/02

SIGNIFICANT CORRECTIVE ACTION REPORT

SCAR No. S G S C A 9 2 0 0 0 4 Rev. No. 0 / 2

USE AND ATTACH SCAR CONTINUATION SHEETS IF NECESSARY

To be completed by initiator

Dept(s) / Orgs. Affected Chemistry (1B) System(s) 260, 043 (1C) Unit 1+2

Component ID and Description U1+U2 Post Accident Sampling Sys. (1E) Location EL 706 AUX

Requirement Violated NUREG 0737 (1G) ASME Code Related Section ☐ Yes ☐ No ☐ III ☐ XI

Source of Requirement Violated: NUREG 0737 (1J) Reference ____

Description of Condition:

SEE ATTACHED PER # SQPER 920142

DOCKETED USNRC

2003 MAR -4 PM 2:28

OFFICE OF SECRETARY RULEMAKINGS AND ADJUDICATIONS STAFF

Discovery: Date 4-23-92 Time 0700 Method Performance of TI-66.1 (Walk-down, audit, inspection, etc.)

Discovered by GREG TAYLOR Date of Occurence (If Known) NA

Initiating Supv. W T Fucher Date 5/11/92 Phone 6714 Org. CEM

Immediate action(s) taken ☐ Yes ☐ No If yes, document actions on continuation sheet.

2 – By Operations (For operating plants only)

Affects Unit Operability ☐ Yes ☑ No If yes, actions necessary ____

Signature ____ Date ____

3 – By Duty Plant or Licensing Manager as applicable

Deficiency Reportable: ☑ Yes ☑ No Specify See attached copy signed by P. Lydon + M. Lorek on 5/12/92

NT 5/12/92 MS 5/12/92

License Event Report No. ____

Potentially affects operability at other sites ☐ Yes ☑ No Location ____

Signature ____ Date ____

4 – By Management Reviewer

TVA Exh. 73

Meets SCAR Criteria ☑ Yes ☐ No – Justification ____

Process on ACP No. ____

Responsible Organization SQO / CEM (4C) Coordinated with MRC 5/12/92

Interim actions taken ☐ Yes ☑ No If yes, document actions on continuation sheet. PER SQPER 920142

Management Reviewer W. A. Pruett, Jr. Date 5/12/92

19584 (NP 1/92) Template = SECY-028 AA000108 Closure RIMS No. ____ CG 000001 SECY-02

COMMISSION

50-390 CUP Official Exh. No. TVA 73

TVA

IDENTIFIED ✓

✓ RECEIVED ✓

REJECTED

WITHDRAWN

DATE 4/25/02 Witness

BHM

SIGNIFICANT CORRECTIVE ACTION REPORT

Page 1 of ____

SCAR No. SQSCA920004 Rev. No. 0

USE AND ATTACH SCAR CONTINUATION SHEETS IF NECESSARY

To be completed by Initiator

(1A) Plant(s) / Orgs. Affected Chemistry (1B) System(s) 260.043 (1C) Unit 1+2

(1D) Component ID and Description U1+U2 Post Accident Sampling Sys. (1E) Location El 706 Aux

(1F) Requirement Violated NUREG 0737 (1G) ASME Code Related ☐ Yes ☐ No Section ☐ III ☐ XI

(1H) Source of Requirement Violated: NUREG 0737 (1J) Reference ____

(1K) Description of Condition: ____

SEE ATTACHED PER # SQPER 920142

Discovery: Date 4-23-92 Time 0700 Method Performance of TI-66.1 (Walk-down, audit, inspection, etc.)

Discovered by GREG TAYLOR Date of Occurence (If Known) N/A

Initiating Supv. W T Tucker Date 5/11/92 Phone 6714 Org. C&M

Immediate action(s) taken ☐ Yes ☐ No If yes, document actions on continuation sheet.

(2) – By Operations (For operating plants only)

Affects Unit Operability ☐ Yes ☒ No If yes, actions necessary ____

Signature [signature] Date 5/12/92

(3) – By Duty Plant or Licensing Manager as applicable

Deficiency Reportable: ☐ Yes ☒ No Specify LER 30 day Report 50.73 a.2.vi.D Mitigate consequences of accident 5/13/92

License Event Report No. ____

Potentially affects operability at other sites ☐ Yes ☒ No Location ____

Signature [signature] Date 5/12/92

(4) – By Management Reviewer

Meets SCAR Criteria ☐ Yes ☐ No – Justification ____

Tracking on ACP No. ____

Responsible Organization ____ (4C) Coordinated with ____

Interim actions taken ☐ Yes ☐ No If yes, document actions on continuation sheet.

This copy completed description of Step 3

Management Reviewer ____ Date ____

CG 000002

(IIP 1/92)

AA000109

Closure RIMS No.

INCIDENT INVESTIGATION EVENT REPORT

QA Record

CATEGORY 1 ☐
CATEGORY 2 ☒
CATEGORY 3 ☐

II No. II-5-92-08

SQ10030103

Problem Title: Inadequate Setpoint Calculation for Radiation Monitors

Cause Codes CA,CB,CD,CE

LER No. 327/92019

Event Manager Signature R. W. Fatherberry Date 11/24/92

Responsible Organization SQO/PMO

Plant Manager Signature [illegible] Date 12-8-92

Site VP Signature (Category 1 & 2 events) [illegible] Date 12-15-92

QA PROGRAM MANAGER

Problem Resolution Sheet Closeout:

- ☒ Investigation Report distribution listing completed.
- ☒ Open Corrective Action entered into tracking system.
- ☒ Causes entered into tracking system.
- ☒ Report review and approval complete.
- ☒ Open items listing issued to actionees.

TVA Exh. 129

FI000108

CAP Manager Paul L. Shepherd Date 12-17-92

TVA 40202

1 of 102

John M. Stitt, SB 1C-SQN

SEQUOYAH NUCLEAR PLANT - CLOSURE OF INCIDENT INVESTIGATION (II) II592080

All action closure documentation has been reviewed and the actions taken were adequate. (No additional or follow-up actions resulting from evaluations or changes to the II were required.)

R.W. Fortenberry 4/1/93
Event Manager / Date
R.W. Fortenberry

OR

The following information/documentation is required prior to closure of the II.

N/A

Event Manager / Date

PLS:PMB
1163y/15

FI000109

REV 1

CHANGE 2

	PLANT	UNIT	PR IN				

				SQD PMG RMT	SQD WCB TAP
S Q PMG	1 1 INADEQUATE CALIBRATION OF A RADIATION MONITOR THE CHANNEL SPECIFICATION GASEOUS RADIATION MONITORS CO MED PM . AND THEIR SETPOINTS CALCULATED IN A NON-C CONSERVATIVE MANNER. INADEQUATE ENGINEERING CONTRO L OF RADIATION MONITOR SETPOINTS AND SETPOINT METH OD. THE INTERDEPARTMENTAL COORDINATIONS. RESPONS IBIL. FOR THE OVERALL RADIATION MONITORING SYS TEM WERE NOT WELL DEFINED OR UNDERSTOOD .				CATEGORY I, PA - RDR FORTENBER RY

CLOSED. THIS PRT REQUIRES SUBMITTAL TO NRC WITHIN 5 DAYS.

CLOSED	011372	(01)	PDS	PREPARE THE CATEGORY 2 INCIDEN T INVESTIGATION EVENT REPORT A ND OBTAIN APPROVAL SCHEDULE THE PERF ONE DAY BEFORE APPROV AL FORWARD THE APPROVED REPOR T TO THE SITE V.P. 12/22/79-FO R 1/30/80. PDS	011372	SGW PMG RMT	2
CLOSED	011372	(02)		DOCUMENT RAD MONITOR RESPONSIB ILITIES AS INDICATED IN THE IN CIDENT INVESTIGATION EVENT REP ORT IN THE APPROPRIATE PLANT D OCUMENT	011372	SGW ISM WCT	2
CLOSED	011373	(03)	PDS	DOCUMENT RAD MONITOR RESPONSIB ILITIES AS INDICATED IN THE IN CIDENT INVESTIGATION EVENT REP ORT IN THE APPROPRIATE PLANT D OCUMENT.	011373	SGW MTG RDF	2
CLOSED	011374	(04)	PDS	DOCUMENT RAD MONITOR RESPONSIB ILITIES AS INDICATED IN THE IN CIDENT INVESTIGATION EVENT REP ORT IN THE APPROPRIATE PLANT D OCUMENTS.	011374	SGW MTG RDF	2
CLOSED	011375	(05)	PDS	DOCUMENT RAD MONITOR RESPONSIB ILITIES AS INDICATED IN THE IN CIDENT INVESTIGATION EVENT REP ORT IN THE APPROPRIATE PLANT D OCUMENTS.	011375	SGW SEE WRT	2
	011376	(06)	PDS	DOCUMENT RAD MONITOR RESPONSIB ILITIES AS INDICATED IN THE IN CIDENT INVESTIGATION EVENT REP ORT IN THE APPROPRIATE PLANT D OCUMENTS.	011376	SGW LMN WRT	2

PI000110

DESCRIPTION	COMMENTS /	DO BY	DO BY	DO BY

	PANEL	UNIT	ISEQ	ACTION DESC	DUE	ORIG/ORPISP	A STAT
				UPT IN THE APPROPRIATE PLANT D ACCUMENTS			
[illegible]	[illegible]	✓	[illegible]	REVISE TI-16 TO ADDRESS METHOD OF ACCOUNTING FOR GAS DETECTO R CHAMBER VACUUM. (THIS ACTID N IS TRACKED UNDER ACCT2016109 1.)	121192 Y121192	SSG CON WF	
[illegible]	[illegible]	✓	[illegible]	DETERMINE THE BASES FOR VALUES OF TS 3.[illegible].3 AND TABLE 3.3-6 . DETERMINE IF TS CHANGES ARE NECESSARY. R 1/29/93, B1 4-1 .93	041693 Y041693	SGP LMW [illegible]	B2
[illegible]	[illegible]	✓	[illegible]	PROVIDE SSD'S FOR RH WITH TS S ETPOINTS. (E 2-26/93, B1 4/30/ 93, B2 5/20/93)	070193 Y070693	SGP LEE EHT	B2
[illegible]	021693	✓	[illegible]	REVISE THE SSD FOR 1-5 RH HIGH VACUUM HALFDUCTION ALARM FROM A SETPOINT VALUE OF 12 PLUS/M INUS 1 IN HG TO 9 PLUS/MINUS 1 IN HG.	021993 Y021693	SGP LEE JMC	B
[illegible]	060193	✓	[illegible]	DEFINE THE RAD MONITOR SAFETY LIMITS FOR THE RAD MONITORS IN TECH SPEC 3.3.3.1 AND TABLE 3 .3-6.	061393 Y060193	SGP LMW [illegible]	B
			[illegible]	PREPARE CLOSURE PACKAGE FOR TH E EVENT MANAGERS VERIFICATION.	092293	FRG DLB JMG	A

SUB. TOTAL: 1 ITEMS

REPORT TOTAL: 1 ITEMS

FI000111

INCIDENT INVESTIGATION FORM

II No. 0-92-0

Location: (Plant Units) SQN U1/U2 Event Time: (Date/Time) Discovery Time: (Date/Time) 11/6/92

INITIATOR

Initiator Name: T.A. PANNELL Organization: OPS Extension: 780

Description of Problem: INADEQUATE RAD MONITOR VACUUM SWITCH CALIBRATION

Activities in Progress:

SUPERVISOR

Proposed Category? ☐ 1 ☑ 2 ☐ 3 ☐ Deliver to SOS ☐ N/A

Initiator's Supervisor R.J. BEECKEN Organization PM Extension: 6501

Cause (if known)

Corrective Action Plan:

Plant Condition at Discovery 100% PWR Documents Initiated SQ PER 92-0335

SOS

Determination Operability Affected ☐ Yes ☒ No

Comments: The "found" condition based on a walkdown of all radiation monitors revealed the present operability of any monitor was unaffected.

Shift Operations Supervisor Date/Time 11-9-92 1200

PLANT MGR

Reportability Determination

☑ Notification Required Continue to pursue as cat II to confirm.

☐ Corporate Notification Required Date/Time call made

☐ NRC Notification Required per 10 CFR 72 Date/Time

☑ NRC Notification Required per 10 CFR 73 (a)(i)(B) 11-25-92 1800 Date/Time

☐ Other Notification Required (specify)

☐ Tech. Spec. Action Entered Date/Time

Investigation Responsibility Category ☐ 1 ☑ 2 ☐ 3

Investigation Required

Event Manager R. FORTENBERY Report Due Date

Team Members R.F. Richie J.K. Newton K.E. Meade

☐ Problem Not Valid - Return to Corrective Action Manager

Plant Manager Date: 11/9/92

EV.

Identify Appropriate Immediate Actions:

1. Verified all affected Monitors were at ≤ 10" Hg O Vacuum.
2. Monitor Vacuum on all affected monitors each shift
3. Change Alarm [illegible] to ≥ 9" Hg O Vacuum.

Action Complete

FI000115

EVENT TITLE: Inadequate Setpoint Calculation for Radiation Monitor

EVENT TEAM*				ROOT CAUSE ANALYSIS TRAINING		
POSITION	NAME	ORGANIZATION	EXT.	TVA RCA	K-T	HPES
EVENT MANAGER	R.W. Fortenberry	Plt Staff	8704	X	X	X
LEAD INVESTIGATOR						
TEAM MEMBER	Jeff Newton	Tech Supp/ICE	7681			
TEAM MEMBER	Don Amos	Chemistry	6930			
TEAM MEMBER	Calvin Burrell	NE	8480			
TEAM MEMBER						
TEAM MEMBER	Ken Meade	LICENSING*	7766	Mort		

*NOTE: EVENT TEAMS WILL INCLUDE A MEMBER FROM LICENSING (EXT. 8924) FOR REPORTABLE EVENTS AND AN HPES QUALIFIED EVALUATOR FOR ALL CATEGORY 1 EVENTS.

INVESTIGATION PLAN:

1. Trace History of RM setpoints to determine times and amount of Tech Spec non-compliance - Don Amos
2. Review plant Rad Monitors and use of vacuum correction to determine Scope of Condition - Jeff Newton
3. Perform NER, LER and TROI database searches to look for similar or related events. - Ken Meade
4. Assess the Safety implication of Tech Spec non-compliance
5. Determine if SQN has ever exceed ODCM release rates as a result of RM setpoint above TS limit - Don Amos.

F100013C

APPROVALS:

(CATEGORY 1&2 REPORTS - PLANT MANAGER)
(CATEGORY 3 REPORTS - EVENT MANAGER)

FILE INSTRUCTIONS: MAINTAIN WITH ORIGINAL II PACKAGE

Incident Investigation Inadequate Setpoint Calculation for Radiation Monitors

II No. II-S-92-080

Event Manager R. W. Fortenberry Date Received 11/24/92

Responsible Training Manager Roy G. Goodman Section Technical

Date and Location of PERP (Cat. 1 or 2) 11/24/92 3:00 pm

Has training been conducted in the area that contributed to the event? Yes ☑ No ☑

Was a train task associated with this event? Yes ☑ No ☐

If yes,

Identify all applicable training materials (classroom, simulator, laboratory, OJT). Sign off for sampling monitors

Were personnel involved in the II trained? Yes, in sampling & counting.

Were all section personnel trained and over what time period? Yes, in the ~~same time~~ initial place

If testing was involved, did it aggressively survey issue? No, vacuum change was not in procedure.

Was training material adequate or does material need to be revised? No, does need to be revised to include pressure changes

Do personnel need to be retrained? Yes

Should requalification training be initiated? Yes, cover TE 82-49, seminar to include Operation of monitors, Gas Laws, and effect of changes on chamber pressures/sensitivities on sample results

If no, is training needed?

Course or training setting affected

Personnel affected

Appropriate action/date(s)

Are simulator changes necessary? Yes ☐ No ☑

FI000114

Comments/recommendations

REVIEW & ASSESSMENT

APPROVAL

Section Manager Responsible for Attending PERP: Operations ☐ Maintenance ☐ Technical ☑

Section Manager Roy G. Goodman Date 11/24/92

Date

EXECUTIVE SUMMARY

On November 6, 1992 it was discovered that certain Technical Specification Gaseous Radiation Monitors could have had their setpoints calculated in a non-conservative manner. The subject Radiation Monitor setpoints do not account for the system design which has the gas sample chamber upstream of the sample pump, thus creating a vacuum in the detector gas chamber. This pressure difference requires a correction factor to be applied in order to calculate the setpoint. Applying the correction factor to several Radiation Monitors indicates the actual setpoints could have been greater than the Technical Specification Allowable Setpoints specified in TS 3.3.3.1.

A related and concurrent event identified in the Problem Evaluation Report SQP900281PER indicated non-conservative vendor calibration data had been used in the calculation of these same Radiation Monitor setpoints. This, when combined with the failure to account for detector pressure in the setpoint calculation, compounded the error.

Since the action of TS 3.3.3.1 was not applied, it is concluded that SQN was in a condition prohibited by Technical Specification. Upon discovery plant personnel took readings at the Radiation Monitors to ensure they remained within their Technical Specification Allowable Setpoints. The Instrument Malfunction alarms were then calibrated lower on the subject Radiation Monitors to ensure Technical Specification compliance.

The root cause of this event is inadequate engineering control of Radiation Monitor setpoints and setpoint methodology. Contributing causes were failure of management to ensure that adequate interdepartmental communications existed and responsibilities for the overall Radiation Monitoring System were not well defined or understood.

FI000115

DESCRIPTION OF THE EVENT

A. Initial Conditions

On November 6, 1992 it was discovered that certain Technical Specification (TS) Radiation Monitors (RM) could have had there setpoints calculated in a non-conservative manner. The subject RM setpoints do not account for the system design which has the gas sample chamber upstream of the sample pump, thus creating a vacuum. The original gaseous calibration by the manufacturer was performed at atmospheric conditions. The operating pressure difference requires a correction factor to be applied in order to calculate the correct setpoint for the RM's.

Units 1 2 re operating at approximately 100% rated thermal power. The Noble Gas alarm/CRI setpoints of the Containment atmosphere monitors RM-90-106 and 112 and the Containment Purge monitors RM-90-130 and 131 were at 75% of the Technical Specification (TS) limit. The high vacuum malfunction alarm for the subject RMs was set at 12 ± 1 inch of Mercury (IN Hg) below atmospheric pressure. There was no pressure correction applied to the Noble gas monitor Containment Vent Isolation (CVI) setpoint. Assuming the vacuum could be as high as 13 IN Hg without requiring operator action or initiating a CVI, the setpoint could be 113% of the TS limits of TS 3.3.3.1.

B. Sequence of Events

The Chemistry Section procedure TI-18, Radiation Monitoring, is the procedure for controlling and calculating the alarm setpoints for RMs. The General Atomics (GA) 1974 Calibration Report provided the detector sensitivity values for the initial developement of this procedure. The initial procedure, TI-18, set the CVI setpoint at 10% of the TS limit for both the particulate and Noble gas detectors for containment atmosphere monitors RM-90-106 & 112. The containment purge Noble gas monitor RM-90-130 & 131 CVI setpoint was set at 10% of the TS limit. This was sufficient margin to compensate for gas detector chamber pressure errors and for the use of non conservative gas detector GA calibration sensitivities.

Initially, TI-1 set the Main Control Room (MCR) Noble

gas monitors RM-90-125 & 126, setpoint at 350 counts per minute (cpm). The TS limit is 400 cpm. When corrected for the highest possible vacuum prior to alarming, the CPT setpoint could have been 529 cpm.

April of 1979 GA issued a revision to the Calibration Report. This report reduced the sensitivities for the gas detector making the earlier sensitivities non-conservative. The report was issued to the Engineering Design Organization in Knoxville. The plant instrument engineer eventually received a copy of the report, but the Chemistry Section never received a copy.

On April 28, 1982 revision 10 to TI-18 raised the Noble gas CVI setpoint on RM-90-106, 112, 130, and 131 to 40% of the TS limit. When this setpoint is corrected for non-conservative detector sensitivities and chamber pressure, the CVI could have occurred at 93% of the TS limit.

The NRC issued Notice 82-49, Correction For Conditions For Air And Gas Monitoring. This notice identified that pressure correction is necessary to account for sample deviation from Standard Temperature and Pressure (STP) conditions in gas detectors and rotometers. The notice was entered into the Nuclear Experience Review (NER) process and sent to all appropriate organizations. The Instrument Maintenance Group responded that the calibration of the RM rotometers sample flow was corrected for pressure. The Chemistry Section responded that analyst take into account pressure differential within monitors when collecting particulate and charcoal samples. No one addressed the effects of pressure on the RM Noble gas detectors. No corrective action was identified.

In 1986 and 1987 a Surveillance Instruction verification and validation program was established to ensure the complete accuracy and validity of all plant procedures used to comply with the TS. Watts Bar Plant personnel were acquired to perform this review for Sequoyah. The April 1979 revision to the GA Calibration Report was identified. The revised report was included in the references section of TI-18, but the revised detector sensitivity values were not entered into the procedure.

On April 16, 1990, Instruction Change ICF-90-217 changed the Noble gas CVI setpoint to RM-90-106 and 112 to 70% of the TS limit and removed the setpoints to RM-90-130 and 131 from TI-18. ICF-90-[illegible] added the CVI setpoints for RM-[illegible]-130 and 131 to S[illegible], Containment (Upper, Lower) Purge and raised the gas CVI setpoint to 70% of

FI000117

the TS. On April 26, 1992 the setpoints in the above monitors were raised to the values allowed by the procedures. When the setpoints are corrected for the non-conservative detector sensitivities and chamber pressure, the alarm could have occurred at 143% of the TS limit.

On June 12, 1990 A Problem Evaluation Report, SQP900281PER was issued by the Chemistry Section identifying that the April 1979 GA Calibration Report had not been implemented in plant procedures. An operability evaluation determined that the current Noble gas CVI setpoints for the RM-90-106, 112, 130, and 131 were at 95% of the TS limit. This operability evaluation was based on the current containment atmospheric isotope mix, best estimate isotope sensitivities obtained from the 1979 GA Calibration Report, and current CVI setpoints of 70% of the TS limit. When the CVI setpoint is corrected for detector chamber vacuum, the CVI could have occurred at 143% of the TS limit.

On December 27, 1990 SI-410.2 revision 12 and TI-18 revision 2 were issued. These procedure revisions included the detector sensitivities from the April 1979 GA Calibration Report and raised the Noble gas CVI setpoint to 75 of the TS limit. The sensitivities were about 5% less than t used in the SQP900281PER operability evaluation because a more conservative approach was used in interpreting the GA calibration data. However, when the Noble gas setpoint were further corrected for chamber pressure, the CVI could have occurred as high as 113% above the TS limit.

Revision 24 to TI-18 also lowered the CRI setpoint on the Main Control Room Noble gas monitors RM-90-125 and 126 to 253 cpm. When this setpoint is corrected for chamber pressure, the monitor could CRI as high as 382 cpm. his is less than the TS limit of 400 cpm.

C. Immediate Corrective Actions

Based on a table, "Correction for Sample Chamber Pressure", provided by the vendor for the model RD-52 gas detector the System Engineer determined that if the Noble gas detector chamber vacuum did not exceed 10 IN Hg below atmospheric pressure, there was sufficient margin in the CVI setpoint to accommodate the chamber vacuum error. This option was chosen over reducing the monitor CVI setpoint, because lowering the CVI setpoint would increase the chances of initiating a CVI. The following actions were initiated:

FI000118

1. The vacuum in RM-90-106, 112, 130, 131, 125, and 126 were immediately verified by the System Engineer to be less than 10 IN Hg.
2. The MIG Group initiated a program of reading the vacuum on the above monitors twice per shift to verify the vacuum to be less than 10 IN Hg.
3. The MIG procedures SI-302 and SI-302.2 were revised to lower the vacuum alarm setpoint to 9 ± 1 IN Hg.
4. The performance of SI-302 and 302.2 with the revised vacuum alarm points was completed on November 14, 1992 and the twice per shift reading of the RM vacuum levels was suspended.

. ANALYSIS OF THE EVENT

A. Evaluation of Plant Systems and Components

The two problems identified in this incident investigation, non-conservative Noble gas detector sensitivities and no correction for gas chamber pressure, are applicable to all GA model RD-32 Noble gas detectors. the specific monitors are as follows:

1,2-RM-90-99
0-RM-90-101B
1,2-RM-90-106B
1,2-RM-90-112B
0-RM-90-118
1,2-RM-90-119
0-RM-90-125
0-RM-90-126
1,2-RM-90-130
1,2-RM-90-131
0-RM-90-132B
0-RM-90-205
0-RM-90-206

TS monitors

The MCR Noble gas monitors RM-90-125 and 126 were initially calibrated with the CRI setpoint at 350 cpm. When this value is corrected for gas chamber pressure, the CRI could occurred at 529 cpm. TS CRI setpoint is 400 cpm. This out of TS condition existed from initial licensing on unit 1 to December 27, 1990 when the CRI setpoint was reduced to 253 cpm (382 cpm when corrected for chamber pressure).

The containment atmosphere monitors, RM-90-106 and 112 CVI setpoints were initially at 10% of the TS limit. The

FI000119

containment purge Noble gas monitors RM-90-130 and 131 CVI setpoints were also initially at 10% of the TS limit. Though the Noble gas CVI setpoints were raised to 40% of the TS limit in 1982, sufficient margin still existed to accommodate the use of non-conservative detector sensitivity values and applying no correction for gas chamber pressure. On April 26, 1990 the CVI setpoint for these detectors were raised to 70% of the TS limit. Late in 1990 the CVI setpoint was raised to 75% of the TS limit. At this point sufficient margin no longer existed to bound the above errors. These monitors remained outside the TS limits of TS 3.3.3.1 until November 6, 1992, when the gas chamber vacuum was verified manually to be less than 10 IN Hg below atmosphere. The vacuum was continued to be verified less than 10 IN Hg twice per shift until the high vacuum alarm setpoint was changed to 9 ± 1 IN Hg.

Though the other monitors shown in the above list could also have non-conservative alarm setpoints, they are not TS monitors. They monitor effluent stream, but have never been used to quantify Offsite Dose Calculation Manual (ODCM) effluent releases. All ODCM effluent releases are quantified samples analyzed in the Chemistry Laboratory test equipment.

The Particulate and Iodine monitors were calibrated with a solid source as opposed to a gas source for the gas monitors. Also, flow through the charcoal and particulate filters is and always has been adjusted to Standard Cubic Feet Per Minute (SCFM). The CVI setpoint for the RM-90-106, 112, 130, and 131 particulate monitors has always been maintained at less than or equal to 40% of the TS limit. Thus, sufficient margin has always existed.

There is an Eberline Noble gas detectors on the Condenser exhaust. This detector is not corrected for chamber pressure. The Eberline detector operates with a positive pressure in the chamber. Therefore, the RM output would be conservative.

There is a Sorrento Noble gas detector on the shield building exhaust. These detectors are digital detectors that have internal compensation for the detector chamber pressure.

INSTRUMENT INACCURACIES

Per Memorandum "STATE LICENSING POSITION ON INSTRUMENT INACCURACIES" (RIMS S10 1 0878), SQN Licensing position on the significance of instrument inaccuracies in

FI000120

selecting Technical Specification (TS) surveillance acceptance criteria can be based on quantitative evaluation of the margin available in each analysis. Determinations could then be made as to whether or not sufficient margin already exists in the safety limit determined by analysis to bound instrument inaccuracies.

0-RE-90-125 & 126

Per GDC 19, the exposure limit for control room personnel must not be in excess of 5 rem whole body, or its equivalent to any part of the body, for the duration of the accident. The 400 cpm TS limit is equivalent to 1.76E-5 μCi/cc. Using Xenon-133 the dose rate to control room personnel would be 0.614 mrem/hr or [illegible] rem for 100 days.

1,2-RE-90-106, 112, 130 & 131

Per 10CFR20, no individual shall receive a dose to the whole body in any period of one calendar year in excess of 0.5 rem. The TS Radiation Monitoring setpoint is based if [illegible] continuously Purged 24 hours a day/365 days a year [illegible] would not exceed the 10CFR20 limit. However, T[illegible] (3.6.1.9) only allows each unit to Purge for [illegible] hours per year. Therefore, there is significant margin in the setpoint to bound the instrument inaccuracies.

This demonstrates that there [illegible] sufficient margin in the development of the TS limit to encompass instrument inaccuracies.

B. Evaluation of Personnel Performance

The evaluation of the NRC IE N[illegible]ice 82-49 was evaluated in part by several organizati[illegible] The Instrument Maintenance Group evaluated [illegible]ect of vacuum on rotometer indications. They concl[illegible]ed they already corrected rotometer [illegible]ding for va[illegible]m to obtain SCFM values. The Chemistry Section eva[illegible]ated the effects of vacuum on the charcoal, [illegible]articulate, and gas samples obtained for analy[illegible]s in the lab. Though, TI-18 states that the Chemistry [illegible]ection is responsible for the Alarm setpoints for all RMs, they did not evaluate the effects of vacuum on the RM gas detectors.

In the 1986-1987 time frame, a program was instituted to [illegible]rify and validate all procedures used to ensure TS [illegible]mpliance. The requirements of the program were that

F1000121

all methods, techniques, calculations and requirements were to be traced to there source document. The engineers who evaluated TI-18 found the revised GA Calibration Report issued in April 1979, but did not include the revised sensitivities into the procedure. There is no indication that the NRC IE Notice was included in the review. The procedure was not revised to include as pressure correction allowance in determining gas detector setpoints.

On April 16, 1990 TI-18 and SI-410.2 were revised to raise the Noble gas CVI setpoint on RM-90-106, 112, 130, and 131 to 70% of the TS limit. The procedure review and revision process and the 10CFR50.59 process failed to identify the needed gas detector pressure correction and the use of old non-conservative detector sensitivity values. Though there were other procedure changes that also failed to identify these deficiencies, the significance of the April 1990 changes are they allowed the p. t to exceed the TS limits of TS 3.3.3.1.

C. Safety Consequences and Implications

As stated above, 1 & 2-RM-90-106 and 112, 0-RM-90-125 and 126 and 1,2-RM-90-130 and 131 were out of calibration such that their respective TECH SPEC dose limits during containment purging operation could have been exceeded. However, due to the reactor coolant gross activities during this time period and shield building vent monitors, there is a high level of confidence that the TECH SPEC dose limits would not have been exceeded in the event of a design basis accident or operational transients during containment purging. Justification to support this position is provided below.

EVENTS EVALUATED

The reactor coolant activities during the period of time the radiation monitor setpoints were out of specification will have a big impact on the radiation dose to the environment. Therefore, this evaluation will analyze the impacts of a Large Break LOCA, Small Break LOCA, and RCS Leakage, during containment purging activities with the subject radiation monitor out of calibration. In addition to these events the Fuel Handling Accident inside containment was evaluated. These conditions constitute the most limiting events for the subject radiation monitors being incorrectly setup.

LARGE BREAK LOCA

FI000125

In the event of a LBLOCA, a safety injection signal would be generated 2.7 seconds Reference FSAR Table 15.4.1-7. This signal will initiate a containment isolation signal resulting in the activation of the Main Control Room Emergency Ventilation System (MCREVS) and the closure of the containment purge isolation valves. SI-166 documents the maximum allowable stroke time for the containment purge isolation valves (1 & 2-FCV-30-7 through 10, 14 through 20, 37, 40, 50 through 53, 56 through 59) as 4 seconds. FSAR Table 15.4.1-1a indicates the earliest nuclear fuel rod burst will not occur until 50.7 seconds. Therefore, only normal reactor coolant activities, not design basis activities, would be released into containment at the time of containment isolation. It is noted in this scenario that MCREVS activation and containment isolation would have been achieved successfully without the use of RM-90-106, 107, 125, 126, 130, and 131. It is concluded that this scenario would not have resulted in an unanalyzed conditions in the LBLOCA analysis provided in FSAR 15.4.1 or the Environmental Consequences of a Postulated LOCA provided in FSAR 15.5.3.

SMALL BREAK LOCA

In the event of a SBLOCA, a safety injection signal would be generated 58 seconds for a 2 inch break Reference FSAR Table 15.3.1-1. As mentioned above, this signal would result in the activation of the MCREVS and the initiation of a containment isolation signal without the use of RM-90-106, 112, 125, 126, 130, and 131. Also in this scenario, only normal reactor coolant activities would be released into containment at the time of containment isolation; see FSAR Table 15.3.1-1. It is concluded that this scenario would not have resulted in an unanalyzed conditions in the SBLOCA analysis provided in FSAR 15.3 or the Environmental Consequences of a Postulated LOCA provided in FSAR 15.5.3.

CALCULATED RCS LEAKAGES

SQNAPS3-063, Offsite and Control Room Operator Dose Due to a Small Line Break LOCA, calculated radiation doses at the site boundary, low population zone, and the control room operator in the event of a 4 inch small break LOCA. "For simplicity this calculation assumed the leakage from containment went directly to the environment for the entire 30 day time period (no EGTS). This leads to very conservative results as there is no hold up, dilution, deposition, and filtration of the radioisotopes considered as they are released from containment. It was

FI000322

also assumed that there was no failed fuel" resulting from the SBLOCA. The source terms used in this analysis were taken from ANSI/ANS-18.1/1984, Radioactive Source Term For Normal Operation Of Light Water Reactors, which were used to determine the expected reactor coolant activities. It is noted this methodology has been incorporate into SQN design basis calculation SQNAPS3-047, Reactor coolant Activities In Accordance With ANSI/ANS-18.1/1984. Clearly, these assumptions bound the scenarios in question including RCS LEAKAGE during plant operations. The results of this analysis are provided below in REM.

Type of Radiation	Control Room Operator Dose	30-Day Low Population Zone	2-Hr Site Boundary
Gamma	7.19E-05	1.31E-02	1.10E-02
BETA	3.92E-04	3.68E-04	3.03E-03
Inhalation	5.43E-02	1.58E-01	1.31E+00

The control room operators will receive doses much less than the 10CFR50 GDC 19 criteria of 5 rem whole body, 30 rem beta, and 30 rem thyroid. The calculated 2 hour Site Boundary and the 30 day Low Population Zone doses are well within the NRC 10CFR50 GDC-19 and 10CFR100 limits.

ACTUAL RCS ACTIVITIES

Thus far in this evaluation it has been determined only normal reactor coolant activities would have been released into containment up to the time the safety injection signal would result in the activation of the MCREVS and the initiation of a containment isolation signal independently of the subject radiation monitors. Therefore, the radioisotopes associated with only normal reactor coolant would be mixed in containment purge effluent. Subsequently a review of actual RCS source terms continuously being circulated in the RCS primary coolant and interconnecting systems during routine plant operations was warranted This task required a review of SI-54 , Reactor Coolant E-Bar Determination data to evaluate SQN RCS actual gamma activity for normal plant operations over the past 12 years. This data was compared to the gamma activity provided in ANSI/ANS-18.1/1984. The attached graphs, Figures 1 and 2, reveal SQN Units 1 and 2 actual gamma activities are bounded by the expected primary coolant activities in ANSI/ANS-18.1/1984. This trending indicates the plant has operated within 33% of the ANSI/ANS-18.1/1984 RCS gamma activities.

FAILED FUEL REPORTS

F1000124

Since SQNAPS30047 assumes the dose rates from the plants components were based on an assumed 0.125% failed nuclear fuel per reactor core, it was prudent to review and compare the SQN nuclear fuel performance report following each refueling to the calculated values of failed fuel.

Given below are the actual numbers of failed fuel obtained from SQN Fuel Performance Summary Reports

CORE RELOAD	UNIT 1 FAILED FUEL	UNIT 2 FAILED FUEL
CYCLE 1	5	4
CYCLE 2	5	4
CYCLE 3	2	6
CYCLE 4	6	7
CYCLE [illegible]	6	1

The above data show a maximum of 7 failed fuel rods is bounding for SQN to date. SQN FSAR Table 4.1-1 indicates the reactor core contains a total of 50,952 fuel rods. Therefore, SQNs actual worse case failed fuel ratio is [illegible]001374 which is bounded by a factor of 9 by the assumed 0.125% failed fuel rods. This trending indicates the plant has operated with a reactor core better than expected by the industry standards.

FUEL HANDLING ACCIDENT

In the event of a FHA inside containment during containment purging operations, the radioisotopes from the accident would be exhausted through the containment purge ducts. The containment purge ducts houses the Shield Building Vent Radiation Monitors located down stream of the Containment Purge Radiation Monitors. These monitors do not provide a safety control function however, they do provide an alarm and indication in the main control room at 10[illegible] (31100 microCi/sec) of the ODCM or TECH SPEC value based on Xe-133, reference TI-18, Radiation Monitoring. As mentioned earlier, the Containment Purge Monitors were incorrectly calibrated at 75% of this value. Therefore, the operator would have been alerted to take the correct actions to mitigate the event. Furthermore, during nuclear fuel movement, TECH SPEC 3/4.9.5 requires direct communications be maintained between the main control room and the operators at the refueling station. This requirement is administratively

F100021

controlled via FHI-7, Refueling Operation.

FSAR 15.5.6, Environmental Consequences of a Postulated Fuel Handling Accident was performed in accordance with REGUIDE 1.25. One the assumptions provided in REGUIDE 1.25 requires all activity is assumed to be released over a two hour time period. The results of this analysis indicates the doses are less than the 10CFR100 values of 300 rem to the thyroid and 25 rem to the whole body.

Clearly the assumption allowing a release up to two hours bounds the requirement of direct communications be maintained between the main control room and the operators at the refueling station. Therefore, it is concluded that this scenario would not have resulted in an unanalyzed conditions in FSAR 15.5.6.

CONCLUSION

Given the existing hardware and administrative controls that are in place the 10CFR100 exposure limits would not have been exceeded in the event of a Large Break LOCA, Small Break LOCA [illegible] leakage, or Fuel Handling Accident inside containment during containment purging activities with the subject radiation monitor's setpoint out of calibration. These conditions constitute the most limiting events for the subject radiation monitor's setpoint being out of calibration.

VI. EXTENT OF CONDITION

The conditions of old non-conservative gas detector sensitivities and the absences of a gas detector pressure correction is applicable to all [illegible] model RD-32 gas detectors. The Eberline condenser vacuum pump exhaust gas detectors do not compensate for gas chamber pressure. However, they operate at a positive pressure which is conservative. The Sorrento model RD-52 gas detectors are digital and internally compensate for detector chamber pressure. The internal compensation for gas chamber pressure in the model RD-52 is a constant based on a value derived from a test.

PREVIOUS SIMILAR EVENTS

A review of the Licensee Event Report (LER), Nuclear Experience Review (NER), and the Tracking and Reporting of Open Items (TROI) data bases were conducted to identify any previous similar events.

F1000128

The key words used for the NER search were **RADIATION MONITOR** and **SETPOINT**. 132 NER events were identified and none of these events were similar to this problem.

The same keywords were used in the LER data base search. 159 LER events were identified. These events were reviewed and determined not to be applicable to this subject.

The keywords used for the TROI search were all **SYSTEM 90** documents. 422 TROI documents were identified. One document was found to be applicable. SQP900281PER was written to document the wrong sensitivities were being used to calculate RM setpoints. The corrective action associated with this PER could not have prevented this event from occurring.

NRC IE Notice 82-49, *Correction For Sample Conditions for* Air and Gas Monitoring, was identified by personnel involved in the investigation. The Sequoyah response to this notice was inadequate. No corrective action was identified. Had this notice been properly evaluated, this event could have been prevented.

VI. ROOT CAUSE

A. In 1979 a revision to the GA Calibration Report was issued. A trace of the paper shows that this report was transmitted to the TVA Office of Engineering Design in Knoxville, Tennessee. Though it can not be established how, the Sequoyah Instrument RM engineer received a copy of this revision. The Chemistry Section never received a copy of the revised report. There did not exist a programmatic barrier to ensure that changes were reviewed by all appropriate organizations. The root cause of was changes were not adequately communicated.

B. NRC IE Notice 82-49 was issued in 1982 that specifically deals with the effects of pressure on the response of gas detectors and the effects of pressure on the indication of rotometers. The Sequoyah response was inadequate. This is deemed an inappropriate action, because an adequate evaluation of this notice would have prevented this event. The notice was evaluated in part by various plant organizations. The Instrument Maintenance Group evaluated the effects of pressure on rotometers measurements, and determined plant procedures adequate. The Chemistry Section evaluated the effects of pressure on the iodine, particulate, and gas samples and determined the plant procedures to be adequate. The effects of vacuum on the RM gas detector was omitted from

FI000127

the evaluation. No one address the notice from the big picture, only in part. The root cause was there was no methods in place to ensure interdepartmental communications.

C. The SI validation and verification program failed to identified the need to correct the RM gas detectors for chamber pressure. The review identified the revised GA Calibration Report issued in 1979, but did not include the revised values in TI-18. The cause of this omission could not be determined. The personnel from Watts Bar who performed this review are no longer available to interview. However, it is believed that their mindset would be the same as the mindset in Sequoyah Chemistry Department. This barrier failed because management method did not ensure ownership of all aspects of the RMs. The Chemistry personnel focus on effluent quantification and ODCM methodology. The RM setpoints and setpoint methodology were controlled by plant procedures and did not adequately address all necessary aspects. The root cause is lack of engineering control of RM setpoints and setpoint methodology.

D. In April of 19[illegible] an inadequate review was performed on revisions to the plant procedures which controlled the CRI setpoints for RMs. This action is determined inappropriate because the consequences allow the plant to violate the TS limits of TS 3.3.3.1. The reasons and causes are the same as those for the inadequate SI verification and validation actions.

I. CORRECTIVE ACTIONS

A. There exist today an NER program that will ensure all revised vendor information is reviewed for applicability by all appropriate organizations. Therefore, There is no action needed to correct root cause A.

B. The action for root causes B, C, and D are as follows:

1. Define responsibilities for all aspects of RMs. This action is complete. An agreement on responsibilities is attached

2. Document responsibilities determined in action B.1 in appropriate plant documents.
SQO/CEM/WFJ; SQO/RAD/CEK; SQO/MIG/RDP;SQO/ICE/RKG; SQP/LMN/VAB
Due 1/15/93

3. Revise TI-[illegible] to address methods of accounting for gas

detector chamber vacuum.
SQO/CEM/WFJ
Due 12/11/92

4. Determine the bases for values of TS 3.3.3.1 and Table 3.3-6. Determine if TS changes are necessary.
SQP/LMN/VAB
Due 1/29/93

5. Provide SSDs for RM with TS setpoints
SQP/LEE/CRB
Due 2/26/93

6. Revise the SSD for the RM high vacuum malfunction alarm from a setpoint value of 12 ± 1 IN Hg to 9 ± 1 IN Hg.
Resp: SQP/LEE/CRB
Due 2/19/92

l actions have been coordinated withthe responsible parties.

II. OTHER OBSERVATIONS AND ACTIONS

A. The NER database search did not reveal the NRC IE Notice 82-49. The NER keyword indexes should be revised to ensure this notice will be picked up by searches for Radiation Monitors.
Resp: Licensing/Jim Smith
Complete

FI000129

RESPONSIBILITIES FOR RADIATION MONITORS

Maint - Responsible for corrective and preventative maintenance, calibration of RMs

Chem - Responsible for setpoints on effluent and process RMs (anything that readout in cpm or μCi/cc) and ODCM methodology including inaccuracies. They are considered the end user of the equipment and should oversee the daily performance including trending and results of RMs.

Rad Con- Responsible for RMs that read out in dose rate units. They are considered the end user of these RMs and should include the oversight of RM performance, trending and results.

T/S - Provide oversight for the RM system. This includes maintenance and calibration procedures as well as system health and upgrade.

NE - Provide the design basis of the RM system. The are the owner of TS setpoints.

J. H. Holland, OPS 4D-SQN

SEQUOYAH NUCLEAR PLANT - INCIDENT INVESTIGATION (II) ACTION ITEM EXTENSION/CLOSURE

Reference: II Item No. S92080
II Action Item Sequence No. 02

I request that the referenced TROI action be [X] closed as complete.

[ ] extended to _____.

Basis for extension/closure:

Site Standard Practice, SSP-13.1, Conduct of Chemistry was revised on 12/9/92 and contains the responsibilities in the Chemistry Section on effluent radiation monitors. (See Attached)

For closure list supporting closure documentation as required per SSP.12.9 (Attach Copy).
SSP-13.1; REV 3 Dated 12/9/92

[signature] 1/14/92
SIGNATURE (II/ACTION SUPERVISOR) / DATE

TROI updated 1-14-93 PJS

[ ] This extension does not impact nulcear safety or plant operability.

[ ] Alternate Corrective Action.

EVENT MANAGER / DATE

PLANT MANAGER OR DEPT MGR FOR CATEGORY 3 / DATE

The responsible organization's and Plant Manager's approval (or Dept. Mgr's for Category 3) is required for all action data extensions and for closure when action taken is [illegible]erence from the approved corrective action in the Final Event Report.

JHH:PMB

FI000131

PL090205/1317

TENNESSEE VALLEY AUTHORITY

SEQUOYAH NUCLEAR PLANT

SITE STANDARD PRACTICE

SSP-13.1

CONDUCT OF CHEMISTRY

Revision 3

PREPARED/PROOFREAD BY: Mike Goodson DATE: 12/2/92

SIGNATURE Mike Goodson per Telecon RE Richie

RESPONSIBLE ORGANIZATION: Chemistry

APPROVED BY: [signature] DATE: 12/2/92

EFFECTIVE DATE: 12/9/92

VERIFICATION DATE: N/A

REVISION DESCRIPTION: This revision modifies chemistry limits and sampling frequencies for various plant systems. Additional guidance for implementing and maintaining a data assessment program and recommendations for implementing and monitoring overall program responsibilities are provided in this revision. This revision will control systems 14 and 43 Chemistry annunciator/alarm setpoints to ensure compliance to current Chemistry standards. DCNs M08902A and M08903A on Unit 1 and Unit 2 respectively removed annunciator/alarm control from plant Instrument Tabulation drawings.

3.7 Bulk Chemical Specifications

Strict criteria for system chemistry control at SQN requires that bulk chemicals and materials used in systems be controlled to prevent contaminant introduction and ensure system operability. Guidelines and requirements for bulk chemicals are delinerated in Chapter 10 of the Nuclear Power Chemistry Manual. These requirements are based on regulatory criteria, plant system vendor specifications and industry best practices. The guidelines will be strictly adhered to for chemicals coming in contact with CSSC equipment.

The Chemistry Department shall verify the proper location for all site chemical and fuel oil deliveries and discharges. Control will be maintained by locking all unloading and transfer valves. Control of chemicals at SQN is further delinerated in SSP-13.2 "Chemical Traffic Control (CTC) Program".

3.8 Radioactive Effluents

The Chemistry organization shall have a radioactive effluents monitoring program, as required by the site administrative Technical Specifications, established in the Offsite Dose Calculation Manual (ODCM).

Corporate Chemistry is responsible for establishment and maintenance of a meteorology program which complies with the requirements given in 10 CFR 50.

In accordance with Sequoyah Technical Specification Administrative Section, the radioactive liquid effluent monitoring instrumentation channels shall be operable with their alarm/trip setpoints set to ensure that the limits of the ODCM are not exceeded.

Effluent radiation monitor backgrounds should be monitored and maintained as low as possible to ensure accurate effluent monitoring. The setpoint for the effluent radiation monitor will routinely be set at a small fraction above the expected response and will alarm or automatically terminate the release. The termination of the release will initiate an evaluation into changes in the release pathway, radioactivity levels, monitor backgrounds, changes, etc.

Effluent release monitoring will also be evaluated for Regulatory Guide 1.21 compliance. Representative sampling verification, effluent radiation monitor response versus expected response, etc., any anomalies will be evaluated and corrective action taken.

3.9 Instructions

J. H. Holland, OPS 4D-SQN

SEQUOYAH NUCLEAR PLANT - INCIDENT INVESTIGATION (II) ACTION ITEM EXTENSION/CLOSURE

Reference: II Item # II592080
II Action Sequence No. 03

I request that the referenced TROI action be /✓/ closed as complete.

/ / extended to _____.

Basis for extension/closure:

Rad. Monitor responsibilities in CAM's and ARM's documented in RCI-5, Radiological Control Implementation Program, page 5, Section 5.6.5.

For closure list supporting closure documentation as required per SSP.12.9 (Attach Copy

Michael Yates for Charles Kent 1-14-93
SIGNATURE (II/ACTION SUPERVISOR) / DATE

TROI updated 1-14-93 PMB

/ / This extension does not impact nuclear safety or plant operability.

/ / Alternate Corrective Action.

_____ / _____
PLANT MANAGER / DATE

The plant managers approval is required for all action date extensions and for closure when action taken is different from the approved corrective action in the Final Event Report.

FI000136

JHH:PMB

1159y

TENNESSEE VALLEY AUTHORITY

SEQUOYAH NUCLEAR PLANT

RADIOLOGICAL CONTROL INSTRUCTION

RCI-5

RADIOLOGICAL CONTROL INSTRUMENTATION PROGRAM

Revision 16

PREPARED/PROC[illegible]EAD BY: Steven R. Bradley DATE: 1-13-93

SIGNATURE: [illegible]

RESPONSIBLE ORGANIZ[illegible]: [illegible]ological Control

APPROVED BY: [illegible] DATE: 1-14-93

EFFECTIVE DATE: 1-15-93

REVISION
DESCRIPTION: Revised to incorpora[illegible] mont[illegible] [illegible]esponse checks for electronic dosimeter [illegible] and m[illegible] [illegible]nor editing changes.

FI000135

5.6 Instrument Control (Continued)

5.6.3 RADCON portable instrumentation available for use shall be in a well defined area separate from other instruments.

5.6.4 Individuals that use radiation protection equipment are required to adhere to the RADCON instructions that dictate the use and handling of the equipment.

5.6.5 RADCON will monitor the availability of the plant general area continuous air monitors (CAM) and area radiation monitors (ARM) and will provide management oversight for these instruments.

QUALITY ASSURANCE PROVISIONS

None.

h/dar

J. H. Holland, OPS 4D-SQN

SEQUOYAH NUCLEAR PLANT - INCIDENT INVESTIGATION (II) ACTION ITEM EXTENSION/CLOSURE

Reference: II Item No. 592080
II Action Item Sequence No. 04

I request that the referenced TROI action be [X] closed as complete.

[ ] extended to _____.

Basis for extension/closure:

The maintenance Responsibilities for all instrumentation is stated in SSP 6.1, "Conduct of Maintenance." There are no separate responsibilities for RAD Monitoring Instrumentation.

For closure list supporting closure documentation as required per SSP 12.9 (Attach Copy)

1/11/93
SIGNATURE (II/ACTION SUPERVISOR) / DATE

TROI updated 1-12-93 PLS

[ ] This extension does not impact nulcear safety or plant operability.

[ ] Alternate Corrective Action.

EVENT MANAGER / DATE

PLANT MANAGER / DATE
OR DEPT MGR FOR CATEGORY 3

The responsible organization's and Plant Manager's approval (or Dept. Mgr's for Category 3) is required for all action data extensions and for closure when action taken is difference from the approved corrective action in the Final Event Report.

FI000135

JHH:PMB

PL090205/1317

1.0 INTRODUCTION

Maintenance has a primary role in ensuring safe and reliable nuclear power facility electrical generation. To carry out this role, management endorses a strong maintenance philosophy based on a sound set of standards, values, convictions, and principles. That philosophy is established and implemented by this Site Standard Practice.

The guidelines of this Site Standard Practice conform to INPO 85-038 *Guidelines for the Conduct of Maintenance at Nuclear Power Stations*.

1.1 Purpose

This Site Standard Practice provides requirements, guidelines, and instructions for the conduct of maintenance to ensure maintenance activities are conducted in an effective, consistent manner in accordance with the operating license, plant procedures, and applicable regulatory requirements. Additionally, this Site Standard Practice presents and endorses a professional code provided on Appendix A *Maintenance Professional Code*.

1.2 Applicability

This Site Standard Practice applies to all personnel (TVA and contractor) involved in the administration, planning, scheduling, supervision, and performance of maintenance activities or functions at TVA's nuclear facilities. The requirements of this Site Standard Practice also apply to maintenance activities performed by nonnuclear Power organizations on plant equipment.

2.0 REQUIREMENTS

2.1 Maintenance Organization and Administration

2.1.1 Management Standards and Expectations

In order for the Maintenance Organization to function effectively, the following management standards and expectations are established for all Maintenance employees.

.1 Management Standards and Expectations (Continued)

All Maintenance Employees

A. STRIVE to achieve the highest level of technical competence in his or her discipline--become the expert in their skill.

B. CONSIDER personal safety and the safety of others as being the utmost in the performance of any activity, AND

COMPLY with site safety rules and the use of safety equipment at all times.

C. PAY attention to the minute details of each task performed, AND

VERIFY each detail is correct, AND

ENSURE every activity is done right the first time.

D. COMMUNICATE effectively:

1. ESCALATE problems.

2. REPORT deficiencies quickly.

3. PROVIDE input to problem resolution.

4. ASK questions.

5. LEARN and USE the communication systems such as conditions adverse to quality reports, work requests, and suggestion programs.

6. TALK to their supervisor.

It takes each employee's contribution to ensure success.

E. SUPPORT a team approach to activities and the conduct of daily routines.

It is never their problem--it is always ours.

F1000139

.1 Management Standards and Expectations (Continued)

All Maintenance Employees (Continued)

F. THINK problems and tasks through--be creative when deriving resolutions.

Application of new technologies and approaches is promoted.

G. BE accountable for the quality and efficiency of his or her work, including technical correctness of the work, housekeeping, safety, and so forth.

H. CONSIDER dose reduction in every task as low as reasonably achievable (ALARA).

Is there a better way to do the task at hand to minimize dose?

I. CONSIDER shielding, flushing the system, use of glove bags, and so forth.

J. RESPONSIBLE [illegible] to work both mentally and physically fit to perform their duties.

The requirements of the Fitness for Duty Program are delineated in SQA80.3.13 *Fitness for Duty Program.*

K. MAINTAIN the plant to design conditions, AND

OBTAIN approval for any deviation from design configuration by the appropriate design control process such as a design change request and so forth in accordance with the following implementing documents:

1. AI-19 (Part VI) *Modifications: Permanent Design Change Control Program*

2. AI-9 *Control of Temporary Alterations and Use of Temporary Alterations Order.*

L. PROTECT plant equipment, AND

DO NOT LEAVE equipment open and unattended.

M. USE the correct tool properly, AND

RETURN the tool to the correct location when a task is complete, AND

F1000140

DO NOT ABUSE tools.

2.1.7 Specific Group Manager Duties and Responsibilities (Continued)

Instrument Maintenance Group Manager

C. RESPONSIBLE to the Maintenance Manager for the management of the following areas:

1. Maintenance of plant process instrumentation.

2. Maintenance of plant security equipment.

3. Maintenance of plant installed radiation/contamination monitor.

4. Instrument Calibration Program (SQE8 *Control of Installed Permanent Process Instrumentation*).

5. Housekeeping for instrumentation shops and offices.

6. Instrumentation repair and test capabilities.

Maintenance Support Group Manager

D. RESPONSIBLE to the Maintenance Manager for the management of the following areas:

1. Management of support craft activities (laborers, carpenters, sheet metal workers, painters, asbestos, and composite crew).

2. Plant protective coating and preservation efforts.

3. Thermal insulation and fire barrier integrity.

4. Scaffold Program.

5. Plant Housekeeping and Foreign Material Exclusion Program.

6. Tool Room operations, Tool Control Program, and tool maintenance.

7. Measuring and Test Equipment (M&TE) Program.

8. Asbestos removal and control.

9. Executing warehouse preventive maintenance.

FI000142

J. H. Holland, OPS 4D-SQN

SEQUOYAH NUCLEAR PLANT - INCIDENT INVESTIGATION (II) ACTION ITEM EXTENSION/CLOSURE

Reference: II Item No. IIS 92080 VII-B 2
II Action Item Sequence No. 05

I request that the referenced TROI action be [X] closed as complete.

[ ] extended to _____.

Basis for extension/closure:

Per the System engineers responsibilites as defined in SSP 8.50 Rev 2 "Conduct of Technical Support", T/S responsibilites as defined by this II are documented

For closure list supporting closure documentation as required per SSP.12.9 (Attach Copy).

JKN RK Hedney 11/15/93
SIGNATURE (II/ACTION SUPERVISOR) / DATE
PLS

[ ] This extension does not impact nuclear safety or plant operability.

TROI update 1-6-93 PLS

[ ] Alternate Corrective Action.

EVENT MANAGER / DATE

PLANT MANAGER OR DEPT MGR FOR CATEGORY 3 / DATE

The responsible organization's and Plant Manager's approval (or Dept. Mgr's for Category 3) is required for all action date extensions and for closure when action taken is different from the approved corrective action in the Final Event Report.

F1000142

JH:PMB

PL090205/1317

.3 Technical Support System Engineers Responsibilities

OTE 1 Qualifications, training requirements, and experience necessary to perform engineering functions shall be of primary concern when assigning system engineering responsibilities to an individual.

OTE 2 In general, an individual assigned to perform as a system engineer will normally be assigned direct responsibility for one to four systems. However, this will be determined by a Technical Support Section Supervisor based on the knowledge, training and experience of the individual and the complexity of the system to which the individual is assigned.

A. Improve the reliability and performance of assigned system(s).

B. Perform walkdowns in accordance with memorandum, "SQN-Walkdown Program - Technical Support", (S57 900117 800). This includes, but is not limited to:

1. Maintaining a regular presence in the field.

2. Initiating corrective action, if necessary.

3. Monitoring performance indicators to ensure reliable system operation.

C. Discuss the operation and maintenance of assigned system(s) with Operations personnel and maintenance planners, to help identify any recurring abnormal operational or maintenance conditions. This includes review of appropriate logs and instrumentation data.

D. Trend important system parameters such as flow rates, pressure, electrical voltages, etc., to identify deteriorating system performance. [C.2]

E. Initiate corrective actions prior to a failure or forced outage; such as, providing input to the PM program for new or revised requirements.

F. Evaluate significant changes or developing trends and recommend appropriate corrective actions to the immediate Technical Support Section Supervisor. [C.2]

Provide technical assistance to other sections in writing/revising instructions, proposed Technical Specifications changes, and FSAR revisions.

FI000345

2.3 Technical Support System Engineers Responsibilities (Continued)

H. Determine potential problem equipment to be trended in the assigned system(s) and provide documented rationale for the determination of the equipment and applicable performance indicators to be trended. Trending of selected equipment may include device drift found at calibration intervals, conditions found during SI, WO, and/or PM performance, status/condition of equipment during system walkdowns, Nuclear Plant Reliability System (NPRDS) and Equipment Management System (EMS) failure reports, etc. Methods available to the SE for use in determining the equipment to be trended includes engineering judgement, based equipment history, and Reliability Centered Maintenance (RCM) methodology contained in SSP-6.51. The information trended should be used to predict failures resulting in increased unit availability, reliability, and performance. Special trending requirements are outlined in Appendix C. [C.2 and C.3]

NOTE Component Failure Analysis Reports (CFARs) will be analyzed by a representative from Systems Engineering to deal with component failures across system boundaries. [C.2 and C.3]

I. Evaluate NPRDS and EMS failure reports (SSP-6.4) for the SE assigned system(s) to determine if (1) a failure of the device actually occurred or if something else resulted in the condition of the device, and (2) an undesirable trend has developed with the component. The SE review and response to the NPRDS and EMS failure reports shall be completed and documented within 30 days of receipt from the Special Projects/Trends Supervisor. Undesirable trends will be reported to the immediate Technical Support Supervisor. [C.2 and C.3]

J. Maintain System Notebooks in accordance with Appendix E.

K. Perform a technical review of new or revised instructions, as assigned, prior to implementation.

L. Revise as necessary, any instructions that Technical Support is responsible for and is applicable to their assigned system(s).

M. Review workplans for impact on system interactions, maintainability, system configuration changes, and adequacy of testing performed to validate the system performance after modification.

N. Review (periodically) work requests (WRs) to maintain a familiarity of maintenance activities and help identify and evaluate repetitive failures of equipment.

F1000144

2.3 Technical Support System Engineers Responsibilities (Continued)

O. Assist in the specification of post maintenance testing as requested by other site sections.

P. Review (periodically) the performance of post maintenance testing activities to ensure the adequacy of testing.

Q. Review Design Change Requests (DCRs) applicable to assigned system(s) for need and priority prior to management's approval.

R. Recommend changes in system design as a result of items identified through the Nuclear Experience Review (NER) process. This may include contacting other sites or utilities to evaluate items potentially applicable to Sequoyah. Maintain a copy of appropriate NER correspondence in the system notebook. (Reference SSP-4.4)

S. Perform investigations on items which are not resolved by routine maintenance activities. This may include developing root cause analyses or writing and performing special tests to obtain adequate information to evaluate system performance and/or resolve the root cause of a system malfunction.

T. Assist and/or perform the investigation of reportable occurrences or significant operating events.

U. Develop programs, analyses, and reports to respond to new or revised regulatory requirements and requests. (Includes NRC bulletins, Generic Letters, and notices that require technical responses to meet regulatory deadlines.)

V. Provide input to annual SAR updates.

W. Provide input to plant schedules for system outages, testing and investigations.

X. Perform project management functions for outage related activities as assigned.

1. For major maintenance activities as assigned.
2. For section equipment as assigned.

Y. Evaluate adequacy of system technical information.

1. Technical manuals.
2. Drawings.
3. Site procedures as assigned.

Z. Support/assist administratively.

1. INPO/NUREG/Generic Letter review, NER program, etc.
2. Licensee Event Report preparation.
3. Follow up on plant safety committee requests/commitments.

2.3 Technical Support System Engineers Responsibilities (Continued)

AA. Investigate drawing deviations between design and as-built configuration. (Reference SSP-2.11)

BB. Establish system/component service/life limitations.

1. Review operational requirements to identify most limiting components (i.e., elastomers, solenoids, motors, etc.)
2. Maintain knowledge of system/component life status.

CC. Perform periodic evaluations of:

1. Products of the Corrective Action Program
2. Safety evaluations
3. Test deficiencies
4. Drawing deficiencies
5. M&T out of calibration
6. TACs

DD. Coordinate/obtain vendor support as required.

EE. Assist maintenance crews with equipment testing and craft support as assigned.

FF. Submit a monthly letter to their assigned supervisor in accordance with the format of Appendix B.

GG. Ensure all activities which directly/indirectly affect reactivity management are reviewed by Reactor Engineering (Reference SSP-12.17).

2.4 System Engineer Certification

2.4.1 Certification Record

The Certification Record (Appendix A) is to document completion of training that demonstrates attainment of the System Engineer Certification. Completion of this certification is not required for performance of the duties and responsibilities outlined in Section 2.3. These duties will be assigned to individuals based on the judgement of the Technical Support Supervisors.

F1000148

TECHNICAL SUPPORT MISSION STATEMENT

The mission of Technical Support is to provide technical leadership for Sequoyah Nuclear Plant through optimization of system performance and reliability, quality management of reactivity and assigned engineering programs, proactive identification and resolution of plant issues, initiation of design modifications and technical assistance to the Operations and Maintenance departments. With regard to these areas, the following functions are performed. This Attachment may be updated at any time with the approval of only the Technical Support Manager.

_____ / _____
Technical Support Manager Date

1. **Plant Performance**

Establish plant performance monitoring activities to optimize plant reliability and efficiency by routinely collecting, trending and analyzing performance data such as thermal, hydraulic, electrical, acoustical, and mechcanical data for equipment, systems, and components important to plant reliability and efficiency. Performance data is analyzed, and the results are used to proactively predict and correct degrading performance. Serve as the technical lead in resolving identified problems.

. **Reactivity Management**

Technical Support, and in particular the Station Reactor Engineer, has the overall responsibility for ensuring that the operation of the reactor core is compatible with the cycle goals, and that the fuel remains within its design basis. Reactivity management comprises all aspects of how Sequoyah is operated, and our philosophy of reactivity management demands that (Reference SSP-12.17).

A. All planned reactivity changes are conducted in a controlled manner.

B. The effects of reactivity changes are known and monitored.

C. Any anomalous indication is met with conservative action.

. **Program Management**

Directs the development of assigned programs and provides technical direction for ongoing implementation of these programs.

- Section XI Repair and Replacement
- Section XI System Test (Hydro's)
- Section XI Pumps and Valves
- Appendix J (LLRT AND CILRT)
- Heat Exchangers
- Fire Protection
- Response Time Test
- Surveillance Instrument (TI-54)
- Software Change Control
- Unit Performance
- TACF's
- Valves (SOER 86-003)
- [illegible]

FI000147

J. H. Holland, OPS 4D-SQN

SEQUOYAH NUCLEAR PLANT - INCIDENT INVESTIGATION (II) ACTION ITEM EXTENSION/CLOSURE

Reference: II Item No. 592080

II Action Item Sequence No. 6

I request that the referenced TROI action be /X/ closed as complete.

/___/ extended to _____.

Basis for extension/closure.

See the attached.

For closure list supporting closure documentation as required per SSP.12.9 (Attach Copy).

VA Bland / 1/13/93

SIGNATURE (II/ACTION SUPERVISOR) / DATE

TROI updated 1-14-93 PLS

/___/ This extension does not impact nuclear safety or plant operability.

/___/ Alternate Corrective Action.

_____ / _____

PLANT MANAGER / DATE

The plant managers approval is required for all action date extensions and for closure when action is different from the approved corrective action in the Final Event Report.

:VGT

PL025N08--ID 51

FI000148

2080 TROI SEQUENCE 6:

IIS92080 TROI Sequence # 6 may be closed due to the existing administrative controls. STD-9.4 Configuration Management Control indicates "site Engineering Managers have management responsibility for establishing and maintaining design basis documents for their sites (except for nuclear fuel components; see Nuclear Power Standard 9.1) and are accountable for the quality and completeness of the design basis within their scope." This requirement has been satisfied with the Radiation Monitoring System Design Criteria (SQN-DC-V-9.0) and its references. The attached sheets from the said documents support this position.

Calvin W. Burrell Jr. 1/13/93
Calvin W. Burrell Jr./Date
Paperer

VA Bianco 1/13/93
Vince A. Bianco/Date
Reviewer

PURPOSE

This standard establishes the requirements and responsibilities for the documentation of plant design basis and configuration, and for configuration control.

2.0 SCOPE

The configuration management program defined in this standard identifies documented design requirements, ensures the design is properly implemented, documents the actual plant configuration, and controls configuration throughout the life of the plant. Changes to plant configuration and the updating of configuration documents to incorporate those changes are covered in Nuclear Power Standards 9.2, 9.3, and 12.4.

This standard applies to TVA employees and contractors involved in activities that affect nuclear plant configuration.

3.0 INSTRUCTIONS

Configuration management is an integrated process that ensures (a) that plant structures, systems, components, and computer software conform to approved design requirements, and (b) that a plant's physical and functional characteristics are accurately reflected in plant documents and data systems.

3.1 Design Basis Documentation

The design basis for each nuclear plant shall be established and documented.

3.1.1 The Chief Engineer, Corporate Engineering, provides (a) requirements or criteria for identifying and scoping design basis documents, and (b) defines the engineering processes followed in producing design basis documents. These requirements, criteria, and processes shall:

A. Ensure that environmental qualification of safety-related equipment is included, as appropriate, in the design basis.

B. Establish and define design responsibilities and interface controls to facilitate preparation, review, approval, release, distribution, and revision of documents involving design interfaces.

C. Implement the applicable requirements of ANSI N45.2.11-1974 and Regulatory Guide 1.64, Rev 2, 1976.

3.1.2 Site Engineering Managers have management responsibility for establishing and maintaining design basis documents for their sites (except for nuclear fuel components; see Nuclear Power Standard 9.1) and are accountable for the quality and completeness of the design basis within their scope. Site engineering managers ensure that (a) personnel who prepare, review, approve, issue, and revise those design basis documents are trained in the applicable established engineering processes, and (b) requirements, criteria, and engineering processes for documenting design basis are implemented.

3.1.3 The Nuclear Fuel Manager manages establishment of fuel component-related design basis documents for each site, and is accountable for the quality and completeness of the design basis for nuclear fuel components. The Nuclear Fuel Manager ensures that (a) personnel who prepare, review, approve, issue, and revise those design basis documents are trained in the applicable established engineering processes, and (b) requirements, criteria, and engineering processes for documenting design basis are implemented.

3.2 <u>Plant Configuration Documentation</u>

The plant configuration shall be established and documented for each nuclear site. Plant configuration includes the physical arrangements and functional attributes of structures, systems, and components, and the computer software, procedures, and other documents that effect functional control of those structures, systems, and components.

Each Site Vice President may, with the Chief Engineer's concurrence, establish an Exclusion List that identifies site items not subject to configuration management. The Exclusion List may include only structures, systems, or components that are not quality-related and are not described in the plant Safety Analysis Report. When an Exclusion List is established, the Site Vice President must implement controls to ensure that the list is maintained current.

3.2.1 The Site Vice President shall establish and ensure implementation of the processes and controls required to accomplish documentation of plant configuration. These processes and controls shall detail responsibilities of and interfaces between involved organizations, and shall provide controls for transmittal of configuration information between organizations. The interface controls shall provide for verifying the quality of information transmitted between site organizations.

F1000151

1.0 SCOPE

Scope

This document will ultimately include the design criteria for all monitor channels of the plant radiation monitoring system (System 90).

The second revision of Design Criteria SQN-DC-V-9.0 was written specifically to satisfy one of the system inputs to the Restart Design Basis Document (RDBD), revision 1. Therefore, it addressed the design basis of those monitors of the radiation monitoring system that are within the restart system boundaries defined in the SQN-OSG7-048, revision 5, calculation (reference 6.1.1). The second revision also included the design criteria of other monitors that were included in an earlier revision of SQN-OSG7-048.

The third revision of Design Criteria SQN-DC-V-9.0 includes all criteria of the second revision and incorporates DIM-SQN-DC-V-9.0-3. The third revision expands those criteria to include the design requirements for all monitor criteria needed to satisfy commitments made to the NRC in CCTS No. NC086-0[illegible]-00[illegible] The criteria for several additional monitors were available and [illegible] also added in the third revision.

A future revision of the design criteria will add the design requirements for all other monitors of the radiation monitoring system. Design requirements for some of the [illegible] monitors are provided in the first revision of this design criteria. To preserve the documentation of these requirements until they are incorporated in the future revision, the first revision is enclosed as Attachment A.

All regulatory requirements and TVA commitments for implementing Regulatory Guide 1.97 Revision 2 have been incorporated by Revision 4. If a discrepancy is found to exist between this design criteria and another Sequoyah Nuclear Plant (SQN) design criteria, the appropriate Nuclear Engineering (NE) department manager(s) shall be notified by memorandum. If a discrepancy is found to exist between this design criteria and any other document where the other document is not a SQN design criteria, then this design criteria shall govern.

.2 System and Component Identification

The overall radiation monitoring system is shown in TVA control diagrams 47W610-90-1 through -6, reference 6.1.12.

FI000152

PL025N04--1932

II-5-92-080 SEQ # 07

COMMITMENT COMPLETION FORM

Part I. CONTROL NUMBER NC0920161001

Originating Document LER 327/92019

Commitment Due Date 12/31/92 (C) Reference S10921207800 RAF to NRC

Commitment Statement: TI-18 and O-SI-CEM-030-410.2 will be revised to address the method of accounting for gas detector chamber vacuum by December 31, 1992.

********** **********

Part II. Commitment Completion Information (Use a separate sheet if additional space is needed).

A. Action Taken to Complete Commitment: _____

B. Reference Documentation: _____

C. Commitment Completion Date: _____

D. Commitment and Documentation Completed and Approved. Completion of all actions as noted in documentation are sufficient to fully implement the commitment.

Signature Implementing Organization: _____ Date _____
In-line Independent Verification: _____ Date _____
Signature Lead Coordinator: _____ Date _____

Forward to Site Licensing upon completion.

********** **********

Part III. Site Licensing:

CCTS Updated to show receipt: _____ _____
Signature

F1000153

. H. Holland, OPS 4D-SQN

EQUOYAH NUCLEAR PLANT - INCIDENT INVESTIGATION (II) ACTION ITEM EXTENSION/CLOSURE

eference: II Item No. II-S-92-080
II Action Item Sequence No. 8

request that the referenced TROI action be /N/ closed as complete.

/ / extended to _____.

asis for extension/closure:
Calculation coversheets are attached.
SQNAPS3-116 Rev 0.
TJ-RPS-181-1 v.1
-APS3-53 Rev 0.

r closure list supporting closure documentation as required per SSP.12.9 (Attach Copy).

Mike Dunst / 16 April 1993
GNATURE (II/ACTION SUPERVISOR) / DATE

TROI updated 4-16-93 PLS

/ / This extension does not impact nulcear safety or plant operability.

/ / Alternate Corrective Action.

for RWF / 4/16/93
T MANAGER / DATE

PLANT MANAGER / DATE
OR DEPT MGR FOR CATEGORY 3

responsible organization's and Plant Manager's approval (or Dept. Mgr's for gory 3) is required for all action data extensions and for closure when action taken if nce from the approved corrective action in the Final Event Report.

F100015

MB

0205/1317

TITLE	PLANT/UNIT
Technical Specification Setpoints for Containment Monitors RM-90-106/112 and RM-90-130/131	SQN 1&2

PREPARING ORGANIZATION	KEY NOUNS (Consult RIMS DESCRIPTORS LIST)
M/NE Dept.	Rad Monitor, STP, FENCDOSE, COROD, Setpoint

BRANCH/PROJECT IDENTIFIERS	Each time these calculations are issued, preparers must ensure that the original (R0) RIMS accession number is filled in.		
	Rev	(for RIMS' use)	RIMS accession number
SQNAPS3-116	R0		
APPLICABLE DESIGN DOCUMENT(S)	R _		
N/A	R _		
SAR SECTION(S) 11.4 / UNID SYSTEM(S) N/A	R _		

Revision 0	R1	R2	R3
ECN No. (or indicate Not Applicable) N/A	N/A		
Prepared 4/8/93			
Checked 4-15-93			
Reviewed 4-15-93			
Approved			
Date 4/1.'93			
List all pages added by this revision.			
List all pages deleted by this revision.			
List all pages changed by this revision.			

Use for 10534 if space rem.

Safety-related? Yes ☑ No ☐

Statement of Problem

Determine the adequacy of existing Tech Spec setpoints for RM-90-106/112 and RM-90-130/131 for limiting doses to 10CFR100 and GDC 19 during a small LOCA with containment purge

Abstract

These calculations contain an unverified assumption(s) that must be verified later. Yes ☐ No ☑

Calculation contains special requirements or limiting conditions. Yes ☐ No ☑

This calculation determines the adequacy of the existing SQN Tech Spec setpoints for containment (CTM) monitors RM-90-106/112 and RM-90-130/131. This was done as part of the corrective action to the radiation monitoring incident investigation reported in II-S-92-80. The subject monitors initiate a CVI upon detection of high radiation in CTM atmosphere and purge exhausts. This safety objective is specifically applicable to a small break LOCA event concurrent with CTM purging.

F1000155

Source terms for the small LOCA consisted of a release of 100% of the RCS activity with a factor of 10 iodine spike. Total release to the environment consisted of CTM leakage (0.25%/day, first 24 hr, 0.125%.day, thereafter) and CTM purge (14000 cfm of lower CTM, case 1 and 14000 cfm of upper CTM, case 2).

P was used to calculate radioactive purge concentrations at various times st-small LOCA. These concentrations were compared with those in Table 3.3.6 of the SQN TSs. FENCDOSE and COROD were used to calculate the control room and offsite doses due to this event to determine compliance with 10 CFR100 and GDC 19.

Results of this calculation are given below.

Total pages R0: 36

☐ Microfilm and store calculations in RIMS Service Center

TITLE	PLANT/UNIT
BASIS FOR DETERMINING AN ACCEPTABLE SET POINT FOR THE SPENT FUEL POOL RADIATION MONITOR SET POINT	Sequoyah 1 & 2

PREPARING ORGANIZATION	KEY NOUNS (Consult RIMS DESCRIPTORS LIST)
NE/M/NE/SQEP	Spent Fuel Pool, Monitor Set Point

BRANCH/PROJECT IDENTIFIERS: TI-RPS-181, RPS-3147

Each time these calculations are issued, preparers must ensure that the original (R0) RIMS accession number is filled in.

Rev	(for RIMS' use)	RIMS accession number
R0	841207T0021	NEB 841206 237
R1	900212E0005 (51)	B87 900116 007
R—		
R—		

APPLICABLE DESIGN DOCUMENT(S): SQN-DC-V-9.0

SAR SECTION(S)	UNID SYSTEM(S)
N/A	90

	Revision 0	R1	R2	R3
ECN No. (or indicate Not Applicable)	N/A	N/A		
Prepared: M. K. Brandon				
Checked: W. M. Bennett		12/6/85		
Reviewed: F. A. Koontz, Jr		12/6/85		
Approved: G. E. German		W L Elliott		
Date: 12/6/84		11/7.		
List all pages added this revision.		10.		
List all pages deleted by this revision.		N/A		
List all pages changed by this revision.		N/A		

Safety-related? Yes ☑ No ☐

Statement of Problem

Determine the relationship between the dose rate seen at the spent fuel pool radiation monitors (RE-90-102 and 103) due to a postulated fuel handling accident and the resulting unfiltered offsite thyroid dose.

Abstract

These calculations contain an unverified assumption(s) that must be verified later. Yes ☐ No ☑

An analysis was performed to determine the re[illegible]nship between the dose rate seen at the spent fuel pool radiation monitors (RE-90-[illegible] and 103) due to a postulated fuel handling accident and the resulting unfilte[illegible]te thyroid dose. The purpose of this analysis is to determine if a higher set po[illegible] the above monitors can be justified.

Occasional isolations of the auxiliary buil[illegible]g ventilation systems have occurred due to "spurious" monitor readings in excess of the current set point, ~~18~~ 10 mR/hr. It may be possible to avoid these "spurious" isolations by increasing the monitors' set point without raising the offsite dose to an unacceptable level from releases which do not trigger isolation. Failure to isolate the auxiliary building will affect only the thyroid dose since the auxiliary building gas treatment system (ABGTS) filters only affect the iodines. From the relationship between the monitor reading and the unfi[illegible]ed offsite thyroid dose, the acceptability of a set point can be assessed on the basis of the offsite radiological conse[illegible]nces of a fuel handling accident. This analysis was requested by NUC PR.

F1000156

ETERMINATION OF MAIN CONTROL ROOM INTAKE MONITOR (0-RM-90-125,126) SETPOINT		Plant/Unit SQN 1 & 2
eparing Organization DNE/NEB/APS3	KEY NOUNS (Consult RIMS Descriptors List) RADIATION MONITOR, MHA LOCA, FHA, CONTROL ROOM	
anch/Project Identifiers PS3-053	Each time these calculations are issued, preparers must ensure that the original (RO) RIMS accession number is filled in. Rev (for RIMS' use) 35	RIMS ACCESSION NUMBE
	RO 870727F0013	B45 '870530 23
pplicable Design Document(s)	R	
	R	
AR Section(s) / UNID System(s)	R	

Revision 0	R1	R2	R3	Safety-related? Yes (x) No ( )
CN No. (or Indicate Not Applicable)				Statement of Problem
epared Marc C. Seay				Determine if the 400 cpm setpoint for the main control room air intake monitor (0-RM-90-125,126) is acceptable.
ecked Will M. L				
eviewed Ernest D. Kirk, Jr.				
pproved Thomas A. Fox, Jr.				
ate 5-30-87				
SE FORM List all pages added by this revision				
List all pages deleted by this revision				
QUIRED List all pages changed by this revision				

STRACT [These calculations contain an unver ied assum on(s) that must be verified later. Yes ( ) No (x)

documentation had been found to support the setpoint va n in the SQN Tech Spec 3.3.3.1 for the main ntrol room air intake radiation monitors (0-RM-90-125,126) tetectors were installed to protect the erators by isolating the control room in the event an accidant significant amounts of radioactivity. is calculation is to determine if the current setpoint of 400 co minute (cpm) is acceptable.

procedure for this calculation consisted of several t . The first part of this calculation determined the nt rate expected at the beginning of a LOCA to see if is value was greater than the setpoint. The radio- ive releases due to a maximum hypothetic loss of coola accident (MHA-LOCA) were taken from the three time ervals from a modification of a STP run found in SQNAPS3 052. These intervals were chosen to be representative he accident spectrum at the beginning of the LOCA.

second part of the calculation determ the count rate for the beginning of the fuel handling accident (FHA). was done in the same manner as the first part. Th activi s were taken from the first three time steps of STP run from GENNAL3-008.

F100015

inu page 2)

ofilm and store calculations in RIMS Service Cent Microfilm and destroy. ( )
rofilm and return calculations to: F. Taylor Address: WID D222 C-K

IS, SL 26 C-K
L. Jones, DNE DSC-MOU 3, SQN

DNEI-5152

RADIATION MONITORING INSTRUMENTATION

INSTRUMENT	MINIMUM CHANNELS OPERABLE	APPLICABLE MODES	ALARM/TRIP SETPOINT	MEASUREMENT RANGE	ACTION
1. AREA MONITOR					
a. Fuel Storage Pool Area	1	*	≤ 100 mR/hr	10^{-1} - 10^{4} mR/hr	26
2. PROCESS MONITORS					
a. Containment Purge Air	1	1, 2, 3, 4 & 6	≤ 8.5×10^{-3} μCi/cc	10 - 10^{7} cpm	28
b. Containment					
i. Gaseous Activity					
a) Ventilation Isolation	1	ALL MODES	≤ 8.5×10^{-3} μCi/cc	10 - 10^{7} cpm	28
b) RCS Leakage Detection	1	1, 2, 3 & 4	N/A	10 - 10^{7} cpm	27
ii. Particulate Activity					
a) Ventilation Isolation	1	ALL MODES	≤ 1.5×10^{-5} μCi/cc	10 - 10^{7} cpm	28
b) RCS Leakage Detection	1	1, 2, 3 & 4	N/A	10 - 10^{7} cpm	27
c. Control Room Isolation	1	ALL MODES	≤ 400 cpm**	10 - 10^{7} cpm	29

* With fuel in the storage pool or building

** Equivalent to 1.0×10^{-5} μCi/cc.

FI00356

RADIATION MONITORING INSTRUMENTATION

INSTRUMENT	MINIMUM CHANNELS OPERABLE	APPLICABLE MODES	ALARM/TRIP SETPOINT	MEASUREMENT RANGE	ACTI
1. AREA MONITOR					
a. Fuel Storage Pool Area	1	*	$\leq$ 200 mR/hr	10^{-1} - 10^{4} mR/hr	26
2. PROCESS MONITORS					
a. Containment Purge Air	1	1, 2, 3, 4 & 6	$\leq 8.5 \times 10^{-3}$ µCi/cc	10 - 10^{7} cpm	28
b. Containment					
i. Gaseous Activity					
a) Ventilation Isolation	1	ALL MODES	$\leq 8.5 \times 10^{-3}$ µCi/cc	10 - 10^{7} cpm	28
b) RCS Leakage Detection	1	1, 2, 3 & 4	N/A	10 - 10^{7} cpm	27
ii. Particulate Activity					
a) Ventilation Isolation	1	ALL MODES	$\leq 1.5 \times 10^{-5}$ µCi/cc	10 - 10^{7} cpm	28
b) RCS Leakage Detection	1	1, 2, 3 & 4	N/A	10 - 10^{7} cpm	27
c. Control Room Isolation	1	ALL MODES	$\leq$ 400 cpm**	10 - 10^{7} cpm	29

*With fuel in the storage pool or building
**Equivalent to 1.0×10^{-5} µCi/cc

F100035

J. M. STITT
CORRECTIVE ACTION MANAGER
S[illegible] - SQN

SEQUOYAH NUCLEAR PLANT - INCIDENT INVESTIGATION (II) ACTION ITEM EXTENSION/CLOSURE.

REFERENCE: II ITEM NO. II-S-92-080 ITEM No. VII.B.5

II ACTION ITEM SEQUENCE NO. TROI ITEM 09

I REQUEST THAT THE REFERENCE TROI ACTION BE;

_X_ CLOSED AS COMPLETE.

___ EXTENDED TO: _____

BASIS FOR EXTENSION/CLOSURE:

Setpoint and Scaling Documents (SSD's) have been issued for the Radiation Monitors with Tech. Spec. setpoints. The SSD's are as follows: 1,2-R-90-106B, 1,2-R-90-112B, 1,2-R-90-130, 1,2-R-90-131, 0-R-90-125, and 0-R-90-126.

(CLOSURE, LIST SUPPORTING DOCUMENTATION AS REQUIRED PER SSP 12.9. ATTACH COPY).

John M. Campbell	7/8/93
SIGNATURE (II/ACTION SUPERVISOR)	DATE
N/A	N/A
PROJECT ENGINEER (EXTENSIONS)	DATE

___ THIS EXTENSION DOES NOT IMPACT NUCLEAR SAFETY OR PLANT OPERABILITY.

___ ALTERNATE CORRECTIVE ACTION.

FI000180

N/A	
PLANT MANAGER (*)	DATE
A 7/8/93	
EVENT MANAGER (*)	DATE

(*) PLANT AND EVENT MANAGER'S APPROVAL (OR DEPT MGRS FOR CAT 3) IS REQUIRED FOR ALL ACTION DATE EXTENSIONS AND FOR CLOSURE WHEN ACTION TAKEN IS DIFFERENT FROM THE APPROVED CORRECTIVE ACTION IN THE FINAL EVENT REPORT.

TENNESSEE VALLEY AUTHORITY

DIVISION OF NUCLEAR ENGINEERING

SEQUOYAH NUCLEAR PLANT

SET POINT AND SCALING DOCUMENT

FOR INSTRUMENT LOOP NO.

1-LI-90-106B

SSD 1-R-90-106B
Page 3

	REVISION R0	R1	R2	R3	R4	R5
	DATE 2/15/93					
PARED						
IF						
NED						
ROVED						

FI900161

TENNESSEE VALLEY AUTHORITY

DIVISION OF NUCLEAR ENGINEERING

SEQUOYAH NUCLEAR PLANT

SE POINT AND SCALING DOCUMENT

INSTRUMENT LOOP NO.

2-R-90-106B

SSD 2-R-90-106B
Page 3

	REVISION R0	R1	R2	R3	R4	R5
	DATE 2/15/93					
PREPARED						
VIEWED					FI0003S2	
REVIEWED						
APPROVED						

TENNESSEE VALLEY AUTHORITY

DIVISION OF NUCLEAR ENGINEERING

SEQUOYAH NUCLEAR PLANT

SET POINT AND SCALING DOCUMENT

FOR INSTRUMENT LOOP NO.

1-R-90-112B

SSD 1-R-90-112B
Page 3

	REVISION R0	R1	R2	R3	R4	R5
	DATE 2/15/93					
PREPARED						
VERIFIED					FI000165	
REVIEWED						
APPROVED						

TENNESSEE VALLEY AUTHORITY

DIVISION OF NUCLEAR ENGINEERING

SEQUOYAH NUCLEAR PLANT

SET POINT AND SCALING DOCUMENT

FOR INSTRUMENT LOOP NO.

R-90-112B

SS02-R-90-112B
Page 3

	REVISION R0	R1	R2	R3	R4	R5
	DATE 2/15/93					
PREPARED	[illegible]					
VERIFIED	[illegible]				FI000164	
REVIEWED	MJ Schneider					
APPROVED	[illegible]					

TENNESSEE VALLEY AUTHORITY

DIVISION OF NUCLEAR ENGINEERING

SSD 1-R-90-130
Page 3

SEQUOYAH NUCLEAR PLANT

SET POINT AND SCALING DOCUMENT

FOR INSTRUMENT LOOP NO.

1-R-90-130

	REVISION. R0	R1	R2	R3	R4	R5
	DATE 2/1/93					
PREPARED						
VERIFIED					FI000195	
REVIEWED						
APPROVED						
ISSUED				58		

TENNESSEE VALLEY AUTHORITY

DIVISION OF NUCLEAR ENGINEERING

SSD 2-R-90-130
Page 3

SEQUOYAH NUCLEAR PLANT

SET POINT AND SCALING DOCUMENT

INSTRUMENT LOOP NO.

2-R-90-130

	REVISION. R0	R1	R2	R3	R4	R5
	DATE 2/15/93					
PREPARED	Joel de Sabla				FLOOD	
VERIFIED	H. Thomas					
REVIEWED	M J Smedsrud					
APPROVED	CBell					

TENNESSEE VALLEY AUTHORITY

DIVISION OF NUCLEAR ENGINEERING

SSO 1-R-90-131
Page 3

SEQUOYAH NUCLEAR PLANT

SET POINT AND SCALING DOCUMENT

FOR INSTRUMENT LOOP NO.

1-R-90-131

	REVISION. R0	R1	R2	R3	R4	R5
	DATE 2/15/93					
PREPARED	Jel de Sabla					
VERIFIED	K. Hanson				FI000[illegible]	
REVIEWED	MJ Schneidewind					
APPROVED	[illegible]					

TVA TENNESSEE VALLEY AUTHORITY

TENNESSEE VALLEY AUTHORITY

DIVISION OF NUCLEAR ENGINEERING

NE NUCLEAR ENGINEERING

SSD 2-R-90-131
Page 3

SEQUOYAH NUCLEAR PLANT

SET POINT AND SCALING DOCUMENT

FOR INSTRUMENT LOOP NO.

2-R-90-131

	REVISION.	R1	R2	R3	R4	R5
	DATE 2/15/93					
PREPARED	Jae de Sabla					
VERIFIED	A. Warner				FI0001SE	
REVIEWED	MJ Andrewitch					
APPROVED	[illegible]					
ISSUED	[illegible]			0		

TENNESSEE VALLEY AUTHORITY

DIVISION OF NUCLEAR ENGINEERING

SEQUOYAH NUCLEAR PLANT

SET POINT AND SCALING DOCUMENT

FOR INSTRUMENT LOOP NO.

0-R-90-125

SSD 0-R-90-125
Page 3

	REVISION R0	R1	R2	R3	R4	R5
	DATE 2/15/93					
PREPARED	[illegible]					
[illegible]IFIED	[illegible]				FI000[illegible]	
REVIEWED	[illegible]					
APPROVED	[illegible]					

TENNESSEE VALLEY AUTHORITY

DIVISION OF NUCLEAR ENGINEERING

SEQUOYAH NUCLEAR PLANT

SET POINT AND SCALING DOCUMENT

FOR INSTRUMENT LOOP NO.

0-P-90-126

SSD 0-P-90-126
Page 3

	REVISION R0	R1	R2	R3	R4	R5
	DATE 2/15/93					
PREPARED						
VERIFIED						
REVIEWED						
APPROVED						
ISSUED						

F1000170

J. H. HOLLAND
CORRECTIVE ACTION MANAGER
OPS 4D-SQN

SEQUOYAH NUCLEAR PLANT - INCIDENT INVESTIGATION (II) ACTION ITEM EXTENSION/CLOSURE.

REFERENCE: II ITEM NO. II-S-92-080
II ACTION ITEM SEQUENCE NO. 10

I REQUEST THAT THE REFERENCE TROI ACTION BE;

X CLOSED AS COMPLETE.

___ EXTENDED TO: _____

BASIS FOR EXTENSION/CLOSURE:

SSD'S ISSUED FOR FLOW LOOPS, SEE ATTACHED COVER SHEETS

FOR CLOSURE, LIST SUPPORTING DOCUMENTATION AS REQUIRED PER SSP 12.9. (ATTACH COPY)

[signature] 2/16/93
SIGNATURE (II ACTION SUPERVISOR)

N/A
PROJECT ENGINEER (EXTENSIONS)

___ THIS EXTENSION DOES NOT IMPACT NUCLEAR SAFETY OR PLANT OPERABILITY.

___ ALTERNATE CORRECTIVE ACTION.

TROI updated 2/17-93 PLS

N/A
PLANT MANAGER (*)

FI000171

(*) THE PLANT MANAGERS APPROVAL OF DEPT MGRS FOR CAT 3 IS REQUIRED FOR ALL ACTIONS ... FOR CLOSURE WHEN ACTION TAKEN IS DIFFERENT FROM THE ... CORRECTIVE ACTION IN THE FINAL EVENT.

TENNESSEE VALLEY AUTHORITY

DIVISION OF NUCLEAR ENGINEERING

SSD 0-F-90-206
Page 3

SEQUOYAH NUCLEAR PLANT

SET POINT AND SCALING DOCUMENT

FOR INSTRUMENT LOOP NO.

0-F-90-206

	REVISION. R0	R1	R2	R3	R4	R5
	DATE 10-9-92	11-25-92				
EPARED	T. Thompson	T. Thompson				
RIFTED	M. Hamm	M. D. Engle				
TED	Donald Jackson	D. Jackson				
ROVED	[illegible]	[illegible]				
UED	12/30/92	11-25-92				

F10 00172

TENNESSEE VALLEY AUTHORITY

DIVISION OF NUCLEAR ENGINEERING

SSD O-F-90-205
Page 3

SEQUOYAH NUCLEAR PLANT

SET POINT AND SCALING DOCUMENT

FOR INSTRUMENT LOOP NO.

O-F-90-205

	REVISION. R0	R1	R2	R3	R4	R5
	DATE 10-9-92	11-25-92				
PREPARED						
VERIFIED						
REVIEWED					F1000173	
APPROVED						
ISSUED	12/30/92	11-25-92				

TENNESSEE VALLEY AUTHORITY

DIVISION OF NUCLEAR ENGINEERING

SSD O-E-90-132A
Page 3

SEQUOYAH NUCLEAR PLANT

SET POINT AND SCALING DOCUMENT

FOR INSTRUMENT LOOP NO.

O-F-90-132A

	REVISION. R0	R1	R2	R3	R4	R5
	DATE 10-9-92	11-25-92				
PREPARED	T. Thompson	T. Th				
VERIFIED	[illegible]	[illegible]				
REVIEWED	[illegible]	[illegible]				
APPROVED	[illegible]	[illegible]				
ISSUED	10/30/92	11-25-92				

TENNESSEE VALLEY AUTHORITY

DIVISION OF NUCLEAR ENGINEERING

SSD 0-F-90-126
Page 3

SEQUOYAH NUCLEAR PLANT

SET POINT AND SCALING DOCUMENT

FOR INSTRUMENT LOOP NO.

0-F-90-126

	REVISION. R0	R1	R2	R3	R4	R5
	DATE 10-9-92	11-25-92				
PREPARED	T. Thompson	T. Th				
VERIFIED	K. Warner					
REVIEWED	Ronald L. Fabe					
APPROVED	C. Bell					
ISSUED	12/30/92					

TENNESSEE VALLEY AUTHORITY

DIVISION OF NUCLEAR ENGINEERING

SSD 0-F-90-125
Page 3

SEQUOYAH NUCLEAR PLANT

SET POINT AND SCALING DOCUMENT

FOR INSTRUMENT LOOP NO.

0-F-90-125

	REVISION. R0	R1	R2	R3	R4	R5
	DATE 10-9-92	11-25-9				
PREPARED	T. Thompson	T. Th				
VERIFIED	[illegible]	[illegible]				
REVIEWED	[illegible]	[illegible]				
APPROVED	[illegible]	[illegible]				
ISSUED	10/30/92	11-25-9				

TENNESSEE VALLEY AUTHORITY

DIVISION OF NUCLEAR ENGINEERING

SSD2-F-90-131
Page 3

SEQUOYAH NUCLEAR PLANT

SET POINT AND SCALING DOCUMENT

FOR INSTRUMENT LOOP NO.

2-F-90-131

	REVISION. R0	R1	R2	R3	R4	R5
	DATE 12-1-92					
PREPARED	T. Tiu					
VERIFIED	[illegible]					
REVIEWED	[illegible]					
APPROVED	[illegible]					

FIG 0177

TENNESSEE VALLEY AUTHORITY

DIVISION OF NUCLEAR ENGINEERING

SSO2-F-90-130
Page 3

SEQUOYAH NUCLEAR PLANT

SET POINT AND SCALING DOCUMENT

FOR INSTRUMENT LOOP NO.

Z-F-90-130

	REVISION. R0	R1	R2	R3	R4	R5
	DATE 12-1-92					
PREPARED	T. Tolson					
VERIFIED	T. Tolson				FLOOD	
REVIEWED	Ronald Jack					
APPROVED	[illegible]					

TENNESSEE VALLEY AUTHORITY

DIVISION OF NUCLEAR ENGINEERING

SSD L-F-90-131
Page 3

SEQUOYAH NUCLEAR PLANT

SET POINT AND SCALING DOCUMENT

FOR INSTRUMENT LOOP NO.

L-F-90-131

	REVISION. R0	R1	R2	R3	R4	R5
	DATE 12 1-92					
PREPARED	T. Thay					
VERIFIED	T. Hamm				F1000175	
REVIEWED	Ronald Fuchs					
APPROVED	C Brit					

TENNESSEE VALLEY AUTHORITY

DIVISION OF NUCLEAR ENGINEERING

SSD 1-F-90-130
Page 3

SEQUOYAH NUCLEAR PLANT

SET POINT AND SCALING DOCUMENT

FOR INSTRUMENT LOOP NO.

1-F-90-130

	REVISION. R0	R.	R2	R3	R4	R5
	DATE 12-1- 2					
PREPARED	T. Tolson					
VERIFIED	T. Tolson				F1000180	
REVIEWED	Ronald O Jackson					
APPROVED	[illegible]					

TENNESSEE VALLEY AUTHORITY

DIVISION OF NUCLEAR ENGINEERING

SSD 1-F-90-119
Page 3

SEQUOYAH NUCLEAR PLANT

SET POINT AND SCALING DOCUMENT

FOR INSTRUMENT LOOP NO.

1-F-90-119

	REVISION. R0	R1	R2	R3	R4	R5
	DATE 10-9-92	11-25-92				
PREPARED	T. Thomas	T. Th				
IFIED						
EVIEWED					F10001S1	
APPROVED						
ISSUED	12/30/92	11-25-		M4		

TENNESSEE VALLEY AUTHORITY

DIVISION OF NUCLEAR ENGINEERING

SSD 1-F-90-99
Page 2

SEQUOYAH NUCLEAR PLANT

SET POINT AND SCALING DOCUMENT

FOR INSTRUMENT LOOP NO.

1-F-90-99

	REVISION. R0	R1	R2	R3	R4	R5
	DATE 10-9-92	11-25-9[illegible]				
PREPARED	T. Thompson	T. Th[illegible]				
IFIED	[illegible]	[illegible]				
REVIEWED	[illegible]	[illegible]			F10001	S[illegible]
APPROVED NMP	[illegible]	[illegible]				
ISSUED	10/30/92	11/24/[illegible]		75		

TENNESSEE VALLEY AUTHORITY

DIVISION OF NUCLEAR ENGINEERING

SSO 0-F-90-101
Page 3

SEQUOYAH NUCLEAR PLANT

SET POINT AND SCALING DOCUMENT

FOR INSTRUMENT LOOP NO.

0-F-90-101

	REVISION. R0	R1	R2	R3	R4	R5
	DATE					
PREPARED						
VERIFIED						
REVIEWED					PROPOSE	
APPROVED						
TSCIED						

TENNESSEE VALLEY AUTHORITY

DIVISION OF NUCLEAR ENGINEERING

SSO 2-F-90-112
Page 3

SEQUOYAH NUCLEAR PLANT

SET . 'INT AND SCALING DOCUMENT

FOR NSTRUMENT LOOP NO.

2-F-.^-112

	REVISION. PO	R1	R2	R3	R4	R5
	DATE					
P ARED	M. D. Eudy					
DRAFTED	L. [illegible]					
REVIEWED	Ronald Jackson					
APPROVED	[illegible]					

FI0001.SC

TENNESSEE VALLEY AUTHORITY

DIVISION OF NUCLEAR ENGINEERING

SSO 1-F-90-112
Page 3

SEQUOYAH NUCLEAR PLANT

SET POINT AND SCALING DOCUMENT

FOR INSTRUMENT LOOP NO.

1-F-90 112

	REVISION. R0	R1	R2	R3	R4	R5
	DATE					
PARED						
VERIFIED						
REVIEWED					FIOD ISS	
APPROVED						

TENNESSEE VALLEY AUTHORITY

DIVISION OF NUCLEAR ENGINEERING

SEQUOYAH NUCLEAR PLANT

SE PC T AND SCALING DOCUMENT

FOR INSTRUMENT LOOP NO.

2-F 90-119

SSD 2-F-90-119
Page 3

	REVISION R0	R1	R2	R3	R4	R5
	DATE					
PREPARED						
VERIFIED						
REVIEWED						
APPROVED						

TENNESSEE VALLEY AUTHORITY

DIVISION OF NUCLEAR ENGINEERING

SSD 1-F-90-106
Page 3

SEQUOYAH NUCLEAR PLANT

SET POINT AND SCALING DOCUMENT

FOR INSTRUMENT LOOP NO.

1-F-90-106

	REVISION. R0	R1	R2	R3	R4	R5
	DATE					
PREPARED	M. D. Engle					
VERIFIED	K. [illegible]					
REVIEWED	Ronald F. Jackson					
APPROVED	[illegible]					

TENNESSEE VALLEY AUTHORITY

DIVISION OF NUCLEAR ENGINEERING

SEQUOYAH NUCLEAR PLANT

SET POINT AND SCALING DOCUMENT

FCV INSTRUMENT LOOP NO.

2-FT-90-99

SSD 2-F-90-99
Page 3

	REVISION R0	R1	R2	R3	R4	R5
	DATE					
PREPARED	[illegible]					
VERIFIED	[illegible]					
REVIEWED	[illegible]					
APPROVED	[illegible]					

F10001.S

TENNESSEE VALLEY AUTHORITY

DIVISION OF NUCLEAR ENGINEERING

SSO 2-F-90-106
Page 3

SEQUOYAH NUCLEAR PLANT

SET POINT AND SCALING DOCUMENT

FOR INSTRUMENT LOOP NO.

2-F-90-106

	REVISION. R0	R1	R2	R3	R4	R5
	DATE					
PARED	M.D. Eudy					
VERIFIED	L. [illegible]					
REVIEWED	Ronald Jackson				FI0001S0	
APPROVED	[illegible]					

H. Holland, OPS 4D-SQN

SEQUOYAH NUCLEAR PLANT - INCIDENT INVESTIGATION (II) ACTION ITEM EXTENSION/CLOSURE

Reference: II Item No. S-92-080
II Action Item Sequence No. 11

I request that the referenced TROI action be /✓/ closed as complete.

/ / extended to _____.

Basis for extension/closure:

Safety limits for the radiation monitors listed in TECH SPEC. 3.3.3.1 and Table 3.3-6 are provided in the attached calculations. 6/1/93

r closure list supporting closure documentation as required per SSP.12.9 (Attach Copy).

VA Brims / 6/1/93
SIGNATURE (II/ACTION SUPERVISOR) / DATE

/ / This extension does not impact nulcear safety or plant operability.

/ / Alternate Corrective Action.

R.W. Fatenberry / 6/1/93
EVENT MANAGER / DATE

_____ / _____
PLANT MANAGER / DATE
OR DEPT MGR FOR CATEGORY 3

The responsible organization's and Plant Manager's approval (or Dept. Mgr's for Category 3) is required for all action data extensions and for closure when action taken s difference from the approved corrective action in the Final Event Report.

PMB

TROI updated 6-2-93 PLS

L090205/1317

F1000130

... Control Room Intake Monitor (0-RM-90-125, 126) | PLANT/UNIT SQN 1&2

Setpoint

PREPARING ORGANIZATION	KEY NOUNS (Consult CCRIS LIST)
DNE/NEB/APS3	Radiation Monitor,MHA LOCA, FHA, Control Room

BRANCH/PROJECT IDENTIFIERS: SQNAPS3-053

Each time these calculations are issued, preparers must ensure that the original (R0) RIMS accession number is filled in.

Rev	(for RIMS use)	RIMS accession number
R0	870727F0013	B45 870530 238
R1		
R2		
R3		

APPLICABLE DESIGN DOCUMENT(S): N/A

SAR SECTION(S): 11.4 | UNID SYSTEM(S): 90

Revision 0	R1	R2	R3
ECN No. (or indicate Not Applicable) N/A	N/A		
Prepared M.C. Berg	6/1/93		
Checked W.M. Bennett	6-1-93		
Reviewed K.D. Keith, Jr.	6-1-93		
Approved F.A. Koontz, Jr.	W.G. Elder		
Date 5/30/87	6/1/93		
List all pages added by this revision	See Rev Log		
List all pages deleted by this revision	See Rev Log		
List all pages changed by this revision	See Rev Log		

TVA 10534 If more space required

Safety-related? Yes [X] No [ ]

Statement of Problem

Determine if the 400 cpm setpoint for the main control room air intake monitor (0RM-90-125, 126) is acceptable, exclusive instrument and sampling inaccuracies. Furt determine the safety limit for the subject monitors.

These calculations contain unverified assumption(s) that must be verified later. Yes [ ] No [X]

Calculation contains special requirements or limiting conditions. Yes [ ] No [X]

Abstract

No documentation had been found to support the setpoint value given in the SQN Tech Spec 3.3.3.1 for the main control room intake monitors (0-RM-90-125, 126). These detectors were installed to protect the operators by isolating the control room in the event an accident released significant amounts of radioactivity. This calculation is performed to determine if the current setpoint of 400 counts per minute (cpm) is acceptable, exclusi of instrument and sampling inaccuracies. R1 is performed to determine the safety limit for the subject monitors.

The procedure for this calculation consisted of several parts. The first part of this calculation determined the count rate expected at the beginning of a LOCA to see if this value was greater than the setpoint. The radioactive releases due to a maximum hypothetical loss of coolant accident (MHA-LOCA) were taken from the initial time intervals from a modification of the SQNAPS3-067 R1 STP run. These intervals were chosen to be representative of tl accident spectrum at the beginning of the LOCA.

T[illegible]econd part of the calculation determined the count rate for the beginning of the fuel handling accident (FHA). Th[illegible] was done in the same manner as the first part. The activities were taken from the first three time steps of the STP un from GENNAL3-008.

(Continued on page 2)

84

F1000192

[ ] Microfilm and store calculations in RIMS Service Center

Rev 5/21/93
MW 5.24.93

The third part of this calculation determined the control room operator doses for the entire duration of a MHA-LOCA as if the main control room never isolated. The ratio of the 10CFR50 Appendix A GDC 19 limit of 30 rem inhalation to this dose became a normalization factor. This normalization factor was then multiplied by the release during the 30-46 sec interval to obtain the normalized activity for which the count rate could be determined. The count rate determined in this way gave the initial average count rate at which the operators would receive 30 rem inhalation for the duration of the accident. R1

The current TS setpoint value of 400 cpm for the MCR intake monitors is sufficiently adequate to protect MCR operators in accordance with the 10 CFR 50, App.A, GDC-19 criteria.

Further, the following safety limits have been determined for the subject monitors in terms of MCR intake air concentration (uCi/cc) and MCR intake monitor count rate (cpm):

0-RM-90-125, 12.. Safety Limits:

MCR Intake Air Conc.	**1.81E-3 uCi/cc**
MCR Intake Monitor	**9.94E4 cpm**

Total Pages R1: 42 R1

RM-90-106/112 and RM-90-130/131

SQN 182

PREPARING ORGANIZATION	KEY NOUNS (Consult CCRIS LIST)
M/NE Dept.	Rad Monitor, STP, FENCDOSE, COROD, Setpoint

BRANCH/PROJECT IDENTIFIERS: APS3-116

Each time these calculations are issued, preparers must ensure that the original (R0) RIMS accession number is filed in.

Rev	(for RIMS use)	RIMS accession number
R0	930419G0001	B87 930416 002
R1		
R2		
R3		

APPLICABLE DESIGN DOCUMENT(S): N/A

SAR SECTION(S): 11.4 | UNID SYSTEM(S): 90

Revision 0	R1	R2	R3
ECN No. (or indicate Not Applicable) N/A	N/A		
Prepared R.M. Nicoll	6/1/93		
Checked M.C. Berg			
Reviewed M.C. Berg			
Approved R.H. Bryan	W.A. Eno		
Date 4/16/93	6/1/93		
Use for this revision: List all pages added by this revision	See Rev Log		
Use for this revision: List all pages deleted by this revision	See Rev Log		
Use space squared: List all pages changed by this revision	See Rev Log		

Safety-related? Yes [X] No [ ]

Statement of Problem

Determine the adequacy of existing Tech Spec setpoints, exclusive of instrument and sampling inaccuracies, for RM-90-106/112 and RM-90-130/131 for limiting doses to 10CFR100 and GDC 19 during a small LOCA with containment purge. Establish safety limits for the subject monitors.

These calculations contain unverified assumption(s) that must be verified later. Yes [ ] No [X]

Calculation contains special requirements or limiting conditions. Yes [ ] No [X]

Abstract

This calculation determines the adequacy of existing SQN Tech Spec setpoints for containment (CTM) monitors RM-90-106/112 and RM-90-130/131, exclusive of instrument and sampling inaccuracies. This was done as part of the corrective action to the radiation monitoring incident investigation reported in II-S-92-80. R1 was performed to establish safety limits for the subject monitors. These monitors initiate a SVI upon the detection of high radiation in CTM atmosphere and purge exhausts. This safety objective is specifically applicable to a small break LOCA event concurrent with CTM purging.

Source terms for the small LOCA consisted of a release of 100% of the RCS activity with a factor of 10 iodine spike. Total release to the environment consisted of CTM leakage (0.25%/day, first 24 hr, 0.125%/day, thereafter) and CTM purge 14000 cfm of lower CTM, case 1 and 14000 cfm of upper CTM (case 2).

STP was used to calculate radioactive purge concentrations at various times post-small LOCA. These concentrations were compared with those in Table 3.3.6 of the SQN TSs. FENCDOSE and COROD were used to calculate the control room and offsite doses due to the event to determine compliance with 10 CFR 100 and GDC 19.

Results of this calculation are given below.

F1000197

Total pages R0: 36

Total pages R1: 40

☐ Microfilm and store calculations in RIMS Service Center

Microfilm and destroy

ABSTRACT (CONT'D)

e SQN TS setpoints (8.5E-3 µCi/cc, NG and 1.5E-5 µCi/cc, Particulate) for e RM-90-106 and RM-90-130 monitors are sufficiently low to initiate a timely CVI during a small LOCA with concurrent Lower CTM (LCTM) purging (Case 1). This event resulted in doses that are small fractions of the 10CFR100 and GDC 19 dose criteria.

Thus, the TS setpoints have substantial margin to limit offsite and control room doses to within the dose criteria of 10CFR100 and GDC 19 for this event.

For a small LOCA during UCTM purge (Case 2), the SQN TS setpoints for a CVI will not be exceeded for the noble gas channel of the RM-90-112 and RM-90-131 monitors. The maximum NG concentration attained during this event is 5.88E-3 µCi/cc vs. the 8.5E-3 µCi/cc T6 setpoint, or a factor of 0.69 below the TS setpoint. However, the doses due to this event are small fractions of the 10CFR100 and GDC 19 dose criteria.

Thus, although the SQN TS noble gas setpoint is not exceeded for this event, the setpoint is sufficiently low to provide a substantial margin in maintaining offsite and control room operator doses to well within the dose criteria of 10CFR100 and GDC 19.

This calculation also demonstrates that the TS setpoints will be exceeded for the particulate channel of the RM-90-112 monitor during the small LOCA with UCTM purge. Therefore, the current particulate setpoints are adequately low to ensure a timely CVI during this event.

In summary, all of the current SQN TS CTM monitor setpoints are adequate to ensure compliance with 10CFR100 and GDC 19

This calculation also establishes the following safety limits for the subject monitors:

SAFETY LIMITS

Monitor RM-90-	Safety Limit (µCi/cc)	Safety Limit (cpm)
106 Noble Gas	1.20E+0	4.49E+7
106 Part.	1.21E-2	1.09E+10
112 Noble Gas	9.71E-2	3.60E+6
112 Part.	1.18E-3	1.07E+9
130/131 Noble Gas	9.71E-2	1.58E+5

TITLE	BASIS FOR DETERMINING AN ACCEPTABLE SET POINT FOR THE SPENT FUEL POOL RADIATION MONITOR SET POINT	PLANT/UNIT	Sequoyah 1 & 2
PREPARING ORGANIZATION	NE/M/NE/SQEP	KEY NOUNS (Consult RIMS DESCRIPTORS LIST)	Spent Fuel Pool, Monitor Set Point
BRANCH/PROJECT IDENTIFIERS	TI-RPS-181 RPS-3147	Each time these calculations are issued, preparers must ensure that the original (R0) RIMS accession number is filled in.	
APPLICABLE DESIGN DOCUMENT(S)	SQN-DC-V-9.0	SAR SECTION(S): N/A	UNID SYSTEM(S): 90

Rev	(for RIMS' use)	RIMS accession number
R0	841207T0021	NRR 841206 237
R1	900212E0005 (5)	B87 900116 007
R—		
R—		

Revision 0	R1	R2	R3
ECN No. (or Indicate Not Applicable) N/A	N/A		
Prepared M. K. Brandon			
Checked W. M. Bennett	12/6/84		
Reviewed F. A. Koontz, Jr	12/6/84		
Approved G. E. German			
Date 12/6/84	11-6-		
List all pages added by this revision.	10.1.		
List all pages deleted by this revision.	N/A		
List all pages changed by this revision.	~~N/A~~ 1-8 12/21/87		

Safety-related? Yes ☑ No ☐

Statement of Problem

Determine the relationship between the dose rate seen at the spent fuel pool radiation monitors (RE-90-102 and 103) due to a postulated fuel handling accident and the resulting unfiltered offsite thyroid dose.

Abstract

These calculations contain an unverified assumption(s) that must be verified later. Yes ☐ No ☑

An analysis was performed to determine the relationship between the dose rate seen at the spent fuel pool radiation monitors (RE-90-102 and 103) due to a postulated fuel handling accident and the resulting unfiltered offsite thyroid dose. The purpose of this analysis is to determine if a higher set point for the above monitors can be justified.

Occasional isolations of the auxiliary building ventilation systems have occurred due to "spurious" monitor readings in excess of the current set point, ~~15~~ 10 mR/hr. It may be possible to avoid these "spurious" isolations by increasing the monitors' set point without raising the offsite dose to an unacceptable level from releases which do not trigger isolation. Failure to isolate the auxiliary building will affect only the thyroid dose since the auxiliary building gas treatment system (ABGTS) filters only affect the iodines. From the relationship between the monitor reading and the unfiltered offsite thyroid dose, the acceptability of a set point can be assessed on the basis of the offsite radiological consequences of a fuel handling accident. This analysis was requested by NUC PR.

F1000195

☐ Microfilm and store calculations in RIMS Service Center. Microfilm and destroy. ☐

act (continued)

The postulated fuel handling accident evaluated was based on the parameters presented in Regulatory Guide 1.25. The computer code STP was used to decay the activity in a fuel assembly for 100 hrs post shutdown. The photon spectrum also generated in the STP run was used in a modified version of QAD-P5Z which determined the exposure rate (mR/hr) at the monitors as the activity released in the accident rose to the surface of the spent fuel pool. The unfiltered offsite thyroid dose due to this release was calculated by hand.

The ratio of the monitor reading to the unfiltered offsite thyroid dose is 20 mR/hr/REM thyroid Based on this ratio a set point as high as 580 mR/hr would be sufficient to meet ANS 51.1 standards (i.e., 10 percent of 10CFR100 limits of 30 REM thyroid).

The computer output is stored on micro fiche Nos. TVA-F-H-501 and 502.

J. H. Holland, OPS 4D-SQN

SEQUOYAH NUCLEAR PLANT - INCIDENT INVESTIGATION (II) ACTION ITEM EXTENSION/CLOSURE

Reference: II Item No. II-S-92-080
II Action Item Sequence No. 01

I request that the referenced TROI action be [ ] closed as complete.

[X] extended to 11/30/92.

Basis for extension/closure:

Additional Time is need to get Concurrence on Actions

For closure list supporting closure documentation as required per SSP.12.9 (Attach Cop

R. W. Fortenberry / 11/24/92
SIGNATURE (II/ACTION SUPERVISOR) / DATE

TROI updated 11-25-92 PLS

[✓] This extension does not impact nuclear safety or plant operability.

[ ] Alternate Corrective A ion.

RESPONSIBLE ORG. / DATE

PLANT MANAGER / DATE
OR DEPT MGR FOR CATEGORY 3

The responsible organization's and Plant Manager's approval (or Dept. Mgr's for Catego is required for all action date extensions and for closure when action taken is ferent from the app oved corrective action in the Final Event Report.

JHH:PMB

FI000197

1159y

. H. Holland, OPS 4D-SQN

SEQUOYAH NUCLEAR PLANT - INCIDENT INVESTIGATION (II) ACTION ITEM EXTENSION/CLOSURE

Reference: II Item No. II592080
II Action Item Sequence No. 01

I request that the referenced TROI action be [ ] closed as complete.

[X] extended to 12/8/92.
BHH portal con w/RSB 12/2/92

Basis for extension/closure:

Please extend sequence 01 to allow additional time for Plant Manager to review and approval PERP has been completed and comments received.

For closure list supporting documentation as required per SSP.12.9 (Attach Copy).

R.W. Fortenberry 12/2/92
SIGNATURE (II/ACTION SUPERVISOR) / DATE

TROI updated 12-2-92

[✓] This extension does not impact nuclear safety or plant operability.

[ ] Alternate Corrective Action.

N/A / DATE

RESPONSIBLE ORG.

[signature] 12-1-92
PLANT MANAGER / DATE
OR DEPT MGR FOR CATEGORY 3

The responsible organization's and Plant Mgr's approval (or Dept. Mgr's for Category 3) is required for all action date extensions and for closure when action taken is different from the approved corrective action in the Final Event Report.

PMB

59y

FI000189

01

J. H. Holland, OPS 4D-SQN

SEQUOYAH NUCLEAR PLANT - INCIDENT INVESTIGATION (II) ACTION ITEM EXTENSION/CLOSURE

Reference: II Item No. II592080
II Action Item Sequence No. 09

I request that the referenced TROI action be [ ] closed as complete.
[X] extended to 7/2/93.

Basis for extension/closure:

See that attached

For closure list supporting closure documentation as required per SSP.12.9 (Attach Copy

R.W. Fortenberry 14/22/93 per telecon with Vince Bianco and Eddie Turner.
SIGNATURE (II/ACTION SUPERVISOR) / DATE

[ ] This extension does not impact nuclear safety or plant operability.

[X] Alternate Corrective Action.

R.W. Fortenberry 14/22/93 — RESPONSIBLE ORG. / DATE

for R.W. Fortenberry 14/22/93 — PLANT MANAGER OR DEPT MGR FOR CATEGORY 3 / DATE

The responsible organization's and Plant Manager's approval (or Dept. Mgr's for Category 3) is required for all action date extensions and for closure when action taken is different from the approved corrective action in the Final Event Report.

TROI updated

JHH:PMB

1159y

F1000189

02

e work performed as a results of the action in Sequence No. 08 was not adequate to meet the intent of the action. Open a new action reading "Define the rad monitor safety limits for the rad monitors in Tech Spec 3.3.3.1 and Table 3.3-6." This action has been coordinate with VAB and is due 6/1/93. The action of Sequence No. 09 follows this new action and should be extended to 7/2/93. This extension has been coordinated with EMT.

4/22/93

92

Holland, OPS 4D-SQN

SEQUOYAH NUCLEAR PLANT - INCIDENT INVESTIGATION (II) ACTION ITEM EXTENSION/CLOSURE

Reference: II Item No. S-92-80

II Action Item Sequence No. 8, 9

I request that the referenced TROI action be [ ] closed as complete. Item 8 - 4/16/93

[X] extended to Item 9 - 5/20/93

Basis for extension/closure:

Due to the current work load including the forced outage, an extension request from 4/1/93 to 4/16/93 for Item 8 and from 4/30/93 to 5/20/93 for Item 9 is necessary. A technical basis for this extension is attached.

For closure list supporting closure documentation as required per SSP.12.9 (Attach Copy).

3/24/93 VABimo / 3/24/93

SIGNATURE (II/ACTION SUPERVISOR) / DATE

[X] This extension does not impact nuclear safety or plant operability.

[ ] Alternate Corrective Action.

R.W. Fortenberry / 3/25/93

for PLANT MANAGER / DATE

TROI updated 3-25-93 pff

The plant managers approval is required for all action date extensions and for closure when action is different from the approved corrective action in the Final Event Report.

MD

--025N08--ID 51

F100030

94

Holland, OPS 4D-SQN

SEQUOYAH NUCLEAR PLANT - INCIDENT INVESTIGATION (II) ACTION ITEM EXTENSION/CLOSURE

Reference: II Item No. II-S-92-80

II Action Item Sequence No. 8, 9

I request that the referenced TROI action be [ ] closed as complete.

[X] extended to 4-1-93. (8) 4-30-93 (9)

Basis for extension/closure:

See the attached

For closure list supporting closure documentation as required per SSP.12.9 (Attach Copy).

VA Blaw, 1/26/93

SIGNATURE (II/ACTION SUPERVISOR), DATE

[X] This extension does not impact nuclear safety or plant operability.

[ ] Alternate Corrective Action.

R.W. Fortenberry, 2/8/93

for PLANT MANAGER, DATE

2/8/93 Based on Admin controls in place until final #'s calculated.

The plant managers approval is required for all action date extensions and for closure when action is different from the approved corrective action in the Final Event Report.

MD T

PL 08--ID 51

F1000202

95

Resolving the subject task will require an extensive review of each TECH SPEC radiation monitor setpoint support documentation; see the attached TECH SPEC Tables 3.3-6 for Units 1 and 2. A preliminary review of the supporting documentation for the Control Room radiation monitors setpoint indicates a TECH SPEC Change Request in accordance with SSP-4.1 will be required. Due to the current work load and the approaching U1C6 refueling outage, an extension request until ~~July 16,~~ April 1, 1993 is warranted.

Delaying this task until the said date will not have an impact on plant hardware, procedures, safety, or operability. A brief discussion for each TECH SPEC setpoint is provided below to support this position.

FUEL STORAGE POOL AREA MONITOR

The setpoint for the subject monitor was changed from 15 to 200 mr/hr by TECH SPEC CHANGE NO 104 (S01 850529904). This change was necessary to eliminate spurious actuations of the Auxiliary Building Gas Treatment System. The 200 mr/hr setpoint was determined to be more than reasonably conservative and would not result in a risk to public health and safety. Therefore, the existing TECH SPEC for these monitors will not present a risk to plant personnel or the public.

CONTAINMENT PURGE AND VENTS MONITORS

The setpoint of these effluent monitors has been less than or equal to 8.5E-3 uCi/cc based on Xe-133 since Sequoyah Units 1 and 2 were originally licensed, see Reference NUREG-0658 and NUREG-0789, respectively. The Offsite Dose Calculation Manual (ODCM) indicates the total body dose shall be limited to 500 mr/yr which is equivalent to 3.32E+5 uCi/sec to comply with NRC 10CFR20.106 criteria. The following equation will convert the setpoint value from uCi/cc to uCi/sec so a comparison can be made

SETPOINT VALUE	PURGE MAX FLOWRATE	UNIT CONVERTER	UNIT CONVERTER

(8.5E-3 uCi/cc)(14,000ft^3/min)(min/60sec)(28317CC/ft^3).

This equation indicates the containment monitors setpoint value is equivalent to 5.62E+4 uCi/sec which is approximately 17% of 10CFR20.106 equivalent value. The above equation and equivalent values of Xe-133 are consistent with the methodologies used in TI-30 , Manual (ODCM) Compliance- Method A.

FI000205

96

CONTAINMENT PARTICULATE MONITORS

The setpoint of these effluent monitors has been less than equal to 1.5E-5 uCi/cc based on Co-58 since Sequoyah Units 1 and 2 were originally licensed. ODCM indicates the total dose to any organ shall be limited to 1500 mr/yr which is equivalent to 9.74E+1 uCi/sec to comply with NRC 10CFR20.106 criteria. In the same manner, the above equation was used to convert the cobalt dose rate for comparison purposes. Thus, 1.5E-5 uCi/cc equivalent value was determined to be 9.91E+2 uCi/sec, however, the radiation monitor is presently set at 40% of this value (3.96E+1 uCi/cc). Clearly the current TECH SPEC value is bounded by the release rate criteria specified by the NRC. It is also noted these monitors are required for Reactor Coolant Leakage Detection as specified by 10CFR50 Appendix A GDC-30 and are not required for adherence to 10CFR20 or 10CFR100.

CONTROL ROOM ISOLATION MONITORS

The setpoint of these effluent monitors has been less than or equal to 400 cpm since Sequoyah Units 1 and 2 were originally licensed. The NRC 10CFR50 GDC-19 specifies that an operator in the MCR shall not exceed a dose of 5 rem to the whole body for the duration of an accident. Using the methodologies in the ODCM, 5 rem was converted to an equivalent value in cpm for comparison purposes. Based on a 40 hour work week for 52 weeks, 5 rem was determined to be equivalent to 386 cpm. This value does not bound the 400 cpm value provided in the TECH SPEC. However, the current setpoints of the MCR monitors were reduced to 253 cpm (+/- 129 cpm due to sensing pressure inaccuracy) by TI-18 Radiation Monitors Revision 24 prior to II-S-92-80. Therefore, no immediate actions are required.

CONCLUSION

The setpoint for the Fuel Pool Storage Area was documented in TECH SPEC CHANGE NO 104 to eliminate spurious actuations of the Auxiliary Building Gas Treatment System. The setpoint was changed from 15 to 200 mr/hr. The Containment Purge, Gaseous, and Particulate Monitors setpoints have remained the same since Sequoyah Units 1 and 2 were originally licensed. The above evaluation has determined the existing setpoints will not result in a dose that will exceed the NRC's 10CFR20 or 10CFR100 criteria. Further reviews are necessary to provide the documentation to support the setpoint values of the above monitors.

This evaluation has also determined the MCR monitors setpoint value of 400 cpm remained the same since Sequoyah Units 1 and 2 were originally licensed. This value was determined not to be bounded by 386 cpm which is equivalent to the 5 rem operator dose specified by 10CFR50 Appendix A

97 FI000204

IIS92080 TROI SEQUENCE 8:

GDC-19. However, the current setpoints of the MCR monitors were reduced to 253 cpm by TI-18 , Radiation Monitors. Therefore, no immediate actions are required however, a TECH SPEC change is warranted to reduce the existing TECH SPEC value.

1/25/93
Don Amos
Nuclear Chemistry
Reviewer

1/25/93
Betsy Elford-Lee
Corp. Environmental Protection
Reviewer

1-25-93
Jeff K. Newt
Technical Sup
Reviewer

1/25/93
Calvin W. Burrell Jr./Date
Nuclear Engineering
Paperer

1/26/93
Vinc A. Bianco/Date
Nuclea Engineering
Reviewer

FI000201

98

TABLE 3.3-6

RADIATION MONITORING INSTRUMENTATION

INSTRUMENT	MINIMUM CHANNELS OPERABLE	APPLICABLE MODES	ALARM/TRIP SETPOINT	MEASUREMENT RANGE	ACTION
1. AREA MONITOR					
a. Fuel Storage Pool Area	1	*	$\leq$ 200 mR/hr	10^{-1} -10^{4} mR/hr	26
2. PROCESS MONITORS					
a. Containment Purge Air	1	1, 2, 3, 4 & 6	$\leq 8.5 \times 10^{-3}$ µCi/cc	10 - 10^{7} cpm	28
b. Containment					
i. Gaseous Activity					
a)Ventilation Isolation	1	ALL MODES	$\leq 8.5 \times 10^{-3}$ µCi/cc	10 - 10^{7} cpm	28
b)RCS Leakage Detection	1	1, 2, 3 & 4	N/A	10 - 10^{7} cpm	27
ii. Particulate Activity					
a)Ventilation Isolation	1	ALL MODES	$\leq 1.5 \times 10^{-5}$ µCi/cc	10 - 10^{7} cpm	28
b)RCS Leakage Detection	1	1, 2, 3 & 4	N/A	10 - 10^{7} cpm	27
c. Control Room Isolation	1	ALL MODES	$\leq$ 400 cpm**	10 - 10^{7} cpm	29

R116 R64 R116 R16 R116

*With fuel in the storage pool or building
**Equivalent to 1.0×10^{-5} µCi/cc

R116

F100030E

TABLE 3.3-6
RADIATION MONITORING INSTRUMENTATION

INSTRUMENT	MINIMUM CHANNELS OPERABLE	APPLICABLE MODES	ALARM/TRIP SETPOINT	MEASUREMENT RANGE	ACTION	
1. AREA MONITOR						R102
a. Fuel Storage Pool Area	1	*	$\leq$200 mR/hr	10^{-1} - 10^{4} mR/hr	26	R52
2. PROCESS MONITORS						R102
a. Containment Purge Air	1	1, 2, 3, 4 & 6	$\leq 8.5 \times 10^{-3}$ µCi/cc	10 - 10^{7} cpm	28	
b. Containment						
i. Gaseous Activity						
a)Ventilation Isolation	1	ALL MODES	$\leq 8.5 \times 10^{-3}$ µCi/cc	10 - 10^{7} cpm	28	
b)RCS Leakage Detection	1	1, 2, 3 & 4	N/A	10 - 10^{7} cpm	27	
ii. Particulate Activity						
a)Ventilation Isolation	1	ALL MODES	$\leq 1.5 \times 10^{-5}$ µCi/cc	10 - 10^{7} cpm	28	
b)RCS Leakage Detection	1	1, 2, 3 & 4	N/A	10 - 10^{7} cpm	27	
c. Control Room Isolation	1	ALL MODES	$\leq$ 400 cpm**	10 - 10^{7} cpm	29	R102

* With fuel in the storage pool or building

** Equivalent to 1.0×10^{-5} µCi/cc. R102

FI000207

NER ITEM EVALUATION

NER NO. _____
TROI ID _____

(A) APPLICABILITY EVALUATION

(1) TITLE: II-5-92-080, Inadequate Setpoint Calculation For Radiation Monitors.

(2) Keyword(s): SETPOINT, CALIBRATION, RADIATION MONITOR

(3) Actions: BFN A BLN A SQN PA WBN A Other ___

(4) Action Priority: 30 days ___ 90 days ✓ Other ___

(A) - Action
(I) - Info
(NA) - Not Applicable
(PA) - Previously Addressed

(5) Initial Screening Reviewer: W.C. Lowery Date: 1/6/93
(6) Screening Mtg Date: 1/7/93

Applicability Explanation/Required Action: Potential exists for a similar interpretation of IN 82-49 at each site. Action to BFN and BLN. Additional information to WBN under the current evaluation of IN 82-49.

(7) Related Documents: IEN 82-049, 327/92019

(8) Incident Investigations/NOVs:
Network Entry Required: YES [ ] NO [✓]
Repeat Event: YES [ ] NO [✓]

Key Issues Code: X, XA, XB UB

(9) Significance Code: S-13 Root Cause Code: CA, CB, CD, CF, AP, AU

NER Preparer: _____ Ext _____ Date _____
NER Manager: _____ Ext 6672 Date 1/10/93

(B) NER ITEM RESPONSE SUMMARY

(1) NER item is applicable: Y [ ] N [ ]
(2) SCAR/PER Initiated: Y [ ] N [ ]
(3) Implementation Date: _____
(4) Item Needs Further Review: YES [ ] [ ] (If yes, explain below.)
(5) Action: P [ ] M [ ] T [ ] [ ] O [ ]
(6) Response Summary: _____

(7) Item Closed: YES [ ] NO [ ]

(8) Responsible Manager: _____ Ext _____ Date _____

FI000200

8/28/92

NER DATA ENTRY FORM

NER No.: _____ TROI I.D. No.: _____

Category Subject: INHOUSE EV Document No.: II-S-92-080

Responsible Organization: _____

NER Subject/Site/Responsible Organization: Inadequate Setpoint Calculations for Radiation Monitors/SQN/RC

NER Description: It was discovered that certain Technical Specification Gaseous Radiation Monitors could have had their setpoints calculated in a non-conservative manner. The subject Radiation Monitors setpoints do not account for the system design which has the gas sample chamber upstream of the sample pump, thus a stronger vacuum in the detector gas chamber.

EQIS Information:

Function: MON System: 090 Manufacturer: G063

Key Issues: _____

References:

CAR 327/92019

FI000205

12/03/91

102

TO : Those indicated

FROM : M. J. Fecht, Manager, Nuclear Experience Review, LP 5B-C

DATE :

SUBJECT: TRANSMITTAL OF NER ITEM FOR ACTION OR INFORMATION - II-5-92-080

Attached is an NER item being forwarded to each of the indicated organizations for action or information as required. Please provide your response, if action is required for your organization, by _____. If action is taken on an NER item that was sent to you for information, notify Corporate NER to correct the assignment.

	ACTION	INFORMATION
Browns Ferry Nuclear Plant, NER Supervisor	[✓]	[ ]
Sequoyah Nuclear Plant, NER Supervisor	[ ]	[ ]
Watts Bar Nuclear Plant, NER Supervisor	[ ]	[✓]
Bellefonte Nuclear Plant, J. E. Wills, OSE-1, BLN	[✓]	[ ]
_____	[ ]	[ ]
Nuclear Assurance, Licensing and Fuels:		
R. R. Clabo, BR 6A-C	[ ]	[ ]
M. G. Sumner, BR 4E-C	[ ]	[ ]
M. L. Turner, STC 1I, Sequoyah	[ ]	[ ]
Nuclear Projects:		
F. C. Prawlocki, LP 4J-C (xc: _____)	[ ]	[ ]
Operations Services:		
G. L. Piser, LP 5D-C	[ ]	[ ]
C. L. Kelley, CST 7A-C	[ ]	[ ]
C. G. Hudson, LP 5D-C	[ ]	[ ]
R. J. Kitts, LP 6E-C	[ ]	[ ]
W. R. Lagergren, LP 3B-C	[ ]	[ ]
R. M. McMillan, LP 5A-C	[ ]	[ ]
E. L. Wisseman, BR 4E-C	[ ]	[ ]
D. F. Goetcheus, BR 5A-C	[ ]	[ ]
G. J. Pitts, BR 5A-C	[ ]	[ ]
J. A. Teague, BR 5A-C	[ ]	[ ]
K. Zimmerman, CST 7B-C	[ ]	[ ]
Nuclear Materials:		
L. Moerland, LP 3D-C	[ ]	[ ]
Independent Safety Engineering		
J. D. Robertson, SB 2B, SQN	[ ]	[ ]
D. W. Norwood, PSB-2, BFN	[ ]	[ ]
W. F. Skiba, NPB 1F, WBN	[ ]	[ ]
Other:		
R. H. Rogers, SP 4A-C	[ ]	[ ]
NSRB Support, LP 4A-C	[ ]	[ ]
G. A. Yelliott, LP 4K-C	[ ]	[ ]
J. P. Jackson, Hartsville District Center	[ ]	[ ]

cc: RIMS, MR 2F-C

PLNUCBJG/66

10/13/92

FI000310

103 of 103

TENNESSEE VALLEY AUTHORITY

DIVISION OF NUCLEAR ENGINEERING

SSD 1-F-90-99
Page 5

SEQUOYAH NUCLEAR PLANT

SET POINT AND SCALING DOCUMENT

FOR INSTRUMENT LOOP NO.

1-F-90-99

	REVISION R0	R1	R2	R3	R4	R5
	DATE 10-9-92	11-25-9[illegible]				
PREPARED	T. Thomas	T. Th[illegible]				
[illegible]IFIED	[illegible]	[illegible]				
REVIEWED	[illegible]	[illegible]			F10001 S2	
APPROVED NMP	[illegible]	[illegible]				
ISSUED	12/30/92	11/24/[illegible]		75		

TENNESSEE VALLEY AUTHORITY

DIVISION OF NUCLEAR ENGINEERING

SSD 2-F-90-106
Page 3

SEQUOYAH NUCLEAR PLANT

SET POINT AND SCALING DOCUMENT

FOR INSTRUMENT LOOP NO.

2-F-90-106

	REVISION. R0	R1	R2	R3	R4	R5
	DATE					
PREPARED	M.D. Eufy					
VERIFIED	L. [illegible]					
REVIEWED	Ronald Jackson				F100015	
APPROVED	[illegible]					

PER No SQPER920142
Revision 0
Page 1 of 3

No. _____

PROBLEM EVALUATION REPORT (PER)

PART A: INITIATOR

1A Component ID and Description: U1 and U2 PASF Post Accident Sampling Systems

2A Plant(s) Orgs. Affected: Chemistry
System(s): 43 and 31
Units Affected: U1 and U2

3A ASME Sec III ( )
ASME Sec XI ( )
Non-ASME (✓)

4A Building: Auxiliary
Elevation: 706
Room No.: U1 PASF and U2 PASF

5A Ref. Documents: NUREG 0737 and Reg. Guide 1.97, Rev. 2

6A Requirement Violated: Item #1: The combined time allotted for sampling and analysis should be three hours or less from the time a decision is made to take a sample.
Item #2: Equipment provided for backup (grab) sampling shall be capable of providing at least one sample per day for seven days following onset of accident and at least one sample per week until accident condition no longer exists.

7A Source of Requirement Violated: NUREG 0737

There people meet staff not Tech

8A Description of Condition: Item #1: Boron analysis/method cannot be performed in three hours or less even with the most proficient personnel. Approximately 25% of personnel are capable of meeting time restrictions of three hours or less excluding B analysis.
Item #2: Number of personnel capable of performing sampling of PASS and analyses of PASS samples satisfactorily is not sufficient to provide for the frequency required. Restrictions on dose levels allowed prohibit repeat performance of sampling under accident conditions.

9A Initiator: Gregory D. Taylor Organization: Chemistry Date: 4/14/92 Phone No.: X8697

SUPERVISOR

10A Confirmed Adverse Condition: Yes (✓) No ( ) If no, a justification must be attached.
Potentially Affects Operability: Yes ( ) No (✓)
Potentially Reportable: Yes ( ) No (✓) 4/23/92
Meets SCAR Criteria: Yes (✓) No ( ) If yes, SCAR No. _____
Assigned Responsible Organization: Chemistry Coordinated With: Bill Tocher Date: 4-16-92
Supervisor's Approval: R.E. Tocher Date: 4-16-92

10: S Smeller 4-16-92

CG 000003

A 40210 (Rev 3-91) [10-91] - PL020201765475

AA000110

PROBLEM EVALUATION REPORT (PER)

Continuation Sheet

PER No. 5PER920142

Revision 0

Page 3 of 3

PER CONTINUATION

Identify the information that is being continued on this sheet. (For example: Description or Condition.)
NOTE: Entries made on this sheet shall be signed and dated.

6A. Item 3: The post accident reactor coolant and containment atmosphere samples should be representative of the reactor coolant in the core area and containment atmosphere following an accident or transient.

8A. Item 3: Diluted PASS samples to not meet comparison criteria when compared with hot sample room results.

Gregory D. Taylor

Gregory D. Taylor

4/7/92

CG 000004

SIGNIFICANT CORRECTIVE ACTION REPORT

SCAR No. S Q S C A 9 2 0 0 0 4 Rev. No. 0

Continuation Sheet

6E CONTINUED NOTE: Entries made on this sheet shall be signed and dated.

Step No.

Response to Step 6E (QA Verification) submitted 2/24/93

The CAP for SQSCA920004 developed July 1, 1992, was intended to supersede proposed corrective action plan developed May 14, 1992. Proposed CAP (5/14/93) was interim (i.e., temporary) plan until study/root cause analysis (RCA) was generated. As a result of the RCA SQN Chemistry formulated a more comprehensive CAP.

Signature/Date [illegible] 3/5/93

Title Mgr. Chem.

584A (NP 1-92) [4-92]
01/996/11

AA000112

CG 000005

SIGNIFICANT CORRECTIVE ACTION REPORT

SCAR No. SQSCA920004 Rev. No. 0

5 – By Responsible Organization

(5A) Generic Review Required ☑ Yes ☐ No ☑ BFN ☐ SQN ☑ WBN ☑ BLN ☐ Corporate

Justification

(5B) Hardware Disposition ☐ Repair ☐ Accept-As-Is ☐ Rework ☐ Scrap ☑ N/A

(5C) Interim Actions ☑ Yes ☐ No See Cont sheet dated 5/14/92 by W. Socher

(5D) Root Cause Code ____ Root Cause Conclusion

See attached investigation Report

(5E) Extent of Condition [Consider other unit(s)] See attached investigation Report

(5F) Corrective Actions (SCII Completion Date 6-30-92)

SEE attached Corrective Action Plans and Night orders # 92-30

(5G) Recurrence Control Actions (SCII Completion Date ____)

Corrective Action Plan: Concurrence / Approvals

Concurrence	Name (Print or Type)	Initials	Date	Approvals	Name (Print or Type)	Initials	Date
(5H) Preparer	See C/A PLAN			(5M) QA	N/A		
(5I) Supervisor				(5N) ~~Dept. Mgr.~~			
(5J) MRC				(5O) Plant Mgr.	See C/A PLAN		
(5K) Action Org							
(5L) Action Org							

STEP 6 – Closure	Name (Print or Type)	Initials	Date
(6A) All Actions Complete	GREG TAYLOR	GT	2-3-93
(6B) Responsible Supv. / Mgr. Verification	W.F. SOCHER	WFS	2/5/93
(6C) ANI / ANII Verification	N/A		
(6D) Tags Removed	N/A		
(6E) QA Verification	JOHN M. STITT		3/24/93
(6F) SCAR Coordinator	MARK E. REYNOLDS	MER	3/22/93

CG 000006

VA 19584 (NP 1/92)

AA000113

SIGNIFICANT CORRECTIVE ACTION REPORT

SCAR No. SQSCA920004 Rev. 0

Continuation Sheet

QA verification 6E CONTINUED
Step No.

NOTE: Entries made on this sheet shall be signed and dated.

Closure of this SCAR is not acceptable at this time: SSP-3.4, section 3.9.1, requires the responsible organization to complete and document verification activities. This has not been accomplished.

A meeting was held on 2/23/93 with the following in attendance: Chem: B. Sucher, R. Richie, G. Tarcor, M. Gonzon
QA: M. Stitt, J. Mullenix

During this meeting the above requirement was discussed and understood by all. Additionally, the following items were determined to need specific attention in the closure documentation or possibility a revision to the corrective action of this SCAR

- Clarification that initial PASS training, including verification of the ability to sample and analyze within 3 hours, was completed for all techs.
- Documentation indicating that weekly exercise to maintain proficiency of the PASS system were conducted and a statement explaining how proficiency is now being maintained (since the weekly exercise is no longer conducted).
- Clear explanation of the staffing requirements (per shift and total qualified techs) needed to completely fulfill sampling and analysis requirements of NVOPG 0737. This should include the basis for staffing (i.e., projected dose/mission).

Verification of documentation that close this SCAR has been provided and is attached
M Stitt 3/22/93

M Stitt 2/24/93

Mark E Sieber 2/24/93

CG 000007

AA000114

584A (NP 1/92)

SIGNIFICANT CORRECTIVE ACTION REPORT

SCAR No. S O S C A 9 2 0 0 0 4 Rev. No. 0
Continuation Sheet

5F CONTINUED NOTE: Entries made on this sheet shall be signed and dated.
Step No.

AMENDMENT OF CAP FOR SCA920004:

INADEQUATE METHOD/EQUIPMENT FOR PASS ANALYSIS:

1. Dedicate one channel of the ion chromatograph for the analysis of PASS boron.
To be completed by 7/15/92-GDT/CEM.

Signature [illegible] 7/1/92
Title MGR-Chem

2. CLOSE ~~Cancel~~ action item for analysis by Standard Method of Additions. PASS matrix required by NRC for testing may interfere with this analysis.
7/2/92 ~~To be completed by 7/15/92~~-GDT/CEM.
COMPLETE

Signature [illegible]
Title MGR. Chem 7/1/92

INADEQUATE TRAINING/PRACTICE AND LOW MANAGEMENT PRIORITY

3. Incorporate in A1-14/TSQN a PASS Qual Card with clearly defined qualification criteria.
To be completed by 7/30/92-RDB/CEM.

Signature [illegible] 7/1/92
Title accreditation Support.

4. Establish required performance of 1/2-TI-CEM-043-066.1 within 30 days of each performance of 1/2-PI-CEM-043-487.
To be completed by 8/6/92-GDT/CEM.

Signature [illegible] 7/1/92
Title MGR. Chem

5. Close action item for PASS TNG to be provided with appropriate documentation of training performed. State 3 hr. requirement not met due to equipment. This is being addressed by action item 1.
7/2/92 ~~To be completed by 7/15/92~~-GDT.CEM.
COMPLETED 6/5/92

Signature [illegible] 7/1/92
Title MGR. Chem

INADEQUATE LONG-TERM DOSE ASSESSMENT

6. Site DNE to provide projected dose over time in a RIHS memo. This is to specify projected dose to be received during each day from day 1-7 for operators A and B.
To be completed by 11/10/92-CWB/DNE.

Signature Calvin W. Burrell for N. Durst July 1, 1992
Title Lead Mechanical Engineer-NE.

CG 000008

TVA 19584A (NP 1-92) [4-92]
PLD20201/996/3
7/1/92

AA000115

SIGNIFICANT CORRECTIVE ACTION REPORT

SCAR No. S Q S C A 9 2 0 0 0 4 - Rev. No. 0

Continuation Sheet

Step No. CONTINUED NOTE: Entries made on this sheet shall be signed and dated.

AMENDMENT OF CAP FOR SCA920004:

INADEQUATE VERIFICATION OF PASS SAMPLE:

7. Perform a study of dilutor valve performance to establish actual dilution factor. To be completed by 10/1/92-GDI/CEM.

Signature [illegible] 7/1/92

Title MGR. CHEM

8. Establish O-TI-CEM-260-020.9 to implement a QC program based on guidance provided by INPO good practice 91-019. ~~To be completed by 11/30/92-DJB/CEM.~~

RR 7-2-92

Signature [illegible] 7/1/92

Title MGR. CHEM

8. Based on the results of 7 above establish acceptance criteria for actual dilution factor results and method for monitoring by 10/30/92. CEM

Signature [illegible] 7/1/92 RS Kirkle 7-2-9

Title MGR CHEM

MRC: Signature [illegible] 7/2/92

Title

PLANT MANAGER Signature [illegible] 7/2/92

Title Plt Mgr

Signature N/A

Title

AA000116

CG 000009

TVA 19584A (HP 1-92) [4-92]
PL020201/996/4
7/1/92

Form SCR-1.1-2

SIGNIFICANT CORRECTIVE ACTION REPORT

SCAR No. SQSCA92 0004 Rev. 0

Continuation Sheet

Identify the information that is being continued on this sheet (for example: Description of Condition).

SC INTERIM CORRECTIVE ACTION

NOTE: Entries made on this sheet shall be signed and dated.

PROPOSED CORRECTIVE ACTION PLAN

1. Complete PASS training for all techs. Verify ability to sample and analyze under three hours.

2. Exercise via simulation the PASS system on a weekly basis to maintain proficiency.

3. Maintain capability from shift to shift of having three qualified people at all times with the first option to hold over from the previous shift or call out to a designated beeper responsibility.

4. Short term due to equipment inadequacy, modify the appropriate procedures to facilitate boron analyses titration by standard addition. Long term a more desirable alternative based on minimum detectable limits, reduced setup time is boron analysis by plasma spectrometry (a purchase request has been submitted for a plasma unit).

delete. see C/A Plan item 2 HS 7/2/92

1 thru 4 will be complete by 6/30/92 WJ

William T. Schroc 5/14/92

NIGHT ORDER 92-30D

ISSUED 5-14-92 for item # 3

B.47 Valve Alignment Changes: Addition of the new plug valv (identified as "RC-V-23") via this modification will requir changes to the procedures which govern the operation of th sampling panel. The changes include (1) identification o the valve, (2) specification of the valve alignment (a: closed) during all operations except undiluted off-ga: sampling, and (3) addition of the new sample procedure. Revision to these procedures will take place following the modification and will be made in accordance with approved plant procedures.

B.49 New Radioactive Effluent (Liquid or Gaseous) Release Pathways: No effluent release pathways are changed by this modification. The PASF HVAC will be in service to provide ventilation for airborne releases made within the PASF while sampling the undiluted coolant off-gas. UFSAR section 15.5.3 discusses the release path for Post-Accident Sampling, and this method is not being changed (i.e., See Safety Evaluation part B.3). During the sample transport from the PASF to the RCL, a release (if any) will be via ABGTS which will be in service with its normal release pathway out the shield building vent. Once within the RCL, any release will be via the exhaust loads out the service building vent. All of these release pathways are monitored vents.

B.25 Water Spray/Condensation: The modification adds tubing, a tee fitting and a valve interior to the panel and does not introduce new design parameters (i.e., temperature/pressure). The new stainless steel components are designed to be equivalent to the existing components (TVA Class G, seismic I(L)B) (Ref. A.2.b). The modification of changing Teflon tubing to Tefzell is more than adequate since calculation, reference 2.A.jj, shows Tefzell to be superior to Teflon in all categories (pressure, temperature and higher radiation dose). Also, the panel supplier, Sentry Equipment Corporation has recommended Tefzell as a suitable replacement for the Teflon (Ref A.2.mm). Therefore, the potential for or consequences of spray/condensation is not changed by this modification and is not a nuclear safety concern since no safety related equipment is located within the panel.

B.26 System Design Parameters: The additions to the system as proposed in this modification are designed to the same parameters as the system now in use. (Refs. A.2.d.1, A.2.b, and A.2.jj) Thus, design parameters are not a concern to nuclear safety.

B.27 Test & Retest Scoping Document (Post Modification Test): The only post modification test required is to assure that the added tubing, fittings, and valves are leak free at the operating pressure. since all joints are compression type, this modification would be subject to in-service leak testing per the Modification Criteria prior to routine service (Ref. A.2.j).

B.28 Chemistry Changes or Chemical Release Pathways: No chemical release pathways are changed. The existing sampling point for diluted gas sampling (e.g., the receptor for the 15 cc sample vial) shall be used for the undiluted gas sampling. Thus the same pathway is being used following the modification, and no new pathway is introduced. Changes to Chemistry procedures (e.g., TI-66.1) will be necessary after this modification, but the changes will be in method of sampling and analysis, not in plant chemical parameters or requirements. Thus, nuclear safety is not effected and is not a concern.

B.36 Reactor Coolant Pressure Boundary: A breech in the bypass line installed by this modification is isolable from the TVA Class A piping (Ref. A.2.l); thus, the line and modification do not qualify as RCS Pressure Boundary.

B.38 Pipe Vibration: Per the vibrational analysis of this modification (Ref. A.2.c.), pipe vibration will be of no concern to nuclear safety.

SIGNIFICANT CORRECTIVE ACTION REPORT

SCAR No. S O S C A 9 2 0 0 0 4 Rev. No. 0

Continuation Sheet

5F CONTINUED NOTE: Entries made on this sheet shall be signed and dated.

Step No.

TROI SCA 12

In reference to item 1 of corrective actions for SCA920004

1. Dedicate one channel of the ion chromatograph for the analysis of PASS boron. To be completed by 7/15/92-GOT/CEM.

   This item completed on 7/6/92.

Signature [illegible] 7-15-92

Title RLA /PASS specialist

AA000120

CG 000013

TVA 19584A (NP 1-92) [4-92]
PL020201/99676

SIGNIFICANT CORRECTIVE ACTION REPORT

SCAR No. 5Q5CA92004 Rev. 0

Continuation Sheet

Identify the information that is being continued on this sheet (for example: Description of Condition).

NOTE: Entries made on this sheet shall be signed and dated.

TROI seq 13

Step # 5F item #3 is completed. Copies of Cover sheet of TQSM vol. 4 and Qual. Card # CHM 020.02 are attached.

Richard A. Bayle
7/29/92

William T. Roche
7/29/92

~~Step # DJB~~ 10/29/92

AA000121

CG 000014

TVA 19584A (NP 3/91)

APPENDIX A
(Page 3 of 4)

TASK QUALIFICATION STANDARDS MANUAL

Rev. 0
Page 1 of ___

TASK QUALIFICATION STANDARD

COVERSHEET

Chemistry RLA
TRAINING PROGRAM

DUTY AREA | REFERENCE NO.

SQN Chemistry Training Qualification Standard Manual
QUALIFICATION STANDARD TITLE (if appropriate) | REFERENCE NO.

	SIGNATURE	DATE
PREPARED BY R. D. Bayles	Richard D. Bayles	7/25/92
SITE TRAINING GROUP MANAGER S R Taylor	S R Taylor	7/29/92
SITE GROUP MANAGER Bill Jocher	Bill Jocher	7/29/92
(STANDARDIZED QUALIFICATION STANDARDS USE ONLY)		
CORPORATE TRAINING MANAGER		
CORPORATE PROGRAM MANAGER		
SITE CONCURRENCE:		
BFN		
BLN		
SQN		
WBN		

TVA 40239 (NP 4/92) Page 1 of 2

TASK QUALIFICATION CARD FORM

TASK QUALIFICATION CARDS MANUAL VOLUME _____

PROGRAM Chemistry RLA

QUAL CARD TITLE Post Accident Sampling System (PASS) Team

	Description of Change [(For pen and ink changes attach copy of affected page(s)]		Page(s) Affected and Revision Level
)PEN and INK CHANGE( )ADD)FORMAL REVISION ( )DELETE x)INITIAL ISSUANCE ( )CHANGE	Site Manager Bill Fischer Training Manager S.K. Poyer	Initial issue. Transmitt to all Nuclear Training sites.	Rev. 0
)PEN and INK CHANGE( )ADD)FORMAL REVISION ( )DELETE)INITIAL ISSUANCE ( )CHANGE	Site Manager Training Manager		
)PEN and INK CHANGE( )ADD)FORMAL REVISION ( )DELETE)INITIAL ISSUANCE ( )CHANGE	Site Manager Training Manager		
)PEN and INK CHANGE( )ADD)FORMAL REVISION ( )DELETE)INITIAL ISSUANCE ( )CHANGE	Site Manager Training Manager		
)PEN and INK CHANGE( )ADD ( )FORMAL REVISION ( )DELETE ( )INITIAL ISSUANCE ( )CHANGE	Site Manager Training Manager		
( )PEN and INK CHANGE( )ADD ( )FORMAL REVISION ( )DELETE ( )INITIAL ISSUANCE ( )CHANGE	Site Manager Training Manager		
( )PEN and INK CHANGE( )ADD ( )FORMAL REVISION ( )DELETE ( )INITIAL ISSUANCE ( )CHANGE	Site Manager Training Manager		
( )PEN and INK CHANGE( )ADD ( )FORMAL REVISION ( )DELETE ( )INITIAL ISSUANCE ( )CHANGE	Site Manager Training Manager		
( )PEN and INK CHANGE( )ADD ( )FORMAL REVISION ( )DELETE ( )INITIAL ISSUANCE ( )CHANGE	Site Manager Training Manager		
( )PEN and INK CHANGE( )ADD ( )FORMAL REVISION ( )DELETE ( )INITIAL ISSUANCE ( )CHANGE	Site Manager Training Manager		

RLA
OJT QUALIFICATION CARD
POST ACCIDENT SAMPLING SYSTEM (PASS) TEAM

Team Members' Payroll Name	Plant/Date	Social Security Number

1.2.2 SQN

1.2.2.1 H032 (609049)
1.2.2.2 H033 (609050)
1.2.2.3 H039 (609056)
1.2.2.4 H042 (609063)
1.2.2.5 H047 (609064)

1.2.3 WBN

1.2.3.1 G049 (609049)
1.2.3.2 G050 (609050)
1.2.3.3 D172 (609056)
1.2.3.4 A174 (609059)
1.2.3.5 A119 (609063)
1.2.3.6 A120 (609064)

2.0 Performance Standard

Demonstrating required safety measures and practices, the team, within the three hour timeframe, shall procure and analyze samples from the PASS for accident conditions per referenced site procedures.

3.0 General References*

3.1 BFN

SIGNIFICANT CORRECTIVE ACTION REPORT

SCAR No. S Q S C A 9 2 0 0 0 4 Rev. No. 0

Continuation Sheet

iF _____ CONTINUED NOTE: Entries made on this sheet shall be signed and dated.
Step No.

TRX Seq 14

reference to item 4 of Corrective Action Plan SQSCA920004

Establish required performance of 1/2-TI-CEM-043-066.1 within 30 days of each performance of 1/2-PI-CEM-043-487. This item completed 7/17/92 by including in comments section of 1/2-PI-CEM-043-487 cover sheets that 1/2-TI-CEM-043-066.1 is to be performed within 30 days and to ensure that WCG has scheduled performance in WCG database.

Completed 7/17/92, CDT/CEM.

Signature/Date [signature] 7-17-92

Title RLA / PTIDS Specialist

TO: MIKE GOODSON, CHEMISTRY LAB SUPERVISOR SQN
FROM: RICHARD D. BAYLES CHEMISTRY INSTRUCTOR SQN
DATE: 3/3/93

SUBJECT: PASS QUALIFICATIONS

THE FOLLOWING HAVE COMPLETED PASS TRAINING ON THE DATE INDICATED.

ADCOCK DICKIE L. 4/22/92
CLINE BOBBY K. 5/7/92
CURVIN DOROTHY B. 4/16/92
DAVIDSON JACK K. 5/7/92
DEMOTT DAVID B. 3/3/93
FERRY LINDA S. 2/15/93
FINCHER MIKE L. 5/7/92
GOODSON MIKE C. 5/27/92
HARDEMAN DELORES D. 3/3/93
HARRIS HAROLD L. 4/16/92
MANN HAROLD R. 2/15/93
MARSTON STEWART D. (INITIAL 7/3/92) 2/24/93
NIDA DIEDRE B. 2/21/92
NUNLEY RICHARD D. 2/15/93
PAGE BARBARA A. 4/22/92
PAPPU THIMOTHY P. 4/9/92
PARKER JEFF A. 2/24/93
PIERCE JERRY D. (INITIAL 7/3/92) 2/24/93
SEAY RONALD 3/3/93
TAYLOR DON W. JR. 1/27/92
TAYLOR GREG D. 4/16/92
THOMPSON DAVID M. 1/31/92
THURMAN RODNEY S. 4/9/92
WADDLE CARROL M. 2/24/93
WILHOITE CHARLES R JR. 1/27/92
WRIGHT WAYNE A. 5/28/92

DADE MASSEY HAS NOT COMLETED INITIAL TRAINING.

SQSCA920004
TROI sed 05

TO: MIKE GOODSON, SQN LAB SUPERVISOR
FROM: RICHARD D. BAYLES, CHEMISTRY INSTRUCTOR STC-SQN
DATE: 6-05-92
SUBJECT: POST ACCIDENT SAMPLING QUALIFICATIONS

THE FOLLOWING PERSONNEL HAVE SUCCESSFULLY COMPLETED POST ACCIDENT SAMPLING (PASS) TRAINING CHM005.502. THIS COURSE IS A RETRAINING COURSE WITH 1 DAY OF CLASS ROOM AND SIMULATOR AND 1 DAY OF IN PLANT TRAINING ON THE SENTRY POST ACCIDENT SAMPLING SYSTEM. DUE TO PLANT CONDITIONS PORTIONS OF THE IN-PLANT TRAINING HAD TO BE SIMULATED.

1. CLINE, BOBBY K. 5-7-92 SIMULATED IN-PLANT
2. FINCHER, MICHAEL 5-7-92 SIMULATED IN-PLANT
3. DAVIDSON, JACK K. 5-7-92 SIMULATED IN-PLANT
4. BLAND-THEIM, ANGELA 4-30-92 SIMULATED IN-PLANT
5. PARKER, JEFERY A. 4-30-92 SIMULATED IN-PLANT
6. LEWIS, WILLIAM RAY 4-30-92 SIMULATED IN-PLANT
7. WADDLE, CARROL M. 4-30-92 SIMULATED IN-PLANT
8. ADOCK, DICKIE L. 4-22-92 SIMULATED IN-PLANT
9. WILHOITE, CHARLES R. 4-22-92 SIMULATED IN-PLANT
10. PAGE, BARBARA A. 4-22-92 SIMULATED IN-PLANT
11. CURVIN, DORTHY B. 4-16-92 SIMULATED IN-PLANT
12. THOMPSON, DAVID M. 4-16-92 SIMULATED IN-PLANT
13. MANN, HAROLD R. 4-16-92 SIMULATED IN-PLANT
14. HARRIS, HAROLD L. 4-16-92 SIMULATED IN-PLANT
15. THURMAN, RODNEY S. 4-9-92 OBTAINED SAMPLES
16. FERRY, LINDA S. 4-9-92 OBTAINED SAMPLES
17. NUNLEY, RICHARD D. 4-9-92 OBTAINED SAMPLES
18. PAPPU, THIMOTHY P. 4-9-92 OBTAINED SAMPLES
19. DEMOTT, DAVID B. 5-27-92 SIMULATED STC
20. GOODSON, MICHAEL C. 5-27-92 SIMULATED STC
21. HARDEMAN, DELORES D. 5-28-92 SIMULATED IN-PLANT
22. NIDA, DIEDRE B. 5-28-92 SIMULATED IN-PLANT
23. SEAY, RONALD 5-28-92 SIMULATED IN-PLANT
24. TAYLOR, DONALD W. 5-28-92 SIMULATED IN-PLANT
25. WRIGHT, WAYNE A. 5-28-92 SIMULATED IN-PLANT
26. TAYLOR, GREGORY D. OBTAINED SAMPLES 4-9-92

THE FOLLOWING HAVE NOT RECIEVED INITIAL TRAINING:(SCHEDULED FOR 6-29-92, 6-30-92,& 7-2-92)
1. MARSTON, STEWART D.
2. PIERCE, JERRY D.(RETRAINING 5-28-92 SIMULATED INPLANT)

NIGHT ORDER # 92-30 D

SQSCA9200..

Date Issued: 5/14/92 Date Cancelled:

D. Adcock		H. Harris		D. Taylor	
A. Bland-Thiem		R. Lewis		G. Taylor	
B. Cline		H. Mann		M. Thompson	
D. Curvin		D. Nida		S. Thurman	
J. Davidson		R. Nunley		C. Waddle	
D. Demott		B. Page		C. Wilhoite	
L. Ferry		T. Pappu		W. Wright	
M. Fincher		J. Parker		S. Marston	
M. Goodson	MCC	J. Pierce		Watts Bar	
D. Hardeman		R. Seay		Watts Bar	

Post Accident Sampling - SCAR #SQSCA920004

Below is the corrective action to SCAR #SQSCA920004 associated with providing coverage in the event of an accident.

Maintain capability from shift to shift of having three qualified people at all times with the first option to hold over from the previous shift or call out to a designated beeper responsibility.

This coverage includes the CSS on duty. Danny Bayles is in the process of training personnel on the PASS unit and will provide a list of qualified personnel at the end of the training period. In the event an individual does not pass, their qualifications as an RLA will be evaluated. Shift coverage for a non-qualified individual will be accomplished by retaining the Analyst on the previous shift who has the lowest amount of overtime.

Initiated by: M. Goodson

Chemistry Control Supervisor:

AA000128

CG 000021

SIGNIFICANT CORRECTIVE ACTION REPORT

SCAR No. S Q S C A 9 2 0 0 0 4 Rev. No. 0

Continuation Sheet

5F #4-#3 CONTINUED NOTE: Entries made on this sheet shall be signed and dated.

Step No.

Chemistry requests closing of CA #4 of SQSCA920004, Rev. 0. Corrective Action #3 will ensure qualification and proficiency is maintained.

Signature/Date [illegible] / 3/10/93

Title Tech Supp Mgr.

V. 584A (HP 1-92) [4-92]
201/996/12

AA000129

CG 000022

S52 930309 187

March 10, 1993

R. J. Beecken, POB 2B SQN

Due to Operations' desire to minimize risk to the plant, PASS will not be operated except in Mode 5 until DCN #0608 and #0746 are complete. These DCNs will provide the ability to obtain PASS samples without entry into LCO 3.6.1.1.

C. E. Kent
Chemistry & Radcon Manager
POB 2C-SQN

DJB:BT
cc: RIMS, MR 2F-C

Concurrence:
Operations Manager

PL020201/3578/2

SIGNIFICANT CORRECTIVE ACTION REPORT

SCAR No. S Q S C A 9 2 0 0 0 4 Rev. No. 0

Continuation Sheet

5F #6 CONTINUED NOTE: Entries made on this sheet shall be signed and dated.

Step No.

Based on the attached SA/SE for DCN M06299, the current level of RLA staffing is adequate to fulfill NUREG 0737 requirements.

Signature/Date [illegible] 3/10/93

Title [illegible] Mgr.

SIGNIFICANT CORRECTIVE ACTION REPORT

SCAR No. SQSCA920004 Rev. 0

Continuation Sheet

5F 06 CONTINUED

Step No.

NOTE: Entries made on this sheet shall be signed and dated.

SQP 920004 SCA Sequence 15 be may closed based on Revision 4 of the SA/SE for DCN M06299. Prior to Revision 4, Section B.55, PASF MANPOWER of the SA stated 35 RCL analyst and 14 RADCON personnel were required to operate the PASF for the 30 day period following a design basis LOCA. This man power was based on the Gilbert/Commonwelth contractors incorrectly interpretation NE calculation TIRPS-146, POST ACCIDENT DESIGN BASIS SAMPLING MISSION DOSE. This calculation only calculated the design basis mission which is the first or worst case mission following the accident. The above personnel requirements were based on dose rate calculated 1 hour after the LOCA as required by NUREG 0737, Some of the mission team members received 4.95 rem in the design basis mission, while the NRC dose rate limits provided in GDC 19 is 5.0 rem over a 30 day duration following the LOCA. Revision 4 corrected this interpretation error by deleting the above personnel requirements and indicated the gamma radiation shine from containment decreased approximately by a factor of ten after 24 hours and decreased substantially more over a 30 day period. A copy of FSAR Figure 15.5.3-7 was is also attached to further support this position.

Calvin W. Burrell 3/9/93

Calvin W. Burrell JR./Date
NE-MN Nuclear Engineer

Johney Barker 3/9/93

Johney Barker/Date
Nuclear Chemistry

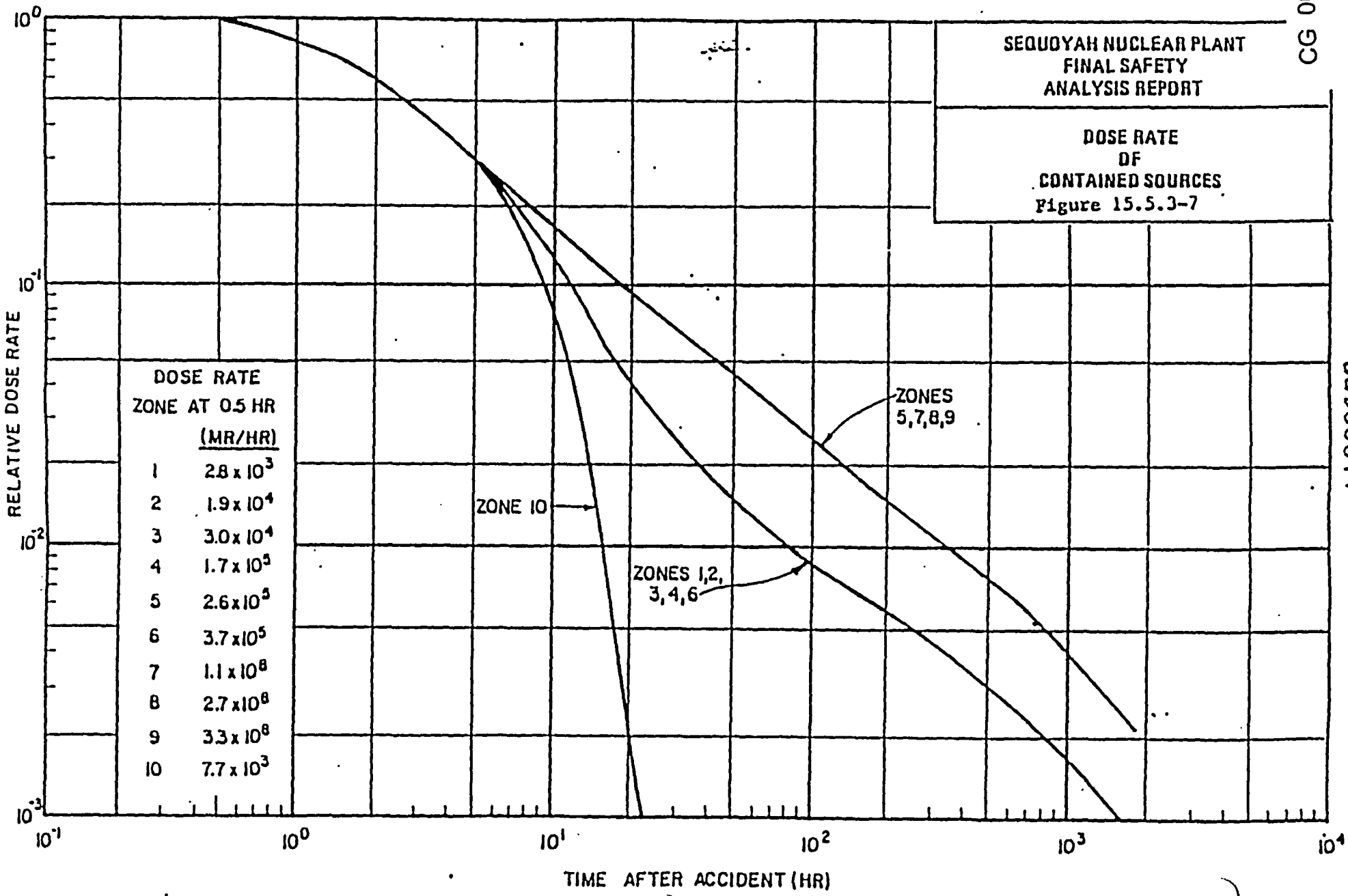

CG 000026

AA0001333

PROBLEM EVALUATION REPORT (PER)

CONTINUATION SHEET

PER No. SQSCA920004

Revision 0

Page 1 of 1

PER CONTINUATION

Identify the information that is being continued on this sheet (For example: Description of Condition)
Note: Entries made on this sheet shall be signed and dated.

Sequence (15) of SQSCA920004 was resolved with the issuance of the SA/SE of DCN-M6299B Revision 4 (B38 911208 801). See section B-55 of the safety assessment.

Calvin W. Burrell Jr. (NE) 9/30/9

Johnny Barker (chem) 9/30/

APPENDIX D
(Page 1 of 1)

DCN# M06299 B
Page 8 of

ENGINEERING SAFETY ASSESSMENT/EVALUATION COVER SHEET

B38 911208 801

☐ Safety Assessment Only ☒ Safety Assessment and Safety Evaluation

Safety Assessment/Evaluation No. M6299B	Revision No. ~~4~~ 5	RIMS Accession No.
If Not Rev. 0, Previous Revision's RIMS No. B38911129813		

Project and affected unit(s) SQN Unit 1 Post Accident Sampling

	Activity	Number (Include Revision No.)
X	Design Change	PMP or DCN No. DCN M-06299B
	Temporary Alteration	TACF No.
	Special Test/Experiment	Special Test No.
	Temporary Shielding Request	TSRF No.
	Procedure Change	Procedure No.
	New Procedure	Procedure No.
	Other (Identify)	

Special Requirements? Yes X No

Comments: SPECIAL REQUIREMENTS: See SA section A.3 and DCN M-06299-B Modification Criteria.

Revision 4 +5 incorporates DCN M-06299-B, final issue.

Distribution (Safety Evaluation Only)
--: RIMS, ET SLE-K
PORC Secretary, DST 10A, SQN
NSRB Chairman, BR 1N 77B-C
Site Licensing, OPS 4C, SQN
Site Report Unit, SBT 4A, SQN
Preparer - Return original to originating document

TVA

REVISION LOG

Title: Safety Assessment/Safety Evaluation for DCN M-06295-~~A~~ B Page 2

Revision No.	DCN M-07036-A Page 7 — DESCRIPTION OF REVISION	DCN M-06295B Page 9 of ___	DCN F07431A Page 7a	Date Approved
0	Initial Issue			09MAY91
1	As part of ~~F DCN~~ DCN F-07036-A, SA/SE for DCN M-06295-A revised to remove administrative special requirement and correct minor T/S reference error. Pages changed: added ~~8a~~ revision log; revised 5; 9; 13; 18; 25.			Sept 10 1991
2	Incorporate FDCN F07431A – Sampler Transport From PAS to RCL & Analysis. Pages Revised: Cover, Rev log, 5, 6, 8-13, 18, 20-25. Pages Deleted: none. Pages Added: ~~27A~~ 24a, 14a, 14b			10-29-91
3	Revised to delineate the use of Teflnel tubing being used to replace Teflon in lieu of stainless steel for line CP-L-12. Pages changed ~~11, 6, 11, 24~~ 1, 7, 8, 13, 27 and 30. Renumbered all pages.			11-29-91
4	Revised to add references to calculations issued to support the use of Teflnell tubing. Renumbered all pages: Revised pages 1, 10, 12 thru 17, 20, 21, 24, 28, Added page 32.			12-7-91
5	Revised special requirement i.			12-8-91

AA000136

CG 000029

TVA 10224 (EN DES-4-78)

APPENDIX B

SAFETY ASSESSMENT FORMAT

Page 3 of

Document No. (i.e., ECN No., procedure No. and revision, special test No., etc.): DCN M-06299 R

A. Description

1. Detailed description of the change, special activity, or condition including the systems, structures, and components affected. Include the number of the activity proposed (e.g., ECN/DCN No., procedure No.).
   SEE ATTACHED
2. References.
   SEE ATTACHED

B. Impact on Safety

"Is the change acceptable from a nuclear safety standpoint?"

Yes ✓ No _____

Justification: Checklist B-1 (or IQR procedure change process/engineering criteria STD-2.3).

If the answer is "No", it is an unsafe change which will require either revision to make it safe or cancellation. Environmental impacts are evaluated in accordance with STD-13.3.

C. Potential Technical Specification (T/S) Impact

Yes: _____ No ✓ Is a change to the T/S required for conducting or implementing the change, test, or experiment?

Justification: SEE ATTACHED

If the answer is "Yes", a T/S change is required prior to implementation or the activity needs to be revised or cancelled, proceed to Part E. If the answer to the question is "No", proceed to Part D.

CG 000030

APPENDIX B (Continued)

Document No. DCN M-06299 B Page 4 of ___

	DOES NOT DECREASE NUCLEAR SAFETY	POTENTIALLY REDUCES NUCLEAR SAFETY	N/A	
1.	___	___	✓	Fire Protection (Appendix R)
2.	___	___	✓	Internal Flooding Protection (MELB)
3.	___	✓	___	Pipe Breaks
4.	___	___	✓	Pipe Whip
5.	___	___	✓	Modification to Non-Seismic Areas in CB/AB
6.	___	✓	___	ALARA
7.	___	___	✓	Jet Impingement Effects
8.	___	✓	___	Seismic/Dead Weight
9.	___	___	✓	Internal/External Missiles
10.	___	___	✓	Heavy Load Lifts or Safe Load Paths (NUREG-0612)
11.	___	✓	___	Toxic Gases
12.	___	___	✓	Hazardous Material
13.	___	___	✓	Human Factors
14.	___	___	✓	Electrical Separation/Isolation
15.	✓	___	___	Primary Containment Integrity/Isolation
16.	___	___	✓	Secondary Containment Integrity/ Isolation
17.	___	✓	___	Equipment Reliability
18.	___	✓	___	Materials Compatibility
19.	___	___	✓	Single Failure Criteria
20.	___	✓	___	Control Room Habitability

APPENDIX B (Continued)

Document No. DCN M-06299 B Page 5 of ___

	DOES NOT DECREASE NUCLEAR SAFETY	POTENTIALLY REDUCES NUCLEAR SAFETY	N/A	
21.	___	✓	___	Environmental Qualification Category
22.	___	___	✓	Equipment Failure Modes
23.	___	___	✓	Tornado or External Flood Protection
24.	___	___	✓	Protective Coatings Inside Containment
25.	___	✓	___	Water Spray/Condensation
26.	___	✓	___	System Design Parameters
27.	___	✓	___	Test and Retest Scoping Document (Post Modification Test)
28.	___	✓	___	Chemistry Changes or Chemical Release Pathways
29.	___	___	✓	Equipment Redundancy
30.	___	___	✓	Equipment Diversity
31.	___	___	✓	Physical Separation
32.	___	___	✓	Electrical Loads
33.	___	___	✓	Response Time of Emergency Safeguards Equipment
34.	___	___	✓	Safety Injection/Core Cooling Capability
35.	___	___	✓	Decay Heat Removal Capability
36.	___	✓	___	Reactor Coolant Pressure Boundary
37.	___	___	✓	Reactor Core Parameters
38.	___	✓	___	Pipe Vibration
39.	___	___	✓	Security System
40.	___	___	✓	Scaffolding

APPENDIX B (Continued)

Document No. DCN M-062998 Page 6 of ___

	DOES NOT DECREASE NUCLEAR SAFETY	POTENTIALLY REDUCES NUCLEAR SAFETY	N/A	
41.	___	___	✓	Electrical Breaker Alignment Changes
42.	___	___	✓	I-TABS, Protection Relay Settings
43.	___	___	✓	Compensatory Measure
44.	___	___	✓	Environmental Impact Statement (See STD-13.3.)
45.	___	___	✓	Design Basis Document
46.	___	___	✓	Radwaste System Changes
47.	___	✓	___	Valve Alignment Changes
48.	___	___	✓	Shield Building Integrity (SQN/WBN)
49.	___	✓	___	New Radioactive Effluent (Liquid or Gaseous) Release Pathways
50.	___	___	✓	Temporary Shielding
51.	___	___	✓	Instrument Setpoints
52.	___	___	✓	ASME Section XI

D. Potential Safety Analysis Impact

Yes ___ No ✓ Is a SE obviously required (for example, change to a Radwaste System, special test, or experiment)? If yes, the remainder of Part D may be bypassed.

Does the proposed activity affect significantly (directly or indirectly) any information presented in the SAR or deviate from the description given in the SAR:

Yes ___ No ✓ N/A ___ By changing the system design or functional requirements?

Yes ✓ No ___ N/A ___ By changing the text, (tables,) graphs, or figures?

DCN M-06299B
Page 14

APPENDIX B (Continued)

Document No. DCN M-06299-B Page 7 of ___

Justification: See ATTACHED

Does the proposed change involve new procedures or instructions or revisions thereof that:

Yes ____ No ✓ N/A ____ Differ with or affect system operation characteristics from that described in the SAR?

Yes ____ No ✓ N/A ____ Differ with or affect compliance with Technical Specifications?

Yes ____ No ✓ N/A ____ Conflict with or affect a process or procedure outlined, summarized, or described in the SAR?

Justification: See Attached

If the questions are answered "No", the activity may be implemented without further evaluation. If the questions are answered "Yes", a 10 CFR 50.59 SE is required.

E. Review and Approvals

Preparer (Level 1) Dale Barse / Dale Barse Date: 12-8-91
R5 Name Signature

Reviewer (Level I-IOR or Level II) James G. Rogers / James Rogers Date: 12-8-91
R5 Name Signature

Approver (Line Mgr.) NAVIN SHAH / M.E. CEDLACIKI / N Shah FOR MES Date: 12/8/91
Name Signature VIA TELECON.

Other Reviewers (as appropriate) ____ / ____ Date: ____
Name/Organization Signature

7880C

APPENDIX C

SAFETY EVALUATION FORMAT

DCN M-06295B
Page 15 of

Safety Evaluation No.: DCN M-06295B Page 8 of

Document No. (that is, ECN No., procedure No. and revision, special test No., etc.): DCN M-06295B

A. Accidents Evaluated as the Design Basis

A.1. Design Basis Accidents and Anticipated Operational Transients
SEE ATTACHED

A.2. Credible failure modes of proposed activity
SEE ATTACHED

B. Evaluation of Effects

B.1. May the proposed activity increase the probability of an accident previously evaluated in the SAR?

Yes _____ No ✓

Justification: SEE ATTACHED

B.2. May the proposed activity increase the probability of occurrence of a malfunction of equipment important to safety previously evaluated in the SAR?

Yes _____ No ✓

Justification: SEE ATTACHED

B.3. May the proposed activity increase the consequences of an accident previously evaluated in the SAR?

Yes _____ No ✓

Justification: SEE ATTACHED

B.4. May the proposed activity increase the consequences of a malfunction of equipment important to safety previously evaluated in the SAR?

Yes _____ No ✓

Justification: SEE ATTACHED

B.5. May the proposed activity create a possibility for an accident of a different type than any evaluated previously in the SAR?

DCN M-06299B
Page 16

APPENDIX C (Continued)

SAFETY EVALUATION FORMAT

Safety Evaluation No.: DCN M-06299B Page 9 of ___

Yes _____ No ✓

Justification: See Attached

B.6. May the proposed activity create a possibility for a malfunction of a different type than any evaluated previously in the SAR?

Yes _____ No ✓

Justification: See Attached

B.7. May the proposed activity reduce the margin of safety as defined in the basis for any Technical Specification?

Yes _____ No ✓

Justification: See Attached

C. Unreviewed Safety Question Determination Conclusion

Based on the results of Part B, the change:

✓ Does not involve an unreviewed safety question.

_____ Involves an unreviewed safety question and must be revised, cancelled, or reviewed by the NRC prior to implementation.

D. Reviews and Approvals

Preparer (Level I) RS — Dale Barse (Name) / [signature] (Signature) — Date: 12-8-91

Approver (Line Mgr.) RS — NAVIN SHAH / M.R. SEDLACEK (Name) / N Shah FOR MRS VIA TELECON (Signature) — Date: 12/8/91

Reviewer (Level II) RS — James G. Rogers (Name) / [signature] (Signature) — Date: 12-8-91

Reviewer (a,b) (PORC/QR) — _____ (Name) / _____ (Signature) — Date: _____

Other Reviewer(s) (As appropriate) — _____ (Name) / _____ (Signature) — Date: _____

[a] This review is not required for corporate level procedures.

[b] As required by Technical Specification.

SAFETY ASSESSMENT
DCN M-06299B

A. DESCRIPTION

1. Design Change Request (DCR) No. 3250 (Ref. A.2.a) addresses various modifications to the Sequoyah Unit 1 Post Accident Sampling System (PASS). DCN M06299B (Ref. A.2.j) implements one of these modifications to install 1/8" OD stainless steel tubing, Tefzel tubing, and a plug type isolation valve with all necessary fittings and supports to directly connect PASS lines CP-L-11 and CP-L-12, bypassing the 4-way valve RC-DV-2.(See the attached Figure 1.) Note that an existing penetration in the PASS panel will be used for the handle extension for the plug valve. R3

As presently configured in the U1 PASS, the line CP-L-12 is 1/8" OD Teflon tubing. Line CP-L-11 is 1/4" OD stainless steel tubing. Line CP-L-12 would see only diluted RCS off-gas samples; however, after the modification stipulated by this DCN (M06299B), CP-L-12 would see both diluted and undiluted samples. For this reason, this modification will also replace CP-L-12's Teflon tubing to Tefzel tubing, which is capable of withstanding a much higher integrated radiation dose. R3 R4

This modification will allow the PASS panel operator to directly obtain a sample of RCS off-gas which has not been diluted. This is necessary so that backup, grab sample capability for dissolved hydrogen concentration analysis is available as required by NUREG 0737 (Ref.A.2.m) and Reg Guide 1.97 (Ref.A.2.n). Prior to the modification, the off-gas sample was taken through valve RC-DV-2 which diluted the sample by a factor of approximately 1:15,000 (Ref.A.2.k). The hydrogen gas concentration in the sample would be diluted to the point of undetectability by existing radiochemistry laboratory methods (i.e., gas chromatography). With this modification, the off-gas sample receives essentially no dilution (Ref A.2.e), and thus the hydrogen concentration remains at levels which are detectable (Ref.A.2.p). R4

This modification allows the acquisition of an undiluted sample during accident and transportation to the radiochemistry laboratory. The scope of this Safety Assessment/Evaluation is (1) the modification itself, (2) the drawing of the sample and placement of the sample into the transport cart/cask and (3) the transport of the sample. R2

Systems Affected: Sampling System (System 43)
PASF HVAC (System 30)

Components Affected: Post Accident Sample System Liquid Sample Panel (PASS LSP)

Affected Structures: None

Implementing the proposed activities will require revisions to and deletion of existing plant procedures, and/or the issuance of new plant procedures of the following types to maintain and operate the equipment during normal plant conditions:

Maintenance Instructions (MIs)
Instrument Maintenance Instructions (IMIs)
Surveillance Instructions (SIs)
System Operating Instructions (SOIs)
General Operating Instructions (GOIs)
Special Maintenance Instructions (SMIs)
Periodic Instructions (PIs)
Technical Instructions (TIs)

These procedures shall integrate the requirements contained within this design change package. Revision to these procedures for reasons other than the implementation of this modification are not within the scope of this Safety Assessment/Evaluation.

2, References:

a. Sequoyah Design Change Request (DCR); No. 3250.
b. Design Input Record (DIR) #1-DI-574-01, Gilbert/Commonwealth, Inc., rev. 0.
c. Vibration Checklist, RIMS# B39 91 0422 002.
d. General Design Criteria
   1) GDC SQN-DC-V-9.3, rev. 3
   2) GDC SQN-DC-V-3.0, rev. 6
e. "Reactor Coolant Off-Gas Sample Dose Evaluation" SQN-SQS2-0120, rev. 1. |R4
f. UFSAR Sections:
   1) 1.2.2.11 - Sampling & Water Quality System
   2) 7.5 - Safety-Related Display Instrumentation
   3) 9.3.2 - Process Sampling System
   4) 9.4.10 - Postaccident Sampling Ventilation System
   5) 9.5.10 - Post Accident Sampling Facility
   6) 15.5.3 - Environmental Consequences of a Postulated Loss of Coolant Accident
g. Technical Specification Sections:
   1) 1.0 - Definitions
   2) 3.3.3.7 - Post Accident Monitoring
   2) 6.8.5.e - Postaccident Sampling
   3) Licensing Condition 2.F-Post Accident Sampling
h. Project Planning Document (PPD) No. 0608; February 7, 1991.
i. TI-66.2: "Sentry Post-Accident Sampling Equipment Training and Test Results Comparison", rev. 7.
j. DCN M06299B |R4
k. TI-66.1: "Post-Accident Sampling and Analysis Methods for the Sentry Post-Accident Sampling System:, rev. 12.
l. TVA Drawings, 47W625 series
m. NUREG 0737, "Clarification of TMI Action Plans:
n. Reg Guide 1.97, "Instrumentation for Light-Water-Cooled Nuclear Power Plants to Access Plant and Environs Conditions During and Following and Accident".
o. "Safety Evaluation by the Office of Nuclear Reactor Regulation Related to Amendment No. 35 to Facility Operating License DPR-77 and Amendment No. 26 to Facility Operating License DPR-79 Tennessee Valley Authority"; TVA RIMS# A02 840426004.
p. Sensitivity Assessment in DCN M06299B.
q. SQEP 26 att. 12 checklists in DCN M06299B.
r. ALARA Review in DCN M06299B and Mechanical Nuclear Instruction MNI 25.5.1. |R4
s. Bill of Materials in DCN M06299B.

t. "High Radiation Sampling System - Operating and Maintenance Manual"; Sentry Equipment Company, TVA Contract# 80X62-827371.
u. Calculation for total PAS mission dose, TI-RPS-146, rev. 0.
v. SQN T/S Change Request# 89-30, PAM Instrumentation, TVA RIMS# L44 910412 801.
w. TVA Letter to NRC on Reg Guide 1.97 deviations, TVA RIMS# L44 900507 804.
x. CRFSAR (copy attached)
y. Calculation "Seismic Qualification of Liquid Sample Panel 1 & 2-L-567"; SCG-4M-00676, rev. 4.
z. CAQR#SQP 90 0191 (Generic review located mission dose problems.)
aa. Memo: Vondra to Trudel, TVARIMS# S52 90 0907 860.
bb. Design Input Memorandum (DIM), SQN-DC-V-9.3-10.
cc. SSP 27.3, "Safety Assessment/Evaluation of Changes Tests and Experiments (CFR 50.59)" Revision 3.
dd. Calculation TI-RPS-146, Revision 4, "Post Accident Design Basis Sampling Mission Dose:. R4
ee. SQA-66, "Housekeeping", Revision 18.
ff. RCS Off Gas CART, Drawing No. 464, Atlan-Tech, Inc., Purchase Requisition No. 194713. R2
gg. NSAC-125, Section 3.6.
hh. Si-160, Revision, 4, Primary Containment Local Leakrate Summary.
ii. Calculation SQN-APS3-067, Revision 1.
jj. Calculation - Tubing Material Qualification of off gas sampling line, SQN-43-D053, EPM-MDE-120491, revision 0.
kk. Calculation - Integrated Dose for off gas sample tubing, SQN-43-D053, EPM-CSS-120291, revision 0.
ll. Calculation - Integrated Accident Dose inside of Primary Containment and the Annulus, TIRPS48, revision 5. R4
mm. Memo - Sentry Corporation (William Wagner) to TVA (SWEC) Bob Weth, dated 12-02-91, (B27911202003)

3. Special Requirements:

a. This SR deleted in Revision 2. R2

b. Calculation "Reactor Coolant Off-Gas Sample Dose Evaluation: (Ref A.2.e) contains an Unverified Assumption (UVA). This UVA says "The 30 second handling time specified by Chemistry includes time for drawing the sample and placing it in the sample carrier. This duration must be verified after the modification is performed." This must be done prior to lifting the hold order on valve RC-V-23. The UVA must be resolved while the hold order is on valve RC-V-23 by utilizing a "dry run" approach. This UVA was verified per revision 1 of Reference A.2.e. R2 R4

c. This Safety Assessment/Evaluation is written assuming only post-accident and training exercise usage of the modification. Any procedure initiation or revision for normal sampling will be addressed by DCN M06550. R2

d. Verification of tubing, valve, and support installation requires NE-CEB approval prior to declaring the system operable. For verification, see sheet 32 attached. R4

e. This SR deleted in Revision 1. R2

f. Attachment B to the Modification Criteria provides guidelines for installation of the stainless steel tubing. Deviations from these guidelines require NE-CEB approval via F-DCN. Maximum segment lengths (see Ref j Mod Criteria) are not to exceed 25 inches.

g. This SA/SE addresses only Unit 1. Therefore, one of the UVAs contained in reference A.2.dd does not affect this SA/SE, but does affect the Unit 2 PASF mission. However, the operator duties as assumed in Reference A.2.dd must be implemented in the required procedures (i.e. Ti-66, Reference A.2.i and A.2.k, etc.) and reviewed by RADCON (see ALARA Review). R2

h. The other UVA in Reference A.2.dd concerns the sample transport cart. The sample transfer cart must be verified to reflect the recommendations of Reference A.2.dd (TI-ROS-146). This UVA was verified per revision 4 of reference A.2.dd. R4

i. The REP-IP for operation/staffing of the OSC must be reviewed and revised, if needed, to include the staffing requirements of reference A.2.dd (the manpower requirements for RCL analyst and RADCON techs.) R5

B. Impact on Safety

B.3 Pipe Break: Tubing is TVA Class G or equal, non-safety related (Ref. A.2.b and A.2.jj) Technical Evaluation Checklist (SQEP-26, rev. 9, Att. 12) performance for Pipe Rupture resulted in complete "No" answers for this modification (Ref. A.2.q). Therefore, pipe (tubing) break for this modification is not credible and is not a concern for plant safety. R4

B.6 ALARA: An ALARA review has been completed per SQN SQEP-26 Attachment 12 and Mechanical/Nuclear Instruction M/NI 25.5.1 (Ref. A.2.r). Nuclear safety is not compromised due to ALARA considerations. A revised ALARA review was completed for the sample transport. R4

B.8 Seismic/Dead Weight: All tubing and fittings that will be added via this modification will be installed per Attachment A and B of the Modification Criteria. To ensure the tubing is qualified to seismic category I(L)B for QR related TVA Class G portion of the system and to ensure the seismic qualification of the sampling panel is not compromised, Calculation SCG-4M-00676 was performed (Ref.A.2.y). RZ

An existing spare penetration will be used for the valve stem extension. This precludes the need of creating a new penetration. This will therefore not affect the seismic design of the panel structure.

The RCS off gas transport cart has locking front casters (reference A.2.ff). Per SQA-66 (reference A.2.ee) these will be locked while the cart is unattended to prevent interaction with equipment important to safety. RZ

Thus, no adverse effects are created by the seismic/dead weight considerations of this modification.

B.11 Toxic Gases: The RCS off-gas sample is a small volume (15cc) and does not contain toxic gases, only radioactive gases. The operators performing the sampling process shall be equipped in self-contained breathing apparatus for radiological considerations. Additionally, the Post-Accident HVAC System, the ABGTS, and the RCL exhaust loads shall be in service to mitigate the consequences of airborne contamination. Therefore, there are no adverse effects upon nuclear safety due to toxic gases considerations. RZ

B.15 Primary Containment Integrity/Isolation: When the CIV's are opened, the plant will enter T/S L.C.O 3.6.1.1, Containment Integrity, which has a one (1) hour action time. The time constraints of L.C.O. 3.6.1.1 and the ability to close the sample CIV's make this not a concern for nuclear safety. RZ

B.17 Equipment reliability: The proposed bypass line will be a modification to an existing vendor supplied system. The modification will add a sampling feature to the system, but existing features and equipment will be unaffected. No other change in the way this system operates occurs. Nuclear safety is not compromised form the standpoint of equipment reliability.

B.18 Materials Compatibility: The additional fittings, and valve are specified to be stainless steel. The additional tubing is specified to be stainless steel and Tefzel (Ref. A.2.s). This is identical to the materials now in use in the system with the exception of the Tefzel tubing being used in lieu of the vendor supplied Teflon (Ref A.2.t). The Tefzel tubing will withstand the increased radiation exposure caused by the undiluted sample and is more than adequate for the design pressure and temperature (Ref A.2.jj and kk). The PASS panel supplier, Sentry Equipment Corporation has concurred with the use of Tefzel as a suitable replacement for Teflon (Ref A.2.mm). Thus material compatibility is not to nuclear safety concern. R4

B.20 Control Room habitability: No effluent release pathways are changed nor are postulated releases noticeably increased by this modification; PASF HVAC will function unchanged (Ref. A.2.f.4). The ABGTS will function during sample transport. In order to analyze samples in the RCL, the RCL support systems (detectors, lighting, HVAC) must be available. The contribution to outside air contamination (the release "plume") from the PASF HVAC will not change due to this modification (Ref. A.2.f.4). the Control Room pressurizing fans will draw outside air during an accident, including the release from the PASF HVAC/ABGTS/and RCL exhaust via the service building vents. Since the release from these pathways has not noticeable changed (see item B.53), dose to the operators in the Control Room has not changed. Therefore, this modification has no effect on Control Room habitability. R2

B.21 Environmental Qualification Category: The modification itself does not have any effect upon Environmentally Qualified equipment (Ref SQEP-26, Att. 12 checklist for DCN M06299B). After the modification is in place, no increase in total integrated dose for the PASF room will occur due to the modification not increasing the amount of radioactive material in the PASF room (Ref A.2.f.4). The dose from the transfer cart to EQ equipment is insignificant (reference A.2.dd). Thus, nuclear safety due to EQ categories is not a concern. R2

(other) B.53 GDC 19, Offsite Dose, Access To Vital Areas: GDC 19 limits dose to plant personnel to 5 rem whole body following an accident. The operator dose due to the collections, transport, analysis of the undiluted RCS off gas sample has been calculated by reference A.2.dd to be within GDC 19 limits. Offsite dose will remain the same since the quantity of radioactive material released from the PASF HVAC does not increase due to the modification (Ref A.2.f.4). The offsite dose contribution due to a direct release (RCL) from the minuscule 15 cc vial is negligible when compared to the volume released from containment due to assumed containment leakage post accident (an instantaneous 15 cc release compared to La = 225.17 SCFH (Reference A.2.hh) or 6,376,011 cc/hr). The RCS volume is 12,612 ft^3 and the containment volume is 1.2×10^6 ft^3 (Ref. A.2.f(6)). Given that the off-gas sample of RCS will be identical qualitatively to the containment atmosphere, the quantitative amount of curies (e.e., the concentration in Ci/cc) in the 15cc sample vial will be approximately 100 time greater than the Ci/cc of containment atmosphere based solely on the volume differences between RCS versus containment. (The containment has a greater volume for dilution purposes). The containment leakage, L_a, is 6.37×10^6 cc/hr (1.53×10^8 cc/day, Ref. A.2.hh). Thus, even given the 15cc sample vial can be assumed to be equivalent to 15 times 100 or 1500 cc of containment atmosphere, it represents 1500 divided by $1.53 \times 10_8$ or less than 0.001% of the total expected release. Further, the 15 cc sample vial will contain largely noble gases. Whereas the release from containment above usually will be filtered, the 15cc vial will not be. However, filtering is not an effective means of impeding noble gase release and thus the lack of filtering prior to release is not an issue in this case. RZ

The volume leaked from containment and assumed in the design bases to go to the atmosphere unfiltered (25% of containment leakage goes to the AB and ABGTS is delayed 5 min. and 75% goes to annulus and EGTS delay is 30 seconds (reference A.2.ii and A.2.f (6)) is:

AB(unfiltered)=0.25 (6,376,011 cc/hr) (1hr/60min)(5min) = 132,834cc

Annulus(unfiltered)=0.75(6,376,011 cc/hr)(1hr/3600s)(30s)= 39,850cc

Total unfiltered = 172,684cc

Comparing the equivalent unfiltered volume of 1500 cc to the above 172,684 cc shows an increase of less than 1% on the total amount of unfiltered leakage going directly to the environs. It should also be acknowledged (as stated in FSAR 15.5.3) that the highest activity assumed inside primary containment (Reg. Guide 1.4 LOCA) cannot occur coincidentally with the highest activity assumed for a PAS sample (i.e., the RCS is assumed intact and pressurized in the PAS dose analysis).

Therefore, the 15cc sample vial being taken outside the ABSCE is a negligible contribution to 10 CFR 100 or GDC 19 doses and is not a concern for nuclear safety. R2

During transport of the sample, it will be contained within a shielded transport cart; thereby minimizing operator dose and the dose contribution to the general area (3.5 mrem/hr at 18" per page 12.30 of reference A.2.dd). Thus offsite dose and vital area access are not a concern for nuclear safety.

(other)B.54 Explosive Gases: The sample vial will be drawing a 15 cc sample of RCS off-gas. The concentration of hydrogen gas in the sample will be quite low, and the size of the sample (15cc) is very small. Explosive tendencies are quite unlikely. Therefore, explosive gases are not a concern for nuclear safety.

Total of 3 RADCON Not. 2

(other)B.55 PASF Manpower: Reference A.2.dd requires at least 5 RCL analyst in order to complete the design basis (first) mission to the PASF and subsequent analysis in the RCL. Reference A.2.m requires daily sampling for 7 days and once a week till 30 days after the accident. Reference A.2.dd calculates RCL analysis dose at close to the GDC 19 limits for the first mission. ~~Therefore, 5 x 7 = 35 RCL analyst are required and similarly 2x7 = 14 total RADCON techs are required the first week. The ability to support this PAS function and continue to support the around-the-clock shift function in the Chem Lab and RADCON is an open item that must be specifically addressed.~~ The Radiological Emergency Plan (REP) Implementing Procedures (IP) for the OSC operation/staffing must be reviewed and revised if needed to address this item before utilization of the PAS to obtain undiluted RCS off gas samples (see SR A.3.i). R2 R4 R2 R4 R2 R4

It should be noted that according to FSAR Figure 15.5.3-7, the dose rate due to contained sources throughout the plant decrease substantially over the 30 day post-accident period and will result in decreased operator dose rates. In fact, computer output used in TIRPS-48, (Ref. 2.A.11, Microfiche # TVA-F-G100850: Executed Nov. 19, 1991) indicates the gamma shine inside containment is reduced approximately by a factor of ten, 24 hours following the large break LOCA. This information is consistent with FSAR Figure 15.5.3-7. ~~Additional man-power can be brought in from BFN/WBN for PAS training and duties.~~ R2 R4

Section B Conclusion

By the reasons given, this modification causes no adverse impact on nuclear safety.

C. Potential Technical Specification (T/S) Impact (Cont.)

Justification: T/S 6.8.5.e and Licensing Condition 2.F address Post Accident Sampling.

T/S 6.8.5.e requires the plant to have the capability to obtain and analyze various samples under accident conditions. This modification does not affect the PASS's ability to perform its original design function: diluted RCS off-gas samples will still be capable of being taken. The modification will allow undiluted RCS off-gas samples to also be taken.

The Licensing Condition 2.F addresses the requirement for having a Post Accident Sampling System, but this modification does not affect, remove or change the Pass except as stated above.

Nothing in this modification affects either TS 6.8.5.e or Licensing Condition 2.F.

T/S 3.3.3.7 for Post Accident Monitoring (PAM) requires Type A and/or Category 1 PAM variables to be addressed. Since the PASS is Category 3, this T/S is not Affected. (Ref A.2.v)

T/S indirectly related to this modification are:

1) This item deleted by Revision 1. R2

2) 3.6.1.1 - Primary Containment Integrity

3) 3.7.7 - Control Room Emergency Ventilation

4) 3.7.8 - Aux Bldg Gas Treatment System

None of the above indirectly related T/S items are affected by the modification.

D. Potential Safety Analysis Impact (Cont)

Justification: The modification does alter information presented in the UFSAR. No UFSAR text, graphs, or figures are involved; however, Table 7.5-2 will have an addition to state that the PASS has the capability for RCS off-gas grab sample acquisition for dissolved H2 analysis as stipulated in Deviation 22 to Reg Guide 1.97 (Ref A.2.w). No change to system design, function or operation as described in the UFSAR occurs. The modification does not change a radwaste system. The modification is not a special test or experiment. Full compliance to T/S is obtained as described in Section C of this Safety Assessment. Placing the bypass line and plug valve around valve RC-DV-2 does not adversely affect the existing sampling system. Procedure changes must be screened per the criteria in Site Standard Practice SSP-27.3.

Since the modification involves a UFSAR change, a safety evaluation is required. A CRFSAR has been prepared (Ref A.2.x).

The Safety Evaluation also addresses FSAR sections 9.4.10 and 15.5.3 (below) with respect to (1) offsite dose, (2) operator dose (both in the control room and in the PASF) and (3) access to plant vital areas.

UFSAR Sections Researched:

1.	1.2.2.11	Sampling & Water Quality System.
2.	7.4	Safety-Related Display Instrumentation.
3.	9.3.2	Process Sampling System.
4.	9.4.10	Post Accident Sampling Ventilation System.
5.	9.5.10	Post Accident Sampling Facility.
6.	15.5.3	Environmental Consequences of a Postulated Loss of Coolant Accident.

Figure 1: Sentry Equipment Corporation High Radiation Sampling System Reactor Coolant Sampling Flow Diagram

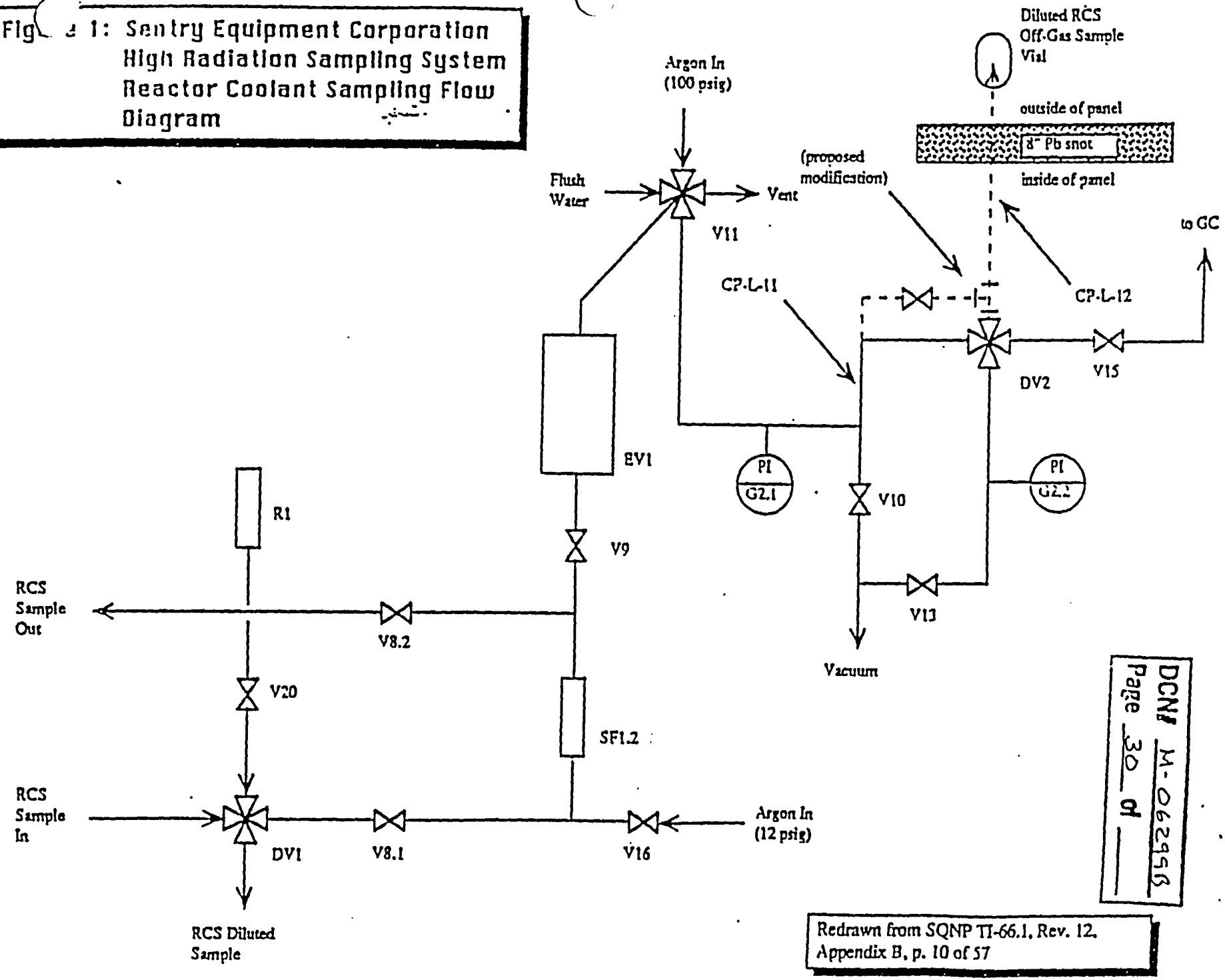

Redrawn from SQNP TI-66.1, Rev. 12, Appendix B, p. 10 of 57

DCN# M-062998
Page 30 of

SAFETY EVALUATION
DCN M-06299B

A. Accidents Evaluated as the Design Basis

A.1 Design Basis Accidents and Anticipated Operational Transients:
UFSAR 15.5.3 Events:

a. Environmental Consequences Due to the Operation of the Post-accident Sampling Facility.

b. Plant Accessibility Post LOCA.

A.2 Credible Failure Modes of Proposed Activity:

a. Transport pathway events - getting the sample from the PASF to the radiochemistry laboratory.

b. Valve failures -

i) Fail closed - Undiluted sample can not be obtained.

ii) Fail open/leak - Affects the acquisition of diluted RCS off-gas samples.

c. Tubing rupture - the tubing added by the modification experiences rupture.

d. Dropping of sample vial -

i) Vial breaks.

ii) Vial does not break.

B. Evaluation of Effects

B.1 Proposed modification will have no effect on the probability of occurrence of any accident previously evaluated in the UFSAR. The modification is located entirely within a vendor supplied system which is categorized TVA Class G piping or equivalent, non-safety related, and the modification itself is also Class G or equivalent (see Modification Criteria for DCN M06299B). In an accident case, the modification will not be used except when an accident (LOCA) has occurred. The probability of an accident occurring is not increased because the accident has already occurred for this system to be utilized. R4

In a training situation, T/S LCO 3.6.1.1, Containment Integrity must be entered as specified. Performance of sampling techniques will be identical to those prior to the modification. The only exception being the acquisition of a quantity of off-gas while the source of this off-gas has been isolated from the RCS. Entry into LCO 3.6.1.1 with its restrictive 1 hour Action time minimizes the probability of an accident while containment integrity is not established.

Therefore, there is no increase in the probability of occurrence of any accident previously evaluated in the UFSAR.

B.2 The proposed modification will not increase the probability of occurrence of a malfunction of equipment important to safety. The modification and all equipment associated with it are TVA Class G, or equal, non-safety related. The Tefzell tubing which replaces the vendor supplied Teflon has been qualified to its design temperature, pressure, and applicable radiation exposure (Ref 2.A.jj and kk). Vendor concurrence was obtained from Sentry Equipment to substitute Teflon with Tefzell (Ref 2.A.mm). Any equipment important to safety in the area is not adversely affected due to this modification because the equipment will not see an increase in radiation dose since the modification does not change the total integrated dose to the PASF. Similarly, no increase in temperature, pressure and humidity are expected because the modification does not alter existing lines which could have environmental effects on equipment important to safety. During the sample transport from the PASF to the RCL, the 15 cc vial will be enclosed in a shield cart (pip), it will be attended by at least two individuals (reference A.2.dd and SR A.3.g) and has locking front casters to avoid interactions with equipment important to safety if left unattended (reference A.2.ee). Thus no impact to equipment important to safety is seen, and therefore, there is no increase in the probability of occurrence of a malfunction of equipment important to safety. R4

B.3 The proposed modification will not increase the consequences of any accident previously evaluated in the UFSAR. The environmental consequences due to the operation of the PASS discussed in UFSAR Section 15.5.3 are based on the volume of reactor coolant accumulated in the post-accident sample collector tank (SCT) which is vented to the PASS HVAC System. The credible failure modes result in release of activity to the PASF atmosphere (outside the sample panels where the operators will be performing the sampling procedure) which is also vented to the PASS HVAC System. The credible failure modes do not increase the amount of activity postulated to be released to the exhaust system, only the pathway by which it reaches the PASS HVAC System. In other words, the quantity of radionuclides does not change. Instead of being deposited directly to the PASF HVAC filters as UFSAR 15.5.3 describes, the credible failure modes will first put a small fraction of airborne gas into the room instead of to the SCT. From the room the PASF HVAC will remove the airborne gas and filter it through its filter housings. The pathway is changed, not the end amount of radionuclides or the quantity or the final location (the PASF HVAC filters). Therefore, the offsite dose due to this change in operation of the PASS is not increased.

Similarly, PASF HVAC will continue to function unchanged. The contribution to outside air contamination (the release "plume") from the PASF HVAC will not change due to this modification (Ref. A.2.f.4). The Control Room pressurizing fans will draw outside air during an accident, including the release from the PASF HVAC. R2

Sampling operator dose is calculated in part by Ref. A.2.e of the Safety Assessment. The total mission dose calculated in reference A.2.dd is within GDC 19 limits provided the operator duties are distributed as assumed (see SR A.3.g).

During the sampling transport from the PAS to the RCL, the ABGTS will be in operation to holdup and filter any release. During transport, the sample is contained in a shielded (pig) cart, attended by two individuals, and secured from moving (wheels locked) if left unattended. This provides adequate control to guard against a release from the vial during transport. While inside the RCL, necessary support functions (lighting, power supplies, detectors, HVAC) are assumed available or there would be no basis for returning a sample there for analysis. Any release from the RCL is via the exhaust hoods and their HEPA filters (no charcoal) to the service building (SB) vent (a monitored point). R2

The worst case release would be the discharge of the entire contents of 15 cc vial directly to the RCL and out an exhaust hood to the SB vent taking no credit for the non-ESF filters. The release (15cc), is diluted within the RCL and exhausted via an RCL hood, further diluted by other flows in the SB vent and finally discharged to the environs. This 15 cc release is insignificant when compared to the existing containment leakage. See SA item B.53 for more analysis. Therefore, the doses resulting from operation of the PASF are within the 10CFR100 limits. As such the changes in consequences are so small it cannot be reasonably concluded that the consequences have changed, thus the transport/analysis of the sample need not be considered an increase in consequences (Reference A.2.gg, page 3-5 and 3-6). R2

Access to plant vital areas is not affected since the PASF is located in an enclosed room in which no equipment required for safe shutdown of the plant or to mitigate the consequences of an accident is located and to which access must be available. The transport cart is sufficiently shielded to reduce the general area radiation dose such that access/egress is unaffected. R2

B.4 The proposed modification will not increase the consequences of a malfunction of equipment important to safety. As stated before, the modification and all equipment related to it (e.g., the PASS) are non-safety related. The only equipment important to safety associated with the PASF in the area of the modification are the containment isolation valves. Addition of the modification will not cause an increase in the dose rate or other parameters as explained in Part B.2. As such, the proposed modification will not increase the consequences of a malfunction of equipment important to safety.

B.5 The proposed modification will not create the possibility for an accident of a different type than evaluated in the UFSAR. The modification is isolable from the RCS by containment isolation valves and therefore can not adversely affect the RCS to create an accident of a different type.

In an accident case, if the modification is in use, then an accident has already happened. Therefore, the accident is already in progress and was not created by the modification. No other credible accident scenario could be postulated.

In a training case, since the CIVs are opened for training purposed by approved plant procedure TI-66.2 (Ref. A.2.e), LCO 3.6.1.1 is applicable and shall be addressed. The time constraints of the 1 hour Action time for LCO 3.6.1.1 and the ability to close the CIVs preclude the creation of an accident of a different type.

Thus, the proposed modification does not create the possibility for an accident of a different type than evaluated in the UFSAR.

B.6 The proposed modification will not create the possibility for a malfunction of a different type than evaluated in the UFSAR. The credible failure modes listed in part A.2 will be addressed separately:

a. Transport pathway events - The first radiological assessment (Ref A.2.e) has as its scope the acquisition of the sample and placement of the sample in the sample carrier. Another radiological assessment (reference A.2.dd) was performed for the mission dose. Special requirements A.3.b, A.3.g, and A.3.h must be satisfied to ensure the GDC 19 dose limits are met. R2

b. Valve failures -

i) Fail closed - Undiluted sample can not be obtained. However, a diluted sample can still be obtained as currently available.

ii) Fail open/leak - Affects the acquisition of diluted RCS off-gas samples. Sample line can be isolated using existing valves to terminate the release to the PASF (see Figure 1, valves RC-V-11 and RC-V-9, as well as containment isolation valves). SCBA is in use by the panel operators to provide protection from airborne contamination (accident situation only). PASS HVAC is in service to mitigate the airborne release (Ref A.2.f.4). Since the valve failures can be mitigated using existing equipment, the modification does not create the possibility for a malfunction of a different type than described in the UFSAR for valve failure.

c. Tubing rupture - All tubing is located inside the sample panel. Undiluted RCS off-gas lines (constructed of stainless steel) already exist inside the panel before the modification. The existing Teflon tubing (CP-L-12) is being replaced by Tefzell tubing by this modification, and the new bypass line is made of stainless steel. Vendor concurrence to use Tefzell in lieu of Teflon was obtained (Ref 2.A.mm). The Tefzell tubing has been qualified for design pressure, temperature, and applicable radiation exposure (Ref 2.A.jj and kk). Therefore this is not a new credible failure. R3 R4

d. Dropping of sample vial -

i) In an accident situation, an unbroken vial affects operator dose by increasing exposure time while retrieving the vial and placing it in the sample carrier. The radiological assessment for DCN M06299B assumes 30 seconds to get the sample into the vial and the vial into the carrier with total dose in this 30 seconds of 75 mR whole body (worst case). If the vial can be retrieved within the 30 second time-frame, then retrieval with tongs shall be performed. If the vial orients itself in such a manner that retrieval is not possible, then the sampling operators shall vacate the area to assess the situation. RADCON and the Technical Support Centers are operational to provide guidance. R2

For training cases, if the vial is dropped and does not break, it will simply be retrieved, and the exercise can continue. Once the training sample has been obtained (i.e., the 15 cc vial is filled), the training sample will be essentially identical to a non-accident, gaseous sample having a smaller total volume and isotopic inventory than most samples acquired and analyzed on a routine basis by SQN Radiochemistry Laboratory (RCL) personnel. To ensure 10CFR20 limits for dose to personnel are not exceeded, standard radiological protection practices shall be followed (RADCON support when needed, use of RWP, personal dosimetry, etc.).

ii) In an accident case, a broken vial releases 15 cc of undiluted RCS off-gas to the PASF atmosphere where it is diluted and vented to the PASS HVAC. If dropped in the RCL, it will be diluted by the operation of the exhaust hoods. SCBA worn by the operators provides protection from ingestion of the airborne contamination. Operators can vacate the area until the airborne contamination levels have been reduced by the HVAC and the dose rates have been assessed by RADCON. R

For training cases, a broken vial presents an airborne release in the PASF sampling operator area. The PASF HVAC will be in service and the contents of the 15 cc vial will be diluted and vented from the sampling operator area. To ensure 10CFR20 limits for dose to personal are not exceeded, standard radiological protection practices shall be followed (RADCON support when needed, use of RWP, personal dosimetry, etc.). Sampling operators shall immediately leave the area and request RADCON assistance.

B.7 The proposed activity does not reduce the margin of safety as defined in the basis for any Technical Specification. No T/S impact was determined to exist.

T/S 6.8.5.e and Licensing Condition 2.F address Post Accident Sampling.

T/S 6.8.5.e requires the plant to have the capability to obtain and analyze various samples under accident conditions. This modification does not affect the PASS's ability to perform its original design function: diluted RCS off-gas samples will still be capable of being taken. The modification will allow undiluted RCS off-gas samples to also be taken.

The Licensing Condition 2.F addresses the requirement for having a Post Accident Sampling System, but this modification does not affect, remove, or change the PASS except as stated above.

Nothing in this modification affects either TS 6.8.5.e or Licensing Condition 2.F.

T/S 3.3.3.7 for Post Accident Monitoring (PAM) requires Type A and/or Category 1 PAM variables to be addressed. Since the PASS is Category 3, this T/S is not affected. (Ref A.2.v)

T/S indirectly related to this modification are:

1. This item deleted by Revision 1.
2. 3.6.1.1 - Primary Containment Integrity.
3. 3.7.7 - Control Room Emergency Ventilation.
4. 3.7.8 - Aux Bldg Gas Treatment System.

None of the Bases of the above indirectly related T/S items are affected by the modification.

ADD NEW CONNECTION ON PASS PANEL TO ALLOW AN UNDILUTED SAMPLE OF REACTOR COOLANT OFF-GAS TO BE TAKEN

DCN# M-10
Page 33

" SPECIAL REQUIREMENTS OR UNVERIFIED ASSUMPTIONS "

1. VERIFICATION OF THE TUBING, VALVE, AND SUPPORT INSTALLATION REQUIRES NE-CEB APPROVAL PRIOR TO DECLARING THE SYSTEM OPERABLE. TO ASSIST IN INSTALLATION, ATTACHMENT A DEPICTS AN ISOMETRIC OF THE MODIFICATION AND THE PLUG VALVE, AND THE PARTS FOR THE VALVE.

   NE-CEB VERIFIED TUBING, VALVE AND SUPPORT INSTALLATION: [signature] / 11/30/91
   NE-CEB REP. DATE

2. TOTAL MISSION DOSE CALCULATION (TI-RPS-146) IS BEING REVISED DUE TO CAQR SQP 90 0191 BEING WRITTEN AGAINST IT. THIS MODIFICATION HAS AN UNVERIFIED ASSUMPTION (UVA) AGAINST IT IN THAT THE TOTAL DOSE FOR SAMPLE ACQUISITION WILL NOT IMPACT TOTAL MISSION DOSE IN SUCH A MANNER THAT THE 5R TOTAL DOSE LIMIT IS EXCEEDED AS CALCULATED BY TI-RPS-146. UNTIL THE UVA IS RESOLVED, A HOLD ORDER IS TO BE PLACED ON INSTALLED VALVE RC-V-23. R4

3. THIS STEP DELETED PER FDCN# F-07036.

4. A HOLD ORDER IS TO BE PLACED ON VALVE RC-V-23 UNTIL TRANSPORT CONTAINER AND HANDLING TECHNIQUE ISSUES ARE RESOLVED. HOLD ORDER CANNOT BE RELEASED UNTIL SPECIAL REQUIREMENTS OR UNVERIFIED ASSUMPTIONS IN STEP 6 IS COMPLETED.

   HOLD ORDER PLACED ON VALVE# RC-V-23: 1-91-2363 0110 [signature] / 11-22-91
   COG. ENGR. DATE

5. NORMAL SAMPLING IS NOT ADDRESSED IN THIS DCN OR IN THE ACCOMPANYING SA/SE.

AA000164

SIGNIFICANT CORRECTIVE ACTION REPORT

SCAR No. 5 0 5 C 1 9 2 0 0 4 Rev. 0

CONTINUATION SHEET

Identify the information that is being continued on this sheet (for example: Description of Condition).

NOTE: Entries made on this sheet shall be signed and dated.

TROI sect 16

A study of boric acid dilution values was conducted to determine the actual dilution factor.

A series of 20 RCS samples were taken on U1 PASS. These samples were analyzed for boron concentration utilizing a sodium hydroxide titrant. The results of these analyses were compared to the boron concentration found in U1 hot sample from RCS samples. The actual dilution factor for the valve was determined to be 0.020 mL. An uncertainty of ±7% existed in the data due to a combination of ±5% from the sodium hydroxide titrant method used on the ion chromatograph for the boron analysis.

A series of 50 boron standards were diluted by the U2 PASS dilution valve. The results of these analyses were compared to the prepared concentration for the boron standard. The dilution factor for the valve was determined to be 0.015 mL. An uncertainty of ± 8% existed in the data. These analyses were performed utilizing an ion chromatography method with a mannitol/bicarbonate eluant. This method contributes only 2% uncertainty. The remaining 6% is due to a poorly performing dilution valve which will be replaced.

Gregory D. Taylor 1-15-93 — PASS Specialist

A. Perdue 1/15/93 — CPCM

U.J. 1/15/93

CG 000058

AA000165

SIGNIFICANT CORRECTIVE ACTION REPORT

SCAR No. 5.9.5.C.9.1.2.0.0.4 Rev. 0

Identify the information that is being continued on this sheet (for example: Description of Condition).

NOTE: Entries made on this sheet shall be signed and dated.

TROI seq 17

The accepted criteria for actual dilution factor results has been established by procedure 9-TI-CEM-260-020.9. (comparison of PASS sample boron concentration to boron concentration in RCS sample obtained in the hot sample room) which exceed an error of ±2% will initiate properly required sampling and corrective action to ensure that an overall uncertainty of ±5% is achieved.

Gregory D. Tate 1-15-93 — PASS Specialist

A. Bodine CPCM 1/15/93

1/15/93

MS 1/15/93

9. Initiate a WR to replace the PASS diluter valve and retest both units utilizing the mannitol/bicarbonate PASS IC method. 1/1/93.

Gregory D. Tate 1-15-93 — PASS Specialist

A. Bodine 1/15/93 CPCM

1/15/93

SIGNIFICANT CORRECTIVE ACTION REPORT

SCAR No. SQSCA920004 Rev. No. 0

Continuation Sheet

5F Extension TROI Seq CONTINUED NOTE: Entries made on this sheet shall be signed and dated.

Step No. 16 + 17

In reference to item 7 of Corrective Action Plan SQSCA920004

7. Perform a study of dilutor valve performance to establish actual dilution factor.

To be completed by 10/1/92 - GDT-CEM.

Study of U1 performed on 9/10/92. Results acceptable.
Study of U2 performed on 9/22/92. Results unacceptable.
U2 PASS ventilation WR #C082522 impeded sampling. Instrument (ion chromatograph) problems suspected as source of U2 analysis data reduction being unacceptable. Request closing of item for U1 and extension for U2 until WR worked and re-sampling and re-analysis can be performed. Extension date of 11/1/92 requested.

9-29-92

Signature/Date Gary Taylor / 9-25-92

Title RLA / PASS sprinkler

9-29-92

7/30/92

This extension applies to TROI seq 16. Because TROI seq 17 is a successor activity it too is extended by inference. Maintaining the same interval yields a date of 11/30/92 for TROI seq 17. 9/30/92

WA 19584A (NP 1-92) [4-92]
L020201/996/9

SIGNIFICANT CORRECTIVE ACTION REPORT

SCAR No. S E S C A 9 2 0 0 0 4 Rev. 0

Continuation Sheet

Identify the information that is being continued on this sheet (for example: Description of Condition).

NOTE: Entries made on this sheet shall be signed and dated.

EXTENSION REQUEST

(5F) Chemistry requests that the TROI due date for developing a corrective action plan be extended from 6/10/92 to 6/30/92. This extension is requested because the Chemistry individual qualified to perform root cause analysis has only been available to address this SCAR since 6/5/92. This individual must have sufficient time to gain knowledge of the PASS and related requirements, perform a thorough investigation/root cause analysis, and prepare a report of all findings.

Alan K. Banziger 6/9/92

William T. Jones 6/9/92

G. Buck 6/10/92

Irving R. Higgs 6/10/92

SIGNIFICANT CORRECTIVE ACTION REPORT

SCAR No. S Q S C 4 9 2 0 0 ~~X~~ 4 Rev. ~~2~~ 0

Continuation Sheet DJB 10/30/92 9/25/93

_____ CONTINUED

Step No.

NOTE: Entries made on this sheet shall be signed and dated.

For U-2 PASS:

Extension of item 7, diluter valve study is required due to system ventillation system inoperability. WR CØ82522 has been written. Study for U2 will be performed when WR is Complete. Extension requested for due date of ~~11/30/92~~ 12/30/92 per telecon w/ D. Bodine on 11/2/92.

Debby Bodine for W.F. Jocher 10/29/92

Pat Lydon 10/30/92

Date change due to schedule changed by RJB:

Greg Taylor
8697

Telecon w/ Debby Bodine 10/30/92, using 11/12/92 as interim date until site VP signs TLE.

10/30/92 Greg Wilson

QA concurs: W.A. Prewitt 10/30/92

CG 000062

AA000169

John Holland for SITE VP / 11/3/92 DATE

SIGNIFICANT CORRECTIVE ACTION REPORT

SCAR No. S O S C A 9 2 0 0 0 4 - Rev. No. 20

Continuation Sheet

F EXTENSION REQUEST CONTINUED NOTE: Entries made on this sheet shall be signed and dated.

Step No. TPOI seq nos 16 + 17.

U2 PASS:

ension of item 7, diluter valve study is required due to ventilation system inoperability. . C075095 and C 013668 have been written. Study for U2 will be performed when WRs have been ·ked and system has been restored to operational status. Extension requested for due date 1/15/93.

R.O.:

Signature/Date 11-24-92

Title RLA/PASS Specialist

Dept Mgr: 11/25/92

QA: W. A. Pruett, Jr. 11/25/92

Site V.P. Approval: for JLW 11/25/92

19584A (HP 1-92) [4-92]
'L020201/996/10

CG 000063

AA000170

INVESTIGATION REPORT

FAILURE TO MEET NUREG 0737 REQUIREMENTS FOR POST-ACCIDENT SAMPLING

1.0 Problem Description

1.1 Boron analyses/method cannot be performed in three hours or less even with the most proficient personnel. NUREG 0737 requires Post-Accident Sampling System (PASS) sample analysis within 3 hours after a decision is made to collect samples. Approximately 25% of personnel are capable of meeting time restrictions of three hours or less excluding boron analysis.

1.2 Number of personnel capable of performing PASS sampling/analyses is not sufficient to meet frequency and duration required by NUREG 0737 (1 analysis/day for 7 days following accident).

1.3 Diluted PASS samples do not meet comparison criteria when compared with hot sample room results. NUREG 0737 requires that PASS reactor coolant and containment atmosphere samples be representative of the reactor coolant in the core area and containment atmosphere following an accident or transient.

2.0 Scope of Investigation

A root cause analysis of the problems stated above was performed using Hazard-Barrier-Target analysis and Causal Factors charting. Information was obtained through interviews with personnel experienced with PASS design and operation, dose calculation documentation, and review of requirements.

3.0 Results of Investigation

The following sections contain pertinent facts regarding the three problems stated in Section 1.0.

3.1 PASS Boron Analysis

PASS boron analysis is performed using ion chromatography.

The ion chromatograph utilized to perform PASS boron analysis is normally configured to analyze secondary system cations.

Reagents must be prepared prior to instrument operation (30 to 45 minutes).

Minor replumbing of the instrument is required to switch from cation analysis to PASS boron analysis (20 to 30 minutes).

Analysis of one sample requires a 15-minute run.

Instrument must stabilize for at least 30 minutes prior to an initial run.

3 standards must be analyzed to develop a calibration curve, and 1 check standard must be analyzed prior to PASS sample analysis (60 to 75 minutes).

A dedicated instrument or alternate method for PASS analysis is not currently available.

3.0 Results of Investigation (continued)

3.2 Personnel

Technical Specification section 6.8.5.e requires that capability to obtain and analyze PASS reactor coolant be ensured through training, procedures, and maintenance programs.

25% of laboratory personnel are proficient in PASS sampling/analysis.

PASS training and exercises have been repeatedly cancelled or delayed.

Two to four Chemistry personnel are required to support PASS sampling/analysis depending on the mission.

PASS mission dose calculations (TI-RPS-146/NEA 3026) indicate that two to three personnel would receive near maximum allowable dose for each PASS mission.

PASS mission dose calculations indicate that the majority of dose is obtained during travel between the PASS facility, radiochemical laboratory, and Operation Support Center (OSC).

Studies have shown that initial dose rates should decrease significantly over time.

3.3 Accuracy of PASS sample Analysis

Total gamma activity (TGA) has been historically used to verify PASS sample accuracy.

TGA has a wide agreement range (0.5 to 2.0) when compared to Hot Sample Room analytical results.

Other PASS sample analytical parameters have a much tighter agreement range than TGA.

PASS dilutor valve dilution factor was assumed to be exactly 1:1000.

Actual PASS dilutor valve dilution factor has never been verified.

4.0 Conclusions

Based on the evidence presented in Section 3.0, the following conclusions may be drawn:

4.1 PASS Boron Analysis

The instrument is not dedicated to PASS boron analysis, resulting in longer set-up and analysis time.

Instrument availability and analysis time were inadequately assessed in regard to the 3-hour time limit.

4.0 Conclusions (continued)

4.2 Personnel

The PASS training/execercise program does not ensure personnel proficiency.

Personnel proficiency was affected by repeated cancellation or delay of activities designed to increase and maintain proficiency.

Plant design contributes to high projected dose, resulting in quick "burn-out" of qualified personnel.

Dose rate changes over time were not previously considered in determining number of personnel required to meet the NUREG 0737 sampling requirements.

4.3 Accuracy of PASS Sample Analysis

The parameter used to verify PASS sample accuracy has inadequate precision.

The actual PASS sample dilution factor could not be properly verified due to the inaccuracy of the parameter chosen for verification.

5.0 Causes

5.1 Basic Causes

Inadequate method/equipment for PASS boron analysis.

Inadequate training/practice.

Inadequate long-term dose assessment.

Low management priority.

Inadequate verification of PASS sample dilution.

5.2 Root Cause

Inadequate study/review.

Hazard	Barrier	Target
PASS boron cannot be analyzed within 3 hours.	Method Personnel Equipment	NUREG 0737 requirement
Improper method	Analysis time	Method
Analysis time too long	Time study	Analysis time
Inadequate time study	Qualified evaluator Thoroughness	Time study
Personnel not proficient	Training Practice	Personnel
Inadequate training	Qualification program	Training
Inadequate qualification	Instruction skill Lesson plan	Qualification program
Insufficient practice	Program Priorities	Practice
Inadequate program to maintain proficiency	Requirements	Program
Inadequate requirements	Requirements source	Requirements
Low priority	Management practice	Priorities
Inadequate instruction	Instructor qualification	Instruction skill
Inadequate instructor	Instructor evaluation	Instructor qualification
Inadequate lesson plan	Preparer qualification Thoroughness	Lesson plan
Preparer not qualified	Preparer evaluation	Preparer qualification
Inadequate equipment	Dedicated equipment	Equipment
Equipment not dedicated	Sufficient equipment	Dedicated equipment
Insufficient equipment	Priorities Budget Equipment study	Sufficient equipment
Insufficient budget	Management practice	Budget
Inadequate equipment study	Evaluator qualification Throroughness	Equipment study

Hazard	Barrier	Target
Insufficient personnel to meet NUREG 0737 sampling requirements	Qualified personnel Training	NUREG 0737 requirement
Insufficient qualified personnel	Dose rate	Qualified personnel
Dose limit reached	No. personnel involved Facility design Dose rates decrease	Dose rate
No. personnel inadequate	Manpower	No. personnel involved
Insufficient manpower	Management policy Budget	Manpower
Inadequate facility design	Design study Options	Facility design
Inadequate design study	Designer qualifications Thoroughness	Design study
Limited options	Plant design	Options
PASS not original plant design	Plant vintage	Plant design
PASS is retrofit design (not optimum)	Post -TMI requirements	Plant vintage
Dose rate decrease not considered over duration of PASS sampling.	Dose rate study	Dose rate decrease
Inadequate long-term dose rate study	Thoroughness	Dose rate study

Training
(See H-B-T for Boron Analysis)

Hazard	Barrier	Target
PASS sample analyses do not meet acceptance criteria when compared to RCS sample analyses.	Sample collection Analytical methods Acceptance criteria	Analytical accuracy
Dilution factor not as expected	PASS sample dilution	Sample collection
Dilution factor not verified	Verified sample dilution	PASS sample dilution
Inappropriate acceptance criteria	Appropriate parameters Appropriate precision	Acceptance criteria
Inappropriate parameter used	Proper study	Appropriate parameters
Insufficient precision	Tight range of precision	Appropriate precision
Inadequate study	Evaluator qualification Thoroughness	Proper study

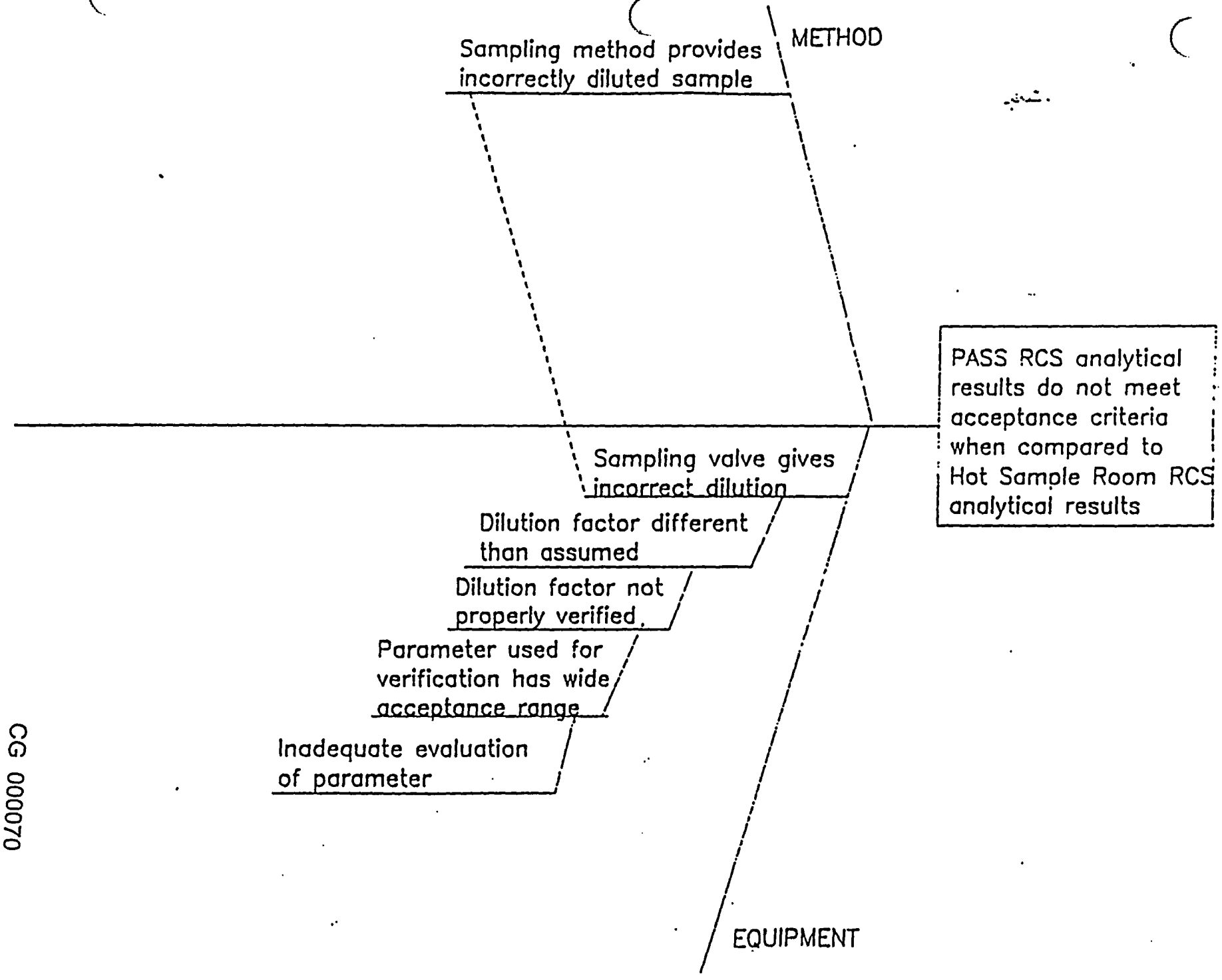
METHOD
Sampling method provides incorrectly diluted sample
PASS RCS analytical results do not meet acceptance criteria when compared to Hot Sample Room RCS analytical results
Sampling valve gives incorrect dilution
Dilution factor different than assumed
Dilution factor not properly verified
Parameter used for verification has wide acceptance range
Inadequate evaluation of parameter
EQUIPMENT

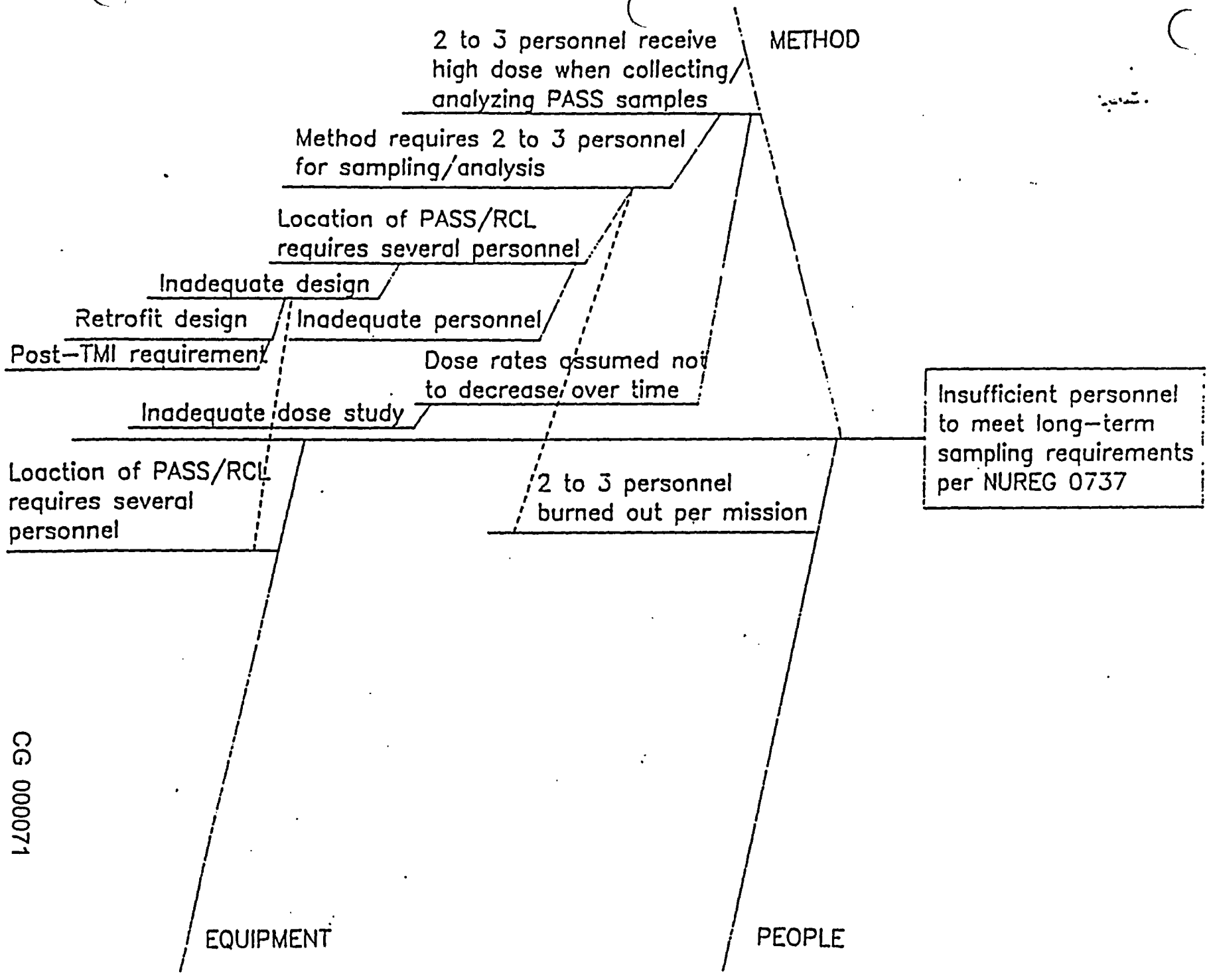

AA000178

CG 000071

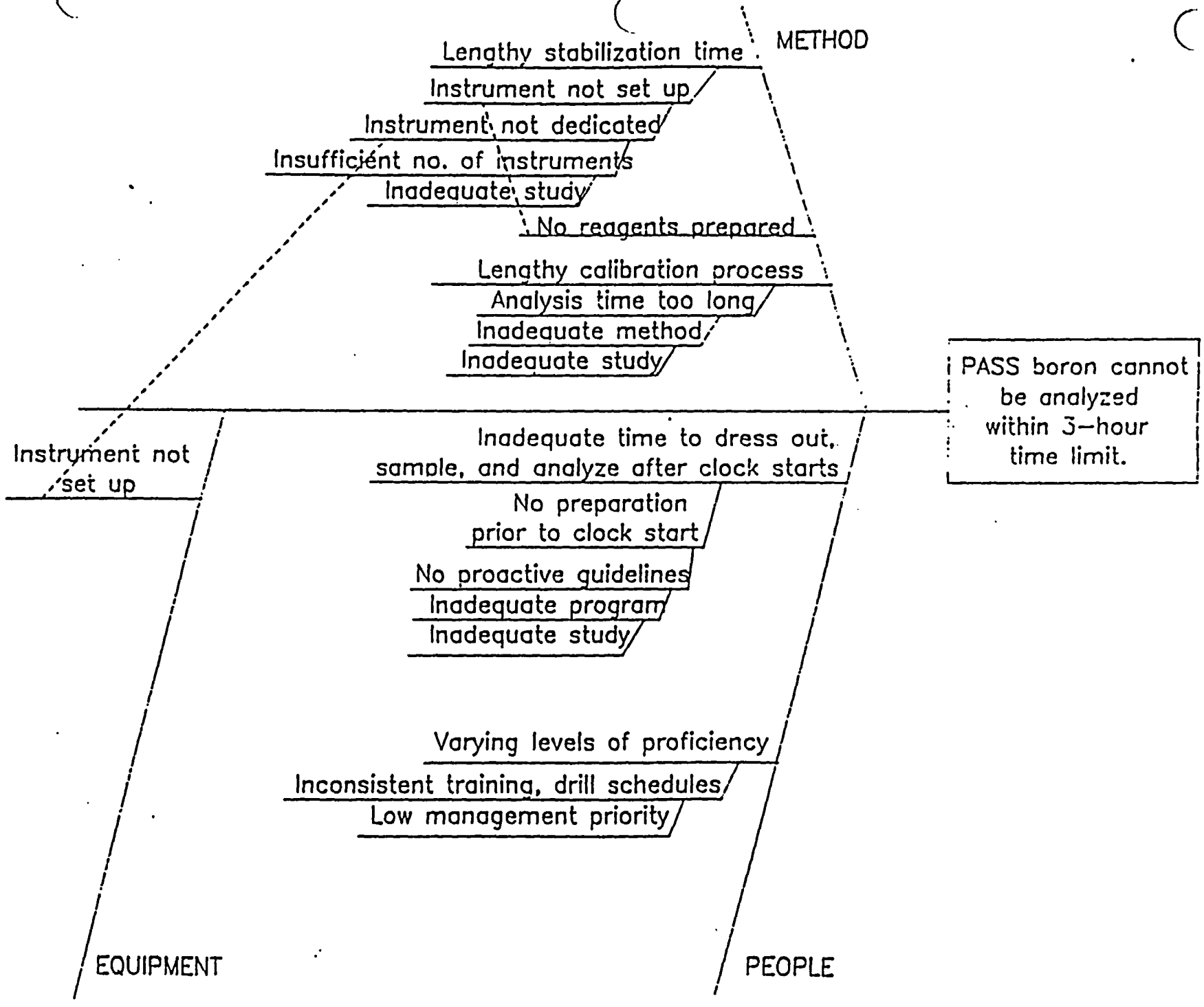
METHOD
Lengthy stabilization time
Instrument not set up
Instrument not dedicated
Insufficient no. of instruments
Inadequate study
No reagents prepared
Lengthy calibration process
Analysis time too long
Inadequate method
Inadequate study
PASS boron cannot be analyzed within 3-hour time limit.
Instrument not set up
Inadequate time to dress out, sample, and analyze after clock starts
No preparation prior to clock start
No proactive guidelines
Inadequate program
Inadequate study
Varying levels of proficiency
Inconsistent training, drill schedules
Low management priority
EQUIPMENT
PEOPLE

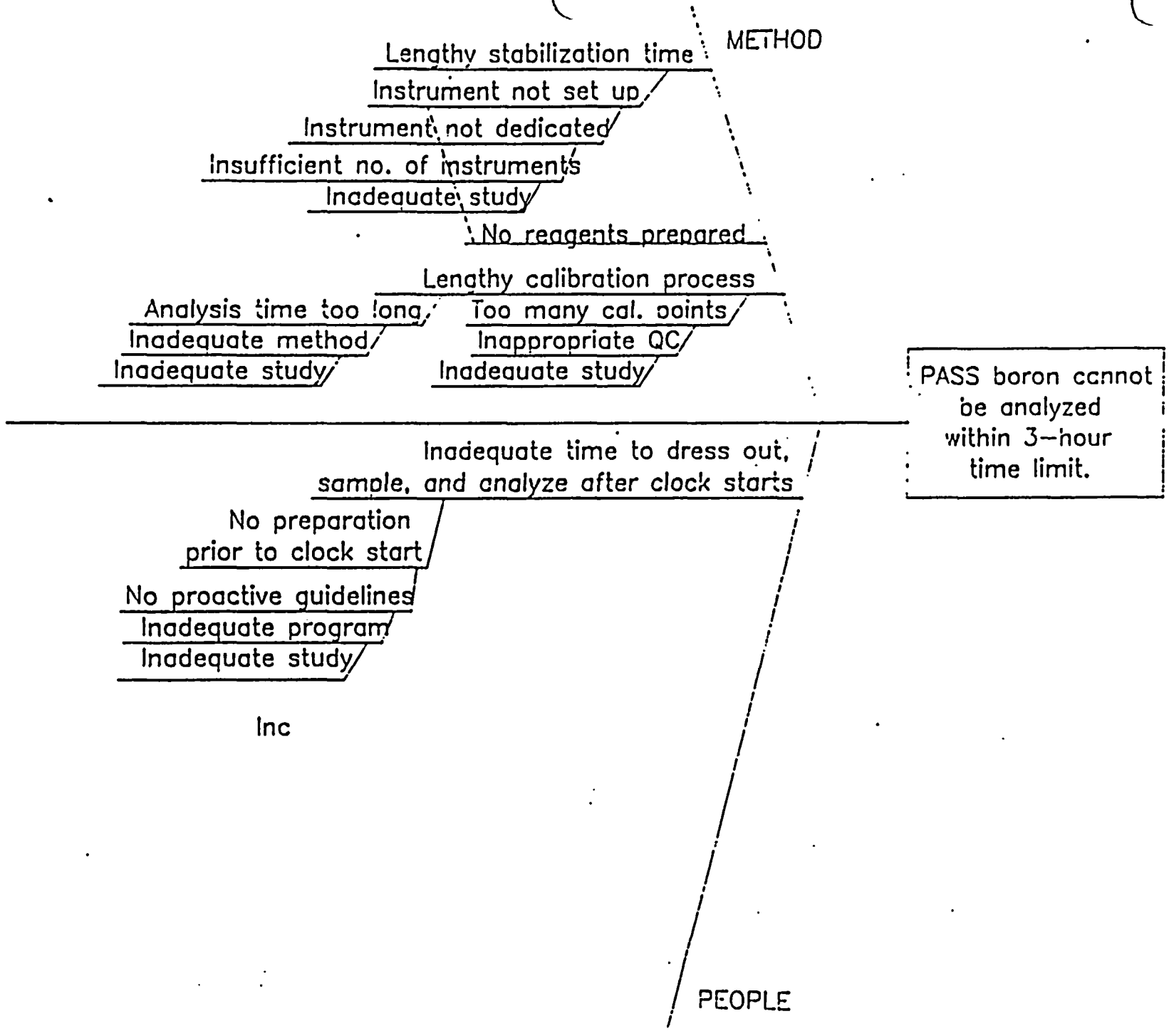

AA000180

CG 000073

II.B.3 POSTACCIDENT SAMPLING CAPABILITY

Position

A design and operational review of the reactor coolant and containment atmosphere sampling line systems shall be performed to determine the capability of personnel to promptly obtain (less than 1 hour) a sample under accident conditions without incurring a radiation exposure to any individual in excess of 3 and 18-3/4 rem to the whole body or extremities, respectively. Accident conditions should assume a Regulatory Guide 1.3 or 1.4 release of fission products. If the review indicates that personnel could not promptly and safely obtain the samples, additional design features or shielding should be provided to meet the criteria.

A design and operational review of the radiological spectrum analysis facilities shall be performed to determine the capability to promptly quantify (in less than 2 hours) certain radionuclides that are indicators of the degree of core damage. Such radionuclides are noble gases (which indicate cladding failure), iodines and cesiums (which indicate high fuel temperatures), and nonvolatile isotopes (which indicate fuel melting). The initial reactor coolant spectrum should correspond to a Regulatory Guide 1.3 or 1.4 release. The review should also consider the effects of direct radiation from piping and components in the auxiliary building and possible contamination and direct radiation from airborne effluents. If the review indicates that the analyses required cannot be performed in a prompt manner with existing equipment, then design modifications or equipment procurement shall be undertaken to meet the criteria.

In addition to the radiological analyses, certain chemical analyses are necessary for monitoring reactor conditions. Procedures shall be provided to perform boron and chloride chemical analyses assuming a highly radioactive initial sample (Regulatory Guide 1.3 or 1.4 source term). Both analyses shall be capable of being completed promptly (i.e., the boron sample analysis within an hour and the chloride sample analysis within a shift).

Changes to Previous Requirements and Guidance

This requirement was originally issued to all operating plants by letters dated September 13 and October 30, 1979. Significant changes in requirements or guidance are:

(1) Allows combined time of 3 hours or less for sampling and analysis.

(2) Specifies that licensee may use online sampling and analysis to meet the 3-hour time requirement but must provide capability to remove grab samples of reactor coolant and containment atmosphere for separate analysis.

(3) Implementation date has been changed to January 1, 1982.

(4) Provides design guidance for sampling and analytical capability.

Clarification

The following items are clarifications of requirements identified in NUREG-0578, NUREG-0660, or the September 13 and October 30, 1979 clarification letters.

(1) The licensee shall have the capability to promptly obtain reactor coolant samples and containment atmosphere samples. The combined time allotted for sampling and analysis should be 3 hours or less from the time a decision is made to take a sample.

(2) The licensee shall establish an onsite radiological and chemical analysis capability to provide, within the 3-hour time frame established above, quantification of the following:

(a) certain radionuclides in the reactor coolant and containment atmosphere that may be indicators of the degree of core damage (e.g., noble gases; iodines and cesiums, and nonvolatile isotopes);

(b) hydrogen levels in the containment atmosphere;

(c) dissolved gases (e.g., H_2), chloride (time allotted for analysis subject to discussion below), and boron concentration of liquids.

(d) Alternatively, have inline monitoring capabilities to perform all or part of the above analyses.

(3) Reactor coolant and containment atmosphere sampling during postaccident conditions shall not require an isolated auxiliary system [e.g., the letdown system, reactor water cleanup system (RWCUS)] to be placed in operation in order to use the sampling system.

(4) Pressurized reactor coolant samples are not required if the licensee can quantify the amount of dissolved gases with unpressurized reactor coolant samples. The measurement of either total dissolved gases or H_2 gas in reactor coolant samples is considered adequate. Measuring the O_2 concentration is recommended, but is not mandatory.

(5) The time for a chloride analysis to be performed is dependent upon two factors: (a) if the plant's coolant water is seawater or brackish water and (b) if there is only a single barrier between primary containment systems and the cooling water. Under both of the above conditions the licensee shall provide for a chloride analysis within 24 hours of the sample being taken. For all other cases, the licensee shall provide for the analysis to be completed within 4 days. The chloride analysis does not have to be done onsite.

(6) The design basis for plant equipment for reactor coolant and containment atmosphere sampling and analysis must assume that it is possible to obtain and analyze a sample without radiation exposures to any individual exceeding the criteria of GDC 19 (Appendix A, 10 CFR Part 50) (i.e., 5 rem whole body, 75 rem extremities). (Note that the design and operational review criterion was changed from the operational limits of 10 CFR Part 20 (NUREG-0578) to the GDC 19 criterion (October 30, 1979 letter from H. R. Denton to all licensees).)

(7) The analysis of primary coolant samples for boron is required for PWRs. (Note that Revision 2 of Regulatory Guide 1.97, when issued, will likely specify the need for primary coolant boron analysis capability at BWR plants.)

(8) If inline monitoring is used for any sampling and analytical capability specified herein, the licensee shall provide backup sampling through grab samples, and shall demonstrate the capability of analyzing the samples. Established planning for analysis at offsite facilities is acceptable. Equipment provided for backup sampling shall be capable of providing at least one sample per day for 7 days following onset of the accident and at least one sample per week until the accident condition no longer exists.

(9) The licensee's radiological and chemical sample analysis capability shall include provisions to:

(a) Identify and quantify the isotopes of the nuclide categories discussed above to levels corresponding to the source terms given in Regulatory Guide 1.3 or 1.4 and 1.7. Where necessary and practicable, the ability to dilute samples to provide capability for measurement and reduction of personnel exposure should be provided. Sensitivity of onsite liquid sample analysis capability should be such as to permit measurement of nuclide concentration in the range from approximately 1 μCi/g to 10 Ci/g.

(b) Restrict background levels of radiation in the radiological and chemical analysis facility from sources such that the sample analysis will provide results with an acceptably small error (approximately a factor of 2). This can be accomplished through the use of sufficient shielding around samples and outside sources, and by the use of ventilation system design which will control the presence of airborne radioactivity.

(10) Accuracy, range, and sensitivity shall be adequate to provide pertinent data to the operator in order to describe radiological and chemical status of the reactor coolant systems.

(11) In the design of the postaccident sampling and analysis capability, consideration should be given to the following items:

(a) Provisions for purging sample lines, for reducing plateout in sample lines, for minimizing sample loss or distortion, for preventing blockage of sample lines by loose material in the RCS or containment, for appropriate disposal of the samples, and for flow restrictions to limit reactor coolant loss from a rupture of the sample line. The postaccident reactor coolant and containment atmosphere samples should be representative of the reactor coolant in the core area and the containment atmosphere following a transient or accident. The sample lines should be as short as possible to minimize the volume of fluid to be taken from containment. The residues of sample collection should be returned to containment or to a closed system.

(b) The ventilation exhaust from the sampling station should be filtered with charcoal adsorbers and high-efficiency particulate air (HEPA) filters.

(c) Guidelines for analytical or instrumentation range are given below in Table II.B.3-1.

THREE HOUR POST ACCIDENT SAMPLING AND ANALYSIS REQUIREMENT

1. SUMMARY:

The capability for PAS sampling and analysis should be 3 hours from the time a decision is made to take a sample. The sample doesn't have to be taken immediately following an accident. The 3 hour criterion can start at the time when the sample is initially collected. It is acceptable to use several hours completing laboratory, countroom and PASS preparations, including instrumentation checks and sample recirculation, prior to sample collection. The 3 hour criterion applies to taking one sample and completing all of the following analyses: radionuclides and hydrogen (if containment atmosphere is sampled) or radionuclides, dissolved gases (e.g. H2) and boron (if reactor coolant is sampled). The 3 hour criterion doesn't imply that the PASS must be available 100% of the time during normal operations. The PASS is not a required safety-related system. However, PASS systems should be functional for performing its intended functions for any type of accident. Meeting PASS Program Technical Specifications (Section 6.8.5.e) will ensure that personnel are PAS trained, PAS sampling and analytical procedures are established and PAS equipment, facilities and supplies are maintained.

2. REQUIREMENTS:

- NUREG-0737, Page II.B.3.1-1 provides a requirement change that "Allows combined time of 3 hours or less for (PAS) sampling and analysis."

- NUREG-0737, Page II.B.3.1-2 states under Criterion (1) that "The licensee shall have the capability to promptly obtain reactor coolant samples and containment atmospere samples. The combined time allotted for sampling and analysis should be 3 hours or less from the time a decision is made to take a sample."

- NUREG-0737, Page II.B.3.1-2 states under Criterion (2) that "The licensee shall establish an onsite radiological and chemical analysis capability to provide, within the 3-hour time frame established above, quantification of the following:

  (a) certain radionuclides in the reactor coolant and containment atmosphere that may be indicators of the degree of core damage...;

  (b) hydrogen levels in the containment atmosphere;

  (c) dissolved gases (e.g., H2), chloride (time alloted for analysis subject to discussion below), and boron concentration of liquids."

- REGULATORY GUIDE 1.97, Rev. 2 states in footnote 17 that "The time for taking and analyzing samples should be 3 hours or less from the time the decision is made to sample, except for chloride which should be within 24 hours."

- SQN TECHNICAL SPECIFICATIONS, Section 6.8.5.e states that "A program which will ensure the capability to obtain and analyze reactor coolant, radioactive iodines and particulates in plant gaseous effluents, and containment atmosphere samples under accident conditions. The program shall include the following:

  (i) Training of personnel,
  (ii) Procedures for sampling and analysis,
  (iii) Provisions for maintenance of sampling and analysis equipment."

3. CLARIFICATION OF THE NUREG-0737 3 HOUR SAMPLING AND ANALYSIS REQUIREMENT PROVIDED BY MR. FRANK WITT (NRC NRR) IN THE OCTOBER 3 & 4, 1985 SENTRY PASS OWNER'S GROUP MEETING NOTES:

- Page 45 - The "3 hour time limit...for sampling, transport to the lab for analysis is for one sample. Either RCS sample or containment atmosphere sample. It's not for both....When does the clock start?....This sample will not be taken right after the accident happens. It may be a few hours afterward. I would expect that the technician would be getting ready to take a sample. Getting...suited up and maybe getting circulation for the system established. I would not include this in the 3 hour period. The period starts when they have actually started taking a sample."

- Page 47 - "I wouldn't (consider sample purge time as part of the 3 hour criteria). I think that's in preparation to take the sample."

- Attachment after page 61,"Counterpart Meeting Summary On PASS...April 24-26. 1984", page 14 - "The PASS is operable when all samples and measurements specified in II.B.3 can be obtained within the 3 hour time frame."

- Attachment after page 61,"Counterpart Meeting Summary On PASS...April 24-26. 1984", page 15 - "Question: Does the requirement to obtain and analyze a sample within 3 hours imply 100% availability of the PASS during normal operations and any type of potential accident? Answer: No, however, PASS systems should be functional for performing intended functions for any type of accident, when required."

- Attachment after page 61,"Counterpart Meeting Summary On PASS...April 24-26. 1984", page 18 - "Question: Does the 3 hour time constraint for sample acquisition and analysis apply to both containment air and reactor coolant or just reactor coolant? Answer: The core damage estimate procedure specifies the prime sample location which takes into account the type of accident and where the most representative sample of core conditions should be obtained. Therefore, the 3 hour time constraint for sample acquisition and analysis is for the one sample (either reactor coolant or containment atmosphere) which is most representative of core conditions. The second sample must also be taken and analyzed, but not within the 3 hour time limit."

Don E. Adams II

Don E. Adams II
March 8, 1989

U13 920707 801

July 7, 1992

J. M. Stitt, Sequoyah CA Coordinator, SB1C, SQN

BELLEFONTE NUCLEAR PLANT (BLN), SITE QUALITY, GENERIC APPLICABILITY REVIEW OF CORRECTIVE ACTION DOCUMENT.

SQSCA920004 has been reviewed for applicability to BLN. It has been placed in inactive status and added to generic collector BLPER910008. Thank you for the information. Please update TROI to reflect closure of this action.

If you have any questions call me at 574-8926.

Dennis Sanders

Dennis Sanders
Corrective Action Coordinator
OSE-1, BLN

cc: RIMS, MR 2F-C
BLN Corrective Action Files

AA000186

CG 000079

TVA 64 (05-9-65) (OP-WP-5-85)

UNITED STATES GOVERNMENT

Memorandum

TENNESSEE VALLEY AUTHORITY

T42 920807 956

TO : ☐ S. K. Fanning, PSB 1K BFN
☐ D. A. Sanders, OSE 1-BLN
☒ J. M. Stitt, SB 1C-SQN

FROM : R. M. Norton, CAQ Coordinator, NQA, Watts Bar Nuclear Plant,

DATE : 8-7-92

SUBJECT: WATTS BAR NUCLEAR PLANT (WBN) - ADVERSE CONDITION GENERIC REVIEW RESULTS

NUMBER SQSCA920004

Attached is the result(s) of WBN review for generic applicability to this site. Please have IROI updated to indicate action closure.

Ken Rankin 8-7-92
for R. M. Norton

DAK
Attachment

AA000187

CG 000080

M/1

1:A--

Subject SCAR/FIR: SQSCA920004

Assigned to WBO CEM DRM / 7-10-92 Date Due Date 8-4-92

Please review the subject adverse condition for generic applicability to Watts Bar.

PRM 8/10/92

Confirmed Applicable Yes ~~(X)~~ No (X) Other ( )

If no or other, provide justification:

WATTS BAR HAS MET THE 3 HOUR REQUIREMENT BY SETTING UP THE DIGNEY FOR BORON ANALYSIS WHEN NOTIFIED OF THE POSSIBILITY TO OBTAIN A SAMPLE. WBN AGREES WITH SQN THAT A MORE EFFICIENT METHOD WOULD BE BETTER. WBN WILL FOLLOW UP SQN CORRECTIVE ACTIONS AND IMPLEMENT PROCEDURE CHANGES AS NECESSARY.

THE CURRENT TRAINING TIMELINE AT WBN REQUIRES TRAINING AT A SPECIFIED TIME FOR ALL 16 RLA'S AS REQUIRED BY NRC AND WBN WILL CONDUCT SUCH TRAINING

WBN REQUIRES MONTHLY SAMPLES TO BE OBTAINED FROM THE HOT SAMPLE ROOM AND PASS. THESE SAMPLES ARE ANALYZED AND THE RESULTS COMPARED TO AN ACCEPTANCE CRITERIA. IF THE ACCEPTANCE CRITERIA ARE NOT MET THEN AN INVESTIGATION IS PERFORMED BY CHEMISTRY STAFF. SAMPLE ANALYSIS INCLUDE RADIOACTIVE SPECIES, HYDROGEN, pH, CHLORIDE AND ADJUSTMENTS AS REQUIRED BASED ON SQN AND WBN EXPERIENCES.

If yes, attach a copy of the resulting or previous adverse condition.
Adverse condition numbers:

Prepared By: [signature] / 7/31/92 Date

Approved By: D. R. Matthews / 7/31/92 Date

RECEIVED
AUG 4 1992
Watts Bar Nuclear Experience Review Staff

2M/47

AA000188

CG 000081

SIGNIFICANT CORRECTIVE ACTION REPORT

SCAR No. SQSCA920004-- Rev. 0

R76 9207222820

Continuation Sheet

Identify the information that is being continued on this sheet (for example: Description of Condition).

NOTE: Entries made on this sheet shall be signed and dated.

BROWNS FERRY'S GENERIC REVIEW OF SQSCA920004 Rev. 0

Response to Requirement Violated and Description of Condition:

Item #1: Browns Ferry Chemistry personnel can take and analyze any sample within three hours from the time a decision is made to sample. This is demonstrated during REP drills with the most recent being June 3, 1992.

Boron analysis requires a setup time of approximately 2 hours and an analysis time of approximately 15 minutes. Since the boron analysis setup time is in parallel with the sampling time (approximately 2 hours), the sampling and analysis can be completed within 3 hours.

Item #2: Browns Ferry's Post-Accident Sampling System (PASS) is a grab sample panel. Time-motion studies show the dose to sample and analyze all points is approximately 1.3 Rem whole body and 11.4 Rem extremities. The maximum allowable dose to any individual for PASS is 5 Rem whole body and 75 Rem extremities. With the current fourteen trained RLAs, Browns Ferry can take and analyze one sample per day for seven days and one sample per week for at least 30 weeks without exceeding the dose limits. This is more than adequate time to ensure accident conditions no longer exist.

Item #3: Browns Ferry uses 0-TI-222 on a quarterly basis to compare PASS samples to normal samples. Comparison of samples to date have met acceptance criteria.

Keith Nesmith

Keith Nesmith

2645

Ext.

7/22/92

Date