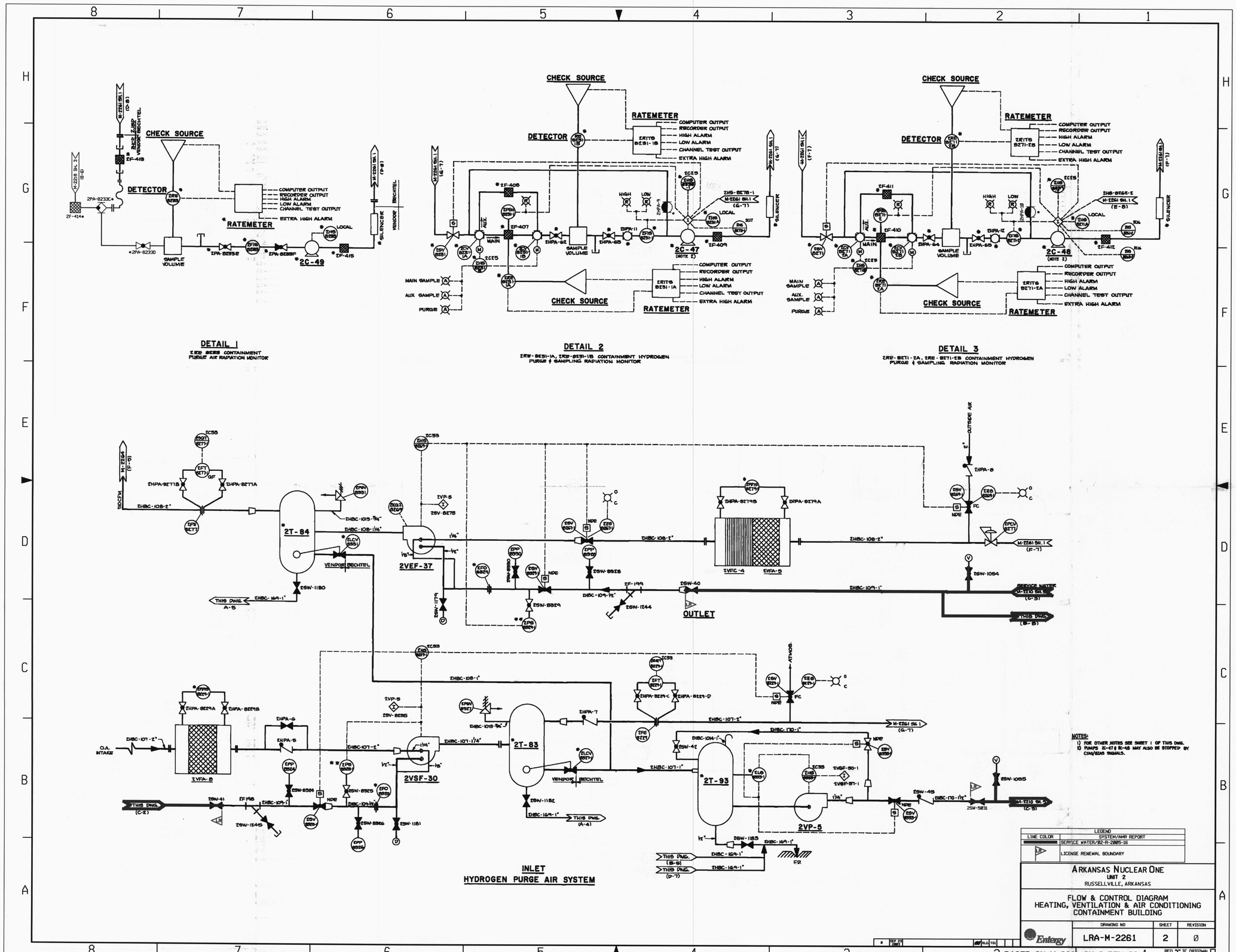

NOTES:
1) FOR OTHER NOTES SEE SHEET 1 OF THIS DWG.
2) PUMPS 2C-47 & 2C-48 MAY ALSO BE STOPPED BY CIAS/SIAS SIGNALS.

LEGEND	
LINE COLOR	SYSTEM/AMR REPORT
	SERVICE WATER/02-R-2005-16
	LICENSE RENEWAL BOUNDARY

ARKANSAS NUCLEAR ONE
UNIT 2
RUSSELLVILLE, ARKANSAS

FLOW & CONTROL DIAGRAM
HEATING, VENTILATION & AIR CONDITIONING
CONTAINMENT BUILDING

DRAWING NO	SHEET	REVISION
LRA-M-2261	2	0

Entergy

BASED ON M-2261 SH 2 REV 26

RED "X" IF ORIGINAL

D-57