REACTOR COOLANT PUMPS CROSS REFERENCE TABLE

INSTRUMENTS

2P32A	2P32B	2P32C	2P32D	SERVICE
2FE-6049	2FE-6059	2FE-6069	2FE-6079	RCP ANTI-REVERSE OIL SWITCH
2FI-6004	2FI-6014	2FI-6024	2FI-6034	RCP SEAL INJECTION FLOW IND.
2FIT-6008	2FIT-6018	2FIT-6028	2FIT-6038	CONTROLLED BLEEDOFF FLOW XMTR
2FO-6088	2FO-6098	2FO-6108	2FO-6118	CCW FLOW THROUGH L.O. COOLER
2FO-6089	2FO-6099	2FO-6109	2FO-6119	RCP MOTOR LOWER BRG. CCW FLOW
2FO-6122	2FO-6132	2FO-6142	2FO-6152	RCP MOTOR AIR COOLER CCW FLOW
2FO-6166A	2FO-6176A	2FO-6186A	2FO-6196A	RCP SUCTION PRESS. ΔP FLOW
2FO-6166B	2FO-6176B	2FO-6186B	2FO-6196B	RCP DISCHARGE PRESS. ΔP FLOW
2FS-6000	2FS-6010	2FS-6020	2FS-6030	H.P. OIL LIFT PUMP FLOW SW.
2FS-6008	2FS-6018	2FS-6028	2FS-6038	CONTROLLED BLEED OFF FLOW SW.
2FS-6048	2FS-6058	2FS-6068	2FS-6078	L.O. COOLER SUPPLY FLOW SW.
2FS-6049	2FS-6059	2FS-6069	2FS-6079	RCP ANTI-REVERSE L.O. FLOW SW.
2FS-6081	2FS-6091	2FS-6101	2FS-6111	REVERSE ROTATION FLOW SW.
2FE-6008	2FE-6018	2FE-6028	2FE-6038	CONTROLLED BLEED OFF FLOW ELEMENT
2HS-6084	2HS-6094	2HS-6104	2HS-6114	L.O. LIFT PUMPS START/STOP SW.
2LI-6002	2LI-6012	2LI-6022	2LI-6032	RCP MOTOR UPPER OIL LEVEL IND.
2LI-6041	2LI-6051	2LI-6061	2LI-6071	RCP MOTOR LOWER OIL LEVEL IND.
2LS-6002	2LS-6012	2LS-6022	2LS-6032	RCP MOTOR UPPER OIL LEVEL LOW
2LS-6003	2LS-6013	2LS-6023	2LS-6033	RCP MOTOR LOWER OIL LEVEL LOW
2LT-6002	2LT-6012	2LT-6022	2LT-6032	RCP MOTOR UPPER OIL LEVEL XMTR
2LT-6003	2LT-6013	2LT-6023	2LT-6033	RCP MOTOR LOWER OIL LEVEL XMTR
2PDI-6166	2PDI-6176	2PDI-6186	2PDI-6196	RCP DEVELOPED HEAD IND.
2PDS-6000	2PDS-6010	2PDS-6020	2PDS-6030	H.P. OIL LIFT FILTER ΔP
2PDS-6001	2PDS-6011	2PDS-6021	2PDS-6031	L.P. OIL LIFT FILTER ΔP
2PDS-6002	2PDS-6012	2PDS-6022	2PDS-6032	LIFT PUMPS SUCT. FILTER ΔP
2PDT-6166A	2PDT-6176A	2PDT-6186A	2PDT-6196A	RCP DEVELOPED HEAD XMTR.
2PDT-6166B	2PDT-6176B	2PDT-6186B	2PDT-6196B	RCP DEVELOPED HEAD XMTR.
2PI-6000	2PI-6010	2PI-6020	2PI-6030	H.P. LIFT PUMP DISCH. PRESSURE
2PSV-6000	2PSV-6010	2PSV-6020	2PSV-6030	H.P. LIFT PUMP RELIEF
2PSV-6001	2PSV-6011	2PSV-6021	2PSV-6031	L.P. LIFT PUMP RELIEF
2PSV-6167	2PSV-6177	2PSV-6187	2PSV-6197	RCP CCW THERMAL RELIEF
2PS-6000	2PS-6010	2PS-6020	2PS-6030	H.P. OIL LIFT SYSTEM PRESS. LOW
2PS-6048	2PS-6058	2PS-6068	2PS-6078	RCP OIL SYSTEM PRESS. LOW
2PT-6004	2PT-6014	2PT-6024	2PT-6034	RCP MIDDLE SEAL CAVITY PRESS. XMTR
2PT-6005	2PT-6015	2PT-6025	2PT-6035	RCP CONTR'D BLEEDOFF PRESS. XMTR
2PT-6006	2PT-6016	2PT-6026	2PT-6036	RCP UPPER SEAL CAVITY PRESS. XMTR
2SE-6120-1	2SE-6130-1	2SE-6140-1	2SE-6150-1	RCP SPEED SENSOR (CPC)
2SE-6120-2	2SE-6130-2	2SE-6140-2	2SE-6150-2	RCP SPEED SENSOR (CPC)
2SE-6120-3	2SE-6130-3	2SE-6140-3	2SE-6150-3	RCP SPEED SENSOR (CPC)
2SE-6120-4	2SE-6130-4	2SE-6140-4	2SE-6150-4	RCP SPEED SENSOR (CPC)
2SE-6121A	2SE-6131A	2SE-6141A	2SE-6151A	RCP SPEED SENSOR (COLSS)
2SE-6121B	2SE-6131B	2SE-6141B	2SE-6151B	RCP SPEED SENSOR (COLSS)
2ST-6120-1	2ST-6130-1	2ST-6140-1	2ST-6150-1	RCP SPEED XMTR. (CPC)
2ST-6120-2	2ST-6130-2	2ST-6140-2	2ST-6150-2	RCP SPEED XMTR. (CPC)
2ST-6120-3	2ST-6130-3	2ST-6140-3	2ST-6150-3	RCP SPEED XMTR. (CPC)
2ST-6120-4	2ST-6130-4	2ST-6140-4	2ST-6150-4	RCP SPEED XMTR. (CPC)
2ST-6121A	2ST-6131A	2ST-6141A	2ST-6151A	RCP SPEED XMTR. (COLSS)
2ST-6121B	2ST-6131B	2ST-6141B	2ST-6151B	RCP SPEED XMTR. (COLSS)
2SY-6120-1				RCP SPEED SIGNAL CONVERTER
2SY-6120-2				RCP SPEED SIGNAL CONVERTER
2SY-6120-3				RCP SPEED SIGNAL CONVERTER
2SY-6120-4				RCP SPEED SIGNAL CONVERTER
2TE-6005 ▲	2TE-6015 ▲	2TE-6025 ▲	2TE-6035 ▲	RCP MOTOR LOWER GUIDE BRG. TEMP.
2TE-6007 ▲	2TE-6017 ▲	2TE-6027 ▲	2TE-6037 ▲	RCP MOTOR UPPER GUIDE BRG. TEMP.
2TE-6008 ▲	2TE-6018 ▲	2TE-6028 ▲	2TE-6038 ▲	RCP CONTROLLED BLEED OFF TEMP.
2TE-6009 ▲	2TE-6019 ▲	2TE-6029 ▲	2TE-6039 ▲	RCP SEAL TEMP
2TE-6040 ▲	2TE-6050 ▲	2TE-6060 ▲	2TE-6070 ▲	RCP MOTOR STATOR WINDING TEMP.
2TE-6040A ▲	2TE-6050A ▲	2TE-6060A ▲	2TE-6070A ▲	RCP MOTOR STATOR WINDING TEMP.
2TE-6041 ▲	2TE-6051 ▲	2TE-6061 ▲	2TE-6071 ▲	RCP MOTOR LOWER BRG. OIL TEMP.
2TE-6045 ▲	2TE-6055 ▲	2TE-6065 ▲	2TE-6075 ▲	RCP MOTOR DN. THRUST BRG. TEMP.
2TE-6047 ▲	2TE-6057 ▲	2TE-6067 ▲	2TE-6077 ▲	RCP MOTOR L.O. TEMP. BEFORE COOL.
2TE-6048 ▲	2TE-6058 ▲	2TE-6068 ▲	2TE-6078 ▲	RCP MOTOR L.O. TEMP. AFTER COOL.
2TE-6049 ▲	2TE-6059 ▲	2TE-6069 ▲	2TE-6079 ▲	RCP ANTI. REVERSE DEVICE L.O. TEMP.
2TE-6080 ▲	2TE-6090 ▲	2TE-6100 ▲	2TE-6110 ▲	RCP MOTOR UP THRUST BRG. TEMP.
2TE-6085	2TE-6095	2TE-6105	2TE-6115	RCP SEAL WATER EXIT TEMP
2TIS-6040	2TIS-6050	2TIS-6060	2TIS-6070	RCP MOTOR STATOR WIND. TEMP. SW.
2TIS-6043	2TIS-6053	2TIS-6063	2TIS-6073	RCP MOTOR DN. THRUST BRG. TEMP. SW.
2TIS-6080	2TIS-6090	2TIS-6100	2TIS-6110	RCP MOTOR UP THRUST BRG. TEMP. SW.
2TS-6085	2TS-6095	2TS-6105	2TS-6115	RCP SEAL WATER EXIT TEMP SW.
2URS-6004	2URS-6014	2URS-6024	2URS-6034	RCP SEAL MONITOR/RECORDER
2VBE-6044A	2VBE-6054A	2VBE-6064A	2VBE-6074A	UPPER MOTOR BEARING VIBRATION
2VBE-6044B	2VBE-6054B	2VBE-6064B	2VBE-6074B	UPPER MOTOR BEARING VIBRATION
2VBT-6044A	2VBT-6054A	2VBT-6064A	2VBT-6074A	UPPER MOTOR BEARING VIBRATION
2VBT-6044B	2VBT-6054B	2VBT-6064B	2VBT-6074B	UPPER MOTOR BEARING VIBRATION
2VBIY-6044	2VBIY-6054	2VBIY-6064	2VBIY-6074	UPPER MOTOR BEARING VIBRATION
2VBE-6045A	2VBE-6055A	2VBE-6065A	2VBE-6075A	LOWER MOTOR BEARING VIBRATION
2VBE-6045B	2VBE-6055B	2VBE-6065B	2VBE-6075B	LOWER MOTOR BEARING VIBRATION
2VBT-6045A	2VBT-6055A	2VBT-6065A	2VBT-6075A	LOWER MOTOR BEARING VIBRATION
2VBT-6045B	2VBT-6055B	2VBT-6065B	2VBT-6075B	LOWER MOTOR BEARING VIBRATION
2VBIY-6045	2VBIY-6055	2VBIY-6065	2VBIY-6075	LOWER MOTOR BEARING VIBRATION
2VBE-6046A	2VBE-6056A	2VBE-6066A	2VBE-6076A	PUMP SHAFT VIBRATION
2VBE-6046B	2VBE-6056B	2VBE-6066B	2VBE-6076B	PUMP SHAFT VIBRATION
2VBT-6046A	2VBT-6056A	2VBT-6066A	2VBT-6076A	PUMP SHAFT VIBRATION
2VBT-6046B	2VBT-6056B	2VBT-6066B	2VBT-6076B	PUMP SHAFT VIBRATION
2VBIY-6046	2VBIY-6056	2VBIY-6066	2VBIY-6076	PUMP SHAFT VIBRATION
2VBPE-6046A	2VBPE-6056A	2VBPE-6066A	2VBPE-6076A	KEYPHASE
2VBPE-6046B	2VBPE-6056B	2VBPE-6066B	2VBPE-6076B	KEYPHASE
2VBPT-6046A	2VBPT-6056A	2VBPT-6066A	2VBPT-6076A	KEYPHASE
2VBPT-6046B	2VBPT-6056B	2VBPT-6066B	2VBPT-6076B	KEYPHASE
2ZE-6046	2ZE-6056	2ZE-6066	2ZE-6076	AXIAL POSITION
2ZT-6046	2ZT-6056	2ZT-6066	2ZE-6076	AXIAL POSITION
2ZIY-6046	2ZIY-6056	2ZIY-6066	2ZIY-6076	AXIAL POSITION
	2PWR-6056		2PWR-6076	KEYPHASE

VALVES

2P32A	2P32B	2P32C	2P32D	SERVICE
2CCW-39A	2CCW-39B	2CCW-39C	2CCW-39D	CCW SUPPLY TO RCP
2CCW-40A	2CCW-40B	2CCW-40C	2CCW-40D	CCW RETURN FROM RCP SEAL
2RCP-1A	2RCP-1B	2RCP-1C	2RCP-1D	RCP CASING FLANGE LEAK-OFF
2RCP-10A	2RCP-10B	2RCP-10C	2RCP-10D	L.P. LIFT PUMP DISCH. CHECK
2RCP-1000A	2RCP-1000B	2RCP-1000C	2RCP-1000D	UPPER SEAL CAVITY VENT
2RCP-1001A	2RCP-1001B	2RCP-1001C	2RCP-1001D	UPPER SEAL CAVITY VENT
2RCP-1002A	2RCP-1002B	2RCP-1002C	2RCP-1002D	MIDDLE SEAL CAVITY VENT
2RCP-1003A	2RCP-1003B	2RCP-1003C	2RCP-1003D	MIDDLE SEAL CAVITY VENT
2RCP-1004A	2RCP-1004B	2RCP-1004C	2RCP-1004D	LOWER SEAL CAVITY VENT
2RCP-1005A	2RCP-1005B	2RCP-1005C	2RCP-1005D	LOWER SEAL CAVITY VENT
2RCP-1006A	2RCP-1006B	2RCP-1006C	2RCP-1006D	CONTROLLED BLEEDOFF VENT
2RCP-1007A	2RCP-1007B	2RCP-1007C	2RCP-1007D	CONTROLLED BLEED OFF VENT
2RCP-1008A	2RCP-1008B	2RCP-1008C	2RCP-1008D	PUMP CASING FLANGE LEAKOFF VT.
2RCP-1009A	2RCP-1009B	2RCP-1009C	2RCP-1009D	PUMP CASING FLANGE LEAKOFF VT.
2RCP-11A	2RCP-11B	2RCP-11C	2RCP-11D	UPPER BRG. L.O. OUTLET CHECK
2RCP-12A	2RCP-12B	2RCP-12C	2RCP-12D	UPPER BRG. L.O. OUTLET CHECK
2RCP-13A	2RCP-13B	2RCP-13C	2RCP-13D	UPPER BRG. L.O. OUTLET CHECK
2RCP-14A	2RCP-14B	2RCP-14C	2RCP-14D	UPPER BRG. L.O. OUTLET CHECK
2RCP-15A	2RCP-15B	2RCP-15C	2RCP-15D	L.O. COOLER OIL INLET ISOL.
2RCP-16A	2RCP-16B	2RCP-16C	2RCP-16D	L.O. TO ANTI-REVERSE DEVICE
2RCP-17A	2RCP-17B	2RCP-17C	2RCP-17D	L.O. TO ANTI-REVERSE DEVICE
2RCP-18A	2RCP-18B	2RCP-18C	2RCP-18D	L.O. COOLER OIL OUTLET ISOL.
2RCP-19A	2RCP-19B	2RCP-19C	2RCP-19D	OIL LIFT PUMPS SUCTION ISOL.
2RCP-2A	2RCP-2B	2RCP-2C	2RCP-2D	RCP CASING FLANGE LEAKOFF ISO.
2RCP-3A	2RCP-3B	2RCP-3C	2RCP-3D	CONTROLLED BLEEDOFF ISOL.
2RCP-46A	2RCP-46B	2RCP-46C	2RCP-46D	CONTROLLED BLEEDOFF DRAIN
2RCP-47A	2RCP-47B	2RCP-47C	2RCP-47D	CONTROLLED BLEEDOFF DRAIN
2RCP-56A	2RCP-56B	2RCP-56C	2RCP-56D	LOWER SEAL CAVITY INJ. ISOL.
2RCP-57A	2RCP-57B	2RCP-57C	2RCP-57D	LOWER SEAL CAVITY INJ. ISOL.
2RCP-58A	2RCP-58B	2RCP-58C	2RCP-58D	SEAL INJECTION FLOW IND. ISOL.
2RCP-59A	2RCP-59B	2RCP-59C	2RCP-59D	SEAL INJECTION FLOW IND. ISOL.
2RCP-60A	2RCP-60B	2RCP-60C	2RCP-60D	SEAL INJECTION FLOW IND. BYPASS
2RCP-6002	2RCP-6012	2RCP-6022	2RCP-6032	UPPER L.O. LEVEL XMTR. ISOL.
2RCP-6003	2RCP-6013	2RCP-6023	2RCP-6033	LOWER L.O. LEVEL XMTR. ISOL.
2RCP-6004A	2RCP-6014A	2RCP-6024A	2RCP-6034A	MIDDLE SEAL CAVITY PT. ISOL.
2RCP-6004B	2RCP-6014B	2RCP-6024B	2RCP-6034B	MIDDLE SEAL CAVITY PT. ISOL.
2RCP-6005A	2RCP-6015A	2RCP-6025A	2RCP-6035A	CONTROLLED BLEEDOFF PT. ISOL.
2RCP-6005B	2RCP-6015B	2RCP-6025B	2RCP-6035B	CONTROLLED BLEED OFF PT. ISOL.
2RCP-6006A	2RCP-6016A	2RCP-6026A	2RCP-6036A	UPPER SEAL CAVITY PT. ISOL.
2RCP-6006B	2RCP-6016B	2RCP-6026B	2RCP-6036B	UPPER SEAL CAVITY PT. ISOL.
2RCP-6008-1	2RCP-6018-1	2RCP-6028-1	2RCP-6038-1	CONTR. BLEED OFF FLOW XMTR. ISOL.
2RCP-6008-2	2RCP-6018-2	2RCP-6028-2	2RCP-6038-2	CONTR. BLEED OFF FLOW XMTR. ISOL.
2RCP-6008-3	2RCP-6018-3	2RCP-6028-3	2RCP-6038-3	CONTR. BLEED OFF FLOW XMTR. BYPASS
2RCP-6166A	2RCP-6176A	2RCP-6186A	2RCP-6196A	RCP SUCTION PRESSURE ISOLATION
2RCP-6166B	2RCP-6176B	2RCP-6186B	2RCP-6196B	RCP SUCTION PRESSURE ISOLATION
2RCP-6166C	2RCP-6176C	2RCP-6186C	2RCP-6196C	RCP DISCHARGE PRESSURE ISOL.
2RCP-6166D	2RCP-6176D	2RCP-6186D	2RCP-6196D	RCP DISCHARGE PRESSURE ISOL.
2RCP-7A	2RCP-7B	2RCP-7C	2RCP-7D	H.P. LIFT PUMP DISCH. CHECK
2RCP-8A	2RCP-8B	2RCP-8C	2RCP-8D	H.P. L.O. SUPPLY CHECK
2RCP-9A	2RCP-9B	2RCP-9C	2RCP-9D	H.P. L.O. SUPPLY CHECK
2RCP-6008-1A	2RCP-6018-1A	2RCP-6028-1A	2RCP-6038-1A	CONTROLLED BLEED OFF FLOW XMTR. ISOL.
2RCP-6008-2A	2RCP-6018-2A	2RCP-6028-2A	2RCP-6038-2A	CONTROLLED BLEED OFF FLOW XMTR. ISOL.

FLEXIBLE HOSES

2P32A	2P32B	2P32C	2P32D	SERVICE
2XJA-31A	2XJA-31B	2XJA-31C	2XJA-31D	UPPER SEAL CAVITY PT.
2XJA-32A	2XJA-32B	2XJA-32C	2XJA-32D	MIDDLE SEAL CAVITY PT.
2XJA-33A	2XJA-33B	2XJA-33C	2XJA-33D	LOWER SEAL CAVITY PT.

EQUIPMENT

2P32A	2P32B	2P32C	2P32D	SERVICE
2E25A	2E25B	2E25C	2E25D	LUBE OIL COOLER
2E41A	2E41B	2E41C	2E41D	MOTOR AIR COOLER
2F390A	2F390B	2F390C	2F390D	H.P. OIL LIFT FILTER
2F391A	2F391B	2F391C	2F391D	L.P. OIL LIFT FILTER
2F392A	2F392B	2F392C	2F392D	OIL LIFT PUMPS SUCT. FILTER
2F393A	2F393B	2F393C	2F393D	L.O. COOLER OIL STRAINER
2P63A1	2P63B1	2P63C1	2P63D1	L.P. OIL LIFT PUMP
2P63A2	2P63B2	2P63C2	2P63D2	H.P. OIL LIFT PUMP
2PM63A	2PM63B	2PM63C	2PM63D	COMMON OIL LIFT PUMP MOTOR

PIPE LINE CLASS AND NUMBERS

2P32A	2P32B	2P32C	2P32D	SERVICE
2CCB-48	2CCB-49	2CCB-50	2CCB-51	CONTROLLED BLEED OFF
2CCB-56	2CCB-57	2CCB-58	2CCB-59	RCP DISCH. PRESS. TAP
2CCB-60	2CCB-61	2CCB-62	2CCB-63	RCP SUCT. PRESS. TAP
2CCB-64	2CCB-65	2CCB-66	2CCB-67	RCP FLANG GASKET LEAKOFF
2CCC-6	2CCC-12	2CCC-13	2CCC-14	UPPER SEAL CAVITY PT.
2CCC-7	2CCC-15	2CCC-16	2CCC-17	MIDDLE SEAL CAVITY PT.
2CCC-8	2CCC-18	2CCC-19	2CCC-20	LOWER SEAL CAVITY PT.
2CCC-10	2CCC-21	2CCC-22	2CCC-23	CCW SUPPLY TO RCP
2CCC-11	2CCC-24	2CCC-25	2CCC-26	CCW RETURN FROM RCP
2HBD-696	2HBD-694	2HBD-693	2HBD-692	CCW THERMAL RELIEF (RCP)
2HBD-865	2HBD-866	2HBD-867	2HBD-868	RCP SEAL VENT DRAIN OFF
2HCC-67	2HCC-78	2HCC-79	2HCC-80	RCP FLANGE GASKET LEAKOFF
2HCC-81	2HCC-82	2HCC-17	2HCC-83	RCP SEAL LEAK OFF
2JBD-117	2JBD-234	2JBD-238	2JBD-242	CCW SUPPLY TO RCP
2JBD-118	2JBD-235	2JBD-239	2JBD-243	CCW SUPPLY TO RCP MOTOR
2JBD-119	2JBD-236	2JBD-240	2JBD-244	CCW RETURN FROM RCP
2JBD-120	2JBD-237	2JBD-241	2JBD-245	CCW RETURN FROM RCP MOTOR
2JBD-763	2JBD-764	2JBD-765	2JBD-246	DRIVER MOUNT GRAVITY DRAIN

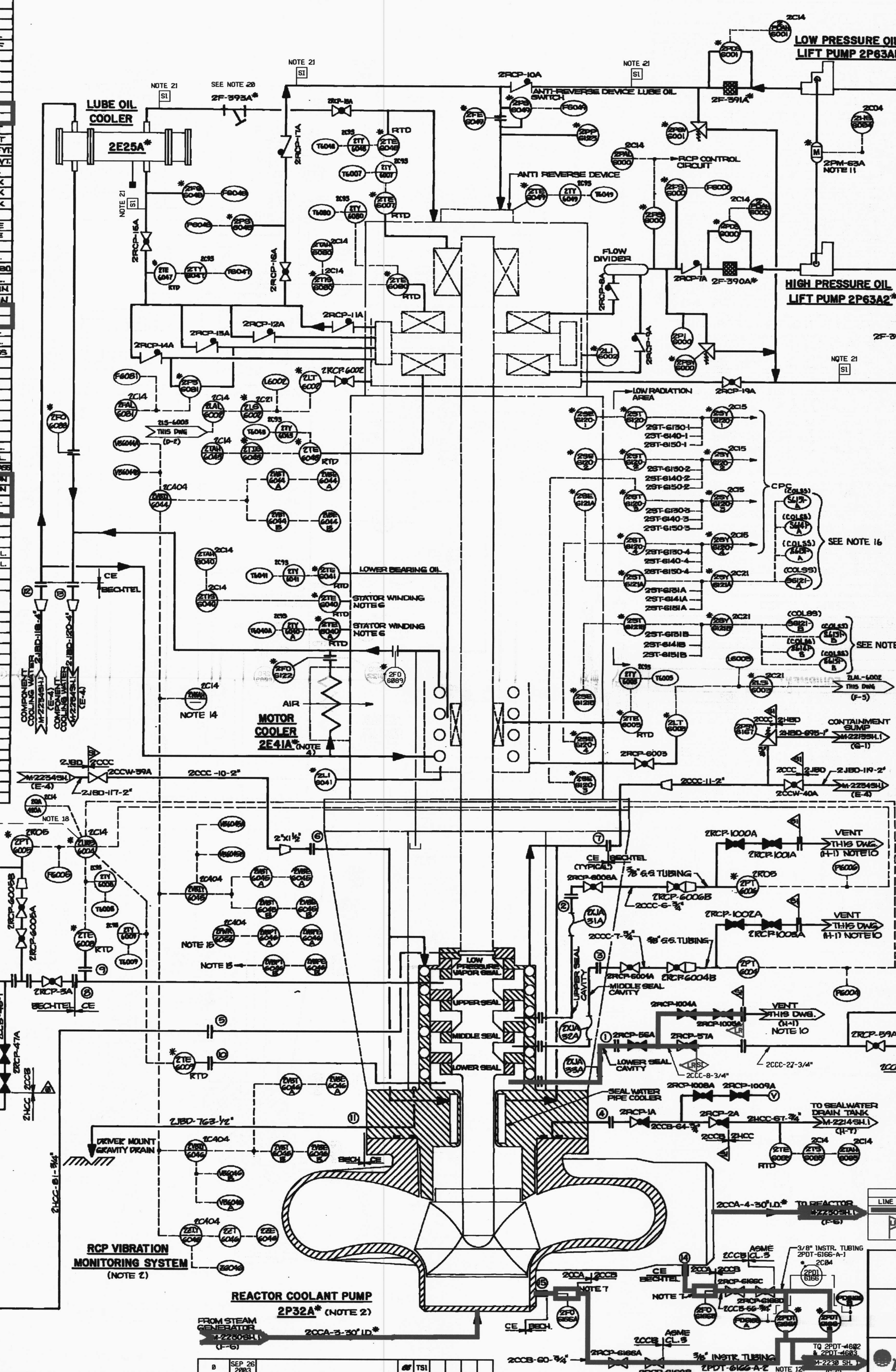

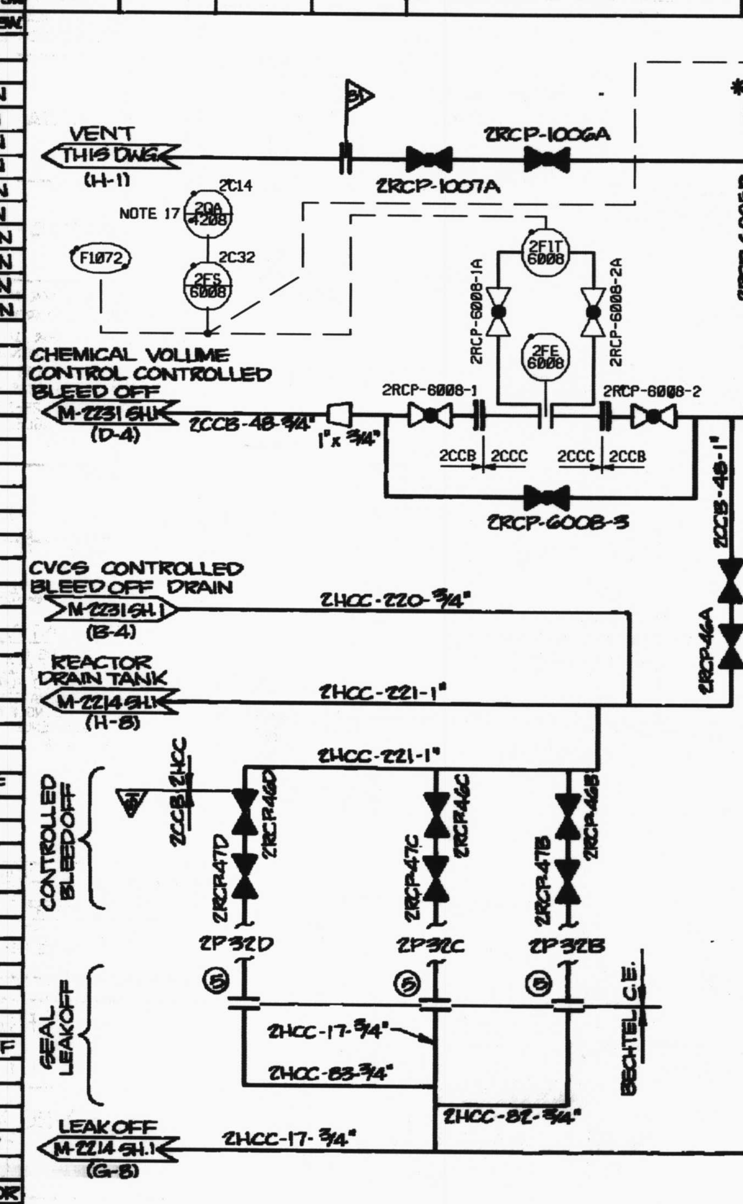

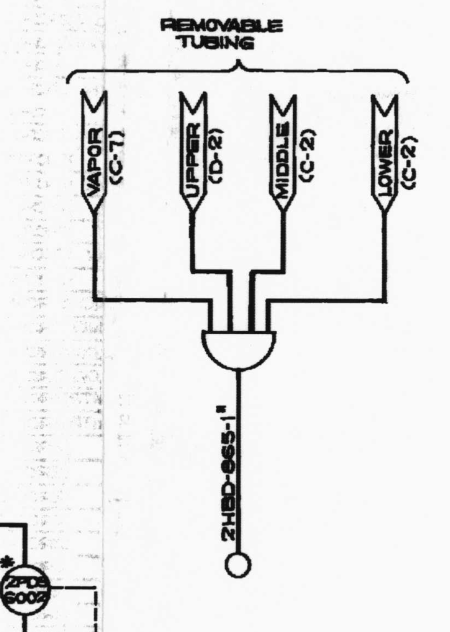

NOTES:

1. REFERENCE C.E. DWG. NO. E-6370-210-111.
2. THIS DWG. IS TYPICAL OF FOUR REACTOR COOLANT PUMPS, 2P32A, B, C, D.
3. THE INSTRUMENT & ASSOCIATED MANUAL RT. VALVE NOs SHOWN ARE FOR 2P32A. INSTRUMENT & RT. VALVE NOs FOR 2P32B, C, D FOLLOW CONSECUTIVELY FROM THE INDICATED NO. BY INCREMENTS OF TEN (SEE CROSS REFERENCE CHART.)
4. INTEGRAL MOTOR AIR COOLING COILS.
5. RACK NO. 2R05 IS FOR PUMP 2P32A INSTRUMENTS. RACK NOs FOR PUMPS 2P32B, C, D ARE 2R06, 2R19 AND 2R20 RESPECTIVELY.
6. ONE OF SIX STATOR WINDING TEMPERATURE ELEMENTS CHOSEN DURING PUMP TESTS WILL BE CONNECTED TO THE PLANT COMPUTER AND ONE WILL BE INDICATED AND ALARMED ON PANEL 2C14.
7. FLOW LIMITING ORIFICES TO BE 3/16" DIAMETER (+1/32-0) x 1 1/8" LONG (+1/8-1/8)
8. WITH THE EXCEPTION OF INSTRUMENT ROOT VALVES, MANUAL VALVE NOs SHOWN ARE FOR PUMP 2P32A & AS SUCH ALL HAVE SUFFIX A. (SEE CROSS REFERENCE CHART.)
9. FLANGES ONLY TYPICAL FOR LINE 2CCB-48-3/4"
10. VENT SIZES ARE AS FOLLOWS:

PUMP	SEAL CAVITY UPPER	SEAL CAVITY MIDDLE	SEAL CAVITY LOWER
2P32A	1/2"	1/2"	3/4"
2P32B	1/2"	3/4"	3/4"
2P32C	3/4"	3/4"	3/4"
2P32D	3/4"	3/4"	3/4"

11. A COMMON MOTOR IS USED TO DRIVE THE LOW PRESSURE AND HIGH PRESSURE OIL LIFT PUMPS.
12. CONNECTION FOR 2PDT-4602 IS FROM 2P32A AND FOR 2PDT-4603 IS FROM 2P32B ONLY. THIS LINE DOES NOT EXIST ON 2P32C & 2P32D.
13. THIS CHANNEL OF KEYPHASE MEASUREMENT IS AN INSTALLED SPARE WHICH IS WIRED OUT TO 2C404.
14. ALARMS FOR ALL RCP VIBRATION MONITORS ARE REFLASHED AT 2VBAY-6076 TO DRIVE A SINGULAR ANNUNCIATOR WINDOW 2VBAH-6076.
15. KEYPHASOR'S FOR 2P32A & B CONNECT TO 2PWR-6056. KEYPHASOR'S FOR 2P32C & D CONNECT TO 2PWR-6076
16.

	COMPUTER POINT	RCP PUMP
2SY-6121A	S-6121A	A
	S-6131A	B
	S-6141A	C
	S-6151A	D
2SY-6121B	S-6121B	A
	S-6131B	B
	S-6141B	C
	S-6151B	D

17. ALARMS FOR ALL RCP BLEEDOFF FLOW MONITORS ARE REFLASHED AT 2K420B TO DRIVE A SINGULAR ANNUNCIATOR WINDOW.
18. ALARMS FOR ALL RCP BLEEDOFF TEMP MONITORS ARE REFLASHED AT 2K420A TO DRIVE A SINGULAR ANNUNCIATOR WINDOW.
19. RTD's SHOWN IN THE CROSS REF. AS 2TE-___ ▲, HAVE BRIDGES INCLUDED THAT ARE NOT SHOWN IN THE CROSS REF. THE BRIDGES (2TY-___) HAVE THE SAME NUMBER AS THE RTD's.
20. STRAINER 2F-393A IS A DUPLEX STRAINER. STRAINERS 2F-393B, C & D ARE SINGLE.

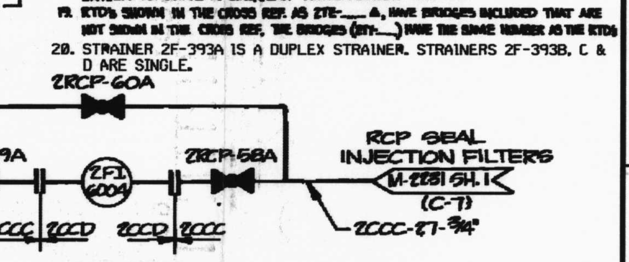

NOTES (CONT'D):

21. THE LUBE OIL DISTRIBUTION PIPING INTEGRITY MUST BE MAINTAINED FOR FIRE HAZARD CONCERNS, AND HAS BEEN EVALUATED AND QUALIFIED FOR SAFE SHUTDOWN EARTHQUAKE (SSE) SURVIVABILITY. CONSIDERATION MUST BE GIVEN TO ACTIVITIES THAT MAY CHANGE THE PIPING CONFIGURATION OR IMPACT THE SEISMIC QUALIFICATION. DESIGN ENGINEERING MAY BE CONTACTED FOR ASSISTANCE IF DESIRED.

LEGEND	
LINE COLOR	SYSTEM/AMR REPORT
(line)	REACTOR COOLANT/02-R-2005-01
(LR flag)	LICENSE RENEWAL BOUNDARY

0	SEP 26 2003	TSI

ARKANSAS NUCLEAR ONE
UNIT 2
RUSSELLVILLE, ARKANSAS

PIPING & INSTRUMENT DIAGRAM
REACTOR COOLANT
PUMP CONNECTIONS

Entergy

DRAWING NO	SHEET	REVISION
LRA-M-2238	1	0

BASED ON M-2238 SH 1 REV 52

RED "X" IF ORIGINAL ☐

D-46