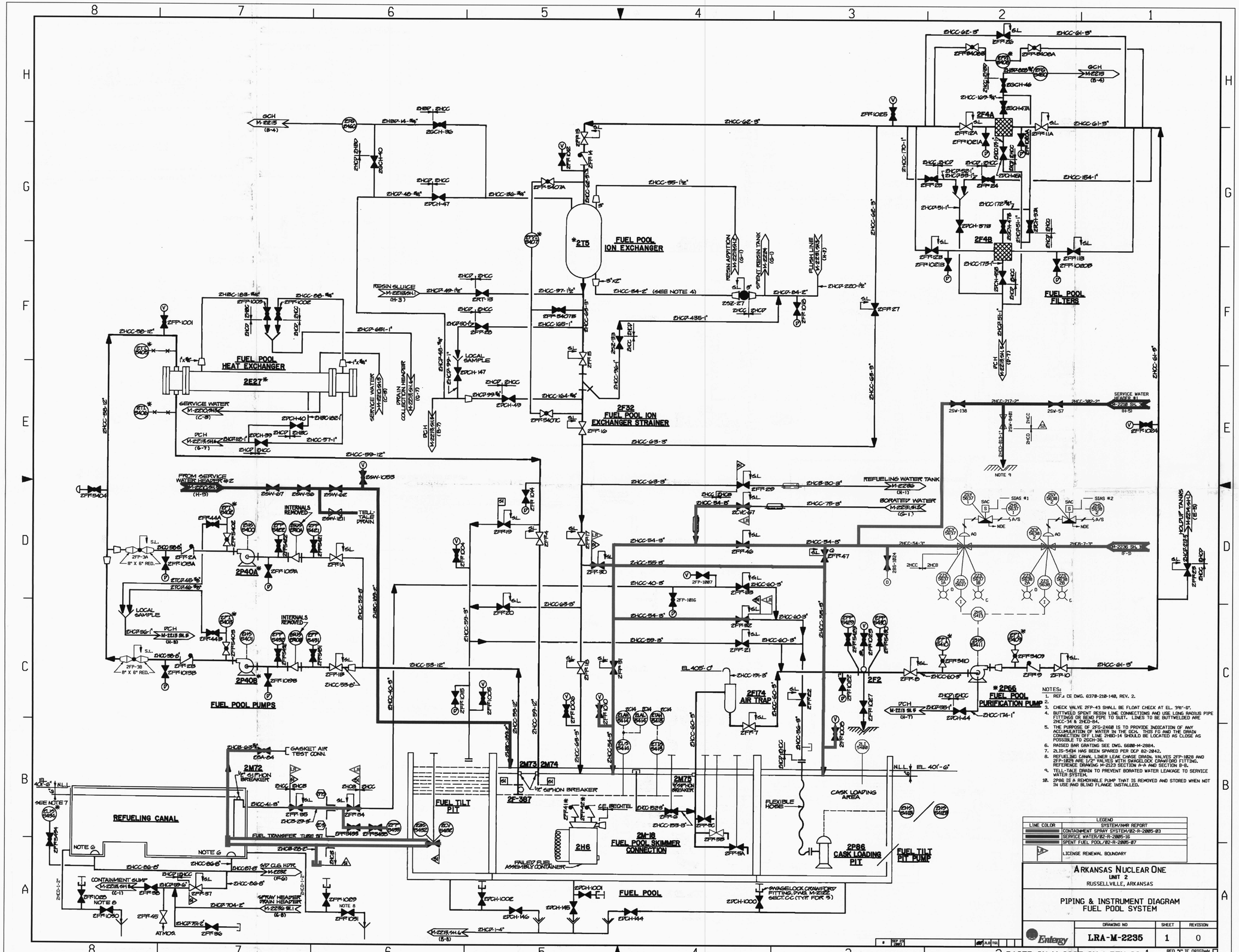


NOTES:

1. REF.: CE DWG. 6370-210-140, REV. 2.
2.
3. CHECK VALVE 2FP-43 SHALL BE FLOAT CHECK AT EL. 391'-6".
4. BUTTWELD SPENT RESIN LINE CONNECTIONS AND USE LONG RADIUS PIPE FITTINGS OR BEND PIPE TO SUIT. LINES TO BE BUTTWELDED ARE 2HCC-34 & 2HCD-84.
5. THE PURPOSE OF 2FG-2460 IS TO PROVIDE INDICATION OF ANY ACCUMULATION OF WATER IN THE GCH. THIS FG AND THE DRAIN CONNECTION OFF LINE 2HBD-14 SHOULD BE LOCATED AS CLOSE AS POSSIBLE TO 2GCH-36.
6. RAISED BAR GRATING SEE DWG. 6600-M-2884.
7. 2LIS-5434 HAS BEEN SPARED PER DCP 82-2042.
8. REFUELING CANAL LINER LEAK CHASE DRAIN. VALVES 2FP-1028 AND 2FP-1029 ARE 1/2" VALVES WITH SWAGELOCK CRAWFORD FITTING. REFERENCE DRAWING M-2123 SECTION A-A AND SECTION B-B.
9. TELL-TALE DRAIN TO PREVENT BORATED WATER LEAKAGE TO SERVICE WATER SYSTEM.
10. 2P86 IS A REMOVABLE PUMP THAT IS REMOVED AND STORED WHEN NOT IN USE AND BLIND FLANGE INSTALLED.

LEGEND

| LINE COLOR | SYSTEM/AMR REPORT |
|---|---|
| | CONTAINMENT SPRAY SYSTEM/02-R-2005-03 |
| | SERVICE WATER/02-R-2005-16 |
| | SPENT FUEL POOL/02-R-2005-07 |
| | LICENSE RENEWAL BOUNDARY |

ARKANSAS NUCLEAR ONE
UNIT 2
RUSSELLVILLE, ARKANSAS

PIPING & INSTRUMENT DIAGRAM
FUEL POOL SYSTEM

| DRAWING NO | SHEET | REVISION |
|---|---|---|
| LRA-M-2235 | 1 | 0 |

Entergy

BASED ON M-2235 SH 1 REV 66

RED "X" IF ORIGINAL

D-43