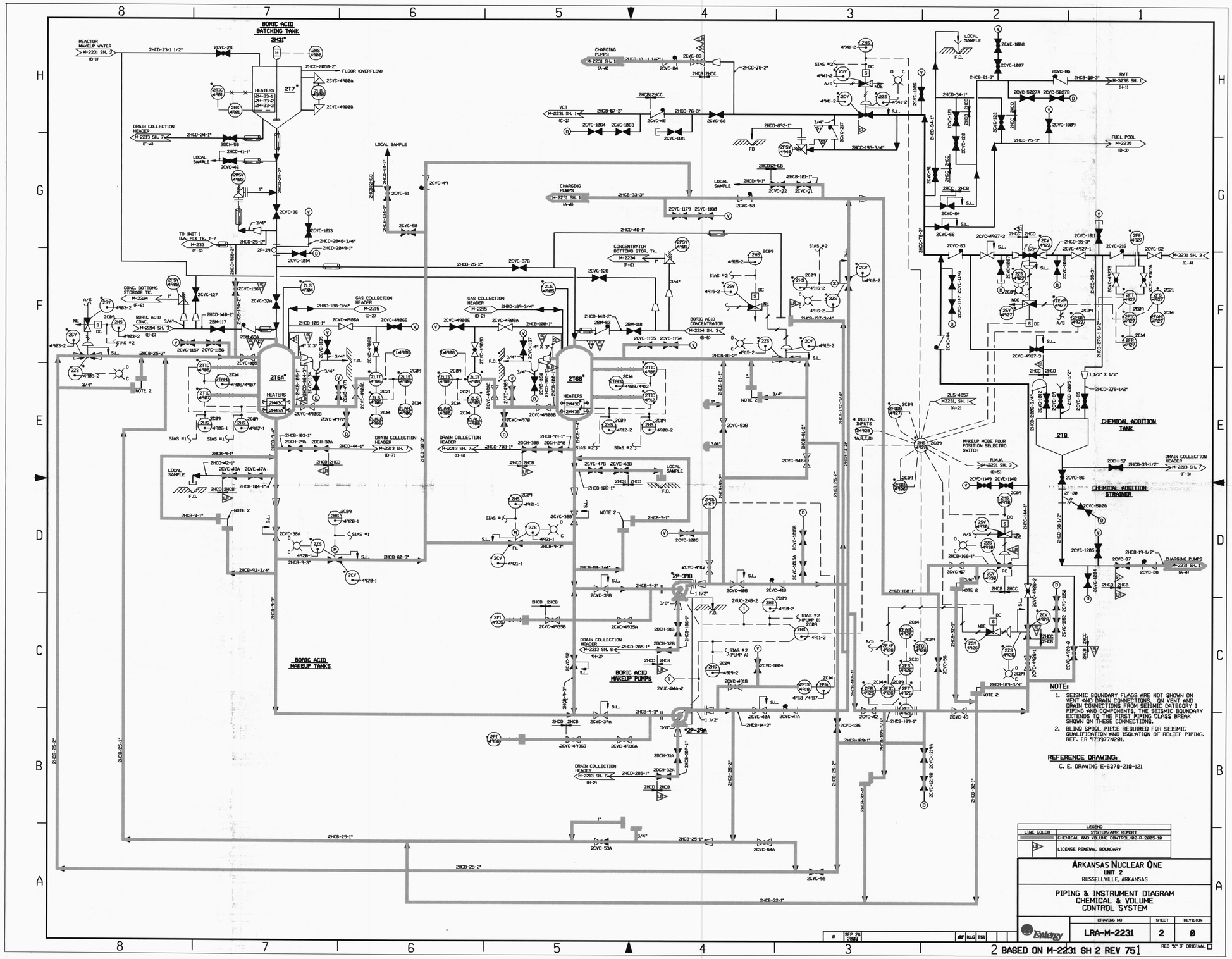
BORIC ACID BATCHING TANK
CHEMICAL ADDITION TANK
CHEMICAL ADDITION STRAINER
BORIC ACID MAKEUP TANKS
BORIC ACID MAKEUP PUMPS
REACTOR MAKEUP WATER
DRAIN COLLECTION HEADER
GAS COLLECTION HEADER
CONCENTRATOR BOTTOMS STOR. TK.
BORIC ACID CONCENTRATOR
CHARGING PUMPS
FUEL POOL
LOCAL SAMPLE
MAKEUP MODE FOUR POSITION SELECTRO SWITCH
DIGITAL INPUTS
NOTE 2
NOTE:
1. SEISMIC BOUNDARY FLAGS ARE NOT SHOWN ON VENT AND DRAIN CONNECTIONS. ON VENT AND DRAIN CONNECTIONS FROM SEISMIC CATEGORY I PIPING AND COMPONENTS, THE SEISMIC BOUNDARY EXTENDS TO THE FIRST PIPING CLASS BREAK SHOWN ON THESE CONNECTIONS.
2. BLIND SPOOL PIECE REQUIRED FOR SEISMIC QUALIFICATION AND ISOLATION OF RELIEF PIPING. REF. ER 973977N201.
REFERENCE DRAWING:
C. E. DRAWING E-6370-210-121
LEGEND
LINE COLOR
SYSTEM/AMR REPORT
CHEMICAL AND VOLUME CONTROL/02-R-2005-10
LICENSE RENEWAL BOUNDARY
ARKANSAS NUCLEAR ONE
UNIT 2
RUSSELLVILLE, ARKANSAS
PIPING & INSTRUMENT DIAGRAM
CHEMICAL & VOLUME
CONTROL SYSTEM
DRAWING NO
SHEET
REVISION
LRA-M-2231
2
0
Entergy
SEP 26 2003
KLG
TSI
RED "X" IF ORIGINAL
BASED ON M-2231 SH 2 REV 75

D-39