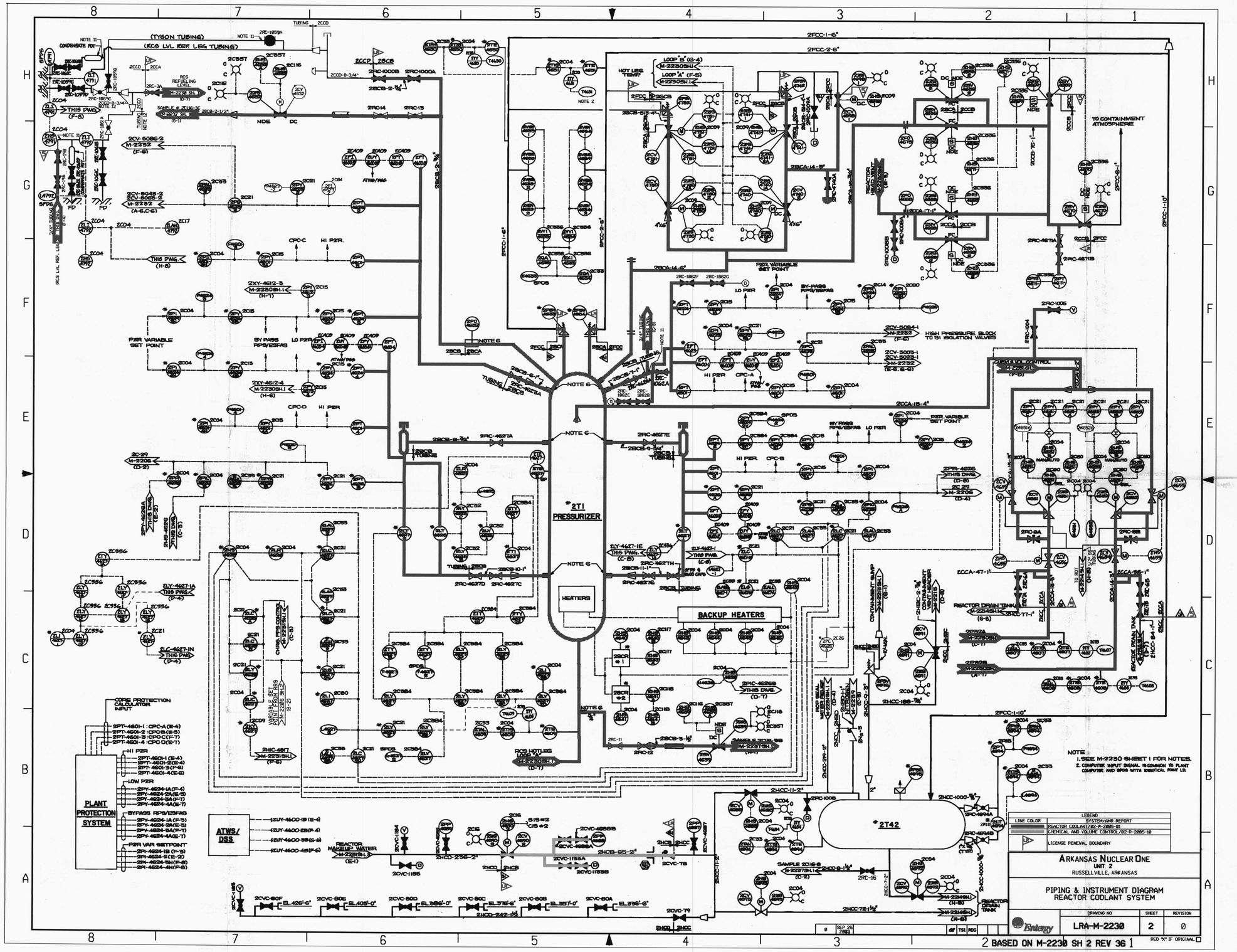
*2T1
PRESSURIZER
HEATERS
BACKUP HEATERS
*2T42
PLANT PROTECTION SYSTEM
ATWS/DSS
TO CONTAINMENT ATMOSPHERE
HIGH PRESSURE BLOCK TO SI ISOLATION VALVES
P2R VARIABLE SET POINT
BY PASS RPS/ESFAS
LO P2R
HI P2R
CPC-C
CPC-D
CPC-A
CPC-B
NOTE 6
NOTE
1. SEE M-2230 SHEET 1 FOR NOTES.
2. COMPUTER INPUT SIGNAL IS COMMON TO PLANT COMPUTER AND SPDS WITH IDENTICAL POINT ID.
LEGEND
SYSTEM/ANR REPORT
LINE COLOR
REACTOR COOLANT/B2-R-2005-B1
CHEMICAL AND VOLUME CONTROL/B2-R-2005-1B
LICENSE REVIEW BOUNDARY
ARKANSAS NUCLEAR ONE
UNIT 2
RUSSELLVILLE, ARKANSAS
PIPING & INSTRUMENT DIAGRAM
REACTOR COOLANT SYSTEM
DRAWING NO
SHEET
REVISION
LRA-M-2230
2
0
Entergy
BASED ON M-2230 SH 2 REV 36

D-37