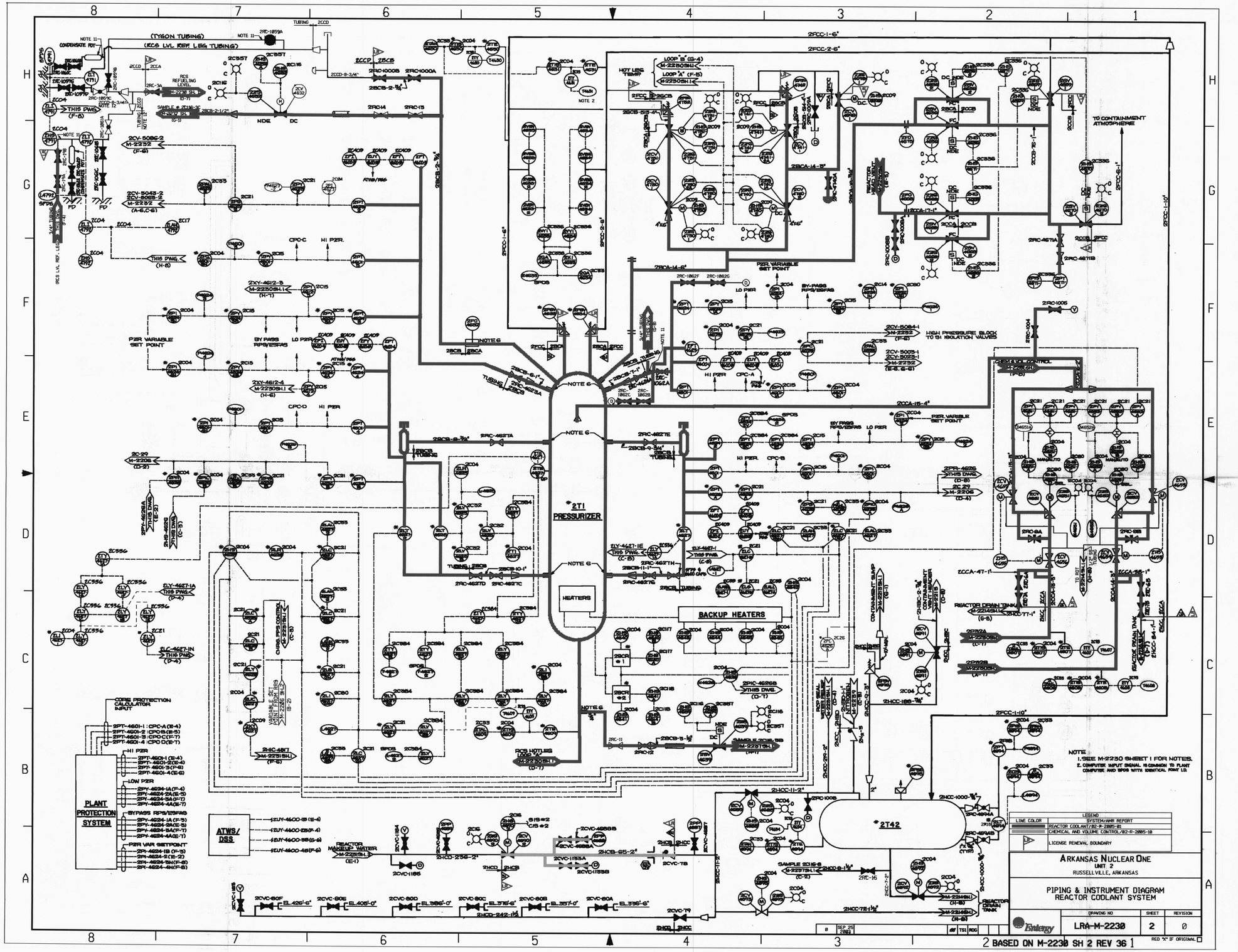

ARKANSAS NUCLEAR ONE
UNIT 2
RUSSELLVILLE, ARKANSAS
PIPING & INSTRUMENT DIAGRAM
REACTOR COOLANT SYSTEM
LRA-M-2230
2
0
BASED ON M-2230 SH 2 REV 36
*2T1
PRESSURIZER
HEATERS
BACKUP HEATERS
*2T42
PLANT PROTECTION SYSTEM
ATWS/DSS
TO CONTAINMENT ATMOSPHERE
HIGH PRESSURE BLOCK TO SI ISOLATION VALVES
NOTE
1. SEE M-2230 SHEET 1 FOR NOTES.
2. COMPUTER INPUT SIGNAL IS COMMON TO PLANT COMPUTER AND SPDS WITH IDENTICAL POINT I.D.
LEGEND
LINE COLOR
SYSTEM/AMR REPORT
REACTOR COOLANT/02-R-2005-01
CHEMICAL AND VOLUME CONTROL/02-R-2005-10
LICENSE RENEWAL BOUNDARY

D-37