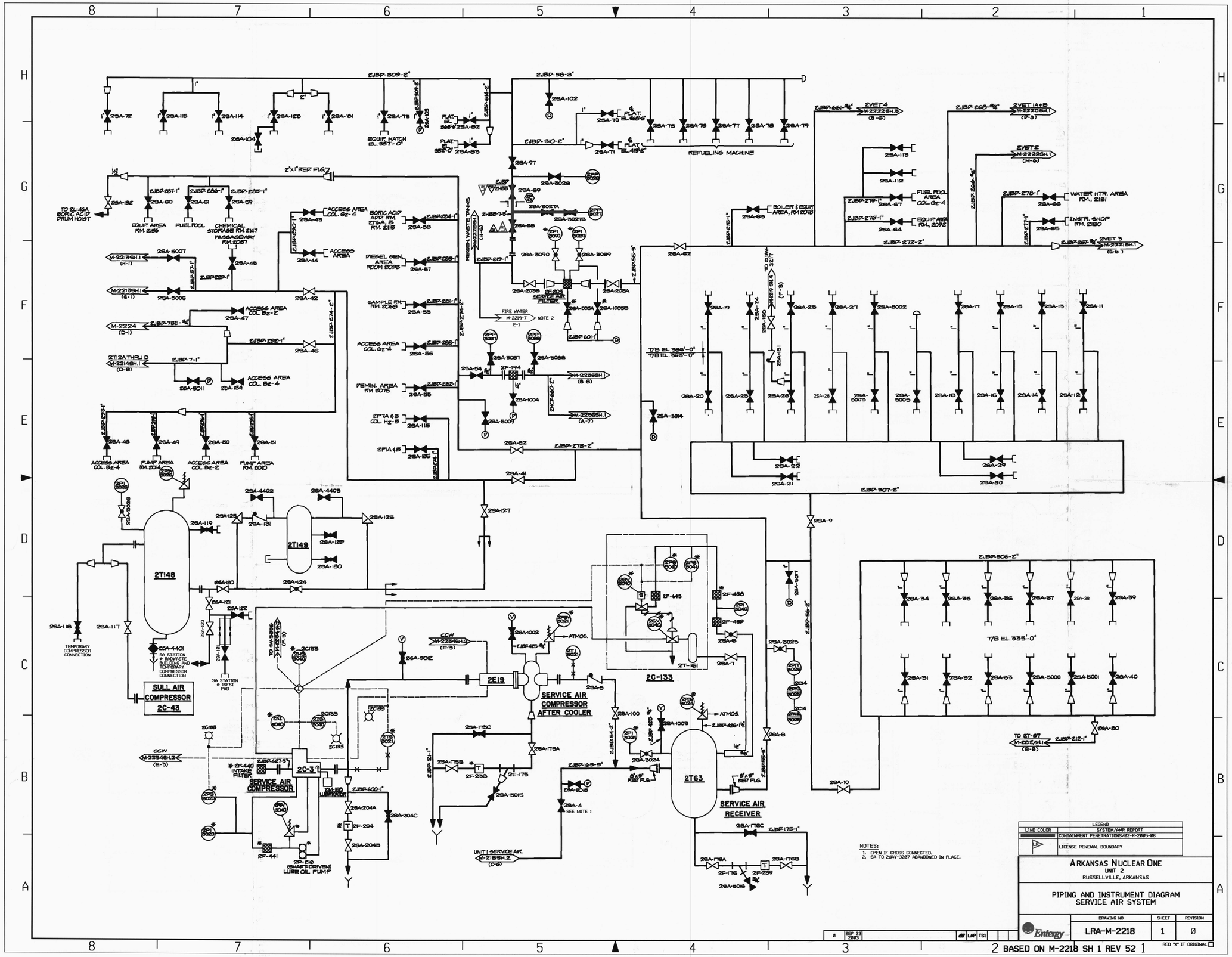
SERVICE AIR COMPRESSOR 2C-3
SERVICE AIR COMPRESSOR AFTER COOLER
SERVICE AIR RECEIVER
SULL AIR COMPRESSOR 2C-43
2T148
2T149
2T63
2C-133
2E19
REFUELING MACHINE
T/B EL. 335'-0"
NOTES:
1. OPEN IF CROSS CONNECTED.
2. SA TO ZUAY-3287 ABANDONED IN PLACE.
LEGEND
LINE COLOR
SYSTEM/AMR REPORT
CONTAINMENT PENETRATIONS/82-R-2005-06
LICENSE RENEWAL BOUNDARY
ARKANSAS NUCLEAR ONE
UNIT 2
RUSSELLVILLE, ARKANSAS
PIPING AND INSTRUMENT DIAGRAM
SERVICE AIR SYSTEM
DRAWING NO
SHEET
REVISION
LRA-M-2218
1
0
Entergy
RED "X" IF ORIGINAL
BASED ON M-2218 SH 1 REV 52

D-23