AECL EACL

# Analysis Basis

## Fuel and Fuel Channel Safety Analysis Methodology

## ACR

**108-03500-AB-004**
**Revision 1**


Prepared by
Rédigé par
FOR Z.B.
Z. Bilanovic
ACR Thermalhydraulics

Reviewed by
Vérifié par
R. Aboud
ACR Thermalhydraulics

Approved by
Approuvé par
M. Bonechi
ACR Safety Engineering



2003 September | Septembre 2003

CONTROLLED - Licensing | CONTRÔLÉ - Permis





2251 Speakman Drive
Mississauga, Ontario
Canada L5K 1B2

2251, rue Speakman
Mississauga (Ontario)
Canada L5K 1B2

AECL EACL

# Analysis Basis

## Fuel and Fuel Channel Safety Analysis Methodology

## ACR

## 108-03500-AB-004
## Revision 1

2003 September

CONTROLLED - Licensing





2251 Speakman Drive
Mississauga, Ontario
Canada L5K 1B2

Septembre 2003

CONTRÔLÉ - Permis





2251, rue Speakman
Mississauga (Ontario)
Canada L5K 1B2

AECL EACL

# Release and Revision History / Liste des documents et des révisions

0939B Rev. 13

**Document Details / Détails sur le document**

| Title / Titre | Total no. of pages / N^bre total de pages |
|---|---|
| Fuel and Fuel Channel Safety Analysis Methodology | 40 |

**CONTROLLED – Licensing / CONTRÔLÉ - Permis**

**Release and Revision History / Liste des documents et des révisions**

| Release Document No./N° | Release Document Date | Revision Révision No./N° | Revision Révision Date | Purpose of Release; Details of Rev./Amendement / Objet du document; détails des rév. ou des modif. | Prepared by / Rédigé par | Reviewed by / Examiné par | Approved by / Approuvé par |
|---|---|---|---|---|---|---|---|
| 1 | 2003/03/21 | D1 | 2003/03/21 | Issued for Review and Comment. | W. Zhu | Z. Bilanovic<br>L.W. Dickson<br>D.J. Oh | M. Bonechi |
| 2 | | 0 | 2003/03/28 | Issued as “Approved for Use”. | W. Zhu | See above | M. Bonechi |
| 3 | | 1 | 2003/09/25 | Issued as “Approved for Use.”<br>Minor changes that do not affect the technical content of the document. | Z. Bilanovic | R. Aboud | M. Bonechi |

**DCS/RMS Input / Données SCD ou SGD**

| Rel. Proj. / Proj. conn. | Project / Projet | SI | Section | Serial / Série | Sheet / Feuille No. / N° | Of / De | Unit No.(s) / Tranche n° |
|---|---|---|---|---|---|---|---|
| | 108 | 03500 | AB | 004 | 1 | 1 | |

dsfpdfrg

# TABLE OF CONTENTS

**SECTION** **PAGE**

# TABLE OF CONTENTS

**SECTION** **PAGE**



## TABLES



## FIGURES

# 1. INTRODUCTION

This analysis basis (AB) document is part of a set of documents that:

- Defines the classes of events;
- Categorizes the postulated events according to the established classes;
- Defines the acceptance criteria and performance targets for each class of events;
- Defines the overall safety analysis objective;
- Describes the analysis tools and methodologies that will be used to demonstrate how the safety analysis objectives, which include acceptance criteria and performance targets, will be met for the events in each particular class; and
- Reports the results of the analyses.

At the top of the hierarchy of reports is the Safety Basis for ACR™* (Reference 1). This document sets the bases for safety analysis in terms of classification of events, acceptance criteria, performance targets, and basic analysis methodologies for each class of events, and justifies the proposed safety analysis approach with respect to both Canadian and relevant international safety requirements.

An additional supporting document within this hierarchy is the Initial Conditions and Standard Assumptions Safety Analysis Basis report (Reference 2). This document outlines the major plant system assumptions that are to be used when performing the safety analysis. The assumptions pertain to the operating state of the reactor before a postulated event and to the plant response after the event, but are not necessarily specific to any particular analysed event. The purpose of this document is to ensure a consistent, well-supported approach to modelling the plant response to a postulated accident when performing design or safety analysis work.

Within the set of documents required to complete the safety analysis, the analysis basis is the penultimate document. This analysis basis document is one of several documents that describes the acceptance criteria, system models, computer codes, and methodologies that will be used in the ACR-700 safety analyses to determine fuel and fuel channel behaviour, and estimate fission-product and hydrogen releases into containment after a postulated accident.

For the events to be analyzed, the overall objectives of the fuel and fuel channel safety analyses are to:

- Establish the number and timing of fuel failures;
- Determine the quantities and species of fission products released into containment;
- Assess fuel channel integrity; and
- Determine the amount of hydrogen generated in the fuel channels and released into containment.

The amount of fission products and species released as well as the amount of hydrogen generated, are to be used as inputs into the analysis of containment behaviour. The

---

* ACR™ (Advanced CANDU Reactor™) is a trademark of Atomic Energy of Canada Limited (AECL).

fission-product releases will ultimately be used for calculations of public dose, and the amount of hydrogen generated will be used to assess containment integrity.

# 2. ACCEPTANCE CRITERIA

Fuel and fuel channel behaviour and fission-product release analysis for postulated accidents is performed to demonstrate that the acceptance criteria for fuel and fuel channel integrity are met. These acceptance criteria are in support of the overall consequence analysis to demonstrate that the acceptance criteria for public dose are met.

There are several acceptance criteria that must be met when performing safety analysis. The requirements are obtained from the following Canadian Nuclear Safety Commission (CNSC) documents:

- Consultative document C-6 Revision 1, "Draft Regulatory Guide – Safety Analysis of CANDU Nuclear Power Plants" (Reference 3).
- Regulatory document R-8, "Requirements for Shutdown Systems for CANDU Nuclear Power Plants" (Reference 4).
- Regulatory document R-9, "Requirements for Emergency Core Cooling Systems for CANDU Nuclear Power Plants" (Reference 5).
- Regulatory document R-10, "The Use of Two Shutdown Systems in Reactors" (Reference 6).

The objective is to clearly interpret the performance and safety requirements imposed by the above documents. The key to the safety design and analysis framework is the definition and classification of events in and beyond the design basis of the plant. All licensing approaches are based on the same risk-informed objective, that is, the most probable occurrences should yield the least radiological consequences, and situations having the potential for the greatest consequences should be least likely to occur. The CNSC Consultative document C-6 Revision 1 responds to this objective by providing a system of classification of events into five classes.

Compliance with the regulatory documents is achieved by meeting the intent of C-6 Revision 1 in the full respect of a risk-informed safety design and analysis framework. This consist of:

- Adoption of five classes of events with associated radiological dose limits;
- Following the basic interpretations of the C-6 Revision 1 Companion document (Reference 7) for classification and treatment of rare events;
- Adoption of acceptance criteria and targets that are based on safety margins increasing with the likelihood of the events; and
- Using assumptions and methods that provide a good balance between the need to be conservative at the higher event likelihood end of the classification, and the reasonable use of a more design centred assessment at the lower event likelihood end.

In line with the above compliance, ACR considers three categories of accidents:

- Design basis accidents,
- Limited core damage accidents, and
- Severe core damage accidents.

Design basis events fall into classes 1, 2 and 3. The limited core damage category falls into classes 4 and 5. The severe core damage accident category will not be considered here, but will be treated in the level 2 PSA.

Design basis events (initiating events) are events that must be accommodated by the plant design within specified limits of the radiological dose to the public and of the key barriers (i.e. fuel, reactor coolant pressure boundary and containment) to the release of radioactivity to the environment. The plant response to design basis events is analyzed using conservative assumptions and detailed models. The design basis events, having a direct or indirect effect on fuel and fuel channels, are:

| | |
|---|---|
| • Failure of control systems | Class 1 |
| - Reactor power control | |
| - Steam generator pressure control | |
| - Steam generator inventory control | |
| - Primary coolant pressure and inventory control | |
| - Moderator temperature control | |
| • Failure of normal electrical power | Class 1 |
| • Failure of normal steam generator feedwater flow | Class 1 |
| • Failure of moderator system (excluding piping failures) | Class 1 |
| • Failure of reactor shield cooling system (excluding piping failures) | Class 1 |
| • Failure of normal cooling system of fuelling machine | Class 1 |
| • Failures resulting in inadvertent heat transport pump trip | Class 1 |
| • Failure causing a loss of very small reactor primary coolant | Class 1 |
| • Failure of a single steam generator tube | Class 2 |
| • Failure of pressure tube of any channel assembly (calandria tube intact) | Class 2 |
| • Failure at any location of any pipe or header carrying steam from the steam generator to the turbine generator (outside R/B) | Class 2 |
| • Feeder failure – Off-stagnation feeder break | Class 2 |
| • Failure of moderator system piping | Class 2 |
| • Reactor shield cooling system piping failures | Class 2 |
| • Partial single channel blockage | Class 2 |
| • Failure at any location of any pipe or header carrying feedwater to the steam generators (outside R/B) | Class 2 |
| • End fitting failure | Class 2 |
| • Failure at any location of any pipe or header carrying feedwater to the steam generators (inside R/B) | Class 3 |

| | |
|---|---|
| • Failure at any location of any pipe or header carrying steam from the steam generator to the turbine generator (inside R/B) | Class 3 |
| • Pressure tube/calandria tube failure | Class 3 |
| • Seizure of a single reactor primary coolant pump | Class 3 |
| • Reactor main coolant system large LOCA | Class 3 |

Event combinations with loss of Class IV power are not listed in this table. However, the following deterministic approach is used for classification of the events involving failure of the reactor coolant pressure boundary (RCPB) along with loss of Class IV power for the generic ACR design; final classification will depend on the ACR plant site and associated grid reliability.

- Class 1 failure of RCPB + Loss of Class IV = Class 2 event
- Class 2 failure of RCPB + Loss of Class IV = Class 3 event
- Class 3 failure of RCPB + Loss of Class IV = Class 3 event

Not all of these accidents will require detailed fuel and fuel channel assessments, but are listed for completeness.

Limited core damage events are more improbable events beyond the design basis, which must be accommodated within specified radiological dose limits to the public. Targets on the performance of the barriers against the release of radioactivity may be set to facilitate meeting the dose limits. The plant response to limited core damage accidents is analysed using design centred assumptions and detailed models. Limited core damage events (in Class 4/5) are:

- Large LOCA + Loss of Emergency Core Cooling (LOECC)
- Small LOCA + LOECC
- Off-Stagnation Feeder Break + LOECC
- Stagnation Feeder Break
- Severe Flow Blockage
- End Fitting Failure + LOECC
- Main Steam Line Break + LOECC
- Feedwater Line Failure + LOECC

Not all of these accidents will require detailed fuel and fuel channel assessments, but are listed here for completeness.

The CNSC requirements for safety analysis taken from the regulatory documents, and an explanation of how each requirement can be demonstrably met, are interpreted in the following sections. The main focus of all these requirements is on demonstrating fuel and fuel channel integrity.

## 2.1 Classification of Acceptance Criteria

The ACR Safety Basis (Reference 1) gives the acceptance criteria used in ACR safety analysis. There is a gradation of acceptance criteria with event class, consistent with the gradation of

public dose limits with event class. This applies not only for the classes of events within the design basis accidents category, but there is also a gradation of acceptance criteria to performance targets in going from the design basis events category to the limited core damage events category. The correspondence between event classes and acceptance criteria and performance targets is shown below.

In summary, and to re-cast the acceptance criteria and performance targets in terms of the classification of events:

**Acceptance Criteria**

Class 1: No fuel failures; and

No pressure tube failures.

Class 2: No fuel failures in the unaffected channels; and

No pressure tube failures in the unaffected channels.

Class 3: Limited fuel failures; and

No pressure tube failures (except channels that are affected by the initiating event)

**Performance Targets**

Class 3: No significant plastic deformation of pressure tubes.

Class 4/5: No fuel centreline melting or sheath melting (in non-affected channels) and for non-LOECC events limit fuel failures;

No fuel channel failures (in non-affected channels). Ensure sufficient moderator subcooling if pressure tube sags into contact with the calandria tube.

A more detailed discussion of the acceptance criteria is given in the following sections.

## 2.2 Fuel Channel Integrity

The fuel channel assembly comprises a pressure tube, a calandria tube, two end fittings (one at each end of the pressure tube), and various internal components. The purpose of the fuel channel analysis is to demonstrate the integrity of fuel channels and ensure that a well-defined safe geometry is maintained.

The requirements for fuel channel integrity is given in Reference 5 as:

> "All fuel in the reactor and all fuel channels shall be kept in a configuration such that continued removal by the ECCS of the decay heat produced by the fuel can be maintained."

The statement above requires that the fuel channels shall not fail, except for the affected channel during a single-channel event. If the affected channel fails, then that failure shall not propagate to other channels.

Pressure-tube integrity is considered as a sufficient, but not a necessary, condition to ensure fuel-channel integrity. The sufficient criteria, supported by experimental evidence, used to assess fuel-channel integrity are as follows:

1. If the pressure tube temperature remains below 600°C, pressure tube failure will not occur and no strain calculations are required. This is inferred from experimental work given in

References 8, 9 and 10. Thus, pressure tube temperatures below 600°C will ensure that no fuel channel failures occur due to pressure tube overheating.

2. If the pressure tube temperature is above 600°C, the pressure tube shall not fail due to local strain prior to contacting the calandria tube (References 9 and 10).
3. If the pressure tube temperature is above 600°C and the pressure tube strains[1] to contact its calandria tube, the calandria tube shall remain intact. This condition is satisfied if sustained film boiling does not occur on the calandria tube outside surface.
4. Fuel centerline melting is precluded.

## 2.3 Fuel Integrity

Fuel analysis evaluates fuel element and fuel sheath behaviour. The purpose of the fuel analysis is to demonstrate the integrity of fuel and ensure that a well-defined safe geometry is maintained (Reference 5).

> "For all design basis events, the ECCS shall be capable of maintaining or re-establishing sufficient cooling of the fuel and fuel channels so as to limit the release of radioactive material from the fuel in the reactor and to maintain fuel channel integrity."

For events where fuel failures must be prevented, the following sufficient criteria are to be met.

- If fuel sheath dryout or flow stratification in the channel can be shown not to occur, fuel failures will not occur. In such a case, fuel sheath temperatures would remain near normal operating conditions (< 400°C).
- If dryout or flow stratification does occur, but fuel sheath temperatures remain below 800°C, then fuel failures are precluded and no detailed fuel failure analysis is required. Experiments (References 11, 12 and 13) have shown that at temperatures lower than 800°C the fuel will not fail before one hour in dryout conditions.
- If fuel sheath temperatures were calculated to be above 800°C then detailed fuel analysis would be required to show the fuel sheath remains intact.

If the sheath temperature is greater than 800°C, then the following five criteria must be met to assure fuel integrity.

1. No fuel centerline melting.
2. No excessive diametral strain.
3. No significant cracks in the surface oxide.
4. No oxygen embrittlement.
5. No sheath failure because of beryllium-braze penetration at bearing pad or spacer pad locations.

---

[1] For ACR, the pressure tube is expected to sag into contact with its calandria tube for limited core damage accidents. Uniform straining (ballooning) into contact is not expected.

# 3. SYSTEMS AND MODELS

The ACR fuel and fuel channel designs have been reflected in the single channel models used for fuel and fuel channel thermal-mechanical transients behaviour calculations and are described in this section. The models presented here are used for both the design basis events as well as the limited core damage events.

## 3.1 Fuel Channel Assembly

The ACR fuel channel assembly is illustrated in Figure 1. The fuel channel assembly comprises a pressure tube, a calandria tube, two end fittings (one at each end of the pressure tube), and various internal components. Each pressure tube is thermally insulated from the low temperature, low pressure moderator by the carbon dioxide ($CO_2$) filled gas annulus between the pressure tube and the calandria tube. Spacers, positioned along the length of the pressure tube, maintain the annular space and prevent contact between the two tubes during normal operation. Each end fitting holds a liner tube, a shield plug and a channel closure. The geometry data of fuel channel components are listed in Table 1. The data is taken from Reference 14.

The Zirconium alloy (Zr-2.5% Nb) pressure tube is attached to the inboard end of the stainless steel end fitting by a roll-expanded joint. The liner tube is designed for the end fittings and is located at the feeder connection. The liner tube diffuses the flow to prevent fuel bundle damage during fuel changing. The outlet shield plug locates the fuel bundles in the fuel channel during normal operation. The shield plugs also provide radiation shielding at both ends of the fuel channel assembly. The channel closure seals the ends of the fuel channel and allows on-power fuel changing.

Pressurized light water coolant flows from the inlet feeder into the inlet end fitting, along the end fitting and through the shield plug, through and around the twelve fuel bundles in the pressure tube, through the outlet shield plug and end fitting and into the outlet feeder. The light water coolant removes the nuclear heat generated in the fuel bundles. The reactor coolant flows through adjacent fuel channels in opposite directions.

The calandria tubes surround the pressure tubes and physically separate them from the moderator. The diameter of the calandria tube is determined by reactor physics in order to maintain a small negative coolant void reactivity with the reduced lattice pitch, and a reduced fuel to moderator volume ratio.

## 3.2 ACR Fuel

Design enhancements are incorporated into the fuel design specifically for use in the ACR. These features include enriched uranium, neutron absorber (dysprosium) in the centre element, and shorter pellets with larger chamfers, flipped endplates and longer and taller bearing pads (Reference 14).

These design features enable the fuel to operate at the ACR coolant temperatures and pressures, to achieve much higher fuel burn-up than natural uranium CANDU fuel, have a negative coolant void reactivity and higher margins to dryout.

The ACR fuel bundle is a 43-element design. The centre fuel element and inner ring of 7 elements have outer diameters of 13.5 mm. The remaining 35 elements in the outer two rings have smaller outer diameters of 11.5 mm. In the model, the elements are represented by four different pin groups (or rings) in which each group has 1, 7, 14, and 21 elements as shown in Figure 2. The fuel composition is listed in Table 2.

The centre fuel element contains natural uranium while the remaining 42 fuel elements contain 2.1 wt% $^{235}U$ enriched $UO_2$ pellets. A small amount, 7.5 wt%, of dysprosium is added to the fuel pellets of the centre fuel element to reach the reference negative coolant void reactivity of 7 milli-k (Reference 14).

The fuel element is composed of two main components, the Zircaloy sheath and the uranium dioxide fuel pellet. When loaded with pellets, the bundle weighs about 23 kg, of which about 90% is uranium oxide fuel. A very thin layer of graphite (CANLUB) covers the inside surface of all sheaths and protects them from fission-product damage. End caps are resistance welded to the sheath extremities to seal the elements. To facilitate leak testing and to improve pellet-to-sheath heat transfer, the void within the fuel elements is filled with unpressurized helium/air prior to end cap welding. End plates are resistance welded to the end caps to hold the elements in a bundle assembly. Spacer pads are brazed to the adjacent elements at their mid-points to provide the desired inter-element separations. Bearing pads brazed near the ends and at the mid-point of each outer element support the bundle within the pressure tube. To enhance the Critical Heat Flux (CHF), special buttons are brazed to the elements at two planes, each one a quarter length from the end (Reference 14).

The fuel sheaths, end caps, endplates and appendages are made of Zircaloy-4 because of its excellent nuclear characteristics of low neutron absorption, good corrosion resistance and low hydrogen pickup.

## 3.3 CATHENA Single Channel Model

Single channel models are used for two purposes:

- To examine the behaviour of a single high-power channel once the average circuit conditions in an accident have been predicted
- To predict the course of accidents initiating in a single channel (single-channel event).

A single-channel event may be postulated to occur in any of the 284 channels at any time in the operating history of the reactor. The objective of the fuel and fuel channel analysis for each single-channel event is to examine the channel thermalhydraulic behaviour and estimate the fission-product releases from fuel in the affected channel. A single-channel model is used to simulate a single reactor channel from the inlet header to the outlet header. The header conditions are treated as boundary conditions and are generated from the full circuit simulations.

The components of a single-channel model include a reactor inlet header (RIH) and a reactor outlet header (ROH), feeders, end fittings, and the fuel bundles inside a fuel channel. It represents an individual fuel channel thermalhydraulic path from the RIH through the fuel channel to the ROH. A diagram showing the nodalization of a typical single-channel model is provided in Figure 3. In the ACR, pressurized light water coolant flows from the RIH, through the inlet feeders, into the inlet end fitting, then flows along the end fitting and the shield plug, through and around the fuel bundles within the pressure tube. For the symmetric layout of the

single channel model, the coolant flows toward the ROH through the components in the opposite order. The light water coolant transports the heat generated in the fuel bundles to the steam generators.

To analyze the fuel and fuel channel behaviour related consequences of postulated events, the channels are divided into twelve characteristic flow regions corresponding to the twelve fuel bundles within the channel. The nodes are equal in length and represent the location of the fuel bundles.

The same model is used for the analysis of high-power channel behaviour for events that do not initiate in a single channel (for example large breaks in the reactor inlet header) and for the intact channels behaviour for the single-channel events.

# 4. COMPUTER CODES

Several computer codes are used for fuel and fuel channel safety analyses. A CATHENA single channel model is used to calculate the steady-state and transient thermalhydraulic behaviour of the licensing limit power channel. The boundary conditions for the CATHENA single channel model are taken from CATHENA full circuit simulations. ELESTRES calculates the steady state fuel element conditions based upon the power/burnup histories calculated by fuelling simulations. The results from ELESTRES are used as initial conditions by the ELOCA code to calculate the transient thermal-mechanical behaviour of fuel elements within the licensing limit power channel during a postulated accident. In addition to the initial conditions, thermalhydraulic boundary conditions from the CATHENA single channel calculations and the power transient from reactor physics calculations are also required for ELOCA calculations of fuel and fuel sheath conditions. The SOURCE code calculates the fission product release from the fuel. The timing of fuel sheath failure as well as the fuel and fuel sheath transient temperatures are provided by ELOCA. The total inventories of fission products for an element given a power/burnup history are calculated by the ORIGEN-S code. The overall suite of safety analysis tools and how they are connected are shown in Figure 4.

## 4.1 CATHENA

The CATHENA thermalhydraulic computer code is used in the ACR safety analysis. CATHENA is a one-dimensional, two-fluid nonequilibrium thermalhydraulic computer code developed by AECL primarily for the analysis of postulated loss of coolant accident events in a CANDU reactor. The wall heat transfer package allows an extensive list of heat transfer correlations to be used and includes radial and circumferential conduction, thermal radiation, and the Zr-$H_2O$ reaction heat source. The heat transfer package is general and allows the connection of multiple wall surfaces to a single thermalhydraulic node.

### 4.1.1 Model Characteristics

The design of the ACR-700 has the following characteristics that are accommodated in the CATHENA single-channel thermalhydraulics model:

- Geometry and Nodalization

  The major innovations in ACR fuel and fuel channel are the use of slightly enriched uranium and light water as coolant flowing through the fuel channels. These result in a more compact reactor core design, a tighter lattice pitch of 220 mm (Reference 14), and a reduction of heavy water inventory. The higher pressures and temperatures of reactor coolant also lead to the modified design of the inlet feeder, outlet feeder and end-fitting geometry. To accommodate the modified coolant conditions and to achieve the target pressure tube life, the thickness of pressure tube was increased. In order to reduce the moderator to fuel ratio, to accommodate the thicker pressure tube and to strengthen the overall channel, the calandria tube diameter and thickness were increased. In addition, the endfittings were modified. The values of some of the more important channel parameters are listed in Table 1 (from Reference 14).

  For the modelling of the ACR fuel bundle, the elements are represented by four different pin groups: one for the central element and the others for the three surrounding rings of elements

containing 7, 14 and 21 elements for the 43-element bundle. Figure 2 shows the circumferential nodalization of the ACR fuel bundle, as well as the pressure and calandria tubes. All but the centre element of bundle have been divided into two circumferential sectors, with the centre element being represented by one sector. The pressure tube and calandria tube have been divided into a total of 36 circumferential sectors of equal length. Two-dimensional (radial and circumferential) heat conduction is modelled for each fuel element, for the pressure tube, and for the calandria tube.

Each fuel element is divided into 4 radial regions: uranium dioxide, gap, Zircaloy sheath, and Zircaloy oxide layer. These regions are represented by 6, 2, 2 and 2 radial nodes, respectively. This nodalization applies to each circumferential sector in each element. The pressure tube is divided into two radial regions: Zircaloy oxide layer and Zircaloy, each represented by 2 and 6 radial nodes. The calandria tube has one radial region with 5 radial nodes. Both the pressure tube and the calandria tube are axially divided into 12 segments, with the length of each segment being equal to the bundle length.

- Channel Power

  A licensing limit power channel model is constructed so that fuel, fuel sheath and pressure tube temperatures are maximized, and that fission product releases are also conservatively estimated. Starting from the maximum time average channel power of 7.3 MW (Reference 14), adding a 6% fuelling ripple effect, 2% uncertainties in reactor power measurements and a 2% safety margin, the licensing limit channel power of 8.0 MW is obtained for use in the analyses.

  The licensing limit channel power of 8.0 MW will be used in the analysis of all design basis events. For the limited core damage events, only the refuelling ripple will be accounted for in the analysis of the single channel events. For other LOCA events, the effect of a recent refuelling is accounted for by including the ripple to increase the power of the refuelled channel. In addition to affecting the power distribution of the refuelled channel, the neighbouring channels are affected; therefore this will be accounted for in the analysis. The rest of the channels will be at their time average values, with the maximum value being 7.3 MW.

- Fuel Properties

  Two-dimensional (radial and circumferential) heat conduction is modelled in the ACR bundles, for each fuel element, for the pressure tube, and for the calandria tube. ACR fuel properties and the fuel pin surface locations, as defined by user-supplied alpha data $\alpha_{WET,}$, $\alpha_{DRY}$ are used to identify what portions of the fuel elements are in contact with steam (dry) or liquid (wet) during separated two-phase flow. These are calculated separately and provided as input in CATHENA single channel calculations. CATHENA requires the fuel-to-sheath gap heat transfer coefficient in each ring. Because of the different power ratings, the fuel-to-sheath heat transfer coefficients will vary from one ring to another. Furthermore, the gap conductance varies at each bundle position of the same ring, because of the different bundle burnups and bundle powers. Conservatively, the gap conductance of the highest power bundle, bundle 4, will be applied to every bundle in the CATHENA single channel calculation for the design basis events. These values will be conservatively calculated using the ELESTRES code for the ACR fuel. For the limited core damage events, the gap

conductances will be calculated using design centre values for the fuel parameters, which includes not only the fuel properties but the fuel power/burnup history as well.

- Thermal Radiation

  Thermal radiation is modeled among the fuel elements, between the fuel elements and the pressure tube and between the pressure tube and calandria tube. The emissivity is 0.8 for the fuel element sheaths and the inside and outside surfaces of the pressure tube, and 0.7 for the inside surface of the calandria tube. The emissivity of 0.8 is characteristic of an oxide surface and 0.7 is the minimum target emissivity of the blackened calandria tube. Radiation view factor matrices of the 43-element CANFLEX bundle are computed and provided as input to CATHENA.

- Zirconium-Steam Reaction

  The Urbanic-Heidrick correlation for zirconium-steam reaction is used in this analysis. Zirconium-steam reaction is modeled on the sheath outer and pressure tube inner surfaces. In application of the Urbanic-Heidrick correlation, zirconium-steam reaction is not expected to occur below 827°C. Therefore, significant hydrogen production is not expected to take place at sheath temperatures below 827°C.

  A detailed description of the single channel model of ACR-700 can be found in Reference 15.

### 4.1.2 Input

The input data for the CATHENA single-channel model includes a detailed description of the fuel and fuel channel geometry and properties. For the different transient and accident analyses, the boundary conditions and the power rundown are taken from the circuit thermalhydraulic analysis and the reactor physics calculations.

#### 4.1.2.1 Boundary Condition

The reactor header hydraulic boundary conditions are obtained from either circuit simulations or an expectation based upon reactor design parameters, as in the steady-state calculations or short duration single channel events where the circuit thermalhydraulics would not be significantly affected by the transient. The required header boundary conditions include coolant pressure, vapour enthalpy, liquid enthalpy and void fraction in RIH and ROH.

#### 4.1.2.2 Power Transient

In large Loss Of Coolant Accident (LOCA) analysis, a large break is postulated to occur in a large diameter pipe of the primary Heat Transport System (HTS), discharging coolant into containment. Because of the negative coolant void reactivity of nominally 7 milli-k in the ACR, the power decreases depending on break size and initial reactor power, until the reactor is shut down on a process trip.

The reactor power transient curve is required in large LOCA analysis. For different break sizes and locations, physics analysis provides a relative transient rundown power curve according to the transient coolant density, coolant and fuel temperatures from circuit thermalhydraulic analysis. For other transients, such as small LOCA or single channel events, if the reactor regulating system cannot compensate for the negative reactivity insertion to keep reactor power

at 100%, a coupled physics/thermalhydraulics calculation will be performed to obtain the power transient.

In the preliminary analysis, the decay power curve for the 37-element fuel is used. The decay power curve varies from channel to channel, however, the highest decay power curve for the 37-element fuel is used. The applicability of this to represent the decay power for an ACR core will be verified. The decay power table used in the analysis is listed in Table 3.

### 4.1.3 Output

#### 4.1.3.1 Fuel and Fuel Channel Model

The pressure tube is modeled using 12 axial segments. Each axial segment has the same length as a fuel bundle. The detailed pressure tube temperatures and strains will be used for assessing pressure tube integrity.

Each fuel ring is modelled by 12 equal axial segments corresponding to the length of a fuel bundle. Bundle locations are numbered from the channel-inlet end. CATHENA calculates the temperature of fuel and fuel sheath, as well as the sheath-to-coolant heat transfer coefficient required for detailed fuel analysis.

#### 4.1.3.2 Coolant Properties for ELESTRES

The coolant temperature and pressure of each bundle and each ring at the steady-state are required by ELESTRES as a boundary condition. These values are calculated by the CATHENA single-channel steady-state calculation.

#### 4.1.3.3 Thermalhydraulic Boundary Conditions for ELOCA

The transient coolant temperature, pressure and sheath-to-coolant heat transfer coefficient of each bundle and fuel ring are calculated by the CATHENA single channel analysis. These are the boundary conditions required by ELOCA, which in turn calculates the detailed fuel thermal-mechanical behaviour.

## 4.2 ELESTRES

The computer code used for determining the fuel initial conditions is the ELESTRES code, version 2.0. This version of the code is used in ACR safety analyses because it has been specifically developed for evaluating fuel performance at higher burnups (up to approximately 1300 MWh/kgU) required by the ACR fuel design.

ELESTRES is a fuel performance code that models the thermal and mechanical behaviour of a fuel element for a given power history under normal operating conditions. It contains one-dimensional models of heat generation, temperature distribution, fission-gas release, and pellet-to-sheath heat transfer.

ELESTRES uses the ANS 5.4 model to calculate the release of fission gas into the fuel-to-sheath gap of an element. The two purposes of ELESTRES simulation are:

- providing fuel conditions (such as $UO_2$ temperature distribution, heat generation, sheath temperature, sheath strain, internal gas pressure) at the time just prior to a postulated

accident, to be used as initial conditions for estimating the timing of fuel element (sheath) failure during the accident, and

- providing the distribution of a number of different fission products (within the fuel grains, released from the $UO_2$ fuel matrix to the interconnected voids (grain boundaries), and the fuel-to-sheath gap) at the time just prior to a postulated accident. These are the initial conditions that will be required for the purpose of estimating releases from fuel in the event of fuel element failures.

### 4.2.1 Input

A total of 48 ELESTRES calculations represent the 12 bundles each with 4 fuel rings that are assumed to have a unique set of thermal-hydraulic and power/burnup conditions.

The steady-state coolant conditions of each fuel ring for each bundle in the channel are obtained from the steady-state thermalhydraulic CATHENA single channel calculation.

The other ELESTRES input parameters for the ACR fuel bundles including geometry, fuel density, filling gas volume, material properties and the presence of CANLUB, are obtained from Reference 14. Table 4 lists the key ELESTRES input parameters for the ACR fuel bundles.

ELESTRES calculates the fission-product inventories in the fuel with the same channel power as in the CATHENA single-channel model and for the fuel conditions just prior to the postulated accident. The overpower envelope (described in Section 4.2.1.1), which is expected to encompass all of the possible element powers and burnups, is derived from the physics calculations.

#### 4.2.1.1 Overpower Envelope

In order to perform fission-product analysis, the power-burnup history envelope must be obtained from fuel management calculations. The reference overpower envelope is a curve of bundle power versus bundle average burnup which encompasses most of the bundle powers predicted in a fuel management simulation of reactor operation from start-up until the time that the last bundle from the initial core is discharged.

The power and burnup of a given element depend on its location within the bundle, within the channel, within the reactor, as well as the point in its operating life. A parametric analysis of element power and burnup is conducted with ELESTRES rather than simulating every element in the core at the time of the event.

The envelope is discretized into a series of power steps at constant burnup followed by a hold period at constant power for an interval of 12 MW h/kg(U) (or less if the power is varying rapidly). Thus, a power history is derived. For a given power/burnup combination, it is assumed that the power history prior to the given burnup is the same shape as the overpower envelope. Thus, the discretized power/burnup history is translated vertically by multiplying the powers by a constant value such that it passes through the appropriate history point. The fuelling scheme of ACR is the two-bundle shift, so every pair of bundles in each channel has same dwell periods in six different bundle positions. Therefore, two power histories are required to represent the odd and even position bundles.

### 4.2.2 Output

ELESTRES models fuel element thermal and mechanical behaviour during irradiation under normal operating conditions. The state of the fuel at the start of the accident will largely determine the subsequent thermal-mechanical behaviour of the fuel and the fission-product releases.

Besides the fission-product inventory, and sheath and fuel conditions modelled in ELESTRES, a data file (*eldat.dat*) is generated containing the required initial conditions specifically for use with the ELOCA code. The ELOCA code is used to calculate the fuel behaviour during high-temperature transients, such as large-break LOCA.

## 4.3 ELOCA

ELOCA-IST 2.1 is used for calculating the transient fuel and sheath properties. It models the thermal-mechanical behaviour of each fuel element in the ACR-700 during postulated accidents.

### 4.3.1 Input

Two files are required for ELOCA-IST, an *eldat* file and an *input* file. The conditions of the fuel pin at the start of the transient are provided by ELESTRES through the *eldat* file containing information on the thermal-mechanical state, fission-product inventory, gas pressure, etc. The *input* file contains information on code execution options, element segmentation, coolant boundary conditions and the power transient during the postulated accident.

#### 4.3.1.1 Coolant Boundary Conditions

The coolant boundary conditions are provided to the ELOCA code from the single-channel CATHENA analysis. These are coolant pressure, coolant temperature, and sheath-to-coolant heat-transfer coefficients as a function of time.

#### 4.3.1.2 Power Curve

The same transient power curve used in the CATHENA single-channel model is also applied in ELOCA model.

### 4.3.2 Output

ELOCA is used to determine the timing, nature and extent of sheath failure for all failure mechanisms. The thermal and mechanical behaviour of the fuel and fuel sheath during a postulated accident include the fuel and sheath temperature, sheath strain, degree of oxidation, and the possibility of beryllium-braze penetration. A tabular history of these thermal-mechanical quantities is presented in the output of the ELOCA-IST code.

## 4.4 SOURCE

The SOURCE-IST 2.0 code has been developed to calculate the fission-product release from the uranium dioxide fuel pellets during normal operation and postulated accident conditions.

SOURCE IST 2.0 models radionuclide production and decay, as well as all of the primary phenomena affecting fission-product release from the beginning of the normal operating

conditions irradiation, through to the termination of the accident scenario. Some of the phenomena modelled are: diffusion release of fission products from the fuel grains, grain-boundary sweeping/grain growth, grain-boundary bubble coalescence/tunnel interlinkage, vapour transport/columnar grain growth, thermal fuel cracking, fuel-to-sheath gap transport, effect of average uranium oxidation state on diffusion coefficient ($UO_{2-x}$, $UO_{2+x}$, $U_4O_9$ and $U_3O_8$), effect of phase changes ($UO_2$/Zircaloy interaction, $UO_2$ dissolution in molten Zircaloy, fuel melting and matrix stripping), fission-product vaporization and volatilisation, temperature transients, grain-boundary separation and fission-product leaching.

SOURCE IST 2.0 models an extensive list of fission products (approximately 150 fission products) and actinides in units of atoms and TBq. It calculates the nuclide inventory distribution of actinide and fission-product isotopes for each user-defined time step, the number of atoms calculated in the fuel grain-matrix, at the fuel-grain boundary, at the fuel surface, in the fuel-sheath gap, or released to the primary heat transport system.

### 4.4.1 Input

The input information used by SOURCE IST 2.0 includes initial (fresh) fuel conditions, geometry, fuel failure time and fuel rewet time. SOURCE IST 2.0 also requires time-related parameters such as fuel geometry, coolant properties, gas flow rate and annulus properties, and fuel fractions of each annulus. Four principal input files are required to provide all of the necessary input data for SOURCE-IST 2.0.

Table 5 lists the key SOURCE input parameters for ACR fuel elements. Most of other input data can be calculated by computer codes, such as CATHENA, ELESTRES and ELOCA.

#### 4.4.1.1 Fuel Geometry

Fuel geometry is supplied in the CASEGEOM.TXT file, and is used to provide details about the dimensions of the fuel and initial mass of uranium in the sample, the isotopic fractions of $^{234}U$ and $^{235}U$, the number and geometry of the annuli. SOURCE divides the fuel sample into multiple annuli. The information on fuel geometry is the same as that required for the ELESTRES input file.

#### 4.4.1.2 Initial Fuel Conditions

Information on the initial fuel conditions is supplied in the FRESHFUEL.INPUT file which contains generic information about the fuel: geometry, mass, isotope fractions of $^{234}U$ and $^{235}U$, the initial grain diameter, initial bubble radius and the initial stoichiometric deviation.

#### 4.4.1.3 Verification of Input Parameters

The file SAMPLE.RDS is used to verify whether some key simulation parameters are within the allowed range. It also includes several quantities that are generic to the reactor and its case geometry (core, channel, bundle, element, mini-element or fragment). The “element” is set as the sample unit during ACR safety analysis to be consistent with applications of other codes, such as CATHENA, ELESTRES and ELOCA.

#### 4.4.1.4 Transient Calculation

The required input data, listed in the file TRANSIENT.IN, includes a description of the case geometry, as in CASEGEOM.TXT and SAMPLE.RDS, and the number of normal–operating-condition and transient time steps corresponding to appropriate intervals generated in the ELESTRES and ELOCA calculations.

In the safety analysis, the sheath failure time and the rewet time are supplied. The sheath failure times are determined using the criteria in Section 5.2 based upon the calculations performed by ELOCA. The rewet time is determined by the code based on the thermalhydraulic conditions.

where the superscript $i$ and $i$-1 refer to the current and the previous time history points, respectively. $T_c$ is coolant temperature and $h_c$ is sheath-to-coolant heat transfer coefficient.

Three input tables with time-related data are required: sample geometry table, coolant properties table and gas flow rate table. The sample geometry table contains the equivalent channel diameter, fuel sheath diameter, fuel element length, and fuel surface area. The coolant properties table includes coolant temperature, coolant pressure, coolant saturation temperature and fuel-to-sheath gap pressure. The gas flow rate table contains hydrogen, steam, inert gas and oxygen flow around the fuel pellet. The gas flow rate before sheath failure is zero.

For each annulus in the sample, two input tables are required describing the annulus properties and fuel phase-change fractions. The fuel thermal power, fuel temperature, radial fuel temperature gradient, fuel hydrostatic stress, and fuel stoichiometric deviation comprise the annulus properties table. For each annulus, the properties under normal operating condition are extracted from the ELESTRES output file. The fuel temperature and temperature gradient under transient condition are calculated from fuel surface and fuel centre-line temperature from ELOCA, and the fuel hydrostatic stress can be calculated by:

$$\sigma = -\frac{1}{3}(3P_{gap} + P_{fuelsheath}\frac{R}{R_{uc}})$$

where $P_{gap}$ –internal gas pressure (MPa)

$P_{fuelsheath}$ – $UO_2$ pellet to sheath contact pressure (MPa)

$R$ – $UO_2$ pellet outer radius (m)

$R_{uc}$ – pellet radius at uncracked region (m)

The fuel stoichiometric deviation ($x$ in $UO_{2+x}$) must be estimated separately and provided as input to SOURCE. Significant deviations from stoichiometry are only expected after sheath failure for some scenarios.

The fuel phase-change fractions, including the fraction of fuel melting, the fraction of $UO_2$ dissolved in molten Zircaloy, the fraction of $UO_2$/Zircaloy interaction, the fraction of the original $UO_2$ that has been volatilised and the fraction of $UO_2$ that has been subjected to leaching must also be supplied at each time step. The fraction of the $UO_2$ that has melted can be determined using ELOCA. The thickness of the $UO_2$/Zircaloy interaction layer can be calculated from the information generated by ELOCA. If $UO_2$ is exposed to the coolant flow, the rate of $UO_2$ volatilisation may be estimated using the methodology listed in Reference 16. The fraction of $UO_2$ that has been dissolved or mechanically eroded by leaching with water is usually small during the high-temperature part of the transient.

### 4.4.2 Output

#### 4.4.2.1 Detailed Output File

The main output file contains a nuclide inventory distribution table of actinide and fission-product isotopes at each time step. The table contains the number of atoms calculated in the matrix, at the grain boundaries, at the fuel surface, in the gap, or released for each time step, as well as the total number of atoms.

#### 4.4.2.2 Summary Output File

The other main output file, SUMMARY.OUT, includes four summary tables of final analysis results. The initial summary table provides the nuclide inventory distribution values prior to sheath failure and the final summary table provides the nuclide inventory distribution values at the end of the transient analysis, the final TBq summary table is a list of the final nuclide inventory distribution values by radioactivity (TBq), and the fractional summary table reports the nuclide inventory distribution as atom fractions at the end of the transient, the pre-transient inventory, the released inventory, and the fractional release of each nuclide.

## 4.5 ORIGEN-S

ORIGEN-S computes time-dependent concentrations and source terms of a large number of isotopes which are simultaneously generated or depleted through neutronic transmutation, fission, radioactive decay, input feed rates and physical or chemical removal rates (Reference 17).

A large variety of options and features are incorporated into the ORIGEN-S code. The ORIGEN-S code has been developed to solve a wide variety of isotope decay and build-up problems, including fuel and waste management, blending reactor streams, recycling actinides or molten salt, spent fuel gamma and neutron sources, fuel decay-heat generation rates, source energies per fission and thermocouple transmutations.

Provided with the fuel irradiation and decay history, ORIGEN-S determines the composition and radioactivity of fission products, sheath materials and fuel materials that are present after various time durations.

### 4.5.1 Input

The input file of ORIGEN-S code requires six data blocks. Four blocks contain the library request parameters and two data blocks contain information describing the problem.

ORIGEN-S requires much the same input data as ELESTRES, including the fuel mass, power-burnup history representing the odd or even numbered bundles of a specified fuel ring, and the initial concentration of each isotope, is required for each case.

### 4.5.2 Output

Irradiation of ACR fuel in the reactor core produces hundreds of radioactive fission products and actinides. The ORIGEN-S code considers the effect of both irradiation and decay, and determines time-related quantities or activities of elements or isotopes.

The main output of ORIGEN-S includes the concentration, neutron and photon emission rates and neutron and photon spectra result during the decay or non-irradiation period, given either by quantity or converted to other units.

As ORIGEN-S has the capability of tracking a large number of isotopes, including fissionable isotopes such as $^{239}$Pu, coupled with the burnup-dependent cross-sections, the effects of burnup and consequently the changes in fuel composition on fission-product production are accounted for.

# 5. METHODOLOGY

This section summarizes assumptions and the methods used in performing the analysis of fuel and fuel channel integrity, and fission-product release.

## 5.1 Fuel Channel Integrity

The potential fuel channel failure mechanisms are listed as follows:

- impact of a fuel string on channel components at the channel inlet, caused by flow reversal in a fuel channel due to a large inlet header break;
- loading on the components at the channel ends due to constrained fuel string axial expansion;
- localized high-temperature deformation of a pressure tube (PT) caused by one of the following:
  - fuel and/or clad melting and relocation into contact with the pressure tube,
  - bearing pad (BP)/PT contact,
  - fuel element (FE)/PT contact in the absence of constrained expansion of the fuel string,
  - FE/PT contact due to constrained axial expansion of the fuel string,
  - non-uniform coolant conditions (i.e., thermalhydraulic asymmetries).

For each scenario the analysis provides information allowing for direct confirmation of compliance with the following criteria:

- Fuel melting criterion,
- Pressure tube deformation criterion:
  - If the pressure tube temperature is less than 600°C, pressure tube integrity is assured.
  - Deformation criterion without PT/CT contact: The pressure tube will be considered to remain intact if the pressure tube does not fail due to local strain.

From the above criteria, the following parameters are required for a fuel channel integrity analysis: channel pressure, temperature of fuel, sheath, pressure tube and calandria tube, as well as pressure tube strain. All of these parameters can be calculated with the CATHENA single-channel model. Furthermore, the fuel and fuel sheath temperatures are also available from ELOCA.

For the other criteria, experimental information, analytical methods or a combination of both may be used to demonstrate compliance for the limiting scenarios.

## 5.2 Fuel Integrity

The sufficient criteria used for fuel integrity analysis were introduced in Section 2.3. The methodology of applying the criteria is summarized in following.

- If the sheath temperature is either $T_{sheath} < 400°C$ or $400°C \le T_{sheath} < 800°C$ lasting no more than one hour in the post-dryout condition, there is no further analysis required for fuel integrity.
- If $T_{sheath} \ge 800°C$, then the following five criteria must be met to assure fuel integrity. The criteria are applied only to the fuel in the non-failed channels for single-channel events:

1. No fuel centerline melting.

   A fuel element will not fail due to volume expansion causing excessive sheath strain if centerline temperature remains below the melting point (Reference 18).
2. No excessive diameteral strain.

   A fuel element will not fail due to excessive sheath strain if, for sheath temperatures less than 1000°C, the uniform sheath strain remains less than 5% (References 19 and 20).
3. No significant cracks in the surface oxide.

   A fuel element will not fail due to significant cracks in the surface oxide if, for sheath temperatures greater than 1000°C, the uniform sheath strain remains less than 2%.
4. No oxygen embrittlement (Reference 21).

   A fuel element will not fail due to oxygen embrittlement if the oxygen concentration remains less than 0.7 wt% over half the sheath thickness. The possibility of sheath failure due to oxygen embrittlement can be determined based on sheath temperature and time. Table 6, based on Reference 21 shows the criteria used to determine whether failure due to oxygen embrittlement occurs.
5. No sheath failure because of beryllium-braze penetration at bearing pad or spacer pad locations (Reference 22).

   The fuel sheath is assumed to fail if the probability of beryllium-braze-assisted crack penetration of the sheath modeled by ELOCA reaches 100%.

The transient fuel centerline temperature, the sheath strain and corresponding sheath temperature are calculated by the ELOCA code, as is the probability of beryllium-braze penetration.

## 5.3 Fission Product Release

The gap inventories are assumed to be released when the fuel elements fail. The entire gap inventory accumulated during normal operating conditions is released upon sheath failure.

Due to the different power level of each channel in the whole core, the fission-product release is different from one channel to another. To simplify the calculations of fission-product release, the following assumptions are made:

- The fuel geometry is assumed unchanged in the CATHENA simulations.
- The channels in the core are separated into several groups according to their power levels within the ACR-700 reactor core. Each channel in one group is assumed to have the same fission-product release as the highest power channel in the group. A better accuracy can be achieved by a more detailed partition, which will be applied for assessing limited core damage events.

Calculation of the transient fission-product release from the gap, grain-boundary and grain-bound inventory is composed of three steps:

- estimate the number of fuel elements expected to fail and their times of failure in similar power/burnup conditions from ELOCA simulation with the methodology in Section 5.2; and
- estimate the total fission product inventories and distribution in the fuel elements in the reactor core for different power/burnup combinations at the time of the accident using the ORIGEN-S, ELESTRES, and SOURCE calculations; and

- estimate the transient fission-product release from failed fuel elements with SOURCE.
- The analysis methodology used to calculate the release of fission products from the each fuel pin in the long term is based on the fission-product inventory of the failed fuel elements.

## 6. REFERENCES

[1] C. Xu and C. Nie, "Safety Basis for ACR", 108-03600-AB-003, Rev. 0, July 2003.

[2] L. Bratu, "Initial Conditions and Standard Assumptions Safety Analysis Basis", 10810-03510-AB-001, Rev 0, August 2003.

[3] C-6, "Draft Regulatory Guide – Safety Analysis of CANDU Nuclear Power Plants", Rev. 1, AECB, September 1999.

[4] R-8, "Requirements for Shutdown Systems for CANDU Nuclear Power Plants", AECB, February 1991.

[5] R-9, "Requirement for Emergency Core Cooling Systems for CANDU Nuclear Power Plants", AECB, February 1991.

[6] R-10, "The Use of Two Shutdown Systems in Reactors", AECB, January 1977.

[7] CNSC Report RSP-51, "Application of Event Tables", R.A. Brown and Associates Ltd., May 30, 1997 (RABA 9703).

[8] H.E. Rosinger, R.S.W. Shewfelt, M.G. Wright, "An Examination of the Anisotropy Characteristics of CANDU Pressure Tubes at 773-1173 K", Atomic Energy of Canada Limited Report, WNRE-385, 1980 June.

[9] R.S.W. Shewfelt et al, "A High Temperature Creep Model For Zr-2.5 Wt% Nb Pressure Tubes", Atomic Energy of Canada Limited Report, AECL-8156, 1983 November.

[10] R.S.W. Shewfelt, D.P. Godin, L.W. Lyall, "Verification of a High Temperature Transverse Creep Model for Zr-2.5 Wt% Nb Pressure Tubes", Atomic Energy of Canada Limited Report, AECL-7813, 1984 January.

[11] R.D. Page, "Canadian Power Reactor Fuel", AECL-5609, March 1976.

[12] V.J. Langman et al, "Recent CANDU Transient Fuel Behaviour Data from Research Reactor Irradiations", AECL-7415, 1982 May.

[13] M.G. Jonckheere, M.R. Floyd and L.W. Dickson "Review Of Dryout Experiments: DME-192 And DME-194", COG-99-233, August 2000.

[14] K. Sapple, *et al,* "ACR-700 Technical Description", 10810-01371-TED-001, Rev. 0, June 2003.

[15] H. Fan, "CATHENA Single Channel Model", 10810-03500-AR-001, September 2002.

[16] D.S. Cox, C.E.L. Hunt, Z. Liu, F.C. Iglesias, N.A. Keller, R.D. Barrand and R.F. O'Connor, "A model for the Release of Low-Volatility Fission Products in Oxidizing Conditions", AECL-10440, July 1991.

[17] O.W. Hermann and R.M. Westfall, "ORIGEN-S: SCALE System Module to Calculate Fuel Depletion, Actinide Transmutation, Fission-Product Buildup and Decay, and Associated Radiation Source Terms", NUREG/CR-0200, Rev. 4, Vol. 2, Sec. F7, ORNL/NUREG/CSD-2/V2/R6, September 1998.

[18] M. Tayal, et al, "Dryout Fuel Behaviour in Loss of Regulation Accident Conditions of a CANDU 600 MW(e) Reactor", Atomic Energy of Canada Limited Report, TTR-61, September 1983.

[19] AECL (M.R. Matthias) submission to the AECB (J.P. Marchildon, B.M. Ewing), 82-03-01 with attachment by E. Kohn, ‘‘Use of 5 Percent Uniform Sheath Strain for Activity Release Predictions”.

[20] C.E.L. Hunt, “The Limit of Uniform Strain, or Onset of Ballooning, in Fuel Sheath Ballooning Tests”, Atomic Energy of Canada Limited Report, CRNL-1187, 1974 September.

[21] A. Sawatzky, “A Proposed Criterion for the Oxygen Embrittlement of Zircaloy-4 Cladding”, Zirconium in the Nuclear Industry (Fourth Conference), ASTM STP 681, American Society For Testing and Materials, 1979, pp. 479-496.

[22] E. Kohn, S. Sagat, “Beryllium Assisted Cracking of Zircaloy”, 6th Canadian Fracture Conference, Harrison Hot Springs, B.C., Canada, 1982 June.

**Table 1**
**Fuel Channel Components**

| Geometric Constant | | Value | Unit |
|---|---|---|---|
| Fuel Pellet Radius | - Center Pin and Inner Ring | 0.006290 | m |
| | - Two Outer Rings | 0.005325 | m |
| Fuel Sheath Outer Radius | - Center Pin and Inner Ring | 0.00675 | m |
| | - Two Outer Rings | 0.00575 | m |
| Fuel Sheath Thickness | - Center Pin and Inner Ring | 0.00044 | m |
| | - Two Outer Rings | 0.00039 | m |
| Pitch circle radius: Outer (21 elements) | | 0.04385 | m |
| Pitch circle radius: Intermediate (14 elements) | | 0.03075 | m |
| Pitch circle radius: Inner (7 elements) | | 0.01735 | m |
| Pitch circle radius: Centre (1 element only) | | 0.00000 | m |
| Fuel Bundle Length | | 0.4953 | m |
| PT Inner Radius | | 0.05169 | m |
| PT Wall Thickness | | 0.0065 | m |
| CT Inner Radius | | 0.0755 | m |
| CT Wall Thickness | | 0.0025 | m |
| Length of PT or CT | | 5.9436 | m |

**Table 2**
**ACR Fuel Enrichments**

| Element Ring | Number of Element | Fuel configuration |
|---|---|---|
| Outer | 21 | SEU 2.1% |
| Intermediate | 14 | SEU 2.1% |
| Inner | 7 | SEU 2.1% |
| Center | 1 | NU + 7.5%Dy |

SEU: Slightly Enriched Uranium

NU: Natural Uranium

Dy: Dysprosium

**Table 3**
**Decay Power Curve**

| Time (s) | Fraction of the Full Power | Time (s) | Fraction of the Full Power |
|---|---|---|---|
| 0.0 | 1.00000 | 2.0 | 0.12149 |
| 0.2 | 0.99973 | 5.0 | 0.09542 |
| 0.34 | 0.99944 | 10.0 | 0.07656 |
| 0.45 | 0.99662 | 20.0 | 0.06240 |
| 0.53 | 0.98416 | 30.0 | 0.05561 |
| 0.60 | 0.95491 | 40.0 | 0.05135 |
| 0.66 | 0.91128 | 50.0 | 0.04843 |
| 0.709 | 0.85997 | 60.0 | 0.04619 |
| 0.757 | 0.79713 | 70.0 | 0.04441 |
| 0.806 | 0.72685 | 80.0 | 0.04301 |
| 0.854 | 0.65758 | 90.0 | 0.04183 |
| 0.903 | 0.58986 | 100.0 | 0.04075 |
| 0.951 | 0.52708 | 110.0 | 0.03984 |
| 1.0 | 0.46690 | 120.0 | 0.03899 |
| 1.048 | 0.41175 | 130.0 | 0.03836 |
| 1.097 | 0.35947 | 140.0 | 0.03778 |
| 1.145 | 0.31240 | 150.0 | 0.03720 |
| 1.194 | 0.26930 | 160.0 | 0.03666 |
| 1.242 | 0.23232 | 170.0 | 0.03617 |
| 1.291 | 0.20057 | 180.0 | 0.03577 |
| 1.339 | 0.17555 | 190.0 | 0.03528 |
| 1.388 | 0.15623 | 500.0 | 0.02530 |
| 1.436 | 0.14276 | 1000.0 | 0.02200 |
| 1.485 | 0.13419 | 5000.0 | 0.01370 |
| 1.534 | 0.12987 | | |
| 1.583 | 0.12855 | | |
| 1.663 | 0.12696 | | |
| 1.763 | 0.12520 | | |

**Table 4**
**ELESTRES Input Data**

| | **Center /Inner** | **Intermediate /Outer** |
|---|---|---|
| Fuel material | $UO_2$ | $UO_2$ |
| $UO_2$ Density (g/cm$^3$) | 10.65 | 10.65 |
| Enrichment (wt% U-235 in U) | 0.71/2.1 | 2.1/2.1 |
| Number of pellets in the fuel element | 30 | 45 |
| Number of dishes per pellet | 2 | 2 |
| Outside diameter of the pellets (mm) | 12.58 | 10.65 |
| Fuel stack length (mm) | 481.1 | 481.1 |
| Sheath material | Zircaloy-4 | Zircaloy-4 |
| Axial gap between fuel stack and sheath (mm) | 2.6 | 2.6 |
| Pellet/sheath diametral clearance mm (mm) | 0.04 | 0.04 |
| Sheath Thickness (mm) | 0.44 | 0.39 |
| $UO_2$ Weight per element (g) | 618.9 | 434.5 |
| Bundle Weight (kg(U)) | 17.8 | 17.8 |

**Table 5**
**SOURCE Input Data**

| Description | Input value |
|---|---|
| Inert gas composition | Helium |
| Number of annuli of each element | 1 |
| $UO_2$ initial grain diameter | 0 |
| $UO_2$ initial stoichiometric deviation | 0 |
| Initial bubble radius | 0 |
| Initial fuel stack length (m) | 0.4811 |
| Center hole radius (m) | 0 |
| Pellet radius – center pin and inner ring (m) | 0.00629 |
| Pellet radius – two outer rings (m) | 0.005325 |
| Mass of Uranium in center pin (kg) | 0.5452 |
| Mass of Uranium in each element of inner ring (kg) | 0.5547 |
| Mass of Uranium in each element of two outer rings (kg) | 0.3870 |
| U-234 mass fraction per ring | 0 |
| U-235 mass fraction in center pin | 0.0071 |
| U-235 mass fraction in inner ring and two outer rings | 0.021 |

**Table 6**
**Simplified Oxygen Embrittlement Failure Criteria**

A fuel element is assumed to fail if:

| | | | | | |
|---|---|---|---|---|---|
| Sheath temperature stays above | 1600°C | (1873K) | For longer than | 0 | seconds |
| Sheath temperature stays above | 1500°C | (1773K) | For longer than | 5 | seconds |
| Sheath temperature stays above | 1470°C | (1743K) | For longer than | 10 | seconds |
| Sheath temperature stays above | 1420°C | (1693K) | For longer than | 20 | seconds |
| Sheath temperature stays above | 1400°C | (1673K) | For longer than | 30 | seconds |
| Sheath temperature stays above | 1300°C | (1573K) | For longer than | 100 | seconds |
| Sheath temperature stays above | 1100°C | (1373K) | For longer than | 1000 | seconds |
| Sheath temperature stays above | 1000°C | (1273K) | For longer than | 10000 | seconds |

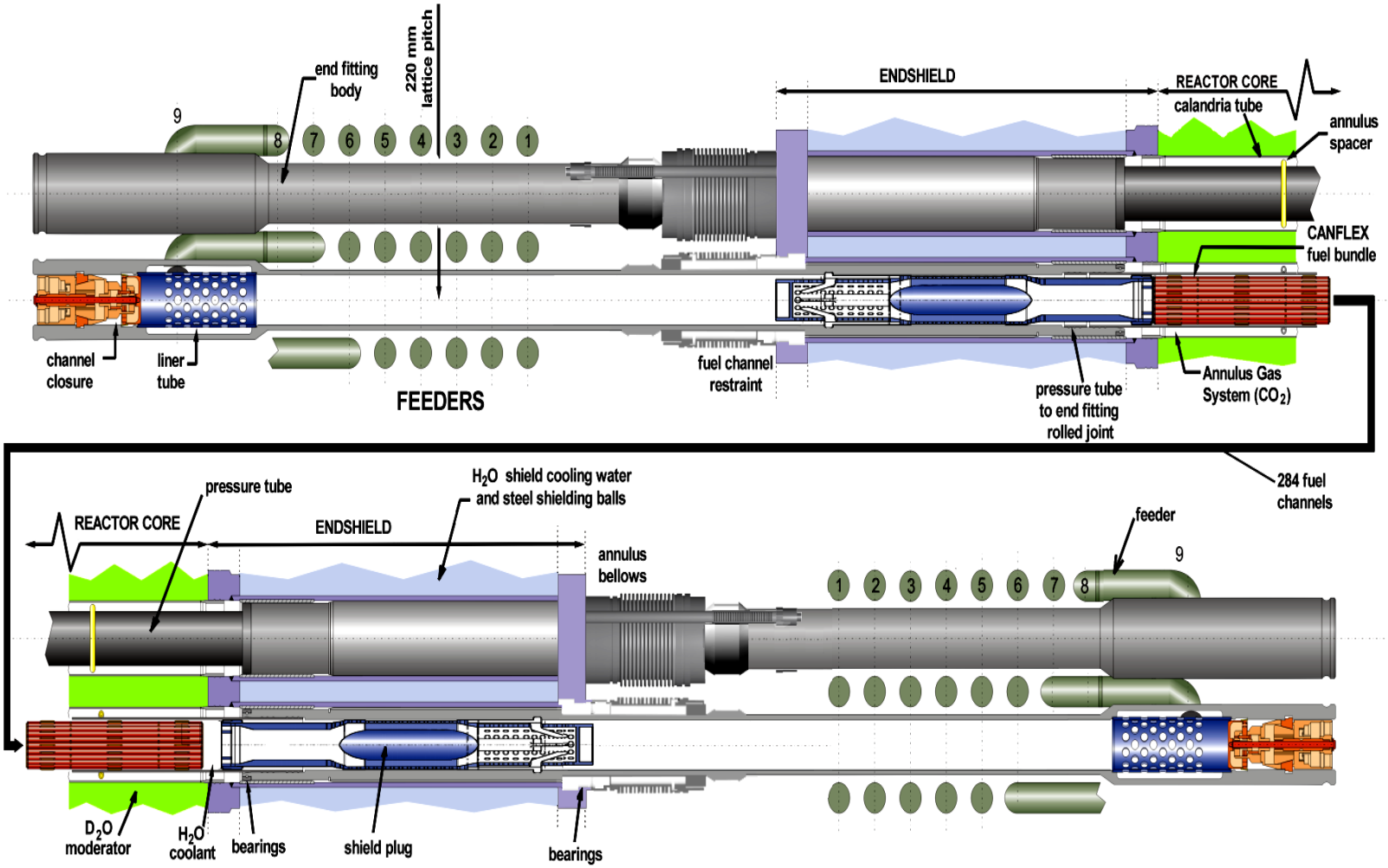


**Figure 1 ACR-700 Fuel Channel Assembly**

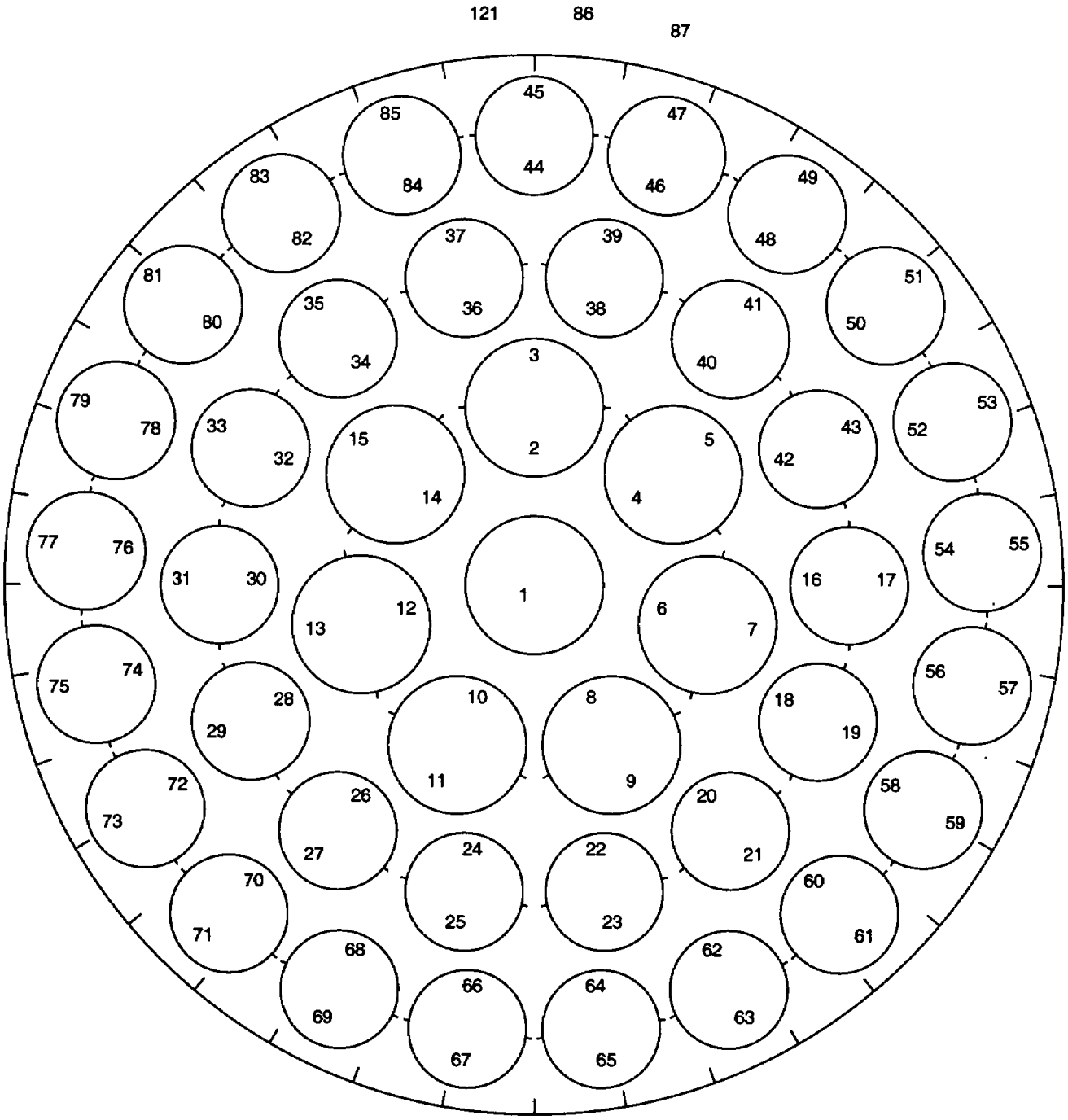


**Figure 2 ACR Fuel Bundle and Fuel Channel Sectorization Used in the CATHENA Single Channel Model**

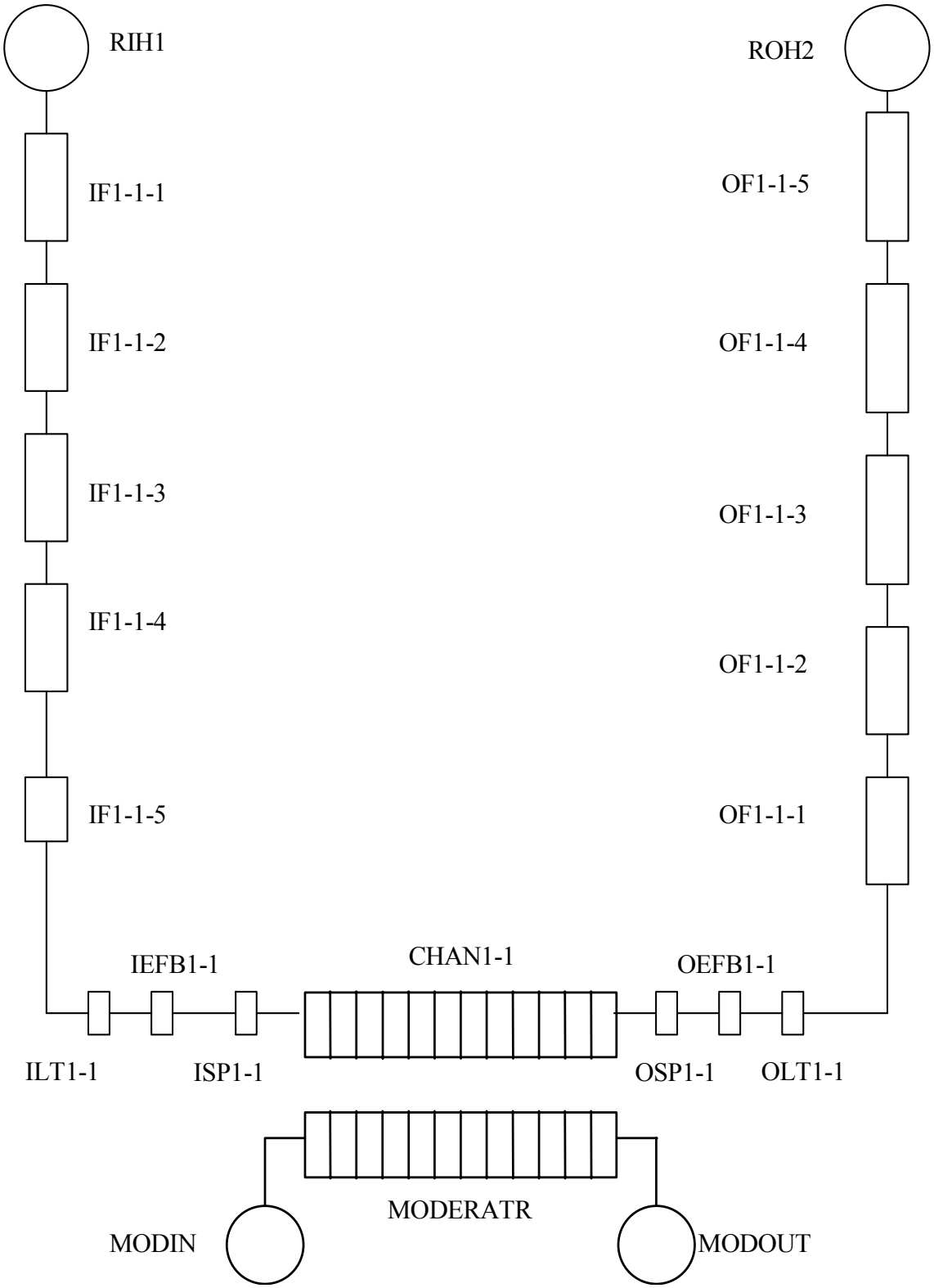


**Figure 3 CATHENA Thermalhydraulic Node-Link Representation of a Single Channel Model**

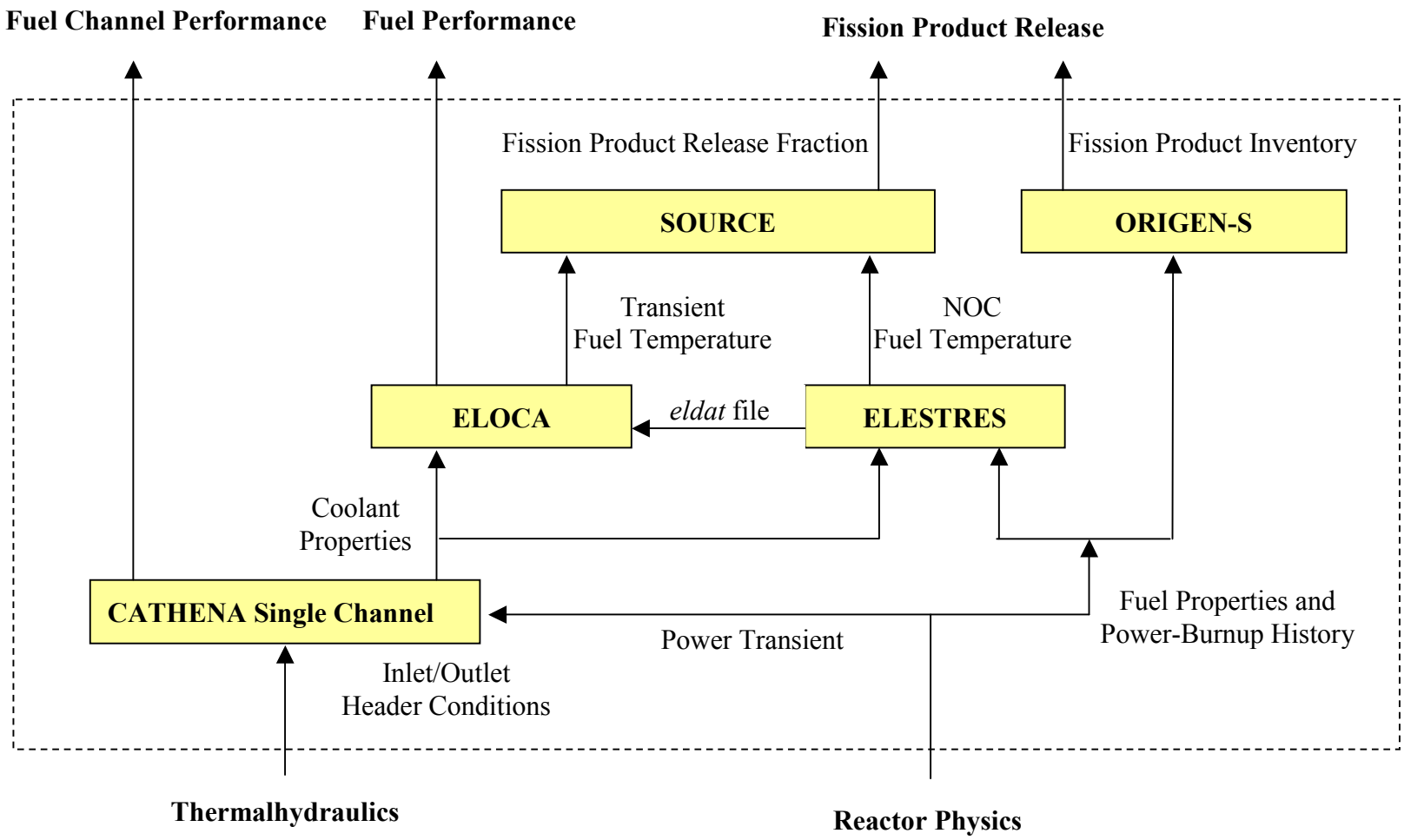


**Figure 4 Computer Tools Used in Fuel and Fuel Channel Safety Analysis**