QA Record

TVA CALCULATION COVERSHEET/CCRIS UPDATE

ORIGINAL

REV 0 EDMS/RIMS NO.	EDMS TYPE:	EDMS ACCESSION NO (N/A for REV. 0)
B87 900310 002	calculations(nuclear)	B87 030115 005

Calc Title: Demonstrated Accuracy Calculation 0-RE-90-102/103

CALC ID	TYPE	ORG	PLANT	BRANCH	NUMBER	CUR REV	NEW REV	REVISION APPLICABILITY
CURRENT	CN	NUC	SQN	EEB	0-RE-90-102/103	0	1	Entire calc ☒ Selected pages ☐
NEW	CN	NUC						

ACTION	NEW ☐ REVISION ☒	DELETE ☐ RENAME ☐	SUPERSEDE ☐ DUPLICATE ☐	CCRIS UPDATE ONLY ☐ (Verifier Approval Signatures Not Required)	No CCRIS Changes ☐ (For calc revision, CCRIS been reviewed and no CCRIS changes required)

UNITS	SYSTEMS	UNIDS
0	090	0-RE-90-102 and 103

DCN,EDC,N/A	APPLICABLE DESIGN DOCUMENT(S)	CLASSIFICATION
EDC ~~20869A~~ 20689A	SQN-DC-V-9.0	E

QUALITY RELATED?	SAFETY RELATED? (If yes, QR = yes)	UNVERIFIED ASSUMPTION	SPECIAL REQUIREMENTS AND/OR LIMITING CONDITIONS?	DESIGN OUTPUT ATTACHMENT?	SAR/TS AFFECTED
Yes ☒ No ☐	Yes ☐ No ☒	Yes ☐ No ☒	Yes ☐ No ☒	Yes ☐ No ☒	Yes ☒ No ☐

PREPARER ID	PREPARER PHONE NO	PREPARING ORG (BRANCH)	VERIFICATION METHOD	NEW METHOD OF ANALYSIS
Larry M. Begley	843-8051	EEB	Design Review	☐ Yes ☒ No

PREPARER SIGNATURE	DATE	CHECKER SIGNATURE	DATE
Larry M Begley	7-19-02	Eddie H. Turner	9/12/2002
VERIFIER SIGNATURE	**DATE**	**APPROVAL SIGNATURE**	**DATE**
Eddie H. Turner	9/12/2002	RK Gladney	9/20/02

STATEMENT OF PROBLEM/ABSTRACT

Problem

Determine the accuracy of the subject instrument loops and demonstrate that the accuracy is adequate for the intended purpose. Primary elements are located in a harsh environment. Subject devices are not part of PAM.

Abstract

Calculations were performed to determine the accuracy of the subject instrument loops. The determined accuracies were compared to the required accuracies, setpoints, safety limits and/or operating limits and the accuracy for the loops listed below were demonstrated to be acceptable for the intended function of the instrument loops. This calculation applies to the instrument loops listed below.

0-R-90-102 & 103

MICROFICHE/EFICHE Yes ☐ No ☒ FICHE NUMBER(S)

☐ LOAD INTO EDMS AND DESTROY
☒ LOAD INTO EDMS AND RETURN CALCULATION TO CALCULATION LIBRARY. ADDRESS:OPS-1B
☐ LOAD INTO EDMS AND RETURN CALCULATION TO:

TVAN CALCULATION COVERSHEET/CCRIS UPDATE

CALC ID	TYPE	ORG	PLANT	BRANCH	NUMBER	REV
	CN	NUC	SQN	EEB	0-RE-90-102/103	1

ALTERNATE CALCULATION IDENTIFICATION					
BLDG	ROOM	ELEV	COORD/AZIM	FIRM	Print Report Yes ☐
CATEGORIES					

KEY NOUNS (A-add, D-delete)

ACTION (A/D)	KEY NOUN	A/D	KEY NOUN

CROSS-REFERENCES (A-add, C-change, D-delete)

ACTION (A/C/D)	XREF CODE	XREF TYPE	XREF PLANT	XREF BRANCH	XREF NUMBER	XREF REV
A	S	DN	SQN	EEB	EDC 20896	A

CCRIS ONLY UPDATES:
Following are required only when making keyword/cross reference CCRIS updates and page 1 of form NEDP-2-1 is not included:

PREPARER SIGNATURE	DATE	CHECKER SIGNATURE	DATE
PREPARER PHONE NO.	EDMS ACCESSION NO.		

TVAN CALCULATION RECORD OF REVISION

Title DEMONSTRATED ACCURACY CALCULATION 0-RE-90-102/103

Revision No.	DESCRIPTION OF REVISION	Date Approved
0	Initial issue. The loops evaluated by this calculation were previously removed from the scope of calculation 0-RE-90-106A. This calculation supports resolution of SQ971511PER. Legibility Evaluated and Accepted for Issue: J. H. Rinne Date 6-7-00 This revision contains 97 pages.	
1	This calculation was revised to incorporate a Safety Limit change defined in reference 6 M/N calculation for resolution of PER 02-003523-000 corrective action item 1. Additionally, the Allowable Value defined within this calculation is being added to the Tech Spec via Tech Spec Change 02-01. Reference 6 M/N calculation defines two Safety Limits based on utilizing either ICRP-2 or ICRP-30 methodology. Utilizing ICRP-30 methodology results in a relaxed or increased value for the Safety Limit. Therefore, utilizing this Safety Limit is desirable. However, NRC approval of Tech Spec Change 02-01 is required prior to use since this topic will be presented within the scope of the Tech Spec Change. Based on the above discussion, this calculation revision will be prepared to support the increased Safety Limit resulting from using ICRP-30 methodology defined within reference 6 M/N calculation. Whereas, an Appendix A will be provided that defines the current plant Setpoint and Allowable Value Limits necessary for compliance with the more restrictive Safety Limit defined within reference 6 M/N calculation based on ICRP-2 methodology until Tech Spec Change 02-01 receives approval by NRC. Pages changed: 1,2,3,4,5,8,20,21,33-48,49-51, Attachment 1 sheets 1 and 2 Note: sheets 33-48 were totally reformatted using MathCAD and do not contain revision bars Pages added: 1A,38A,45A, Appendix A, sheets 1-21, Attachment 9, sheet 1 Pages deleted: Attachment 1 sheet 3 Legibility Evaluated and Accepted for Issue: E. H. Turner for RKG Date 9/20/2002 This revision contains 120 pages.	

TVAN CALCULATION VERIFICATION FORM

Calculation Identifier 0-RE-90-102/103 Revision 1

Method of verification used:

1. Design Review ☒
2. Alternate Calculation ☐
3. Qualification Test ☐

Verifier E.H. Turner Date 9/12/02

Comments:

This revision was performed to incorporate a Safety Limit change for resolution of corrective action item 1 of PER 02-003523-000 and also supports the Allowable Value defined within Tech Spec Change 02-01. All comments between myself and the preparer have been resolved. This calculation revision is found to be in compliance with NEDP-2. The FSAR compliance review has been performed as denoted by incorporation of the review form. Additionally, the methodology utilized in this revision of the calculation is commensurate with the guidelines provided in Branch Technical Instruction EEB-TI-28, R5.

FSAR COMPLIANCE REVIEW

This review has been performed to verify FSAR compliance. The following FSAR sections have been reviewed:

5.2.7.1, 11.4.2.2, 12.1.4, and 12.2.4

Tech Specs 3/4.3.1, 3/4.3.3, and 3/4.4.6

Results of review:

The SAR is impacted by issuance of this calculation.

Note: Tech Spec Table 3.3-6 and FSAR section 11.4.2.2.3 both specify a setpoint value of ≤ 200 mR/hr. This setpoint is not conservative with respect to the results of this calculation since a new setpoint of ≤ 105.61 mR/hr is required. However, Plant Chemistry's procedure 0-SI-ICC-090-102.A maintains the setpoint at 50 mR/hr. This condition is addressed within PER 02-003523-000. Therefore, the current Tech Spec and Safety Limit are both satisfied.

This calculation also defines an Allowable Value. The existing setpoint of ≤ 200 mR/hr in Tech Spec Table 3.3-6 will be replaced with the Allowable Value via Tech Spec Change 02-01.

Prepared: L M Coeyl Date: 9/12/02

Checked: E. H. Turner Date: 9/12/02

SEQUOYAH NUCLEAR PLANT
BRANCH/PROJECT IDENTIFIER 0-RE-90-102/103

TABLE OF CONTENTS

A. COVER SHEET 1

B. REVISION LOG 2

C. DESIGN VERIFICATION FORM 3

D. FSAR COMPLIANCE REVIEW 4

D. TABLE OF CONTENTS 5

1) PURPOSE 6

2) ASSUMPTIONS/REQUIREMENTS 6

3) SOURCE OF DESIGN INPUT INFORMATION (REFERENCES) 7-8

4) DESIGN INPUT DATA
- 4.1) DEFINITIONS & ABBREVIATIONS 9-12
- 4.2) LOOP COMPONENT LIST 13
- 4.3) LOOP FUNCTIONS, REQUIREMENTS & LIMITS 14
- 4.4) COMPONENT DATA 15-18
- 4.5) COMPONENT DATA NOTES 19-26

5) DOCUMENTATION OF ASSUMPTIONS 27

6) COMPUTATIONS/ANALYSES
- 6.1) PROCESS UNCERTAINTY DISCUSSION/CALCULATION 28
- 6.2) WATERLEG UNCERTAINTY DISCUSSION/CALCULATION 29
- 6.3) ACCURACY DISCUSSION 30-31
- 6.4) ACCURACY CALCULATION INDEX & CALCULATIONS 32-48

7) SUPPORTING GRAPHICS
- 7.1) LOOP DIAGRAM 49

8) SUMMARY OF RESULTS 50-51

9) CONCLUSIONS 52

10) Appendix A 53 R1

Rev	1	Prep	LMB	Date	7-19-02	Check	EHT	Date	9/11/02	Sheet 5	c/o 6
Rev		Prep		Date		Check		Date		Sheet	c/o
Rev		Prep		Date		Check		Date		Sheet	c/o

SEQUOYAH NUCLEAR PLANT
BRANCH/PROJECT IDENTIFIER 0-RE-90-102/103

1) PURPOSE

The purpose of this calculation is a) to determine the accuracy of the instrumentation covered by this calculation, and b) to demonstrate that the instrumentation is sufficiently accurate to perform its intended function without safety or operational limits being exceeded.

2) SPECIAL CONDITIONS

2.1) ASSUMPTIONS

X This calculation contains no assumptions.

NA The following assumptions were used in the performance of this calculation. These assumptions require further analysis. This calculation may require revision if the assumptions below are shown to be invalid.

2.2 REQUIREMENTS

1) A Digital Volt Meter shall be used for calibration of the output device.

2) M&TE accuracy shall be better than or equal to one (1) times the accuracy of the device being calibrated.

3) The calibration cycle shall not exceed 18 months plus an allowable 25% extension (22.5 months).

2.3 SPECIAL REQUIREMENTS

NONE

2.4 LIMITING CONDITIONS

NONE

SEQUOYAH NUCLEAR PLANT
BRANCH/PROJECT IDENTIFIER 0-RE-90-102/103

3) SOURCE OF DESIGN INPUT INFORMATION (REFERENCES)

REF #	ATT #	REFERENCE (RIMS NO.)
1		1,2-47W600-2, R4
2		TVA Contract 72C61-92759 (General Atomics)
3		Design Criteria SQN-DC-V-21.0 (R13), " Environmental Design"
4		1,2-47W605-1, R10
5		Calculation 72186 RDM, R/0 "A Review of Electronic Components in a Radiation Environment of $\leq 5 \times 10^4$ RADS" (B43860721903)
6	1	TI-RPS-181, R3 "Basis For Determining an Acceptable Setpoint For the Spent Fuel Radiation Monitor Setpoint" R1
7		EEB-TI-28, R5 (B43000229001) "Setpoint Calculations"
8	2	General Atomics Manual for RD-1 E-115-185, Rev. 0, August 1973
9	3	SQNAPS3-100 "Demonstrated Range for the SQNP Radiation Monitors, Rev.12
10	4	General Atomics Manual Model RP-1, E-115-184, Rev. 2, June 1991
11	5	Letter to W. S. Raughley, TVA from Noel A. Seefeldt/Don Peat 3-16-90 (B26900330903)
12		Master Equipment List (MEL)

SEQUOYAH NUCLEAR PLANT
BRANCH/PROJECT IDENTIFIER 0-RE-90-102/103

3). SOURCE OF DESIGN INPUT INFORMATION (REFERENCES) (CONTINUED)

REF #	ATT #	REFERENCE (RIMS NO.)
13	6	Letter from Noel Seefeldt Representative for General Atomics/Sorrento 4-16-90 (B26900511900)
14		TVA Contract 91NNA-75801A
15	7	Letter from DL Koehl to MC Brickey for area radiation monitor SSDs, 7/17/90
16	8	General Atomics Radiation Monitoring Qualification Test Report, E-255-999, August 1981
17		SQN-OSG7-0033 Radiation Monitoring System NUREG 0588 Category and Operating Times, R13
18		Design Criteria SQN-DC-V-9.0 (R13), "Radiation Monitoring System"
19		Demonstrated Accuracy Calculation RE-90-275, R2
20		Demonstrated Accuracy Calculation 0-RE-90-106A, R11
21		Tech Spec Change TVA-SQN-TS-02-01 R1
22	9	Previous Calculation Cover Sheet(s)

4) DESIGN INPUT DATA

4.1) DEFINITIONS AND ABBREVIATIONS

Aa	ACCIDENT ACCURACY-ACCURACY OF A DEVICE IN A HARSH ENVIRONMENT CAUSED BY AN ACCIDENT
Aas	COMBINED ACCIDENT AND SEISMIC ACCURACY
Ab	ACCEPTANCE BAND-THE RANGE OF VALUES AROUND THE CORRECT VALUE DETERMINED TO BE ACCEPTABLE WITHOUT RECALIBRATION
AB	AUXILIARY BOILER LINE BREAK
AF	AFW PUMP TURBINE STEAM SUPPLY LINE BREAK
AL	ANALYTICAL LIMIT
An	NORMAL ACCURACY-ACCURACY OF A DEVICE LOCATED IN A ENVIRONMENT NOT AFFECTED BY AN ACCIDENT OR ACCIDENT OR PRIOR TO AN ACCIDENT
As	POST-SEISMIC ACCURACY
AV	ALLOWABLE VALUE
CPM	COUNTS PER MINUTE
CV	CVCS LETDOWN LINE BREAK
De	DRIFT INACCURACY
Ebs	BISTABLE INACCURACY
Ect	CURRENT TRANSMISSION INACCURACY
Eed	ENERGY DEPENDENCE INACCURACY
Efa	FIELD ALIGNMENT ERROR

4) DESIGN INPUT DATA

4.1) DEFINITIONS AND ABBREVIATIONS (CONTINUED)

Eimp	IMPRECISION- THE STATISTICAL UNCERTAINTY RESULTING FROM UNKNOWN RADIATION ENERGY LEVEL CONCENTRATIONS, WHICH AFFECT DETECTOR EFFICIENCY, COUPLED WITH THE RESPONSE TIME OF THE RATEMETER ELECTRONICS
Encr	NET COUNT INACCURACY
Epc	PRIMARY CALIBRATION ERROR
HELB	HIGH ENERGY LINE BREAK
IAD	INTEGRATED ACCIDENT DOSE
ICRe	INPUT TEST INSTRUMENT READING INACCURACY
ICTe	INPUT TEST INSTRUMENT CALIBRATION INACCURACY
INDRe	INDICATOR READING ERROR
INDMe	INDICATOR MOVEMENT ERROR
IRe	INACCURACY DUE TO CABLE LEAKAGE
ISRe	INPUT SOURCE RESISTANCE EFFECT
L	LOSS OF COOLANT ACCIDENT OR LOCA
M	MARGIN-THE DIFFERENCE BETWEEN THE SAFETY LIMIT/OPERATING LIMIT AND THE NORMAL/ACCIDENT ACCURACY (Mn=NORMAL MARGIN, Ma=ACCIDENT MARGIN)
MFe	MAGNETIC FIELD EFFECT
mR/hr	MILLIREMS PER HOUR

4) DESIGN INPUT DATA

4.1) DEFINITIONS AND ABBREVIATIONS (CONTINUED)

N/A	NOT APPLICABLE
OCRe	OUTPUT TEST INSTRUMENT READING INACCURACY
OPe	OPERATING POSITION EFFECT
OCTe	OUTPUT TEST INSTRUMENT CALIBRATION INACCURACY
PRCSe	PROCESS UNCERTAINTY
PSEe	INACCURACY DUE TO POWER SUPPLY VARIATIONS
PV	PROCESS VALUE (ACTUAL)
RADe	INACCURACY DUE TO ACCIDENT RADIATION EXPOSURE
Re	REFERENCE ACCURACY
RH	RHR LINE BREAK
RNDe	NORMAL RADIATION DOSE BETWEEN CALIBRATIONS
Se	INACCURACY FOLLOWING A SEISMIC EVENT
SECu	SPAN ERROR CORRECTION UNCERTAINTY
SL	SAFETY LIMIT
SP	SET POINT
SPEe	ZERO ERROR DUE TO EFFECTS OF OPERATING PRESSURE
TAe	TEMPERATURE EFFECT AT ACCIDENT CONDITIONS
TID	TOTAL 40 YEARS INTEGRATED DOSE
TNe	TEMPERATURE EFFECT IN THE MAXIMUM/MINIMUM ABNORMAL TEMPERATURE RANGES

4) DESIGN INPUT DATA

4.1) DEFINITIONS AND ABBREVIATIONS (CONTINUED)

TPRe	TEST POINT RESISTOR ERROR
WLe	WATERLEG UNCERTAINTY
WLHP	WATERLEG HIGH POINT
WLLP	WATERLEG LOW POINT

4) DESIGN INPUT DATA

4.2) LOOP COMPONENT LIST

LOOP ID#	COMPONENT ID#
0-R-90-102	0-RE-90-102 0-RM-90-102 0-RI-90-102
0-R-90-103	0-RE-90-103 0-RM-90-103 0-RI-90-103

4) DESIGN INPUT DATA

4.3) LOOP FUNCTION

These loops are used to monitor gross radioactivity of the air space above the fuel pool area. When either of these redundant monitors detect a radiation level in the fuel pool area in excess of the setpoint, the monitors initiate isolation of the auxiliary building ventilation exhaust and startup of the auxiliary building gas treatment system (ABGTS). Reference 18.

LOOP REQUIREMENTS AND LIMITS:

RESPONSE TIME:
Based on the operators actions the process would change slowly with respect to the response time of the instruments electronics.

SAFETY LIMIT (Control Function and Alarm from Reference 6):
271.62 mR/hr (ICRP-2 methodology - refer to Appendix A computations) R1
375.49 mR/hr (ICRP-30 methodology; applicable after NRC approval of TSC 02-01)

INDICATED RANGE:
10^{-1} to 10^{4} mR/hr
(Reference 9)

Per reference 9 the required range for area radiation monitors is
10^{-1} to 10^{4} mR/hr.

SETPOINT (BISTABLE):
Radiation monitoring setpoints will vary over the fuel cycle of the plant, however the error values will be given as constant and will not vary based on the setpoint. The setpoint for this loop is controlled by Chemistry but must be maintained at ≤ 105.61 mR/hr (refer to Appendix A) for Tech Spec Compliance based on a Safety Limit of 271.62 mR/hr prior to NRC approval of Tech Spec Change 02-01. R1

The setpoint, after NRC approval of reference 21 Tech Spec Change for a Safety Limit of 375.49 mR/hr, is ≤ 151 mR/hr. This calculation defines an Allowable Value that will replace the setpoint of ≤ 200 mR/hr defined in Tech Spec table 3.3-6 via Tech Spec Change 02-01.

SEQUOYAH NUCLEAR PLANT
BRANCH/PROJECT IDENTIFIER 0-RE-90-102/103

4) DESIGN INPUT DATA
4.4) COMPONENT DATA

VALID FOR DEVICES IDENTIFIED ON SHEETS: 13

COMPONENT: 0-RE-90-102/103 CONTRACT #: 72C61-92759 REFERENCE #: 12

MANUFACTURER/MODEL: GENERAL ATOMICS/RD-1 REFERENCE #: 2, 8

INPUT RANGE & UNITS: 10^{-1}-10^{4} mR/HR NOTE #: NA REFERENCE #: 8

OUTPUT RANGE & UNITS: PULSE SIGNALS NOTE #: 11 REFERENCE #: 8,11

OVERRANGE LIMIT: NA NOTE #: NA REFERENCE #: 8

CALIBRATED SPAN: 10^{-1} -10^{4} mR/HR NOTE #: NA REFERENCE #: 8

ROOM # / PANEL #: A13 / Fuel Pool Area NOTE #: NA REFERENCE #: 3

ELEVATION / COORDINATE: 734' / XA8 NOTE #: NA REFERENCE #: 1

MIN / MAX ABNORMAL TEMP: 40°F / 110°F NOTE #: NA REFERENCE #: 3

ACCIDENT TEMPERATURE: 110°F NOTE #: NA REFERENCE #: 3

RADIATION TID (RAD): 3.5 X 10^{4} RADS NOTE #: NA REFERENCE #: 3

RADIATION IAD (RAD): 2.09 x 10^{3} RADS NOTE #: NA REFERENCE #: 3

INSTRUMENT TAP INFORMATION REFERENCE #: NA

WLHP TAP ELEVATION: NA WLHP CONDENSING POT ELEVATION: NA

WLLP TAP ELEVATION: NA WLLP CONDENSING POT ELEVATION: NA

EVENT / CATEGORY / OPERATING TIME: NOTE #: NA REFERENCE #: 17

NA / NA / NA

NA / NA / NA

NA / NA / NA

NA / NA / NA

NA / NA / NA

Rev	0	Prep	LMB	Date	5/9/00	Check	EHT	Date	5/12/00	Sheet	15	c/o	16
Rev		Prep		Date		Check		Date		Sheet		c/o	
Rev		Prep		Date		Check		Date		Sheet		c/o	

SEQUOYAH NUCLEAR PLANT
BRANCH/PROJECT IDENTIFIER 0-RE-90-102/103

4) DESIGN INPUT DATA
4.4) COMPONENT DATA

VALID FOR DEVICES IDENTIFIED ON SHEETS: 13

COMPONENT: 0-RM/RI-90-102/103 CONTRACT #: 72C61-92759 REFERENCE #: 12

MANUFACTURER/MODEL: SORRENTO ELECTRONIC / RP-1 REFERENCE #: 12

INPUT RANGE & UNITS: SEE NOTE NOTE #: 11 REFERENCE #: 10

OUTPUT RANGE & UNITS: SEE NOTE NOTE #: 12 REFERENCE #: 10

OVERRANGE LIMIT: NA NOTE #: NA REFERENCE #: NA

CALIBRATED SPAN: 0-10 Vdc NOTE #: NA REFERENCE #: 10

ROOM # / PANEL #: MCR/0-M-12 NOTE #: NA REFERENCE #: 12

ELEVATION / COORDINATE: 732'/C6-P NOTE #: NA REFERENCE #: 4

MIN / MAX ABNORMAL TEMP: 60°F / 104°F NOTE #: NA REFERENCE #: 3

ACCIDENT TEMPERATURE: 104°F NOTE #: NA REFERENCE #: 3

RADIATION TID (RAD): 3.5×10^2 RADS NOTE #: NA REFERENCE #: 3

RADIATION IAD (RAD): $<5 \times 10^0$ RADS NOTE #: NA REFERENCE #: 3

INSTRUMENT TAP INFORMATION REFERENCE #: NA

WLHP TAP ELEVATION: NA WLHP CONDENSING POT ELEVATION: NA

WLLP TAP ELEVATION: NA WLLP CONDENSING POT ELEVATION: NA

EVENT / CATEGORY / OPERATING TIME: NOTE #: NA REFERENCE #: 17

NA / NA / NA

NA / NA / NA

NA / NA / NA

NA / NA / NA

NA / NA / NA

Rev	0	Prep	LMB	Date	5/9/00	Check	EJT	Date	5/12/00	Sheet	16	c/o	17
Rev		Prep		Date		Check		Date		Sheet		c/o	
Rev		Prep		Date		Check		Date		Sheet		c/o	

SEQUOYAH NUCLEAR PLANT
BRANCH/PROJECT IDENTIFIER 0-RE-90-102/103

4) DESIGN INPUT DATA
4.4) COMPONENT DATA (CONTINUED)

COMPONENT: RE/RM/RI-90-102/103

PARAMETER	VALUE/UNITS	NOTE #	REFERENCE #
Encr	±14% of reading	1	11,19
Eed	±15% of reading	3	13
Eimp	±40.59% of reading	4	7,8,10,9
Ebs	±1% of reading	5	13
Ect	NA	6	8,10,19
Epc	±5% of reading	7	11
Re	±3% of FS	13	10
TPRe	NA	10	NA
ICTe	±0.1% of FS (bistable) ±4% of reading(ratemeter)	14,15	11,15,20
ICRe	±4% of reading	14	11,15,20
OCTe	±0.1% of FS ratemeter & indicator	15	NA
OCRe	NA	16	NA
Ab	±3% of FS (bistable & indicator) ±3% of FS (ratemeter & ratemeter/detector)	2	3,7,10,11,15
Se	NA	20	16
RNDe	NA	17	3,5
RADe	NA	17	3,5
TAe	NA	18	8,11
WLe	NA	21	NA
PRCSe	NA	22	NA
INDRe	-1.58 of span +1.94% of span	9	7
IRe	NA	19	3
TNe	±0.1% of FS/ °C Included in Re	2	3,7,10,11,15
INDMe	±2% of FS (indicator)	8	13

R1

SEQUOYAH NUCLEAR PLANT
BRANCH/PROJECT IDENTIFIER 0-RE-90-102/103

4) DESIGN INPUT DATA
4.4) COMPONENT DATA (CONTINUED)

COMPONENT: RE/RM/RI-90-102/103

Efa	NA	25	11
Ebd	+11.08% of reading -10.89% of reading	23	19
Efac	±5% of reading	24	11

4) DESIGN INPUT DATA

4.5) COMPONENT DATA NOTES

COMPONENT: RE/RM/RI-90-102/103

#	NOTE
1	Encr is defined in reference 11 as detector environment with an accuracy of ±14% of reading. Therefore, Encr = ±14% of reading
2	Per reference 10, the ratemeter reference accuracy is ±3% of equivalent linear full scale. All of the ratemeter errors are encompassed by this 3% error (Reference 11). This includes calibration inaccuracies, temperature effect, environmental effects and inherent equipment inaccuracies. Reference 10 states that temperature effect is ±0.1% of equivalent linear full scale / °C. The ratemeter is located in the main control room, where the maximum temperature excursion is 16°C to 40°C (reference 3). This would yield a temperature effect of: Temp. Effect = ±(40 - 16C) × 0.1% × 10V = ±0.24 V Excluding this temperature effect would result in an inaccuracy of (0.3V - 0.24V = 0.06V). This 0.06V would still include other inaccuracies in addition to the reference accuracy. Per TI-28 (Reference 7), the acceptance band (Ab) should be at least equal to the reference accuracy. If the entire 0.06V were attributed to reference accuracy, Ab would equal 0.6% of equivalent full scale. However, to add more conservatism and minimize impact to existing plant procedures, Ab for the ratemeter and ratemeter/detector will be set equal to ±3.0% of equivalent full scale, while the Ab for the bistable and the indicator will also be set equal to ±3.0% of equivalent full scale. This value bounds the Ab value defined in reference 15 which states that the bistable and indicator have been repeatedly calibrated to ±0.1V (1.0%).
3	Per reference 13 the vendor states the energy dependence (Eed) inaccuracy as ±15% of reading from 70keV to 2MeV. Therefore the vendor number of Eed= ±15% of reading is valid.

4) DESIGN INPUT DATA
4.5) COMPONENT DATA NOTES

COMPONENT RE/RM/RI-90-102/103

#	NOTE
4	Statistical uncertainty associated with counting the nuclear eventwill be greatest for the lowest countrate assuming equal time for counting. Imprecision is determined by calculating the standard deviation:

$$\sigma = \sqrt{R/T}$$

where R = countrate in cpm × detector sensitivity]
T = 2RC (RC = time constant ofratemeter)
(RC varies withcountrate)

The setpoint will be determined by Chemistry for this loop and may vary during the fuel cycle of the plant. The sensitivity of the RD-1 detector as given in reference 8 is 120 cpm per mR/hr. Using the time constants given in reference 10, precision was calculated over a range that will bound the setpoint. The following tabular data has been developed to identify the following terms for setpoints that vary from 10 to 1000 mR/hr. Whereas the maximum setpoint defined by this calculation is 151mR/hr. R1

$$\sigma = \sqrt{\frac{Setpoint \times 120}{2RC}}$$

For a setpoint of 151mR/hr;

$$\sigma = \sqrt{\frac{151(120)}{2(.00067)}}$$

σ = 3677.28 cpm
2σ = 7354.56 cpm

% Error = (2σ/(Setpoint x 120)) x 100
% Error = (7354.56 / (151 x 120)) x 100
% Error = 40.59

Setpoint + Error (mR/hr) = 151+ (2σ / 120) = 212.29 mR/hr
or;
Error = 212.29 - 151= 61.29mR/hr

SEQUOYAH NUCLEAR PLANT
BRANCH/PROJECT IDENTIFIER 0-RE-90-102/103

4) DESIGN INPUT DATA
4.5)\ COMPONENT DATA NOTES
COMPONENT: RE/RM/RI-90-102/103

NOTE
4 (Continued)

Setpoint (mR/hr)	RC	σ(cpm)	2 σ (cpm)	% Error	Setpoint+ Error (mR/hr)	Error (mR/hr)
10	0.0033	426.40	852.80	71.07	17.11	7.11
20	0.0033	603.02	1206.05	50.25	30.05	10.05
30	0.0033	738.55	1477.10	41.03	42.31	12.31
40	0.0033	852.80	1705.61	35.53	54.21	14.21
50	0.0033	953.46	1906.93	31.78	65.89	15.89
60	0.0033	1044.47	2088.93	29.01	77.41	17.41
70	0.0033	1128.15	2256.30	26.86	88.80	18.80
80	0.0033	1206.05	2412.09	25.13	100.10	20.10
90	0.0033	1279.20	2558.41	23.69	111.32	21.32
100	0.0033	1348.40	2696.80	22.47	122.47	22.47
101	0.00067	3007.45	6014.91	49.63	151.12	50.12
102	0.00067	3022.31	6044.61	49.38	152.37	50.37
103	0.00067	3037.08	6074.17	49.14	153.62	50.62
104	0.00067	3051.79	6103.58	48.91	154.86	50.86
105	0.00067	3066.43	6132.86	48.67	156.11	51.11
106	0.00067	3081.00	6161.99	48.44	157.35	51.35
107	0.00067	3095.50	6190.99	48.22	158.59	51.59
108	0.00067	3109.93	6219.85	47.99	159.83	51.83
109	0.00067	3124.29	6248.58	47.77	161.07	52.07
110	0.00067	3138.59	6277.18	47.55	162.31	52.31
120	0.00067	3278.15	6556.30	45.53	174.64	54.64
130	0.00067	3412.01	6824.01	43.74	186.87	56.87
131	0.00067	3425.10	6850.21	43.58	188.09	57.09
132	0.00067	3438.15	6876.31	43.41	189.30	57.30
133	0.00067	3451.15	6902.30	43.25	190.52	57.52
140	0.00067	3540.81	7081.61	42.15	199.01	59.01
150	0.00067	3665.08	7330.17	40.72	211.08	61.08
151	0.00067	3677.28	7354.56	40.59	212.29	61.29
160	0.00067	3785.28	7570.56	39.43	223.09	63.09
170	0.00067	3901.78	7803.56	38.25	235.03	65.03

R1

4) DESIGN INPUT DATA

4.5) COMPONENT DATA NOTES

COMPONENT RE/RM/RI-90-102/103

NOTE

R1

5 Per Ref. 13, the trip circuit is highly stable and accurate with an absolute accuracy much better than 1% of reading. For conservatism, we will consider bistable error to be 1% or reading.

6 Ect - Current Transmission Error

Current Transmission Error is discussed in calculation 0-RE-90-106A (reference 20) and the information presented is applicable to the monitor loops in this calculation. Therefore, based on the information contained in reference 20, the error associated with current transmission is considered negligible.

7. Primary Calibration Epc)
Primary calibration is a procedure in which an NBS traceable source is used to generate a flux (dose rate) at a specified test location on the GA Technologies calibration range. The flux at this location is measured with a calibrated ION source, whose calibration is traceable to an NBS ION chamber. The ION chamber or GM detector which is undergoing calibration is then positioned at the same test location on the range and the response to the known flux (dose rate) recorded. Thus, each ION chamber and GM detector actually undergo a primary calibration. The error associated with this calibration is ±5% of reading, per Ref. 11.

Epc = ±5% of reading.

4) DESIGN INPUT DATA
4.5) COMPONENT DATA NOTES (CONTINUED)

COMPONENT: RE/RM/RI-90-102/103

#	NOTE
8	Per reference 13, the movement error of the indicator is ±2%. Therefore INDMe = ±2% of full scale. The front panel indicator is not used for calibration of the bistable or computer, a DVM is used for these devices, therefore INDMe is not required for these devices.
9	Reference 7 requires the indicator reading error to be 1/2 the largest division on the scale. The indicator scale is logarithmic which means that the reading error will vary depending on the which part of the decade the reading is taken. To obtain the reading in percentage of span the logarithm must be converted to decades an then to percent of span. The maximum reading error in the positive direction = Log(1.5) -Log(1.0) = 0.176 decades, while the maximum reading error in the negative direction = Log(2.0) - Log(1.5) = 0.124 decades. For the area radiation monitors, the scale is 5 decades (10^{-1} to 10^{4} cpm). Therefore % span error equals:

$$\text{INDRe(+)} = \frac{0.176\frac{\text{decades}}{\text{err}}}{5\,\text{decades}}$$
= 0.035 error
= 3.5% of span

$$\text{INDRe(-)} = \frac{-0.124\frac{\text{decades}}{\text{err}}}{5\,\text{decades}}$$
= -0.025 error
= -2.5% of span

However, as shown by this table the positive and negative reading errors will vary throughout the readings on the decade.

Reading on Decade	% span error
2.0 - 3.0	+1.94% -1.58%
5.0 - 6.0	+0.83% -0.76%
7.0 - 8.0	+0.60% -0.56%
8.0 - 9.0	+0.53% -0.50%

4) DESIGN INPUT DATA
4.5) COMPONENT DATA NOTES (CONTINUED)

COMPONENT: RE/RM/RI-90-102/103

NOTE

9 Cont.

The readability between the 1 and 2 divisions is approximately 10 times better than between 9 and 10, due to the physical size of the scale markings. Therefore, the operator is less likely to make a 1/2 division reading error on the larger scale divisions. Using this reasoning the reading error for the first scale division(between 1.0 and 2.0) will be taken as 1/4 divisions. Therefore positive reading will = Log(1.25) - Log(1.0) = 0.0969 decades, and the negative reading error = Log(1.25) - Log(1.5) = -0.0792 decades. Therefore % span reading error equals:

$$\text{INDRe(+)} = \frac{0.0969 \frac{\text{decades}}{\text{err}}}{5\,\text{decades}}$$

= 0.0194 error
= 1.94% of span

$$\text{INDRe(-)} = \frac{-0.0792 \frac{\text{decades}}{\text{err}}}{5\,\text{decades}}$$

= -0.0158 error
= -1.58% of span

It should be noted that these values for 1/4 division reading error between the 1 and 2 scale divisions are still more conservative than 1/2 division reading errors for the remainder of the decade scale division.

10 The test point resistors used for the calibration of this equipment are internal to the ratemeter and are accounted for in the accuracy, no additional error is needed for TPRe.

11 The RP-1 Area Monitor Ratemeter receives pulse signals from the radiation detector which in this case is a RD-1 Geiger-Mueller Tube and signal conditioning preamplifier. (Reference 11, Section 2.1)

12 Indicator: 10^{-1} to 10^{4} mR/hr
Computer: 0.000 to 0.100 V dc
Alarms: Two (2) DPDT relay contacts
Calibration: 0 to 10 V dc

4) DESIGN INPUT DATA
4.5) COMPONENT DATA NOTES (CONTINUED)

COMPONENT: RE/RM/RI-90-102/103

#	NOTE
13	Per reference 10 the stated vendor reference accuracy is ±3% of equivalent full scale.
14	Per reference 11 an NBS traceable source is used to generate a flux (doserate) at a specified dose location. Per reference 15, for calibration of the ratemeter, frequency calibrated uniform pulses are injected at the ratemeter input. The calibration of the ratemeter uses a pulse generator, counter and timer. Instrument maintenance calibration records (reference 20) have shown that a 4% variance in the desired pulse rate is achievable. Therefore, ICTe and ICRe will be set equal to ±4% of reading.
15	As a requirement of this calculation a digital voltmeter shall be used to read the output for the calibration of the ratemeter and indicator, while the DVM will be used to read the input for the calibration of the bistable. Instrument maintenance currently uses a Keithley 197 DVM which has a stated accuracy of 0.018% input + 0.00024 V over a range of 0-20 V dc. It is reasonable that any new DVMs will have an accuracy at least equal to the current DVMs. Therefore to be conservative an error ±0.1% of full scale will be used for OCTe for the ratemeter, and indicator and ICTe for the bistable.
16	The output reading device for the calibration of these devices is a DVM, which has no reading error. Therefore OCRe is not required.
17	The ratemeter and detector are located in a mild environment where the maximum radiation is 3.5×10^4 RADS (reference 3). Radiation effects are negligible for electronic components in a environment less than 5×10^4 RADS (Reference 5). Therefore RNDe and RADe are not required.
18	Per references 8, the maximum temperature the detector and ratemeter can operate in is 176°F, which is greater than the accident temperature of 110°F. Per reference 11, the reference accuracy includes any effects due to temperature while in the prescribed temperature ranges. Therefore TAe is not required.
19	The ratemeter and detector are located in a mild environment (Reference 3), therefore there is no error due to cable leakage effect.

SEQUOYAH NUCLEAR PLANT
BRANCH/PROJECT IDENTIFIER 0-RE-90-102/103

4) DESIGN INPUT DATA
4.5) COMPONENT DATA NOTES (CONTINUED)

COMPONENT: RE/RM/RI-90-102/103

#	NOTE
20	Per reference 16, GA Seismic report, a seismic event will have no effect on the system. Therefore Se is not required.
21	There is no waterleg error associated with this calculation. (See Section 6.2) WLe is not required.
22	Process uncertainty is accounted for in ~~Encr~~ Encr for this calculation. Therefore PRCSe is not required. LMB 5/12/00
23	Per reference 19, bistable drift has been calculated using Sequoyah field calibration data. Based on this data the drift associated with the bistable is +11.08% and -10.89% of reading.
24	Per reference 11, the factory alignment error, as stated by the vendor, is equal ±5% of reading.
25	Field Alignment (Efa) is the uncertainty associated with calibration of the equipment in the field. The electronics are calibrated to the calibration source. The uncertainty of calibration, i.e., ICTe, ICRe, OaCTe, OCRe, and Ab. Thus field alignment error is not included as a separate term to conform with EEB-TI-28 convention.

5) ASSUMPTIONS

There are no assumptions used in this calculation.

SEQUOYAH NUCLEAR PLANT
BRANCH/PROJECT IDENTIFIER 0-RE-90-102/103

6) COMPUTATIONS/ANALYSES (CONTINUED)
6.1) PROCESS UNCERTAINTY DISCUSSION/CALCULATION (CONTINUED)

X NO PROCESS UNCERTAINTY EXISTS FOR THIS CALCULATION

X THE MEASURED PARAMETER IS THE PARAMETER OF CONCERN; THEREFORE, PROCESS VARIATIONS ARE ACCOUNTED FOR IN THE DETERMINATION OF SAFETY AND/OR OPERATIONAL LIMITS.

__ OTHER: SEE DISCUSSION BELOW.

NA PROCESS UNCERTAINTY DOES EXIST AND IS DETAILED IN THE FOLLOWING DISCUSSION/CALCULATION.

SEQUOYAH NUCLEAR PLANT
BRANCH/PROJECT IDENTIFIER 0-RE-90-102/103

6) COMPUTATIONS/ANALYSES (CONTINUED)
6.2) WATERLEG CALCULATIONS UNCERTAINTY DISCUSSION/CALCULATION

X APPLICABLE TO ALL LOOPS LISTED ON SHEET 13.

NA APPLICABLE ONLY TO LOOPS: _____

X WATERLEG UNCERTAINTY IS NOT CONSIDERED FOR THE CALCULATION BECAUSE:

X NO WATERLEG EXISTS FOR THIS CALCULATION.

NA THE EFFECTS OF WATERLEG CHANGES ARE INSIGNIFICANT. SEE DISCUSSION/CALCULATION BELOW.

NA OTHER SEE DISCUSSION/CALCULATION BELOW.

NA SEE SENSING LINE DIAGRAM ON SHEET __ OF THIS CALCULATION.

6) COMPUTATIONS / ANALYSES (CONTINUED)
6.3) ACCURACY DISCUSSION

X The accuracy of this instrument for normal, post seismic and accident conditions will be determined by considering the parameters tabulated in the design input section of this calculation.

The accuracy calculation for seismic (As) is bounding for all seismic events.

X The square root of the sum of the squares method shall be used in this calculation for calculating accuracy since the factors affecting accuracy are independent variables.

X Bi-directional error and uni-directional error will be combined in a manner such that the sum of the positive uni-directional error will be added to the positive portion of the bi-directional error (obtained from the square root of the sum of the squares method), and the sum of the negative uni-directional errors will be added to the negative portion of the bi-directional error.

This method is conservative. Therefore, it will be used in this calculation.

Example: ±10 = bi-directional error
+ 5 = first uni-directional error
- 2 = second uni-directional error

Total Error = (+10 + 5) to (-10 - 2) = +15 to -12

X All calibration requirements (M&TE accuracies, device acceptance bands, calibration frequency post-seismic calibrations etc.) selected and utilized in this calculation shall be reflected in Section 8 "SUMMARY OF RESULTS (SET POINT AND SCALING) for incorporation into the Set Point and Scaling Document. These values are validated through their use in this calculation when the loop acceptance criteria are met."

NA Other: NOT REQUIRED

NOTE: All systems analysis based on or using accuracy values from this calculation should take into account the fact that operator action and/or automatic initiations may occur at a process value differing from the indicated or setpoint values by the amount of the calculated inaccuracies.

6) COMPUTATIONS/ANALYSES (CONTINUED)

6.3) ACCURACY DISCUSSION (continued)

X THE FOLLOWING DEVICES ARE CALIBRATED INDIVIDUALLY. THEIR ACCEPTANCE BANDS ARE AS FOLLOWS:

DEVICE	Ab	REF.
0-RM-90-102/103 (ratemeter)	±0.3V	3,10,11
0-RM/RI-90-102/103 (bistable/indicator)	±0.3 V	15

X THE FOLLOWING DEVICES ARE CALIBRATED TOGETHER. THE ACCEPTANCE BAND FOR THE COMBINATION OF THESE DEVICES IS AS FOLLOWS:

DEVICE	Ab	REFERENCE
0-RE-90-102/103	±0.3 V	Section 4.5
0-RM-90-102/103		10,15

6) COMPUTATIONS/ANALYSES (CONTINUED)

6.4) ACCURACY CALCULATION INDEX

6.4.1 Ratemeter Error	
6.4.1.1 Reference Accuracy	Re
6.4.1.2 Output Calibration Test Error	OCTe
6.4.1.3 Acceptance Band	Ab
6.4.1.4 Input Calibration Test Error	ICTe
6.4.1.5 Input Calibration Reading Error	ICRe
6.4.1.6 Normal Measurable Accuracy	Anf_{RM}
6.4.2 Ratemeter - Detector Error	
6.4.2.1 Net count Rate Accuracy	Encr
6.4.2.2 Primary Calibration Error	Epc
6.4.2.3 Energy Dependence Error	Eed
6.4.2.4 Factory Alignment Error	Efac
6.4.2.5 Imprecision Error	Eimp
6.4.2.6 Normal Measurable Accuracy	$Anf_{RM/RD}$
6.4.2.7 Normal Accuracy	$An_{RM/RD}$
6.4.2.8 Ratemeter/Detector Acceptance Band	$Ab_{RM/RD}$
6.4.3 Bistable Loop Error	
6.4.3.1 Bistable Error	Ebs
6.4.3.2 Input Calibration Testing Error	ICTe
6.4.3.3 Acceptance Band	Ab
6.4.3.4 Bistable Drift	Ebd
6.4.3.5 Normal Measurable Accuracy	Anf_{BS}
6.4.3.6 Normal Measurable Loop Accuracy	$LAnf_{BS}$
6.4.3.7 Normal Loop Accuracy	LAn_{BS}
6.4.3.8 Loop Accident Accuracy	LAa_{BS}
6.4.3.9 Allowable Value	AV
6.4.3.10 Setpoint Determination	
6.4.4 Indicator Loop Error	
6.4.4.1 Output Calibration Testing Error	OCTe
6.4.4.2 Acceptance Band	Ab
6.4.4.3 Indicator Movement Error	INDMe
6.4.4.4 Normal Measurable Accuracy	Anf_I
6.4.4.5 Normal Measurable Loop Accuracy	$LAnf_I$
6.4.4.6 Indicator Reading Error	INDRe
6.4.4.7 Normal Loop Accuracy	LAn_I
6.4.4.8 Loop Accident Accuracy	LAa_I

6) COMPUTATIONS / ANALYSES (CONTINUED)
6.4) ACCURACY CALCULATION (CONTINUED)

6.4.1 Ratemeter Module Error

6.4.1.1 Reference Accuracy (Re)

$Re_\% := 3.0$ % of span

$Re := \frac{Re_\%}{100} \cdot 10$ volts

$Re = 0.3$ volts

6.4.1.2 Output Calibration Testing Error (OCTe)

$OCTe_\% := 0.1$ % eq. full scale

$OCTe := \frac{OCTe_\%}{100} \cdot 10$ volts

$OCTe = 0.01$ volts

6.4.1.3 Acceptance Band (Ab)

$Ab_\% := 3$ % of Eq. full scale

$Ab := \frac{Ab_\%}{100} \cdot 10$ volts

$Ab = 0.3$ volts

6) COMPUTATIONS / ANALYSES (CONTINUED)
6.4) ACCURACY CALCULATION (CONTINUED)

6.4.1 Ratemeter Module Error (CONTINUED)

6.4.1.4 Input Calibration Test Error (ICTe)

ICTe :=4.0 % reading

Per reference 13 the transfer function to equate a reading error into an equivalent linear full scale error is:

% Reading error = $-(1-10^{+/-B(A)}) \times 100$

where B = No. of decades / span
and A = full scale error in volts

Therefore, by arranging terms the reading error can be expressed in volts by the following equation:

ICTe_pos = LOG (1 + (%Reading/100)) / (No. Decades / Span)

$$ICTe_pos := \frac{\log\left(1+\frac{ICTe}{100}\right)}{\left(\frac{5}{10}\right)}$$

ICTe_pos = 0.034 volts

ICTe_neg = LOG (1 - (%Reading/100)) / (No. Decades / Span)

$$ICTe_neg := \frac{\log\left(1-\frac{ICTe}{100}\right)}{\left(\frac{5}{10}\right)}$$

ICTe_neg = −0.035 volts

6) COMPUTATIONS / ANALYSES (CONTINUED)
6.4) ACCURACY CALCULATION (CONTINUED)

6.4.1 Ratemeter Module Error (CONTINUED)

6.4.1.5 Input Calibration Reading Error (ICRe)

ICRe = 4.0% of reading

The error is the same as ICTe which was calculated in section 6.4.1.4.

$ICRe_pos := ICTe_pos$

$ICRe_pos = 0.034$ volts

$ICRe_neg := ICTe_neg$ volts

$ICRe_neg = -0.035$

6.4.1.6 Normal Measurable Accuracy (Anf_RM)

$$Anf_RM_pos := \sqrt{Re^2 + OCTe^2 + Ab^2 + ICTe_pos^2 + ICRe_pos^2}$$

$Anf_RM_pos = 0.427$ volts

$$Anf_RM_neg := \sqrt{Re^2 + OCTe^2 + Ab^2 + ICTe_neg^2 + ICRe_neg^2}$$

$Anf_RM_neg = 0.427$ volts

Anf_RM can also be expressed in terms of % reading error based on the transfer function given in reference 13 (See Section 6.4.1.4).

$$Anf_RM_pos_\% := -\left(1 - 10^{Anf_RM_pos \cdot 0.5}\right) \cdot 100$$

$Anf_RM_pos_\% = 63.514$ % reading

$$Anf_RM_neg_\% := -\left(1 - 10^{-Anf_RM_neg \cdot 0.5}\right) \cdot 100$$

$Anf_RM_neg_\% = -38.859$ % reading

Whereas,

Anf_RM = An_RM = Aa_RM (no unmeasurables)

6) COMPUTATIONS / ANALYSIS (CONTINUED)
6.4) ACCURACY CALCULATION (CONTINUED)

6.4.2 Ratemeter - Detector Error

6.4.2.1 Net Count Rate Accuracy (Encr)

$Encr := 14$ % of reading

From the transfer function given in reference 13 (See section 6.4.1.4).

Encr_pos = LOG (1+ (%Reading/100)) / (No. Decades / Span)

$$Encr_pos := \frac{\log\left(1 + \frac{Encr}{100}\right)}{\left(\frac{5}{10}\right)}$$

$Encr_pos = 0.114$ volts

Encr_neg = LOG (1 - (%Reading/100)) / (No. Decades / Span)

$$Encr_neg := \frac{\log\left(1 - \frac{Encr}{100}\right)}{\left(\frac{5}{10}\right)}$$

$Encr_neg = -0.131$ volts

6) COMPUTATIONS / ANALYSES (CONTINUED)
6.4) ACCURACY CALCULATION (CONTINUED)

6.4.2 Ratemeter - Detector Error (CONTINUED)

6.4.2.2 Primary Calibration Error (Epc)

$Epc := 5$ % of reading

From the transfer function given in reference 13 (See section 6.4.1.4).

Epc_pos = LOG (1+ (%Reading/100)) / (No. Decades / Span)

$$Epc_pos := \frac{\log\left(1 + \frac{Epc}{100}\right)}{\left(\frac{5}{10}\right)}$$

$Epc_pos = 0.042$ volts

Epc_neg = LOG (1 - (%Reading/100)) / (No. Decades / Span)

$$Epc_neg := \frac{\log\left(1 - \frac{Epc}{100}\right)}{\left(\frac{5}{10}\right)}$$

$Epc_neg = -0.045$ volts

6) COMPUTATIONS / ANALYSES (CONTINUED)
6.4) ACCURACY CALCULATION (CONTINUED)

6.4.2 Ratemeter - Detector Error (Continued)

Energy Dependence Error (Eed)

Eed := 15 % of reading

From the transfer function given in reference 13 (See section 6.4.1.4).

Eed_pos = LOG (1+ (%Reading/100)) / (No. Decades / Span)

$$Eed_pos := \frac{\log\left(1+\frac{Eed}{100}\right)}{\left(\frac{5}{10}\right)}$$

$Eed_pos = 0.121$ volts

Eed_neg = LOG (1 - (%Reading/100)) / (No. Decades / Span)

$$Eed_neg := \frac{\log\left(1-\frac{Eed}{100}\right)}{\left(\frac{5}{10}\right)}$$

$Eed_neg = -0.141$ volts

6) COMPUTATIONS / ANALYSES (CONTINUED)
6.4) ACCURACY CALCULATION (CONTINUED)

6.4.2 Ratemeter - Detector Error (CONTINUED).

6.4.2.4 Factory Alignment Error (Efac)

Efac := 5 % of reading

From the transfer function given in reference 13 (See section 6.4.1.4)

Efac_pos = LOG (1+ (%Reading/100)) / (No. Decades / Span)

$$Efac_pos := \frac{\log\left(1+\frac{5}{100}\right)}{\left(\frac{5}{10}\right)}$$

$Efac_pos = 0.042$ volts

Efac_neg = LOG (1- (%Reading/100)) / (No. Decades / Span)

$$Efac_neg := \frac{\log\left(1-\frac{5}{100}\right)}{\left(\frac{5}{10}\right)}$$

$Efac_neg = -0.045$ volts

6) COMPUTATIONS / ANALYSIS (CONTINUED)
6.4) ACCURACY CALCULATION (CONTINUED)
6.4.2 Ratemeter - Dector Error (CONTINUED)
6.4.2.5 Imprecision Error (Eimp)

$Eimp_\% := 40.59$ % of reading

$$Eimp_pos := \left[\frac{\log\left(1 + \frac{Eimp_\%}{100}\right)}{\left(\frac{5}{10}\right)}\right]$$

$Eimp_pos = 0.296$ volts

$$Eimp_neg := \left[\frac{\log\left(1 - \frac{Eimp_\%}{100}\right)}{\left(\frac{5}{10}\right)}\right]$$

$Eimp_neg = -0.452$ volts

6.4.2.6 Normal Measurable Accuracy ($Anf_{RM/RD}$)

$$Anf_RM_RD_pos := \sqrt{Anf_RM_pos^2 + Encr_pos^2 + Eimp_pos^2}$$

$Anf_RM_RD_pos = 0.532$ volts

$$Anf_RM_RD_neg := \sqrt{Anf_RM_neg^2 + Encr_neg^2 + Eimp_neg^2}$$

$Anf_RM_RD_neg = 0.636$ volts

Note: The above Anf_RM_RD_pos and Anf_RM_RD_neg terms represent the acceptable as found calibration tolerances with the input at the detector while monitoring the output at TP3 of the ratemeter.

6) COMPUTATIONS / ANALYSES (CONTINUED)

6.4) ACCURACY CALCULATION (CONTINUED)

6.4.2 Ratemeter - Detector Error (CONTINUED)

6.4.2.7 Normal Accuracy (An_RM_RD)

$$An_RM_RD_pos := \sqrt{Anf_RM_RD_pos^2 + Epc_pos^2 + Eed_pos^2 + Efac_pos^2}$$

$$An_RM_RD_pos = 0.549 \quad \text{volts}$$

$$An_RM_RD_neg := \sqrt{Anf_RM_RD_neg^2 + Epc_neg^2 + Eed_neg^2 + Efac_neg^2}$$

$$An_RM_RD_neg = 0.654 \quad \text{volts}$$

An_RM_RD can also be expressed in terms of % reading error based on the transfer function given in reference 13 (See Section 6.4.1.4).

$$An_RM_RD_pos_\% := -\left(1 - 10^{An_RM_RD_pos \cdot 0.5}\right) \cdot 100$$

$$An_RM_RD_pos_\% = 88.121 \quad \% \quad \text{reading}$$

$$An_RM_RD_neg_\% := -\left(1 - 10^{-An_RM_RD_neg \cdot 0.5}\right) \cdot 100$$

$$An_RM_RD_neg_\% = -52.924 \quad \% \quad \text{reading}$$

6) COMPUTATIONS / ANALYSES (CONTINUED)

6.4) ACCURACY CALCULATION (CONTINUED)

6.4.2 Ratemeter - Detector Error (CONTINUED)

6.4.2.8 Acceptance Band (Ab_RM_RD)

$Ab_RM_RD := 0.3$ volts

6.4.3 Bistable Loop Error

6.4.3.1 Bistable Error (Ebs)

Ebs = 1.0% of reading

From the transfer function given in reference 13 (See section 6.4.1.4)

Ebs (volts) = LOG (1+ (%Reading/100)) / (No. Decades / Span)

$$Ebs := \frac{\log\left(1+\frac{1}{100}\right)}{\left(\frac{5}{10}\right)}$$

$Ebs = 8.643 \cdot 10^{-3}$ volts

6.4.3.2 Input Calibration Testing Error (ICTe)

$ICTe_\% := 0.1$ % of FS

or converting to volts;

$$ICTe := \frac{ICTe_\%}{100} \cdot 10$$

$ICTe = 0.01$ volts

6.4.3.3 Acceptance Band (Ab)

$Ab_\% := 3$ % of FS

or converting to volts;

$$Ab := \frac{3}{100} \cdot 10$$

$Ab = 0.3$ volts

6) COMPUTATIONS / ANALYSES (CONTINUED)

6.4) ACCURACY CALCULATION (CONTINUED)

6.4.3 Bistable Loop Error

6.4.3.4 Bistable Drift (Ebd)

Sorrento Electronics the vendor of this equipment considers the only error associated with the bistable to be Ebs (See Section 6.4.3.1). All other errors are considered to be part of the reference accuracy of the ratemeter. However, Sequoyah in reference 19, using field data has been able to isolate the error associated with bistable drift as +11.08% and -10.89% of reading. To be conservative this value will be combined with the other bistable errors to yield a as-found value for calibration. From the transfer function given in reference 13 (See section 6.4.1.4).

Ebd (+volts) = LOG (1+ (%Reading/100)) / (No. Decades / Span)

$$Ebd_pos := \frac{\log\left(1+\frac{11.08}{100}\right)}{\left(\frac{5}{10}\right)}$$

$Ebd_pos = 0.091$ volts

Ebd (-volts) = LOG (1- (%Reading/100)) / (No. Decades / Span)

$$Ebd_neg := \left[\frac{\log\left(1-\frac{10.89}{100}\right)}{\left(\frac{5}{10}\right)}\right]$$

$Ebd_neg = -0.1$ volts

6) COMPUTATIONS / ANALYSES (CONTINUED)

6.4) ACCURACY CALCULATION (CONTINUED)

6.4.3 Bistable Loop Error (CONTINUED)

6.4.3.5 Normal Measurable Accuracy (Anf_BS)

The bistable is calibrated by varying a potentiometer on the ratemeter. The detector and ratementer electronics are part of this calibration, therefore these errors are not included in the calculation of Anf.

$$Anf_BS_pos := \sqrt{Ebs^2 + ICTe^2 + Ab^2 + Ebd_pos^2}$$

$Anf_BS_pos = 0.314$ volts

$$Anf_BS_neg := \sqrt{Ebs^2 + ICTe^2 + Ab^2 + Ebd_neg^2}$$

$Anf_BS_neg = 0.317$ volts

6.4.3.6 Normal Measurable Loop Accuracy (LAnf_BS)

$$LAnf_BS_pos := \sqrt{Anf_RM_pos^2 + Anf_BS_pos^2 + Encr_pos^2 + Eimp_pos^2}$$

$LAnf_BS_pos = 0.618$ volts

$$LAnf_BS_neg := \sqrt{Anf_RM_neg^2 + Anf_BS_neg^2 + Encr_neg^2 + Eimp_neg^2}$$

$LAnf_BS_neg = 0.71$ volts

6.4.3.7 Normal Loop Accuracy (LAn_BS)

$$LAn_BS_pos := \sqrt{LAnf_BS_pos^2 + Eed_pos^2 + Epc_pos^2 + Efac_pos^2}$$

$LAn_BS_pos = 0.632$ volts

$$LAn_BS_neg := \sqrt{LAnf_BS_neg^2 + Eed_neg^2 + Epc_neg^2 + Efac_neg^2}$$

$LAn_BS_neg = 0.727$ volts

6) COMPUTATIONS / ANALYSES (CONTINUED)

6.4) ACCURACY CALCULATION (CONTINUED)

6.4.3 Bistable Loop Error (CONTINUED)

6.4.3.7 Normal Loop Accuracy (LAn_BS) (CONTINUED)

LAn_BS can also be expressed in terms of % reading error based on the transfer function given in reference 13 (See Section 6.4.1.4).

$$LAn_BS_pos_\% := -\left(1 - 10^{LAn_BS_pos \cdot 0.5}\right) \cdot 100$$

$$LAn_BS_pos_\% = 107.079 \text{ \% reading}$$

$$LAn_BS_neg_\% := -\left(1 - 10^{-LAn_BS_neg \cdot 0.5}\right) \cdot 100$$

$$LAn_BS_neg_\% = -56.696 \text{ \% reading}$$

6.4.3.8 Loop Accident Accuracy (LAa_BS)

$$LAa_BS_pos_\% := LAn_BS_pos_\%$$

$$LAa_BS_pos_\% = 107.079 \text{ \% reading}$$

$$LAa_BS_neg_\% := LAn_BS_neg_\%$$

$$LAa_BS_neg_\% = -56.696 \text{ \% reading}$$

6.4.3.9 Allowable Value (AV)

The Safety Limit (SL) for the control function (initiate isolation of the auxiliary building ventilation exhaust and startup of the auxiliary building gas treatment system) is 375.49 mR/hr. This limit is converted to voltage as follows:

$$SL_mR := 375.49$$

$$SL_volts := 2 \cdot (\log(SL_mR) + 1)$$

$$SL_volts = 7.149 \text{ volts}$$

6) COMPUTATIONS / ANALYSES (CONTINUED)

6.4) ACCURACY CALCULATION (CONTINUED)

6.4.3 Bistable Loop Error (CONTINUED)

6.4.3.9 Allowable Value (AV) (CONTINUED)

Where:

$Adbe := LAn_BS_pos$ and $Margin := 0.25 \cdot LAn_BS_pos$

Note: The margin of 25% of LAn_BS_pos is added for conservatism.

$AV_volts := SL_volts - ((Adbe - LAnf_BS_pos) + Margin)$

$AV_volts = 6.976$ volts

Converting to mR/hr:

$$AV_mR := 10^{\left(\frac{AV_volts \cdot 5}{10}\right) - 1}$$

$AV_mR = 307.774$ mR/hr

Rounding down for conservatism of Tech Spec defined Allowable Value

$Tech_Spec_AV := floor(AV_mR)$

$Tech_Spec_AV = 307$ mR/hr

AV without the addition of the Margin would be:

$AV_volts_no_margin := SL_volts - ((Adbe - LAnf_BS_pos))$

$AV_volts_no_margin = 7.135$ volts

and

$$AV_mR_no_margin := 10^{\left(\frac{AV_volts_no_margin \cdot 5}{10}\right) - 1}$$

$AV_mR_no_margin = 369.204$ mR/hr

This results in an AV margin of:

$AV_mR_no_margin - AV_mR = 61.43$ mR/hr

or

$AV_volts_no_margin - AV_volts = 0.158$ volts

6) COMPUTATIONS / ANALYSES (CONTINUED)

6.4) ACCURACY CALCULATION (CONTINUED)

6.4.3 Bistable Loop Error (CONTINUED)

6.4.3.10 Setpoint Determination

A maximum setpoint (SP_max) value will be determined based on the value defined for AV in the previous section:

$$SP_max_volts := AV_volts - LAnf_BS_pos$$

$$SP_max_volts = 6.359 \quad \text{volts}$$

This value expressed in mR/hr is:

$$SP_max_mR := 10^{\left(\frac{SP_max_volts \cdot 5}{10}\right) - 1}$$

$$SP_max_mR = 151.16$$

Where;

$$SP_max_volts + LAn_BS_pos = 6.991 \quad \text{volts}$$

or converting to mR/hr

$$10^{\left[\frac{(SP_max_volts + LAn_BS_pos) \cdot 5}{10}\right] - 1} = 313.014 \quad \text{mR/hr}$$

and

$$SP_max_volts - LAn_BS_neg = 5.632 \quad \text{volts}$$

or converting to mR/hr

$$10^{\left[\frac{(SP_max_volts - LAn_BS_neg) \cdot 5}{10}\right] - 1} = 65.458 \quad \text{mR/hr}$$

6) COMPUTATIONS / ANALYSES (CONTINUED)

6.4) ACCURACY CALCULATION (CONTINUED)

6.4.4 Indicator Loop Error

6.4.4.1 Output Calibration Testing Error (OCTe)

$OCTe_\% := 0.1$ % of FS

$$OCTe := \frac{OCTe_\%}{100} \cdot 10$$

$OCTe = 0.01$ volts

6.4.4.2 Acceptance Band (Ab)

$Ab_\% := 3$ % of FS

$$Ab := \frac{Ab_\%}{100} \cdot 10$$

$Ab = 0.3$ volts

6.4.4.3 Indicator Movement Error (INDMe)

$INDMe_\% := 2.0$ % of eq. FS

$$INDMe := \frac{INDMe_\%}{100} \cdot 10$$

$INDMe = 0.2$ volts

6.4.4.4 Normal Measurable Accuracy (Anf_ind)

The indicator is calibrated by varing a potentiometer on the ratemete. The detector and ratementer electronics are not part of this calibration, therefore these errors are not included in the calculation of Anf_ind.

$$Anf_ind := \sqrt{INDMe^2 + OCTe^2 + Ab^2}$$

$Anf_ind = 0.361$ volts

6) COMPUTATIONS / ANALYSES (CONTINUED)

6.4) ACCURACY CALCULATION (CONTINUED)

6.4.4 Indicator Loop Error (CONTINUED)

6.4.4.5 Normal Measurable Loop Accuracy (LAnf_ind)

$$LAnf_ind_pos := \sqrt{Anf_RM_RD_pos^2 + Anf_ind^2}$$

$LAnf_ind_pos = 0.643$ volts

$$LAnf_ind_neg := \sqrt{Anf_RM_RD_neg^2 + Anf_ind^2}$$

$LAnf_ind_neg = 0.731$ volts

6.4.4.6 Indicator Reading Error (INDRe)

$INDRe_pos_\% := 1.94$ % of span

$$INDRe_pos := \frac{INDRe_pos_\%}{100} \cdot 10$$

$INDRe_pos = 0.194$ volts

$INDRe_neg_\% := 1.58$ % of span

$$INDRe_neg := \frac{INDRe_neg_\%}{100} \cdot 10$$

$INDRe_neg = 0.158$ volts

6.4.4.7 Normal Loop Accuracy (LAn_ind)

$$LAn_ind_pos := \sqrt{LAnf_ind_pos^2 + Eed_pos^2 + Epc_pos^2 + Efac_pos^2 + INDRe_pos^2}$$

$LAn_ind_pos = 0.685$ volts

$$LAn_ind_neg := \sqrt{LAnf_ind_neg^2 + Eed_neg^2 + Epc_neg^2 + Efac_neg^2 + INDRe_neg^2}$$

$LAn_ind_neg = 0.764$ volts

6) COMPUTATIONS / ANALYSES (CONTINUED)

6.4) ACCURACY CALCULATION (CONTINUED)

6.4.4 Indicator Loop Error (CONTINUED)

6.4.4.7 Normal Loop Accuracy (LAn_ind) (continued)

LAn_ind can also be expressed in terms of % reading error based on the transfer function given in reference 13 (See Section 6.6.1.4).

$$LAn_ind_pos_\% := -\left[1 - 10^{(LAn_ind_pos)\cdot 0.5}\right]\cdot 100$$

$LAn_ind_pos_\% = 119.998$ % reading

$$LAn_ind_neg_\% := -\left[1 - 10^{(-LAn_ind_neg)\cdot 0.5}\right]\cdot 100$$

$LAn_ind_neg_\% = -58.492$ % reading

6.4.4.8 Loop Accident Accuracy (LAa_ind)

$LAa_ind_pos_\% := LAn_ind_pos_\%$

$LAa_ind_pos_\% = 119.998$ % reading

$LAa_ind_neg_\% := LAn_ind_neg_\%$

$LAa_ind_neg_\% = -58.492$ % reading

SEQUOYAH NUCLEAR PLANT
BRANCH/PROJECT IDENTIFIER 0-RE-90-102/103

6) COMPUTATIONS/ANALYSES (CONTINUED)
6.4) ACCURACY CALCULATION (CONTINUED)

7.1) LOOP DIAGRAM

X APPLICABLE TO ALL LOOPS LISTED ON SHEETS 13

NA APPLICABLE ONLY TO LOOPS: NA

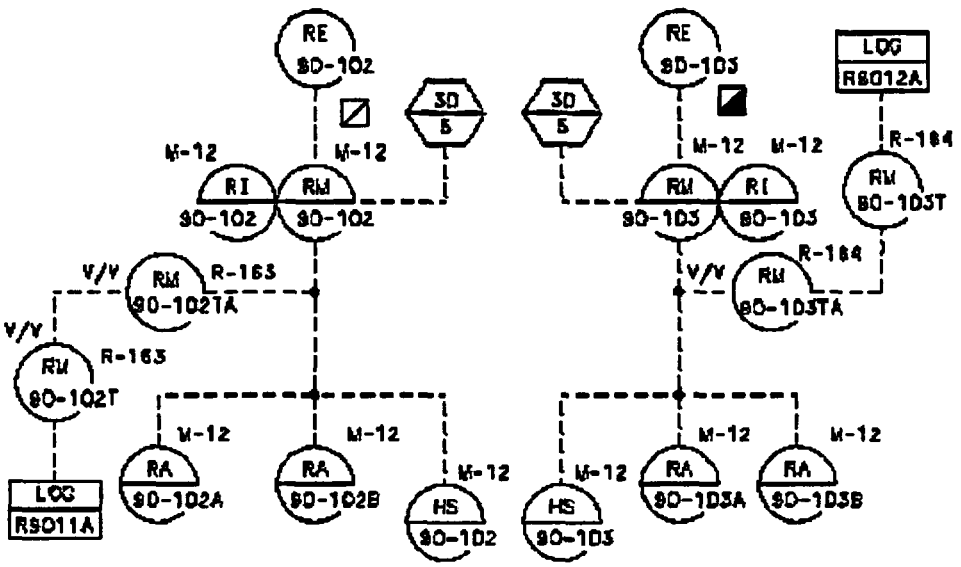

FUEL POOL RADIATION MONITOR
0-RE-90-102 & -103

Rev	0	Prep	LMB	Date	5-11-00	Check	EHT	Date	5/12/00	Sheet	49	c/o	50
Rev		Prep		Date		Check		Date		Sheet		c/o	
Rev		Prep		Date		Check		Date		Sheet		c/o	

DEMONSTRATED ACCURACY CALCULATION FOR
CONTROL ROOM AREA RADIATION MONITORS 0-RE-90-102/103

SEQUOYAH NUCLEAR PLANT
BRANCH/PROJECT IDENTIFIER 0-RE-90-102/103

8) SUMMARY OF RESULTS (BISTABLE)

X APPLICABLE TO ALL LOOPS LISTED ON SHEETS 13

NA APPLICABLE ONLY TO LOOPS: _____

SAFETY LIMIT	7.149 (375.49 mR/hr)	MARGIN 0.158 (62.476 mR/hr)
PV = ACCIDENT	6.991 (313.014 mR/hr)	
PV = SEISMIC	NA	
PV = NORMAL	6.991 (313.014 mR/hr)	
$SETPOINT_{MAX}$*	6.359 (151.16 mR/hr)	R1
PV = NORMAL	5.632 (65.458 mR/hr)	
PV = SEISMIC	NA	
PV = ACCIDENT	5.632 (65.458 mR/hr)	

AV_{UPPER} = 6.976 (307 mR/hr) + Aas = NA

AV_{LOWER} = NA - Aas = NA

ALL VALUES SHOWN ARE IN Volts UNLESS NOTED OTHERWISE

(REFER TO ACCURACY DISCUSSION, SECTION 6.4.3 FOR CLARIFICATION OF ABOVE)

* THE ERROR IN VOLTS IS CONSTANT OVER THE ENTIRE SPAN. THEREFORE THE ERROR AT THE BISTABLE SETPOINT WILL BE A CONSTANT %SETPOINT, REGARDLESS OF WHETHER THE SETPOINT REMAINS CONSTANT.

Rev	1	Prep	LMB	Date	7/19/02	Check	EJT	Date	9/11/02	Sheet	50	c/o	51
Rev		Prep		Date		Check		Date		Sheet		c/o	
Rev		Prep		Date		Check		Date		Sheet		c/o	

DEMONSTRATED ACCURACY CALCULATION FOR
CONTROL ROOM AREA RADIATION MONITORS 0-RE-90-102/103

SEQUOYAH NUCLEAR PLANT
BRANCH/PROJECT IDENTIFIER 0-RE-90-102/103

8) SUMMARY OF RESULTS (INDICATED)

X APPLICABLE TO ALL LOOPS LISTED ON SHEETS 13

NA APPLICABLE ONLY TO LOOPS: _____

REQUIRED ACCURACY NA

MARGIN NA

PV = ACCIDENT 119.998

PV = SEISMIC NA

PV = NORMAL 119.998

INDICATED VALUE

PV = NORMAL -58.492

PV = SEISMIC NA

PV = ACCIDENT -58.492

MARGIN NA

REQUIRED ACCURACY NA

AV_{UPPER} = NA + Aas = NA

AV_{LOWER} = NA - Aas = NA

ALL VALUES SHOWN ARE IN % READING

(REFER TO ACCURACY DISCUSSION, SECTION 6.4.4 FOR CLARIFICATION OF ABOVE)

R1

Rev	1	Prep	LMB	Date	7-19-02	Check	EHT	Date	9/11/02	Sheet	51	c/o	52
Rev		Prep		Date		Check		Date		Sheet		c/o	
Rev		Prep		Date		Check		Date		Sheet		c/o	

SEQUOYAH NUCLEAR PLANT
BRANCH/PROJECT IDENTIFIER 0-RE-90-102/103

APPENDIX A - EVALUATION FOR SAFETY LIMIT BASED ON ICRP-2 METHODOLOGY

9) CONCLUSIONS

X APPLICABLE TO ALL LOOPS LISTED ON SHEETS 13

NA APPLICABLE ONLY TO LOOPS: NA

The demonstrated accuracy of +0.656 volts (+LAn) and -0.812 volts (-LAn) for bistable loops 0-R-90-102 and 103 will not result in challenging the upper safety limit of 271.62 mR/hr based on maintaining a bistable setpoint of ≤ 105.61 mR/hr. However, the current setpoint for this loop must be maintained ≤ 105.61 mR/hr for compliance with the Safety Limit.

This maximum setpoint value allowed is less than the maximum allowed ≤200 mR/hr setpoint currently required by the Tech Specs. However, Plant Procedure 0-SI-ICC-090-102.A currently specifies the setpoint of 50 mR/hr. This condition is addressed within PER 02-003523-000. Therefore, the current Tech Spec and Safety Limit are both satisfied.

This Appendix to the calculation defines an Allowable Value of 221 mR/hr that will be in place until NRC approval of Tech Spec Change 02-01. Loop Indication for 0-R-90-102 and 103 does not have a required accuracy and is therefore determined to be acceptable.

SEQUOYAH NUCLEAR PLANT
BRANCH/PROJECT IDENTIFIER 0-RE-90-102/103

APPENDIX A - EVALUATION FOR SAFETY LIMIT BASED ON ICRP-2 METHODOLOGY

1) PURPOSE

The purpose of this appendix is to determine the accuracy of the instrumentation, setpoint requirements, and allowable value necessary for compliance with the safety limit of 271.62 mR/hr. This limit will be in place until NRC approval of Tech Spec Change 02-01.

Excerpts from the body of the accuracy calculation (mathCAD) have been incorporated within this appendix to formulate the provided results and summary.

6) COMPUTATIONS / ANALYSES (CONTINUED)
6.4) ACCURACY CALCULATION (CONTINUED)

6.4.1 Ratemeter Module Error

6.4.1.1 Reference Accuracy (Re)

$Re_\% := 3.0$ % of span

$Re := \frac{Re_\%}{100} \cdot 10$ volts

$Re = 0.3$ volts

6.4.1.2 Output Calibration Testing Error (OCTe)

$OCTe_\% := 0.1$ % eq. full scale

$OCTe := \frac{OCTe_\%}{100} \cdot 10$ volts

$OCTe = 0.01$ volts

6.4.1.3 Acceptance Band (Ab)

$Ab_\% := 3$ % of Eq. full scale

$Ab := \frac{Ab_\%}{100} \cdot 10$ volts

$Ab = 0.3$ volts

APPENDIX A - EVALUATION FOR SAFETY LIMIT BASED ON ICRP-2 METHODOLOGY

6) COMPUTATIONS / ANALYSES (CONTINUED)
6.4) ACCURACY CALCULATION (CONTINUED)

6.4.1 Ratemeter Module Error (CONTINUED)

6.4.1.4 Input Calibration Test Error (ICTe)

ICTe := 4.0 % reading

Per reference 13 the transfer function to equate a reading error into an equivalent linear full scale error is:

% Reading error = $-(1-10^{+/-B(A)}) \times 100$

where B = No. of decades / span
and A = full scale error in volts

Therefore, by arranging terms the reading error can be expressed in volts by the following equation:

ICTe_pos = LOG (1 + (%Reading/100)) / (No. Decades / Span)

$$ICTe_pos := \frac{\log\left(1+\frac{ICTe}{100}\right)}{\left(\frac{5}{10}\right)}$$

ICTe_pos = 0.034 volts

ICTe_neg = LOG (1 - (%Reading/100)) / (No. Decades / Span)

$$ICTe_neg := \frac{\log\left(1-\frac{ICTe}{100}\right)}{\left(\frac{5}{10}\right)}$$

ICTe_neg = −0.035 volts

APPENDIX A - EVALUATION FOR SAFETY LIMIT BASED ON ICRP-2 METHODOLOGY

6) COMPUTATIONS / ANALYSES (CONTINUED)
6.4) ACCURACY CALCULATION (CONTINUED)

6.4.1 Ratemeter Module Error (CONTINUED)

6.4.1.5 Input Calibration Reading Error (ICRe)

ICRe = 4.0% of reading
The error is the same as ICTe which was calculated in section 6.4.1.4.

$ICRe_pos := ICTe_pos$

$ICRe_pos = 0.034$ volts

$ICRe_neg := ICTe_neg$ volts

$ICRe_neg = -0.035$

6.4.1.6 Normal Measurable Accuracy (Anf_RM)

$$Anf_RM_pos := \sqrt{Re^2 + OCTe^2 + Ab^2 + ICTe_pos^2 + ICRe_pos^2}$$

$Anf_RM_pos = 0.427$ volts

$$Anf_RM_neg := \sqrt{Re^2 + OCTe^2 + Ab^2 + ICTe_neg^2 + ICRe_neg^2}$$

$Anf_RM_neg = 0.427$ volts

Anf_RM can also be expressed in terms of % reading error based on the transfer function given in reference 13 (See Section 6.4.1.4).

$$Anf_RM_pos_\% := -\left(1 - 10^{Anf_RM_pos \cdot 0.5}\right) \cdot 100$$

$Anf_RM_pos_\% = 63.514$ % reading

$$Anf_RM_neg_\% := -\left(1 - 10^{-Anf_RM_neg \cdot 0.5}\right) \cdot 100$$

$Anf_RM_neg_\% = -38.859$ % reading

Whereas,

Anf_RM = An_RM = Aa_RM (no unmeasurables)

APPENDIX A - EVALUATION FOR SAFETY LIMIT BASED ON ICRP-2 METHODOLOGY

6) COMPUTATIONS / ANALYSIS (CONTINUED)
6.4) ACCURACY CALCULATION (CONTINUED)

6.4.2 Ratemeter - Detector Error

6.4.2.1 Net Count Rate Accuracy (Encr)

$Encr := 14$ % of reading

From the transfer function given in reference 13 (See section 6.4.1.4).

Encr_pos = LOG (1+ (%Reading/100)) / (No. Decades / Span)

$$Encr_pos := \frac{\log\left(1 + \frac{Encr}{100}\right)}{\left(\frac{5}{10}\right)}$$

$Encr_pos = 0.114$ volts

Encr_neg = LOG (1 - (%Reading/100)) / (No. Decades / Span)

$$Encr_neg := \frac{\log\left(1 - \frac{Encr}{100}\right)}{\left(\frac{5}{10}\right)}$$

$Encr_neg = -0.131$ volts

APPENDIX A - EVALUATION FOR SAFETY LIMIT BASED ON ICRP-2 METHODOLOGY

6) COMPUTATIONS / ANALYSES (CONTINUED)
6.4) ACCURACY CALCULATION (CONTINUED)

6.4.2 Ratemeter - Detector Error (CONTINUED)

6.4.2.2 Primary Calibration Error (Epc)

$Epc := 5$ % of reading

From the transfer function given in reference 13 (See section 6.4.1.4).

Epc_pos = LOG (1+ (%Reading/100)) / (No. Decades / Span)

$$Epc_pos := \frac{\log\left(1 + \frac{Epc}{100}\right)}{\left(\frac{5}{10}\right)}$$

$Epc_pos = 0.042$ volts

Epc_neg = LOG (1 - (%Reading/100)) / (No. Decades / Span)

$$Epc_neg := \frac{\log\left(1 - \frac{Epc}{100}\right)}{\left(\frac{5}{10}\right)}$$

$Epc_neg = -0.045$ volts

APPENDIX A - EVALUATION FOR SAFETY LIMIT BASED ON ICRP-2 METHODOLOGY

6) COMPUTATIONS / ANALYSES (CONTINUED)
6.4) ACCURACY CALCULATION (CONTINUED)

6.4.2 Ratemeter - Detector Error (Continued)

Energy Dependence Error (Eed)

Eed := 15 % of reading

From the transfer function given in reference 13 (See section 6.4.1.4).

Eed_pos = LOG (1+ (%Reading/100)) / (No. Decades / Span)

$$Eed_pos := \frac{\log\left(1+\frac{Eed}{100}\right)}{\left(\frac{5}{10}\right)}$$

Eed_pos = 0.121 volts

Eed_neg = LOG (1 - (%Reading/100)) / (No. Decades / Span)

$$Eed_neg := \frac{\log\left(1-\frac{Eed}{100}\right)}{\left(\frac{5}{10}\right)}$$

Eed_neg = −0.141 volts

APPENDIX A - EVALUATION FOR SAFETY LIMIT BASED ON ICRP-2 METHODOLOGY

6) COMPUTATIONS / ANALYSES (CONTINUED)
6.4) ACCURACY CALCULATION (CONTINUED)

6.4.2 Ratemeter - Detector Error (CONTINUED).

6.4.2.4 Factory Alignment Error (Efac)

Efac := 5 % of reading

From the transfer function given in reference 13 (See section 6.4.1.4)

Efac_pos = LOG (1+ (%Reading/100)) / (No. Decades / Span)

$$Efac_pos := \frac{\log\left(1+\frac{5}{100}\right)}{\left(\frac{5}{10}\right)}$$

Efac_pos = 0.042 volts

Efac_neg = LOG (1- (%Reading/100)) / (No. Decades / Span)

$$Efac_neg := \frac{\log\left(1-\frac{5}{100}\right)}{\left(\frac{5}{10}\right)}$$

Efac_neg = −0.045 volts

APPENDIX A - EVALUATION FOR SAFETY LIMIT BASED ON ICRP-2 METHODOLOGY

6) COMPUTATIONS / ANALYSIS (CONTINUED)
6.4) ACCURACY CALCULATION (CONTINUED)
6.4.2 Ratemeter - Dector Error (CONTINUED)
6.4.2.5 Imprecision Error (Eimp)

Eimp_% := 48.67 % of reading (for setpoint of 105 mR/hr)

$$Eimp_pos := \left[\frac{\log\left(1+\frac{Eimp_\%}{100}\right)}{\left(\frac{5}{10}\right)}\right]$$

Eimp_pos = 0.344 volts

$$Eimp_neg := \left[\frac{\log\left(1-\frac{Eimp_\%}{100}\right)}{\left(\frac{5}{10}\right)}\right]$$

Eimp_neg = −0.579 volts

6.4.2.6 Normal Measurable Accuracy ($Anf_{RM/RD}$)

$$Anf_RM_RD_pos := \sqrt{Anf_RM_pos^2 + Encr_pos^2 + Eimp_pos^2}$$

Anf_RM_RD_pos = 0.56 volts

$$Anf_RM_RD_neg := \sqrt{Anf_RM_neg^2 + Encr_neg^2 + Eimp_neg^2}$$

Anf_RM_RD_neg = 0.732 volts

Note: The above Anf_RM_RD_pos and Anf_RM_RD_neg terms represent the acceptable as found calibration tolerances with the input at the detector while monitoring the output at TP3 of the ratemeter.

6) COMPUTATIONS / ANALYSES (CONTINUED)

6.4) ACCURACY CALCULATION (CONTINUED)

6.4.2 Ratemeter - Detector Error (CONTINUED)

6.4.2.7 Normal Accuracy (An_RM_RD)

$$An_RM_RD_pos := \sqrt{Anf_RM_RD_pos^2 + Epc_pos^2 + Eed_pos^2 + Efac_pos^2}$$

$$An_RM_RD_pos = 0.576 \quad \text{volts}$$

$$An_RM_RD_neg := \sqrt{Anf_RM_RD_neg^2 + Epc_neg^2 + Eed_neg^2 + Efac_neg^2}$$

$$An_RM_RD_neg = 0.748 \quad \text{volts}$$

An_RM_RD can also be expressed in terms of % reading error based on the transfer function given in reference 13 (See Section 6.4.1.4).

$$An_RM_RD_pos_\% := -\left(1 - 10^{An_RM_RD_pos \cdot 0.5}\right) \cdot 100$$

$$An_RM_RD_pos_\% = 94.199 \quad \% \quad \text{reading}$$

$$An_RM_RD_neg_\% := -\left(1 - 10^{-An_RM_RD_neg \cdot 0.5}\right) \cdot 100$$

$$An_RM_RD_neg_\% = -57.724 \quad \% \quad \text{reading}$$

6) COMPUTATIONS / ANALYSES (CONTINUED)

6.4) ACCURACY CALCULATION (CONTINUED)

6.4.2 Ratemeter - Detector Error (CONTINUED)

6.4.2.8 Acceptance Band (Ab_RM_RD)

$Ab_RM_RD := 0.3$ volts

6.4.3 Bistable Loop Error

6.4.3.1 Bistable Error (Ebs)

Ebs = 1.0% of reading

From the transfer function given in reference 13 (See section 6.4.1.4)

Ebs (volts) = LOG (1+ (%Reading/100)) / (No. Decades / Span)

$$Ebs := \frac{\log\left(1+\frac{1}{100}\right)}{\left(\frac{5}{10}\right)}$$

$Ebs = 8.643 \cdot 10^{-3}$ volts

6.4.3.2 Input Calibration Testing Error (ICTe)

$ICTe_\% := 0.1$ % of FS

or converting to volts;

$$ICTe := \frac{ICTe_\%}{100} \cdot 10$$

$ICTe = 0.01$ volts

6.4.3.3 Acceptance Band (Ab)

$Ab_\% := 3$ % of FS

or converting to volts;

$$Ab := \frac{3}{100} \cdot 10$$

$Ab = 0.3$ volts

6) COMPUTATIONS / ANALYSES (CONTINUED)

6.4) ACCURACY CALCULATION (CONTINUED)

6.4.3 Bistable Loop Error

6.4.3.4 Bistable Drift (Ebd)

Sorrento Electronics the vendor of this equipment considers the only error associated with the bistable to be Ebs (See Section 6.4.3.1). All other errors are considered to be part of the reference accuracy of the ratemeter. However, Sequoyah in reference 19, using field data has been able to isolate the error associated with bistable drift as +11.08% and -10.89% of reading. To be conservative this value will be combined with the other bistable errors to yield a as-found value for calibration. From the transfer function given in reference 13 (See section 6.4.1.4).

Ebd (+volts) = LOG (1+ (%Reading/100)) / (No. Decades / Span)

$$Ebd_pos := \frac{\log\left(1+\frac{11.08}{100}\right)}{\left(\frac{5}{10}\right)}$$

$Ebd_pos = 0.091$ volts

Ebd (-volts) = LOG (1- (%Reading/100)) / (No. Decades / Span)

$$Ebd_neg := \left[\frac{\log\left(1-\frac{10.89}{100}\right)}{\left(\frac{5}{10}\right)}\right]$$

$Ebd_neg = -0.1$ volts

6) COMPUTATIONS / ANALYSES (CONTINUED)

6.4) ACCURACY CALCULATION (CONTINUED)

6.4.3 Bistable Loop Error (CONTINUED)

6.4.3.5 Normal Measurable Accuracy (Anf_BS)

The bistable is calibrated by varying a potentiometer on the ratemeter. The detector and ratementer electronics are part of this calibration, therefore these errors are not included in the calculation of Anf.

$$Anf_BS_pos := \sqrt{Ebs^2 + ICTe^2 + Ab^2 + Ebd_pos^2}$$

$Anf_BS_pos = 0.314$ volts

$$Anf_BS_neg := \sqrt{Ebs^2 + ICTe^2 + Ab^2 + Ebd_neg^2}$$

$Anf_BS_neg = 0.317$ volts

6.4.3.6 Normal Measurable Loop Accuracy (LAnf_BS)

$$LAnf_BS_pos := \sqrt{Anf_RM_pos^2 + Anf_BS_pos^2 + Encr_pos^2 + Eimp_pos^2}$$

$LAnf_BS_pos = 0.642$ volts

$$LAnf_BS_neg := \sqrt{Anf_RM_neg^2 + Anf_BS_neg^2 + Encr_neg^2 + Eimp_neg^2}$$

$LAnf_BS_neg = 0.797$ volts

6.4.3.7 Normal Loop Accuracy (LAn_BS)

$$LAn_BS_pos := \sqrt{LAnf_BS_pos^2 + Eed_pos^2 + Epc_pos^2 + Efac_pos^2}$$

$LAn_BS_pos = 0.656$ volts

$$LAn_BS_neg := \sqrt{LAnf_BS_neg^2 + Eed_neg^2 + Epc_neg^2 + Efac_neg^2}$$

$LAn_BS_neg = 0.812$ volts

6) COMPUTATIONS / ANALYSES (CONTINUED)

6.4) ACCURACY CALCULATION (CONTINUED)

6.4.3 Bistable Loop Error (CONTINUED)

6.4.3.7 Normal Loop Accuracy (LAn_BS) (CONTINUED)

LAn_BS can also be expressed in terms of % reading error based on the transfer function given in reference 13 (See Section 6.4.1.4).

$$LAn_BS_pos_\% := -\left(1 - 10^{LAn_BS_pos \cdot 0.5}\right) \cdot 100$$

$LAn_BS_pos_\% = 112.91$ % reading

$$LAn_BS_neg_\% := -\left(1 - 10^{-LAn_BS_neg \cdot 0.5}\right) \cdot 100$$

$LAn_BS_neg_\% = -60.738$ % reading

6.4.3.8 Loop Accident Accuracy (LAa_BS)

$LAa_BS_pos_\% := LAn_BS_pos_\%$

$LAa_BS_pos_\% = 112.91$ % reading

$LAa_BS_neg_\% := LAn_BS_neg_\%$

$LAa_BS_neg_\% = -60.738$ % reading

6.4.3.9 Allowable Value (AV)

The Safety Limit (SL) for the control function (initiate isolation of the auxiliary building ventilation exhaust and startup of the auxiliary building gas treatment system) is 271.62 mR/hr. This limit is converted to voltage as follows:

$SL_mR := 271.62$

$SL_volts := 2 \cdot (\log(SL_mR) + 1)$

$SL_volts = 6.868$ volts

6) COMPUTATIONS / ANALYSES (CONTINUED)

6.4) ACCURACY CALCULATION (CONTINUED)

6.4.3 Bistable Loop Error (CONTINUED)

6.4.3.9 Allowable Value (AV) (CONTINUED)

Where:

$Adbe := LAn_BS_pos$ and $Margin := 0.25 \cdot LAn_BS_pos$

Note: The margin of 25% of LAn_BS_pos is added for conservatism.

$AV_volts := SL_volts - ((Adbe - LAnf_BS_pos) + Margin)$

$AV_volts = 6.69$ volts

Converting to mR/hr:

$$AV_mR := 10^{\left(\frac{AV_volts \cdot 5}{10}\right) - 1}$$

$AV_mR = 221.236$ mR/hr

Rounding down for conservatism

$Conservative_AV := floor(AV_mR)$

$Conservative_AV = 221$ mR/hr

AV without the addition of the Margin would be:

$AV_volts_no_margin := SL_volts - ((Adbe - LAnf_BS_pos))$

$AV_volts_no_margin = 6.854$ volts

and

$$AV_mR_no_margin := 10^{\left(\frac{AV_volts_no_margin \cdot 5}{10}\right) - 1}$$

$AV_mR_no_margin = 267.242$ mR/hr

This results in an AV margin of:

$AV_mR_no_margin - AV_mR = 46.006$ mR/hr

or

$AV_volts_no_margin - AV_volts = 0.164$ volts

6) COMPUTATIONS / ANALYSES (CONTINUED)

6.4) ACCURACY CALCULATION (CONTINUED)

6.4.3 Bistable Loop Error (CONTINUED)

6.4.3.10 Setpoint Determination

A maximum setpoint (SP_max) value will be determined based on the value defined for AV in the previous section:

$$SP_max_volts := AV_volts - LAnf_BS_pos$$

$$SP_max_volts = 6.047 \quad \text{volts}$$

This value expressed in mR/hr is:

$$SP_max_mR := 10^{\left(\frac{SP_max_volts \cdot 5}{10}\right) - 1}$$

$$SP_max_mR = 105.61$$

Where;

$$SP_max_volts + LAn_BS_pos = 6.704 \quad \text{volts}$$

or converting to mR/hr

$$10^{\left[\frac{(SP_max_volts + LAn_BS_pos) \cdot 5}{10}\right] - 1} = 224.86 \quad \text{mR/hr}$$

and

$$SP_max_volts - LAn_BS_neg = 5.235 \quad \text{volts}$$

or converting to mR/hr

$$10^{\left[\frac{(SP_max_volts - LAn_BS_neg) \cdot 5}{10}\right] - 1} = 41.466 \quad \text{mR/hr}$$

APPENDIX A - EVALUATION FOR SAFETY LIMIT BASED ON ICRP-2 METHODOLOGY

6) COMPUTATIONS / ANALYSES (CONTINUED)

6.4) ACCURACY CALCULATION (CONTINUED)

6.4.4 Indicator Loop Error

6.4.4.1 Output Calibration Testing Error (OCTe)

$OCTe_\% := 0.1$ % of FS

$$OCTe := \frac{OCTe_\%}{100} \cdot 10$$

$OCTe = 0.01$ volts

6.4.4.2 Acceptance Band (Ab)

$Ab_\% := 3$ % of FS

$$Ab := \frac{Ab_\%}{100} \cdot 10$$

$Ab = 0.3$ volts

6.4.4.3 Indicator Movement Error (INDMe)

$INDMe_\% := 2.0$ % of eq. FS

$$INDMe := \frac{INDMe_\%}{100} \cdot 10$$

$INDMe = 0.2$ volts

6.4.4.4 Normal Measurable Accuracy (Anf_ind)

The indicator is calibrated by varing a potentiometer on the ratemete. The detector and ratementer electronics are not part of this calibration, therefore these errors are not included in the calculation of Anf_ind.

$$Anf_ind := \sqrt{INDMe^2 + OCTe^2 + Ab^2}$$

$Anf_ind = 0.361$ volts

6) COMPUTATIONS / ANALYSES (CONTINUED)

6.4) ACCURACY CALCULATION (CONTINUED)

6.4.4 Indicator Loop Error (CONTINUED)

6.4.4.5 Normal Measurable Loop Accuracy (LAnf_ind)

$$LAnf_ind_pos := \sqrt{Anf_RM_RD_pos^2 + Anf_ind^2}$$

$LAnf_ind_pos = 0.666$ volts

$$LAnf_ind_neg := \sqrt{Anf_RM_RD_neg^2 + Anf_ind^2}$$

$LAnf_ind_neg = 0.816$ volts

6.4.4.6 Indicator Reading Error (INDRe)

$INDRe_pos_\% := 1.94$ % of span

$$INDRe_pos := \frac{INDRe_pos_\%}{100} \cdot 10$$

$INDRe_pos = 0.194$ volts

$INDRe_neg_\% := 1.58$ % of span

$$INDRe_neg := \frac{INDRe_neg_\%}{100} \cdot 10$$

$INDRe_neg = 0.158$ volts

6.4.4.7 Normal Loop Accuracy (LAn_ind)

$$LAn_ind_pos := \sqrt{LAnf_ind_pos^2 + Eed_pos^2 + Epc_pos^2 + Efac_pos^2 + INDRe_pos^2}$$

$LAn_ind_pos = 0.707$ volts

$$LAn_ind_neg := \sqrt{LAnf_ind_neg^2 + Eed_neg^2 + Epc_neg^2 + Efac_neg^2 + INDRe_neg^2}$$

$LAn_ind_neg = 0.845$ volts

6) COMPUTATIONS / ANALYSES (CONTINUED)

6.4) ACCURACY CALCULATION (CONTINUED)

6.4.4 Indicator Loop Error (CONTINUED)

6.4.4.7 Normal Loop Accuracy (LAn_ind) (continued)

LAn_ind can also be expressed in terms of % reading error based on the transfer function given in reference 13 (See Section 6.6.1.4).

$$LAn_ind_pos_\% := -\left[1 - 10^{(LAn_ind_pos)\cdot 0.5}\right]\cdot 100$$

$LAn_ind_pos_\% = 125.726$ % reading

$$LAn_ind_neg_\% := -\left[1 - 10^{(-LAn_ind_neg)\cdot 0.5}\right]\cdot 100$$

$LAn_ind_neg_\% = -62.206$ % reading

6.4.4.8 Loop Accident Accuracy (LAa_ind)

$LAa_ind_pos_\% := LAn_ind_pos_\%$

$LAa_ind_pos_\% = 125.726$ % reading

$LAa_ind_neg_\% := LAn_ind_neg_\%$

$LAa_ind_neg_\% = -62.206$ % reading

SEQUOYAH NUCLEAR PLANT
BRANCH/PROJECT IDENTIFIER 0-RE-90-102/103

APPENDIX A - EVALUATION FOR SAFETY LIMIT BASED ON ICRP-2 METHODOLOGY

8) SUMMARY OF RESULTS (BISTABLE)

X APPLICABLE TO ALL LOOPS LISTED ON SHEETS 13

NA APPLICABLE ONLY TO LOOPS: _____

SAFETY LIMIT	6.868 (271.62 mR/hr)	MARGIN 0.164 (46.76 mR/hr)
PV = ACCIDENT	6.704 (224.86 mR/hr)	
PV = SEISMIC	NA	
PV = NORMAL	6.704 (224.86 mR/hr)	
$SETPOINT_{MAX}$*	6.047 (105.61 mR/hr)	
PV = NORMAL	5.235 (41.466 mR/hr)	
PV = SEISMIC	NA	
PV = ACCIDENT	5.235 (41.466 mR/hr)	

AV_{UPPER} = 6.69 (221 mR/hr) + Aas = NA

AV_{LOWER} = NA - Aas = NA

ALL VALUES SHOWN ARE IN Volts UNLESS NOTED OTHERWISE

(REFER TO ACCURACY DISCUSSION, SECTION 6.4.3 FOR CLARIFICATION OF ABOVE)

* THE ERROR IN VOLTS IS CONSTANT OVER THE ENTIRE SPAN. THEREFORE THE ERROR AT THE BISTABLE SETPOINT WILL BE A CONSTANT %SETPOINT, REGARDLESS OF WHETHER THE SETPOINT REMAINS CONSTANT.

SEQUOYAH NUCLEAR PLANT
BRANCH/PROJECT IDENTIFIER 0-RE-90-102/103

APPENDIX A - EVALUATION FOR SAFETY LIMIT BASED ON ICRP-2 METHODOLOGY

8) SUMMARY OF RESULTS (INDICATED)

X APPLICABLE TO ALL LOOPS LISTED ON SHEETS 13

NA APPLICABLE ONLY TO LOOPS: _____

REQUIRED ACCURACY NA

MARGIN NA

PV = ACCIDENT 125.726

PV = SEISMIC NA

PV = NORMAL 125.726

INDICATED VALUE

PV = NORMAL -62.206

PV = SEISMIC NA

PV = ACCIDENT -62.206

MARGIN NA

REQUIRED ACCURACY NA

AV_{UPPER} = NA + Aas = NA

AV_{LOWER} = NA - Aas = NA

ALL VALUES SHOWN ARE IN % READING

(REFER TO ACCURACY DISCUSSION, SECTION 6.4.4 FOR CLARIFICATION OF ABOVE)

SEQUOYAH NUCLEAR PLANT
BRANCH/PROJECT IDENTIFIER 0-RE-90-102/103

9) CONCLUSIONS

X APPLICABLE TO ALL LOOPS LISTED ON SHEETS 13

NA APPLICABLE ONLY TO LOOPS: NA

The demonstrated accuracy of +0.632 volts (+LAn) and -0.727 volts (-LAn) for bistable loops 0-R-90-102 and 103 will not result in challenging the upper safety limit of 375.49 mR/hr based on maintaining a bistable setpoint of ≤ 151 mR/hr. However, the current setpoint for this loop must be maintained ≤ 151mR/hr for Tech Spec Compliance. R1

This calculation defines an Allowable Value of 307 mR/hr that will replace the setpoint of ≤ 200 mR/hr defined in Tech Spec table 3.3-6 via Tech Spec Change 02-01. Loop Indication for 0-R-90-102 and 103 does not have a required accuracy and is therefore determined to be acceptable.

Appendix A of this calculation defines the Allowable Value and Setpoint requirements prior to NRC approval of Tech Spec Change 02-01.

TVAN CALCULATION COVERSHEET/CCRIS UPDATE

REV 0 EDMS/RIMS NO.	EDMS TYPE:	EDMS ACCESSION NO (N/A for REV. 0)
NEB 841206 237	calculations(nuclear)	B87 020402 003

Calc Title: Basis for Determining an Acceptable Setpoint for the Spent Fuel Pool Radiation Monitor Setpoint

CALC ID	TYPE	PLANT	BRANCH	NUMBER	CUR REV	NEW REV	REVISION APPLICABILITY
CURRENT	CN	SQN	NTB	TIRPS181	R02	R03	Entire calc ☒
NEW	CN						Selected Pages ☐

ACTION	NEW ☐ REVISION ☒	DELETE ☐ RENAME ☐	SUPERSEDE ☐ DUPLICATE ☐	CCRIS UPDATE ONLY ☐ (D. V. & Approval Signatures Not Required)	No CCRIS Changes ☐ (For calc revision, CCRIS been reviewed and no CCRIS changes required)

UNITS	SYSTEMS	UNIDS
001 002	90	N/A

DCN,EDC,N/A	APPLICABLE DESIGN DOCUMENT(S)	CLASSIFICATION
EDC 20582A	SQN-DC-V-9.0	E

QUALITY RELATED?	SAFETY RELATED? (If yes, QR = yes)	UNVERIFIED ASSUMPTION	SPECIAL REQUIREMENTS AND/OR LIMITING CONDITIONS?	DESIGN OUTPUT ATTACHMENT?	SAR/TS AFFECTED
Yes ☒ No ☐	Yes ☒ No ☐	Yes ☐ No ☒	Yes ☐ No ☒	Yes ☐ No ☒	Yes ☐ No ☒

PREPARER PHONE NO	PREPARING ORG (BRANCH)	DESIGN VERIFICATION METHOD
751-4312	Mechanical Design	Design Verification

PREPARER SIGNATURE	DATE	CHECKER SIGNATURE	DATE
Doug Pollock Doug Pollock	3/12/02	Marc C. Berg Marc C. Berg CMB 3/14/02	3-12-02
DESIGN VERIFIER SIGNATURE	**DATE**	**APPROVAL SIGNATURE**	**DATE**
Marc C. Berg Marc C. Berg	3-12-02	John Thomas	3/25/02

STATEMENT OF PROBLEM/ABSTRACT

The purpose of this calculation is to determine the safety limit for the spent fuel pool radiation monitors. This calculation allows the use of a setpoint which will reduce or eliminate spurious trips and still not allow the safety limit to be exceeded.

The fuel pool area accident monitors (0-RE-90-102, 103) are provided to mitigate the offsite radiological consequences of a fuel handling accident. Upon detecting a radiation level that is higher than the setpoint level, the monitors initiate isolation of the auxiliary building ventilation exhaust and startup of the auxiliary building gas treatment system (ABGTS). This calculation determines the relationship between the exposure rate seen by these monitors due to a postulated fuel handling accident and the resulting unfiltered site boundary thyroid dose. The exposure rate at the detector locations will be due primarily to the noble gasses released in the accident while the thyroid dose is a result of the iodine released. From the relationship between offsite dose and exposure rate at the monitors, a maximum offsite dose can be predicted from any monitor safety limit; thus an acceptable safety limit can be determined on the basis of the offsite radiological consequences of a fuel handling accident.

Four cores were analyzed, a conventional core at 1500 EFPD, and a TPC at 510, 1020, and 1530 EFPD. The results show the minimum ratio of the exposure rate seen by the detector at spent fuel pool to the resulting site boundary thyroid dose (based on ICRP-2 dose conversion factors) to be 9.0541 (mR/hr)/rem. This ratio is based on the exposure rate seen by the detector at the greatest distance possible for an accident in the pool. This is clearly conservative and it also does not require both detectors to be operable. Thus the results will be valid for a situation where one of the two monitors is inoperable. Based on this ratio, a safety limit as high as (9.0541 mR/hr/rem)(30 rem) =2.7162E2 mR/hr will be sufficient to keep the thyroid dose below 10% of the 10CFR100 limit. That is, if one assumes a scenario in which the activity release results in an exposure rate at the detector less than 271.62 mR/hr, which does not result in the isolation of the ventilation system, then the resulting site boundary thyroid dose will not be greater than 30 rem. Note: The safety limit determined in this calculation does not take into account monitor inaccuracies or imprecision.

MICROFICHE/EFICHE Yes ☒ No ☐ FICHE NUMBER(S) TVA-F-T000947

☐ LOAD INTO EDMS AND DESTROY

☒ LOAD INTO EDMS AND RETURN CALCULATION TO CALCULATION LIBRARY. ADDRESS:

☐ LOAD INTO EDMS AND RETURN CALCULATION TO:

Attachment No. 1 Sheet 1 of 2
Identifier 0-RE-90-102/103

Results

Table 3 Site Boundary Thyroid Dose Due to an Unfiltered Release:

	1500 EFPD Conventional Core	510 EFPD TPC	1020 EFPD TPC	1530 EFPD TPC
ICRP-02	589.8	634.5	497.2	342.0
ICRP-30	426.7	458.8	359.6	247.4

Table 4 Exposure Rate Seen at Detectors Due to Release

	Case #1	Case #2	Case #3
Conventional core (1500 EFPD)			
Detector #1	2.2970E+04	3.7594E+05	3.3775E+05
Detector #2	2.5284E-04	3.3266E+01	5.3778E+03
510 EFPD TPC			
Detector #1	2.5448E+04	4.2278E+05	3.7952E+05
Detector #2	2.8103E-04	3.6527E+01	6.0485E+03
1020 EFPD TPC			
Detector #1	1.9498E+04	3.2105E+05	2.8835E+05
Detector #2	2.1601E-04	2.8148E+01	4.5930E+03
1530 EFPD TPC			
Detector #1	1.3239E+04	2.1645E+05	1.9449E+05
Detector #2	1.4699E-04	1.9202E+01	3.0965E+03

Table 5 The ratio of the exposure rate at the detector to the dose at the site boundary is:

1500 EFPD Conventional core:
- ICRP-2 5.3778E+03mR/hr / 589.8 rem = 9.1180(mR/hr)/rem
  - Safety Limit = 9.1180(mR/hr)/rem (30 rem) = 2.7354E+02 mR/hr
- ICRP-30 5.3778E+03mR/hr / 426.7 rem = 12.6032(mR/hr)/rem
  - Safety Limit = 12.6032(mR/hr)/rem (30 rem) = 3.7810E+02 mR/hr

510 EFPD TPC:
- ICRP-2 6.0485E+03mR/hr / 634.5 rem = 9.5327(mR/hr)/rem
  - Safety Limit = 9.5327(mR/hr)/rem (30 rem) = 2.8598E+02 mR/hr
- ICRP-30 6.0485E+03mR/hr / 458.8 rem = 13.1833(mR/hr)/rem
  - Safety Limit = 13.1833(mR/hr)/rem (30 rem) = 3.9550E+02 mR/hr

1020 EFPD TPC:
- ICRP-2 4.5930E+03mR/hr / 497.2 rem = 9.2377(mR/hr)/rem
  - Safety Limit = 9.2377(mR/hr)/rem (30 rem) = 2.7713E+02 mR/hr
- ICRP-30 4.5930E+03mR/hr / 359.6 rem = 12.7725(mR/hr)/rem
  - Safety Limit = 35.3277(mR/hr)/rem (30 rem) = 3.8318E+02 mR/hr

1530 EFPD TPC:
- ICRP-2 3.0965E+03mR/hr / 342.0 rem = 9.0541(mR/hr)/rem
  - Safety Limit = 9.0541(mR/hr)/rem (30 rem) = 2.7162E+02 mR/hr
- ICRP-30 3.0965E+03mR/hr / 247.4 rem =12.5162(mR/hr)/rem
  - Safety Limit = 12.5162(mR/hr)/rem (30 rem) = 3.7549E+02 mR/hr

The shaded values are the exposure rates at the detector location when the released activity reaches the surface of the pool in the case where the accident occurs in the corner of the pool farthest from the detector. This corresponds to the case in which one detector is inoperable. For an accident occurring at any other location in the pool, the detector will read higher than the shaded values when the released activity reaches the surface of the pool.