NEDO-33084
Revision 1
Class I
DRF 0000-0007-3896
August, 2003

ESBWR Design Description

Approved: _____

A. S. Rao, Project Manager, ESBWR

INFORMATION NOTICE

This is a non-proprietary version of the document NEDC-33084P, which has the proprietary information removed. Portions of the document that have been removed are indicated by an open and closed double bracket as shown here [[{3}]]. The superscript notation {3} refers to Paragraph (3) of the original affidavit provided with the proprietary version. Paragraph (3) documents the basis for the proprietary determination.

IMPORTANT NOTICE REGARDING CONTENTS OF THIS REPORT

PLEASE READ CAREFULLY

Neither the General Electric Company nor any of the contributors to this document:

a. Makes any warranty or representation, express or implied, with respect to the accuracy, completeness, or usefulness of the information contained in this document, or that the use of any information, apparatus, method, or process disclosed in this document may not infringe privately owned rights;
or

b. Assumes any liabilities, including but not limited to nuclear liability, with respect to the use of, or for damages resulting from the use of any information, apparatus, method, or process disclosed in this document.

This work was performed partially as part of a contract between various utilities and GE for "ESBWR Development".

ACKNOWLEDGMENTS

This report is an update of the ESBWR Product Definition Report (NEDC-32930P). The authors of the ESBWR Product Definition Report are:

P.A. Bautista
R.C. Challberg
Y.K. Cheung
J.P. Combes
C. Degrave
M.T. Dominguez
A.W. Fanning
J.F. Galtman
R.E. Gamble
P. Genay
D.M. Gluntz
T.S. Higa
A.I. Illescas
M.D. Llanos
S.S. Khorana
M. Martin-Onraet
E.E. Nichols
T.T. Nguyen
I.D. Poppel
A.S. Rao
H.A. Upton

ESBWR Design Description

Table of Contents

Table of Contents iii

Glossary of Acronyms vi

1. Introduction 1

2. Core and Vessel Design
   - 2.1 Fuel Bundle Design 2.1-1
   - 2.2 Core Design 2.2-1
   - 2.3 Natural Circulation Design Recirculation Flow 2.3-1
   - 2.4 Reactor System - Internal Components 2.4-1
   - 2.5 Reactor System - Reactor Pressure Vessel 2.5-1
   - 2.6 Reactor Heat Balances 2.6-1
   - 2.7 Steam Separation and Drying System 2.7-1
   - 2.8 Principal NSSS Trip Setpoints and Trip-Response Action 2.8-1

3. Key Nuclear Island Mechanical Systems Description
   - 3.1 Nuclear Boiler System 3.1-1
   - 3.2 Control Rod Drive System 3.2-1
   - 3.3 Isolation Condenser System 3.3-1
   - 3.4 Standby Liquid Control System 3.4-1
   - 3.5 Reactor Water Cleanup/Shutdown Cooling System 3.5-1
   - 3.6 Fuel and Auxiliary Pools Cooling System 3.6-1
   - 3.7 Reactor Component Cooling Water System 3.7-1
   - 3.8 Plant Service Water System 3.8-1

4. Safety System Design
   - 4.1 Gravity-Driven Cooling System 4.1-1
   - 4.2 Passive Containment Cooling System 4.2-1

5. Containment Design and Support Systems
   - 5.1 Containment Structure, System and Arrangement Design 5.1-1
   - 5.2 Flammability Control System 5.2-1
   - 5.3 Drywell Cooling System 5.3-1
   - 5.4 Containment Atmospheric Control System 5.4-1
   - 5.5 Features Provided for Prevention and Mitigation of Severe Accident 5.5-1

6. Reactor Building and Auxiliary Fuel Building Design
6.1 Reactor Building Structure Design 6.1-1
6.2 Auxiliary Fuel Building Structure Design 6.2-1

7. Electrical Power and Reactor Trip System Design
7.1 Station Electrical Power Distribution System 7.1-1
7.2 Reactor Trip System 7.2-1

8. Support and Auxiliary Systems
8.1 Offgas System 8.1-1
8.2 Fire Protection System 8.2-1

9. Turbine Island Design Description
9.1 Steam and Power Conversion System (Reactor-to-Condenser) 9.1-1
9.2 Condensate and Feedwater System (Condenser-to-Reactor) 9.2-1

10. Reactor Refueling and Servicing
10.1 Reactor Refueling 10.1-1
10.2 Inclined Fuel Transfer System 10.2-1
10.3 Servicing Equipment and Systems 10.3-1

Appendix A System Schematic Diagrams
Chapter 3.1 Nuclear Boiler System
Chapter 3.2 Control Rod Drive System
Chapter 3.3 Isolation Condenser System
Chapter 3.4 Standby Liquid Control System
Chapter 3.5 Reactor Water Cleanup/Shutdown Cooling System
Chapter 3.6 Fuel and Auxiliary Pools Cooling System
Chapter 3.7 Reactor Component Cooling Water System
Chapter 3.8 Plant Service Water System
Chapter 4.1 Gravity Driven Cooling System
Chapter 4.2 Passive Containment Cooling System
Chapter 5.1 Containment System
Chapter 5.3 Drywell Cooling System
Chapter 5.4 Containment Atmospheric Control system
Chapter 8.1 Offgas System
Chapter 8.2 Fire Protection System
Chapter 9.1 Proposed (Simplified) Heat Cycle
Chapter 9.2 Condensate/Feedwater System
Chapter 9.2 Cooling Water Systems

Appendix B Arrangement Drawings
Section A-A (0-180°) Reactor Building, Containment and Auxiliary Fuel Building
Section B-B (90°-270°) Reactor Building, Containment and Auxiliary Fuel Building
Floor Elevation 33600, Reactor Building, Containment and Auxiliary Fuel Building
Floor Elevation 26600, Reactor Building, Containment and Auxiliary Fuel Building
Floor Elevation 17500, Reactor Building, Containment and Auxiliary Fuel Building
Floor Elevation 13570, Reactor Building, Containment and Auxiliary Fuel Building
Floor Elevation 4650, Reactor Building, Containment and Auxiliary Fuel Building
Floor Elevation -1300, Reactor Building, Containment and Auxiliary Fuel Building
Floor Elevation -6400, Reactor Building, Containment and Auxiliary Fuel Building
Floor Elevation -10000, Reactor Building, Containment and Auxiliary Fuel Building

Glossary of Acronyms

10CFR	Title 10, Code of Federal Regulations
A/D	Analog-to-Digital
ABS	Auxiliary Boiler System
ac	Alternating Current
AC	Air Conditioning
ACF	Automatic Control Function
ACS	Atmospheric Control System
ADS	Automatic Depressurization System
AFIP	Automated Fixed In-Core Probe
AHS	Auxiliary Heat Sink
AISC	American Institute of Steel Construction
AISI	American Iron and Steel Institute
ALARA	As Low As Reasonably Achievable
ALWR	Advanced Light Water Reactor
ANS	American Nuclear Society
ANSI`	American National Standards Institute
API	American Petroleum Institute
APRM	Average Power Range Monitor
APRS	Automatic Power Regulator System
ARI	Alternate Rod Insertion
ARMS	Area Radiation Monitoring System
ASA	American Standards Association
ASD	Adjustable Speed Drive
ASHRAE	American Society of Heating, Refrigerating, and Air Conditioning Engineers
ASME	American Society of Mechanical Engineers
ATLM	Automated Thermal Limit Monitor
ATWS	Anticipated Transients Without Scram
AWS	American Welding Society
AWWA	American Water Works Association
B&PV	Boiler and Pressure Vessel
BAF	Bottom of Active Fuel
BOP	Balance of Plant
BPU	Bypass Unit
BRES	Battery Room Exhaust
BTP	NRC Branch Technical Position
BWR	Boiling Water Reactor
BWROG	Boiling Water Reactor Owners Group
C&FS	Condensate and Feedwater System
C&I	Control and Instrumentation
C/C	Cooling and Cleanup
CACS	Containment Atmospheric Control System
CAMS	Containment Atmospheric Monitoring System
CDF	Core Damage Frequency
CFR	Code of Federal Regulations

CIRC	Circulating Water System
CIV	Combined Intermediate Valve
CLAVS	Clean Area Ventilation System
CMU	Control Room Multiplexing Unit
COL	Combined Operating License
CONAVS	Controlled Area Ventilation System
CPR	Critical Power Ratio
CPS	Condensate Purification System
CPU	Central Processing Unit
CRD	Control Rod Drive
CRDHS	Control Rod Drive Hydraulic System
CREHVAC	Control Room Envelope HVAC
CRT	Cathode Ray Tube
CS&TS	Condensate Storage and Transfer System
CST	Condensate Storage Tank
CV	Containment Vessel
CVCF	Constant Voltage Constant Frequency
CWS	Chilled Water System
CWS	Circulating Water System
D-RAP	Design Reliability Assurance Program
DAC	Design Acceptance Criteria
DAW	Dry Active Waste
dc	Direct Current
DCS	Drywell Cooling System
DF	Decontamination Factor
DG	Diesel-Generator
DM&C	Digital Measurement and Control
DOI	Dedicated Operators Interface
DOT	Department of Transportation
dPT	Differential Pressure Transmitter
DPV	Depressurization Valve
DR&T	Design Review and Testing
DTM	Digital Trip Module
DW	Drywell
EFDS	Equipment and Floor Drainage System
EHC	Electro-hydraulic Control (Pressure Regulator)
EMUX	Essential Multiplexing System
ENS	Emergency Notification System
EOC	Emergency Operations Center
EOC	End of Cycle
EOF	Emergency Operations Facility
EOP	Emergency Operating Procedures
EPDS	Electric Power Distribution System
EPG	Emergency Procedure Guidelines
ERM	Engineering Review Memorandum
ESF	Engineered Safety Feature

ETS	Emergency Trip System
FAPCS	Fuel and Auxiliary Pools Cooling System
FATT	Fracture Appearance Transition Temperature
FCM	File Control Module
FCS	Flammability Control System
FCU	Fan Cooling Unit
FDDI	Fiber Distributed Data Interface
FFWTR	Final Feedwater Temperature Reduction
FHA	Fire Hazards Analysis
FMCRD	Fine Motion Control Rod Drive
FMDC	Fine Motion Driver Cabinet
FMEA	Failure Modes and Effects Analysis
FPS	Fire Protection System
FTDC	Fault-Tolerant Digital Controller
FTS	Fuel Transfer System
FWCS	Feedwater Control System
GCS	Generator Cooling System
GDC	General Design Criteria
GDCS	Gravity-Driven Cooling System
GE	General Electric Company
GE-NE	GE Nuclear Energy
GEN	Main Generator System
GETAB	General Electric Thermal Analysis Basis
GM	Geiger-Mueller Counter
GM-B	Beta-Sensitive GM Detector
GSIC	Gamma-Sensitive Ion Chamber
GSOS	Generator Sealing Oil System
HCU	Hydraulic Control Unit
HCW	High Conductivity Waste
HDVS	Heater Drain and Vent System
HEI	Heat Exchange Institute
HEPA	High Efficiency Particulate Air/Absolute
HFE	Human Factors Engineering
HGCS	Hydrogen Gas Cooling System
HIC	High Integrity Container
HID	High Intensity Discharge
HIS	Hydraulic Institute Standards
HP	High Pressure
HPNSS	High Pressure Nitrogen Supply System
HSSS	Hardware/Software System Specification
HVAC	Heating, Ventilation and Air Conditioning
HVS	High Velocity Separator
HWCS	Hydrogen Water Chemistry System
HWS	Hot Water System
HX	Heat Exchanger
I&C	Instrumentation and Control

I/O	Input/Output
IAS	Instrument Air System
IASCC	Irradiation Assisted Stress Corrosion Cracking
IC	Isolation Condenser
ICD	Interface Control Diagram
ICS	Isolation Condenser System
IED	Instrument and Electrical Diagram
IEEE	Institute of Electrical and Electronic Engineers
IGSCC	Intergranular Stress Corrosion Cracking
IIS	Iron Injection System
IOP	Integrated Operating Procedure
IRM	Intermediate Range Monitor
ISA	Instrument Society of America
ISI	In-Service Inspection
ISLT	In-Service Leak Test
ISO	International Standards Organization
ITAAC	Inspections, Tests, Analyses and Acceptance Criteria
LAPP	Loss of Alternate Preferred Power
LCW	Low Conductivity Waste
LD	Logic Diagram
LD&IS	Leak Detection and Isolation System
LFCV	Low Flow Control Valve
LMU	Local Multiplexer Unit
LOCA	Loss-of-Coolant-Accident
LOPP	Loss of Preferred Power
LP	Low Pressure
LPCI	Low Pressure Coolant Injection
LPFL	Low Pressure Flooder
LPRM	Local Power Range Monitor
LRS	Liquid Radwaste System
LWMS	Liquid Waste Management System
MAPLHGR	Maximum Average Planar Linear Heat Generation Rate
MAPRAT	Maximum Average Planar Ratio
MCC	Motor Control Center
MCES	Main Condenser Evacuation System
MCPR	Minimum Critical Power Ratio
MCR	Main Control Room
MCRCWS	Main Control Room Chilled Water System
MLHGR	Maximum Linear Heat Generation Rate
MMI	Man-Machine Interface
MMIS	Man-Machine Interface Systems
MOV	Motor-Operated Valve
MPC	Maximum Permissible Concentration
MPL	Master Parts List
MS	Multiplexing System
MSIV	Main Steam Isolation Valve

MSL	Main Steamline
MSV	Mean Square Voltage
MTTR	Mean Time To Repair
MUX	Multiplexing
MWS	Makeup Water System
NBR	Nuclear Boiler Rated
NBS	Nuclear Boiler System
NDE	Nondestructive Examination
NEMS	Non-Essential Multiplexing System
NFPA	National Fire Protection Association
NIST	National Institute of Standard Technology
NMS	Neutron Monitoring System
NOV	Nitrogen Operated Valve
NPHS	Normal Power Heat Sink
NPSH	Net Positive Suction Head
NRC	Nuclear Regulatory Commission
NSSS	Nuclear Steam Supply System
O&M	Operation and Maintenance
O-RAP	Operational Reliability Assurance Program
OBCV	Overboard Control Valve
OGS	Offgas System
OHLHS	Overhead Heavy Load Handling System
OIS	Oxygen Injection System
OLU	Output Logic Unit
ORNL	Oak Ridge National Laboratory
OSC	Operational Support Center
OSHA	Occupational Safety and Health Administration
OSI	Open Systems Interconnect
P&ID	Piping and Instrumentation Diagram
PA/PL	Page/Party-Line
PABX	Private Automatic Branch (Telephone) Exchange
PAM	Post Accident Monitoring
PASS	Post Accident Sampling System
PCC	Passive Containment Cooling
PCCS	Passive Containment Cooling System
PFD	Process Flow Diagram
PGA	Peak Ground Acceleration
PGCS	Power Generation and Control System
PM	Preventive Maintenance
PMCS	Performance Monitoring and Control System
PMF	Probable Maximum Flood
PMP	Probable Maximum Precipitation
PQCL	Product Quality Check List
PRA	Probabilistic Risk Assessment
PRMS	Process Radiation Monitoring System
PRNM	Power Range Neutron Monitoring

PSS	Process Sampling System
PSWS	Plant Service Water System
PWR	Pressurized Water Reactor
QA	Quality Assurance
RACC	Rod Action Control Cabinet
RAM	Reliability, Availability and Maintainability
RAPI	Rod Action and Position Information
RBCC	Rod Brake Controller Cabinet
RBCWS	Reactor Building Chilled Water System
RBS	Rod Block Setpoint
RBV	Reactor Building Vibration
RC&IS	Rod Control and Information System
RCC	Remote Communication Cabinet
RCCV	Reinforced Concrete Containment Vessel
RCCWS	Reactor Component Cooling Water System
RCPB	Reactor Coolant Pressure Boundary
REPAVS	Refueling and Pool Area Ventilation System
RFP	Reactor Feed Pump
RG	Regulatory Guide
RMCC	Remote Communication Cabinet
RMS	Root Mean Square
RMU	Remote Multiplexer Unit
RO	Reverse Osmosis
ROM	Read-only Memory
RPS	Reactor Protection System
RPV	Reactor Pressure Vessel
RRPS	Reference Rod Pull Sequence
RSM	Rod Server Module
RSS	Remote Shutdown System
RWCU/SDC	Reactor Water Cleanup/Shutdown Cooling
RWM	Rod Worth Minimizer
S/C	Digital Gamma-Sensitive GM Detector
S/D	Scintillation Detector
S/N	Signal-to-Noise
S/P	Suppression Pool
SAS	Service Air System
SB&PC	Steam Bypass and Pressure Control System
SBWR	Simplified Boiling Water Reactor
SCRRI	Selected Control Rod Run-In
SDC	Shutdown Cooling
SDS	System Design Specification
SEOA	Sealed Emergency Operating Area
SJAE	Steam Jet Air Ejector
SLCS	Standby Liquid Control System
SMU	SSLC Multiplexing Unit
SPDS	Safety Parameter Display System

SPTMS	Suppression Pool Temperature Monitoring System
SRM	Source Range Monitor
SRNM	Startup Range Neutron Monitor
SRO	Senior Reactor Operator
SRP	Standard Review Plan
SRS	Software Requirements Specification
SRS	Solid Radwaste System
SRSRO	Single Rod Sequence Restriction Override
SRV	Safety Relief Valve
SSC	Structures, Systems, and Components
SSE	Safe Shutdown Earthquake
SSLC	Safety System Logic and Control
SWMS	Solid Waste Management System
TAF	Top of Active Fuel
TASS	Turbine Auxiliary Steam System
TBCE	Turbine Building Compartment Exhaust
TBE	Turbine Building Exhaust
TBLOE	Turbine Building Lube Oil Area Exhaust
TBS	Turbine Bypass System
TBVS	Turbine Building Ventilation System
TCCWS	Turbine Component Cooling Water System
TCS	Turbine Control System
TEMA	Tubular Exchanger Manufacturers' Association
TG	Turbine Generator
TGSS	Turbine Gland Seal System
TLOS	Turbine Lubricating Oil System
TLU	Trip Logic Unit
TMI	Three Mile Island
TMSS	Turbine Main Steam System
TSC	Technical Support Center
TSI	Turbine Supervisory Instrument
UBC	Unified Building Code
UHS	Ultimate Heat Sink
UL	Underwriter's Laboratories Inc.
UPS	Uninterruptible Power Supply
USS	United States Standard
UV	Ultraviolet
V&V	Verification and Validation
Vac	Volts Alternating Current
Vdc	Volts Direct Current
VDU	Video Display Unit
VWO	Valves Wide Open
XMFR	Transformer

1. Introduction

1.1 Purpose

The purpose of this report is to summarize the reference design of the ESBWR in order to supplement and complement the various submittals presented to the Nuclear Regulatory Commission (NRC) during the pre-application and certification phases. The pre-application phase is not an effort to have the final design reviewed and approved; leaving that effort up to the certification phase. The design is very similar to that which was submitted to the NRC in 1995 and documented by the Safety Analysis Report (SAR) for the SBWR. This report builds upon the original SAR and provides the changes that have been incorporated in the ESBWR over the last nine years.

The ESBWR SAR will be submitted during the certification phase and will document the design for design certification. This report is to be used for reference for the technology and TRACG evaluation until the SAR is submitted.

1.2 ESBWR Design

The ESBWR design was developed to address the need for a nuclear plant that is significantly simpler and more flexible than current designs – Table 1-1. A simpler design is expected to be less demanding on the operator and the safety systems necessary to handle a transient or an accident. A simpler design is also expected to be more economical to build and operate. Simplification of plant systems and structures has been the primary design goal of the ESBWR program.

One key challenge has been to improve the operators' capability to control and monitor the reactor systems, making his task easier and simpler.

However, the program has maintained a very pragmatic approach to a key challenge facing any new plant program – improved economics. Economics includes initial plant (systems and structures) cost, development costs, first plant design and licensing costs, operation and maintenance costs and any cost uncertainties associated with new components and designs. The basic approach has been to reduce the number of systems and components, while at the same time utilizing systems, components, processes and technologies from the already developed and operating Advanced Boiling Water Reactor (ABWR). This approach keeps the development costs low, first time design costs are minimized and cost uncertainties are reduced, while at the same time utilizing the latest designs and technologies.

Table 1-1. Key Attributes of the ESBWR Program

Key Attribute	Elements of Attribute	Design Features
Large Safety Margins	Design for no core uncovery No opening of relief valves during transients	Large water mass, no large pipes at or below core Long vessel
Simplification	Reduced systems and structures Simpler operation	Passive safety systems Eliminate recirculation pumps
Flexibility	Performance Margins Generic design for most sites	Large vessel/passive systems Site is nominal not bounding
Economics	Low plant cost Low development cost Licensing and first plant cost Operation/maintenance costs	Reduced materials and buildings ABWR/ SBWR features used Tested new components Reduced and simpler systems

A simplified design with improved economics is not enough; it also has to have the right performance characteristics to meet an owner's needs. Consequently the second key attribute of the design is flexibility. Construction flexibility is achieved by designing a plant that has the maximum amount of standardization without penalizing the majority of sites with unnecessary design features. Performance flexibility is achieved by designing the plant with the right amount of margins that give the operator the ability to operate the plant economically for the grid unique requirements.

1.3 What is the Design?

1.3.1 Plant Normal Operation

The ESBWR plant design relies on the use of natural circulation and passive safety features to enhance the plant performance and simplify the design. The use of natural circulation has allowed the elimination of several systems. Table 1-2 shows a comparison of some key plant features for several BWR designs. It shows that the full benefit of natural circulation has been achieved in the ESBWR. Also a new core arrangement allows a reduction in the number of control blades and control rod drives (CRD's). It also shows the minimum extrapolation from past to future designs.

Table 1-2. Comparison of Key Features

Parameter	BWR/4 Mk I (BF 3)	BWR/6 Mk III (Grand Gulf)	ABWR	SBWR	ESBWR
Power (MWt)	3293	3833	3926	2000	4000
Power (MWe)	1098	1290	1350	670	1380-1400*
Vessel height (m)	21.9	21.8	21.1	24.6	27.7
Vessel diameter (m)	6.4	6.4	7.1	6.0	7.1 (7112 mm)
Fuel bundles, number	764	800	872	732	1020
Active fuel height (m)	3.7	3.7	3.7	2.7	3.048
Power density (kw/l)	50	54.2	51	42	54
Number of CRDs	185	193	205	177	121

*depending on site conditions

The ESBWR has evolved over the last nine years from the original 670 MWe SBWR taking advantage of the economies of scale, enhancing the natural circulation core flow, retaining the original passive safety features, but adding to the simplification with enhanced safety and economics in mind. The approach to improving the commercial attractiveness of the ESBWR compared to the SBWR was to follow a multi-pronged approach by:

1) enhancing the overall plant performance
2) taking advantage of the modular design of the passive safety systems, and
3) reducing overall material quantities.

The ESBWR design has achieved a major plant simplification by eliminating the recirculation pumps. The use of natural circulation, along with the desire to maintain the same or better plant performance margins, resulted in the following key design features:

1) Opening the flow path between the downcomer and lower plenum
2) Use of shorter fuel - resulting in a reduced core pressure drop
3) Use of an improved steam separator to reduce pressure drops
4) Use of a 8.61 m chimney to enhance the driving head for natural circulation flow

The selection of the optimum power level was based on the desire to utilize the synergism between the ABWR and the ESBWR and to utilize existing design and technology from the ABWR - as an example using the same diameter pressure vessel. With this constraint, the SBWR core circumscribed diameter was increased, using the ABWR vessel diameter and leaving approximately the same size annulus as the earlier SBWR. The ESBWR core was then increased in size by adding fuel bundles to accommodate this increased diameter. The core was increased from 732 fuel assemblies, in the SBWR, to 1020 fuel assemblies, resulting in an optimum thermal power rating of 4000 MWt.

The selected power for the ESBWR would have required the addition of fuel assemblies and control rod drives (CRD) compared to the SBWR. However, the use of a new core lattice design reduced the number of CRDs from by about 50% and resulting in fewer drives than the original SBWR.

1.4 Plant Safety System

The ESBWR safety system design was extended to a higher power level by taking advantage of the modular design approach of the safety systems. The isolation condensers and the passive containment decay heat removal system, utilize simple heat exchangers. Any increase in power level only requires additional heat exchangers or tubes. The Gravity Driven Cooling System (GDCS), is not sensitive to power level and its capacity is primarily determined by containment geometrical considerations. Table 1-3 shows a comparison of safety systems for different plants.

1.4.1 High and Low Pressure Inventory Control

The ESBWR uses isolation condensers for high pressure inventory control and decay heat removal under isolated conditions. The isolation condenser system has four independent high pressure loops, each containing a heat exchanger that condenses steam on the tube side. The tubes are in a large pool, outside the containment. The steam line connected to the vessel is normally open and the condensate return line is normally closed. The four units are the same size as those previously tested for the SBWR.

The vessel is depressurized rapidly to allow multiple sources of safety and non-safety systems to provide water makeup. Typically in a BWR, rapid depressurization only results in the loss of half the reactor inventory, allowing the core to remain covered. Consequently, any makeup system has only to provide a slow water makeup to account for loss of inventory resulting from boil-off by decay heat.

For the ESBWR, the makeup water flows into the vessel by gravity (GDCS), instead of relying on pumps and their associated support systems. The ESBWR uses the Automatic Depressurization System (ADS) to depressurize the vessel. The GDCS pool capacity is primarily determined by containment geometrical considerations. The increased vessel diameter results in an increase of the lower drywell volume, consequently the GDCS pool volume increased by approximately 200 m^3 compared to the SBWR.

Table 1-3. Comparison of Safety Function/System

Function	Current Reactors	ESBWR	
	Safety Systems	Safety Systems	Non-Safety
High pressure inventory control	Motor and/or steam driven pumps with some vessel inventory loss and containment heatup	Isolation condensers conserve coolant inventory and avoid containment heatup	Multiple motor driven pumps
Depressurization and low pressure inventory control	Automatic depressurization system with complex cooling water systems	Diverse/redundant automatic depressurization system using gravity for inventory control	Diesel generator (DG) driven pumps
Containment Decay Heat Removal	DG driven pumped systems with complex cooling water systems	Completely passive condensers with substantial margins	DG or turbine driven pumps and cooling water
Fission product control and offsite doses	Double containment barriers and motor driven filter and purge systems	High in-containment natural removal mechanisms relying on removal, holdup and dilution	HVAC Systems
Severe accident features	Hydrogen control and features to limit corium impact. Vent added as backup.	Hydrogen control and large spreading area to limit corium impact	Ability to easily connect portable systems

1.4.2 Containment Heat Removal

Containment heat removal is provided by the Passive Containment Cooling System (PCCS), consisting of four safety related low pressure loops. Each loop consists of a heat exchanger open to the containment, a condensate drain line and a vent discharge line submerged in the suppression pool. The four heat exchangers, similar in design to the isolation condensers, are located in cooling pools external to the containment. The heat exchanger unit is only about 35% larger than the as-tested PCCS heat exchanger unit.

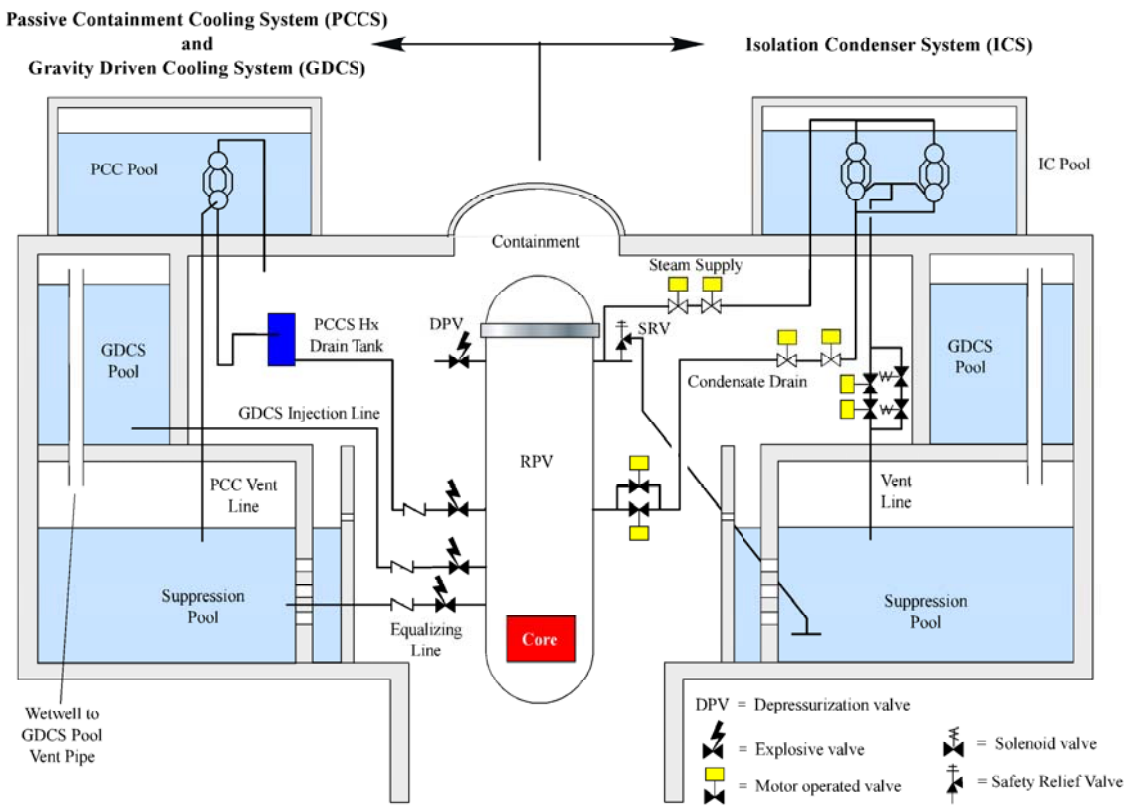

Figure 1-1. Schematic Diagram of PCCS, GDCS and ICS for ESBWR

One key new feature (GDCS pool location) effectively allows a larger wetwell-to-drywell volume ratio, without significantly enlarging the containment. The GDCS pools are located, topologically in the wetwell, and therefore are sealed off from the drywell. Figure 1-1 shows a schematic of this design. The airspace in the GDCS pool region and the wetwell are connected by pressure equalization lines. As a result of this connection, the additional airspace volume created by the GDCS pool draining, is now available for the wetwell gases to expand. This keeps the containment pressure low, following an accident.

1.5 Buildings and Structures

The ESBWR reactor building has been considerably simplified and reduced in volume, through use of passive systems. The primary safety-grade inventory control system - the isolation condenser - is a simple heat exchanger. The backup low pressure inventory control system - the gravity driven cooling system (GDCS) - is a fairly small pool of water. The passive containment decay heat removal system consists of modular heat exchangers, requiring no moving parts or valves. Most of the safety systems are now either in the containment or directly above it.

Any other systems in the plant are either non-safety grade or fairly small. This allows a significant reduction of the overall building volumes, especially for the expensive safety category buildings. A reduction of the reactor building volume and footprint has the added benefit of reducing the size of the building, which is on the critical path for construction.

The plant design has some added features that allow it to be very flexible in siting at different locations. The design is reasonably robust to account for evolving severe accident requirements by different safety authorities. The design of the plant structures allows application to different seismic requirements.

1.6 Plant Performance

The key design features described above, along with the use of the latest fuel designs, result in a substantial enhancement of the overall plant performance, as summarized in Table 1-4.

Table 1-4. Comparison of Performance for Various BWRs

Performance Parameter	Typical BWRs	SBWR	ESBWR
Average natural circulation flow per bundle [kg/s]	3.5 - 5.0	8.5	11.6
Power/Flow ratio at rated conditions [MW/(kg/s)]	0.25	0.31	0.34
Pressurization rate during fast transients [MPa/s]	0.8	0.4	0.4
Margin to SRV set point during fast isolation event [MPa]	SRV opens	0.52	0.32
Minimum water level following accident [m above fuel]	0.0 *	1.5	>2

* For internal pump plant, for jet pump plant value is -2m

This table shows that the use of natural circulation significantly improved several key performance parameters, while keeping others within the same range as those for forced circulation plants. Additionally, certain design changes made for the ESBWR, allowed the increase in power level from the SBWR without a decrease in margins - in some cases margins actually increased. These items are explained in the following paragraphs.

a. The higher average flow per bundle in the SBWR and ESBWR, is due to the unrestricted downcomer and shorter core. The increased flow from SBWR to ESBWR is due to a longer chimney and improved separator configuration.

b. In general, a reactor is more stable with a lower power/flow ratio. The ESBWR power/flow ratio is comparable to the operating BWRs at rated conditions. This is because the power per bundle is lower for the ESBWR and the natural circulation flow has been enhanced, as described above.

c. Slower pressurization rates in ESBWR and SBWR, are due to the large steam volume in the chimney and the use of Isolation Condensers (IC). Because of the slower pressurization rate and the use of IC's, there is adequate margin to prevent any Safety Relief Valves (SRV) from opening.

d. Due to larger vessels for the ESBWR and SBWR, the water level always covers the core following an accident.

e. The increase in containment pressure margin from SBWR to ESBWR is due to the relocation of the GDCS pool from the drywell to the wetwell.

The major advantage of the increased margins is the added flexibility the plant design gives the plant operator. These margins can be utilized to optimize fuel management or to modify plant features for individual utility needs without an increase in costs.

1.7 What is the Technology Basis for the Design?

The ESBWR has achieved its basic plant simplification by using innovative adaptations of operating plant systems, e.g., combining shutdown cooling and reactor water cleanup systems. In some cases the range of applicability of concepts has been extended, e.g., isolation condensers, natural circulation. The only major new concept or system is the passive containment cooling system (PCCS). In a few cases, even though the concepts have been proven over many years, some key components are new, e.g. depressurization valves (DPVs) and isolation condensers.

There is a high confidence that the design is proven because of the following basic approach to the design:

a) Utilize standard systems where practical, e.g. utilize features common to ABWR -vessel size, fine motion control rod drives, pressure suppression containment, fuel designs, materials and chemistry. See Table 1-5.

b) Extend the range of data to ESBWR parameters, e.g. separators, large channel two phase flow, isolation condensers (IC). See Figure 1-2.

c) Perform extensive separate effects, component and integral tests at different scales, for the only major new concept, the PCCS, and

d) Test any new components, e.g. squib actuated DPVs, IC heat exchangers, wetwell/drywell vacuum breakers

Table 1-5. Features and Technology Common to ABWR and ESBWR

Materials and water chemistry
Fine motion control rod drives
Multiplexing and fiber optic data transmission
Control room design
Plant layout for ease of maintenance
Reinforced concrete containment technology
Pressure suppression horizontal vents
Radwaste technologies
Computer codes and analytical methods
Information management technology

The basic technology for the safety systems has been developed over many years for the SBWR. The SBWR program involved scaling studies, separate effects tests, and component and integral tests in many countries and at different scales. It is probably the most extensive and comprehensive program plan for qualification of safety systems for nuclear power plants. The SBWR program has also been reviewed by regulators and has been found to be acceptable.

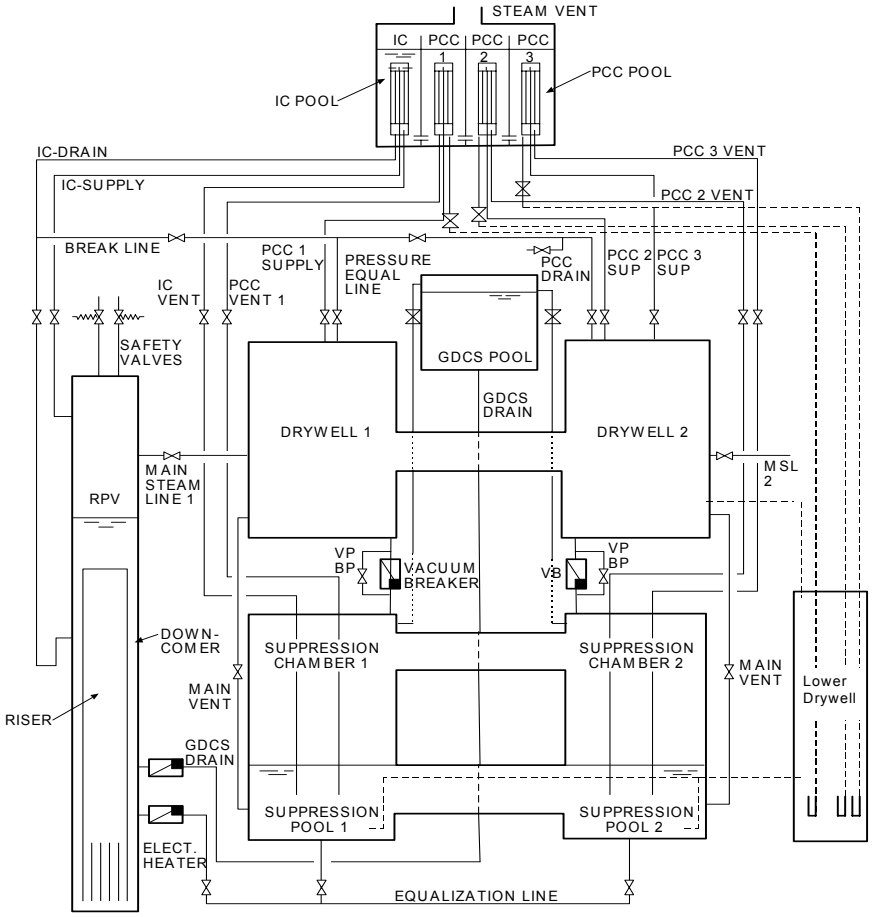

Figure 1-2: Schematic of PANDA, at PSI Switzerland, with ESBWR Features

The ESBWR program, as a result, inherited a technologically rich legacy of design, development and analysis work passed along from the SBWR program. No new systems needed to be designed for the ESBWR. Some systems required duty or rating up-sizings, to adjust to a higher power level. Many other systems simply needed addition of a duplicate equipment train. Instrumentation and Control (I&C) and radwaste systems are little changed. Plant electrical (even though significantly simplified), cooling water, and heat cycle systems benefited tremendously from the on-going systems work underway on all of GE's ABWR, FOAKE (First-of-a-Kind Engineering), and Lungmen design activities.

Figure 1-2 shows a schematic of the PANDA test facility, built at the Paul Scherrer Institute, for testing PCCS integral system performance for the ESBWR. This large full height facility was previously used for testing the SBWR features at 1:25 scale. The facility was modified with a scaling factor of 1:45 to simulate the ESBWR configuration, including the relocation of the gravity driven cooling system pool from the drywell to the wetwell. Eight transient system tests have been performed. The general objectives of these tests were:

1. Test impact new configuration features
2. Assess PCCS start-up and systems interaction impact

3. Distribution of steam and gases within the containment
4. Impact of hydrogen (simulated with helium) on PCCS performance

The test results can be summarized as follows:

1. PCCS shows wide margin in heat removal capacity and robust behavior
2. PCCS start-up was successfully demonstrated under extreme conditions with a smooth transition between different operation phases.
3. Trapped air only temporarily reduced PCCS performance
4. Helium injected to drywell adversely affected PCCS performance but not overall containment performance

1.8 Summary and Conclusions

The ESBWR has evolved to a design that has simplified systems and reduced quantities of system components. This is the result of taking full benefit of natural circulation, passive systems and economies of scale. The plant simplifications have been achieved while keeping the performance better than or equal to other plants.

2. Core and Vessel Design

The reactor assembly consists of the reactor pressure vessel, pressure-containing attachments, including the control rod drive (CRD) housings and in-core instrumentation housings, and the internal components described in the following sections. These internals include the core support components, the core shroud, the chimney, the steam separator and dryer and the various flow injection sparger assemblies distributed around the vessel inner perimeter and the shroud perimeter.

The reactor core is located near the bottom of the reactor assembly and consists of fuel assemblies, control rods or blades, neutron monitoring instrumentation and startup neutron sources. The fuel bundle and core are described in Sections 2.1 and 2.2, respectively.

In general, the reactor assembly is the same as designed for the SBWR except for the adaptation of the F lattice core configuration to the ESBWR. The F lattice takes advantage of larger control rods controlling more fuel assemblies per rod than the standard BWR fuel lattice. The result is an approximate 50% reduction in control rod drives. The F lattice is described in more detail in Sections 2.1 and 2.2 below. Other key differences relate to the size of the ESBWR core compared to the SBWR core. Both cores use the same BWR fuel bundle design, with the following exceptions.

Table 2.1 Core Comparison

Parameter	ABWR	SBWR	ESBWR
Power (MWt)	3926	2000	4000
Vessel diameter (m)	7.1	6.0	7.1 (7112 mm)
Fuel bundles (number)	872	732	1020
Active fuel height (m)	3.7	2.7	3.048
Power density (kw/l)	51	42	54
Number of CRDs	205	177	121

The ESBWR core requires a larger diameter core shroud. In addition to promote the coolant flow required for the increased power, the normal water level elevation with respect to the core is increased and the steam separators are modified for lower pressure drop. This increased elevation provides additional natural circulation driving head for the core flow. The reactor vessel inner diameter is increased from about 6 meters for the SBWR to about 7.1 meters for the ESBWR, keeping the diameter the same as ABWR. To allow adaptation of the F lattice some of the internal components are different in design from the SBWR and traditional BWR's and will be discussed in Section 2.3.

2.1 Fuel Bundle Design

2.1.1 General Description

The ESBWR fuel assemblies are the same as those of the SBWR except for the additional length. The fuel to be loaded in an ESBWR is any fuel design that meets the criteria defined in Appendix 4B of the ESBWR Safety Analysis Report (SAR).

The current reference core uses the GE12 fuel design. As new fuel designs evolve they will be adapted to the ESBWR configuration if significant benefits exist. Therefore at the time of initial core load the fuel design configuration may be advanced beyond the following discussion.

The fuel assembly consists of a fuel bundle and a channel which surrounds the fuel bundle. The GE12 design utilizes a 10x10 fuel rod array which includes 78 full-length fuel rods, 14 part length fuel rods and 2 large central water rods. Figure 2.1-1 illustrates the 10x10 fuel rod assembly. Note that, while the pattern is 10x10, there are actually only 94 rods due to the oversized water rods. The cast stainless steel lower tie plate includes a conical section which seats into the fuel support and a grid, which maintains the proper fuel rod spacing at the bottom of the bundle. The cast stainless steel upper tie plate maintains the fuel rod spacing at the top of the bundle and provides the handle that is used to lift the bundle for transferring the fuel bundle from one location to another. The bundle assembly is held together by eight tie rods located around the periphery of the fuel bundle. The identifying fuel assembly serial number is engraved on the top of the handle; no two assemblies bear the same serial number. A boss projects from one side of the handle to ensure proper orientation of the assembly in the core. Finger springs located between the lower tie plate and channel are utilized to control the bypass flow through that flow path.

The fuel assembly consists of the fuel bundle and the fuel channel which surrounds it. The fuel assemblies are arranged in the core to approximate a right circular cylinder. Each fuel assembly is supported vertically and laterally, by a fuel support piece at the bottom and, laterally by the top guide at the top. The fuel assembly weighs approximately 230 kg. With the fuel channel in place the lateral dimensions of the fuel assembly are approximately 136 mm x 136 mm. The active fuel length is approximately 3.048 m. The active fuel length of standard BWR fuel assemblies is approximately 3.66 m. The shorter fuel assembly provides a lower pressure drop which is important to enhance natural circulation flow.

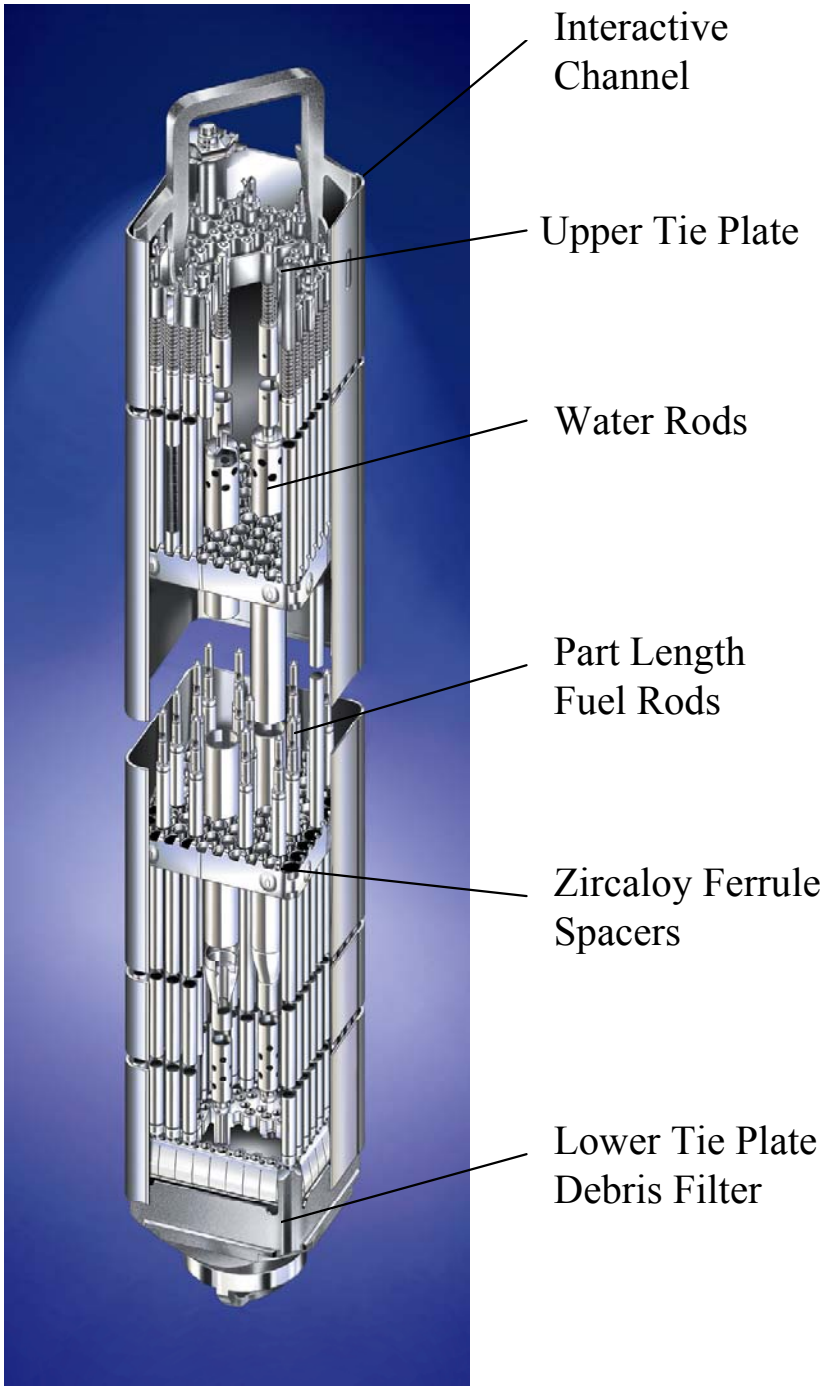

Figure 2.1-1 Typical 10 x 10 Fuel Assembly

2.1.2 Fuel Bundle

The fuel bundle consists of fuel rods and water rods arranged in a square array. The rods are laterally supported by grid-type fuel spacers at axial positions along the length and supported by tie plates at the top and bottom of the bundle. The lower tie plate provides vertical and lateral support for the lower end of the fuel and water rods. The lower tie plate transfers the vertical loads (weight of the fuel) to the fuel support. The lower tie plate also forms a cone shaped inlet configuration for the bundle coolant flow. The lower tie plate sits directly on the fuel support piece and forms a seal between the tie plate and fuel support.

The upper tie plate provides lateral support for the upper end of the fuel and water rods. The holes bored vertically through the upper tie plate position the fuel rods laterally at the upper end of the fuel bundle. The outer edge of the upper tie plate has alignment bosses for the purpose of providing a mating surface for the fuel channel and a post that extends vertically from each corner to aid in securing the fuel channel. A lifting handle is an integral part of the upper tie plate and is used for moving and handling the fuel bundle during initial core loading and subsequent refueling operations. The upper tie plate also aids in verifying fuel cell configuration and proper orientation of the fuel assembly with the cell.

2.1.3 Fuel Rods

Three mechanical types of fuel rods are used in a fuel bundle; tie rods, full length and part length rods. Each tie rod has a threaded lower end plug which screws into the lower tie plate and a threaded upper end plug which extends through a boss in the upper tie plate and is fastened with a nut. A lock tab washer is included under the tie rod nut to prevent rotation of the tie rod and nut. The part length rods also have lower end plugs which are threaded into the lower tie plate to prevent movement of the rods during shipping or handling with the bundle oriented horizontally. The tie rods support the weight of the assembly only during fuel handling operations. During operation, the assembly is supported by the lower tie plate.

The upper end plugs of the full-length fuel rods and water rods have extended shanks that protrude through bosses in the upper tie plate to accommodate the differential growth expected from high exposure operation. Expansion springs are also placed over each upper end plug shank to assure that the full-length fuel rods and water rods are properly seated in the lower tie plate.

Each fuel rod contains high density ceramic uranium dioxide fuel pellets stacked within Zircaloy cladding. The fuel rod is evacuated, backfilled with helium, and sealed with end plugs welded into each end. U-235 enrichments may vary from fuel rod to fuel rod within a bundle to reduce local peak-to-average fuel rod power ratios. Selected fuel rods within each bundle include small amounts of gadolinium as burnable poison along the length of the fuel rod to provide axial power shaping and cold shutdown zone shaping characteristics. Adequate free volume is provided within each fuel rod in the form of a pellet-to-cladding gap and a plenum region at the top of each fuel rod to accommodate thermal and irradiation expansion of the UO_2 and the internal pressures resulting from the helium fill gas, impurities, and gaseous fission products liberated over the life of the fuel. A plenum spring, or retainer, is provided in the

plenum space to minimize the movement of the column of fuel pellets inside the fuel rod during shipping and handling. A hydrogen getter is also provided in the plenum space as assurance against chemical attack from inadvertent admission of moisture or hydrogenous impurities into the fuel rod during manufacture.

The fuel rods are hollow cladding-tubes fabricated from Zircaloy. The standard fuel rod contains both enriched uranium oxide fuel pellets and natural uranium pellets. The natural uranium pellets are located at the top and bottom of each rod. These natural uranium pellets do not fission and act as a reflector at the core boundary. The tie rods hold the fuel bundle together and support the weight of the fuel bundle during fuel handling operations when the fuel assembly is hanging from the fuel grapple. The tie rods also contain active fuel as do the standard rods. The tie rods differ in that the lower end plugs thread into the lower tie plate and the upper end plugs are threaded and extend through the upper tie plate. Two rods on each side of the square configuration are tie rods. The hollow rods are water tubes, containing no fuel pellets.

2.1.4 Water Rods

Water rods are hollow Zircaloy tubes with several holes around the circumference near each end to allow coolant to flow through. The GE12 fuel design includes two large central water rods identical in size to replace eight fuel rod locations and provide improved moderation.

2.1.5 Fuel Spacer

The primary function of the spacer is to provide lateral support and spacing of the fuel rods, with consideration of thermal-hydraulic performance, fretting wear, strength, neutron economy, and producibility. The GE12 design includes a new high performance spacer developed to meet the low pressure drop requirement for a 10x10 design and to provide excellent critical power performance. Eight spacers are employed for the GE12 design for traditional length fuel but for the shorter fuel in the ESBWR core only six spacers are required. To minimize pressure drop, the spacer thickness has been reduced.

2.1.6 Finger Springs

Finger springs are employed to control the bypass flow through the channel-to-lower tie plate flow path.

2.1.7 Channels

The channel is composed of a Zirconium based material, and performs the following functions:

- Forms the fuel bundle flow path outer periphery for bundle coolant flow.
- Provides surfaces for control rod guidance in the reactor core.
- Provides structural stiffness to the fuel bundle during lateral loadings applied from fuel rods through the fuel spacers.

- Minimizes, in conjunction with the finger springs and bundle lower tie plate, coolant bypass flow at the channel/lower tie plate interface.

- Transmits fuel assembly seismic loadings to the top guide and fuel support of the core internal structures.

- Provides a heat sink during loss-of-coolant accident (LOCA).

- Provides a stagnation envelope for incore fuel sipping.

The channel is open at the bottom and makes a sliding seal fit on the lower tie plate surface. At the top of the channel, two diagonally opposite corners have welded tabs which support the weight of the channel on the threaded raised posts of the upper tie plate. One of these raised posts has a threaded hole. The channel is attached to the fuel bundle using the threaded channel fastener assembly, which also includes the fuel assembly positioning spring. Channel-to-channel spacing is assured by the fuel bundle spacer buttons located on the upper position of the channel adjacent to the control rod passage area. Channels for the GE12 design have thinner sides and thicker corners to provide sufficient strength in the regions of highest stress while minimizing material for neutron economy.

The channel provides a fixed flow path for boiling coolant and provides a barrier to separate two parallel flow paths. Approximately 90% of the coolant flows within the fuel channel to remove heat from the fuel rods and 10% provides cooling flow in the region between fuel assemblies, known as “bypass” flow. The channel also serves to guide and act as a bearing surface for the control rod blades and protects the fuel rods during handling. The fuel rod cladding tubes and channel are made of Zircaloy and all other structural components are stainless steel.

The length of active fuel for the ESBWR is 3048 mm. Most previous BWR designs used active fuel lengths of about 3658 mm .

2.2 Core Design

2.2.1 General Description of F Lattice Configuration

A new BWR core and control rod configuration has been developed which eliminates about 50% of the control rod drives, thus allowing more fuel bundles in the same size RPV. Current BWR core configurations use a square pitch pattern of control rods with four fuel assemblies controlled by one control rod. The new configuration uses a triangular pitch control rod pattern, with twelve fuel assemblies controlled by one large control rod and each corner of the array controlled by one half of an adjacent control rod. The new control rod is about twice the width or span of a standard BWR control rod.

Refer to Figure 2.2-1 for explanation of the evolution of the F lattice configuration. Refer to Figure 2.2-2 for the basic dimensions for one cell of sixteen fuel bundles. This concept has been readily adapted to the ESBWR due to the shorter core height, resulting in a design which requires no changes to the fuel or control rod drives, thereby eliminating a major test and development effort. Redesign of the core support internal components is necessary but feasible.

Figure 2.2-3 plots the ESBWR core layout. The core consists 1020 fuel assemblies consisting of 920 central region fuel bundles, 100 peripheral region fuel bundles and 121 control rods. Of the 100 peripheral region bundles, 40 are not adjacent to a control blade.

2.2.2 Instrumentation

Flux monitoring is by a combination of local power range monitors (LPRM), automatic fixed in-core probe sensors (AFIP) and startup range neutron monitors (SRNM). There are a number of flux monitoring assembly locations distributed across the core map. LPRMs are in-core fission chambers inside enclosed in-core tubes. The AFIPs are gamma thermometer detectors located within an LPRM assembly. The AFIPs provide a measure of axial power distribution. LPRM/AFIP assembly cover tubes contain holes to permit coolant flow for sensor cooling. The SRNMs are located in pressure barrier dry tubes.

2.2.3 Core Detail Description

Fuel assemblies are controlled by the control blades in groups of twelve. Four fuel assemblies are supported by a fuel support attached to the core plate. The few peripheral fuel assemblies not adjacent to a control rod are supported by the core plate using a single-assembly support. Lateral spacing of the fuel assemblies is provided by these lower support components. Lateral spacing at the core top is provided by the upper grid plate structure, known as the top guide. The top guide lateral support provided to the fuel is shown in Figure 2.2-4.

Each control rod guide tube is supported on a control rod drive (CRD) housing which penetrates the bottom of the vessel through a penetration nozzle, known as a stub tube, in the vessel bottom shell. The upper end of the control rod guide tube penetrates the core plate. The core plate provides lateral support to the guide tube at its upper end and directs most coolant flow to the fuel assemblies through the fuel support inlet orificing. Refer to Chapter 2.4 for more detail of the fuel support and orificing.

2.2.4 Control Rods

The control rod assemblies perform the functions of power shaping, reactivity control, and scram reactivity insertion for safety shutdown response. Power distribution in the core is controlled during operation of the reactor by manipulating selected patterns of control rods to counterbalance steam void effects at the top of the core.

The control rods are cruciform blades located between a group of sixteen fuel bundles and also control the corners of each sixteen bundle cell. One possible control rod design consists of a series of square tubes fusion welded together to form a cruciform control rod. Each square tube is filled with capsules containing boron carbide (B_4C) powder or hafnium rods. Figure 2.2-5 shows details of the control rod. Rollers at the top and bottom of the blade, guide the control rod and provide lateral support as the blade is inserted and withdrawn through the core. The boron carbide is in powder form in the capsules and is compacted to approximately 70% of theoretical density. The boron and hafnium material provides the "poison" for absorption of thermal neutrons. It should be noted that a hafnium control blade only uses hafnium in the outer few rows of absorber tubes as they experience most of the duty and an all hafnium blade would be too heavy.

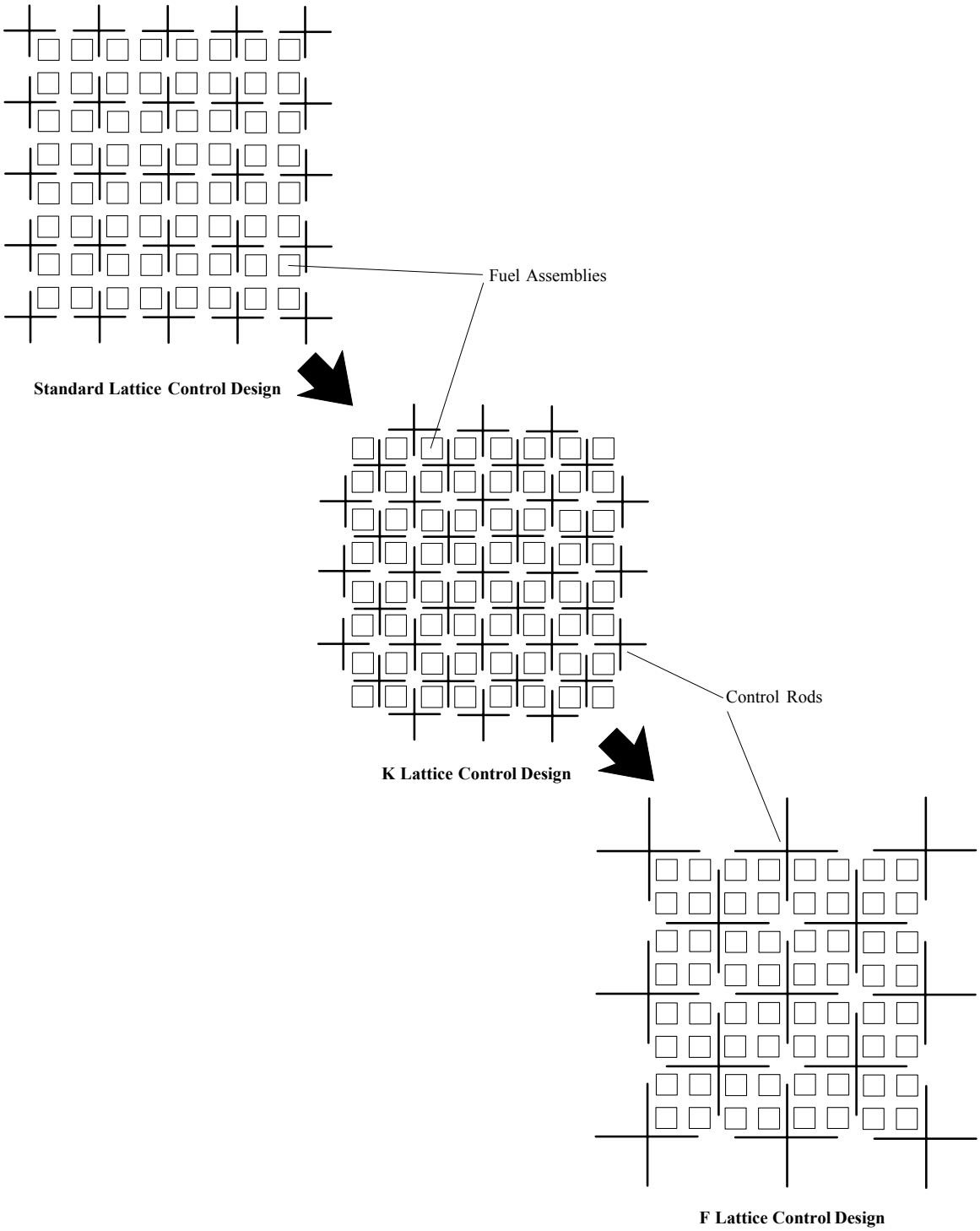

Figure 2.2-1 Evolution of the F Lattice for ESBWR

[[

{3}]]

Figure 2.2-2 F Lattice Configuration

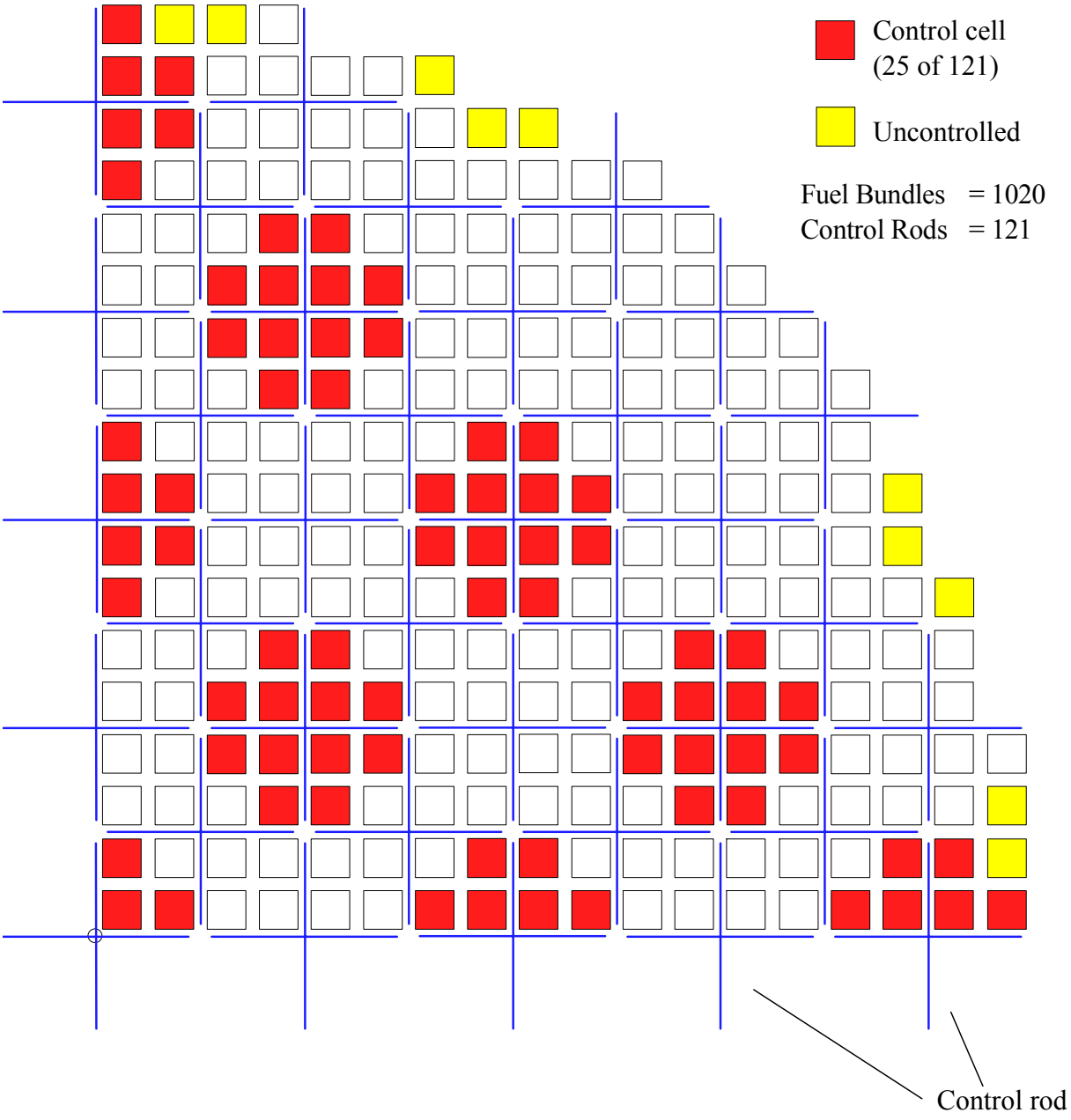

Figure 2.2-3 ESBWR Core Configuration

1/4 Core

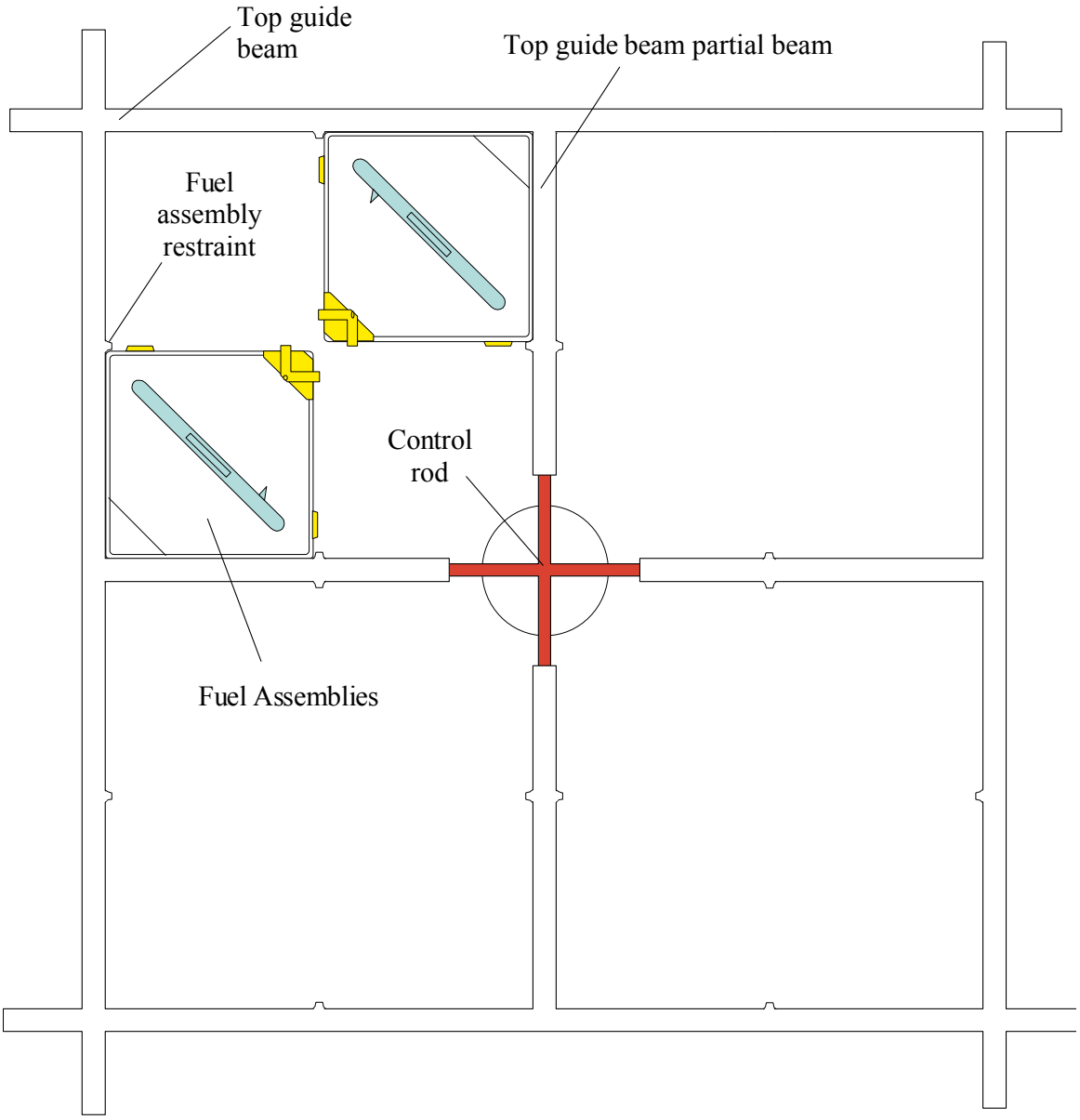

Figure 2.2-4 Top Guide Lateral Support for Fuel

[[

{3}]]

Figure 2.2-5 ESBWR Control Rod

2.2.5 Core Nuclear Design

The current reference core uses the GE12 fuel design as described in Section 2.1.1. As new fuel designs evolve they will be adapted to the ESBWR configuration if significant benefits exist.

The current reference core has been analyzed to the functional requirement specified in Table 2.2-1.

Table 2.2-1 ESBWR Fuel Functional Design Specification

Core Thermal Power, MWt	4000
Plant Electric Power Rating, MWe	1380-1400 (dependingon site)
Active Fuel Height, meters	3.048
Power Density, KW/liter	54
Core Size, bundles	1020
Number of Control Rods	121
Core Configuration	"F" Lattice
Reactor Pressure, Mpa	7.171
Core Flow, 10^6 Kg/hr	42.6
Outage Days	10
Overall Availability Factor	92%
Fuel Type	GE12

2.2.5.1 GE12 Fuel Assembly Design Description

The fuel design is based on the advanced GE12 fuel, which is licensed and has been in proven commercial operation since 1991. The design employs a 10x10 fuel geometry which decreases the average fuel rod linear heat generation rate over the 8x8 or 9x9 design. The lower linear heat generation rate allows for a reduction of the average fuel temperature and fission gas release and lowers the average heat flux.

The 10x10 fuel geometry consists of a fuel rod array of 92 fuel rods and two large central water rods (Figure 2.2-6). Fourteen of the fuel rods are part-length rods spanning the lower two-thirds of the active fuel length. These part-length rods provide increased flow area in the high steam voids region for reduced pressure drop. The GE12 also incorporates high performance ferrule spacers and high flow upper tie plate to further reduce pressure drop. The high performance spacers in conjunction with an interactive channel design improve the critical power margin.

[[

{3}]]

Figure 2.2-5 GE 12 Fuel Assembly Configuration

2.2.5.2 Core Thermal and Reactivity Limits Design Criteria

[[

{3}]]

2.2.5.3 Conclusion

An F lattice ESBWR core has been designed to operate on a 12-month equilibrium cycle as a reference. All safety-related reactivity and thermal limits design criteria are satisfied, and the void, power, and Doppler reactivity coefficients are all negative.

2.3 Natural Circulation Design Recirculation Flow

Natural circulation in the ESBWR is established due to the density differences between the water in the vessel annulus (outside the shroud and chimney) and the steam/water mixture inside the shroud and chimney. The colder, higher density water in the annulus creates a higher pressure or a driving head when compared to the hotter, lower density fluid (steam/water) in the core and chimney. It's the energy produced in the core of the reactor which heats and begins to convert the water entering at the bottom of the core, to a steam/water mixture. In the core the subcooled water is first heated to the saturation temperature and then additional heat is added, starting the boiling process of the core coolant. As the coolant travels upward through the core the percent of saturated steam increases until at the exit of the core the percent of saturated steam is about 18 weight % (18% quality). 18% quality means there is 18 weight % steam and 82 weight % water, mixed at the corresponding saturation temperature. This low density steam/water mixture travels upward through the chimney to the steam separators where centrifugal force separates the steam from the water. The separated, saturated water returns to the volume around the separators while the slightly "wet" steam travels upward to the steam dryers and eventually out the main steam nozzle and piping to the turbine.

Cooler feedwater re-enters the vessel at the top of the annulus, to mix with the saturated water around the separators and subcool this water. The resulting mixture is subcooled only a few degrees below the saturation temperature. The cooler mixture then travels downward through the annulus to re-enter the core. The water therefore forms a recirculation loop within the vessel. The mass of steam leaving the vessel is matched by the mass of feedwater entering.

The chimney adds height to this density difference, in effect providing additional driving head to the circulation process. A forced circulation BWR acts in the same basic manner but uses the internal or external pumps to add driving head to this recirculation flow instead of the elevation head provided by the chimney. A pump has entrance and exit losses associated with it and the pump must over come these losses as well as produce the driving head to overcome these losses.

Figure 2.3-1 illustrates the natural circulation process for the ESBWR.

The ESBWR has evolved from the original SBWR design while maintaining the natural circulation driven recirculating core flow. Earlier BWR plants such as Humboldt Bay and Dodewaard used natural circulation rather than forced circulation provided by external or even internal pumps.

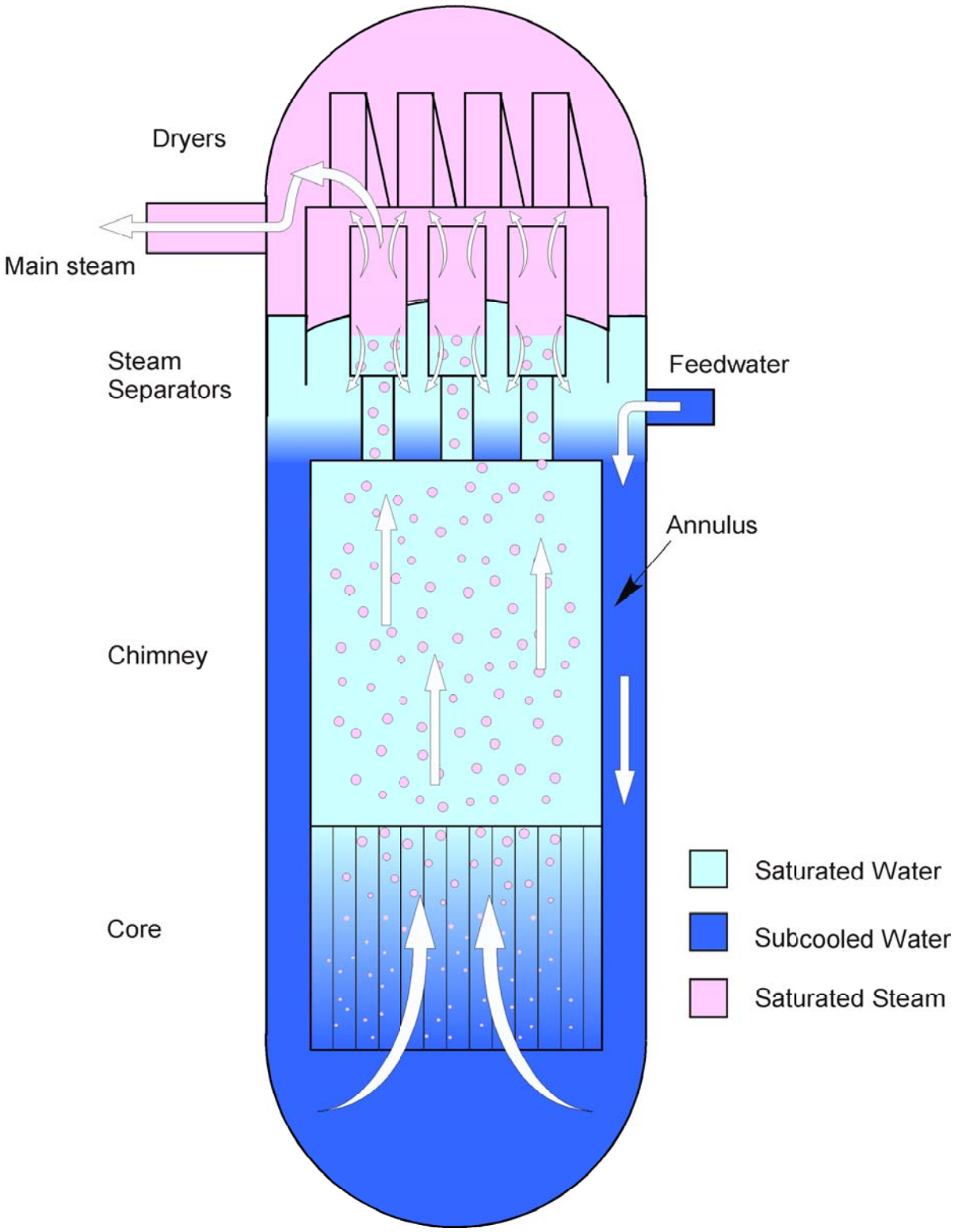

Figure 2.3-1 Natural Circulation Recirculation for the ESBWR

2.3.1 Sizing of Chimney Height for Design Recirculation Flow

The ESBWR design is similar to that of the operating BWRs, except that the recirculation pumps and associated piping are eliminated. Circulation of the reactor coolant through the ESBWR core is unaided natural circulation. The natural circulation flow rate is dependent upon the difference in water density between the downcomer region and the core region. The chimney and partitions assembly (see Section 2.4.3.2 for detail description) is installed above the core to provide the required core flow rate. The core flow varies according to the power level as the water density changes. Therefore, a core power-flow map is only a single line, and there is no active control of the core flow at a given operating power.

Chimney Height: The effective height in the core region consists of the chimney height and the length of the separator assembly including the standpipe. This effective height determines the natural circulation flow driving force, and the overall height of the reactor pressure vessel (RPV). Sensitivity studies were performed to investigate the effect of chimney height on the core flow for a given design of separator assembly. Results of these studies show that the core flow increases linearly with the chimney height. The core flow increases about 4% for each meter increase in the chimney height. The chimney height is 8.61 meters.

Partition dimensions: The partitions provide upwardly-directed distinct flow channels for the two-phase mixture exiting from the core and augment the core flow. Typically, there is a radial void fraction distribution for the two-phase mixture at the core exit, higher in the central region and lower in the peripheral region, corresponding to the core radial power distribution. Without the partitions, recirculation and cross flows may develop inside the chimney due to this radial void fraction distribution. These recirculation and cross flows could cause higher axial pressure drop along the chimney and correspondingly lower core flow.

The mixing plenum (see Figure 2.4.3-3), between the top of the partitions and the bottom of the separator standpipes, corresponds to the upper plenum in the operating BWR plants. The height of the dome-shaped upper plenum in the operating BWR plants changes from about 2 meters at the peripheral edge to about 2.5 meters at the center. Operating plant data and tests show that the separator performance is within the design specifications for this range of upper plenum height. For the ESBWR, the height of the mixing plenum (flat top and bottom) is designed at 2 meters, which is within the design range of the operating BWR plant. The height of the partitions is the difference between the chimney and the mixing plenum, or 6.61 meters.

The chimney partitions are configured as square spacing with 4X4 or 16 fuel bundles in each partitioned section. Exceptions can be noted near the periphery where some sections consist of less than 16 bundles. Figure 2.3-2 shows the configuration for the ESBWR. A large pipe void fraction test was conducted at Ontario Hydro. It showed a relatively flat void profile across the 0.51 m (20”) pipe channel. The partitions designed for the ESBWR chimney will help to prevent flow eddies and unexpected pressure drop.

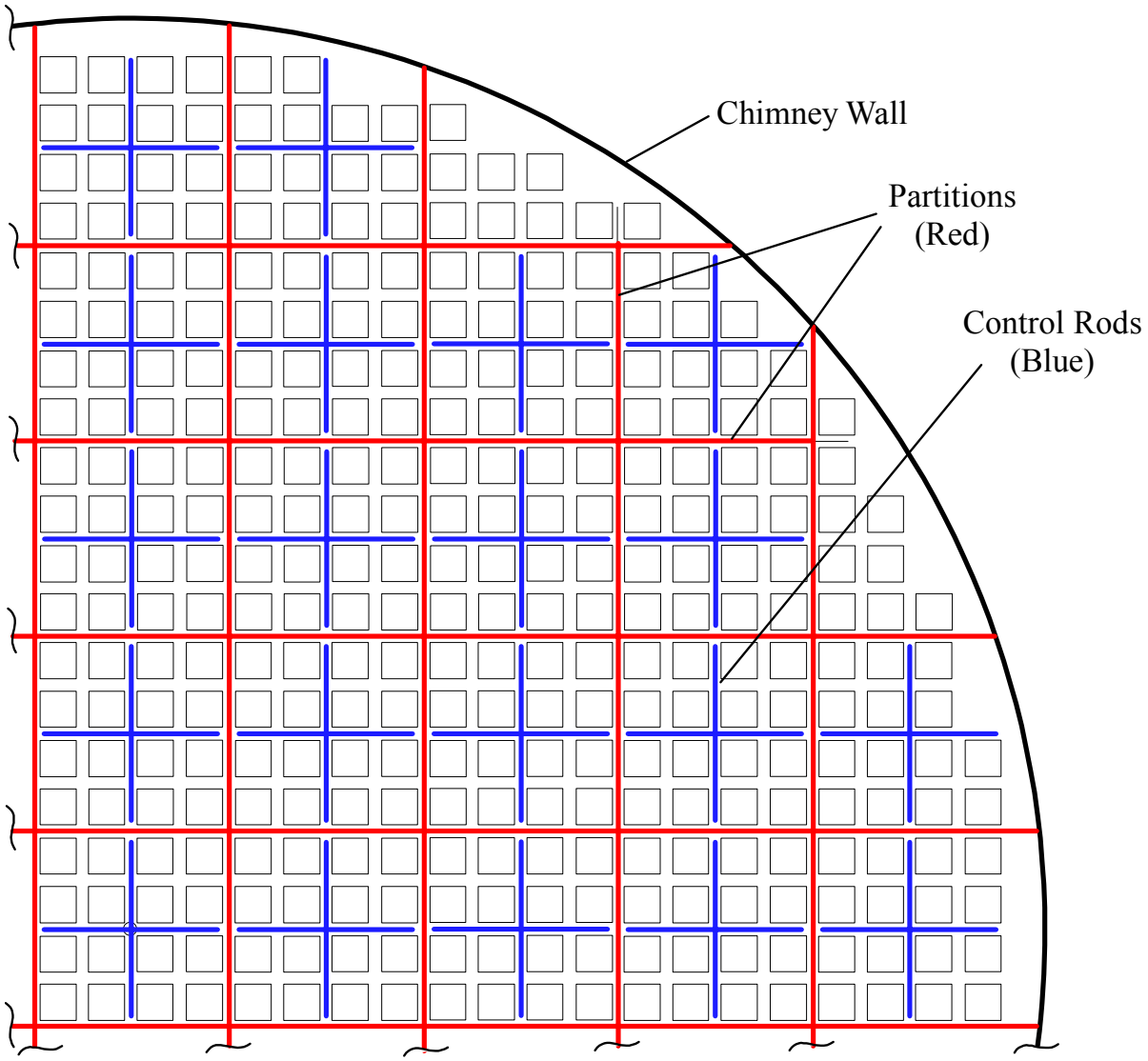

Figure 2.3-2 ESBWR 4X4 Chimney Partitions

1/4 Cross Section

2.4 Reactor System - Internal Components

2.4.1 Summary Description

The reactor assembly consists of the reactor pressure vessel along with its pressure-containing attachments including control rod drive (CRD) housings and in-core instrumentation housings, plus the reactor assembly internal components, described in the paragraphs below. Figure 2.4-1 (ESBWR Reactor Key Features) shows the arrangement of these components in the ESBWR reactor assembly.

A reference fuel and control rod design and core loading pattern established for the ESBWR F lattice core with its shorter fuel and larger control rod, is used as the basis for this plant's system response studies. The actual fuel and control rod designs and core loading pattern to be used at a plant are required to meet criteria approved by the licensing body of the country where the plant will be built. ESBWR's reference fuel and control rod design is described in Section 2.2 of this report.

2.4.2 Reactor System

The **Reactor System** for ESBWR is comprised principally of:

- a reactor pressure vessel (RPV), together with certain components that become classified as "reactor vessel components";
- a set of reactor assembly internals, largely characterized as components within the RPV and which can be removed, or replaced, or at least readily repaired should the need arise;
- reactor coolant, which of course is the working fluid enabling the reactor to produce steam for the plant turbine-generator.

The hardware components of the Reactor System arrange the flow path for the recirculation core flow and for leading separated steam to the main steamlines (refer to Figure 2.3-1 and also Figure 2.4-2). The recirculation flow moves downward, outside the core shroud and is discharged into the vessel lower plenum formed by the RPV bottom head and the lower portion of the shroud and shroud support. The flow then moves across and turns upward between the control rod guide tubes, entering into the bottom entry venturi on the fuel supports and then into the fuel assemblies. Venturiis in the fuel supports act collectively on the recirculation flow that has been divided into individual (i.e., fuel assembly) flow paths. The venturi restrictions provide single-phase pressure drop sufficient to establish stable flow within every fuel assembly.

Fuel assemblies are supported by the fuel supports attached directly to the core plate. The dead load from the fuel assemblies plus the respective fuel support is supported by the core plate. Most flow is prevented from directly bypassing the fuel via a close-fit engagement of the fuel lower tie plate with the fuel support. A small fraction of the in-bundle flow is discharged outwardly from holes in the fuel lower tie plate to supplement flow moving up between adjacent fuel assemblies and thus prevent boiling (and loss of moderation) in the inter-channel spaces. Bypass flow in a natural-circulation reactor results in nominally 10-13% of the total core flow.

But the vast bulk of the recirculation flow (87-90%) continues flowing alongside the fuel rods within the fuel channels, where boiling occurs.

A two-phase steam-water mixture is discharged from the top of the core, then travels upward through the partitioned chimney region atop the core. The two-phase mixture enters the mixing plenum at the top of the chimney partitions, just prior to entering the steam separators. The steam-water mixture then flows through individual standpipes to the steam separators. The passive steam separators are fixed-swirler-vane axial flow centrifugal separators. Wet steam discharged from the top outlets of the separators then flows through banks of chevron dryers. Steam with no more than 0.1% moisture is discharged from the dryers into the RPV steam dome and, in turn, out through the RPV's four main steam outlet nozzles. These forged steam outlet nozzles each contain a flow restricting venturi section that serves to limit (by choking) the pipeline flow rate in the event of a downstream main steam line break. These venturiis are also used for measurement of main steam flow during power operation.

Saturated water discharged from the separators is directed downward, in a submerged annular jet, from the cylindrical outer skirt (or "barrel") of each separator. This discharge flow carries into the spaces between the standpipes, forming a pool ("standpipe pool") that surrounds the separator standpipes and stands atop the chimney head. RPV normal reactor water level is maintained midway up the barrel of the separators, being controlled within a band-range of typically 23 cm (9 in.), being the range from Level 4 at the bottom end of this band and Level 7 at the top end with Level 7 being set typically 1.0 m above the separator skirt end. This below-surface liquid discharge prevents re-entrainment of steam as the water is discharged from the separators.

The dryer assembly is comprised of six in-parallel banks of chevron-type dryers. A thin-plate skirt member extends below these banks which, similar to the separator barrels, extends below the RPV normal operating water level, thus surrounding also all the steam separators, and thus forming a water seal and preventing steam discharged from the separators from bypassing the dryers.

Water discharged into the standpipe pool from the separators, flows downward and then outward between the separator standpipes. Water from the dryer drain-trays, and the feedwater which is distributed through feedwater spargers mounted on the RPV inner wall, mix with recirculation water discharged from the separators. The combined flow passes down the annulus formed by the RPV shell as the outer boundary and the chimney and core shroud as the inner boundary.

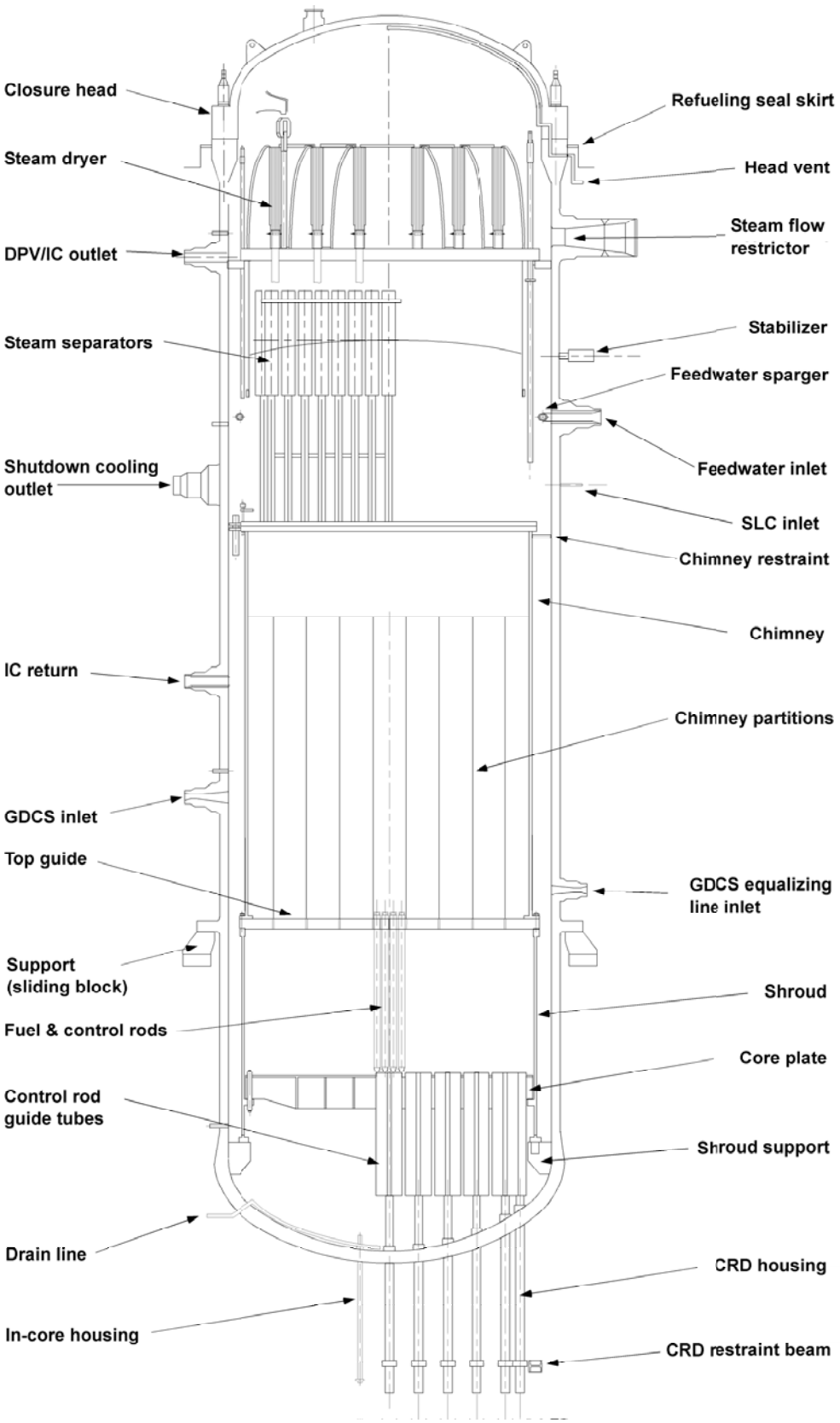

Figure 2.4-1 ESBWR Reactor Key Features

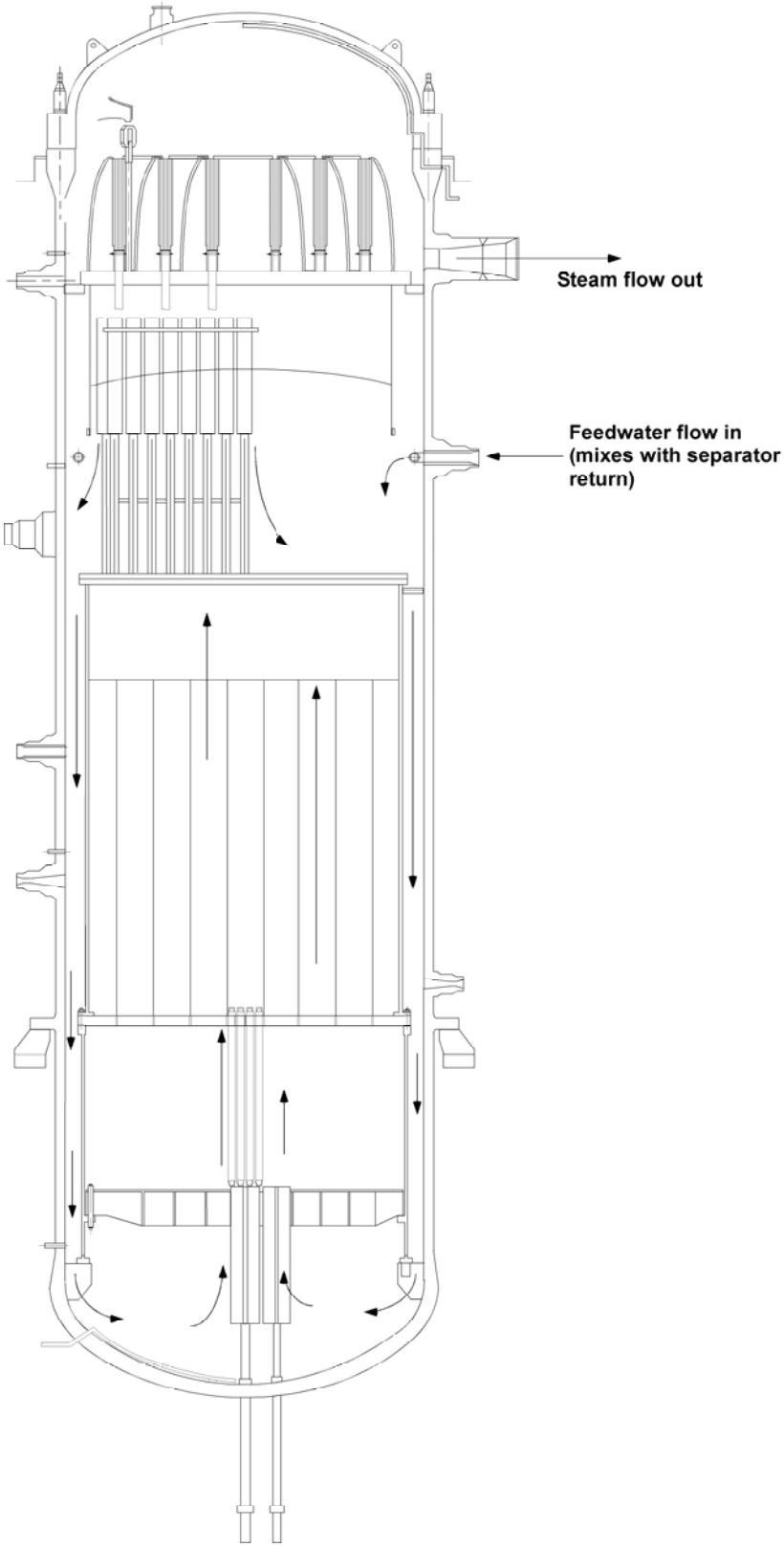

Figure 2.4-2 Recirculation Flow

2.4.3 Reactor Pressure Vessel Internal Components

The ESBWR RPV design and description will be covered in detail in the next section (Section 2.5 of this report); below, we briefly clarify the standing of certain Reactor System components as to whether they are classified as **reactor assembly internals** (the subject of this Section 2.4) or **reactor vessel parts** (the subject of next Section 2.5). Generally speaking, the former are stainless steel components; the latter tend to be carbon steel parts or are stainless parts shop-welded into the RPV prior to shipment.

The ESBWR RPV is designed to feature essentially fully replaceable reactor internals. Many of these "replaceable" components are, in fact, "removable", as done during refueling outages. Generally, more complex servicing procedures would be connected with undertaking the changeout of those additional components of the reactor assembly internals that are termed as "replaceable".

(In a few special cases--for example, the CRD stub tube nozzles in the RPV bottom head, and the shroud support brackets--these reactor assembly internals are even more correctly termed "fully repairable" vis-à-vis "fully removable"; however, these exceptions are very few, and have been carefully considered, to reach a best-balanced design result.)

Assigned to the RPV (Section 2.5) are the flow restrictors that are included in both the main steam outlet nozzles as well as in the GDCS injection line and equalizing line nozzles.

Except for the Zircaloy in the reactor core, these reactor internals are manufactured from stress corrosion-resistant stainless steels or other high alloy steels.

The core support structures and reactor vessel internals (exclusive of fuel, control rods, and in-core nuclear instrumentation) are as follows:

- Core Support Structures
    - shroud;
    - shroud support;
    - core plate (and core plate hardware);
    - top guide;
    - fuel support(s); and
    - peripheral fuel supports
- Reactor Internals
    - chimney and partitions assembly;

- chimney head and steam separator assembly;
- dryer assembly;
- feedwater sparger(s);
- SLC header and sparger(s) and piping;
- RPV vent assembly;
- control rod drive housings;
- control rod guide tubes;
- in-core guide tubes and stabilizers;
- surveillance sample holder assemblies; and
- RWCU/SDCS bottom-drain entrance line(s).

A general assembly drawing of the important reactor components is shown in Figure 2.4-1

The design arrangement of the reactor internals, such as the shroud, chimney, steam separators and guide tubes, is such that one end is unrestricted and thus free to expand in response to temperature changes between startup and power operation conditions.

2.4.3.1 Core Support Structures

Core support structures consist of those items listed above; all such components are safety-related. The ASME Code definition for "core support structures" is:

"Core support structures are those structures or parts of structures which are designed to provide direct support or restraint of the core (fuel assemblies)"

These structures form variously-shaped partitions within the reactor vessel to sustain operating pressure differentials across these partitions, direct the recirculation flow, and laterally locate and support the fuel assemblies. Figure 2.4-2 shows the Reactor System internal flow paths.

Because of the different configuration of the F lattice core adopted for the ESBWR, some of the core support components have been redesigned from typical, past BWR design.

Shroud: The **shroud support**, **shroud**, and **chimney** make up a stainless steel cylindrical assembly that provides a partition to separate the upward flow of coolant through the core from the downward recirculation flow. This partition separates the core region from the downcomer annulus. Three regions characterize the volume enclosed by this assembly:

- The upper region or chimney surrounds the core discharge plenum, which is bounded by the chimney head on top and the top guide plate below.

- The central region of the shroud surrounds the active fuel. This section is bounded at the top by the top guide plate and at the bottom by the core plate.

- The lower region, surrounding part of the lower plenum, is (repairable) welded to the RPV shroud support brackets.

The **shroud** provides the horizontal and vertical support for the core by supporting the core plate and also the top guide. The shroud is a one-piece stainless steel cylinder of 50 mm wall thickness with a nominal ID of 6014 mm, fabricated from two ring forgings. This construction eliminates many of the longitudinal and circumferential welds which have in some cases caused problems with older BWR shrouds. The shroud, at installation, weighs approximately 50 metric tons. The shroud top flange supports the top guide and allows the top guide to be bolted in place. The chimney lower flange in turn is bolted to the top guide. The chimney partitions are bolted to the chimney lower flange.

Shroud Support: The RPV **shroud support** is designed to support the shroud and the components connected to the shroud. The RPV shroud support is comprised of a series of thick, vertical brackets welded to the vessel wall near the bottom inside region of the RPV cylindrical portion and which project inward approximately 0.5 m toward the RPV centerline. Besides the weight of the shroud, these brackets support the weights of the chimney head and steam separators assembly, the chimney and partitions assembly, the core plate, the top guide and the fuel and fuel supports--all of these dead loads are carried onto these shroud support brackets via the shroud. More details on the shroud supports are given in Section 2.5.3 of this report.

Core Plate: The **core plate** consists of a welded assembly comprised of a circular stainless steel plate approximately 50 mm thick and with round openings to accommodate the fuel supports and with cruciform shaped openings to accommodate the control rod guide tubes. The core plate is stiffened underneath with a rim and beam structure. The core plate provides horizontal support and guidance for the control rod guide tubes and the in-core flux monitor guide tubes and vertical support for the fuel supports and fuel assemblies plus the startup neutron sources. As a special case condition, it also provides vertical support to the control rod guide tube and control blade, control rod drive (CRD), and CRD housing in the event of a failure of the CRD housing-to-stub tube weld. The entire assembly, which weighs approximately 22 t, is bolted to a support ledge or flange in the lower region of the shroud.

Top Guide: The **top guide** consists of a rectangular grid machined from a solid circular plate. Each central opening provides lateral support and guidance for sixteen fuel assemblies or, in the case of peripheral fuel, from one to fifteen assemblies. The central opening for lateral support of the fuel contains partial beams, which allow the large control rod to be rotated and removed from its position. Figure 2.4-3 shows the top view of the top guide with the various openings. Figure 2.4-4 shows a partial view of the top guide, which supports one cell or 16 fuel assemblies. The partial beam and assembly restraint is represented in this figure, with the

assembly restraint used to support individual fuel bundles or assemblies when an adjacent assembly is removed.

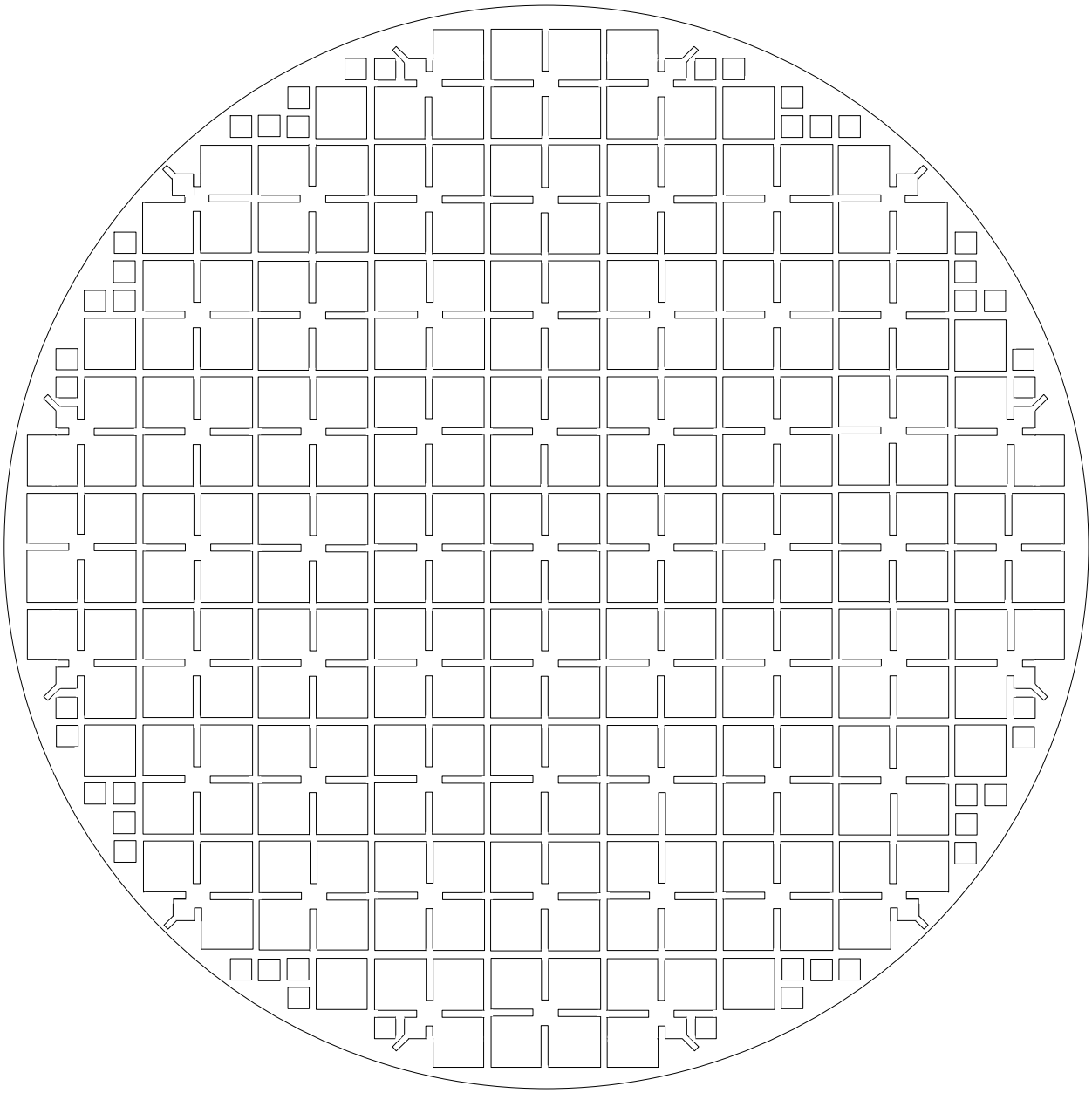

Fuel Bundles	**1020**
Control Rods	**121**

Figure 2.4-3 Top Guide Top View for the ESBWR (F Lattice Core)

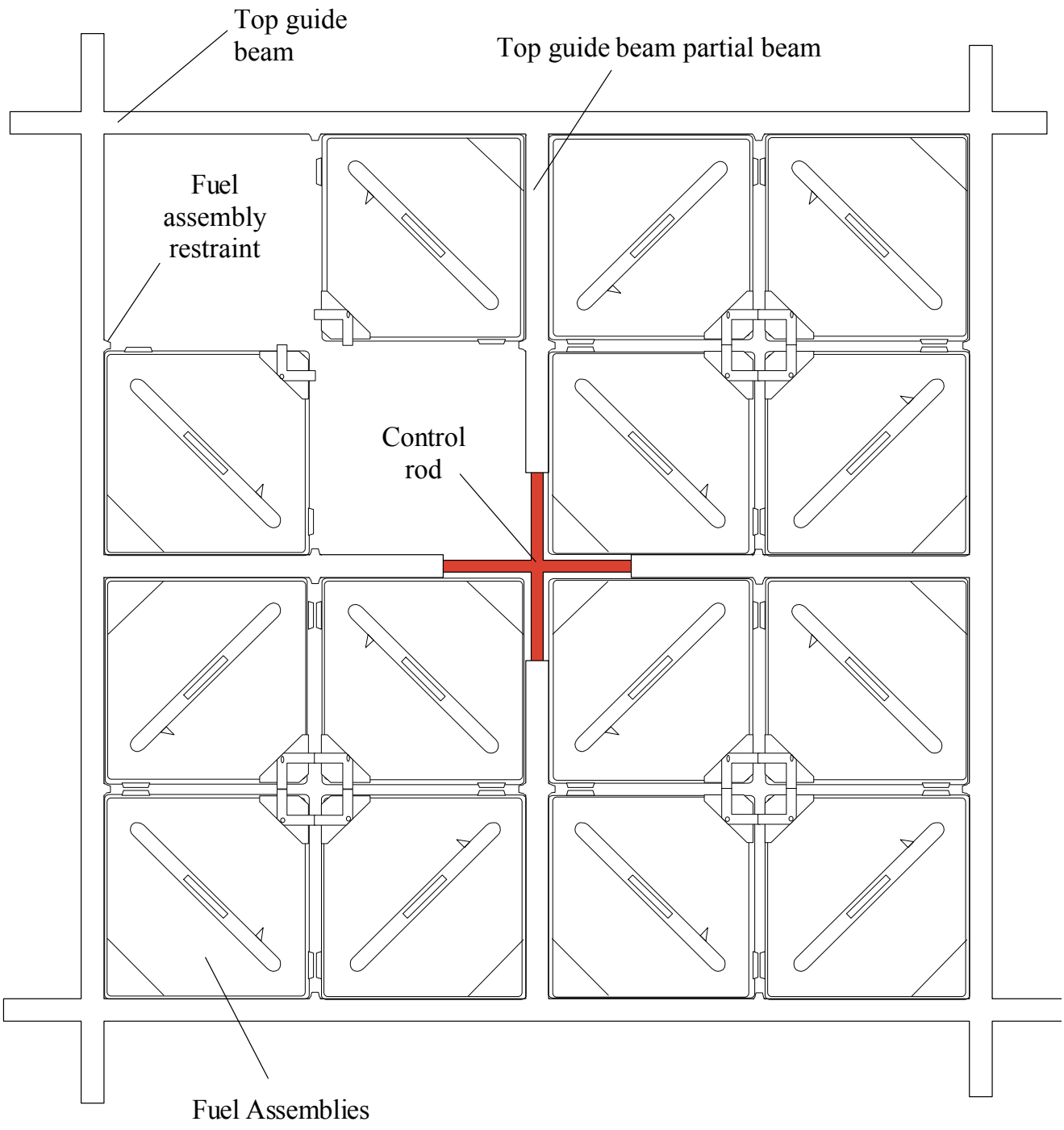

Figure 2.4.4 Partial Section of Top Guide (F Lattice Core)

Holes are provided in the bottom of the support or beam intersections to anchor the in-core flux monitors and startup neutron sources.

The top guide, which weighs approximately 23 t, is bolted to the top of the shroud and provides a flat surface for the chimney flange. During reactor internals assembly, the chimney will be bolted to the top surface of the top guide.

Peripheral Fuel Supports: Peripheral fuel supports are located at the outer edge of the active core and are not adjacent to control rods. Each peripheral fuel support provides the vertical and lower end horizontal support for one fuel assembly and contains a flow orifice designed to assure proper coolant flow to each peripheral fuel assembly.

Fuel Supports: The fuel supports are somewhat unique because of the F lattice configuration. The core plate directly supports the weight of the fuel and transfers this vertical load to the shroud and then to the vessel wall via the shroud support brackets. In order for the core plate to support this load, structural support beams are located directly underneath the 50 mm thick top plate. These beams must be located to allow the large cruciform shaped control rod guide tubes to penetrate the top plate. Figure 2.4-5 shows a partial section view of the core plate showing the guide tube openings and the suggested openings for the fuel supports. With this suggested configuration approximately one-half of the holes for the fuel supports are directly above the support beams creating a flow split situation. This flow split is undesirable from the standpoint of possible flow separation and unexpected pressure losses. Figure 2.4-6 shows what the flow inlet configuration would look like with the support beam directly underneath.

In order to remedy this split flow situation, an offset fuel support was designed which would allow the flow for each fuel assembly to enter just to the side of the support beams. The advantage of this design is to make all entrance conditions the same and eliminate the split flow – flow separation condition. Figures 2.4-7 and 2.4-8 show this new configuration.

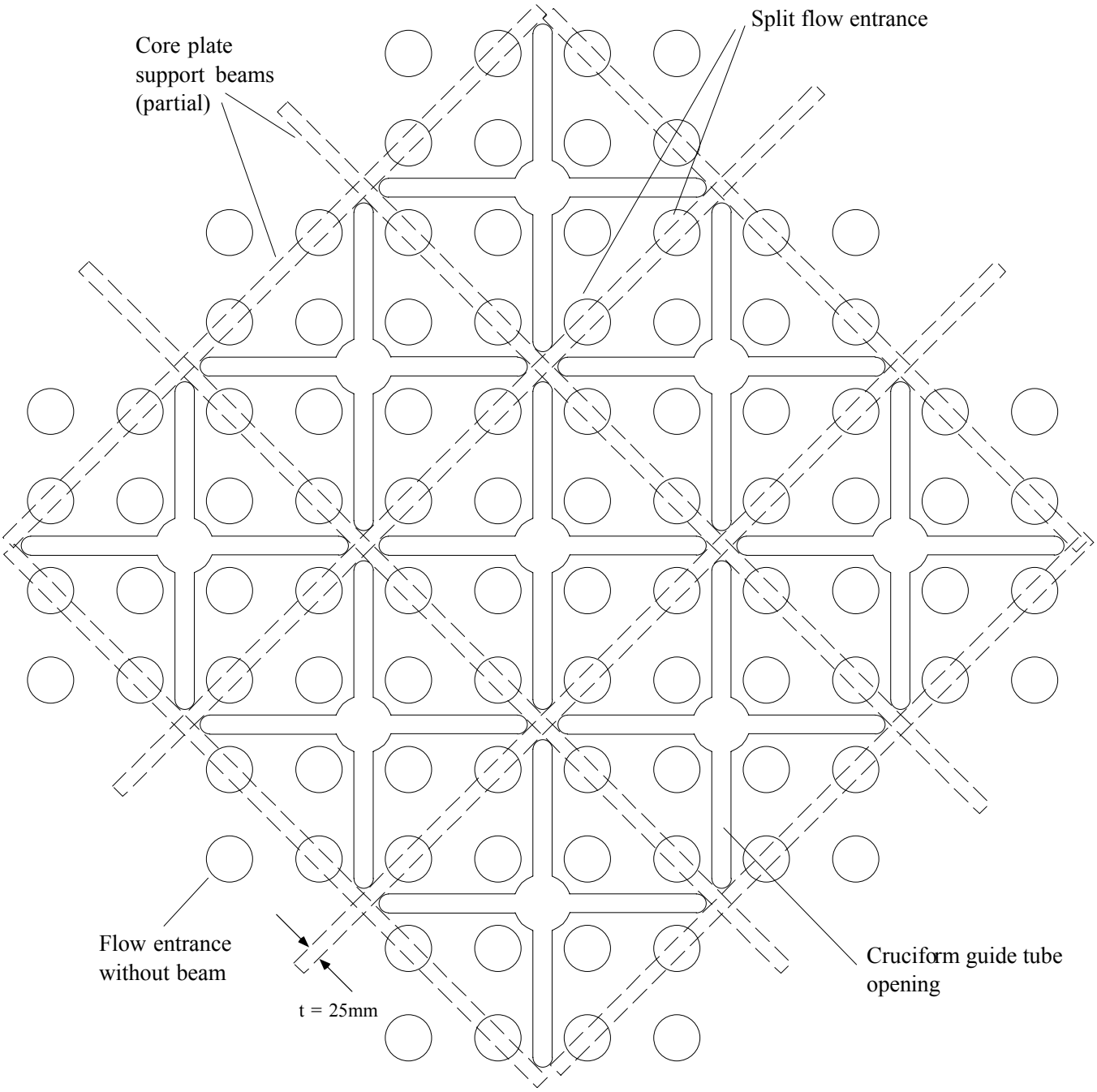

Figure 2.4-5 Top View Section of Core Plate (F Lattice Core)

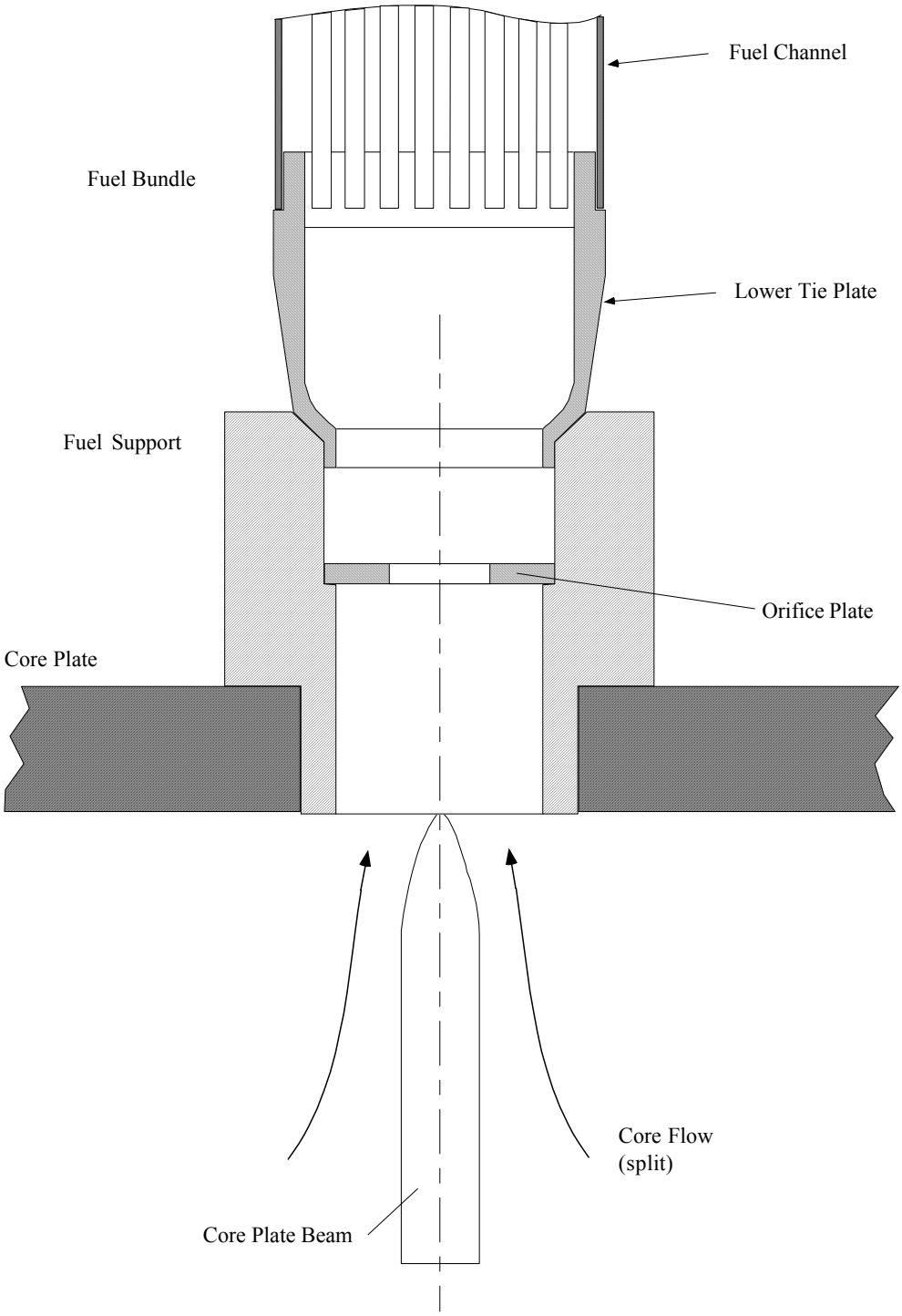

Figure 2.4-6 Possible Split Flow Configuration

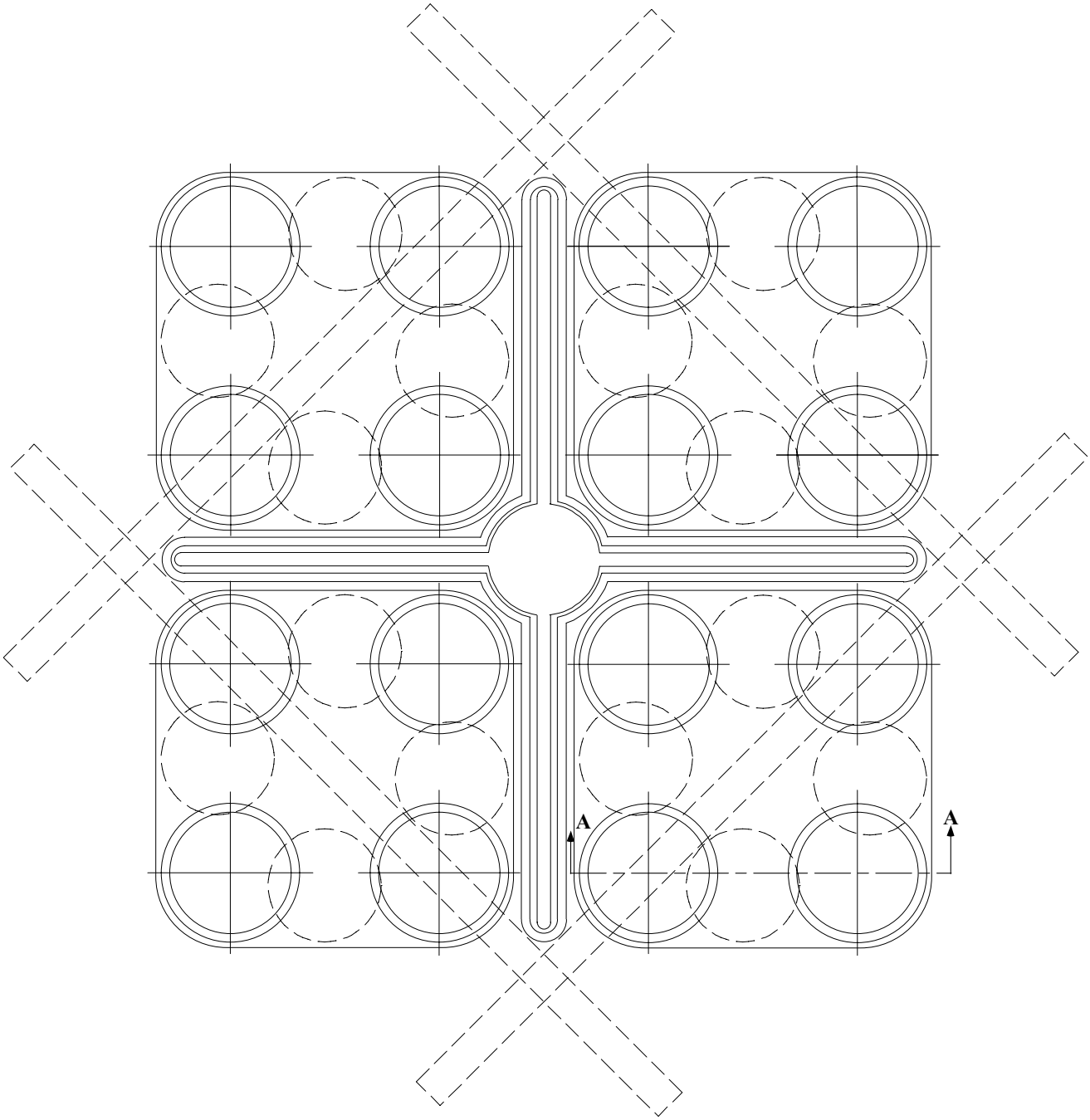

Figure 2.4-7 Offset Fuel Support (F Lattice Core)

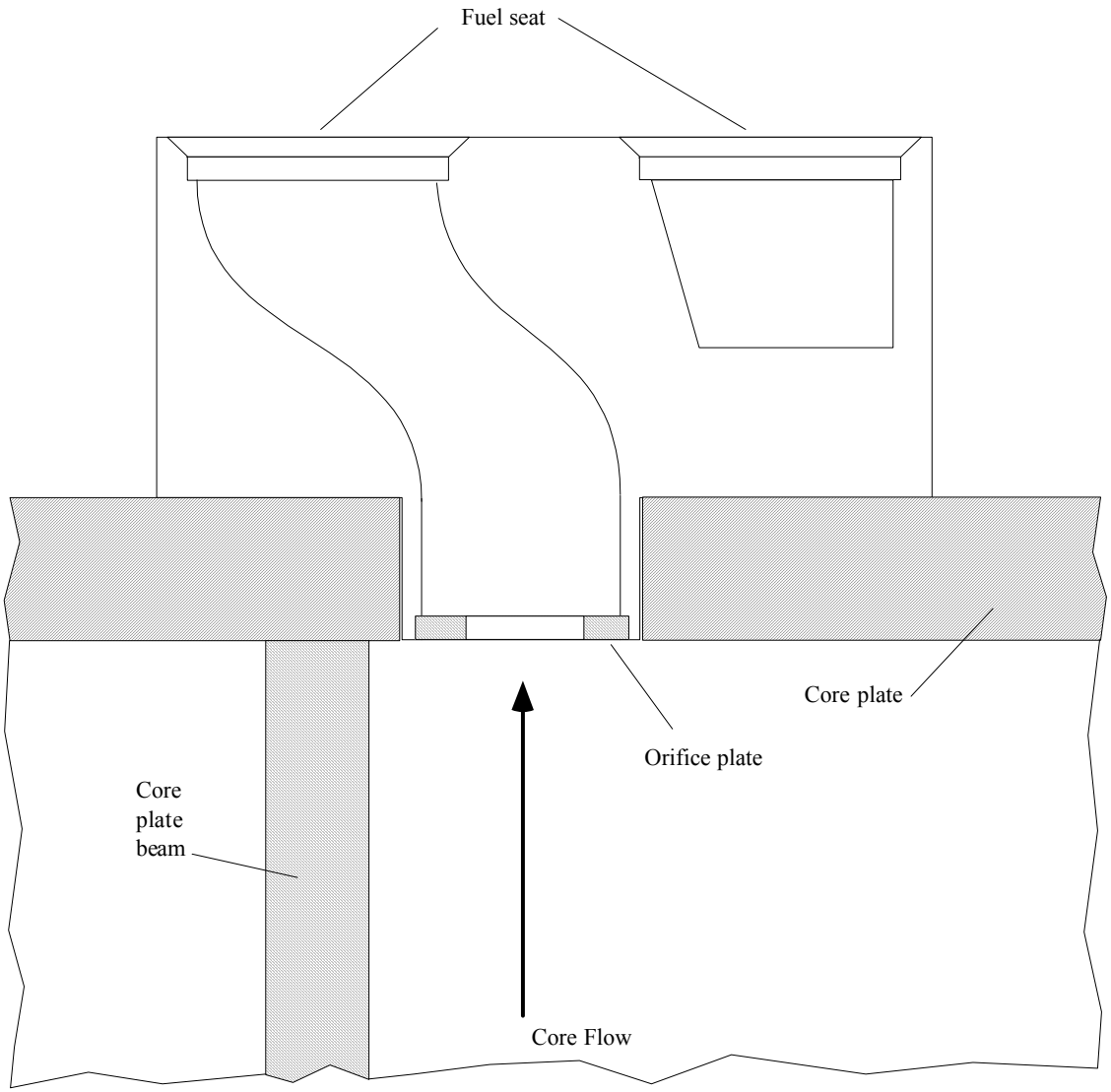

Figure 2.4-8 Offset Fuel Support - Cross Section A - A

2.4.3.2 Reactor Internals

The reactor internals consist of those items listed in Subsection 2.4.3; these are safety-related or non-safety-related as noted below. These components direct and control coolant flow through the core or they support safety-related and non-safety-related functions.

Chimney and Partitions Assembly: The chimney and partitions assembly is comprised of a flanged, open-ended, stainless steel cylinder approximately 5819 mm nominal internal diameter and 8.61m long, made of rolled and welded plate approximately 50 mm (2.0 in.) thick, and inside of which is bolted a box-array comprised of relatively-thin, vertically-oriented partition-plates which provide upwardly-directed distinct flow channels to two-phase coolant exiting from the core. The chimney and partitions assembly is positioned at the flow-outlet side of the core, being bolted to the top guide during initial reactor assembly. The cylindrical shell of the chimney and partitions assembly is termed the chimney, and the partition-plates are termed the partitions. The chimney thus forms the inboard boundary of the downcomer annulus. Within the downcomer annulus, subcooled recirculation flow developed from the mixture of saturated liquid extracted by the steam separators plus highly-subcooled feedwater moves downward, while inside the chimney steam-water mixture flow rises above the core. The chimney thus adds vertical length to this upward flow path for two-phase (steam-water) coolant leaving the core, and to the downward flow path for single-phase (liquid) recirculation flow returning to the core lower plenum. Via this path length addition, the chimney augments the driving head sustaining natural circulation flow, significantly increasing the flow rate through the core's fuel assemblies (refer to Section 2.3).

The chimney also structurally supports the chimney head and steam separator assembly. The chimney is flanged at its bottom for attachment to the top guide, and at its top for attachment of the chimney head. Inside the chimney are 9 mm (0.35 in.) thick replaceable (bolted) stainless steel partitions, which divide the core into groups of 16 fuel assemblies in regular 4 x 4 bundle arrays. The height of the partition is 6.61 m. These partitions act to channel the mixed steam and water flow exiting the core into smaller chimney sections, thus limiting cross flow and flow instabilities which could result from a much larger diameter open chimney. The partitions, which remain in place during refueling operations, extend from the elevation of the chimney bottom flange to, approximately, 2 m below the chimney top flange, thereby forming at this top section a short plenum or mixing chamber for the steam/water mixture just prior to the flow entrances into the steam separator standpipes. Figure 2.4-9 illustrates the ESBWR chimney and partition arrangement.

These components are non-safety-related internal components. The chimney and partitions assembly weighs approximately 80 t.

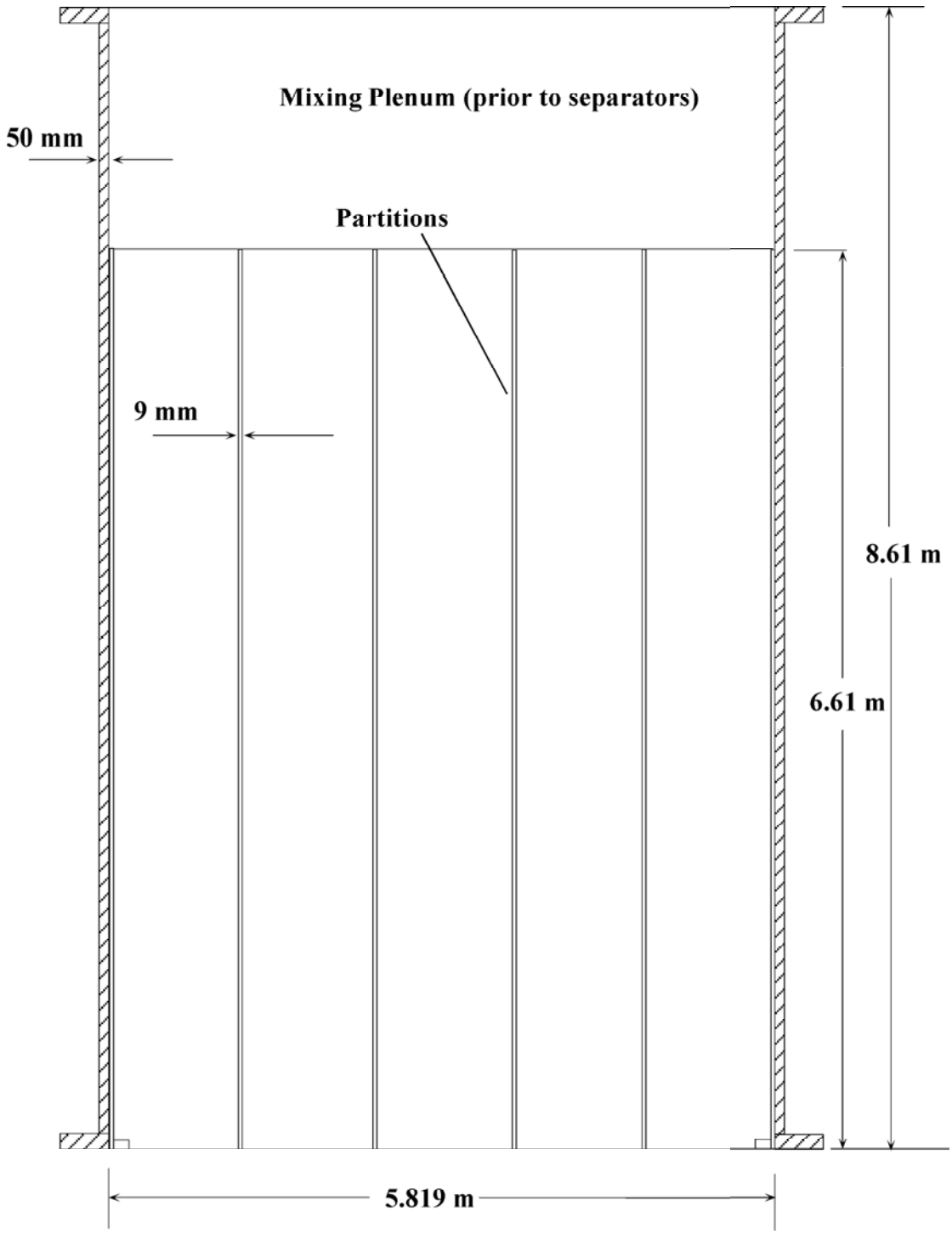

Figure 2.4-9 ESBWR Chimney and Partitions Assembly

Chimney Head and Steam Separators Assembly: The **Chimney Head and Steam Separators Assembly** is comprised principally of a chimney head, on which are mounted a multiplicity of standpipes/steam separators and which serves to complete the enclosure of the core outlet plenum and chimney region and to direct the two-phase core outlet flow in to steam separators for processing. The chimney head is a circular flat stainless steel plate approximately 102 mm thick, and which is stiffened by a network of beams extending below the plate into the chimney region. The chimney head is fastened using quick-release T-bolts around its periphery to the chimney top flange. Standpipes welded into a close-spaced triangular-pitch array of openings in the chimney head in turn carry individual stainless steel fixed-vane axial flow steam separators. The standpipe inlet uses a rounded inlet geometry with a radius of curvature of 25 mm for minimizing the standpipe entrance pressure drop, thus helping to maximize core flow and increase reactor margins.

The passive type centrifugal steam separators mounted on top of the standpipes have no moving parts. The characteristics of the ESBWR steam separator are outlined in Table 2.4-1. The steam separator is a low pressure drop component optimized specially for ESBWR. The conventional separator triangular-pitch spacing has decreased, slightly, to 292 mm from 305 mm in SBWR. This increases the number of separators that can be mounted on the chimney head within the circumscribing diameter of a reactor component that must be removed from the RPV at each refueling outage, thus decreasing the separator mass flow rate loading and pressure loss. The number of separators used in ESBWR are 379 compared to 349 in ABWR which is rated at 3900 MWt.

The swirler design used in the ESBWR (and ABWR) steam separators is a type known as "AS2B", which represents a tested swirler-plus-separator top works combination optimized for the range of steam and liquid flow rates to be encountered during ESBWR power generation operations. In each separator, the steam/water mixture rising through the standpipe passes the swirler vanes that impart a spin to the flow and establish a spinning vortex--with steam in the center and water on the outside--separating the steam from the water due to the highly enhanced buoyancy forces developed on steam bubbles in the spinning water portion of the vortex, causing these bubbles rapidly to move into the steam phase region. Refer to Section 2.7 for further details.

The result of the low pressure drop ESBWR steam separator is about 20-percent core flow increase per bundle at rated conditions over SBWR.

Table 2.4-1 ESBWR Separator Configuration Summary

	ESBWR	SBWR	ABWR
Standpipe Inlet Geometry	25.4 mm radius of curvature	Welded Inlet, no curvature	12.7 mm radius of curvature
Separator Triangular Pitch Size	292 mm	305 mm	305 mm
Swirler Design	AS2B	AS2B	AS2B

Water separated out of the steam-water mixture that entered the steam separator passes through internal flow passages where it is turned downward to exit from the separator in an annular jet that discharges underwater into the pool surrounding the standpipes, and then flows outward and into the RPV downcomer annulus.

The **Chimney Head and Steam Separators Assembly** is a non-safety-related internal component, weighing approximately 76 t.

Dryer Assembly: The dryer assembly is tasked with removing moisture from the wet steam leaving the steam separators. The dryer assembly consists of multiple banks of dryer units mounted on a common structure that is removable from the RPV. The dryer assembly includes these dryer banks, dryer supply and discharge ducting, drain collecting troughs plus drain piping, and a surrounding thin-plate skirt member which by extending below the separator reference zero elevation thereby forms a water seal that prevents any steam from bypassing the dryers. The extracted moisture flows down the dryer vanes into collecting troughs spanning the bottom expanse of each individual dryer bank, then flows through tubes to exhaust underwater into the downcomer annulus.

The dryer assembly is supported by the dryer support blocks located on the vessel wall. The dryer support blocks or brackets, welded to the vessel wall control the downward and radial movements. The upward movement of the dryer assembly under the action of postulated blowdown and seismic loads, as well as by differential expansion growth of the dryer assembly with respect to the RPV, is controlled by the dryer assembly lifting rods, which are directly under the brackets in the RPV top head.

The dryer assembly is a non-safety-related component, weighing approximately 60 t.

Feedwater Spargers: Inside the drywell, near the RPV, each of ESBWR's two feedwater lines divides into three smaller-sized branches that ultimately run upward and then turn horizontal to connect to respective RPV feedwater nozzles positioned at uniform azimuthal spacing around the RPV. Inside the RPV are positioned stainless steel piping **spargers** each

configured in a winged-tee configuration, the base of which is fitted into the RPV nozzles through a welded thermal sleeve, while the spargers' wing-ends are pinned to brackets provided on the interior wall of the RPV. The wings are shaped to conform to the curve of the RPV wall. Along the topside of the wings of these spargers are mounted a multiplicity of short gooseneck-type nozzles that face inward toward the RPV centerline, allowing the cooler feedwater to jet and mix into the separator-standpipes pool of saturated coolant that stands just atop the chimney head. A typical sparger weighs approximately 0.3 t. These are classified as non-safety-related components.

SLCS (Standby Liquid Control System) Header and Sparger and Piping: In ESBWR, the Standby Liquid Control System is a two-division system, each with liquid poison accumulator and injection piping. The injection piping bringing sodium pentaborate solution from either of the two SLCS liquid poison accumulators connects to the RPV at about the elevation of the feedwater nozzles. Inside the RPV, divisional SLCS injection piping is routed from the RPV SLCS nozzle to a divisional SLC header (one for Division I, another for Division II) that runs horizontally part-way around the periphery of the core shroud. This header in turn supplies four smaller-sized downward-running standpipes that extend down approximately to the core plate elevation. At the bottommost sections of each of these standpipes, spanning an elevation zone representing the lower half of the core region, four equally-spaced nozzles are positioned that penetrate through the core shroud to distribute injected sodium pentaborate solution into this lower core bypass region once the SLCS System is activated. Additional description of how the SLCS System functions can be found in Section 3.4.

These SLCS injection system piping, headers, standpipes and nozzles are classified as safety-related components.

RPV Head Vent Assembly: The **RPV head vent assembly** passes steam and noncondensable gases from the reactor head to one of the NBS System's four main steamlines during startup and normal operation. During shutdown and filling for hydrotesting, steam and noncondensable gases may be vented to the drywell equipment sump while the connection to the steamline is blocked. When draining the RPV during shutdown, air flows into the RPV steam dome through the vent.

For ESBWR, the head vent pipeline is routed internally within the RPV, from its opening at the top of the RPV steam dome and following the curve of the RPV top head to an interior penetration at the RPV head flange. Penetrations are made in the RPV shell flange and the RPV head flange such that the RPV head vent line exits the RPV in the RPV shell, within the RPV shell flange. This configuration allows removal of the RPV head without disassembling the RPV head vent line. The RPV head vent line remains permanently attached to the RPV head. Refer to Figure 2.4-1 for details. This is classified as a non-safety-related component. Only the piping external to the vessel is considered part of the reactor coolant pressure boundary (RCPB), and the vent function is not a safety-related operation.

Control Rod Drive Housings: The **control rod drive (CRD) housings** are inserted through CRD penetrations in the RPV bottom head and will be field-welded into forged stub tubes. These CRD housings will be fabricated of Type-316L austenitic stainless steel and

designed in accordance with ASME Section III, Subsection NB and NG (or equivalents), as applicable. The CRD housings are classified as safety-related components.

Control Rod Guide Tubes: For the ESBWR F lattice core design, the control rod guide tube (CRGT) is a cruciform-shaped section which extends through the RPV lower plenum from the top of the CRD housing up through the core plate. The guide tube is designed as the guide for the lower end of a control rod and acts to separate core flow from bypass flow. Figure 2.4-10 shows the cruciform shaped guide tube.

The bottom of the control rod guide tube section is supported by the top of the welded-in CRD housing. The lower end of the guide tube section base provides a bayonet connection to the Fine Motion Control Rod Drive (FMCRD) to restrain a hypothetical ejection of the FMCRD. The top of the guide tube is larger than the opening in the core plate and acts as a restraint, supporting the control rod, the drive and the control rod drive housing in the unlikely event of a weld break at the RPV stub tube. Refer to Section 3.2 for further detail of this ejection mitigation feature.

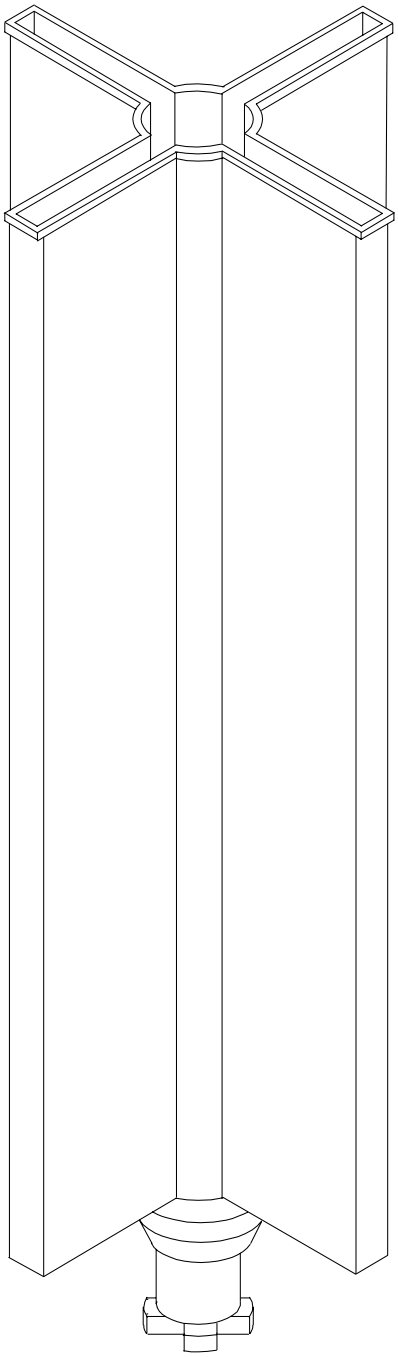

Figure 2.4-10 Cruciform Control Rod Guide Tube

In-Core Guide Tubes and Stabilizers: ESBWR is the first GE BWR to use a new type of fixed-in-place in-core sensor, used for calibrating the in-core LPRMs. This calibration system uses what is known as a gamma-thermometer (see description in Section 2.8). This design advancement allows elimination altogether of the moveable type of sensors known as TIP's, or Traveling In-Core Probe(s) used previously as calibration-type sensors to support the fixed-in-place (fission-chamber type) sensors, used for LPRM's. What remains are just two distinct types of in-core sensors --those known as Local Power Range Monitor assemblies or **LPRMs**, and those known as Source Range Neutron Monitor assemblies or **SRNMs**.

These LPRMs are comprised of four gamma-thermometer sensors assembled into a string (assembly) that is, in turn, enclosed within a stainless steel "wet-tube" tube sealed by a brazed closure. When positioned in place, the four gamma-thermometers each stand at a specified but different elevation within the core. The signal outputs from these sensors are fed into LPRM instrumentation for measuring local thermal flux levels, thus allowing a measurement of local power level. These LPRM assemblies (cover tube plus internally-carried sensors and cables) are guided in their run from the RPV bottom head up to the top of the core plate. The balance of their run upward through the core, which passes on the outside of the fuel channels at interstices not occupied by control blades, is supported by the fuel channels themselves. The very end of the in-core tube inserts upwardly into a hole at the beam-intersection points of the top guide, so that the in-core is supported laterally at its very tip.

The guide support directly given to this removable but fixed-in-place in-core sensor component (LPRM) below the core plate is termed **an in-core guide tube**. ESBWR's core is designed to have LPRM assemblies positioned across the core pattern array, and thus in-core guide tubes for these LPRMs. The guide tubes protect the LPRM from the cross-flows and turbulence of recirculation flow moving through the bottom head/core lower plenum region of the reactor. The in-core guide tube is a two-part welded stainless steel tube, the lower portion of which is called a **flux-monitor in-core housing** while the upper part is simply called the **in-core guide tube**. The flux-monitor in-core housing is a long tube extending both above and below the RPV bottom head and which passes through, and is welded into, a stub-nozzle within the RPV lower head. Inside the RPV bottom head/lower plenum region, the in-core guide tube is welded during reactor initial assembly to the flux-monitor in-core housing, thus forming an integral tube. The open-ended in-core guide tube is fixed into the core plate by simple slip-fit into a matching hole in the core plate. A spring-and-plunger assembly at the tip end of the LPRM secures the LPRM into the top guide hole. The LPRMs are both removed, and replaced, into their respective in-core guide tubes from the top, using special reactor servicing tools that enable this operation to be done safely and conveniently without any need to drain coolant levels in the RPV or reactor cavity.

The features of the SRNM assemblies and their flux-monitor in-core housings, in-core guide tubes, and top-end supports in the top guide are similar, but not identical, to those of the LPRMs. Principal differences are that the SRNM uses a single fission-chamber type detector, and this detector is housed within a **dry tube**. LPRMs cannot be interchanged with SRNMs in positioning these in-cores during reactor assembly. The dry tubes of the SRNM detector

assembly are, as with the LPRMs, removed and replaced from the top of the core. The detector elements of the SRNM detector assembly, however, can be withdrawn (and replaced) from below the core. ESBWR's core is designed to have SRNM strings positioned across its core pattern array, and so in addition to the flux-monitor in-core guide tube housings in the bottom head for the LPRMs, there will be another flux-monitor in-core guide tube housings for these SRNMs.

Two levels of stainless steel stabilizer latticework (**stabilizers**)--consisting of clamps, tie bars, and spacers--in the core lower plenum region give lateral support and rigidity to the in-core guide tubes. The in-core guide tubes and latticeworks are classified as safety-related components.

Surveillance Sample Holder Assemblies: A **surveillance sample holder assembly** consists of a stainless steel **bracket** welded to the inside of the RPV wall at core mid-plane, and a **specimen holder** in the form of a welded stainless steel, air-tight, helium-filled canister into which also are loaded RPV surveillance test specimens themselves, plus several wire flux monitors and also several temperature monitors. ESBWR has four such surveillance sample holder assemblies installed. The azimuthal positions for the brackets are chosen to expose the specimens to the same environment and maximum neutron fluxes experienced by the reactor vessel itself.

The specimen holder is inserted into its bracket, becoming fixed in place by a detent-type locking spring. Each specimen holder contains a minimum of 36 Charpy test specimens and six tensile test specimens, in addition to the wire flux monitors (for establishing cumulative irradiation dose) and temperature monitor specimens. RPV material specimens to be irradiated over various periods of reactor lifetime are taken from the RPV base metal, weld metal, and also the heat affected zone adjacent to RPV ring welds. The RPV manufacturer also provides a full set of test specimens that will serve as baseline references, but which will not undergo irradiation.

When a specified irradiation period is reached, the specimen holder is removed from the RPV and sent to a special hot test lab for processing. The bracket then can stay unoccupied over the remainder of RPV lifetime, or may be filled with a new set of specimens. These surveillance sample holder assemblies are non-safety related components.

RWCU/SDCS Bottom-Drain Entrance Line(s): ESBWR's RPV **bottom drain entrance lines** provide suction flow into the twin loops of the Reactor Water Cleanup/Shutdown Cooling System (RWCU/SDCS System). ESBWR needs this amount of coolant removal capability in order to overcome the otherwise "pooling" or stratification of cold water standing in the bottommost part of the core lower plenum during reactor startup. Recall, that with ESBWR being a natural circulation type reactor, there are no large recirculation pumps to operate during startup that, with other types of BWRs, used forced-recirculation flows to mix and sweep-out the cool stratified zone.

By operating both loops of the RWCU/SDCS System during startup, before boiling in the core causes significant natural circulation flow rates, core lower plenum stratification can be avoided. This will avoid the development of sudden changes in RPV wall temperature that

could produce high thermal stresses at the cold/hot stratification boundary, or that could prevent portions of RPV lower head material from attaining the necessary temperature levels to provide adequate margins above the material's nil ductility temperature condition.

ESBWR thus has four bottom drain entrance line nozzles (**drainline nozzles**), positioned approximately mid-height on the uppermost section of the dished RPV bottom head.

Stainless steel pipes, of 50A (2-inch) Schedule 80 size, shaped to follow the inside curve of the RPV lower head and attached to this inside bottom head via suitable brackets, lead from a position nearby the RPV low-point (at centerline) and run in a straight-path (i.e., in one plane, each, parallel to the RPV centerline) radially outward between the bosses of the CRD stub nozzles. These drain lines are sized to minimize the consequences of a postulated break of this line inside the lower drywell external to the RPV--where they are welded in place. These RPV internals (bottom drain entrance line pipes) are classified as non-safety related components.

2.4.4 Design Bases

2.4.4.1 Safety Design Bases

The reactor internals, including core support structures, shall meet the following safety design bases:

- The RPV nozzles and internals shall be so arranged as to provide a floodable volume in which the core can be adequately cooled in the event of a breach in the nuclear system process barrier external to the RPV.
- Deformation of internals shall be limited to assure that the control rods and the Gravity-Driven Cooling System can perform their safety-related functions.
- Mechanical design of applicable structures shall assure that the above safety design bases are satisfied so that the safe shutdown of the plant and removal of decay heat are not impaired.

2.4.4.2 Power Generation Design Bases

The reactor internals, including core support structures, shall be designed to the following power generation design bases:

- The internals shall provide the proper coolant distribution during all anticipated normal operating conditions to full power operation of the core without fuel damage.
- The reactor internals shall provide dry steam within the proper specifications to the turbine-generator during all anticipated normal operating conditions to full power operation.

- Shutdown heat removal and reactor water cleanup shall be accommodated by the admission, distribution and return of flow from the RWCU/SDCS System.
- The internals shall be arranged to facilitate refueling operations.
- The internals shall be designed to facilitate inspection and replaceability.

Design Loading Categories

Core support structures and safety class internals stress limits shall be consistent with ASME Code Section III, Subsection NG (or other equivalent stress limits). For these components, Level A, B, C, and D service limits will be applied to the normal, upset, emergency, and faulted loading conditions, respectively, to be defined in design specifications.

Response of Internals Due to Steam Line Break Accident

The maximum pressure loads acting on the reactor internal components is expected to result from a steamline break upstream of the main steam isolation valve. This has been confirmed via analytical comparison of liquid versus steamline breaks.

Stress and Fatigue Limits for Core Support Structures

The design and construction of the core support structures shall be in accordance with ASME Code Section III, Subsection NG (or equivalent code requirements).

Stress, Deformation, and Fatigue Limits for Safety Class and Other Reactor Internals (Except Core Support Structures)

For safety-related reactor internals, the stress deformation and fatigue criteria are based on the criteria established in applicable codes and standards for similar equipment, by manufacturers standards, or by empirical methods based on field experience and testing.

Components inside the RPV such as control rods, which must move during accident conditions, will be examined to determine if adequate clearances exist during emergency and faulted conditions. The forcing functions applicable to the reactor internals will be determined.

The design criteria, loading conditions, and analyses that provide the basis for the design of the safety class reactor internals other than the core support structures shall meet the guidelines of Section NG-3000 of ASME Code and will be constructed so as not to adversely affect the integrity of the core support structures (NG-1122).

The design requirements for equipment classified as non-safety (other) class internals (e.g., steam dryers, separators and chimney) shall be specified with appropriate consideration of the intended service of the equipment and expected plant and environmental conditions under which it will operate. Where Code design requirements are not applicable, accepted industry or engineering practices is used.

2.4.5 System Operation

The Reactor System, during its design life, is subject to different planned and unplanned operating conditions or events during which environmental conditions in the RPV change significantly. These environmental conditions will be depicted in RPV irradiation data drawings, and RPV and RPV nozzles thermal cycle drawings. These conditions--that is, each occurrence of each different condition--may cause the RPV and (sometimes) its internals to undergo a stress cycle, some of which are fairly large (that is, the amplitude of stress changes/reversals may be significant) but occur only infrequently, while others may be fairly small but which may be quite numerous. Altogether, such stress cycles produce a cumulative effect termed "fatigue utilization" on the RPV and/or its specific internals. The reactor internals designer takes such predicted life-cycle history fully into account, assuring that no component of the Reactor System reaches an end to its useful lifetime because of reaching a point where the permitted cyclical stress loading--the "fatigue utilization"--has reached 100%.

The RPV, and thus some of the reactor assembly internals, may be subject to these different fatigue-utilizing conditions based on their expected frequency of occurrence and based on the design lifetime, that is, 60 years of service. The different plant operating conditions typically identified are:

Normal Operation and Load Maneuvers. Some of the normal operation conditions include:

COLD STARTUP and heatup to HIGH PRESSURE HOT STANDBY;

Heatup from LOW PRESSURE HOT STANDBY to HIGH PRESSURE HOT STANDBY;

STEADY STATE FULL POWER;

Cooldown from HIGH PRESSURE HOT STANDBY to COLD SHUTDOWN;

DAILY LOAD REDUCTION and RECOVERY TO FULL POWER OPERATION.

Planned Testing. These tests are performed to ensure RPV system integrity and operability. Some of the planned tests include:

System leakage and hydrostatic tests;

Shop hydrostatic tests;

Scram tests.

Moderately Frequent Events. These events or transients are defined as any deviation from normal operating conditions anticipated to occur often over the life of the plant. Some of the events included are:

Turbine Trip;

Main Steam Isolation Valve (MSIV) Closure;

Loss of Feedwater.

Infrequent Transients. These events or transients are those deviations from normal operation, which may require shutdown or correction or repair of damage in the system. Some of the events included are:

Turbine Trip with Bypass Failure;

Inadvertent Automatic Depressurization Subsystem (ADS) depressurization;

Generator Load Rejection with Bypass Failure.

Postulated Accidents. These are the events or transients with extremely low probability of occurrence. Some of these transients include:

Anticipated Transient Without Scram (ATWS);

Loss of Coolant Accident.

2.4.6 System Operation Modes

The various modes of operation of the Reactor System are identical to those described for the NBS System in Section 3.1.

2.4.7 Testing and Inspection Requirements

Every reactor and its connected piping will undergo a system hydrostatic test, before core loading, to confirm weld integrity of certain field-completed welds. For this testing, the control rod drive housings and the in-core housings are installed, and all piping welds to RPV nozzles are completed.

Tests specifically for the Reactor System are basically of two kinds:

- A steam separation system test, to confirm moisture separation effectiveness of the dryers (and thus, indirectly, the performance of the steam separators);
- A flow-induced-vibrations (FIV) test, performed on first-of-a-kind reactor designs.

The former test is based on measuring radioisotope levels in the main condenser condensate. Techniques exist for enabling the deduction of the level of moisture carried by the steam leaving the reactor--at least to a measurement uncertainty level sufficient to render a valid conclusion whether the steam inlet moisture levels supplied to the turbine-generator are within that supplier's equipment warranty levels regarding performance and lifetime at limit-condition inlet moisture contents.

Flow-Induced Vibration (FIV) Testing: In order to assure that FIV loads are acceptable, analysis, out-of-reactor testing, and finally in-reactor testing are performed. At the inception of a new component design, FIV analysis using finite element structural models and fluid models is performed to determine the expected FIV response. If the analytic results indicate that responses are close to the allowable limit, or if there is a great deal of uncertainty in the analysis process, then out-of-reactor testing is performed. If the results indicate significant margin, then only in-reactor testing to confirm adequacy of the design is needed.

In-reactor FIV testing is done on a first-of-a-kind reactor assembly to confirm adequacy of the design, manufacture, and assembly of reactor vessel internals with respect to the effects of flow-induced vibration. These tests assure that excessive vibration amplitudes, if they exist, will be detected early. The data collected help establish the margins to safety associated with steady-state and anticipated transient conditions, and help confirm the pretest analytical vibration calculations and any individual component test results.

FIV data is recorded for many different plant steady state operating conditions and transients that would be experienced during normal plant operations Most of the data collection during startup testing is made while the standard startup tests are performed, with very few special tests required specially for the FIV evaluation. During the planning phase, all of these tests are planned in detail.

The test instrumentation is installed near the end of reactor internal installation work. The data acquisition system is installed at the same time. A thorough pre-test inspection of the vessel internals is performed to record the condition of the internals equipment before the startup FIV testing. The FIV tests are performed according to the plan during startup testing. As data is obtained, evaluation is performed. During the actual test, acceptance criteria are utilized for quick decision making to proceed with testing. More extensive evaluations are performed after each major test phase to confirm that stress levels are acceptably low before proceeding to the next major phase.

Following the FIV testing during the startup test program, a final inspection is made. Its purpose is to look for any evidence of vibration related problems such as cracks, unusual wear or loose parts. Some time after the conclusion of full power testing, the FIV instrumentation is removed according to the plan. In many cases this has been done at the first refueling outage. However, in other cases it has been completed prior to commercial turnover of the plant. The data reduction and evaluation work is completed in the months following power testing and a final report is prepared to confirm the ability of the internals design to withstand flow induced vibrations.

Succeeding plants of identical design are subject only to the inspection portion of this program. Specifically, the pre-test inspection, startup testing and post-test inspection, are performed. No instrumentation is required unless the design has changed or it is operated differently (such as higher flow rates or powers).

Inservice Inspections: The ASME Code, Section XI, “Rules for Inservice Inspection of Nuclear Power Plant Components” requires extensive inspections of the reactor pressure vessel, pressure retaining components, core support components and internal components. The

inspections, performed during refueling outages, can consist of pressure tests (leakage or hydrotest), visual inspections and/or non-destructive examinations.

2.4.8 Instrumentation Requirements

The main instrumentation that addresses the thermal-hydraulic performance of the nuclear steam supply system (NSSS) is the instrumentation associated with the NBS System, described in Section 3.1.

2.5 Reactor System - Reactor Pressure Vessel

2.5.1 Summary Description

The ESBWR **reactor pressure vessel (RPV)** (see Figure 2.4-1) is a vertical, internally clad, cylindrical pressure vessel with elliptical upper and lower heads. ESBWR's RPV has the same nominal internal diameter of 7112 mm, after cladding is applied and the same nominal shell thickness of 182 mm as the RPV's built for ABWR. But ESBWR's overall RPV height, however, will be greater than the predecessor RPV's. To keep height minimized, the ESBWR RPV has an elliptically shaped, instead of spherically shaped, top head. Refer to Table 2.5-1 for a comparison of ESBWR pressure vessel versus its predecessor the ABWR.

The cylindrical shell portion of the ESBWR RPV is fabricated of low alloy steel, the interior of which is clad with stainless steel weld overlay of 3.2 mm (0.13 in.), (minimum thickness). The nozzle weld zones are left unclad to provide both easier and more accurate inservice inspections. This RPV is designed with an overall centerline inside height of 27.7 m . RPV design pressure is 8.62 MPa-gauge and the design temperature is 302°C .

In all likelihood the ESBWR pressure vessel will be shipped to the construction in two or more pieces and the final circumferential welds performed in the vertical position with the vessel base on the support pedestal. Field fabrication of past BWR vessels has been successfully accomplished.

The elliptical bottom head portion of the RPV is also fabricated of low alloy steel, the interior of which is clad with Ni-Cr-Fe alloy. ESBWR's bottom head will be less thickness than the bottom head size used on the ABWR, a measure taken to account for the reduced number of control rod drive penetrations needed for ESBWR, with the F lattice design. Resulting bottom head nominal thickness will be 242 mm .

The RPV will be designed, fabricated, tested, inspected, and stamped in accordance with ASME Code, Section III, Division 1, Class 1 requirements (or equivalent). In addition, the RPV design documents will impose certain additional requirements to ensure integrity and safety of the vessel. The RPV and its supports are classified as Seismic Category-1 components. The materials expected to be used in the RPV are listed in Table 2.5-2. The RPV is designed to give a 60-year service lifetime.

Table 2.5-1 RPV Comparison ESBWR vs. ABWR

Parameter	ABWR	ESBWR
Inner diameter (mm)	7112	7112
Height, inner (m)	21.1	27.7
Weight (tons)	~900	~1100
Bottom head thickness (mm)	263	242
Number of CRDs	205	121
Number of nozzles	31	60

Table 2.5-2 RPV Materials

Component	Material	Specification (ASTM/ASME)
Shell and Heads	Mn-1/2 Mo-1/2 Ni ¾ Ni-1/2 Mo-Cr-V Low alloy steel	SA-533, Grade B, Class 1 SA-508, Class 3
Shell and Head Flange	¾ Ni-1/2 Mo-Cr-V Low alloy steel	SA-508, Class 3
Nozzles	¾ Ni-1/2 Mo-Cr-V Low alloy steel	SA-508, Class 3
Drain Nozzles	¾ Ni-1/2 Mo-Cr-V Low alloy steel	SA-508, Class 3
Instrumentation Nozzles	Cr-Ni-Mo Stainless Steel	SA-182, Type F316L* or SA-336, Class F8 or F8M or SB-166, SB-167
Stub Tubes	Ni-Cr-Fe	SB-564, Grade N06600

* Carbon content is not to exceed 0.020%

2.5.1.1 RPV Top Head

The elliptically shaped removable **RPV top head** is also fabricated of low alloy steel, and is unclad except for the flange O-ring seal surfaces, which will be clad with either stainless steel or Ni-Cr-Fe, alloy. The matching part of these O-ring seal surfaces on the RPV body flange will also be clad with the same cladding material used for these sealing surfaces on the RPV top head.

The RPV top head is secured to the RPV by 80 sets of fasteners (studs and nuts). These nuts are tightened in groups of (typically) four at a time, using an automatic or semi-automatic four-stud-tensioner-and-head-carousel device.

The vessel flanges are sealed with two concentric metal seal rings that are captured in O-ring grooves in the RPV head. These seals are designed to permit no detectable leakage through the inner or outer seal at any operating condition, including heating to operating pressure and temperature at a maximum rate of 55°C (100°F) in any one-hour period. To detect seal failure, a vent tap is located between the two seal rings. A monitor line is attached to the tap to provide an indication of leakage from the inner ring seal. A cover, known as a seal surface protector, is placed atop the exposed RPV flange seal surface immediately upon RPV head removal to preclude any mishaps from damaging those surfaces.

Just prior to lowering the RPV head into place on the RPV flange, stud-caps are placed over the tops of three of the studs to serve as guide-pins for obtaining correct placement of the head. Each stud-cap has a conically shaped top, and each cap extends a different length above its stud so as to give sequential engagement of the head onto these guide-pins as the head-lowering operation is performed. These stud-caps are removed once the RPV top head is in place.

The RPV head weighs approximately 100 t. With the head strongback and other appurtenances that are used when making a lift of the RPV top head, total weight requiring to be lifted amounts to approximately 120 t.

2.5.1.2 Shroud Support

Twelve **shroud support brackets,** resembling large thick “fins”, welded to the RPV inside wall at the bottommost cylindrical portion of the RPV and projecting approximately 500 mm into the RPV lower downcomer annulus region, provide vertical and radial mounting supports for the bottommost rim of the core shroud. These shroud brackets, 150 mm thick and made of Ni-Cr-Fe, support the combined weights of:

- the core shroud;
- the chimney head and steam separator assembly;
- the chimney and partitions assembly;
- the top guide;

- the core plate; and
- the fuel bundles.

[The dryer assembly weight is supported via brackets welded to the inside of the RPV.]

These shroud brackets are classified as core support structures and are designed in accordance with the ASME Section III, Subsection NG (or equivalent).

2.5.1.3 Vessel Support

The **vessel support** (Figure 2.5-1) is considered a **sliding support block** type as defined in ASME, Section III, NF-3124. Sliding support blocks are provided at a number of positions around the periphery of the vessel. One end of each sliding support block is bolted to a continuous circumferential RPV flange that is forged integral to the vessel shell ring at that RPV elevation. The other end of each sliding support block is captured into sets of steel guide blocks that are attached to the reactor pedestal by anchor bolts. These anchor bolts are set in sleeves, which are embedded in the pedestal. Under this configuration each sliding support block is relatively free to expand in the radial direction but is seismically restrained in the vertical and vessel tangential directions.

These vessel support components are constructed of low alloy or carbon steel. The vessel support is designed to withstand the loading conditions specified in RPV design documents and meet the stress criteria of ASME Code, Section III, Subsection NF (or equivalent).

2.5.1.4 Control Rod Drive Housings

For a detailed description of the control rod drive housings, the reader is referred to Section 2.4.3.2 of this report.

2.5.1.5 Neutron Flux Monitor In-Core Housings

For a detailed description of the neutron flux monitor in-core guide tubes, stabilizers and the in-core housings that penetrate the RPV lower head, the reader is referred to Section 2.4.3.2 of this report.

2.5.1.6 Reactor Vessel Insulation

The RPV insulation is reflective metal type, constructed entirely of series 300 stainless steel and designed for a 60-year life. The insulation is made up of a combination of two basic shapes: flat panels and cylindrical panels. The insulation for the bottom head and lower shell course inside the vessel support is a vertical cylindrical panel approximately 75 to 100 mm thick. This panel extends vertically up to the vessel support region. There is also a horizontal panel between 75 to 100 mm thick which connects across the bottom of the vertical insulation panels. The CRD housings, in-core housings, and drain nozzles penetrate this panel. These components are not insulated individually.

The insulation for the RPV is supported from the reactor shield wall surrounding the vessel and not from the vessel shell. Insulation for the upper head and flange is supported by a steel frame independent of the vessel.

At operating conditions, the insulation on the shield wall and around the refueling bellows has an average maximum heat transfer rate of 176 kcal/m^{2}h of outside insulation surface. The maximum heat transfer rate for insulation on the top head is 163 kcal/m^{2}h. The approximate minimum air temperatures outside the vessel and insulation are as follows:

- 38°C, below and outside bottom head insulation and inside the vessel support region;
- 38°C, outside the vessel support; and
- 57°C, above the top head.

2.5.1.7 Reactor Vessel Nozzles

All piping connected to the RPV will be designed so as not to impose any piping reaction loads (thermal, deadweight, dynamic) that exceed design allowable loads on any given RPV nozzle. Table 2.5-3 provides a list of all ESBWR RPV penetrations. Four RWCU/SDCS drain nozzles are provided in the lower elevations of the RPV. The feedwater inlet nozzles and isolation condenser return nozzles have welded double thermal sleeves. Nozzles connecting to stainless steel piping have safe ends or extensions made of stainless steel. Nozzles which have carbon steel pipe attached have carbon steel safe ends. These safe ends or extensions are to be welded to the nozzles after the RPV is heat treated to avoid furnace sensitization of the stainless steel. All nozzles are low alloy steel, except, the RWCU/SDCS drain nozzles which are of (weld-build-up) carbon steel, and partial penetration instrumentation water level nozzles, which are of part-stainless, part Ni-Cr-Fe material. The safe end materials used are compatible with the material of the mating pipes. The design of the nozzles will be in accordance with ASME Section III, Subsection NB (or equivalent) and meet the applicable requirements of the RPV design documents.

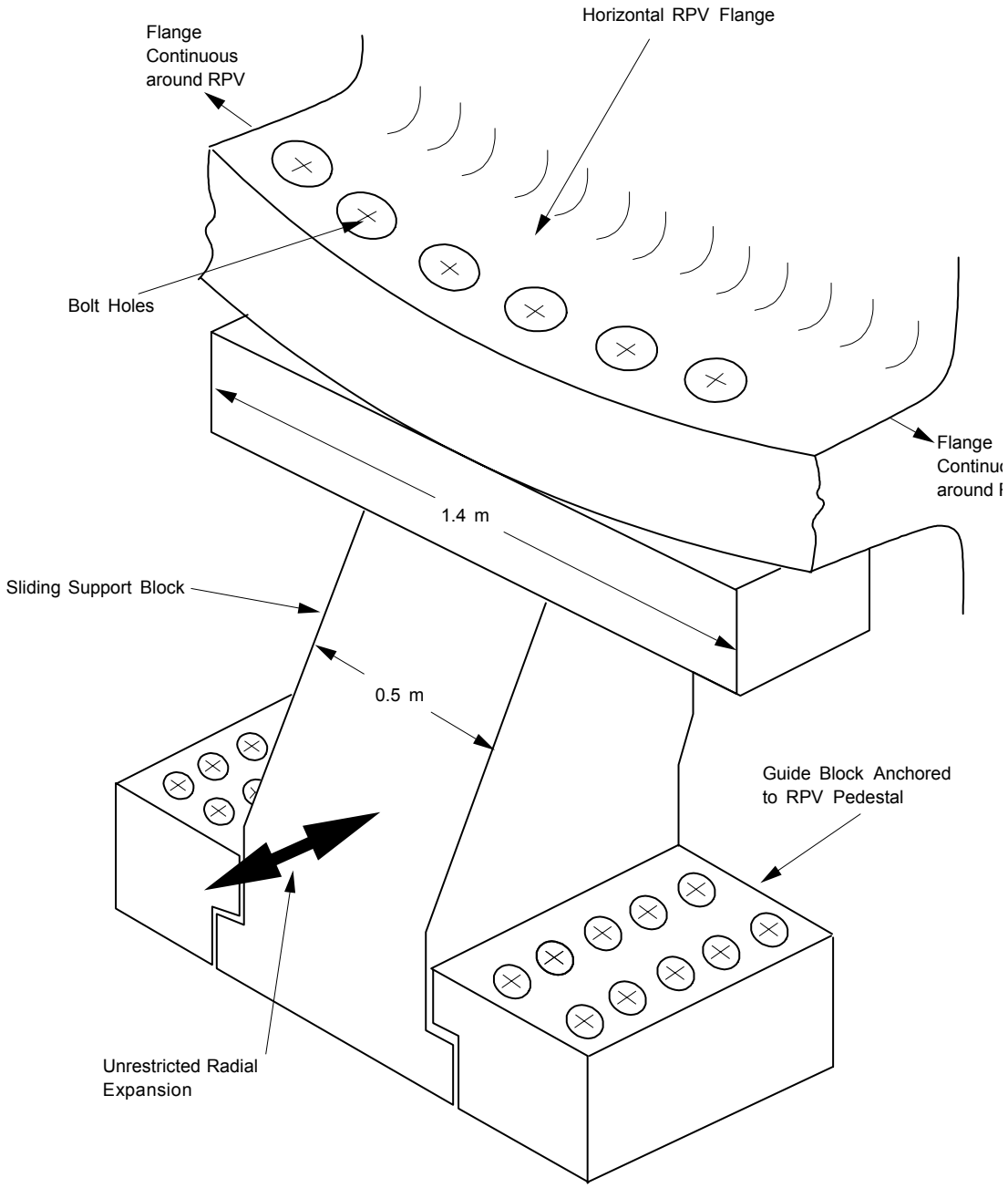

Figure 2.5.1-1 ESBWR RPV Vessel Support - Sliding Block Type

2.5.1.8 Reactor Vessel Fasteners

The RPV top head (flange) is connected to the reactor vessel shell flange by multiple sets of threaded studs and nuts. The stud is typically 1760 mm long, and nominally 163 mm diameter at its largest cross-section. The stud weighs approximately 285 kg . The studs are threaded into the vessel shell flange using a pneumatic-powered or electric motor driven stud removal/insertion tool (stud handling tool). (Utility practice generally favors removing all the studs each refueling outage.) To tighten the RPV top head to the RPV vessel, the installed studs are tensioned, in sequential groups-of-four, in incremental steps, up to the ultimate specified total preload. Running down the center of each stud is a 21 mm diameter hole, into which measuring rods with dial indicators are placed to measure stud extension during stud tensioning. After tensioning the installed stud to the required pre-load for that point in the tightening sequence, a pneumatic-powered or electric-motor-driven "nut runner" device rotates the nut down until the nut "bottoms" onto the flange to assume its loaded condition.

Hardness tests are performed on all studs and nuts to demonstrate that heat treatment has been properly performed. Prior to assembly, phosphate coating and thread lubricants are applied in accordance with the requirements of the design documents. The RPV studs and nuts have a design lifetime of 60 years.

2.5.1.9 Materials of Construction

All material used in the construction of the RPV will conform to the requirements of ASME Code, Section II materials (or equivalent). In addition, the materials used in the RPV will meet the requirements of RPV design documents to improve the quality of the materials. The vessel heads, shells, flanges, and major nozzles are fabricated from low-alloy steel. The RPV design minimizes the need for longitudinal welds and makes extensive use of ring forgings. Special requirements for the interior surfaces of the shell rings include an austenitic stainless steel weld overlay. The beltline region is a single forging made from low-alloy steel material.

These construction materials were selected because they provide adequate strength, fracture toughness, fabricability, and compatibility with the BWR environment. Their suitability has been demonstrated by long-term successful operating experience in reactor service.

2.5.2 Pressure/Temperature Limits

Licensing regulations for nuclear plants require, in part, that the reactor coolant pressure boundary (RCPB) be designed with sufficient margin to ensure that, when stressed under operating, maintenance, testing, and postulated accident conditions:

- the boundary behaves in a nonbrittle (ductile) manner;
- the probability of a rapidly propagating fracture is minimized; and
- the design accounts for the uncertainties in determining the effects of radiation on material properties.

In order to meet these licensing requirements, the changes in fracture toughness of the reactor vessel materials caused by neutron irradiation throughout the RPV service life must be calculated.

Licensing requirements, specifically: USNRC Regulatory Guide 1.99 and ASTM E-185, necessitate the following calculations and/or actions:

1. The predictions of the effect of neutron irradiation on vessel material from the results of pertinent radiation effect studies.

2. Determination of the upper limit for pressure as a function of temperature during heatup and cooldown for a given service period in terms of the predicted value of the adjusted reference temperature at the end of the service life accounting for neutron embrittlement.

3. Identification of the regions of the RPV that are exposed to a neutron fluence > 1×10^{17} n/cm^2. This is normally the reactor vessel beltline.

4. Requires that the RPV beltline material exposed to fluence > 1×10^{17} n/cm^2 be placed in a surveillance program.

For ESBWR the pressure/temperature operating limit curves and the temperature limits for RPV bolt up, hydrostatic and leak pressure tests and startup will be documented in the Safety Analysis Report.

2.5.2.1 Material Surveillance

The materials surveillance program monitors changes in the fracture toughness properties of ferritic materials in the RPV beltline region resulting from exposure to neutron irradiation and thermal environment.

Materials for the program are selected to represent materials used in the RPV beltline region. Specimens are manufactured from a forging actually used in the beltline and thus represent base metal. The base metal is heat treated in a manner, which simulates the actual heat treatment performed on the beltline region of the completed vessel. Each in-reactor surveillance capsule contains a minimum of 36 Charpy V-notch and 6 tensile specimens as defined by ASTM E-185. The capsule loading consists of 12 Charpy V specimens each of base metal, weld metal, HAZ material, and three tensile specimens each from base metal and weld metal. A set of out-of-reactor beltline Charpy V-notch specimens, tensile specimens, and archive material are provided with the surveillance test specimens. Neutron dosimeters and temperature monitors will be located within the capsules.

Four capsules are provided since the design life of the RPV is 60 years and predicted transition temperature shift is less than ~ 61°C at the inside of the RPV.

A plant operator can expect the following preliminary specimen withdrawal schedule:

- first capsule: after 6 effective full power years;

- second capsule: after 15-20 effective full power years;
- third capsule: with an exposure not to exceed the peak EOL fluence;
- fourth capsule: schedule determined based on results of first three capsules.

2.5.2.2 Predicted Shift in RT_{NDT} and Drop in Upper-Shelf Energy (USE)

For design purposes, the adjusted reference nil ductility temperature and drop in the USE for the ESBWR RPV is predicted in accordance with the requirements of Regulatory Guide 1.99. The calculations are based on the specified limits on phosphorous (0.012%), vanadium (0.05%), copper (0.08%) and nickel (1.2%) in the weld material. In forgings, the limits are copper (0.05%), phosphorous (0.012%) and nickel (1.0%).

In-place annealing of the RPV, because of radiation embrittlement, is not necessary because the predicted value of adjusted RT_{NDT} does not exceed 93°C .

A surveillance program will be conducted on RPV material as outlined above. The surveillance program will include samples of base metal, weld metal and HAZ material of the beltline forging.

2.5.2.3 RPV Integrity

The materials, equipment, and services associated with the RPV and appurtenances will conform to the requirements of the RPV design documents. Measures to ensure conformance include:

- provisions for source evaluation and selection;
- objective evidence of quality furnished;
- inspection at the vendor source; and
- examination of the completed RPV.

GE provides inspection surveillance of the RPV fabricator in-process manufacturing, fabrication, and testing operations in accordance with the GE quality assurance program and approved inspection procedures. The RPV fabricator is responsible for the first level inspection of manufacturing, fabrication, and testing activities, and GE is responsible for the first level of audit and surveillance inspection.

Adequate documentary evidence that the RPV material, manufacture, testing, and inspection conforms to the specified quality assurance requirements contained in the design documents will be available at the fabricator's plant site.

An investigation of the structural integrity of BWR RPV's during a design basis accident (DBA) has been conducted (Reference 2.5-1). It has been determined, based on methods of

fracture mechanics, that no failure of the vessel by brittle fracture as a result of DBA will occur. The investigation included:

- A comprehensive thermal analysis considering the effect of blowdown and the Gravity-Driven Cooling System reflooding;
- A stress analysis considering the effects of pressure, temperature, seismic load, dynamic load, dead weight, and residual stresses;
- Assessment of the radiation effect on material toughness (RT_{NDT} shift and critical stress intensity); and
- Methods for calculating crack tip stress intensity associated with a non-uniform stress field following the DBA.

This analysis incorporated very conservative assumptions in all areas (particularly in the areas of heat transfer, stress analysis, effects of radiation on material toughness, and crack tip stress intensity). Based on the results reported, which provide an upper-bound approach, this analysis concluded that catastrophic failure of the RPV due to DBA is impossible from a fracture mechanics point of view. In the case studies, even if an acute flaw does form on the vessel inner wall, it will not propagate as the result of the DBA.

2.5.3 Design Bases

2.5.3.1 Safety Design Basis

The RPV and appurtenances are required to withstand different combinations of loadings for loading conditions specified in RPV design documents resulting from operation under normal and abnormal conditions.

To minimize the possibility of brittle fracture of the nuclear system process barrier, the following are required:

- Impact properties at temperatures related to vessel operation will be specified for materials used in the reactor vessel;
- Expected shifts in transition temperature during design life as a result of environmental conditions, such as neutron flux, are considered in the design and operational limitations assure that RT_{NDT} temperature shifts are accounted for in reactor operation; and
- Operational margins to be observed with regard to the transition temperature shall be specified for each mode of operation.

2.5.3.2 Power Generation Design Bases

The power generation design bases of the reactor vessel are:

- Develop a simplified Reactor System that provides all safety-related functions [i.e., that failure to provide a safety function is incredible (probability of failure is less than $1x10^{-6}$ per year)];

- Develop the ESBWR vessel with a design life of 60 years with a total plant availability of 92% or greater; and

- Design the RPV and appurtenances to allow for a suitable program of inspection and surveillance.

2.5.4 Configuration and Special Features

The ESBWR RPV configuration has been designed with several advances and special features that differentiates it from other BWR RPV's and their internals. Among these advances not previously mentioned are:

- No large bore pipes penetrate the RPV below the top of the active fuel (TAF) that could result in a loss-of-coolant accident (LOCA). The ESBWR relies on natural circulation, which significantly simplifies plant operation and eliminates the safety-related recirculation system and associated large bore piping which penetrated the RPV of previous BWRs below TAF.

- All nozzles greater than 50 mm (2 inches) penetrating the RPV from elevation vessel 0 to three meters above TAF are designed with an integral venturi with a minimum throat diameter to restrict the loss of vessel inventory in the event of a pipe break.

- The ESBWR RPV is designed with (generally) removable internals, including the core shroud. (See Section 2.4 for a more comprehensive description of the removable/replaceable/ repairable aspects of these RPV internals.)

- The ESBWR RPV height was increased above the amount simply needed to ensure core coverage during the depressurization following a DBA. The height increase was also needed to increase the chimney height and thus natural circulation flow per bundle, thereby allowing the core power density difference between these designs (54 kW/l for ESBWR vs. 42.0 kW/l for SBWR). The core flow was also benefited by improved bundle design and reduced-pressure-drop steam separators, giving higher flow rate per bundle and improved core stability margins.

- The ESBWR RPV is designed with a welded double thermal sleeve feedwater nozzle to reduce thermal stresses.

- The ESBWR RPV is designed with forged shell rings to minimize RPV welds and weld inspection in the high fluence region of the vessel.

- Automatic ISI equipment for all RPV weld inspections including bottom head inspection has been developed and tested to minimize worker exposure and speed ISI inspection time.

2.5.5 System Operation

Procedural controls on plant operation will be implemented to hold thermal stresses within acceptable ranges and to meet the required pressure/temperature limits. The average rate of change of reactor coolant temperature during normal heatup and cooldown shall not exceed 55°C during any one-hour period. This limit assures that the vessel closure, closure studs, vessel support skirt, CRD housing, and stub tube stresses and fatigue usage remain within acceptable limits.

These operational limits, when maintained, ensure that the stress limits within the RPV and its components are within the thermal limits to which the vessel was designed for normal operating conditions. To maintain the integrity of the RPV in the event that these operational limits are exceeded, the RPV will be designed to withstand a limited number of transients caused by operator error. For abnormal operating conditions where safety systems or controls provide an automatic temperature and pressure response in the RPV, the RPV integrity is maintained, since the severest anticipated transients will be included in the RPV design conditions. RPV integrity will be maintained during the most severe postulated transients, since all such transients are evaluated in the design process.

2.5.6 Testing and Inspection Requirements

The RPV undergoes a field hydrostatic test, to 1.25 times design pressure, at the completion of field fabrication of the final longitudinal welds. Then, prior to preoperational tests when all system piping comprising the RCPB has been welded to the RPV, another hydrostatic test at 1.25 times design pressure is again undertaken.

The RPV will be examined once prior to startup to satisfy the preoperational ASME Code requirements (or equivalent). Subsequent inservice inspections are scheduled and performed in accordance with applicable specific requirements.

Every ten years throughout plant service lifetime, the NSSS is subjected to another hydrostatic test, conducted to 1.10 times operating pressure.

The materials surveillance program monitors changes in the fracture toughness properties of ferritic materials in the RPV beltline region resulting from exposure to neutron irradiation and thermal environment. Specimens of actual RPV beltline material will be exposed in the RPV and periodically withdrawn for impact testing. Operating procedures will be modified in accordance with test results to assure adequate brittle fracture control.

Material surveillance programs and inservice inspection programs provide assurance that brittle fracture control and pressure vessel integrity will be maintained throughout the service lifetime of the RPV.

2.5.7 Instrumentation Requirements

The RPV has no special instrumentation of its own.

2.5.8 References

2.5-1 An Analytical Study on Brittle Fracture of GE-BWR Vessel Subject to the Design Basis Accident (NEDO-10029).

Table 2.5-3 ESBWR Nozzles

NAME	QUANTITY	ELEVATION/AZIMUTH (PRELIMINARY)
MAIN STEAM LINE NOZZLES	4	22840 mm 72°, 108°, 252°, 288°
FEEDWATER NOZZLES	6	18915 mm 30°, 90°, 150°, 210°, 270°, 330°
DPV/IC NOZZLES	4	22410 mm 45°, 135°, 225°, 315°
RWCU/SDC NOZZLES	2	17215 mm 90°, 270°
IC RETURN NOZZLES	4	13025 mm 20°, 160°, 200°, 340°
PCCS CONDENSATE RETURN NOZZLES	4	Nozzle elevation and azimuth not yet determined
GDCS EQUALIZING LINE NOZZLES	4	8453 mm 6°, 96°, 186°, 276°
GDCS NOZZLES	8	10453 mm 14 °, 66°, 104°, 156°, 194°, 246°, 284°, 336°
INSTRUMENT NOZZLES REFERENCE LEG	4	Elevation not yet determined Azimuth not yet specified
INSTRUMENTATION NOZZLES	12	4 nozzles each at elevation to be determined Azimuth not yet specified
SLCS NOZZLES	2	Elevation not yet determined Azimuth not yet specified
RWCU/SDCS DRAINLINE NOZZLES (2 per Train)	4	Routed inside bottom head, elevation not yet specified
VENT NOZZLE	1	Approximately 24000 mm 45° routed inside RPV head
SEAL LEAK DETECTION NOZZLE	1	Approximately 24000 mm 30°

Notes: Nozzle elevations have been adjusted for an RPV with a reference inside height of 27.6 m.

2.6 Reactor Heat Balance

The reactor heat balance relates the thermal-hydraulic parameters to the plant steam and feedwater flow conditions at the desired core thermal power level. Table 2.6-1 summarizes the input parameters and assumptions used in the ESBWR heat balance calculation for the 100% power condition. Figure 2.6-1 shows the ESBWR heat balance information for 100% power condition.

The calculation is performed with the RPV configuration as described in Sections 2.4 and 2.5. The key dimensions and component specifications are also shown in Figure 2.6-1. In the calculation, it is assumed that: (1) the steam-water mixture in the steam dome is in a saturated state, and (2) the water in the downcomer region above the feedwater sparger is saturated and below the sparger is subcooled. The pressure drops through the core and steam separators are calculated based on experimental loss coefficients.

Table 2.6-1 Reactor Heat Balance Input Parameters

Definition	Comments
Steam enthalpy	Based on a dome pressure of 7.171 MPa absolute for rated conditions and 0.1 percent moisture carryover from dryers.
Feedwater enthalpy	Based on a feedwater temperature of 215.6°C.
Cleanup flow	Based on maximum system design capability of 1 percent of rated feedwater flow.
Heat loss in reactor cleanup system	Based on reactor cleanup system design.
Control rod drive purge flow	Based on CRD system design.
Enthalpy of control rod drive purge flow	Based on condensate temperature.
System thermal heat losses	Assumption consistent with present product line design values.
Core thermal power	Based on core design and basic design conditions.
Core flow	Realistic core flow at 100% power condition.

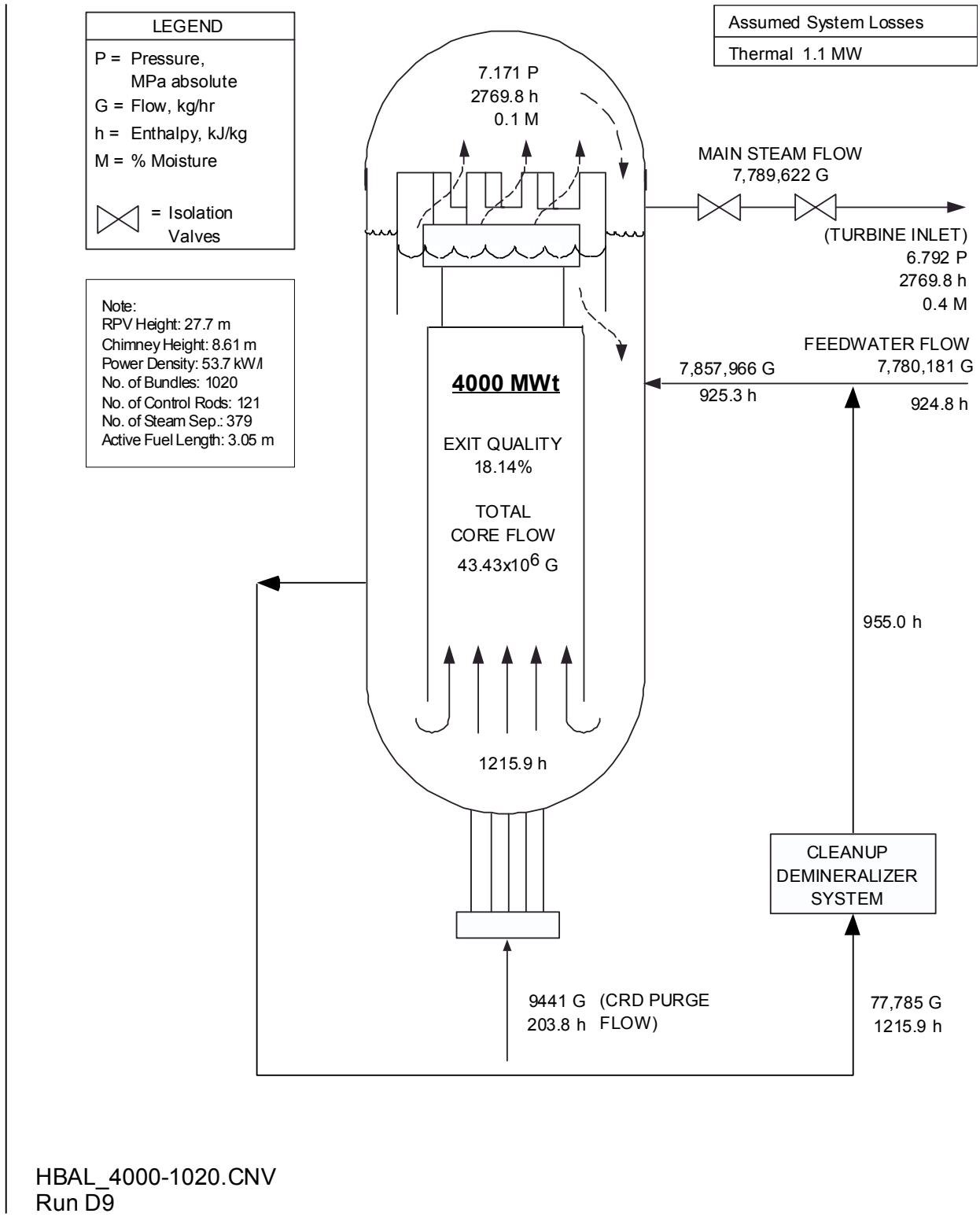

HBAL_4000-1020.CNV
Run D9

Figure 2.6-1 ESBWR System Heat Balance at 100% Power

2.7 Steam Separation and Drying System

2.7.1 Description and Functioning of Steam Separation System

2.7.1.1 Introduction

In a nuclear boiling water reactor (BWR), steam is generated in the core by boiling part of the recirculating water. A two-phase mixture of saturated water and saturated steam exits the core at –various qualities up to 18%.. This two-phase mixture is separated and the saturated steam flows from the reactor pressure vessel to the turbine generator. It is desirable for the steam to leave the reactor vessel with a minimum amount of entrained moisture. This results in greater turbine efficiency, less turbine wear, and a minimum amount of radioactivity in the turbine building and the condensate system.

In early BWR designs, natural circulation was the selected mode of coolant flow through the nuclear core. These designs also used free surface separation, in which steam escapes from the surface of the steam-water mixture by gravity. However, the velocity of steam leaving the steam-water interface in free surface separation is limited to about 0.4 m/sec (1.3 ft/sec) to prevent excess moisture entrainment (called "carryover") in the exiting steam and steam entrainment (called "carryunder") in the returning water. Free surface separation was determined to be impractical for larger cores of higher power levels. Mechanical devices were needed to allow steam velocities in excess of the two phase region velocity. The mechanical device imposes an additional force (besides gravity) on the steam-water mixture to impart separation. Cyclone separators were the prime candidate for such a device.

Most high power fossil boiler systems utilize steam drums with cyclone separators as the primary source of separation and corrugated scrubbers as secondary source of separation. The primary source usually removes the majority of water from the steam-water mixture and the secondary source handles the remaining moisture, usually at a substantially lower moisture content. The BWR internal steam separation system has followed the design theory of the fossil boiler steam drum, utilizing an axial flow steam separator as primary and a "corrugated" type of steam dryer as secondary.

The early design challenge was to provide a primary steam separator that would handle a wide range of flows to the required maximum with a relatively low pressure drop, and accomplish this over a wide range of water level. In addition, fossil steam boilers operate at much higher steam qualities than the BWR reactor. Therefore no commercial separators were available originally to adapt to the BWR. The result was a lengthy and costly steam separator development program for the unique features of a boiling water reactor.

2.7.1.2 Steam Separation Theory

[[

{3}]]

[[

{3}]]

Figure 2.7-1 ESBWR Steam Separator Configuration

[[

{3}]]

Figure 2.7-2 Steam Separator Theory (Swirl and Separation)

Table 2.7-1

[[

{3}]]

Table 2.7-1 (Continued)

[[

{3}]]

2.7.1.3 Steam Dryer Theory

[[

{3}]]

[[

{3}]]

[[

{3}]]

Figure 2.7-3 Steam Dryer Unit Cutaway

[[

{3}]]

Figure 2.7-4 Steam Dryer Assembly and Cutaway View

2.7.1.4 The Steam Separation System

[[

{3}]]

[[

{3}]]

Figure 2.7-5 Steam System Carryover Limit

[[

{3}]]

Figure 2.7-6 Performance of AS-2B Separator (11.5 inch pitch, 252,000 lb/hr/separator flow)

2.7.2 Design Bases of the Steam Separation System

[[

{3}]]

2.8 Principal NSSS Trip Setpoints and Trip-Response Actions

2.8.1 Summary Description

The ESBWR is designed with instrumentation and controls to monitor process variables and systems over their anticipated range during normal operation, anticipated operational occurrences, and during accident conditions to assure adequate plant safety. The monitored process variables and systems include those that affect the fission process, the integrity of the reactor core, the reactor coolant pressure boundary (RCPB) and the containment and its associated systems. If the redundant two-out-of-four sensor channel trip logic monitoring a process variable or system exceeds a trip setpoint, the Reactor Protection System (RPS System) initiates action to protect the plant. In ESBWR the RPS System will initiate a scram, RCPB isolation and/or pressure relief as indicated in Table 2.8-1. This Table lists the ESBWR protective and engineered safeguard actions. The principal NSSS trip setpoint and trip response actions are covered below. The nominal NSSS trip setpoints are summarized in Table 2.8-2.

2.8.2 Neutron Flux Trip Setpoints

2.8.2.1 Neutron Flux-High

The reactor neutron flux is monitored with the Average Power Range Monitors (APRM) of the Neutron Monitoring System (NMS System). The APRM channels provide the primary indication of neutron flux within the core and respond almost instantaneously to neutron flux increases. Above-limit values occurring on two-out-of-four channels will cause the RPS System to undergo a reactor scram. The RPS System (described in detail in Section 7.2) consists of four channels. Each RPS channel receives signals from the four APRM channels, and scram logic is based on two-out-of-four trip logic. Each APRM channel consists of the local power range monitor (LPRM) detectors, cables from under the vessel to the main control room (MCR), LPRM/APRM signal conditioning equipment, and fiber optic cables transmitting to RPS digital trip modules (DTMs) also located in the MCR.

The LPRM detectors in ESBWR are fission chambers, located in the bypass region at various core positions between fuel assemblies. The LPRM detectors are arranged at four different axial positions. The ESBWR is unique in that it uses gamma thermometers for frequently calibrating the LPRMs. The gamma thermometer contains a solid metal mass which is heated by the gamma rays generated within the reactor core. The heat generated is proportional to the specific power of adjacent fuel rods. Heat generated within the metal mass is permitted to escape to a heat sink through a controlled heat path. The temperature differential developed along that heat path is directly proportional to the rate of heating caused by the impinging gamma rays. Therefore, the temperature differential is proportional to the power generated in the adjacent fuel rods. A differential thermocouple embedded in the gamma thermometer measures the temperature differential along the controlled heat path and produces a voltage signal which is proportional to the local core power level and thus proportional to the local neutron flux.

The LPRM signals are routed through shielded cables to the LPRM/APRM signal conditioning equipment. The LPRM/APRM signal conditioning equipment, in turn, averages the voltage signals from selected LPRMs. The APRM voltage output (which is proportional to the average neutron flux in the core or the percent of rated thermal power) is then multiplexed and sent via fiber optic cables to the DTMs. The DTMs in each sensor channel compare the APRM signal to a trip setpoint value and for each channel sends a separate discrete (trip/no trip) output signal to trip logic units (TLUs) in all four divisions of trip logic. If neutron flux increases to a nominal trip setpoint of 118% in two-out-of four sensor channels monitoring neutron flux, a trip signal is sent to the scram contactors of the RPS System and a reactor scram will be initiated.

The APRM Neutron Flux-High trip prevents fuel damage or excessive reactor system pressure. This trip ensures that the minimum critical power ratio (MCPR) stays above the safety limit MCPR = 1.09 and RPV pressure stays less than the ASME Code limit.

For operation at low power, the APRM Neutron Flux-High set down function will provide a secondary scram to the SRNM Neutron Flux-High function because of the relative setpoints. With the SRNM near its high power range, it is possible that the APRM Neutron Flux-High set down function will provide the primary trip signal for a core wide increase in power. In past licensing safety analyses, direct credit for the APRM Neutron Flux-High set down function has not been taken. However, this function indirectly ensures that before the reactor mode switch is placed in the RUN position, reactor thermal power does not exceed 25% of rated when operating at low reactor pressure and low core flow. It indirectly prevents fuel damage during significant reactivity increases with thermal power less than 25% of rated.

2.8.2.2 Simulated Thermal Power-High

The APRM Simulated Thermal Power-High function is part of the NMS System. The APRM Simulated Thermal Power-High function monitors neutron flux to approximate the thermal power being transferred to the reactor coolant by the fuel. The APRM Simulated Thermal Power-High function in ESBWR is not flow-biased since this plant is a natural circulating reactor and core flow is a function of power. The APRM neutron flux is electronically filtered with a 6-second time constant representative of the fuel heat transfer dynamics to generate a signal proportional to the thermal power in the reactor. The signal is fixed at an upper limit which is always lower than the APRM Neutron Flux-High function setpoint. The APRM Simulated Thermal Power-High function provides protection against transients where thermal power increases slowly (such as a Loss of Feedwater Heating event) and protects the fuel clad integrity by ensuring the MCPR Safety Limit is not exceeded. During these events, the thermal power increase does not significantly lag the neutron flux response and, because of a lower trip setpoint, will initiate a scram before the high neutron flux scram. For events where neutron flux increases rapidly, the thermal power lags the neutron flux and the APRM Neutron Flux-High function will provide a scram signal before the APRM Simulated Thermal Power-High function setpoint is exceeded. This signal closely approximates the average thermal power during transients and steady state conditions and thereby makes the NMS System less susceptible to flux spikes than it would be with the APRM Neutron Flux-High function alone. APRM Simulated Thermal Power-High scram is designed to make ESBWR less susceptible to scrams during operation caused by spurious momentary neutron flux spikes.

2.8.2.3 Source Range Neutron Monitoring (SRNM)-High

The SRNM subsystem of the NMS System will generate a scram trip signal to prevent fuel damage in the event of any abnormal positive reactivity insertion transients while operating in the startup power range. This trip signal will be generated for either an excessively high neutron flux level or for an excessive neutron flux increase rate, i.e., short reactor period. The setpoints of these trips are determined such that under the worst positive reactivity insertion event, fuel integrity is always protected. The worst bypass or out of service condition of the SRNM subsystem is considered in determining the setpoints. In the startup power range, the most significant source of positive reactivity change is due to control rod withdrawal. The SRNM provides diverse protection for the Rod Worth Minimizer (RWM) in the Rod Control and Instrumentation System (RC&IS System) which monitors and controls the movement of control rods at low power. The RWM prevents the withdrawal of an out-of-sequence control rod during startup that could result in an unacceptable neutron flux excursion. The SRNM provides mitigation of the neutron flux excursion. The SRNMs are also capable of limiting other reactivity excursions during startup such as cold water injection events although no credit has been specifically assumed in past licensing calculations.

SRNM-Inop Trip - This trip signal provides assurance that a minimum number of SRNMs are operable. Anytime a SRNM detector voltage drops below a preset level, or when one of the modules is not plugged in, an inoperative trip signal will be received by the RPS System unless the SRNM is bypassed. Since any inoperative SRNM will result in a trip of that division and that divisional trip signal is sent to all four RPS divisions, any unbypassed inoperative SRNM will result in a half-trip condition to each of the RPS divisions, i.e., satisfying half of the two-out-of-four logic. This function has not been specifically credited in past licensing calculations but it is retained for the overall redundancy and diversity of the RPS System as required by the NRC approved licensing basis.

2.8.3 RPV Water Level Trip Setpoints

2.8.3.1 RPV Water Level-Level 9

RPV Water Level-Level 9 initiates a trip of the feedwater pumps to protect the main turbine from damage as a result of moisture carry-over in the main steam. This trip prevents RPV overfill as a result of a feedwater controller malfunction.

2.8.3.2 RPV Water Level-Level 8

A Level 8 trip signal indicates that the water level in the RPV has increased and protective actions are initiated to prevent further vessel overfill. The trip signal is selected low enough to protect the turbine against gross carryover of moisture and to provide adequate core thermal margins during abnormal events. Actions initiated by this signal are a reactor scram via RPS, main turbine trip, termination of the CRDS System High Pressure makeup mode, and a run-back of feedwater demand to zero.

The Level 8 signals are generated from two different reactor water level measurement systems. These systems are the **narrow range system** which has a range of approximately 1.6 m (approximately Level 3 to Level 8) and the **wide range system** which has a range of 9.9 m (approximately top of the active fuel to above Level 8).

High RPV water level indicates a potential problem with the feedwater level control system, resulting in the addition of reactivity associated with the introduction of a significant amount of relatively cold feedwater. Therefore, a scram is initiated at Level 8 to ensure that MCPR is maintained above the MCPR Safety Limit. The RPV Water Level-Level 8 function is one of the many functions assumed to be capable of providing a reactor scram during transients. It has been directly assumed in past licensing analysis of feedwater controller failure - maximum demand.

2.8.3.3 RPV Water Level-Level 3

A RPV Water Level-Level 3 trip indicates that the water level in the reactor has dropped, and a continued decrease in level would cause steam to bypass the seal skirts of the separators. This is indicative of a significant problem with the level control system or reactor feedwater system. Level 3 indicates that the capability to cool the fuel may be threatened. Should RPV water level decrease too far, fuel damage could result. Under these circumstances, a reactor scram is initiated by a Level 3 RPS trip to substantially reduce the heat generated in the fuel from fission and reduce steam production. The RWCU/SDC System's pumps run back and the system isolation valves are closed and the Leak Detection and Isolation System (LD&IS System) is initiated. The Level 3 trip also serves as a permissive signal for the initiation of ADS to allow activation of the ESBWR ECCS network.

The RPV Water Level-Level 3 function has been assumed in past licensing analysis of loss of feedwater. The reactor scram reduces the amount of energy required to be absorbed and, along with the actions of the ECCS, assures that the fuel peak cladding temperature remains below the limits of 10CFR50.46.

2.8.3.4 RPV Water Level-Level 2

RPV Water Level-Level 2 indicates a LOCA is occurring and with the associated water level drop, the capability to cool the fuel may be threatened. Should RPV water level decrease too far, fuel damage could result. The Main Steam Line Isolation Valves (MSIVs) and all valves whose penetrations communicate with the containment are isolated to limit the potential for release of fission-products. Other functions that are initiated by the Level 2 trip are an initiation of Alternate Rod Insert (ARI), an initiation of the CRDS System's high pressure makeup mode, a joint ADS inhibit -plus- SLCS initiation with a concurrent "APRM Not Downscale" signal, and an isolation of the Reactor Building HVAC/Refueling Area Exhaust in order to minimize the potential of an off-site dose release. The isolation of the containment on Level 2 supports actions to ensure that off-site dose limits of 10CFR100 are not exceeded. The Level 2 function associated with containment isolation has been implicitly assumed in past licensing analysis since these leakage paths are assumed to be isolated post-LOCA. The Level 2 function is one of the functions assumed to be operable and capable of providing isolation and initiation signals.

The Reactor Building HVAC isolation on Level 2 supports actions to ensure any off-site releases are within the limits.

The Level 2 setpoint is set high enough that the CRDS System, in its high pressure makeup mode, can mitigate the consequences of a LOCA from a small line break. The Level 2 setpoint is low enough that the level collapse following a scram caused by a Level 3 trip, with no loss of feedwater flow, will not reach Level 1 (which would initiate ADS, GDCS and PCCS drain tank squib valves).

2.8.3.5 RPV Water Level-Level 1

RPV Water Level-Level 1 is used to generate initiation signals for ECCS. Under postulated LOCA conditions that could result in abnormally low vessel water levels, fuel cladding integrity must be assured. The Level 1 trip signal is set high enough to allow the RPV to be depressurized by the ADS Subsystem and for the GDCS System to initiate and flood the vessel prior to any fuel becoming uncovered. The Level 1 setpoint is low enough that decreases in level resulting from operational transients will not reach it.

In the event of a large break, RPV level rapidly decreases to Level 1 and initiates RPV depressurization by ADS and initiates GDCS and PCCS logic which, after a prespecified time delay, will activate squib valves to begin system flow into the RPV. Level 1 also initiates a trip of the LD&IS System which sends a backup closure signal to all containment isolation valves (including the MSIVs), disconnects non-Class 1E equipment connected to Class 1E power sources, and provides an initiation signal to start the Standby AC Power Supply System (2 standby non-safety related AC diesel generators or combustion gas turbines). The Safety System & Logic Control System (SSLCS System) receives the signals necessary for initiation from this function. RPV Water Level-Level 1 is one of the functions that is assumed to be operable and capable of initiating the reactor depressurization by the ADS Subsystem's safety-relief valves (SRVs) and depressurization valves (DPVs), and to initiate GDCS System injection into the depressurized RPV, in design basis LOCA licensing analyses. The core cooling function of the ECCS, along with the scram action of the RPS System, assures that the fuel peak cladding temperature remains below the limits of 10CFR50. 46.

2.8.3.6 RPV Water Level-Level 0.5

RPV Water Level-Level 0.5 trip setpoint is used to generated signals to initiate GDCS System long term cooling of the RPV following a LOCA. Level 0.5 indicates that RPV level has dropped following a LOCA to 1 meter above the top of active fuel (TAF) and the fuel is in danger of becoming uncovered. This level signal, in conjunction with the time-out of a 30-minute time delay in the GDCS logic initiated by a Level 1 signal, will open a flow path between the suppression pool and the RPV to prevent core uncovery and to initiate long term core cooling.

2.8.4 RPV/Containment Pressure/Temperature Trip Setpoints

2.8.4.1 Reactor Pressure-High

The reactor vessel pressure must be maintained within the limits prescribed by the ASME Boiler & Pressure Vessel Code, Section III. If pressure rises to a preset high value, a trip signal to the RPS System will initiate a reactor scram to shutdown nuclear heat generation. Reactor scram is initiated by high pressure if other signals have failed to scram the reactor to limit the effect of positive pressure on reactor power and provide assurance that reactor vessel integrity will be maintained.

An increase in the RPV pressure during reactor operation compresses the steam voids and results in a positive reactivity insertion. This causes the neutron flux and thermal power transferred to the reactor coolant to increase which could challenge the integrity of the fuel cladding and the integrity of the RCPB. The Reactor Pressure-High function initiates a scram for any transients producing a pressure increase, thus counteracting the pressure increase by rapidly reducing core power. If reactor pressure remains above certain values for a predetermined time period (measured in seconds), the Isolation Condenser System is actuated, which acts to keep RPV pressure below setpoint pressures at which SRVs will open.

2.8.4.2 Drywell Pressure-High

The ESBWR drywell is the enclosure designed to withstand the expected peak transient pressure that could result from the worst-case postulated LOCA and is one of the barriers that prevents radioactive release to the environment. During a severe accident the containment must maintain its integrity.

The ESBWR containment, during normal operation, is inerted with nitrogen and maintained close to atmospheric pressure. An increase in drywell pressure above the Drywell Pressure-High setpoint would indicate a LOCA and the trip signal initiates a reactor scram. The transmitters monitoring high drywell pressure also provide input to the ADS Subsystem in conjunction with transmitters monitoring high suppression pool temperature to initiate a via the SRV's and ADS Squib Valves blowdown of the RPV if the suppression pool temperature and drywell pressure exceed predetermined setpoints. This ensures that the suppression pool has sufficient heat capacity remaining to handle the RPV blowdown energy in the event of a small line break.

High pressure in the drywell is indicative of a break in the RCPB. A reactor scram is initiated to minimize the possibility of fuel damage and to reduce the amount of energy being added to the coolant and to the drywell. The Drywell Pressure-High scram function is a secondary scram signal to RPV Water Level-Level 3, for LOCA events inside the drywell. This function has not been specifically credited in past accident analyses but it is retained for the overall redundancy and diversity of the RPS System as required by the NRC approved licensing basis.

2.8.4.3 Lower Drywell Temperature-High

Sensors are provided in the lower drywell region of ESBWR that monitor lower drywell temperature. These sensors provide input to the RPS System to automatically trip the reactor when a high lower drywell temperature setpoint is reached. These thermocouples in the lower drywell detect excessive loss of coolant and provide protection for safety-related equipment.

2.8.4.4 Suppression Pool Temperature-High

High temperature in the suppression pool could indicate a break in the RCPB, a leak through the SRVs, or a stuck-open SRV(s). A reactor scram is initiated to reduce the amount of energy being added to the containment and to ensure that the suppression pool has sufficient heat capacity to accommodate the RPV blowdown energy in the event that the RPV must be depressurized. Credit has been taken for the Suppression Pool Temperature-High function in past licensing analyses of an inadvertent opening of an SRV.

2.8.4.5 MSIV-Closure

MSIV closure results in loss of the main turbine and the condenser as a heat sink for the nuclear steam supply system and indicates a need to shut down the reactor to reduce heat generation. Therefore, a reactor scram is initiated on an MSIV-Closure signal before the MSIVs are completely closed in anticipation of the complete loss of the normal heat sink and subsequent overpressurization transient. Reactor pressure rises when the valves close, causing an increase in reactor power. The reactor scram reduces the amount of energy required to be absorbed and, along with the actions of the Isolation Condenser System (ICS), assures that the fuel peak cladding temperature remains below the limits of 10CFR50.46.

Position sensors mounted on the MSIVs provide timely signals used to initiate scram to limit the resulting pressure rise and reduce the severity of the transient.

Various steam line and nuclear system malfunctions or operator actions can initiate an MSIV Closure event. In ESBWR the following signals will initiate an MSIV Closure through LD&IS System actions:

- Main condenser vacuum-low;
- Turbine area ambient temperature-high;
- Main steam line tunnel ambient temperature-high;
- Main steam line flow rate-high;
- Turbine inlet pressure-low [AND reactor mode switch in RUN};
- RPV water level -Level 1 OR -Level 2.

2.8.5 Turbine/Generator Trip Setpoints

2.8.5.1 Turbine Stop Valve Closure

Turbine Stop Valve (TSV) Closure, as sensed by turbine stop valve sensors, initiates an RPS scram of the reactor, excepting when reactor power level is below 40% nuclear boiler rated (NBR). The purpose of the TSV position sensors are to provide timely signals that are indicative of the closing action (not fully open condition) of the turbine stop valves.

Turbine trip events require closure of the turbine stop valves in order to prevent damage to the turbine that could result from various abnormal conditions. Turbine protection devices, therefore, initiate the closure of the turbine stop valves upon detection of turbine or generator malfunction. Table 2.8-3 identifies 19 expected ESBWR main turbine protective trips. The final list of main turbine protective trips will not be finalized until ESBWR has undergone detailed design.

Reactor protection is required in order to mitigate the consequences of the ensuing reactor pressurization transient. The required timing of reactor protection is dependent upon the reactor power level at the time the turbine stop valves are closed, and upon the sizing and operability of the turbine steam bypass system. At low reactor power, the reactor pressure transient is usually small, since steam flow from the reactor is diverted to the turbine bypass system when the turbine stop valves are closed, and no reactor shutdown or scram may be needed. When TSV closure occurs at high reactor power, the reactor pressurization transient is very rapid, and reactor scram must be initiated earlier in the event to maintain required fuel and RCPB safety margins.

2.8.5.2 Turbine Control Fast Valve Closure

Turbine control valve fast closure, as sensed by turbine control valve fast closure sensors, initiates an RPS scram of the reactor, excepting when reactor power level is below 40% NBR. The purpose of the turbine control valve fast closure sensors are to provide timely signals that are indicative of the imminent or actual start of fast closure of the turbine control valves.

Generator load rejections require closure of the turbine control valves in order to prevent damage to the turbine that could result from excessive turbine acceleration or turbine over speed. Therefore, turbine protection devices initiate the fast closure of the turbine control valves upon detection of a significant imbalance between the electrical power being generated and the actual load on the generator. For events where a full turbine trip is required, turbine protection devices usually initiate fast closure of not only the turbine control valves but also the turbine stop valves.

Reactor protection is required in order to mitigate the consequences of the ensuing reactor pressurization transient. The pressurization transient is very similar to that expected as a result of turbine stop valve closure and the required timing of the RPS System action is also dependent upon the reactor power level at the time the turbine control valves are fast closed, and upon the sizing and operability of the turbine steam bypass system. At low reactor power, the reactor pressure transient is usually small, as steam flow from the reactor is diverted to the turbine

bypass system when the turbine control valves are closed, and no reactor shutdown or scram may be needed. When turbine control valve fast closures occur at high reactor power levels, the reactor pressurization transient is very rapid, and reactor scram must be initiated earlier in the event to maintain required fuel and RCPB safety margins.

Different turbine protection and control designs by the various turbine vendors, and different designs by even the same vendor, have resulted in several different sensing methods to generate the signal indicating that fast closure of the turbine control valves has occurred or will occur. The most common method is to use pressure switches which monitor control valve trip system hydraulic oil pressure for the individual valves. Other methods are to monitor electrical signals generated by the turbine protection system itself, or to monitor the pressure of the control oil from the control valve servos. The sensing method to be used on ESBWR has yet to be determined.

2.8.6 Miscellaneous Trip Setpoints

2.8.6.1 HCU Charging Water Line Pressure-Low

To maintain the continuous ability to scram the reactor, the charging water header maintains the hydraulic scram accumulators at a high pressure. The scram valves under this condition remain closed, so that no flow passes through the charging water header. Pressure in the charging water header is monitored. The HCU Charging Water Line Pressure-Low function initiates a scram if a significant degradation in the charging water header pressure occurs. During a scram, the water discharge from the accumulators goes into the reactor, and thus is subject to reactor pressure. Therefore, fully charged HCUs are essential for assuring reactor scram. After a reactor scram, this function can be bypassed from the operator's console to reset the RPS, allowing the scram valves to close and the HCUs to be repressurized.

2.8.6.2 Mode Switch in Shutdown

A multi-function, multi-bank, keylock-type control switch placed near the plant operator at the main control console provides mode selection for all necessary interlocks associated with various plant operations. The modes of ESBWR plant operation are SHUTDOWN, REFUEL, STARTUP, and RUN. If the mode switch is placed in the SHUTDOWN position, contacts open which results in a scram initiating signal for 10 seconds independent of the conditions within other RPS equipment. The reactor mode switch, along with the two manual scram switches, provides a redundant means to manually initiate a reactor scram.

2.8.6.3 Manual Scram

Two manual scram switches permit initiating a scram independent of the conditions within other RPS equipment (sensor channels, divisions of trip logic, or divisions of trip actuators). Each manual scram switch is associated with one of the two divisions of actuator load power. Both manual switches are located at the main control console. When a manual scram switch is depressed, contacts open which result in a scram initiating signal as long as the switch is held in

the "Trip" position. The open contacts disconnect power sources to the scram pilot valve solenoids.

2.8.7 Isolation Trip Setpoints

2.8.7.1 Leak Detection

The primary function of the LD&IS System is to monitor leakage sources from the RCPB, and automatically initiate closure of the appropriate isolation valves to isolate the source of the leak if monitored system variables exceed preset limits. This action limits the loss of coolant from the RCPB and the release of radioactive materials to the environment.

The nominal LD&IS trip setpoints for ESBWR remain to be defined. This will be done as part of the detailed design process.

2.8.7.2 Main Steam Line Ambient Temperature-High

The Main Steam Line Ambient Temperature-High trip setpoint is provided to detect a leak in the RCPB and provides diversity to the main steam line high steam flow instrumentation. The main steam line isolation occurs when a very small leak has occurred. If the small leak is allowed to continue without isolation, off-site dose limits may be reached. However, credit for these instruments has not been taken in any transient or accident analyses in past licensing calculations because Main Steam Flow-High is more limiting for off-site doses. Ambient temperature signals are initiated from thermocouples located in the main steam tunnel. The Main Steam Line Ambient Temperature-High function will isolate the MSIVs and RWCU/SDCS System isolation valves. A reactor scram is initiated off of the position switches on the MSIVs whenever a sufficient number of MSIVs close.

2.8.7.3 Main Steam Line Flow-High

The flow in the main steam lines (MSLs) is monitored by four differential pressure transmitters, which measure the pressure drop across a venturi type flow element built into the forged RPV MSL nozzles.

The flow element serves a dual purpose. It serves as the primary element for the measurement of flow, and it is designed to limit the maximum outflow resulting from a postulated guillotine break in a given MSL, to a flow of 200% or less of rated mass flow. This choked flow rate is the Design Safety Limit.

Main Steam Line Flow-High is provided to detect a break of the MSL and to initiate closure of the MSIVs. If the steam were allowed to continue flowing out the break, the reactor would depressurize and the core could uncover. If the RPV water level decreases too far, fuel damage could occur. Therefore, the isolation is initiated on high flow to prevent or minimize inventory loss and core damage. The Main Steam Line Flow-High function has been directly assumed in past licensing analyses of the MSL break. The isolation action, along with the scram function of

the RPS, assures that the fuel peak cladding temperature remains below the limits of 10CFR50.46 and off-site doses do not exceed the 10CFR100 limits.

2.8.7.4 Turbine Inlet Pressure-Low

The Turbine Inlet Pressure-Low closure of the MSIVs is provided to protect the reactor system against uncontrolled depressurization. Protection is provided primarily against a pressure regulator malfunction which results in the turbine control and/or bypass valves opening. The Turbine Inlet Pressure-Low trip setpoint is specified to limit the duration and severity of the depressurization so that thermal stresses remain below the appropriate safety limit and inventory loss is limited to prevent uncovering the fuel.

Low MSL pressure indicates that there may be a problem with the turbine pressure regulation which could result in a condition that the RPV is cooling down more than 55°C/hr (100°F/hr) if the pressure loss is allowed to continue. The Main Steam Line Pressure-Low function has been directly assumed in past licensing analyses of the pressure regulator failure. For this event the closure of the MSIVs ensures that the RPV temperature change limit of 55°C/hr is not reached. In addition, this function supports actions to ensure Safety Limits are not exceeded. This function closes the MSIVs prior to pressure decreasing below 5.412 MPa gauge , which results in a scram due to MSIV closure, thus reducing reactor power to < 25% nuclear boiler rated (NBR) power. The main steam line low pressure signals are initiated from four transmitters that are connected to the main steam line header. The setpoint has been selected to be high enough to prevent excessive RPV depressurization.

This MSIV Closure function is bypassed with the reactor mode switch not in RUN position.

2.8.7.5 Turbine Area Steam Line Ambient Temperature-High

Turbine Area Steam Line Ambient Temperature-High is provided to detect a leak in the RCPB and provides diversity to the high main steam line flow instrumentation. The isolation occurs when a very small leak has occurred. If the small leak is allowed to continue without isolation, off-site dose limits may be reached. However, credit for these instruments has not been taken in any past licensing transient or accident analyses because Main Steam Flow-High is more limiting for off-site doses. Ambient turbine building temperature signals are received from thermocouples located in the area of the turbine building near the MSLs. The Turbine Area Steam Line Ambient Temperature-High function will isolate the MSIVs and drain valves.

2.8.7.6 Main Condenser Vacuum-Low

The Main Condenser Vacuum-Low isolation is provided to prevent overpressurization of the main condenser in the event of a loss of main condenser vacuum. Since the integrity of the condenser is an assumption in offsite dose calculations, the Main Condenser Vacuum-Low isolation is assumed to be operable and capable of initiating closure of the MSIVs during normal power operation. The initial reduction in vacuum results in a trip of the main turbine which in turn causes a reactor scram. Further reduction in condenser vacuum to the MSIV closure trip setpoint results in closure of the MSIVs and also in closure--initiated by separate non-Class 1E

sensors--of the turbine bypass valves. The closure of the MSIVs is initiated to prevent the addition of steam that would lead to additional condenser pressurization and possible rupture of the diaphragm installed to protect the turbine exhaust hood, thereby preventing a potential radiation leakage path following an accident. Main condenser vacuum pressure signals are derived from four pressure transmitters which sense the pressure in the main condenser. The setpoint is chosen to prevent damage to the condenser due to pressurization, thereby ensuring its integrity for off-site dose analysis.

Table 2.8-1 ESBWR Protective and Engineered Safeguards

		Isolation		Pressure Relief			
Signal	**Scram**	**Containment**	**System**	**SRV**	**ADS**	**GDCS**	**IC**
Neutron Flux Setpoints							
1) Neutron Flux- a) High (in RUN) b) Set down (in STARTUP)	 I I						
2) Thermal Power-High	I						
3) SRNM (with mode switch other than RUN) a) High b) Short period c) Inop	 I I						
RPV Water Level Setpoints							
1) Level 9			I - Trips FW pumps				I
2) Level 8	I		I - Trip Turbine, runback FW, trip CRDS pumps				
3) Level 3			I				
4) Level 2	I		I - Closes MSIVs, initiates CRDS pump runout				

Table 2.8-1 ESBWR Protective and Engineered Safeguards (cont'd)

		Isolation		Pressure Relief			
Signal	**Scram**	**Containment**	**System**	**SRV**	**ADS**	**GDCS**	**IC**
5) Level 1		I		I-(in conjunction with ADS)	I	I - Logic initiated	
6) Level 0.5						I - Long term cooling initiated	
RPV/Containment Setpoints							
1) Reactor Pressure-High	I			I			I
2) Drywell Pressure-High	I	I					
3) Lower Drywell Temperature-High	I						
4) Suppression Pool Temperature-High	I		I - Initiates S/P cooling				
5) MSIV-Closure (with mode switch in RUN)	I						I
Turbine/Generator Setpoints							
1) Turbine Stop Valve Closure	I						
2) Turbine Control Valve Closure	I						

Table 2.8-1 ESBWR Protective and Engineered Safeguards (cont'd)

	Isolation			Pressure Relief			
Signal	**Scram**	**Containment**	**System**	**SRV**	**ADS**	**GDCS**	**IC**
Miscellaneous Setpoints							
1) HCU Charging Water Line Pressure Low (1)	I						
2) Mode Switch to Shutdown	I						
3) Manual Scram	I						
Isolations							
1) Leak Detection			I				
2) Main Steam Line Ambient Temperature-High			I - Close MSIVs				
3) Main Steam Line Flow-High			I - Close MSIVs				
4) Turbine Inlet Pressure-Low (with mode switch in RUN)			I - Close MSIVs				
5) Turbine Area Steam Line Ambient Temperature-High			I - Close MSIVs				
6) Main Condenser Vacuum-Low			I - Close MSIVs,				

Notes: I = Initiates Function

1) With mode switch in STARTUP or RUN, or mode switch not in STARTUP or RUN and trip not bypassed

Table 2.8-2 Nominal ESBWR NSSS Setpoints

Signal	Preliminary Allowable Value	Comments
Neutron Flux Setpoints		
1) Neutron Flux a) High (mode switch in RUN) b) Set down (mode switch in STARTUP)	118% RTP 13.6% RTP	RTP = Reactor Thermal Power
2) Thermal Power-High	> 113% RTP	
3) SRNM (with mode switch other than RUN) a) Neutron Flux-High b) Neutron Flux-Short Period c) Inop	> 45% RTP < 11 seconds NA	
RPV Water Level Setpoints		
1) Level 9	(Later)	
2) Level 8	(Later)	
3) Level 3	(Later)	
4) Level 2	(Later)	
5) Level 1	(Later)	
6) Level 0.5	7493 mm	Referenced with respect to RPV Elevation 0
RPV/Containment Setpoints		
1) Reactor Pressure-High	7.52 MPa	From PTs monitoring RPV dome pressure
2) Drywell Pressure-High	12.7 kPa	
3) Lower Drywell Temperature-High	(Later)	
4) Suppression Pool Temperature-High	48.9° C	
5) MSIV-Closure (with mode switch in RUN)	92% Open	
Turbine/Generator Setpoints		
1) Turbine Stop Valve Closure	~ 92.4%	% of full open valve position
2) Turbine Control Valve Closure	~ 3.1 MPa	Referenced to valve trip system oil pressure

Table 2.8-2 Nominal ESBWR NSSS Setpoints

Signal	Preliminary Allowable Value	Comments
Miscellaneous Setpoints		
1) HCU Charging Water Line Pressure Low (1) a) Power Operation & Startup b) Refueling	~ 12.7 MPa	From PTs on HCU charging water line. Normal operating pressure ~ 14.7 MPa
2) Mode Switch in Shutdown	NA	
3) Manual Scram	NA	
Isolations		
1) Leak Detection	(Later)	
2) Main Steam Line Ambient Temperature-High	~ 27.8° C above ambient	
3) Main Steam Line Flow-High	200% of Rated	
4) Turbine Inlet Pressure-Low (with mode switch in RUN)	< 5.4 MPa	
5) Turbine Area Steam Line Ambient Temperature-High	~ 57° C in vicinity of control valves	
6) Main Condenser Vacuum-Low	~ 32.8 kPa	

Table 2.8-3 Preliminary Main Turbine Protective Trips

Preliminary Turbine Trips	Typical Setpoint Value
1. Condenser Low Vacuum	~ 32.8 kPa
2. Thrust Bearing Wear	+ 0.9 mm
3. Low Lube Oil Pressure	~ 55 kPa
4. Low Fast Acting Solenoid Oil Pressure	~7.6 MPa
5. High Exhaust Hood Temperature	~107° C
6. Loss of Generator Stator Cooling and Failure to Run Back: a. In 2 minutes to b. In 3.5 minutes to	~ 90 kPa inlet pressure or ~ 35° C outlet temperature < 80% of rated < 25% of rated
7. High Vibration	~ 0.3 mm
8. Loss of Turbine Speed Indication Signal	NA
9. Main Shaft Pump Discharge Pressure Low	~ 724 kPa at > 1300 rpm
10. Loss of 125 VDC Control Power	NA
11. Moisture Separator Drain Tank High Level	(Later)
12. RPV Water Level-Level 8	(Later)
13. Generator, Transformer and Output Breaker Fault	Unit Protection Relay Trip
14. Backup Overspeed Trip	~ 111.5 %
15. Low Emergency Trip System Pressure	~ 5.5 MPa
16. Remote Manual Trip from MCR	NA
17. Circulating Water System Trip	Less than 3 Circ. Pumps Running
18. Electrical Overspeed Trip	~ 110%
19. Local Mechanical Trip Lever Actuated	NA

3. Key Nuclear Island Mechanical Systems Description

3.1 Nuclear Boiler System

3.1.1 Description and Functioning of System

The Nuclear Boiler System (NBS) is a set of subsystems that in a certain sense manages the "global" performance of the reactor pressure vessel (RPV) so as to both link and facilitate the power generation operations of the core plus reactor internals (steam separators, dryers) in serving the eventual needs to convey and deliver steam to the plant turbine-generator. The NBS System includes the four main steamlines connecting the reactor to the turbine-generator, and includes the main steam isolation valves (MSIVs) that provide capability to rapidly isolate the nuclear steam supply system (NSSS). For the limited purposes of this ESBWR product description, the reactor feedpumps, high pressure heaters, and the twin feedwater lines bringing feedwater into the containment are also classified as part of the NBS System. The NBS System's function includes the requirements for achieving proper distribution of feedwater returning into the reactor, and for relieving excess steam beyond amounts which the Isolation Condenser System (ICS) can handle during certain transients postulated to occur only infrequently over plant lifetime. The NBS System's functions further include those of sensing reactor water levels so that various trip signals can be generated if reactor water level moves above or below planned limits. The NBS System includes as one of its principal subsystems the Auto-depressurization Subsystem (ADS Subsystem). The auto-depressurization subsystem consists of a set of conventional safety-relief type valves (SRVs) and associated discharge lines that are terminated with quenchers located in the suppression pool. In addition, the auto-depressurization subsystem consists of a back-up set of squib-type pyrotechnic-actuated depressurization valves (DPVs) that when opened achieve reactor depressurization by discharging steam directly into the drywell.

In the description of the NBS System, it is perhaps easiest to deal with these individual subsystems, one at a time, in later subsections. Also, brief descriptions of certain turbine island main steam supply portions are provided below, to aid in obtaining a fuller overview of the reference power generation cycle design for the ESBWR.

3.1.2 Design Bases

3.1.2.1 Safety Design Bases

The NBS System shall provide a pair of redundant MSIVs in each main steamline to achieve rapid containment isolation of these lines and thus limit release of reactor coolant and limit radiation release to the environment.

- The NBS System shall provide flow restrictors built-in to the forged nozzles where the main steamlines connect to the RPV so as to further limit initial steam line flows and reactor depressurization rate, under postulated accident conditions of a steam line rupture outside the drywell, throughout the early portion of the closure stroke of the MSIVs until critical flow is established through the disk-and-seat region of the respective closing MSIVs.

- The NBS System shall provide overpressure protection for the reactor coolant pressure boundary (RCPB) by means of a sufficient number of rapid-opening power-actuated plus spring-safety-type SRVs. The SRVs shall be distributed among the main steamlines in such assignments as to avoid choking of the flow at locations upstream of these valves that vent steam from the RPV at rates governed by the challenge event known as an Anticipated Transient Without Scram (ATWS). In accomplishing steam ventings, such discharges shall be directed to the suppression pool via discharge lines terminating in steam quenchers. These quenchers induce minimum dynamic loadings on suppression pool boundaries and achieve full condensation of the discharged steam in the suppression pool.

- The NBS System shall provide the capability of depressurizing the RPV automatically at rates within specified maximum and specified minimum depressurization time-histories as determined by qualified computer-code-based design basis accident analyses, via appropriate time-staggered openings of the SRVs, together with time-staggered openings of the DPVs, in the event of a Loss-of-Coolant Accident (LOCA).

- The set of DPVs of the NBS System shall, following actuation in response to a LOCA, provide for a permanently depressurized state of the RPV relative to drywell pressure, such that coolant inflows to the reactor from the Gravity-Driven Cooling System (GDCS System) short-term injection subsystem. In addition the depressurized state shall assure coolant inflows, developed from the condensate produced by the Passive Containment Cooling System (PCCS System) condensers and/or coolant inflows from the GDCS long-term injection subsystem which brings coolant from suppression pool into the RPV, are not significantly inhibited by virtue of excessive pressure differential as decay-heat produced steam vents from the RPV dome to the drywell. The design shall assure there are no water-traps existing in the vent pathways through the DPVs and their associated upstream connections to the steam dome nor through their downstream connections to the point of discharge in the drywell.

- The NBS System shall provide instrumentation to monitor the reactor coolant system pressure, RPV water level, MSIV position, and SRV position during normal operations and accident conditions.

3.1.2.2 Plant Investment Protection Design Bases

- The NBS System shall transport steam from the RPV to the main turbine stop valves and to the turbine bypass valves, the moisture separator/reheaters, the steam jet air ejectors, the turbine gland seal system, and the main condenser for deaerating.

- The NBS System shall provide means for accurately measuring total steam flow rate leaving the RPV through the group of four steamline nozzles.

- The NBS System shall drain condensate from the main steamlines and permit equalizing pressure across the MSIVs prior to system restart following a steam line isolation. Drain flows shall be directed to the main condenser.

- The NBS System shall provide capability to vent the uppermost region of the RPV steam dome into the drywell equipment (clean radwaste) sump so as to achieve vacuum breaking when (a) following reactor shutdown the reactor is being cooled to nominally 60°C temperatures and below, and (b) during shutdown after hydrotest as water level in the RPV is being returned to normal levels.
- The NBS System shall provide capability to vent noncondensable gases that may accumulate in the RPV head space during reactor power generation operations.
- The NBS System shall provide instrumentation to monitor the RPV metal temperature and to confirm operational status and/or the existence of leakage in the SRV discharge piping, the main steamline bypass/drain lines, and RPV head vent piping.
- The NBS System shall provide steam bypass capability via the Turbine Bypass System (TBS) for startup, shutdown and step-load reduction transients.
- The NBS System shall provide via the Feedwater System, a return flow pathway into the RPV both for makeup coolant supplied by the Control Rod Drive System (CRD System) under transients (including complete failure of offsite ac power) as well as accident events when the reactor remains pressurized. The NBS System shall provide a return path also via the feedwater, for coolant supplied by the Fuel & Auxiliary Pools Cooling System (FAPCS System) when following operation of the ADS Subsystem the reactor has become substantially depressurized.

3.1.3 Main Steam Lines Subsystem

The main steam lines subsystem of the NBS System and its turbine-island associated systems/ subsystems accepts steam from the RPV. The steam flows through the RPV main steam outlet nozzles/flow restrictors, the main steamlines, and the MSIVs. Downstream of the outboard MSIVs, the steam is routed to the turbine-generator. The main steamline subsystem is composed of several components and subsystems, in addition to the above, which are necessary for proper operation of the reactor under various operating, shutdown and accident conditions. Among others, these related components and subsystems include the main steam bypass/drain subsystem, SRVs including SRV discharge pipelines and quenchers, DPVs, the ADS Subsystem, the reactor head vent subsystem, and system instrumentation.

The main steamline subsystem features four main steamlines that are routed from the RPV through the MSIVs out to the turbine stop valves. The use of four such large lines keeps individual pipeline steam velocities limited to 47.5 m/sec or less at full power steady-state operating conditions. These velocities are well below values at which any of the following adverse conditions might develop:

- accelerated corrosion/erosion rates on internal surfaces and/or at bends or flow restrictions
- unnecessarily high irreversible pressure drop losses that reduce live steam pressure at the turbine

- unacceptably high steam-hammers resulting from sudden closure of turbine stop valves.

The use of four main steamlines also permits periodic MSIV testing with a minimum effect on plant operation.

The main steamlines are principally seamless carbon steel (SA 333, Grade 6), 700 mm (nominal outside diameter, and minimum wall thickness as calculated per ASME Code Section III. For certain main steamline subsystem components, a low-alloy steel that exhibits high resistance to flow-accelerated-corrosion (FAC) will be used where justified by particular combinations of moisture, velocity, and hours-of-service projected over plant lifetime. The portion of the main steamlines from the RPV steam outlet nozzles out to and including the outboard MSIVs is designed to ASME Code Section III, Class 1, and Seismic Category I. The portion of the main steamlines from the outlet of the outboard MSIVs to the turbine stop valves is designed to ASME Code Section III, Class 2, and Seismic Category I.

There are no pressure retaining welds in portions of piping which pass through guard pipes in the containment penetrations; this design feature does away with an otherwise potentially difficult ISI inspection.

A main steamline flow restrictor is provided in each main steam outlet RPV nozzle. Refer to Figure 3.1-1. This flow restrictor is designed to limit the coolant blowdown through that line to a “choke” flow rate $\leq$ 200% of pipeline NBR (nuclear boiler rated) steam flow in the event of a guillotine break occurring in that main steamline downstream of the outboard MSIV. This limitation on flow rate thus assists in limiting the maximum accident-produced pressure differences that can be developed across reactor internal components. These flow restrictors, in conjunction with the fast-closing MSIVs, also limit the elevations attained by two-phase level swell inside the RPV during design basis LOCAs, which if too high would result in liquid mass being carried out these nozzles along with the blowdown steam flow. The flow restrictors produce negligible increase in steam moisture content during normal operation.

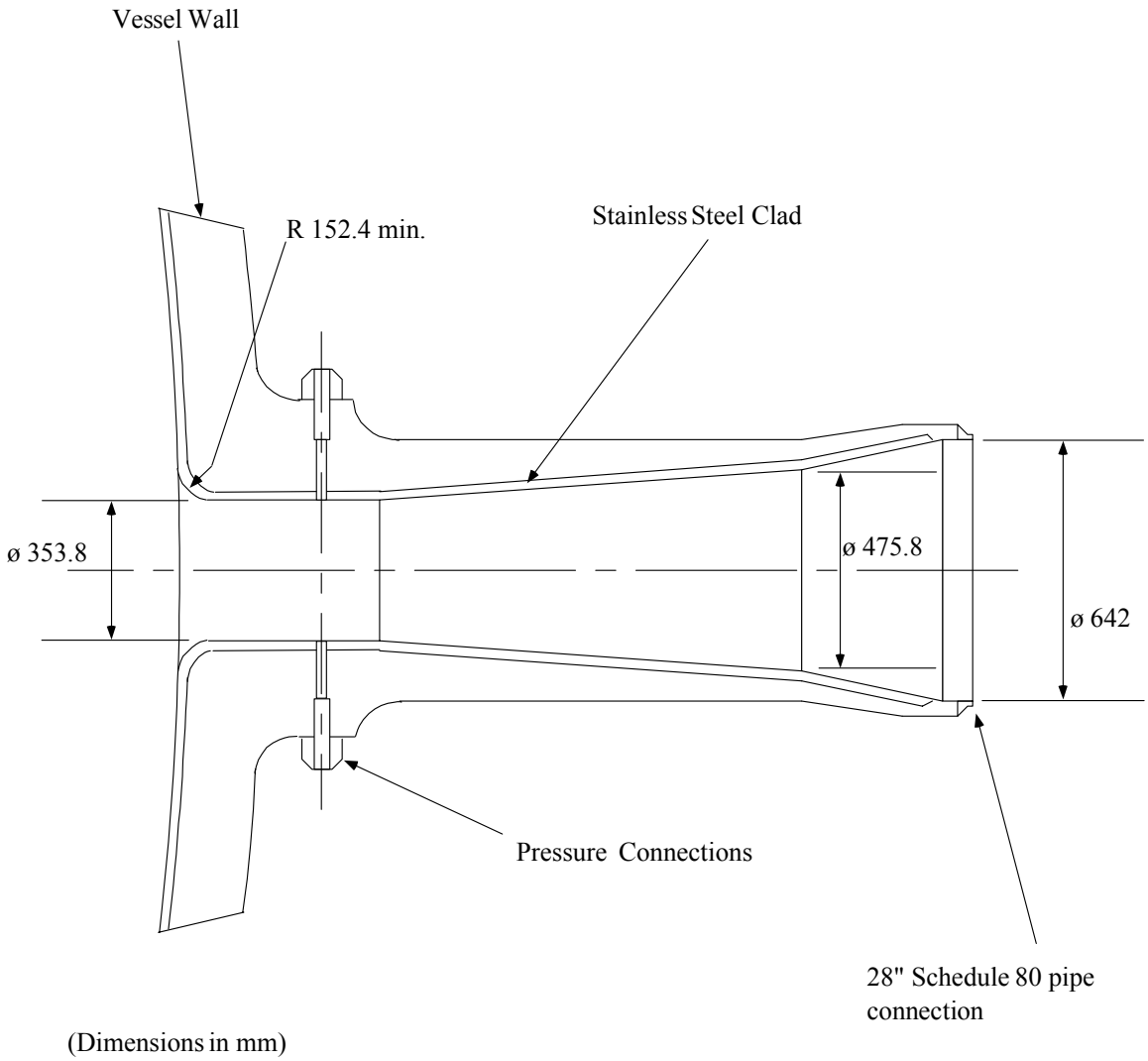

Figure 3.1-1 Main Steamline Flow Restrictor Nozzle

NBS System piping and supports are designed to permit hydrostatic testing of the piping without the need for any additional temporary supports.

Main steam piping and components inside the drywell are part of the primary RCPB and, therefore, designed for ASME Code Section III, NB-3000 (Class 1) requirements (or equivalent). The piping layout and support arrangement is optimized to minimize the effects of postulated pipe breaks and to minimize the jet impingement impact on any nearby safety-related components. Pipe whip restraints are provided to mitigate the effects of pipe break by evaluating each postulated break. The jet impingement evaluation is normally performed by developing jet maps for each postulated break. Jet impingement impact on each identified safety-related target located within the defined jet map is further evaluated and protective measures, such as jet shields, are provided as needed.

The main steamlines are routed both (a) to minimize the number of bends, elbows and fittings so that specified pressure drop requirements are not exceeded, and (b) to ensure adequate piping flexibility to withstand NSSS thermal expansion loadings. In addition, the pipe line routing includes sufficient length to match certain volume requirements. Horizontal runs of main steamline piping are sloped downward in the direction of flow with a slope typically of at least 1/100 [10 mm/m] of run. Additionally, low points typically have a drip leg to drain condensate back to the main condenser. Main steamline bypass/drain lines typically have a slope of at least 1/50 [20 mm/m] of run from the points of connection to the main steamlines and then to the main condenser and above the hotwell level to allow for proper drainage, but this slope may be reduced when the effects of pipeline thermal expansion and weight on the slope have been considered.

To the extent practical, all piping is arranged to avoid crud pockets, which, due to their potentially high radioactivity level, could hamper maintenance operations.

Material and equipment selection for the system components are based on a 60-year design life, with appropriate provisions for maintenance and replacement. The components, which may require periodic replacement and/or maintenance prior to the plant life are: valve packing, O-rings, seals, bearings, and MSIV internal valve trim. Careful designer attention is given to laying out/arranging mechanical equipment, piping, valves, structures ventilation equipment, duct work, electrical cable and conduit, instrumentation and associated piping, and wiring to enable expedient inservice inspections (ISI), adequate removal paths and efficient component servicing. All piping, wiring, instrument lines, etc. which must be disconnected for maintenance are provided with means for quick disconnection and reconnection. All manually operated valves are located for easy accessibility for operation during all modes of plant operation when valve operation is required (i.e., platforms or chain wheels are provided). A means of administrative control is provided to assure normal system alignment, and the open/close status of critical valves is indicated in the main control room via stem-mounted instrumentation.

The main steamline subsystem is designed to meet the overall plant availability goal of 92%. Closure of one-out-of-four main steamlines will not affect plant availability. Plant availability would be affected by the concurrent closure of two or more main steamlines. The MSIVs are selected based on a proven design used on other BWRs and the nitrogen and/or instrument air supply system services to these MSIVs each have a high degree of redundancy built into their system design.

3.1.4 Automatic Depressurization Subsystem

The ADS is a part of the Emergency Core Cooling System (ECCS) and operates to depressurize the reactor for the low pressure GDCS to be able to make up coolant to the reactor. The ADS is composed of the SRVs and the depressurization valves (DPVs) and their associated instrumentation and controls.

The ADS consists of the twelve SRVs and eight DPVs. The SRVs are mounted on top of the main steamlines in the drywell and discharge through lines routed to quenchers in the suppression pool as described in Section 3.1.5. Four DPVs are horizontally mounted on the horizontal stub tubes connected to the RPV at about the elevation of the main steamlines. The

other four DPVs are horizontally mounted on horizontal lines branching from each main steamline.

The use of a combination of SRVs and DPVs to accomplish the ADS function minimizes components and maintenance as compared to using only SRVs or only DPVs for this function. By using SRVs for two different purposes, the number of DPVs required is minimized. By using DPVs for the additional depressurization capability needed beyond what the SRVs can provide, the total number of SRVs, SRV discharge lines, and quenchers in the suppression pool are minimized. The need for SRV maintenance, periodic calibration and testing, and the potential for simmering are all minimized with this arrangement.

The SRVs and DPVs and associated controls and actuation circuits are located or protected so that their function cannot be impaired by consequential effects of the accidents. The ADS is designed to withstand the effects of flooding, pipe whip and jet impingement. ADS components are also qualified to withstand the harsh environments postulated for design basis accidents inside containment, including temperature, pressure, and radiation.

The SRVs and DPVs are designed with flange connections to allow easy removal for maintenance, testing, or rebuilding. They are designed, however, so that routine maintenance and inspection can be accomplished at their installed locations.

3.1.5 Safety Relief Valves (SRVs)

For its SRVs, the ESBWR uses a dual function, direct-acting type valve. Twelve SRVs are mounted (three apiece) on the main steamlines, which, in conjunction with a reactor trip, assist in limiting peak pressure in the RPV during plant transients of a severity beyond those transients for which the ESBWR isolation condensers provide pressure-limiting action.

Also, each of the SRVs is designed for the ADS function and is included in the ADS Subsystem and thus (as a group) perform a full-depressurization function for the reactor during a LOCA.

The SRVs operate in three main **protection** modes:

- Overpressure Safety Operation: In this mode the valves function as spring-loaded safety valves and open to prevent RCPB overpressurization. The valves are self-actuated by inlet steam pressure. The opening time for the SRVs, from the time the pressure reaches the valve set pressure to the time the valve is fully open, is < 0.3 sec.
- Automatic Depressurization Subsystem (ADS) Operation: In this mode all 12 SRVs are power-actuated to open automatically, under control by logic signals and spaced out in time into opening-sets of 4, 4, and then 8 SRVs, during LOCA events.
- Operator-Initiated Overpressure Relief Operation (power-actuated mode): In this mode the valves are opened using a pneumatic actuator (as in the mode above) upon receipt of a manually initiated signal. The SRVs can be operated either as one set-of-four pre-

designated SRVs, or operated individually in the power-actuated relief mode by remote manual controls from the main control room.

Refer to Figure 3.1-2 for a sketch of the SRV.

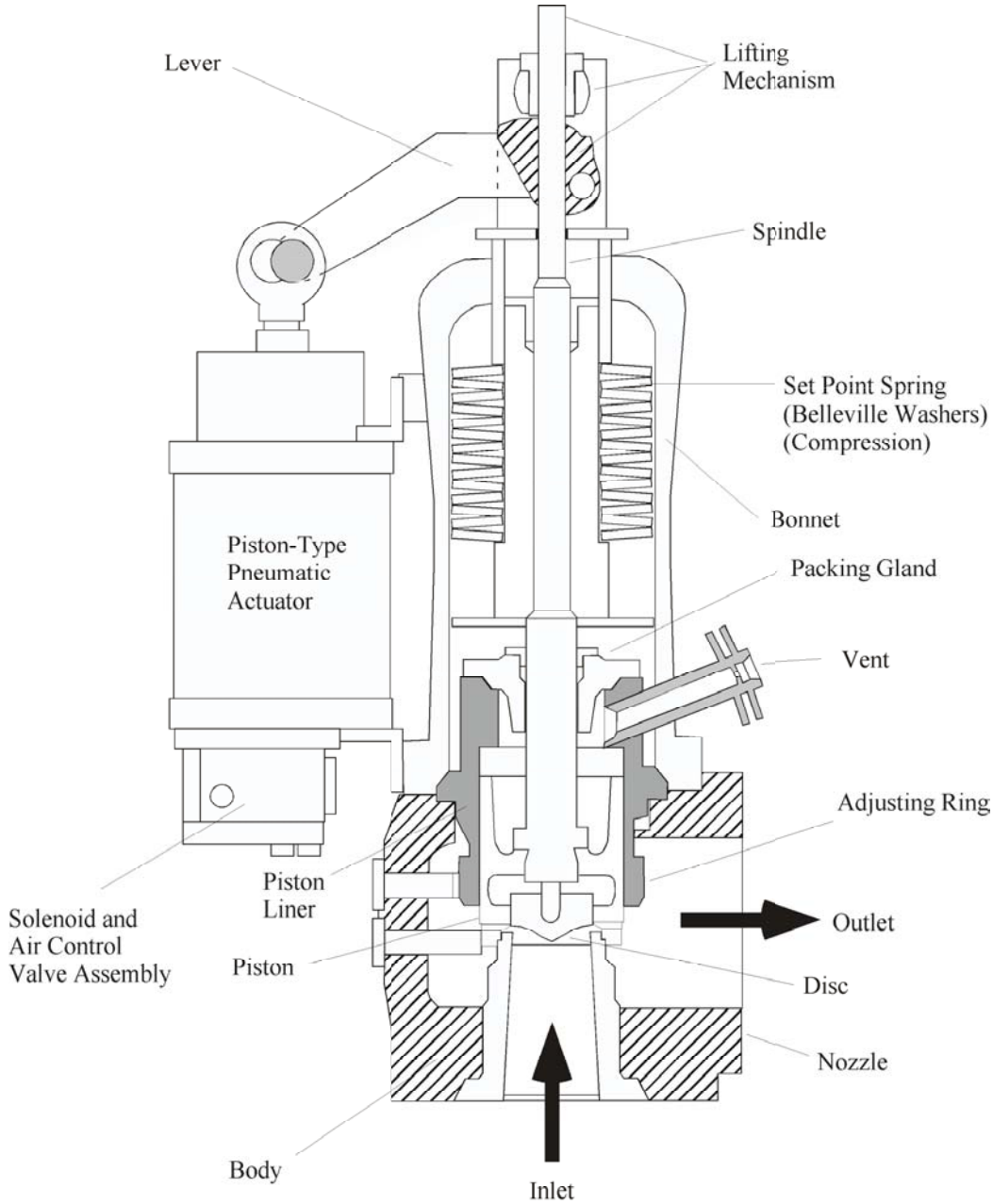

Figure 3.1-2 Safety Relief Valve

The SRV is opened by either of the following two **operation** modes:

- The safety (steam pressure) mode of operation is initiated when the direct and increasing static inlet steam pressure overcomes the combination of a heavy restraining spring together with any stem/bonnet frictional forces. The valves will open at their spring setpoints, which with reactor scram will then terminate the pressure transient within allowable limits. The condition at which this action is initiated is termed the "popping pressure" and corresponds within the allowable tolerance limits to the set-pressure value stamped on the nameplate of the SRV. When RPV pressure drops to approximately 0.55 MPa-d below the popping pressure of a given SRV, the SRV recloses by action of the heavy spring closure force overcoming the steam pressure underneath the disk.

- The relief (power) mode of operation is initiated when an electrical signal is received at any of the three solenoid valves located on a pneumatic actuator assembly. For the ADS function a safety-related pneumatic accumulator (220 liters in size) is provided for each SRV and is located close to the SRV to supply pressure for this mode of valve actuation. Two safety-related solenoids are used to communicate this safety-related nitrogen accumulator with the SRV pneumatic actuator. These are the solenoids that receive signals from the ADS logics of the Safety System & Logic Control System (SSLC System). The opening of either of these two solenoids will cause the SRV to open. When the solenoid valve(s) open, pressurized nitrogen enters the lower side of the piston/cylinder within the pneumatic actuator which action pushes the piston and, in turn, moves a lever-arm-type lifting bar mechanism upwards. The valve stem has a sliding-type lifting mechanism coupled to this lifting bar, so that as it is lifted by the lifting bar the stem is raised thereby opening the valve to allow reactor steam to discharge through the SRV until the solenoid valve(s) closes again to cut off pressurized nitrogen to the actuator. The pneumatic operator is so arranged that, if it malfunctions, it will not prevent the SRV from opening when steam inlet pressure reaches the spring lift set pressure.

- The third solenoid is non-safety related; it connects to a non-safety related nitrogen accumulator of similar size to the safety-related accumulator and is used for relief function. This third solenoid receives its signals from the switches at the main control panels. The SRV is opened in the same way, simply through the non-safety related nitrogen supply.

- No single failure will prevent the SRV from opening in the ADS mode when required or cause inadvertent SRV opening when not required. The solenoid valves are "three-way" solenoids, normally venting, with the vents of both safety-related and non-safety related solenoids arranged in series along the same pneumatic vent line but which when signaled to actuate, then operation (= position change) by any one of these three solenoid valves will block the common vent and concurrently admit pressurized gas into the piston/cylinder chamber of the SRV pneumatic actuator. When the non-safety-related solenoid has been actuated by operator manual action, that SRV remains open until the operator returns the switch to its closed position. When the safety-related solenoids have been actuated by ADS signals, the OPEN condition becomes sealed-in to the SSLC

System logic. The SRVs are then reclosed only when recovery actions are initiated in the post-accident recovery period.

The ADS Subsystem is designed to use all 12 of the SRVs described above. Pneumatic pressure inside the accumulators of these SRVs is maintained within the range 1.13-1.37 MPa-gauge . The accumulator capacity is sufficient to provide one SRV actuation with the drywell pressure at design values (0.38 MPa-gauge), or the accumulator can provide five openings with the drywell pressure at normal operating pressure. Subsequent actuations for an overpressure event can be spring actuations to limit reactor pressure to acceptable levels if the backup nitrogen storage supply from the Nitrogen Supply System is not available.

A safety-related backup subsystem is provided to supply make-up nitrogen over a period of 8 hours to the safety-related (ADS) accumulators to compensate for nitrogen leakage during SRV actuation. This backup subsystem is comprised of two banks of bottled pressurized nitrogen; one bank supplies makeup to half of the SRVs, the second bank supplies makeup to the remaining half of the SRVs. The SRV accumulators are also connected to the normal plant pneumatic (nitrogen) supply for initial charging and as a non-safety related backup for plant investment protection. [Note that the opened DPVs provide long-term RPV depressurization capability. This unburdens the nitrogen supplies from the extended operability requirements (e.g., 100-day operability) for the ADS SRVs of previous BWR designs.] Therefore, the ADS SRVs will not become unavailable on loss of normal plant pneumatic supplies. The plant technical specifications will allow 14 days to restore to operating status if two ADS SRVs are inoperable. If three ADS valves are inoperable, technical specifications will require restoring one of these valves to operable status in 7 days. If four valves are inoperable, the reactor will be required to be in HOT SHUTDOWN in 12 hours.

The SRV capacity (i.e., total number of SRVs) is sized based on two considerations, pressurization events, and LOCA events. For the pressurization events, the total flow capacity requirement of the SRVs is based on the ASME Code Section III overpressure protection requirement that the maximum peak RPV pressure during transients classified as MODERATELY FREQUENT transients (i.e., occurrence frequencies equal to or greater than 1E-1 per year) will not exceed 110% of the RPV design pressure, or that those transients defined as INFREQUENT transients (i.e., occurrence frequencies equal to or greater than 1E-4 per year) will not exceed 120% of the RPV design pressure. The limiting case is the ATWS transient, which although having an occurrence frequency below the 1E-4 per year limit, is by agreement with regulatory authorities included by stipulation in this group. During ATWS events, the SRVs lift by spring-action response to a condition of RPV pressure becoming temporarily higher than the spring set-point. In time, these opened SRVs during ATWS events will reclose, with an anti-chatter dead-band on pressure set-point level being incorporated into the valve disk/seat design to prevent excessive openings and reclosings. Results of preliminary analyses show that the arrangement with 12 SRVs will provide adequate margin to the design limits.

For the LOCA events, the SRVs are part of the ADS, which consists of SRVs and DPVs. The ADS is designed to quickly depressurize the RPV in a timely manner to allow the GDCS injection flow to replenish core coolant to maintain core temperature below design limits in the event of a LOCA. Preliminary results of LOCA analyses show that 12 SRVs will also provide adequate margin for the depressurization of the RPV for all design basis LOCAs.

The SRV simmer margin [i.e., the difference between SRV direct actuation pressure and RPV pressure (based on nominal settings)] is greater than 17% with respect to main steam normal operational pressure, and hence should provide excellent leak tightness.

The SRV design is a proven, highly reliable device with in-service experience for this ESBWR application. The nitrogen supply to the SRV is sufficiently redundant with a high degree of reliability to preclude loss of availability from this source.

SRV discharge pipelines are coupled to the exhaust flange of each SRV to convey discharged steam to the suppression pool. The SRV discharge pipelines are sized so that the critical flow conditions occur through the valve. The SRV discharge pipeline runs downward through the drywell/wetwell vent wall, then emerges into the suppression pool below the pool surface. Each such SRV discharge pipeline is terminated with a steam quencher that distributes its steam discharge over a large pool area via four horizontal distribution arms each containing hundreds of small openings, thereby accomplishing complete condensation of the discharged steam in the pool. The multiple-hole discharges from the stainless steel quencher arms also act to "soften" the sudden dynamic pressure load imposed on suppression pool boundaries as steam-compressed noncondensable gas (nitrogen) previously standing in the SRV discharge pipeline is rammed through the quencher. The nominal quencher-arm discharge submergence is about 3 m below the normal water surface. To minimize corrosion, the portion of the SRV discharge pipeline that runs through the vent wall and through the suppression pool is fabricated from stainless steel.

The SRV discharge pipelines and line quenchers are arranged around the suppression pool in such a manner that the suppression pool becomes heated by discharge flow in a nominally uniform manner.

SRV discharge pipelines out to the quencher are designed to ASME Code Section III, Class 3. In addition, all welds in the SRV discharge pipeline piping in the wetwell above the surface of the suppression pool is non-destructively examined to the requirements of ASME Code Section III, Class 2.

Two 250 mm nominally-sized single-disk vacuum breakers are connected in-parallel on each SRV discharge pipeline to prevent drawing an excessive amount of water back up into the line as a result of steam condensation following termination of relief operation. This prevents the conditions in the discharge lines of water hammer and pressure instability. These SRV discharge pipeline vacuum breakers are located in the drywell, as high as feasible above the suppression pool water level.

3.1.6 Depressurization Valves (DPVs)

Figure 3.1-3 depicts a DPV assembly in the closed and open positions. The DPVs are a non-leak/non-simmer/non-maintenance design. They are straight-through, squib-actuated, non-reclosing valves with a metal diaphragm seal. The valve size provides about twice the depressurization capacity as an SRV. The DPV is closed with a cap covering the inlet chamber. The cap will readily shear off when pushed by a valve plunger, which is actuated by the explosive initiator-booster. This opens the inlet hole through the plug. The sheared cap is

hinged such that it drops out of the flow path and will not block the valve. The DPVs are designed so that there is no leakage across the cap throughout the life of the valve.

Two initiator-booster (squibs), singly or jointly, actuate the shearing plunger. The squibs are themselves each initiated by either one or both of, two battery-powered, independent firing circuits. One initiator-booster has two pairs of pins connected through a wire bridge, the other has one pair of pins connected through a bridge wire. As mentioned before, the firing of one initiator-booster is adequate to activate the plunger. Nominal firing voltage is 125 Vdc, however the initiator-boosters are designed to function with any applied voltage between 90 and 155 Vdc. The valve design and initiator-booster design is such that there is substantial thermal margin between operating temperature and the self-ignition point of the initiator-booster.

The DPVs form a part of the reactor coolant pressure boundary (RCPB) and are therefore Quality Group A, ASME Section III, Class 1, and Seismic Category I.

The DPV inlet side design pressure is 10.34 MPa gauge at a design temperature of 313°C . The outlet-side design pressure is 4.97 MPa gauge at a design temperature of 264°C .

The valve bodies are made of 304 or 316 stainless steel (304L or 316L stainless steel where welding is employed). Design life is for 60 years with appropriate corrosion allowances. The 60 year design life includes remaining functional after being subjected to a variety of normal and abnormal pressure-temperature transients, including two cycles of full ADS depressurization of the reactor. Certain components, such as the initiator-boosters, require periodic replacement over the 60-year design life.

The DPVs are designed to operate with saturated steam flow ranging from 95% quality to 2.8°C (5°F) superheat. Rated flow capacity of each DPV, based on dry saturated steam conditions and a flow-induced backpressure of up to 50% of the inlet pressure, is between 8.62 x 10^5 and 10.6 x 10^5 kg/hr at an inlet pressure of 7.48 MPa gauge .

The specified response times (opening time to full rated capacity) of the DPVs, with a static backpressure of up to 50% of the inlet pressure, are as follows:

- 0.45 seconds or less with an inlet pressure of 6.89 MPa gauge or greater.
- 5 seconds or less with an inlet pressure between 6.89 MPa gauge and 0.69 MPa gauge .
- 30 seconds or less with an inlet pressure below 0.69 MPa

The DPVs have undergone engineering development testing using a prototype to demonstrate the proper operability, reliability, and flow capability of the design. Functional tests were performed to assure proper operability and the adequacy (amount and chemical compound) of the initiator-booster to operate the valve assembly. Heat transfer tests were also performed to determine the temperature of the initiator-booster based on the valve inlet temperature and a range of ambient temperatures.

Reliability testing was conducted on a sufficient number of initiator-boosters to demonstrate the reliability of the chemical to fire and properly actuate the valve while at the same time

avoiding accidental, unwanted firing. These tests involved irradiating, thermally aging, and subjecting the initiator-booster to LOCA environmental conditions before firing.

Flow capacity tests of the prototype were also conducted to assure the flow rate requirements noted above were satisfied.

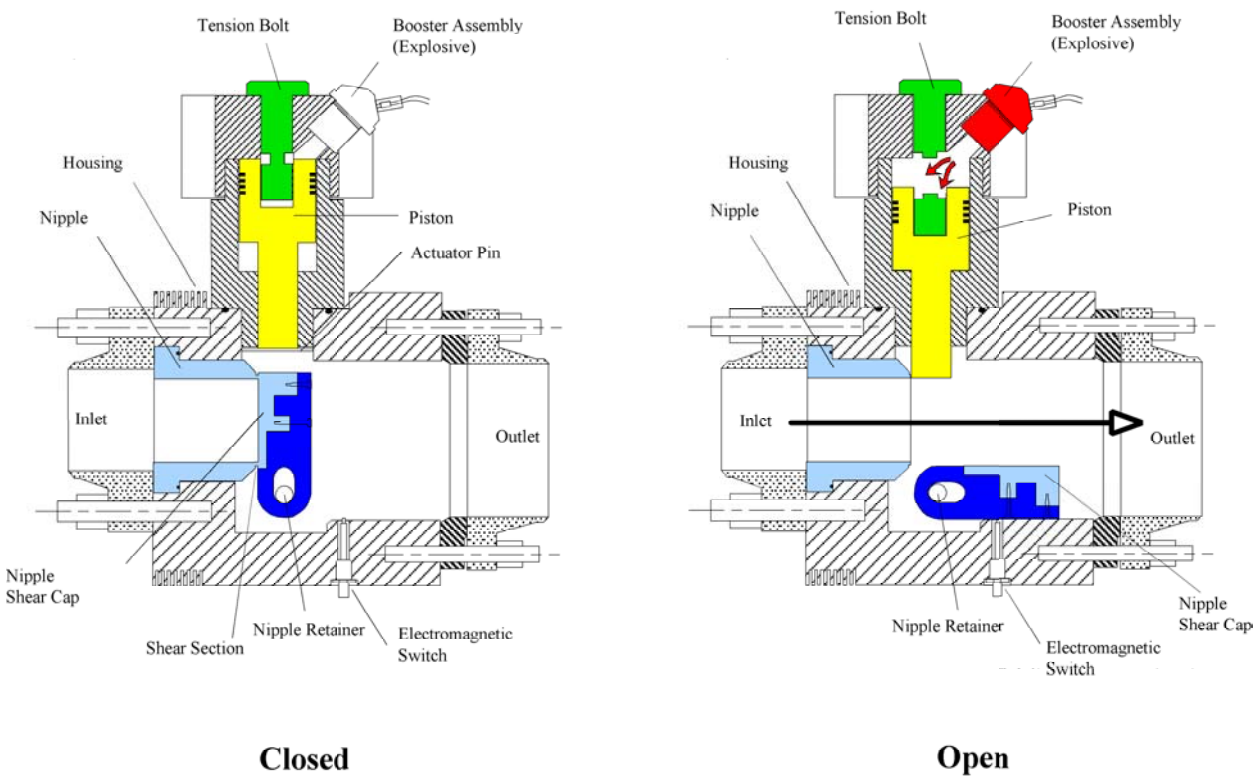

Figure 3.1-3

Depressurization Valve

3.1.7 Main Steam Line Isolation Valves (MSIVs)

Fast-closing Y-pattern normally-open fail-closed MSIVs are used to prevent uncontrolled primary coolant release to the environment. Two MSIVs are welded in the horizontal run of each of the four main steamlines. One valve is located as close as possible to the inside of the drywell, and the other is just outside the containment to satisfy the primary containment isolation requirement of 10CFR50, Appendix A, Criterion 55. These valves are located as close as practical to the containment penetration in order to minimize an extension of the primary containment and primary coolant pressure boundaries. "As close as practical" takes into account the need for inservice inspection (ISI) accessibility, since periodic weld inspections and examination are required per ASME Code Section XI. The MSIVs are pneumatically opened against heavy springs causing the valve disk to rapidly close under any loss of pneumatic pressure. The inboard MSIVs utilize nitrogen-gas pneumatic supplies; outboard MSIVs use high-pressure air.

Rated steam flow through each valve is 1.947×10^6 kg/hr . Refer to Figure 3.1-4 for a sketch of the MSIV. The main disk assembly is attached to the lower end of the valve stem. Normal steam flow tends to close the valve. The pressure is over the disk. The bottom end of the valve stem or a stem disk attached to the stem closes a small pressure balancing hole in the main disk assembly. When the hole is open, it acts as an opening to relieve differential pressure forces on the main disk assembly. Valve stem travel is sufficient to give flow areas past the wide open main disk assembly greater than the seat port area. The main disk assembly travels approximately 90% of the valve stem travel to close the main seat port area; approximately the last 10% of the valve stem travel closes the pilot seat. An air cylinder actuator is provided that can open the main disk assembly with a maximum differential pressure of 1.38 MPa-gauge across the isolation valve in a direction that tends to hold the valve closed. The Y-pattern valve permits the inlet and outlet passages to be streamlined; this minimizes pressure drop during normal steam flow and helps prevent debris build-up on the valve seat.

The valve stem penetrates the valve bonnet through a stuffing box that has one set of replaceable expanded graphite packing rings with no leakoff line. Attached to the upper end of the stem is an air cylinder that opens and closes the valve and a hydraulic dashpot that controls its speed. The speed is adjusted by hydraulic control valves in the hydraulic return line bypassing the dashpot piston.

Valve quick-closing speed is a 3 - 4.5 seconds when N_2 or air is admitted to the upper piston compartment to isolate the NBS System in the event of a LOCA, or other events requiring containment or system isolation to limit the release of reactor coolant. The MSIVs can be test-closed one-at-a-time with a 45 - 60 second rate for full stroke slow closing speed by relieving the N_2 or air from the lower piston compartment. This is established per plant operating experience so that the slow valve closure (up to 10% close) does not produce a transient disturbance large enough to cause a reactor scram.

A pneumatic cylinder is supported on the valve bonnet by a yoke assembly. Helical springs around the spring guide shafts close the valve if gas pressure is relieved from the lower piston

compartment. The motion of the spring seat member actuates switches in the near-open/near-closed valve positions.

The MSIV is operated by pneumatic pressure and by the action of compressed springs. The pneumatic control unit is attached to the gas cylinder. The hydraulic control unit is attached to the damper.

The MSIV actuation system and the actuation pressure source is arranged in such a way that, when one or both AC solenoids are energized, the accumulator will pressurize the valve actuator to open the MSIV, overcoming the closing force exerted by the spring. When both solenoids are deenergized, the actuation pressure will be switched to pressurize the opposite side of the valve actuator and relieving the resistance to the spring to close the MSIV. This spring force, in conjunction with the actuator, closes the MSIV.

When all the MSIVs are closed, the combined leakage through the MSIVs for all four steamlines is no greater than 66.1 liters per minute at standard temperature of 20° C and pressure (one atmosphere absolute pressure) with the differential pressure across the MSIV equal to or greater than 0.176 MPa-d .

Nitrogen is used for the inboard MSIV operation, and is supplied by a nitrogen-filled subsystem of the Instrument Air System (IAS System) in the interests of maintaining the drywell environment where the inboard MSIVs are located as nitrogen-inerted. Instrument air for the outboard MSIV operation is also supplied through the IAS System.

A separate pneumatic accumulator (216 liters) is provided, and located close to each MSIV, that supplies pressure as backup operating gas to assist in valve closure in the event of a failure of pneumatic supply pressure to the valve actuator.

Each MSIV is designed to accommodate saturated steam at plant operating conditions with a moisture content of approximately 0.3%, an oxygen content of 30 ppm, and a hydrogen content of 4 ppm. The valves are furnished in conformance with a design pressure and temperature rating in excess of plant operating conditions to accommodate plant overpressure conditions.

In the worst case, if the main steamline should rupture downstream of the valve, steam flow through the outboard MSIV would momentarily spike upward (for about 200 milliseconds, the time it takes for the sonic depressurization wave originating at the break to travel backwards to the RPV main steamline outlet nozzle), then drop back and remain at no higher than 200% of rated flow. Continued outflow at rates above 200% of rated flow is prevented by the venturi flow restrictor located in the RPV steam outlet nozzle.

As the MSIV closes, the first 75% of valve stem movement has little effect on flow reduction, because the principal flow restriction within the valve is (up until then) occurring at the valve seat. During the final 25% of valve stem movement the principal flow restriction in the valve is the curtain area produced by the main disk assembly as the disk assembly approaches the valve seat.

The design objective for the valve is a minimum of 60 years service at the specified operating conditions. Operating cycles are estimated to be 1500 in 60 years and 3600 exercise cycles in 60 years.

In addition to minimum wall thickness required by applicable codes, a corrosion allowance is added to provide for 60 years service.

Design specification ambient conditions for normal plant operation are 57°C normal temperature and 20% humidity in a radiation field of 0.2 Gy/h gamma and 6 x 10^4 Neutron/cm^2 continuous for design life. The inboard MSIVs are not continuously exposed to maximum conditions, particularly during reactor shutdown, and the MSIVs outside the primary containment and shielding are in ambient conditions that are considerably less severe.

The MSIVs are designed to close under accident environmental conditions with limits specified as 171°C for one hour at drywell design pressure of 0.31 MPa-gauge. In addition, they will be designed to remain closed under the post-accident environment conditions that presently remain to be determined.

To sufficiently resist the response motion from the safe shutdown earthquake (SSE) and hydrodynamic loads, the MSIVs are designed as Seismic Category I equipment. The valve assembly is manufactured to withstand the faulted loads combination applied at the mass center of the valve with the valve located in a horizontal run of pipe. The stresses caused by horizontal and vertical dynamic forces are assumed to act simultaneously with other live and dead loads. The stresses caused by dynamic loads are combined with the stresses caused by other live and dead loads including the operating loads. The allowable stress of this combination of loads is based on the acceptance criteria of the applicable ASME codes. The parts of the MSIVs that constitute the RCPB are designed, fabricated, inspected, and tested as required by ASME Code Section III, Class 1 components.

The MSIVs have provisions for easy air testing during outage for Local Leak Rate Test (LLRT) to meet the requirements of 10CFR50, Appendix J.

Steamline plugs are available and can be installed from the refueling platform after wet transfer of the steam dryer for refueling when the RPV is flooded above the steam outlet nozzles. The steam line plugs can be used for MSIV leak-tightness testing with pressure applied in the normal direction of steam flow. Installation of the steamline plugs also allows the reactor cavity to be full of water and refueling operations to be underway at the same time SRVs are being removed from the main steamlines for changeout.

Pressure equalizing lines are provided to enable equalizing pressure across the MSIVs and warm up the main steamlines downstream of the MSIVs during startup and following a steamline isolation.

Drain lines are connected to the low points of each main steamline, both inside and outside the drywell in the reactor building and in the turbine building. The main steamline drains permit controlled-rate water drainage from the steamlines during startup, shutdown, and low power operation ($\leq$ 40%). The drain line may be used to reheat and repressurize the steamlines

downstream of the inboard MSIVs during startup from hot restart conditions. This repressurizing steam also permits reestablishing condenser vacuum. Discharge from the drains goes to the main condenser. The drains from the main steamlines inside the containment are used in conjunction with main steamline pressure equalizing lines to equalize pressure across the MSIVs and to warm up the main steamline pipe run downstream of the outboard MSIVs during startup and following a steamline isolation. Drains located downstream of the outboard MSIVs in the steam tunnel will remain open during isolation events and automatically closed during normal operation above 40% rated power level. Drains located in the TB will be in continuous operation regardless of load. Main steam drain lines generally use FAC-resistant material to minimize the source of through-wall leaks and expensive inspection programs.

The main steam bypass and drain containment isolation valves are motor-operated valves and are sized to have a minimum closing speed of 305 mm/min in order to satisfy radiological release limits. These valves generally are sized with approximately 50% margin above the highest drain flow rates calculated for the maximum service condition.

An orifice is provided for each of the bypass/drain header bypass line to the main condenser. This is used to reduce the line pressure from each drain header before it drains to the main condenser.

The motor-operated valves (MOVs) and the check valves that have active safety-related functions to open, close, or both open and close, are designed to maintain containment integrity by providing containment isolation functions under differential pressure, fluid flow, and temperature conditions per the requirements of USNRC Reg Guide 1.141.

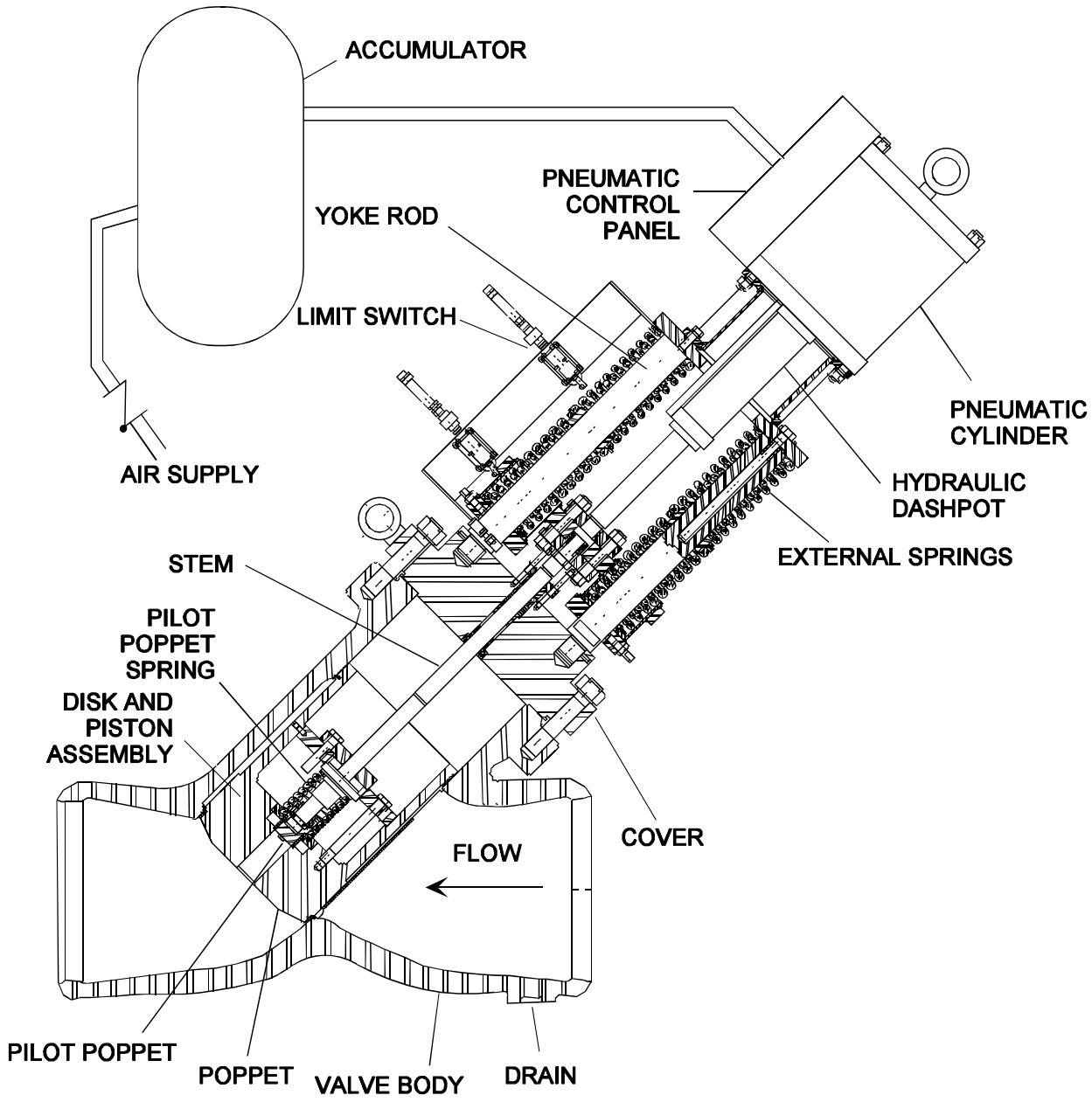

Figure 3.1-4 Main Steam Isolation Valve (MSIV)

3.1.8 RPV Head Vent

A vent connection is provided on the top head of the RPV to permit air to be released from the RPV into a clean radwaste sump inside the drywell so that the vessel can be filled with water for hydrostatic testing. The vent line is cross-connected within the drywell to one of the main steamlines to permit venting non-condensable gases from the RPV which might accumulate in the vessel head space high point during reactor operation. Vessel head water level may be measured during reactor shutdown using the vent connection as the upper tap for the level sensor.

Refer to Figure 3.1-5 for a representation of the RPV vent.

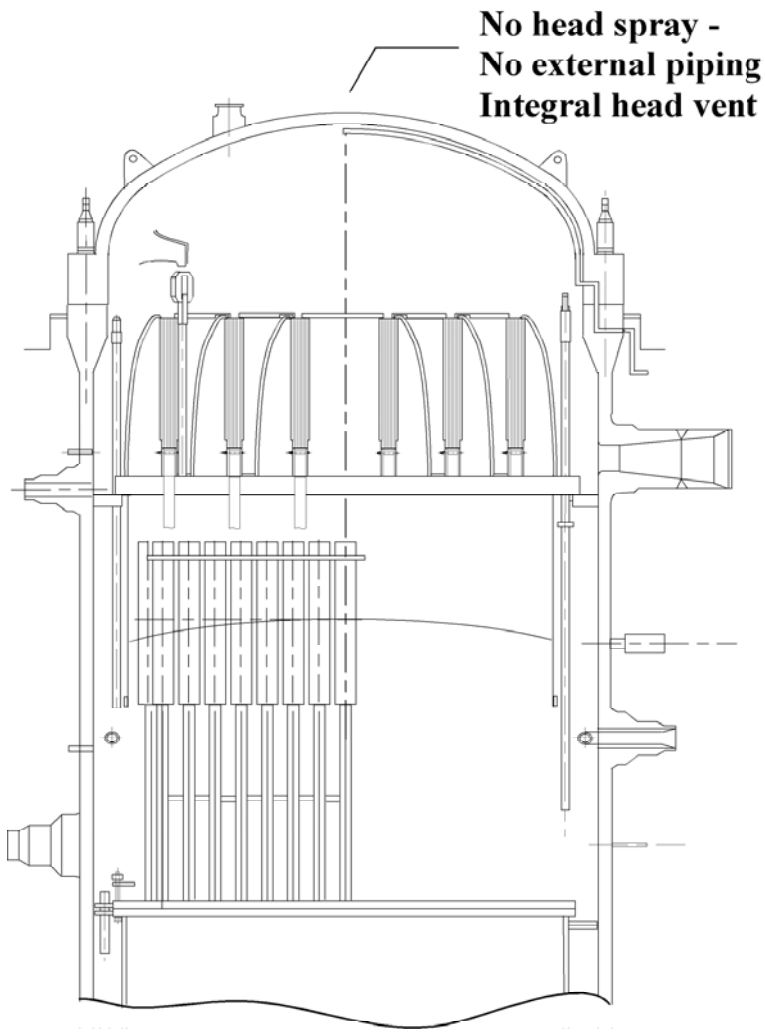

Figure 3.1-5 RPV Head Vent

3.1.9 Main Steam Auxiliary Supplies

Within the turbine building, turbine bypass connections are arranged off the main steamlines to provide steam to the turbine bypass valves. The connections are in close proximity to one another and attached to a common header. This combination provides equal steam access and equal admittance conditions for each valve.

A steam injection line is provided to the two-stage series-type ESBWR main condenser to permit direct-heating of (via injecting steam into) the water in the condenser hotwells first at startup and thereafter whenever unit power levels are less than about 60% (more or less) of unit load. This action assists the main condenser and its associated systems in bringing, via deaeration, dissolved oxygen levels in the condensate down to the very low parts per billion (ppb) specified for water leaving the main condenser and returning through the Condensate and Feedwater System to the NSSS.

Steam supply lines are also provided to the Offgas System (OGS System). Motive steam is provided to the steam jet air ejectors, and heating steam is provided to the preheater section of the recombiners.

A steam supply is provided to the main turbine gland seals as a secondary supply source. Main steam can be used as the steam supply to turbine gland seals during startups when auxiliary steam from the reboiler (the normal startup source) is not available and the heater drain tank pressure is inadequate for sealing purposes.

3.1.10 Feedwater Lines Subsystem

The Feedwater Lines Subsystem of the NBS System is, for the limited purposes of this report, defined to consist of the portions of the feedwater strings beginning at the suction inlets to the feedwater booster pumps, and extending through to feedwater spargers mounted inside the RPV.

The ESBWR feedwater line subsystem is located in (all of):

- the turbine building, with pumps, high pressure heaters, and pipelines that route along with the main steamlines to the RPV through:
- the steam tunnel, that extends well above ground-level from the turbine building across a distance some 6 m over to:
- the reactor building, which provides a boundary to the steam tunnel and also provides a seismic support for main steamlines and feedwater lines to be rendered immobile via a safety-related seismic structure, and then to:
- the containment, across the upper drywell part of which two feedwater lines are routed to connect (after branching each into three smaller lines) eventually to:
- the RPV, inside of which are feedwater spargers that discharge feedwater for mixing with recirculated coolant delivered by the RPV's internal steam separators.

The ESBWR feedwater line subsystem begins with its receiving suction flow via a suction flow header supplied from a single upstream direct contact feedwater heater tank that has a gross capacity of 6 - 8 minute's worth of feedwater flow, but is operated with a level representing 3 - 4 minute's worth of feedwater flow. The suction inlets of four feedwater booster/feedwater pump trains are connected to this common suction header. Because the contents of this direct contact feedwater heater tank is saturated water, this direct contact feedwater heater tank is positioned approximately 15 m higher than the elevation of the feedwater booster pump suctions to provide sufficient NPSH at the pump suction intakes under peak transient flow rate conditions.

Having a direct contact feedwater heater tank such as this provides the equivalent heat rate performance gained with "forward pumped" heater drains but without needing heater drain pumps. Approximately 30% of this direct contact feedwater heater tank's inventory comes from the #5 and #6 feedwater heater drains and the remaining ~70% comes from the condensate system.

Rated flow for the feedwater line subsystem is approximately 7.86 x 10^6 kg/hr . Because of the large RPV voids region/sensed level collapse in the annulus under severe transients, the feedwater line subsystem is sized to provide 175% feedflow at approximately 0.41 MPa-d (differential) above reactor normal operating pressure [i.e., discharge pressures (ignoring line, sparger, and elevation losses) of], and to meet this requirement with N - 1 pump trains operating. [It is this rather large capacity requirement that sets the size of the pumps in the condensate/feedwater system and determines most of the plant's electrical system capacity.] The design arrangement chosen, four feedwater booster/feedwater pump trains with three trains normally operating, requires the pumps to run somewhat below their design best-efficiency-point condition during normal (three pump) operation so that the flow above design flow is not excessive during off-normal (two pump) operation. The selected arrangement chosen is considered preferable because it provides a smoother transient following a pump trip (no spare pump to be brought on line) and therefore lessens the risk of plant trip.

The initial members of each two-pump feedwater booster/feedwater pump train--the feedwater booster pumps --are designed as "deep well" pumps, with shafts vertical and with a constant speed motor. Their deep well configuration provides minimized space impact on turbine building arrangement. These pumps each can provide ~ 58% of the feedwater line subsystem total rated flow (i.e., with the output from three trains combined, giving peak transient total flows of 175% rated) with a TDH (total developed head) of ~ 0.55 MPa-d , thus producing total discharge pressures of ~ 3.31 MPa .

With the previously mentioned 3 - 4 minutes' worth of feedwater flow capacity provided in the direct contact feedwater heater tank, the condensate pumps (system) can be sized for only 5172 t/hr , which represents ~ 0.7X VWO (valves wide open) flow in steady state and, more importantly, the presence of the large inventory stored in the direct contact feedwater heater tank means that the condensate system need not be sized for normal (110%) transients nor the very large (175%) feedflow transient. This will save significant costs in those pumps, in SPE/SJAE/offgas auxiliary condensers and provide some savings in demineralizer capacity. The level in the direct contact feedwater heater tank is actively controlled by modulating the incoming condensate system flow rate via two in-parallel direct contact feedwater heater tank

level control valves. Note that a rapid reduction in turbine power caused by a turbine trip or 100% load rejection will cause a rapid reduction in turbine extraction steam entering the direct contact feedwater heater tank while the feedwater flow leaving the direct contact feedwater heater tank may rapidly increase. For these transients, a motor-operated valve is provided at the condensate exit from the demineralizers, allowing higher condensate system flows that can rapidly fill the direct contact feedwater heater tank with water until normal levels are reached.]

At steady-state rated plant operating conditions, the feedwater booster pumps supply a normal feedwater pump suction pressure of 4.00 MPa and the direct contact feedwater heater tank has an operating pressure of approximately 0.55 MPa-d . But under challenge conditions where the feedwater line subsystem must provide 175% rated flow, it develops that pressure in the direct contact feedwater heater tank falls [to about 0.17 MPa]; and the booster pumps TDH drops such that output pressure then reduces to 2.93 MPa . The resulting differential pressure (7.58 MPa - 2.93 MPa = 4.65 MPa-d) thus must be met by the feedwater pumps when each pump is providing 58% of the feedwater line subsystem rated total flow rate under the 175% transient flow condition.

The feedwater booster pump discharges are directly piped to a corresponding feedwater pump suction. A feedpump minimum flow valve is provided that also serves to provide the feedwater booster pump minimum flow requirements. The two pumps within a train are automatically started approximately 10 seconds apart and interlocked so that if either trips the other will also trip.

Line losses from the discharge of the feedwater pumps--not inconsequential even at 100% rated flow conditions--increase by the velocity-squared for the peak transient duty; this also burdens the TDH requirement and thus the ultimate motor shaft power rating of these feedwater pumps. However, because the feedwater pumps are variable speed pumps they can maintain a fairly high efficiency over the range from normal out to peak transient conditions, and this greatly helps to minimize ultimate motor shaft power rating. For preliminary design, the ESBWR plant designer has assumed an 80% feedwater pump efficiency (somewhat below the 85% expected maximum efficiency) will apply to the normal and peak transient conditions. A figure of 92.5% has been taken for the assumed drive efficiency, and 95% for the electric motor efficiency.

The feedwater pumps are supplied with variable speed induction motors. The ESBWR design presumes feedwater pump drives type will be similar to (or same as) the high efficiency Voith “VORECON” hydraulic couplers currently offered for large power station feedwater system applications.

Broadly, it then results that the feedwater booster pumps and feedwater pumps require pumps and motors sized as follows:

- Normal operating conditions:

	Feedwater booster pumps	Feedwater pumps
Pump TDH, m :	381	408
Flow, m^3/hr :	2,548	2,548
Pump efficiency, %:	80	80

- Peak transient conditions:

Head, m:	305	611
Flow, m^3/hr :	4,459	4,459
Pump efficiency, %:	70	80

Large (usually) single stage feedwater pumps have minimum flow requirements between 25 - 40% of their rated flows. The minimum flow requirement is set by the pump manufacturer. Operation below minimum flow can cause hydraulic disturbances within the pumps, which can lead to pump damage and low frequency pulsation in the piping. Minimum flow is controlled by modulating the position of the recirculation control valve to maintain the reactor feedwater pump suction flow above the pump's required minimum flow rate. For ESBWR at normal rated plant power output, the feedwater pump trains would be supplying about 57% of their rated flow, and assuming a design minimum flow condition of 33%, the plant has only to back down to 58% power before the minimum flow valves start to open. For plant designs where this minimum flow is returned to the main condenser, such operation can have a large effect on plant efficiency. However, since for ESBWR the minimum flows are returned to the direct contact feedwater heater tank, no thermal performance is lost. The other solution--of shedding the third pump on a plant undergoing a daily load reduction/increase--would result in undesirable reduction in service lifetime on the feedpump motors.

The feedwater pumps discharge into a common header which later divides to supply feedwater to two strings of feedwater heaters (Heater #5 and #6), the outputs from which then form twin feedwater lines that run through containment penetrations on their runs to the RPV. Flow measurement venturiis are provided in the feedwater lines before these lines reach the containment.

A bypass line featuring two parallel control valves is, additionally, provided around FW Heaters #5 and #6 to facilitate startup, to allow full load operation with one heater string out of service, and also to provide trimming capability for RPV water level control. The bypass line around the high pressure feedwater heater strings provides 50% bypass capacity when an high

pressure feedwater heater string is isolated and for final feedwater temperature reduction. The bypass line contains two parallel bypass valves each sized for 25% capacity. The bypass valves are air operated globe valves. One bypass valve, the low flow control valve, is used to provide flow to the reactor during startup. During this mode of operation, the control valve is used to control the reactor water level since the required feedwater flow rate is below the controllable range of the adjustable speed feedwater pumps.

A recirculation path downstream of the last feedwater heater back to the main condenser is provided to allow for system cleanup and adjustment of water chemistry prior to initiating feed to the reactor. Cleanup is done in the Condensate Polishing System (CPS). During unit startup, one high pressure heater string is operated at a time, for cleanup. The attendant recirculation loop is wide open. The path can also be used for placing the feedwater system in wet lay-up following outage maintenance that requires draining part of the feedwater lines. This is accomplished by using the recirculation path back to the condenser while venting the piping and equipment high points.

The cleanup loop is typically designed for a velocity of 6.1 m/sec at 50% NBR feedwater flow and design pressure and temperature. The 50% capacity cleanup loop increases the efficiency of the condensate polishing and minimizes the time required for removal of corrosion products and adjustment of feedwater chemistry. An isolation valve and globe type flow control valve are located as close to the condenser as possible. The control valve is designed for flashing service. The control valve will be made of a flow-accelerated corrosion (FAC) resistant material, and a pressure breakdown orifice is located downstream of the flow control valve to prevent flashing at the control valve and to reduce the pressure drop across the valve.

Downstream from the common header receiving flow out of the #6 high pressure feedwater heaters, twin feedwater lines of 500A (20-inch) nominal outside diameter run to the reactor. The feedwater lines are principally seamless erosion-corrosion resistant low-alloy steel, 500 mm nominal outside diameter, and minimum wall thickness as calculated per ASME Code Section III. All control valves are made of A335 P5 or equivalent material, which material provides increased resistance to cavitation and erosion damage and minimizes the introduction of cobalt into the reactor system, similar to stainless steel, but for much less cost. The portion of each feedwater line from the RPV nozzles and running upstream out to the outboard side of the outboard containment isolation check valve is designed to ASME Code Section III, Class 1, and Seismic Category I. The further upstream portion spanning to the outboard side of the motor-operated stop valve is designed to ASME Code Section III, Class 2, and Seismic Category I. The portion of the feedwater lines upstream of that stop valve is designed to ASME/ANSI Code B31.1.

The FW piping and components inside the drywell are part of the RCPB and, therefore, are designed per ASME Code Section III, NB-3000 (Class 1) requirements (or equivalent). As with the main steamlines, the piping layout and support arrangement is optimized to minimize jet impingement impact on any nearby safety-related components. The jet impingement evaluation is normally performed by developing jet maps for each postulated break. Jet impingement impact on each identified safety-related target located within the defined jet maps is further evaluated and protective measures, such as jet shields, are provided as needed.

Inside the drywell, near the RPV, each feedwater line divides into three smaller-sized branches that ultimately run upward and then turn horizontal to connect to respective RPV feedwater line subsystem nozzles. Inside the RPV, six removable spargers each configured in a tee-arrangement are fitted into these RPV feedwater line subsystem nozzles through tight-fitting thermal sleeves, while the spargers' wing-ends are pinned to brackets provided on the interior wall of the RPV. Along the topside of the wings of these spargers are mounted a multiplicity of short gooseneck-type nozzles that face inward toward the RPV centerline, allowing the cooler feedwater to jet and mix into the separator-standpipes pool of saturated coolant that stands just atop the chimney head.

The feedwater heating system is designed to provide a final feedwater temperature of 216°C at 100% NBR. All modern BWRs have been designed to this temperature.

The maximum plant output achievable with one feedwater booster pump/feedwater pump train operating is approximately 65%.

Isolation is provided for each high pressure feedwater heater string as a whole. There is no bypass for individual feedwater heaters. No individual heater bypass is specified to avoid the large complexity of the bypass piping and valves and related heater isolation valves which is consistent with standard industry practice.

Single valve isolation is provided for parallel feedwater heater strings. Motor-operated gate valves are used to provide tight shutoff. The isolation valves are closed on detection of high level in either of the two high pressure heaters in the string to prevent overfilling the heaters in case of a tube leak. Overfilling the feedwater heaters may cause turbine damage from water entering the turbine through the feedwater heaters extraction lines.

Two feedwater isolation valves (check valves) are provided in each line penetrating the containment. These valves and associated piping are designed for water hammer pressures to prevent feedwater line breaks outside the containment.

The isolation valve inside containment is a simple check valve with no external operator. The isolation valve outside containment is a positive acting check valve with spring assisted seating. The outboard check valve is designed to prevent reverse flow without assistance from the external operator, i.e., its spring loaded operator shall not be directly connected to the disc. The operator is held open by gas pressure, supplied from the Instrument Air System, during normal operation, and upon release of gas pressure it moves into contact with the valve disc to assist in holding the disc against the seat. Solenoid valves fail open or are de-energized to relieve gas pressure to permit the spring loaded operator to release. Remote-manual operation of the valve from the control room is possible following signals indicating containment isolation is required or for testing purposes.

A motor-operated gate valve with high leaktight capability is provided outside the containment for each feedwater line upstream of the feedwater isolation valves. These valves can be remote-manually operated from the control room, following signals indicating containment isolation is required.

A connection to supply feedwater to the Zinc Injection System (zinc injection) is provided on the feedwater pump discharge piping. The discharge pressure from the reactor feedwater pumps provides the motive force for zinc injection. Zinc injection discharge is in the Condensate System.

A connection to the Turbine Building Sampling System is provided in the common feedwater heater outlet header to sample feedwater. The following parameters are continuously monitored: pH, specific conductivity, silica, sodium, dissolved oxygen, iron, and corrosion products.

The overall layout of mechanical equipment, piping, valves, instrumentation, and wiring permits expeditious performance of maintenance tasks. Pipe routing permits in-service inspection and all manually operated valves are easily accessible for operation during all modes of plant operation through the use of platforms or chain wheels.

The ESBWR has two RWCU/SDCS loops (train A, B), each of which connects to its own (inversely designated) feedwater line (line B, A). This configuration provides a higher assurance of being able to return water to the RPV if one feedwater line is being serviced during shutdown. Check valves are provided on the feedwater lines immediately upstream of the RWCU/SDCS piping connections that return RWCU/SDCS flow (and also FAPCS flow, and CRDS make up flow) back to the RPV via these feedwater lines. These check valves prevent the loss of makeup flow from a feedwater line break upstream of the connections. These check valves also inhibit thermal stratification in the feed line on low feed flow conditions.

Each pump is provided with a minimum flow recirculation line to prevent overheating of the pump. Each recirculation line will be provided with a pneumatically-operated control valve to control the recirculation flow rate and an orifice to reduce the pressure prior to returning the recirculation flow to the direct contact feedwater heater tank.

Each pump discharge line will be provided with a check valve to prevent backflow through the pump. The reactor feedwater pump check valves are specified to contain at least 0.5% chrome in all wetted parts to guard against valve failure due to corrosion/erosion. Feedwater line subsystem components are specified to preclude, when possible, the use of cobalt containing alloys such as stellite to minimize radiation levels after shutdown.

The feedwater line subsystem is designed to meet the overall plant availability target of 92%. The feedwater line subsystem consists of four pump-trains and two parallel 50% feedwater heater strings. Backup electrical supply is provided for all components. There is no single component in this system that will impact plant availability during the 60-year design life of this plant. If one pump is disabled for any reason, the remaining pumps will allow the plant to maintain operation at 100% capacity. If one heater string is isolated for any reason, the bypass lines will open to allow the plant to maintain operation at 100% capacity.

3.1.11 System Operation

The operating modes of the NBS System are:

- **Startup Mode**, which has two sub-modes:
  - Cold Startup
  - Hot Restart
- **Power Operation Mode**, which has four submodes:
  - Normal Operation
  - Final Feedwater Temperature Reduction
  - Planned Transients
  - Unplanned Transients
- **Safe Shutdown Mode**
- **Cold Shutdown Mode**
- **Refueling Mode**
- **Testing Mode**

Startup Mode

System Startup consists of Cold Startup and Hot Restart. Cold Startup begins from atmospheric pressure and ambient temperature in the RPV, and Hot Restart starts with the RPV pressurized and in hot standby condition. All components and instruments in the system are operable, and valves are aligned in open or closed position as required. The reactor mode switch is in the STARTUP position.

During startup, feedwater flow is automatically regulated by the low flow control valve (LFCV), located in the bypass line around the heaters, based on single element reactor level control.

The motor-operated gate valve located in the feedwater pump bypass line is opened to provide feedwater by the condensate pumps to the reactor pressure vessel via the LFCV while the reactor feedwater pumps are not running. This gate valve will be closed when a reactor feedwater pump is running. The feedwater pump bypass line will also be used to clean up feedwater providing a long flow path from the condensate pumps to a point downstream of heater #6 and then to the condenser via the long path cleanup line.

The reactor feedwater pump bypass valve, a motor-operated gate valve, is open with both high pressure feedwater heater strings isolated. The LFCV is modulated based on reactor level. Only one feedwater line to the reactor is open to maximize the flow through that line to minimize check valve chatter at the low flow startup condition. The cleanup water (RWCU/SDCS) flow from the reactor back to the feedwater line is maximized to reduce thermal stress at the feedwater nozzles.

When the condensate pump cannot provide enough pressure to overcome the increasing pressure in the reactor, an reactor feedwater pump is manually started. At minimum speed, the reactor feedwater pump will add approximately 620 kPa-d above the condensate header pressure. This increase in pressure will cause the check valve in the reactor feedwater pump bypass line to close forcing all flow through the reactor feedwater pump and the operator will be alerted to shut the reactor feedwater pump bypass isolation valve.

The operator manually increases the reactor feedwater pump speed to produce a differential pressure of 0.69 MPa-d across the LFCV. The reactor feedwater pump is then placed in automatic speed control. FWC then provides a speed control signal for the ASD to maintain a 0.69 MPa-d differential across the LFCV and the LFCV modulates to control reactor level. This is done to simplify operation of the LFCV. By automatically maintaining a constant pressure across the LFCV, the throttling characteristics of the LFCV remain constant.

As soon as pressurization is complete and NBR is between 5-12%, the other feedwater line to the reactor is placed in service and RWCU/SDCS flow is split between the two feedwater lines.

Before increasing above 15% NBR, the high pressure feedwater strings are put in operation, the LFCV is shut, and reactor level is controlled by varying the speed of the reactor feedwater pump.

Feedwater heating starts as soon as adequate extraction pressure is available, approximately 25% NBR.

Feedwater control is switched to three-element control when the feedwater flow is great enough to be measured accurately. In three-element control, reactor level, feedwater flow, and steam flow are input into FWC to produce a speed control signal for the reactor feedwater pumps.

The Startup Mode for ESBWR (as with SBWR) does not include a formal Hot Standby sub-mode, although the reactor can (infrequently) be operated in a conventional “hot standby” condition for some brief periods. This absence of a formal Hot Standby Submode (in which by definition the reactor is isolated and MSIVs and drain valves are closed) is principally due to the fact that the isolation condensers, that are used to remove core decay heat (or very low output core fission heat) from the reactor, are basically ON/OFF devices. Currently the ICS System design does not provide for a modulated control, as this would require highly precise control of water level (i.e., no “up-and-down” level swings) in the tubes of the IC heat exchanger in order to avoid excessive fatigue utilization in the tube material at the water/steam interface, and the means to achieve this, although technically possible, is considered to be prohibitively costly for the operational benefits obtained. When ON, and with the reactor at normal operating pressure/temperature conditions, the IC heat exchanger removes approximately 1% core NBR heat output from the reactor; when OFF, of course, 0.0%. This ON/OFF cycling for most occasions of plant Hot Standby would be occurring too rapidly because of the high thermal rejection capacity of even a single IC heat exchanger. Thus, extended hours of Hot Standby would bring about a large number of added “startup” type cycles, for which the IC heat exchanger would then have to be (but isn’t presently) designed to accommodate over its intended

60-year design lifetime. It should be noted that the RWCU/SDCS system does provide a lesser degree of reactor heat removal capacity, and it is through the regulation of the RWCU/SDCS System cleanup flow that some degree of "hot standby"-type plant operation is made available to the plant operator. And of course, when the main condenser is available, then the plant can be operated in the "quasi-Hot-Standby" mode where core decay or core fission heat is being rejected through the main steam bypass valves.

Power Operation Mode

Power Operation consists of normal operation, planned transients and unplanned transients. Power Operation is the condition at the end of Startup followed by switching the reactor mode switch to the RUN position or the condition following a planned or unplanned transient which does not scram the reactor.

Normal Operation

During **Normal Operation**, steam at rated condition is transported through the main steamlines to the main turbine. All technical specification required components and instruments in the system are operable, and are aligned as required for system operation. The reactor mode switch is in the RUN position. [Actions required by technical specifications will govern when the required components and instruments for system operation are not all operable (i.e., temporarily inoperable or out-of-service)].

During power operation, feedwater flow is automatically controlled by the reactor feedwater pump speed set by the Feedwater Control System (FWCS System). The FWCS System utilizes a three-element control scheme using steam flow out of the reactor, feedwater flow into the reactor, and reactor water level to regulate the reactor feedwater pump speed.

Final Feedwater Temperature Reduction

The feedwater line subsystem is designed to allow for final feedwater temperature reduction operation at the end of the fuel cycle for cycle extension. This operating mode offers operating flexibility and improved fuel cycle economics. During final feedwater temperature reduction operation, the low flow control valve located in the bypass line around the heaters, works in parallel with the heater bypass control valve to lower the feedwater temperature to the reactor. The bypass valves modulate to maintain an operator selected feedwater temperature. When the bypass line reaches its design flow, the isolation valves in the extraction lines to the sixth stage of heaters are closed. The high pressure feedwater heater bypass line is then used to ramp the feedwater temperature down again. Finally, the extraction isolation valves for the fifth stage of heaters are isolated.

During high pressure feedwater heater string isolation operation, flow through the remaining heater string is controlled by using the LFCV and heater bypass control valves to maintain a set differential pressure across the heater string.

Planned Transients

The **Planned Transients** submode includes such transients as Reductions (Increases) in Power, Rod Pattern Changes, and Reduction to 0% Power, and includes the end-state submode ordinarily termed Hot Standby (see discussion above, however, under **Startup Mode**), where the reactor has been brought to subcritical from a prior condition of being critical and generating power. In ESBWR, because of its natural recirculation design basis, reductions in NBS System operating power level are performed by changes in control rod pattern within the core cells known as the "control cells". These are cells fairly regularly arrayed over the entire core and in which the control blade in that cell is partially withdrawn from the core, whereas in all other cells the control blades are either fully inserted or fully withdrawn.

Power-adjusting transients known as Reductions in Power which end with NBR output in the range 100% <= P <= 50% NBR output have no effect on main steamlines operation. Reductions in Power to 40% NBR and below results in automatic opening of the motor-operated bypass/drain line valves to the main condenser.

A minimum transient feedwater flow capacity of 115% is provided to maintain sufficient margin to a reactor scram on low reactor level. The 115% transient capacity for 10 seconds is provided to prevent unnecessary actuation of the emergency core cooling systems on low reactor level.

After a turbine trip, the pressure in the reactor increases and collapses the steam voids in the reactor core and chimney region, lowering reactor water level. Feedwater flow increases to 115% NBR to maintain reactor level for at least 10 seconds to avoid a low level scram. Then reactor water level starts to increase rapidly since feedwater flow rate is at 115% NBR and the reactor is only steaming at 33% NBR (main steam bypass capacity). The feedwater flow rate is then lowered to prevent overfilling the reactor.

The maximum feedwater runout capacity will not exceed 175% nuclear boiler rated (NBR) against a vessel pressure of 7.34 MPa-gauge. The 175% maximum runout capacity is used to establish reactor core thermal limits for the case of feedwater controller failure to maximum demand.

Continuous long-term 100% plant operation is possible with one reactor feedwater booster pump/feedwater pump train out of service.

The system is designed to isolate a string of high pressure feedwater heaters in the event high water level is detected in any heater shell in that string. If a string of heaters is isolated by the feedwater isolation valves, the extraction non-return valves and isolation valves for the associated heaters will automatically close, and the heater string bypass valves will open as required to maintain full feedwater flow.

The ESBWR reactor feedwater pumps trip at Level 9 reactor water level (a level above the reactor high level alarm) to prevent water from entering the main steamlines. A flow runback occurs if reactor water level reaches Level 8.

Unplanned (Analyzed) Transients (Upset and Emergency)

- Upset - Loss of AC Power While in Hot Standby
- Upset - Inadvertent Closure of All MSIVs
- Upset - Inadvertent Closure - One MSIV
- Upset - Inadvertent Open/Reclose of Individual SRV (No Blowdown)
- Upset - Single SRV Opens - Depressurization
- Upset - Turbine Trip
- Upset - Generator Load Rejection
- Upset - Pressure Regulator Failure - Open
- Upset - Loss of All Feedwater
- Upset - Feedwater Controller Fails - Maximum
- Upset - Loss of Condenser Vacuum
- Emergency - Reactor Overpressure - Backup Scram
- Emergency - Inadvertent ADS Depressurization

The feedwater line subsystem including its controls is designed so that no single operator error or equipment failure will cause the loss of more than 55.6 C feedwater heating. The loss of 55.6 C feedwater heating is one transient, which determines the operating critical power ratio (CPR) limit.

Safe Shutdown Mode

The normal process of shutting down the NBS System (as distinct from shutting down reactor power generation operations) starts with the reactor in the beginning of the "hot standby" condition and with all control rods inserted. The reactor mode switch is placed in the SHUTDOWN position and the reactor is depressurized.

The reactor is brought to a Safe Shutdown Mode using safety-related systems exclusively--in this case for ESBWR, the Isolation Condenser System. This is a regulatory authority-driven design mode, the merit of which is to show the ESBWR design contains overall safety margins in the absence (in ESBWR) of Class 1E AC-powered active cooling systems.

When the reactor has reached the quasi-equilibrium condition (in 36 hours) of 204°C , it is in the mode termed Safe Shutdown Mode.

Cold Shutdown Mode

Normally the reactor is brought down from the hot standby condition by steam bypass to the main condenser via partially opening one or more turbine bypass valves. Reactor coolant is flashed to steam which flows through the main steamlines and the bypass valves. NSSS cooldown is carefully controlled so that it does not exceed 55.6 °C/hr cooldown rates. The Reactor Water Cleanup/Shutdown Cooling System (RWCU/SDCS System), with its adjustable speed pumps running at below-rated rpm, provides a small assist to this cooling. When the reactor pressure has reached approximately the pressure at which turbine gland sealing steam is no longer effective at maintaining vacuum in the main condenser (i.e., at 1.1 MPa, or , more or less), the RWCU/SDCS pumps gradually are increased to increase RWCU/SDCS System process flow, and bypasses of steam to the condenser are terminated. The reactor continues to be cooled, reaching the state known as Cold Shutdown Mode once reactor coolant has reached temperatures of 100 °C or less.

Refueling Mode

The reactor is considered to be in this Cold Shutdown Mode only while fuel remains in the reactor vessel and RPV head closure bolts are fully tensioned. As the reactor undergoes further activities (stud detensioning) leading to removing the RPV top head in the front part of the bi-annual refueling/maintenance outage, the reactor then becomes classified as being in the Refueling Mode. The reactor mode switch will be in the REFUELING position when the reactor is in the Refueling Mode.

Testing Mode

Periodic testing of the main steamline subsystem is performed during normal plant operation. When a test is underway, the reactor is classified as being in the Testing Mode. These tests are covered in section 4.1.6 below.

3.1.12 Trip Setpoints

Over the years BWR designers have come to adopt a set of terms relating to RPV water level and corresponding trip actions that (where applicable) occur during transients and/or accidents when the reactor mode switch is in any position other than the REFUELING position. These terms utilize the expression “Reactor Vessel Water Level -X”, where X is a number between 0 to 9 (and where not all integer numbers in this range are necessarily used in every reactor design). Familiarity with these terms among reactor design personnel and also plant operators brings the short-cut expression “Level-X” into use when occurrence of an RPV water level condition is being referred to.

Refer to Section 2.8 for a discussion of water level actions.

3.1.13 Testing and Inspection Requirements

Testing

Testing provisions are provided in the design for initial and periodic testing of the ASME Code Class 1 and 2 system equipment, including hydrotest per requirements of ASME Code Section III and USNRC Reg Guide 1.22.

Before system startup, the main steamlines from the RPV up to the inboard MSIVs are hydrotested to assure system pressure integrity.

The MSIVs are functionally tested in the fast closing mode before system startup and thereafter, at a quarterly intervals to verify that the MSIVs are capable of providing main steamline isolation and leakage tightness in accordance with the requirements of 10CFR50, Appendix J.

A slow partial-closure test of all four MSIVs (one MSIV at a time), will be stoke-tested (up to 10% close) monthly to demonstrate operability of the MSIV switches that provide MSIV position scram signals to the Reactor Protection System (RPS). These tests require that the power level in the reactor be reduced to within the limits established during the initial plant power ascension test; this partial-closure testing is ordinarily performed during night-time operation when grid power demands are at daily lows.

SRV in-service tests are performed periodically in accordance with plant technical specifications to assure that the valves are capable of performing their intended functions. SRV safety function setpoints are verified at 24-month intervals for half of the SRVs in the main steamlines per plant technical specification requirements, and each SRV is opened manually at 18 month intervals on a staggered test basis. Nitrogen supply pressure for the SRVs is verified at 31 day intervals to assure that the valves are capable of performing their intended functions. Because the springs causing disk-closure following SRV actuation are quite strong and (if backpressure in the NSSS is not high) can lead to sharp re-closings, SRV in-service tests will generally not be performed unless the reactor pressure is greater than 5.5 MPa-gauge (800 psig) in order to minimize the potential for valve seat damage and subsequent SRV leakage.

The SRV discharge pipeline vacuum breakers are tested for operability and closure per plant technical specifications at periodic intervals. The main steamline instrumentation is surveillance tested per plant technical specifications at periodic intervals.

Inspection

ISI accessibility is provided by a well considered arrangement of piping and major equipment and an accessible arrangement of vents and drains in the system to meet the ASME Code Section XI requirements for performance of ISI and testing for assessing operational readiness.

Pipe bends are used in the design to minimize the number of welds in the piping system. Piping requiring ISI inspections is arranged to have welds pre-shaped to allow more efficient

inspections, with rapid removable, and reusable insulation coverings. All welds are completed with baseline Ultrasonic Test (UT) signatures established.

3.1.14 Instrumentation Requirements

NBS System instrumentation is designed and arranged to monitor system parameters and provide operational status of the system. The following paragraphs describe key NBS System instrumentation features.

Four divisions of reactor water level and pressure instruments are provided in the NBS System. The safety-related logic functions of the NBS System are assigned to the Safety System & Logic Control System (SSLC System), again in four redundant logic divisions. NBS System sensors that serve the plant protection and safety systems are either hardwired or multiplexed to SSLC control room cabinets.

The instruments that sense the water level are temperature compensated differential pressure devices calibrated for specific RPV pressure and temperature conditions. Instrument "zero" for the RPV water level ranges is at the top of active fuel (TAF).

Each instrument line connecting into a steam space region of the RPV utilizes a dedicated condensing chamber to facilitate establishing a stable reference water leg for differential pressure measurements used for water level measurement. RPV water level instrument reference lines are supplied with CRD water to maintain the reference lines in a full condition at all time. This is to address the effects of noncondensable gases in the instrument lines and to prevent erroneous reference information. Instrument piping which connects to these condensing chambers for reactor vessel water level measurement is routed downward with a continuous slope of > 1/25 [40 mm/m)] of run and with a total drop to the containment wall of < 0.91m . This is to minimize level indication errors caused by the high drywell temperature event per NRC Generic Letter No. 84-23, dated 10/26/84, "Reactor Vessel Level Instrumentation in BWRs".

Two wide range water level transmitters are provided to monitor the RPV water level in the area between the elevation above the main steamline centerline and the elevation below TAF for each of the four instrument line divisions.

One narrow range water level transmitter is provided to monitor the RPV water level in the area between the elevation above the main steamline centerline and the elevation below steam dryer skirt for each of the four instrument line divisions.

One fuel zone water level transmitter is provided to monitor the RPV water level in the fuel zone area for each of the two instrument line divisions. One shutdown water level transmitter is provided to monitor the RPV water level in the shutdown range.

An expansion leg is provided in the instrument line between the condensing pot and the watertight penetration in the refueling bellows seal area to allow for maximum change of vessel length with temperature to avoid overstressing the piping or seal or damage to insulation around the vessel top head area.

A flow-limiting orifice is provided inboard of the containment boundary, and an excess-flow check valve outboard of the containment boundary, on each instrument line connected to the RCPB to limit the flow from the line in case of an instrument line break.

Pressure transmitters with local pressure indications are provided to monitor the RPV condition for each instrument line division.

The main steamline flow restrictor is used to measure steam flow and to initiate closure of the MSIVs when the steam flow exceeds pre-selected operational limits. The RPV dome pressure and the venturi throat pressure are used as the high and low pressure sensing locations, respectively.

Instrumentation is provided for detecting leakage through the SRVs, the RPV closure head flange, and the RPV head vent line. The SRV discharge pipeline temperature elements are located at a sufficient distance from the SRV outlet flange to avoid overheating of the temperature elements by heat conducted from the hot valve body during normal plant operation. These SRV discharge pipelines are not insulated, in order to avoid these temperature elements from running hot, which potentially could give incorrect SRV leakage indications.

Level switches are provided in the drip legs in the turbine island piping to initiate operation of the automatic drain valves. The automatic drain valves are provided with an orificed bypass line. The orificed bypass line provides continuous drainage of condensate collected in the drip legs, to preclude cycling of the automatic drain valve. The orifice bypass drain line remains open at all times.

Radiation, from the main steamlines, is measured by radiation monitors. These are physically located near the main steamlines, just downstream of the outboard MSIVs. This measurement is made to detect significant increases in radiation level with any number of main steamlines in operation. The gamma sensitive radiation monitors are assigned to the Process Radiation Monitoring System (PRMS System), and high radiation level signals are transmitted to the RPS to initiate reactor scram and to the Leak Detection & Isolation System (LD&IS System) to initiate closure of all MSIVs and the main steamline drain valves.

Instrumentation is included for ASME PTC 6.1, Interim Test Code for Steam Turbines.

The RPV is outfitted with outside surface (metal) temperature sensors to measure temperatures at the head flange and the bottom head locations.

Controls for the NBS System are located in the main control room (MCR) to facilitate system operation. System and component operating status, including the state of any bypasses or manual overrides, are provided at the main control console (MCC). Manual initiation and shutdown of the NBS System is provided from the MCR.

The feedwater temperature in each feedwater line downstream of the high pressure feedwater heater header is measured with redundant temperature elements to determine the reactor feedwater inlet temperature and to monitor the temperature difference. These temperature elements are also used as part of the control scheme used for reducing the final

feedwater temperature at the end of the plant/fuel cycle. Final feedwater heater temperature is also used by the Feedwater Control System to calculate "loss of feedwater heating."

Each feedwater line downstream of the high pressure feedwater heater header is supplied with a flow element to determine the total feedwater supply to the reactor. Each flow element uses two flow transmitters. The signals from these flow transmitters are used by the Feedwater Control System to control reactor level by adjusting the reactor feedwater pump speed. Connections upstream and downstream of the flow element allow on-line calibration.

A flow element is located in each feedwater line subsystem feedwater booster pump suction and in each feedwater pump suction to monitor and control the respective pump flow rate, and thereby automatically control minimum recirculation flow. A flow element is located in each feedwater pump discharge to test and monitor pump flow.

3.2 Control Rod Drive System

3.2.1 Description and Functioning of System

The Control Rod Drive System (CRDS) controls changes in core reactivity during power operation by movement and positioning of the neutron absorbing control rods within the core in fine increments in response to control signals from the Rod Control and Information System (RCIS). The CRD System provides rapid control rod insertion (scram) in response to manual or automatic signals from the Reactor Protection System (RPS).

When scram is initiated by the RPS, the CRD system inserts the negative reactivity necessary to shut down the reactor. Each control rod is normally driven by an electric motor unit. When a scram signal is received, high-pressure water stored in nitrogen charged accumulators forces the control rods into the core. The scram signal also activates the motor run-in. Thus, the hydraulic scram action is backed up by an electrically energized insertion of the control rods.

The CRD System consists of three major elements: (1) the electro-hydraulic fine motion control rod drive (FMCRD) mechanisms, (2) the hydraulic control unit (HCU) assemblies, and (3) the control rod drive hydraulic system. The FMCRDs provide electric-motor-driven positioning for normal insertion and withdrawal of the control rods and hydraulic-powered rapid control rod insertion (scram) for abnormal operating conditions. Simultaneous with scram, the FMCRDs also provide electric-motor driven run-in of control rods as a path to rod insertion that is diverse from the hydraulic-powered scram. The hydraulic power required for scram is provided by high pressure water stored in the individual HCUs. An HCU can scram two FMCRDs. It also provides the flow path for purge water to the associated drives during normal operation. The Control Rod Drive Hydraulic System supplies pressurized water for charging the HCU scram accumulators and purging to the FMCRDs. Additionally, the CRD System provides high pressure makeup to the reactor during events in which the feedwater system is unable to maintain reactor water level. This makeup water is supplied to the reactor via a bypass line off the CRD pump discharge header which connects to the feedwater inlet piping via the reactor water cleanup/shutdown cooling return piping.

The CRD System performs the following functions:

1. Controls changes in core reactivity by positioning neutron-absorbing control rods within the core in response to control signals from the Rod Control and Information System (RCIS).

2. Provides movement and positioning of control rods in increments to enable optimized power control and core power shape in response to control signals from the RCIS.

3. Provides the ability to position large groups of rods simultaneously in response to control signals from the RCIS.

4. Provides rapid control rod insertion (scram) in response to manual or automatic signals from the Reactor Protection System (RPS) so that no fuel damage results from any plant transient.

5. In conjunction with the RCIS, provides automatic electric motor-driven insertion of the control rods simultaneously with hydraulic scram initiation. This provides an additional, diverse means of fully inserting a control rod.

6. Supplies rod status and rod position data for rod pattern control, performance monitoring, operator display and scram time testing by the RCIS.

7. In conjunction with the RCIS, prevents undesirable rod pattern or rod motions by imposing rod motion blocks in order to protect the fuel.

8. In conjunction with the RCIS, prevents the rod drop accident by detecting rod separation and imposing rod motion block.

9. Provides alternate rod insertion (ARI), an alternate means of actuating hydraulic scram, should an anticipated transient without scram (ATWS) occur.

10. In conjunction with the RCIS, provides for selected control rod run-in (SCRRI) to mitigate the loss of feedwater heating event.

11. Prevents rod ejection by means of a passive brake mechanism for the FMCRD motor and a scram line inlet check valve.

12. Supplies high pressure makeup water to the reactor when the normal makeup supply system (feedwater) is unable to prevent reactor water level from falling below reactor water Level 2.

13. Supplies purge water for the RWCU/SDC pumps.

3.2.2 Design Bases

3.2.2.1 Safety Design Bases

1. The design shall provide for rapid control rod insertion (scram) so that no fuel damage results from any moderately frequent event.

2. The design shall include positioning devices, each of which individually supports and positions a control rod.

3. Each positioning device shall be capable of holding the control rod in position and preventing it from inadvertently withdrawing outward during any non-accident, accident, post-accident and seismic condition.

4. Each positioning device shall be capable of detecting the separation of the control rod from the drive mechanism to prevent a rod drop accident.

5. Each positioning device shall provide a means to prevent or limit the rate of control rod ejection from the core due to a break in the drive mechanism pressure boundary. This is to prevent fuel damage resulting from rapid insertion of reactivity.

3.2.2.2 Plant Investment Protection Design Bases

1. The design shall provide for controlling changes in core reactivity by positioning neutron-absorbing control rods within the core.
2. The design shall provide for movement and positioning of control rods in increments to enable optimized power control and core power shaping.
3. The design shall provide for the supply of high pressure makeup water to the reactor when the normal makeup supply system (feedwater) is unable to maintain water level.

3.2.3 Fine Motion Control Rod Drives

The ESBWR FMCRDs are distinguished from the locking piston control rod drives (LPCRD) in that the control blades are moved electrically during normal operation. The LPCRDs are used in most BWR's prior to the ABWR, which uses the FMCRD. The electric movement and control feature permits small power changes, improved startup time, and improved power maneuvering. The FMCRD, as with the LPCRD, is inserted into the core hydraulically during emergency shutdown. Because the FMCRD has the additional electrical motor, it drives the control blade into the core even if the primary hydraulic system fails to do so, thus providing an additional level of protection against Anticipated Transient Without Scram (ATWS) events.

The FMCRD design is an improved version of similar drives that have been in operation in European BWRs since 1972. A total of 2,600 of these drives have accumulated about 35,000 drive years of experience during which time there have been no plant outages due to a FMCRD mechanical failure. Additionally, an extensive test and development program was undertaken to demonstrate the reliability of the FMCRD used in the ABWR, including an in-reactor test for over one year at an operating nuclear plant in the U.S.

The FMCRD design used in the ESBWR is identical to that design currently used in the ABWR except for the stroke length. Since the core of the ESBWR is about 83% of the height of the ABWR core, the control rod is about 83% as long and the drive stroke is also about 83%. The shorter drive is summarized in Table 3.2-1. All other features of the drive are the same.

The control rod for the ESBWR has a wider span or width than the ABWR, due to the adaptation of the F lattice (refer to Sections 2.1 and 2.2) but it is not as long. Therefore the weight of the ESBWR control rod is heavier than the weight of the ABWR control rod. This excess weight can be easily accommodated due to the shorter stroke and slower scram speed.

Table 3.2-1

Core & Drive Features	ABWR	ESBWR
Fuel Length	3708 mm	3048 mm
Control Rod Length	3632 mm	2896 mm
Drive Stroke	3660 mm	2921 mm
Control Rod Weight		
All B_4C	83 kg	119 kg
Hafnium	104 kg	150 kg

Figure 3.2-1 shows a cross-section of the FMCRD as used in ESBWR. The FMCRD consists of four major subassemblies: the drive, the spool piece, the brake and the motor/synchros. The spool piece and motor may be removed without disturbing the drive and this allows maintenance with low personnel exposure.

The FMCRD used for positioning the control rod in the reactor core is a mechanical/hydraulic actuated mechanism (Figures 3.2-1 and 3.2-2). An electric motor-driven ball-nut and spindle assembly is capable of positioning the drive at a minimum of 18.3 mm increments. Hydraulic pressure is used for scrams. The FMCRD is contained in a housing which penetrates the bottom head of the reactor pressure vessel. The FMCRD does not interfere with refueling and is operative even when the head is removed from the reactor vessel.

The use of the FMCRD mechanisms in the CRD System provides several features which enhance both the system reliability and plant operations. Some of these features are listed and discussed briefly as follows:

1. Diverse Means of Rod Insertion

The FMCRDs can be inserted either hydraulically or electrically. In response to a scram signal, the FMCRD is inserted hydraulically via the stored energy in the scram accumulators. A signal is also given simultaneously to insert the FMCRD electrically via its motor drive. This diversity provides a high degree of assurance of rod insertion on demand.

2. Absence of FMCRD Piston Seals

The FMCRD pistons have no seals that require periodic drive removal for maintenance; the FMCRD internals can remain in place for their full design life. Only a sample of two or three complete FMCRDs are planned to be removed for inspection each refueling outage to document drive condition. This is an order of magnitude reduction compared to previous BWR product lines, using the locking piston CRD (LPCRD), in which 20 to 30 complete drives are removed for piston seal replacement each refueling outage.

3. FMCRD Discharge

The water which scrams the control rod discharges into the reactor vessel and does not require a scram discharge volume, thus eliminating a potential source for common mode scram failure.

4. Plant Maneuverability

The fine motion capability of the FMCRD allows rod pattern optimization in response to fuel burnup or load-following demands. Such a feature allows the ability to load follow.

5. Plant Automation

The relatively simple logic of the FMCRD permits plant automation. This feature is utilized for automatic reactor startup and shutdown and for automatic load following.

6. Reactor Startup Time

The FMCRDs can be moved in large groups. Movements of large groups of control rods (called gangs) are utilized to reduce the time for reactor startup.

7. Rod Drop Accident Prevention

The control rod separation detection feature of the FMCRD virtually eliminates the possibility of a Rod Drop Accident (RDA) by preventing rod withdrawal when control rod separation is detected. Additionally, movement of rods in large groups during reactor startup greatly reduces the maximum relative rod worth to levels lower than current rod pattern controls. Rod pattern controls are retained in order to verify proper automatic rod movements and to mitigate the consequences of a rod withdrawal error.

The drives are readily accessible for inspection and servicing. The bottom location makes maximum utilization of the water in the reactor as a neutron shield and gives the least possible neutron exposure to the drive components. Using water from the condensate treatment system and/or condensate storage tanks as the operating fluid eliminates the need for special hydraulic fluid.

3.2.4 FMCRD Components

Figure 3.2-1 provides a simplified schematic of the FMCRD operating principles. Figure 3.2-2 illustrates the drive in more detail.

The basic elements of the FMCRD are as follows:

1. Components of the FMCRD required for electrical rod positioning or fine motion control (including the motor, brake release, associated connector, ball screw shaft, ball-nut and hollow piston).
2. Components of the FMCRD required for hydraulic scram (including hollow piston and buffer).
3. Components of the FMCRD required for pressure integrity (including the middle flange, installation bolts and spool piece).
4. Rod position indication (position synchronizing signal generators).
5. Reed position switches for scram surveillance.
6. Control rod separation detection devices (dual Class 1E CRD separation switches).
7. Bayonet coupling between the drive and control rod.
8. Brake mechanism to prevent rod ejection in the event of a break in the FMCRD primary pressure boundary, and ball check valve to prevent rod ejection in the event of a failure of the scram insert line.
9. Integral internal blowout support (to prevent CRD blowout).
10. FMCRD seal leak detection system.

These features and functions of the FMCRD are described below.

3.2.4.1 Components for Fine Motion Control

The fine motion capability is achieved with a ball-nut and spindle arrangement driven by an electric stepping motor. The ball-nut is keyed to the guide tube (roller key) to prevent its rotation, and it traverses axially as the spindle rotates. A hollow piston rests on the ball-nut and upward motion of the ball-nut drives the control rod into the core. The weight of the control rod keeps the hollow piston and ball-nut in contact during withdrawal.

The drive motor, located outside the pressure boundary, is connected to the spindle by a drive shaft. The drive shaft penetrates the pressure boundary and is sealed by conventional packing. A splined coupling connects the drive shaft to the spindle. The lower half of the splined coupling is keyed to the drive shaft and the upper half keyed to the spindle. The tapered end of the drive shaft fits into a conical seat on the end of the spindle to keep the two axially aligned. The entire weight of the control rod and drive internals is carried by a drive shaft thrust bearing located outside the pressure boundary.

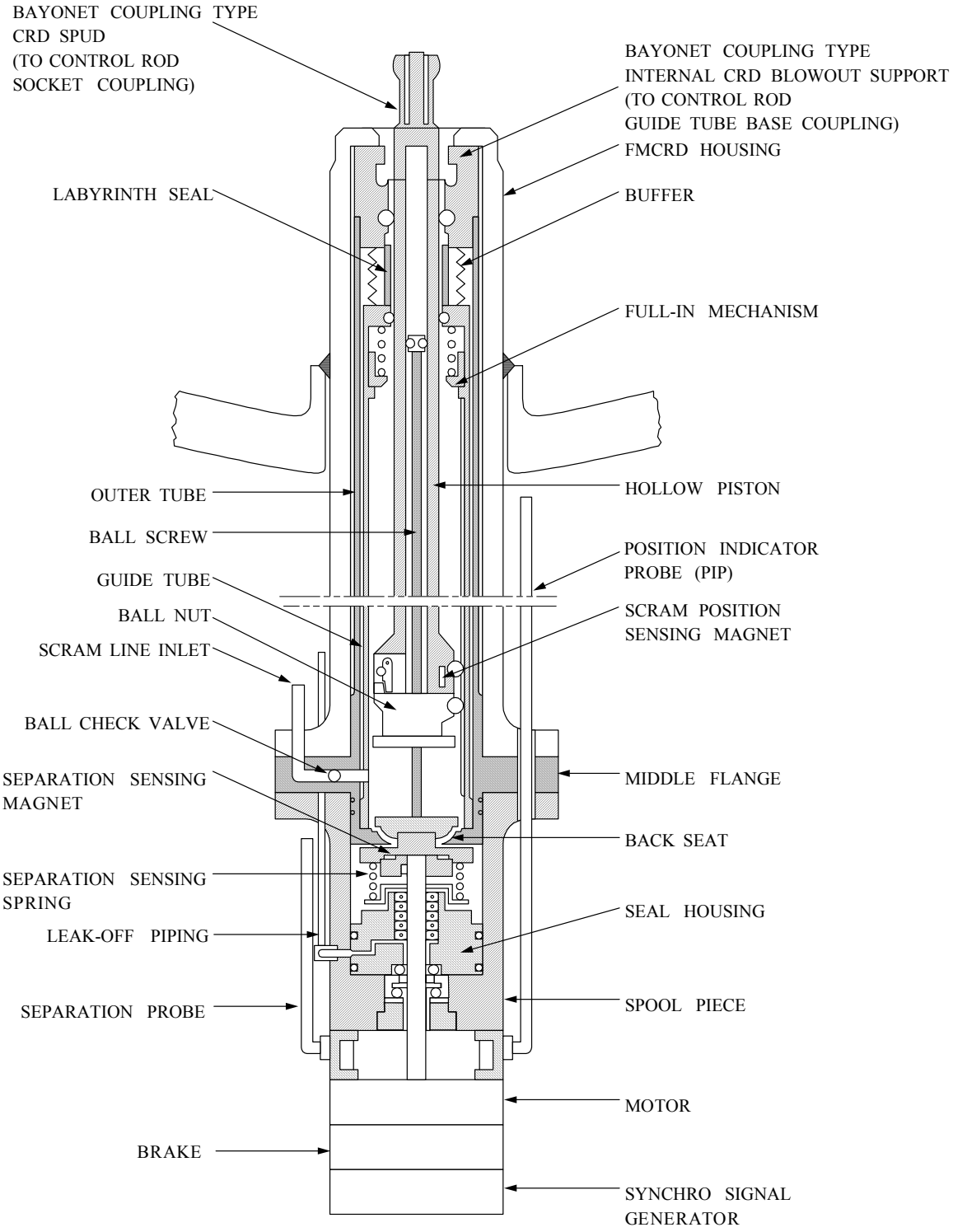

Figure 3.2-1 Fine Motion Control Rod Drive Schematic

NO.	MAIN PART NAME
1	FLANGE
2	DRIVE SHAFT
3	BEARING
4	GLAND PACKING
5	SPRING (FOR GLAND PACKING)
6	SPOOL PIECE
7	BALL SCREW SHAFT
8	NUT AND BALL
9	GUIDE ROLLER AND PIN (FOR NUT)
10	GUIDE SHAFT
11	GUIDE SHAFT BUSH
12	SPRING (FOR LOAD DETECT MECHANISM)
13	MAGNET
14	BUFFER SPRING
15	BUFFER SLEEVE
16	GUIDE ROLLER, PIN
17	BUFFER CONE
18	HOLLOW PISTON
19	PISTON HEAD
20	LATCH
21	LATCH SPRING
22	SPUD
23	COMPRESSION ROD
24	GUIDE TUBE
25	OUTER TUBE
26	FLANGE
27	CHECK VALVE VALL
28	RUBBER SEAL
29	O RING SEAL (BETWEEN CRD HOUSING AND CRD)
30	CRD MOUNTING BOLT

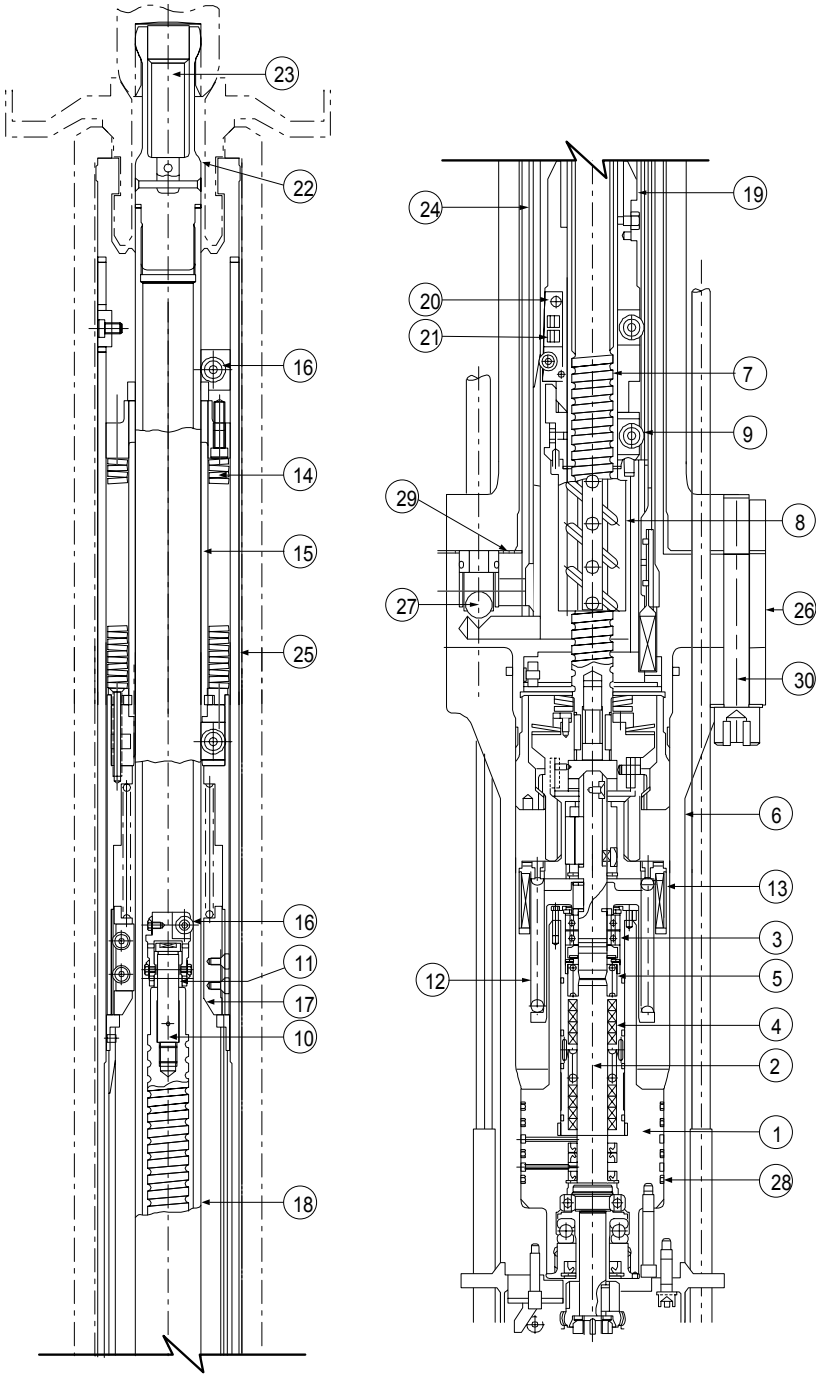

Figure 3.2-2 Fine Motion Control Rod Drive Details

The axially moving parts are centered and guided by radial rollers. The ball-nut and bottom of the hollow piston include radial rollers bearing against the guide tube. Radially adjustable rollers at both ends of the labyrinth seal keep the hollow piston precisely centered in this region.

The top of the rotating spindle is supported against the inside of the hollow piston by a stationary guide. A hardened bushing provides the circumferential bearing between the rotating spindle and stationary guide. Rollers of the guide run in axial grooves in the hollow piston to prevent the guide from rotating with the spindle.

3.2.4.2 Components for Scram

The scram action is initiated by the HCU. High-pressure water lifts the hollow piston off the ball-nut and drives the control rod into the core. A spring washer buffer assembly stops the hollow piston at the end of its stroke. Departure from the ball-nut releases spring-loaded latches in the hollow piston that engage slots in the guide tube. These latches support the control rod in the inserted position.

The control rod cannot be withdrawn until the ball-nut is driven up and engaged with the hollow piston. Stationary fingers on the ball-nut cam the latches in the hollow piston out of the slots in the guide tube and hold them in the retracted position when the ball-nut and hollow piston are re-engaged.

Re-engagement of the ball-nut with the hollow piston following scram is automatic. Simultaneous with the initiation of the hydraulic scram, each FMCRD motor is signaled to start in order to cause movement of the ball-nut upward until it is in contact with the hollow piston. This action completes the rod full-in insertion and leaves the drives in a condition ready for restarting the reactor. With the latches in the hollow piston retracted, the permanent magnets in the stepping motor provide the holding torque to maintain the control rods fully inserted in the core. When the motor and brake are de-energized, the passive holding torque from the brake keeps the rods fully inserted.

The automatic run-in of the ball-nut, using the electric motor drive, following the hydraulic scram provides a diverse means of rod insertion as a backup to the accumulator scram. The components for scram that are classified as safety-related within the drive are the hollow piston, latches, guide tube and brake.

3.2.4.3 FMCRD Pressure Boundary

The CRD housing (attached to the RPV) and the CRD middle flange and lower housing (spool piece) which enclose the lower part of the drive are a part of the reactor pressure boundary (Figure 3.2-1). The middle housing is attached to the CRD housing by four threaded bolts. The spool piece is, in turn, held to the middle housing and secured to the CRD housing by a separate set of eight main mounting bolts which become a part of the reactor pressure boundary. This arrangement permits removing the lower housing, drive shaft and seal assembly without disturbing the rest of the drive. Removing the lower housing transfers the weight of the driveline from the drive shaft to the seat in the middle housing. Both the spindle and drive shaft are locked to prevent rotation while the two are separated.

The part of the drive inserted into the CRD housing is contained within the outer tube. The outer tube is the drive hydraulic scram pressure boundary, eliminating the need for designing the CRD housing for the scram peak pressure. The outer tube is welded to the middle flange at the bottom and is attached at the top with the CRD blowout support, which bears against the CRD housing. The blowout support and outer tube are attached by slip-type connection that accounts for any slight variation in length between the drive and the drive housing.

Purge water continually flows through the drive. The water enters through the ball check valve in the middle housing and flows around the hollow piston into the reactor. Conventional packing seals the drive shaft and O-rings seal the lower housing. A labyrinth seal near the top of the drive restricts the flow into the reactor. During a scram, the labyrinth seals the high-pressure scram water from the reactor vessel without adversely affecting the movement of the hollow piston.

[[{3}

{3}]]

More detail of the sealless, magnetic coupling will be provided in the Safety Analysis Report.

3.2.4.4 Rod Position Indication

Control rod position indication is provided by the FMCRDs to the control system by a position detection system, which consists of position detectors and position signal converters.

Each FMCRD provides two position detectors, one for each control system channel, in the form of synchronizing signal generators directly coupled to the stepping motor shaft through gearing. The output signals from these generators are analog. The analog signals are converted to digital signals by position signal converters. This configuration provides continuous detection of rod position during normal operation.

3.2.4.5 Scram Position Indication

Scram position indication is provided by a series of magnetic reed switches to allow for measurement of adequate drive performance during scram. The magnetic switches are located at intermediate intervals over 60% of the drive stroke. They are mounted in a probe, external to the drive housing. A magnet in the hollow piston trips each reed switch in turn as it passes by.

As the bottom of the hollow piston contacts and enters the buffer, a magnet is lifted which operates a reed switch, indicating scram completion. This continuous full-in indicating switch is shown conceptually in Figure 3.2-3. It provides indication whenever the drive is at the full-in latched position or above.

3.2.4.6 Control Rod Separation Detection

Two redundant and separate Class 1E switches are provided to detect the separation of the hollow piston from the ball-nut. This means two sets of reed switches physically separated from one another with their cabling run through separate conduits. The separation switch is classified Class 1E, because its function detects a detached control rod and causes a rod block, thereby preventing a rod drop accident. Actuation of either switch also initiates an alarm in the control room.

The principle of operation of the control rod separation mechanism is illustrated in Figure 3.2-4. During normal operation, the weight of the control rod and hollow piston resting on the ball-nut causes the spindle assembly to compress a spring on which the lower half of the splined coupling between the drive shaft and spindle assembly rests (the lower half of the splined coupling is also known as the “weighing table”). When the hollow piston separates from the ball-nut, or when the control rod separates from the hollow piston, the spring is unloaded and pushes the weighing table and spindle assembly upward. This action causes a magnet in the weighing table to operate the Class 1E reed switches located in a probe outside the lower housing.

3.2.4.7 Bayonet Couplings

There are two bayonet couplings associated with the FMCRD. The first is at the FMCRD/control rod guide tube/housing interface as illustrated in Figure 3.2-7. This bayonet locks the FMCRD and the base of the control rod guide tube to the CRD housing and functions to retain the control rod guide tube during normal operation and dynamic loading events. The bayonet also holds the FMCRD against ejection in the event of a hypothetical failure of the CRD housing weld. The control rod guide tube opening in the core plate that engages the top of the cruciform shaped control rod guide tube and the bolt pattern on the FMCRD/housing flange assure proper orientation between the control rod guide tube and FMCRD to assure that the bayonet is properly engaged.

The second bayonet coupling is located between the control rod and FMCRD, as shown on Figure 3.2-5. The coupling spud at the top end of the FMCRD hollow piston engages and locks into a mating socket at the base of the control rod. The coupling requires a 45° rotation for engaging or disengaging. Once locked, the drive and rod form an integral unit that can only be unlocked manually by specific procedures before the components can be separated.

3.2.4.8 FMCRD Brake and Ball Check Valve

The FMCRD design incorporates an electromechanical brake (Figure 3.2-6) keyed to the motor shaft. The brake is normally engaged by spring force when the FMCRD is stationary. It is disengaged for normal rod movements by signals from the RCIS. Disengagement is caused by the energized magnetic force overcoming the spring load force. The braking torque of 49 N×m (minimum) between the motor shaft and the CRD spool piece is sufficient to prevent control rod ejection in the event of failure in the pressure-retaining parts of the drive mechanism. The brake is designed so that its failure will not prevent the control rod from rapid insertion (scram).

The electromechanical brake is located between the stepping motor and the synchronizing signal generators. The stationary spring-loaded disk and coil assembly are contained within the brake mounting bolted to the bottom of the stepping motor. The rotating disk is keyed to the stepping motor shaft and synchro shaft.

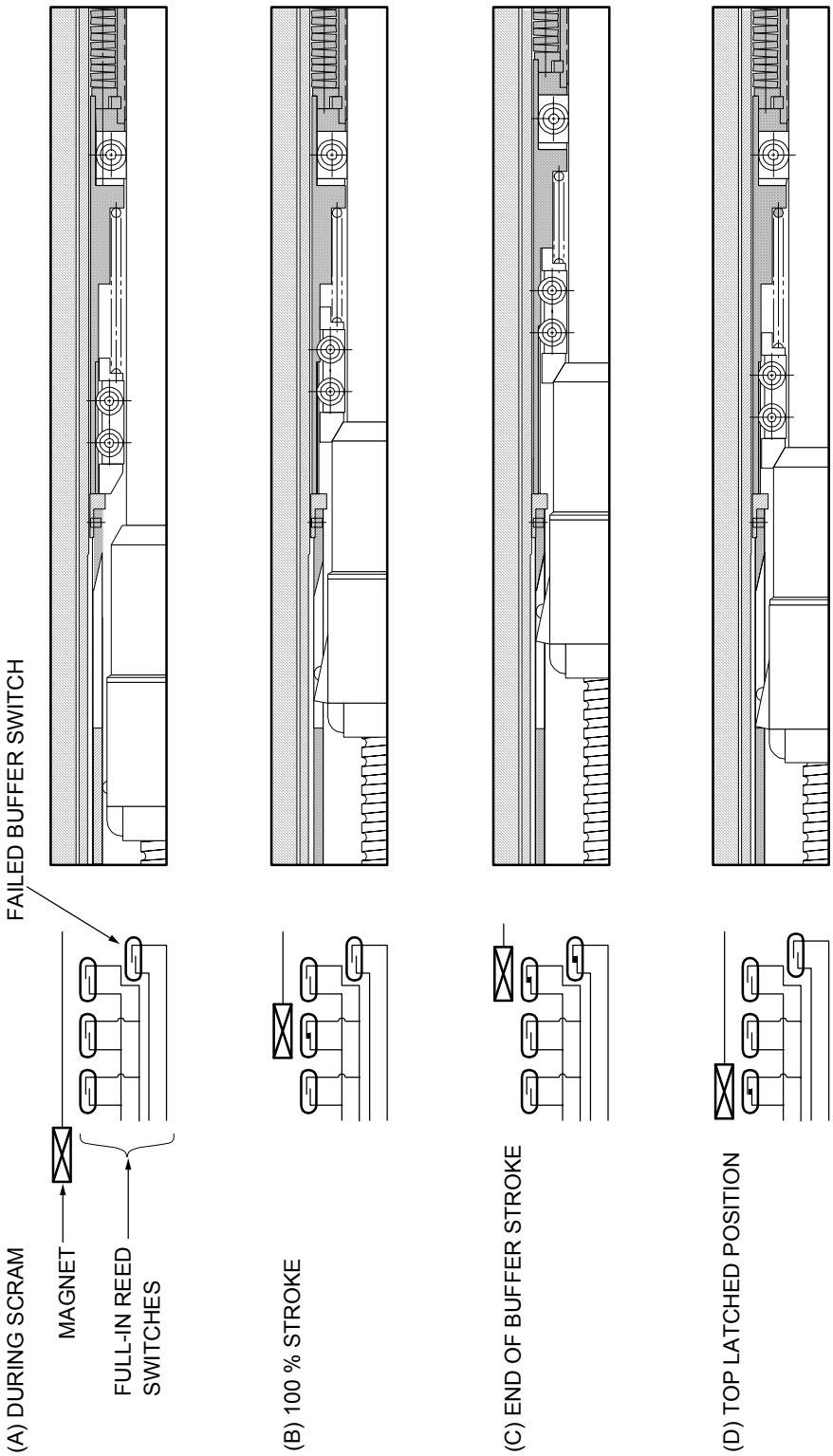

Figure 3.2-3 Continuous Full-in Indicating Device

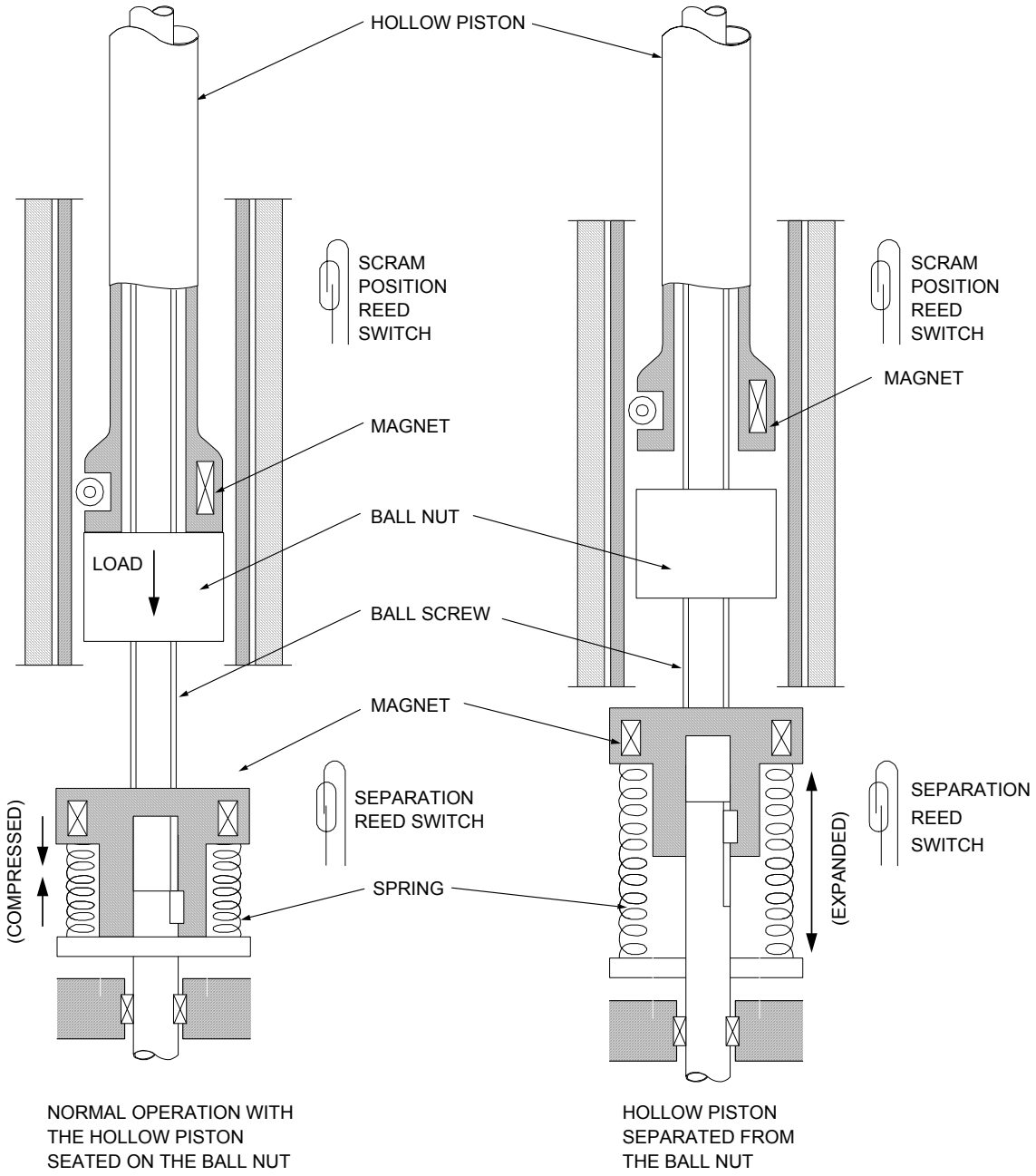

Figure 3.2-4 Control Rod Separation Detection

The brake is classified as passive safety-related because it performs its holding function when it is in its normally de-energized condition.

A ball check valve is located in the middle flange of the drive at the scram inlet port. The check valve is classified as safety-related because it actuates to close the scram inlet port under conditions of reverse flow caused by a break of the scram line. This prevents the loss of pressure to the underside of the hollow piston and the generation of loads on the drive that could cause a rod ejection.

3.2.4.9 Integral Internal Blowout Support

An internal CRD blowout support replaces the support structure of beams, hanger rods, grids and support bars used in BWR/6 and product lines before that. The internal support concept is illustrated schematically in Figure 3.2-7. This system utilizes the CRD outer tube integral with the internal support to provide the anti-ejection support. The outer tube is locked at the top via the internal support to the control rod guide tube (CRGT) base by a bayonet coupling, which is described above. The outer tube is bolted to the CRD housing flange via the middle flange welded to it at the bottom, as described above in a discussion on FMCRD pressure boundary.

The CRD blowout support is designed to prevent ejection of the CRD and the attached control rod considering failures of two types at the weld (Point A in Figure 3.2-7) between the CRD housing and the stub tube penetration of the RPV bottom head: (1) a failure through the housing along the fusion line – just below the weld with the weld and the housing extension inside the vessel remaining intact, or (2) a failure of the weld itself with the entire housing remaining intact but without support at the penetration.

With a housing failure, the weight plus pressure load acting on the drive and housing would tend to eject the drive. In this event, the CRGT base remains supported by the intact housing extension inside the vessel; therefore, the CRD locked with the CRGT base remains supported, and thereby also restricts the coolant leakage through the small area of the annulus between the CRD outer tube and the inside of the CRD housing. In the event of total failure of the weld itself leaving the entire housing intact, the housing would tend to be driven downward by the total weight plus vessel pressure. However, after the interconnected assembly of the housing, CRD and CRGT moves down a short distance, the flange at the top of the CRGT contacts the core plate, stopping further movement of the assembly. Since the CRD is positively locked to the CRGT base, it cannot eject. In this case, the housing which bears on top of the blowout support, is also prevented from leaving the penetration, thereby restricting the coolant leak path to the small area of the annulus between the outside of CRD housing and the inside of the penetration stub tube.

An orderly shutdown would result if any of the two failures were to occur, since the restricted coolant leakage would be less than the supply from the normal make up systems. The safety-related components that provide the anti-ejection function are the (1) internal CRD blowout support, (2) CRD outer tube and middle flange, (3) entire CRD housing, (4) CRGT and (5) core plate. The materials of these components are specified to meet quality requirements consistent with that function.

If a total failure of all the flange bolts attaching the spool piece flange and also the middle flange with the CRD housing flange (Point B on Figure 3.2-7) were to occur, the drive would be prevented from moving downward by the middle flange seat provided for the spindle adapter as part of the anti-rotation gear (see Section 3.2.5.3.1).

3.2.4.10 FMCRD Seal Leak Detection

An FMCRD seal leak detection subsystem is located in the lower drywell underneath the drive mechanisms. It is provided to permit monitoring and collection of leakage flow past the drive shaft seal assemblies in the lower drive housings (spool pieces). By this means, seal performance can be observed during plant operation to facilitate maintenance planning for drive seal refurbishment during plant outages. The seal leak detection subsystem also functions to contain the drive leakage within a closed system where it can be routed to the drywell equipment drain sump as identified leakage.

The seal leak detection subsystem is composed of small diameter piping, flow sight glass boxes and leakage flow meters arranged into multiple leak detection groups. Each leak detection group consists of leak-off piping from multiple drives routed to a common flow sight glass box. The leak-off piping is connected to the flow sight glasses in such a way as to allow visual confirmation of leakage flow from the individual pipes and identification of the leaking FMCRD. Visual observation of leakage in this manner can only be made during plant outages when the lower drywell is accessible to plant personnel.

During plant operation, the leakage water is collected in the individual flow sight glass boxes and detected by the flow meters installed in the drain piping from each box. The flow meters are integral type meters which can sense very small quantities of leakage from each box. This method is used to monitor drive leakage during plant operation when the lower drywell is inaccessible to personnel. It allows identification of excessive leakage from any particular leak detection group.

The leakage water from all the leak detection groups is collected in a common drain header pipe and routed to the lower drywell equipment drain sump, where it contributes to containment identified leakage.

The seal leak detection system is eliminated when the sealless, magnetic coupling design is incorporated.

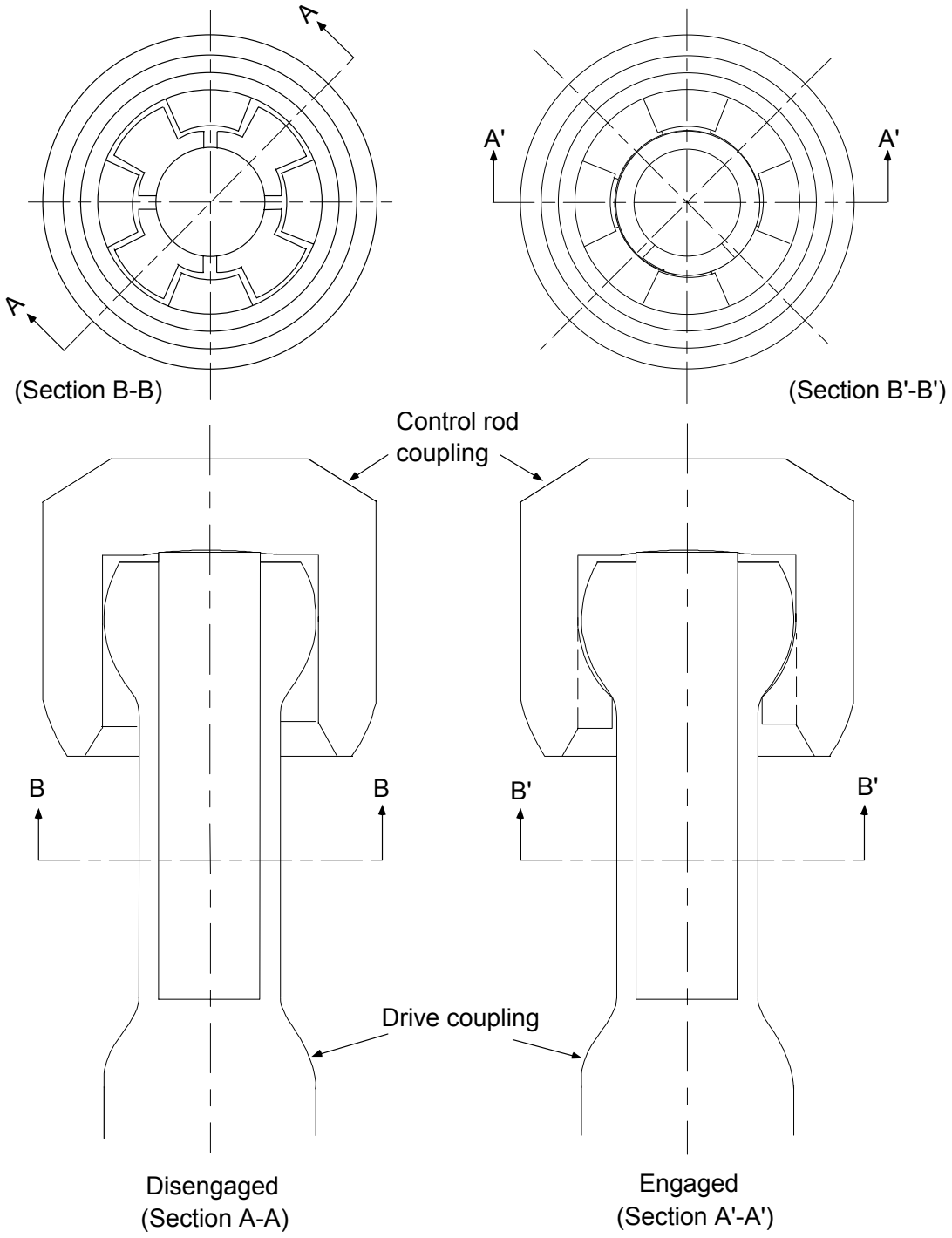

Figure 3.2-5 Control Rod -to- Control Rod Drive Coupling

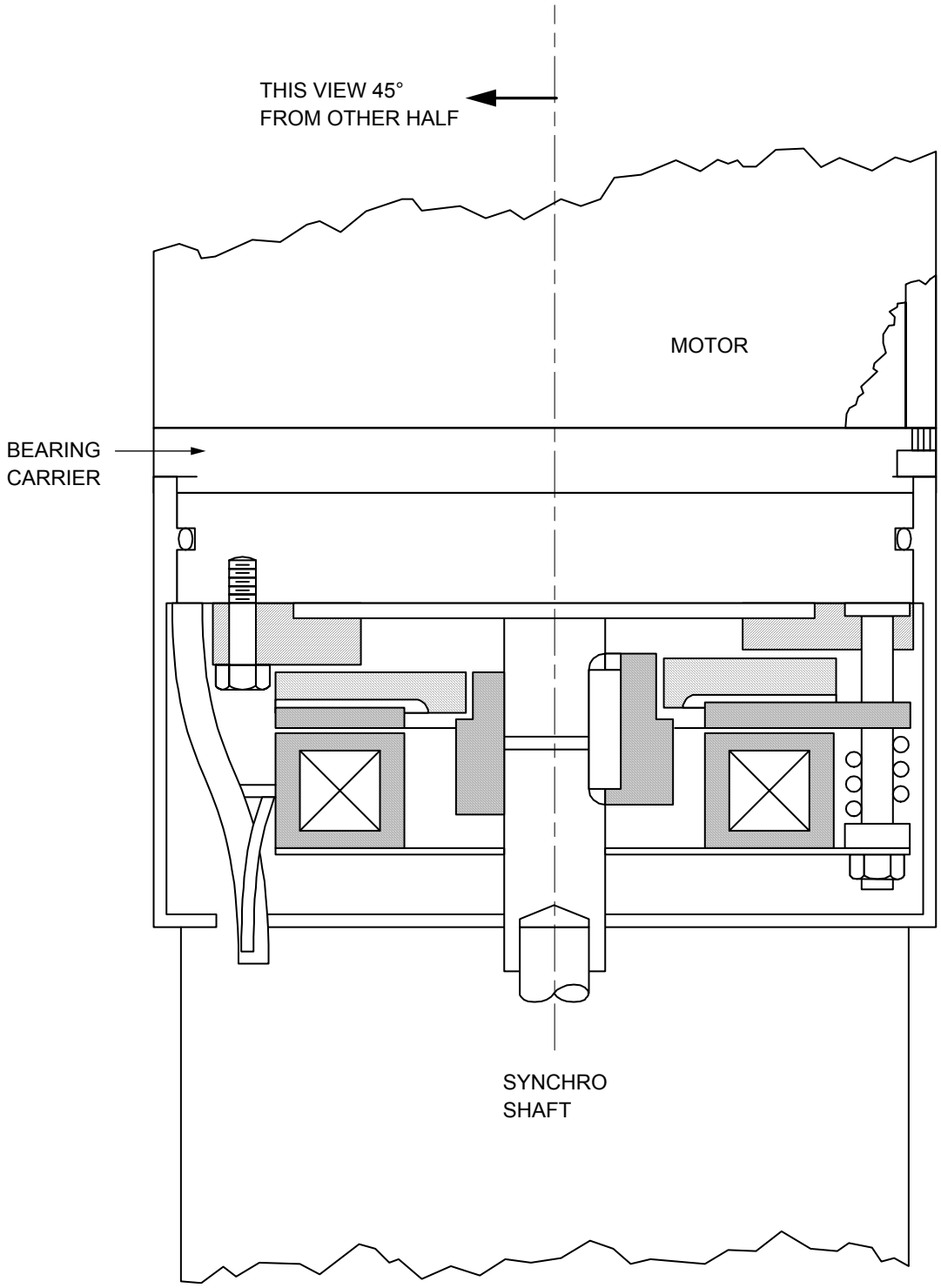

Figure 3.2-6 Electro-Mechanical Brake

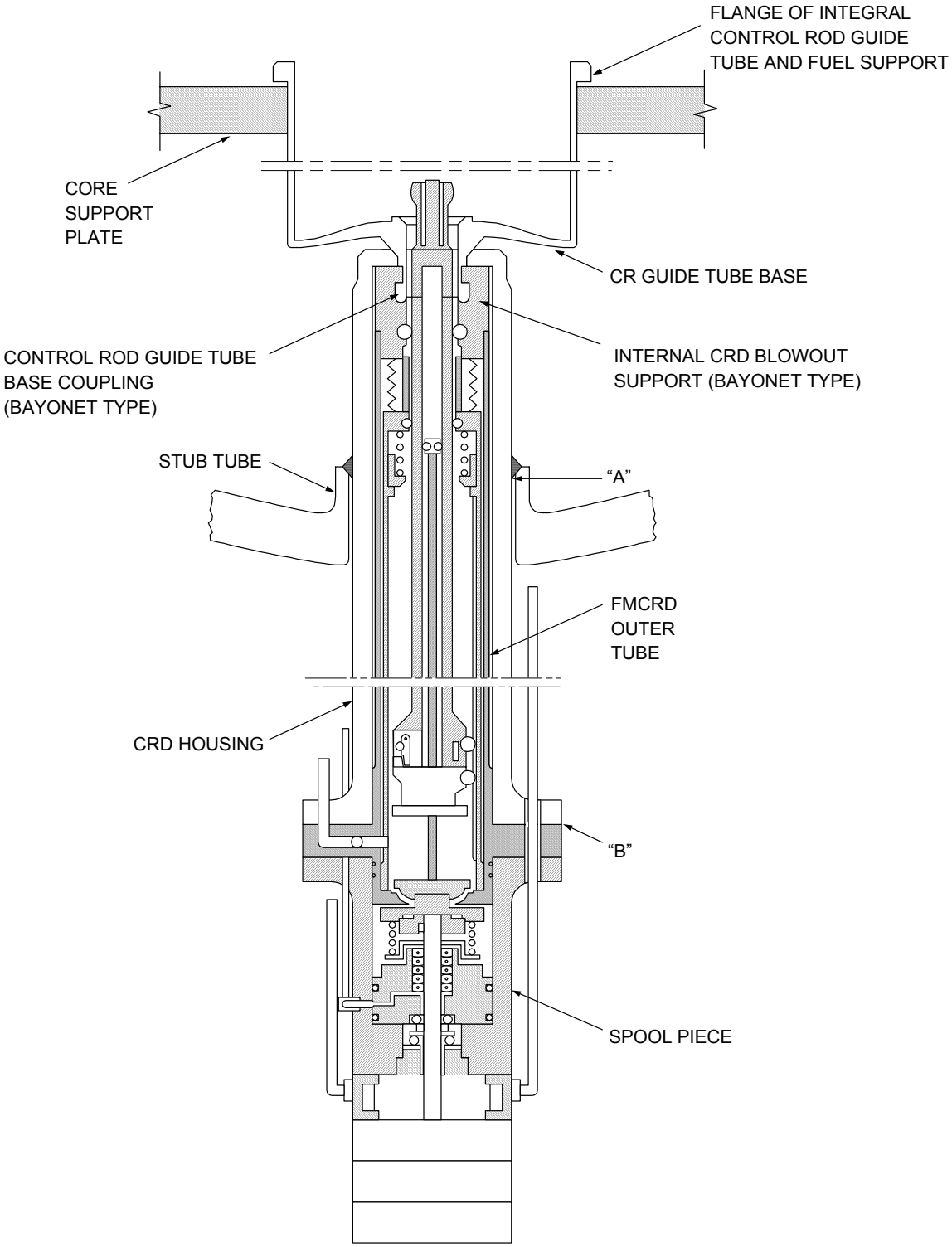

Figure 3.2-7 Internal CRD Blowout Support Schematic

3.2.5 Materials of Construction

The following material listing applies to the control rod drive (CRD) mechanism. The position indicator and minor non-structural items are omitted. The properties of the materials selected for the CRD mechanism shall be equivalent to those given in Appendix I to Section III of the ASME Code or Parts A and B of Section II of the ASME Code, or an approved alternative code, except that cold-worked series 300, austenitic stainless steels is controlled by limiting hardness, bend radius, or the amount of induced strain.

(1) Spool Piece Assembly

Spool Piece Housing	ASME 182 Grade F304L
Seal Housing	ASME 182 Grade F304L
Drive Shaft	ASME 479 Grade XM-19 (Hardsurfaced with Colmonoy No. 6)
Ball Bearings	ASTM A276 Type 440C
Gland Packing Spring	Inconel X-750

(2) Ball Spindle Assembly

Ball Screw Shaft	ASTM A-564 TP630 (17-4PH) Condition H-1100
Ball Nut	ASTM A-564 TP630 (17-4PH) Condition H-1100
Balls	ASTM A276 Type 440C
Guide Roller	Stellite No. 3
Guide Roller Pin	Haynes Alloy No. 25
Guide Shaft	Stellite No. 6
Guide Shaft Bushing	Stellite No. 12
Spindle Head Bolt	Stellite No. 6B

3) Buffer Assembly

Buffer Spring	Inconel X-750
Buffer Sleeve	316L S.S. (Hardfaced with Colmonoy No. 6)
Guide Roller	Non-cobalt base alloy
Guide Roller Pin	Non-cobalt base alloy
Stop Piston	316L (Hardsurfaced with Stellite No. 6)

(4) Hollow Piston	
Piston Tube	XM-19
Piston Head	316L (Hardsurfaced with Stellite No. 3)
Latch	Inconel X-750
Latch Spring	Inconel X-750
Bayonet Coupling	Inconel X-750
(CRD Spud)	
(5) Guide Tube Assembly	
Guide Tube	316L
(6) Outer Tube Assembly	
Outer Tube	XM-19
Middle Flange	ASME SA182 Grade F304L
Bayonet Coupling	XM-19
(CRD Blowout Support)	
Spindle Head Bushing	Stellite No. 12
Separation Spring	Inconel X-750
Separation Magnet	Alnico No. 5
Buffer Disk Spring	Inconel X-750
Buffer Sleeve	316L (Hardsurfaced with Colmonoy No. 6) *
(7) Miscellaneous Parts	
Ball for Check Valve	Haynes Alloy
O-Ring Seal	321SS Coated with a qualified material
(Between CRD Housing and CRD)	
CRD Installation Bolts	ASME SA193, Grade B7

Special Materials

The bayonet coupling, latch and latch spring, separation spring, and gland packing spring are fabricated from Alloy X-750 in the high temperature (1093°C) annealed condition, and aged 20 hours at 704°C to produce a tensile strength of 1137.7 MPa minimum, yield of 724 MPa minimum, and elongation of 20% minimum. The ball screw shaft and ballnut are ASTM A-564, TP 630 (17-4PH) (or its equivalent) in condition H-1100 (aged 4 hours at 593°C), with a tensile strength of 265.3 MPa minimum, yield of 792.9 MPa minimum, and elongation of 15% minimum.

These are widely used materials, whose properties are well known. The parts are readily accessible for inspection and replaceable if necessary.

All materials for use in this system shall be selected for their compatibility with the reactor coolant as described in applicable articles of the ASME Code.

All materials, except SA479 or SA249 Grade XM-19, have been successfully used for the past 20 to 25 years in similar drive mechanisms. Extensive laboratory tests have demonstrated that ASME SA479 or SA249 Grade XM-19 are suitable materials and that they are resistant to stress corrosion in a BWR environment.

No cold-worked austenitic stainless steels except those with controlled hardness or strain are employed in the Control Rod Drive (CRD) System.

3.2.6 FMCRD Motor and Controls

The motor bolts to the spool piece through a motor bracket. The motor is a stepping motor similar to that used in robotic and precision positioning applications. The use of the stepping motor is the major change from the configuration used in Europe. The European drives used a gear motor and because of this had less precise positioning capability than the ESBWR FMCRD. In addition, the gear motor required increased maintenance compared to the stepping motor. The stepping motor design is based on motors that have had successful experience in industrial applications.

There are two synchro type position indicators located below the stepping motor. The synchros provide a continuous readout of the rod position during normal operation and are driven by gears from the motor shaft.

The brake is mounted between the motor and the synchros. The brake serves to restrain the rod against withdrawal in the unlikely event that the scram line breaks. The brake is redundant with the ball check valve in mitigating the scram line break. It should be noted at this point that the check valve on the FMCRD has no function other than to mitigate the scram line break and to limit leakage during drive replacement. Table 3.2-2 provides some key FMCRD parameters.

Table 3.2-2 Key FMCRD Parameters

	FMCRD	LPCRD
Step Size	18.3 mm	152 mm
Movement Speed	30 mm/sec	76 mm/sec
Scram time 60 % insertion	2.39 sec	1.30 sec

The power to the FMCRD is provided by a solid state, thyristor driven power supply. The power supply is based on proven products with successful experience in industrial applications.

The power supply is a variable voltage and frequency device which starts the motor at low speed, accelerates it to the normal run speed and then slows it when approaching the specified position.. The power supply interfaces with the Rod Control Information System (RCIS). The power supply includes the capability to move the individual drive while the RCIS provides the logic and control for overall control rod motion.

The DC power for the brake, which is an energize to release model, is supplied by an inverter which is integrated with the motor power supply cabinets.

[[

{3}]]

The vector-controlled induction motor and its controls will be described in more detail in the Safety Analysis Report.

3.2.7 Drive Accommodation of the Heavier Control Rod Weight

[[

{3}]]

[[

{3}]]

Figure 3.2-8

3.2.8 Hydraulic Control Units

The HCU is a much simpler unit than that used with the LPCRD. The ESBWR HCU requires no directional control valves because normal drive positioning is performed by electric motors in the drives and requires no scram exhaust valve or lines because scram discharge is into

the reactor vessel. The HCU consists of a gas bottle and accumulator, which are mounted on a frame. The HCU also includes the scram and scram pilot valves. In ESBWR there is one HCU for every two FMCRDs rather than the one HCU per CRD as in past GE plants, prior to ABWR. The practice of using more than one FMCRD per HCU has been a European practice and in European plants several FMCRDs are fed by one HCU. In the case of the ESBWR, it was decided to use the arrangement of one HCU for every two FMCRDs so that proven components such as accumulator pistons, scram valves and scram pilots could be used. The use of the paired arrangement allows savings in space and maintenance without sacrificing reliability or safety. The two FMCRDs on a given HCU are widely separated in the core so that there is no loss of shutdown margin if an HCU fails.

Each hydraulic control unit (HCU) furnishes pressurized water for hydraulic scram, on signal from the RPS, to two drive units. Additionally, each HCU provides the capability to adjust purge flow to the two drives. A test port is provided on the HCU for connection of a portable test station to allow controlled venting of the scram insert line to test the FMCRD ball check valve during plant shutdown.

The basic components of each HCU are described in the following paragraphs. The HCU configuration is shown on the CRD System P&ID.

(1) Scram Pilot Valve Assembly

The scram pilot valve assembly is operated from the RPS. The scram pilot valve assembly, with two solenoids, controls the scram inlet valve. The scram pilot valve assembly is solenoid-operated and is normally energized. Upon loss of electrical signal to the solenoids (such as the loss of external AC power), the inlet port closes and the exhaust port opens. The pilot valve assembly is designed so that the trip system signal must be removed from both solenoids before air pressure can be discharged from the scram valve operators. This prevents the inadvertent scram of both drives associated with a given HCU in the event of a failure of one of the pilot valve solenoids.

(2) Scram Inlet Valve

The scram inlet valve opens to supply pressurized water to the bottom of the drive piston. This quick-opening globe valve is operated by an internal spring and system pressure. It is closed by air pressure applied to the top of its diaphragm operator. A position indicator switch on this valve energizes a light in the control room as soon as the valve starts to open.

(3) Scram Accumulator

The scram accumulator stores sufficient energy to fully insert two control rods at any reactor pressure. The accumulator is a hydraulic cylinder with a free-floating piston. The piston separates the water on top from the nitrogen below. A check valve in the accumulator charging line, prevents loss of water pressure in the event that supply pressure is lost.

During normal plant operation, the accumulator piston is seated at the bottom of its cylinder. Loss of nitrogen decreases the nitrogen pressure, which actuates a pressure switch and sounds an alarm in the control room.

To ensure that the accumulator is always able to produce a scram, it is continuously monitored for water leakage. A float-type level switch actuates an alarm in the control room if water leaks past the piston barrier and collects in the accumulator instrumentation block.

(4) Purge Water Orifice and Makeup Valve

Each HCU has a restricting orifice in the purge water line to control the purge flow rate to the two associated FMCRDs. This orifice maintains the flow at a constant value while the drives are stationary. A bypass line containing a solenoid-operated valve is provided around this orifice. The valve is signaled to open and increase the purge water flow whenever either of the two associated FMCRDs is commanded to insert by the Rod Control and Information System (RCIS). During FMCRD insertion cycles, the hollow piston moves upward, leaving an increased volume for water within the drive. Opening of the purge water makeup valve increases the purge flow to offset this volumetric increase and precludes the backflow of reactor water into the drive, thereby preventing long-term drive contamination.

(5) Test Connection for FMCRD Ball Check Valve Testing and Friction Testing

Contained within the HCU is a test port to allow connection of temporary test equipment for the conduct of FMCRD ball check valve testing and drive friction testing. This test port, which has a quick-connect type coupling, is located downstream of the restricting orifice and check valve in the purge water line.

FMCRD ball check valve testing is performed by attaching the check valve test fixture to the HCU test port. The test fixture exercises the check valve by generating a controlled backflow through the check valve housing, causing the valve to backseat. The backflow is contained within a controlled volume inside the test fixture.

FMCRD friction testing also utilizes a special test fixture connected to the HCU test port. The test fixture contains a small pump and associated hydraulic controls to pressurize the underside of the hollow piston. When the pressure under the hollow piston is high enough to overcome both the combined hollow piston and control rod weight and the drive line friction, the hollow piston will separate from the ball-nut and drift the control rod into the core. Instrumentation measures the pressure under the hollow piston as it is being inserted. The measured pressure is a direct indication of the drive line friction. Water for the test fixture pump is supplied from the CRD pump suction line via piped connections to test ports located in the HCU rooms.

3.2.9 Control Rod Drive Hydraulic System

The ESBWR Control Rod Drive Hydraulic System supplies clean, de-mineralized water, which is regulated and distributed to provide charging of the hydraulic control unit (HCU) scram accumulators and purge water flow to the FMCRDs. The Control Rod Drive Hydraulic System

is also the source of pressurized water for purging the Reactor Water Cleanup/Shutdown Cooling (RWCU/SDC) System Pump. Additionally, the Control Rod Drive Hydraulic System provides high pressure makeup to the reactor during events in which the feedwater system is unable to maintain reactor water level.

The ESBWR Control Rod Drive Hydraulic System, including the HCU, has several different or modified design features in comparison to BWR5/6. These features are a result of changing from LPCRD installed in BWR5/6 to the FMCRD installed in ESBWR. As a result of this change, the Control Rod Drive Hydraulic System and the HCU for the ESBWR is simpler in configuration than for the BWR5/6. The ESBWR requires no stabilizing valve or drive water headers because CRD directional control (normal insert and withdraw) are performed by electrical motors which are part of the drives. The ESBWR CRD pumps are higher capacity and higher head to provide greater stored energy to the HCUs.

The CRD pump is basically the same as that used in BWR/6 plants, i.e., a multistage centrifugal pump. The filtration system is basically the same as that used on BWR/6 also.

There are two differences between the ESBWR and earlier product lines in the area of the scram system. One is the elimination of the scram discharge volume and the other is the presence of a scram signal on low charging header pressure. The basis for both these differences is the same. The FMCRD scrams by discharging all the scram water to the reactor, therefore there is no reactor pressure assisted scram as in the case of the LPCRD. The lack of a reactor pressure assisted scram makes it advisable to scram if the charging header pressure drops below a pressure that will provide rod insertion even during a transient. The fact that the FMCRD discharges to the reactor eliminates the need for the scram discharge volume. The elimination of the scram discharge volume eliminates the associated maintenance and personnel exposure as well as a potential source of common mode failure.

The Control Rod Drive Hydraulic Subsystem supplies water under high pressure to charge the accumulators, to purge the FMCRDs and to purge the Reactor Water Cleanup/Shutdown Cooling (RWCU/SDC) System pumps. The Control Rod Drive Hydraulic System provides the required functions with the pumps, valves, filters, piping, instrumentation and controls shown on the CRD System P&ID. Duplicate components are included where necessary to assure continuous system operation if an inservice component should require maintenance.

The Control Rod Drive Hydraulic System hydraulic requirements and components are described in the following paragraphs.

3.2.9.1 Hydraulic Requirements

The hydraulic requirements, identified by the function they perform, are:

(1) An accumulator hydraulic charging pressure of approximately 15 MPaA is required. Flow to the accumulators is required only during scram reset or system startup.

(2) Purge water to the drives is required at a flow rate of approximately 1.3 L/min per drive unit.

(3) Approximately 20 L/min purge flow is provided to the cleanup pumps. This flow is provided at approximately CRD pump discharge pressure

(4) A minimum of 105 m^3/hr is supplied to the reactor in the high pressure makeup mode of operation with both CRD supply pumps running and reactor gauge pressure less than or equal to 8.619 MPa . With one supply pump running, a minimum of 52 m^3/hr is delivered to the reactor.

For the high pressure makeup mode of operation, the CRDHS operates with both pumps running simultaneously. The standby pump is initiated automatically by low reactor water level so that the combined flow from both pumps can provide the required high pressure makeup flow to the reactor vessel. The standby pump will also start automatically if loss of discharge header pressure is sensed during normal operation, indicating a failure of the operating pump. This will prevent a scram due to low charging water header pressure from occurring as result of an inadvertent pump trip.

The pump suction filters are bypassed automatically during two-pump operation to assure that adequate NPSH is available for the pumps. Two bypass lines are provided around the suction filters, each line containing a normally closed motor-operated valve. These valves are signaled to open when the high pressure makeup mode of operation is initiated.

An air-operated isolation valve is also provided in the charging water header. It closes automatically when the system is initiated into the high pressure makeup mode of operation. It blocks the flow through the header to allow all CRDHS flow in this mode to be directed to the reactor via the feedwater system. The valve is designed to preferentially fail closed upon loss of control power or instrument air.

An air-operated isolation valve is also provided in the purge water header. It closes automatically when the system is initiated into the high pressure makeup mode of operation. It blocks the flow through the header to allow all CRDHS flow in this mode to be directed to the reactor via the feedwater system. The valve is designed to preferentially fail closed upon loss of control power or instrument air.

3.2.9.2 CRD Supply Pump

One supply pump pressurizes the CRD System with water from the condensate treatment system and/or condensate storage tanks. One spare pump is provided for standby. A discharge check valve prevents backflow through the non-operating pump. A portion of the pump discharge flow is diverted through a minimum flow bypass line to the condensate storage tank. This flow is controlled by an orifice and is sufficient to prevent pump damage if the pump discharge is inadvertently closed.

Condensate water is processed by disposable element type pump suction filters with a 25-micrometer absolute rating. The drive water filter, downstream of the pump, is a cleanable element type with 50-micrometer absolute rating. A differential pressure indicator and control room alarm monitor each filter element as they collect foreign materials.

3.2.9.3 Accumulator Charging Water Header

Accumulator charging pressure is established by precharging the nitrogen accumulator to a precisely controlled pressure at known temperature. During scram, the scram valves open and permit the stored energy in the accumulators to discharge into the drives. The resulting pressure decrease in the charging water header allows the CRD supply pump to "run out" (i.e., flow rate to increase substantially) into the control rod drives via the charging water header. The flow element upstream of the charging water header senses high flow and provides a signal to the manual/auto flow control station which, in turn, closes the system flow control valve. This action effectively blocks the flow to the purge water header so that the runout flow is confined to the charging water header.

Safety-related pressure instrumentation is provided in the charging water header to monitor header performance. The pressure signal from this instrumentation is provided to both the RCIS and RPS. If charging water header pressure degrades, the RCIS will initiate a rod block and alarm at a predetermined low pressure setpoint. If pressure degrades even further, the RPS will initiate a scram at a predetermined low-low pressure setpoint. This assures the capability to scram and safely shut down the reactor before the HCU accumulator pressure can degrade to the level where scram performance is adversely affected following the loss of charging header pressure.

The charging water header contains a check valve and a bladder type accumulator. The accumulator is located downstream of the check valve in the vicinity of the low header pressure instrumentation. It is sized to maintain the header pressure downstream of the check valve above the scram setpoint until the standby CRD pump starts automatically, following a trip or failure of the operating CRD pump. Pressure instrumentation installed on the pump discharge header downstream of the CRD pump drive water filters monitors system pressure and generates the actuation signals for startup of the standby pump if the pressure drops below a predetermined value that indicates a failure of the operating pump.

3.2.9.4 Purge Water Header

The purge water header is located downstream from the flow control valve. The flow control valve adjusts automatically to maintain constant flow to the FMCRDs as reactor vessel pressure changes. Because flow is constant, the differential pressure between the reactor vessel and Control Rod Drive Hydraulic System is maintained constant independent of reactor vessel pressure. A flow indicator in the control room monitors purge water flow. A differential pressure indicator is provided in the control room to indicate the difference between reactor vessel pressure and purge water pressure.

3.2.9.5 High Pressure Makeup Line

The CRDS supplies high pressure makeup water to the reactor vessel through piping connecting the discharge lines of the CRD pumps to the RWCU/SDC. The flow is they routed through RWCU/SDC piping to the feedwater system for delivery to the reactor via the feedwater sparger.

Each pump provides half the flow capacity for the high pressure makeup mode of operation. Located downstream of each pump is a flow control station containing the flow instrumentation and control valve for regulating the pump flow during high pressure makeup. The piping from the two flow control stations is then headered together into a single line to deliver the combined pump flow to the RWCU/SDC. This line contains a check valve and a normally open motor-operated isolation valve. The check valve is provided to prevent backflow from the RWCU/SDC System. The isolation valve is provided for system testing. During testing, it isolates the line and diverts the flow to the system test line.

3.2.9.6 System Test Line

A system test line is provided to allow testing of the high pressure makeup mode during normal plant operation without injecting the relatively cold CRDHS water into the reactor. It connects with the high pressure makeup line at a point downstream of the two pump flow control stations and is routed back to the condensate storage tank (CST). The line contains a variable position valve which is used to throttle the test flow so the upstream pressure in the line can be varied to simulate operation over the full range of reactor pressure.

3.2.10 System Operation

3.2.10.1 Normal Operation

Normal operation is defined as those periods of time when no control rod drives are in motion. Under this condition, the CRD System provides charging pressure to the HCUs and supplies purge water to the control rod drives, and cleanup pumps.

A multi-stage centrifugal pump supplies the system with water from the condensate and feedwater system and/or condensate storage tank. A constant portion of the pump discharge is continuously bypassed back to the condensate storage tank in order to maintain a minimum flow through the pump. This prevents overheating of the pump if the discharge line is blocked. The total pump flow during normal operation is the sum of the bypass flow, the FMCRD purge water flow through the flow control valve, and the cleanup pump purge flow. The standby pump provides a full capacity backup capability to the operating pump. It will start automatically if failure of the operating pump is detected by pressure instrumentation located in the common discharge piping downstream of the drive water filters.

The system water is processed by redundant filters in both the pump suction and discharge lines. One suction filter and one drive water filter are normally in operation, while the backup filters are on standby and valved out of service. Differential pressure instrumentation and control room alarms monitor the filter elements as they collect foreign material.

The purge water for each drive is provided by the purge water header. The purge water flow control valve automatically regulates the purge water flow to the drive mechanisms. The purge water flow rate is indicated in the control room.

In order to maintain the ability to scram, the charging water header maintains the accumulators at a high pressure. The scram valves remain closed except during and after scram,

so during normal operation no flow passes through the charging water header. Pressure in the charging water header is monitored continuously. A significant degradation in the charging header pressure causes a low pressure warning alarm and rod withdrawal block by the RCIS. Further degradation, if occurring, causes a reactor scram by the RPS.

Pressure in the pump discharge header downstream of the drive water filters is also monitored continuously. Low pressure in this line is used to indicate that the operating pump has failed or tripped. If it should occur, automatic startup of the standby pump is initiated and the system is quickly repressurized. This prevents the malfunctioning of the operating pump from causing a reactor scram on low charging water header pressure, an event which would otherwise be a direct consequence of the malfunction.

3.2.10.2 Control Rod Insertion and Withdrawal

The FMCRD design provides the capability to move a control rod up and down both in fine steps of 18.3 mm and continuously over its entire range at a speed of 30 mm/s ±10%. Normal control rod movement is under the control of the RCIS. The RCIS controls the input of actuation power to the FMCRD motor from the electrical power supply (via the stepping motor driver module) in order to complete a rod motion command. The FMCRD motor rotates a screw shaft which, in turn, causes the vertical translation of a ball-nut on the screw shaft. This motion is transferred to the control rod via a hollow piston which rests on the ball-nut. Thus, the piston with the control rod is raised or lowered, depending on the direction of rotation of the FMCRD motor and screw shaft.

During a drive insertion, the purge water flow to the drive is increased by opening the solenoid-operated purge water makeup valve within the associated HCU. The increased flow offsets the volumetric displacement within the drive as the hollow piston is inserted into the core and prevents reactor water from being drawn back into the drive.

3.2.10.3 Scram

Upon loss of electric power to both scram pilot valve solenoids, the scram valve in the associated HCU opens to apply the hydraulic insert forces to its respective FMCRDs using high pressure water stored within the precharged accumulator (the nitrogen-water accumulator having previously been pressurized with charging water from the Control Rod Drive Hydraulic System). Once the hydraulic force is applied, the hollow piston disengages from the ball-nut and inserts the control rod rapidly. The water displaced from the drive is discharged into the reactor vessel. Indication that the scram has been successfully completed (all rods full-in position) is displayed to the operator.

The CRD System provides the following scram performance with vessel pressure below 7.48 MPaG (as measured at the vessel bottom), in terms of the average maximum elapsed time to attain the listed scram position (percent insertion) after loss of signal to the scram solenoid pilot valves (time zero).

The start of motion is the time delay between loss of signal to the scram solenoid pilot valve and actuation of the 0% reed switch.

Simultaneous with the hydraulic scram, each FMCRD motor is started in order to cause electric-driven run-in of the ball-nut until it reengages with the hollow piston at the full-in position. This action is known as the scram follow function. It completes the rod full-in insertion and prepares the drives for subsequent withdrawal to restart the reactor.

Percent Insertion	Time (seconds)
Start of Motion	≤0.20
10	≤0.42
40	≤1.00
60	≤1.44
100	≤2.80

After reset of the RPS logic, each scram valve recloses and allows the Control Rod Drive Hydraulic System to recharge the accumulators.

3.2.10.4 Alternate Rod Insertion

The alternate rod insertion (ARI) function of the CRD System provides an alternate means for actuating hydraulic scram that is diverse and independent from the RPS. The signals to initiate the ARI are high reactor dome pressure or low reactor vessel water Level 2 or manual operator action. Following receipt of any of these signals, solenoid-operated on the scram air header open to reduce pressure in the header, allowing the HCU scram valves to open. The FMCRDs then insert the control rods hydraulically in the same manner as the RPS initiated scram. The same signals that initiate ARI will simultaneously actuate the FMCRD motors to insert the control rods electrically.

3.2.10.5 High Pressure Makeup

The high pressure makeup mode of operation initiates on receipt of a low reactor water Level 2 signal from the Leak Detection and Isolation System (LD&IS). When this occurs, the following actions take place automatically:

1. The CRD pump suction filter bypass valves (F014) open.

2. The standby CRD pump is actuated. Both CRD pumps are operated in parallel in order to deliver the required makeup flow capacity to the reactor.

3. The flow control valves (F020) in the high pressure makeup lines open to regulate the makeup water flow rate to the reactor. Test valve F023 opens, it is closed at the start of the event and test valve F024 closes, if it is open at the start of the event.

4. The isolation valves in the purge water header (F012) and charging water header (F030) close so that all makeup flow is delivered t the reactor through the high pressure makeup lines.

At high reactor water level 8, the flow control valves (F014) close to stop flow to the reactor in order to prevent flooding the main steam lines. Both pumps will continue to operate in a low flow condition by directing their flow back to the CST through the pump minimum flow lines. Alternately, the operator may choose at this time to manually realign the system into its normal operation mode by shutting down one pump and reopening the charging water header and purge water header isolation valves so that HCU accumulator charging and FMCRD purge water flow can be reestablished. In either case, the system is reset for an automatic restart of high pressure makeup if subsequent Level 2 should occur.

During testing of this mode of operation, the high pressure makeup line isolation valve (F023) is closed and pump flow is directed back to the CST through the test line. The backpressure in the line is varied by positioning of the throttle valve (F024) to simulate system operation over the full range of reactor pressure.

3.2.11 Safety Evaluation

3.2.11.1 Evaluation of Scram Time

The rod scram function of the CRD System provides the negative reactivity insertion required by safety design basis described in Section 3.2.2.1. The scram times shown in this description are reflected in plant transient analyses.

3.2.11.2 Scram Reliability

High scram reliability is the result of a number of features of the CRD System. For example:

(1) Each accumulator provides sufficient stored energy to scram two CRDs at any reactor pressure.

(2) Each pair of drive mechanisms has its own scram valve and dual solenoid scram pilot valve; therefore, only a single scram valve needs to open for scram to be initiated. Both pilot valve solenoids must be de-energized to initiate a scram.

(3) The RPS and the HCUs are designed so that the scram signal and mode of operation override all others.

(4) The FMCRD hollow piston and guide tube are designed so they will not restrain or prevent control rod insertion during scram.

(5) Each FMCRD mechanism initiates electric motor-driven insertion of its control rod simultaneous with the initiation of hydraulic scram. This provides a diverse means to assure control rod insertion.

3.2.11.3 Precluding Excessive Rate of Reactivity Addition

Excessive rates of reactivity addition are precluded in the design of the FMCRD. Prevention of rod ejection due to FMCRD pressure boundary failure and prevention of control rod drop are described below.

3.2.11.3.1 Control Rod Ejection Prevention

A failure of the CRD System pressure boundary will generate differential pressure forces across the drive, which will tend to eject the CRD and its attached control rod. The design of the FMCRD includes features that preclude rod ejection from occurring in these hypothetical circumstances. The following subsections describe how these features function for pressure boundary failures at various locations.

(1) Failures at Drive Housing Weld

The bottom head of the reactor vessel has a penetration for each CRD location. A drive housing is raised into position inside each penetration and fastened by welding. The drive is raised into the drive housing and bolted to a flange at the bottom of the housing.

In the event of a failure of the housing just below the housing to penetration weld, or a failure of the weld itself with the housing remaining intact, ejection of the CRD and attached control rod is prevented by the integral internal CRD blowout support. The details of this internal blowout support structure are contained in Section 3.2.3.1.1.9.

(2) Rupture of Hydraulic Line to Drive Housing Flange

For the case of a scram insert line break, a partial or complete circumferential opening is postulated at or near the point where the line enters the housing flange. This failure, if not mitigated by special design features, could result in rod ejection at speeds exceeding maximum allowable limits of 10 cm/s (assuming rod pattern control) or 15 cm maximum travel distance before full stop. Failure of the scram insert line would cause loss of pressure to the underside of the hollow piston. The force resulting from full reactor pressure acting on the cross-sectional area of the hollow piston, plus the weights of the control rod and hollow piston, is imposed on the ball-nut. The ball-nut, in turn, translates this resultant force into a torque acting on the spindle. When this torque exceeds the motor residual torque and seal friction, reverse rotation of the spindle will occur, permitting rod withdrawal. Analyses show that the forces generated during this postulated event can result in rod ejection speeds which exceed the maximum allowable limits.

The FMCRD design provides two diverse means of protection against the results of a postulated scram insert line failure. The first means of protection is a ball check valve located in the middle flange of the drive at the scram port. Reverse flow during a line break will cause the ball to move to the closed position. This will prevent loss of pressure to the underside of the hollow piston, which, in turn, will prevent the generation of loads on the drive which could cause rod ejection.

The second means of protection is the FMCRD brake described in Section 3.2.3.1.1.8. In the event of the failure of the check valve, the passive brake will prevent the ball spindle rotation and rod ejection.

(3) Total Failure of All Drive Flange Bolts

The FMCRD design provides an anti-rotation device which engages when the lower housing (spool piece) is removed for maintenance. This device prevents rotation of the spindle and hence control rod motion when the spool piece is removed. The two components of the anti-rotation device are (1) the upper half of the coupling between the lower housing drive shaft and ball spindle, and (2) the back seat of the middle flange (Figure 3.2-1). The coupling of the lower housing drive shaft to the ball spindle is splined to permit removal of the lower housing. The underside of the upper coupling piece has a circumferentially splined surface which engages with a mating surface on the middle flange back seat when the spindle is lowered during spool piece removal. When engaged, spindle rotation is prevented. In addition to preventing rotation, this device also provides sealing of leakage from the drive while the spool piece is removed. In the unlikely event of the total failure of all the drive flange bolts attaching the spool piece flange and the middle flange of the drive to the housing flange, the anti-rotation device will be engaged when the spool piece falls and the middle flange/outer tube/CRD blowout support will be restrained by the control rod guide tube base bayonet coupling, thus preventing rod ejection.

3.2.11.3.2 Control Rod Drop Prevention

Control rod drop is prevented by the following features:

(1) Two redundant Class 1E switches in the FMCRD sense separation of the hollow piston, which positions the control rod, from the ball-nut. These switches sense either separation of the piston from the nut or separation of the control rod from the piston, and block further lowering of the nut, thereby preventing drop of either the control rod or the control rod and hollow piston as an assembly (See Section 3.2.3.1.1.6 for further details).

(2) Two redundant spring-loaded latches on the hollow piston open to engage in openings in the guide tube within the FMCRD to catch the hollow piston if separation from the ball-nut were to occur. These latches open to support the hollow piston (and control rod) following every scram until the ball-nut is run-in to provide the normal support for the hollow piston (and control rod).

(3) The control-rod to hollow-piston coupling is a bayonet type coupling. Coupling is verified by pull test for the control rod upon initial coupling at refueling and again each time an attempt is made to drive beyond the “full out” position during reactor operation. The control rod can only be uncoupled from the FMCRD by relative rotation, which is not possible during operation. The control rod cannot rotate, since it is always constrained between 12 fuel assemblies, and the hollow piston/CRD bayonet coupling cannot rotate, since the hollow piston has rollers which operate in a track within the FMCRD. Only structural failure would permit or result in control rod to FMCRD uncoupling, which, in turn, could only result in rod drop if the redundant switches failed to sense separation. In such failure scenarios, the rate of rod drop may exceed acceptable

reactivity addition rates; however, the number of failures involved in the scenario are so numerous that the probability of occurrence for the event is low enough to be categorized as incredible.

3.2.12 Testing, Inspection and Maintenance Requirements

3.2.12.1 CRD Maintenance

The procedure for removal of the FMCRD for maintenance or replacement is similar to previous BWR product lines. The control rod is first withdrawn until it backseats onto the control rod guide tube. This metal-to-metal contact provides the seal that prevents draining of reactor water when the FMCRD is subsequently lowered out of the CRD housing. The control rod normally remains in this backseated condition at all times with the FMCRD out; however, in the unlikely event it also has to be removed, a temporary blind flange is first installed on the end of the CRD housing to prevent draining of reactor water.

3.2.12.2 Operational Tests

After installation, all rods and drive mechanisms can be tested through their full stroke for operability.

The switches which detect separation will provide indication and automatic rod withdrawal block should a control rod separate from the drive mechanism during rod withdrawal. Additionally, the operator can observe the incore monitor indications to verify that the control rod is following the drive mechanism. All control rods that are partially withdrawn from the core can be tested for rod-following by inserting or withdrawing the rod one or two steps and returning it to its original position, while the operator observes the incore monitor indications.

To make a positive test of control rod to CRD coupling integrity, the operator can withdraw a control rod to the end of its travel and then attempt to withdraw the drive to the overtravel position. Failure of the hollow piston to overtravel-out demonstrates the integrity of the rod-to-drive coupling.

Control Rod Drive Hydraulic System pressures can be observed from instrumentation in the control room. Scram accumulator pressures can be observed on the nitrogen pressure gauges.

3.2.12.3 Surveillance Tests

The surveillance requirements for the CRD System are described below. While these requirements have not yet been formalized, the intent is to follow the general pattern established for surveillance testing in BWRs presently in operation.

(1) Each fully withdrawn control rod is exercised at least once each week. Each partially withdrawn control rod is exercised at least once each month.

(2) The coupling integrity is verified for each withdrawn control rod when the rod is fully withdrawn the first time. The procedure, as described in Section 3.2.6.2, is to withdraw the drive into the overtravel condition and observe the operation of the overtravel reed

switch. If the drive is properly coupled to the control rod the overtravel reed switch will not actuate. If the reed switch actuates it indicates the drive is uncoupled from the control rod.

(3) During operation, accumulator pressure and level at the normal operating value are verified. Experience with CRD systems of the same type indicates that weekly verification of accumulator pressure and level is sufficient to assure operability of the accumulator portion of the CRD System.

(4) At the time of each major refueling outage, each operable control rod is subjected to scram time tests from the fully withdrawn position. Experience indicates that the scram times of the control rods do not significantly change over the time interval between refueling outages. A test of the scram times at each refueling outage is sufficient to identify any significant lengthening of the scram times.

3.2.13 Instrumentation Requirements

The instrumentation for the CRD System includes the following:

(1) Differential pressure sensors monitor pressure drop across the pump suction filters and drive water filters. High filter differential pressure is alarmed in the control room.

(2) A pressure sensors is located in the inlet piping to each CRD pump to monitor the suction pressure. A low pressure condition trips the associated pump and is alarmed in the control room.

(3) Two pressure sensors are located in the common pump discharge line downstream of the drive water filters to monitor system pressure. A low pressure condition indicates a failure of the operating pump. A low-pressure signal from either sensor will actuate the standby pump.

(4) Four safety-related pressure sensors are located in the HCU accumulator charging water header. The output signals from these sensors are provided to the RCIS logic and RPS logic. A low pressure condition from two-out-of-four sensors causes the RCIS to generate an all-rod-withdrawal block. A low-low pressure condition causes the RPS to generate a reactor scram.

(5) A flow sensor is provided in the common pump discharge line downstream of the drive water filters and upstream of the charging water and purge water headers. The flow signal from this sensor provides the control input signal to the purge water flow control valves.

(6) Each of the two high pressure makeup lines downstream of the CRD pumps contains a flow sensor. The flow control signal from these sensors provides the control input signals to the high pressure makeup flow control valves.

(7) A pressure sensor is provided in the scram air header piping at a location downstream of the air header dump valves and ARI valves and upstream of the scram valves. Both high and low pressure conditions in the header are alarmed in the control room.

3.2.14 Controls and Interlocks

The functional controls for the CRD System components are defined on the system logic diagram. The following paragraphs define the various CRD System electrical interlocks:

The high pressure makeup mode of operation is initiated by a low reactor water Level 2 signal from the Leak Detection and Isolation System (LD&IS). On receipt of this signal, the following automatic actions occur:

- The standby CRD pump is started.
- The two pump suction filter bypass valves (F014) are opened.
- The charging water header isolation valve (F030) and purge water header isolation valve (F012) are closed.
- The high pressure makeup flow control valves (F020) are opened and start regulating injection flow. These valves reclose to stop flow to the reactor at high reactor water Level The standby CRD pump is started if a low system pressure condition occurs.
- The CRD pump trips upon receipt of a low suction pressure condition. An adjustable time delay is provided in the pump trip logic to protect against transient conditions.
- The CRD pumps are prevented from being started, or are tripped if running, if the pump lube oil pressure is low.
- The CRD charging header pressure is sensed by the RC&IS and the RPS. The following actions occur based on the level of pressure degradation. The actions are based on 2-out-of-4 logic. A time delay is provided in the RPS to avoid spurious or inadvertent trips.
- The system will continue to run with pump flow directed back to the CST through the pump minimum flow lines. The control valves reopen to restart high pressure makeup flow if a subsequent Level 2 signal should occur.
    - Low charging header pressure alarm and all rod withdrawal block.
    - Reactor trip due to low charging header pressure.

Control rod separation detection for any FMCRD causes both annunciation in the control room and a rod withdrawal block. The following signals in the CRD System initiate a rod withdrawal block by the RC&IS:

- Rod separation detection (individual rod block).

- Scram charging header pressure low (all rods block).
- Rod gang misalignment (all rods in gang block).

The high pressure makeup flow control valves (F020) are prevented from opening when the inboard feedwater maintenance valve on the feedwater line through which the CRD System delivers flow to the reactor is closed.

An interlock causes the high pressure makeup line isolation valve (F023) to open, if closed, and the test valve (F024) to close, if open, when the high pressure makeup mode of operation is initiated.

When in the high pressure makeup mode of operation, the CRD pumps are tripped to terminate CRD System flow when the level in any two of the three GDCS pools has dropped 0.5m below the normal level.

3.3 Isolation Condenser

3.3.1 Description and Functioning of System

The Isolation Condenser System (ICS) for ESBWR is shown in the "ESBWR Isolation Condenser System - Schematic Diagram" that accompanies this report section. The ICS provides the principal means of removing reactor decay heat produced during and following transient events which involve reactor scram and NSSS (Nuclear Steam Supply System) isolation. This includes the Anticipated Transient Without Scram (ATWS) event and a station blackout, i.e., unavailability of all AC power lasting 72 hours.

The ICS functions by natural circulation flow of reactor steam through a set of isolation condenser units (IC heat exchangers) located within a large pool of water (IC/PCC pool) positioned immediately outside the containment. Heat is rejected to this pool by condensation of reactor steam on the inside of the IC heat exchanger tubes and evaporation of IC/PCC pool water on the outside of the tubes. Evaporated IC/PCC pool water is vented to the atmosphere as shown on the schematic diagram.

The ESBWR ICS features four independent isolation condenser loops, one more than the SBWR, which are designed as closed-loop extensions of the reactor coolant pressure boundary (RCPB). Each loop contains an independent reactor steam supply line with a series pair of supply line isolation valves, a single IC heat exchanger unit, and a condensate discharge piping run. The discharge piping includes a series pair of discharge line isolation valves and a parallel pair of discharge line drain valves--one being motor-operated, fail-as-is, the other being nitrogen piston operated, fail-open. The discharge piping ends at a dedicated RPV condensate return nozzle. Two identical heat exchanger modules (banks) are coupled to form one complete IC heat exchanger unit. Each module is designed as a drum-and-tube type heat exchanger that features a horizontal upper and lower drum connected with multiple high-pressure vertical tubes. Reactor steam enters the IC heat exchanger unit via a central steam inlet line that branches at its top to distribute steam into the upper drums of the twin modules. Steam is condensed in the vertical tubes section. Condensate drains into respective lower drums which in turn are drained by lines that join into a single condensate return line that penetrates back into containment. This piping run ultimately connects to its dedicated ICS condensate return nozzle located approximately mid-height on the RPV. Recycling of steam produced by core decay heat by the ICS means that no large motor-driven reactor coolant makeup pumps must be brought into operation to ensure that water levels within the RPV remain well above the low-low-level trip points (Level 1) that would initiate ECCS (Emergency Core Cooling System) safety responses.

During normal power generation operations, each isolation condenser loop is in a ready-standby mode with all loop isolation valves fully open and both of the condensate drain lines closed. Accumulated subcooled condensate collects upstream from the condensate drain line valves, filling the condensate return piping and the IC heat exchanger with standing water up to the piping high point. Live reactor steam is present in the steam supply piping up through the horizontal distribution branch-piping that feeds steam to the IC heat exchanger upper drums. These horizontal branch runs are physically located approximately 0.5m (20 inches) above the IC/PCC pool surface, and are well insulated to minimize heat losses. Flow limiters are located in each horizontal branch run feeding the IC heat exchanger upper drums to limit the effects of a

steam pipe, tube, or condensate drain pipe failure in the IC/PCC pool. These flow limiters are 82 mm (3 1/4-inch) ID (internal diameter). For similar reasons, the condensate drain lines are limited to 100 mm (4-inch) diameter piping size. This limits the flow to any location outside the containment to a maximum of critical flow out of 2 x 82 mm flow restrictors plus backflow through a 100 mm diameter Schedule 80 pipe. The IC/PCC pool vent exhaust pathways (including pool moisture separators) are designed to withstand this type of LOCA flow exhaust condition.

Each IC heat exchanger is rated in nominal heat removal capability at 30 MWt. The design rating takes account of allowances for both potential tube-plugging plus corrosion over a 60-year design life.

ICS operation is initiated by the opening of one of the condensate return line valves (the motor-operated valve). Accumulated condensate drains out of the IC heat exchanger into the reactor, which then allows live steam to enter the tube bank. The startup process is sufficiently fast to limit the reactor pressure rises that result from NSSS isolation to well below the approximate 8.619 MPa spring-lift set-point pressures for the safety/relief valves (SRVs) for all non-accident transient isolation events. This is defined as an isolation transient having annualized occurrence frequencies classified as NORMAL, MODERATELY FREQUENT, or INFREQUENT. The latter occurrence frequencies range down to approximately 0.02/year. Thus, although the ESBWR NSSS still includes the conventional SRVs of previous BWR product lines, the prompt automatic operation of the ESBWR ICS at the outset of a transient together with the slower pressure response of the ESBWR, avoids lifting of any SRVs.

According to probability-based projections, SRVs will never lift during the 60-year design lifetime of the plant, therefore, the possibility for loss-of-coolant accidents (LOCAs) stemming from stuck-open SRV events is reduced to very low values. Such LOCAs represent, in previous BWR product line plant designs, a very considerable proportion of plant-internal events that could lead to core damage. By virtual elimination of this particular type of accident event, the predicted annualized core damage frequency (CDF) for the ESBWR as determined during Plant Safety Analyses (PSAs) is found to be significantly reduced.

After the initial responses of the ICS to an isolation transient, reactor pressure will continue to decrease because the system total heat rejection capacity soon well exceeds the core decay heat. The reactor operator monitors this process and, at a suitable point, will close-down one or more of the IC heat exchangers to keep vessel temperature cooldown rates from occurring at unnecessarily rapid rates.

3.3.2 Design Bases

3.3.2.1 Safety Design Bases

The ICS shall be comprised of four safety-related IC divisions that are electrically, mechanically, and physically separated in accordance with applicable design rules for separating safety-related divisions.

The ICS is required to be constructed of steel to such design pressure, temperature and environmental conditions that equal or exceed the upper limits of reactor system reference severe accident capability. The design pressure of the ICS is 10.34 MPa, and the design temperature is 314.5°C . These conditions correspond to ATWS event conditions.

With a minimum of three of its four divisions operational, the ICS shall automatically limit the reactor pressure and prevent SRV operation when the reactor becomes isolated following scram during 100% power generation operations. The ICS fulfills this pressure-limiting action by accomplishing heat rejection from decay heat produced steam to a sacrificial pool of water (the IC/PCC pool) located immediately outside of the containment.

- With a minimum of two of its four divisions operational, the ICS shall automatically limit the reactor pressure and prevent SRV operation when the reactor becomes isolated following scram during power generation operating levels of 80% NBR or lower.
- The ICS shall be capable of removing post-reactor isolation decay heat with 3 out of 4 IC heat exchangers operating and to reduce NSSS temperature to safe shutdown conditions of 204°C in 36 hours, with occasional venting to the suppression pool of radiolytically generated noncondensable gases beginning four hours after isolation.
- The ICS shall be capable of removing post-reactor isolation decay heat with 3 out of 4 IC heat exchangers operating and to reduce NSSS pressure below containment design conditions of 0.31 MPa in 72 hours, with occasional venting to the suppression pool of radiolytically generated noncondensable gases beginning four hours after isolation.
- Each IC heat exchanger is required to transfer not less than 30 MWt heat when the steam supplied is pure saturated reactor steam at 7.240 MPa absolute and with the IC/PCC pool water saturation temperature of 100.0°C , assuming a tube exterior (poolside) fouling factor of 0.00009 m^2-°C/W, and a tube interior (tube side) fouling factor of 0.0000. A margin of 5% for tube plugging shall be included. The pool saturation temperature is specified the same as that of the SBWR, 100°C, despite the fact that the ESBWR will have a deeper initial submergence of the IC heat exchangers in the IC/PCC pool.
- Condensate from the IC heat exchanger assuming heat rejection underway at 140% of rated capacity, shall drain by gravity through condensate return piping of ample size to produce sufficiently low pressure drop to allow full draining of the IC heat exchanger with zero backup into the vertical tube bundles.
- The external sacrificial pools (IC/PCC pool) are required to have sufficient pool water volume to evaporate an initial 72 hours of post-scram decay heat power generation (plus an allowance to account for an assumed 2% by wt. moisture carryover of the pool water evaporated). The IC heat exchangers are required to be sufficiently submerged within this pool, to withstand resulting pool draw down so as to remain capable with three of four divisions in operation of transferring decay heat at the instantaneous rate generated by the core at the end of 72 hours. This heat transfer capability shall be met assuming that noncondensable gases generated by radiolysis of water by core decay heat power generation over this 72-hour time period accumulate and partially fill the IC heat exchanger tubes, thus reducing the available heat transfer area. The effective loss in tube

heat transfer area shall be taken in proportion to the mixture concentrations by volume, assuming the noncondensable gases accumulate exclusively within both the two vertical tube banks and in the two lower drum headers but none in the upper drum headers and with zero gas being recirculated back to the reactor.

3.3.2.2 Plant Investment Protection Design Bases

- Coolant makeup from water sources connected external to the Reactor Building and supplied directly to the IC/PCC pool shall be provided by the Fuel & Auxiliary Pools Cooling System (FAPCS) via safety-related pipelines which require no valves, other than check valves, to open inside the Reactor Building.

3.3.3 Configuration and Special Features:

The IC heat exchangers, connected by 350 mm diameter steam supply piping to the RPV, are placed at an elevation above the vessel such that when steam condenses, all condensate can drain by gravity action alone back to the RPV. The steam supply connection between the RPV and the IC heat exchanger is normally open and the condensate return line, 200 mm diameter size, is normally closed. This allows the IC heat exchanger and its drain piping to fill with condensate. A small (20 mm diameter) purge line connected to the steam inlet piping and leading to a point in the main steam lines (MSL) downstream of the MSL flow limiters (built into the RPV MSL nozzles) is also normally open. When the reactor is supplying steam to the turbine, a pressure differential between the intake to this purge line and the MSL exists which thus drives a continuous small live steam flow through the IC heat exchanger steam supply line and out to the MSL, sweeping out any noncondensable gases that otherwise may accumulate in this steam supply line.

The IC heat exchanger steam supply line piping through the drywell roof slab and leading through the IC/PCC pool is guard piped the entire distance to the steam distribution branching point above the IC/PCC pool. This guard pipe is designed for the full pressure/temperature design conditions of the IC heat exchanger, so that a break in the steam supply line is fully contained. The guard pipe has sufficient clearance around the steam supply line to allow dry insulation to be installed on the outside of this steam supply pipe to prevent heat losses. Small quantities of condensate developing internal to this steam supply line simply drain back to the stub-lines provided on the RPV from which the IC heat exchanger steam supply lines originate. Condensate then drains back into the RPV itself.

The IC heat exchanger is started into operation by the opening of the motor-operated valve on the condensate return line. If signals disclose this valve has not opened within a specified interval, approximately 30 seconds stroke time, the pneumatically-operated valve located in parallel with this motor-operated valve is opened. System controls allow the reactor operator at any time to remote-manually open both of the condensate return valves of any IC heat exchanger that is aligned in its ready-standby mode.

Subcooled standing condensate that earlier filled the IC heat exchanger now drains into the RPV while the steam/water interface in the IC heat exchanger tube bundle moves to a point in the main condensate return line below the lower drum headers. The fail-open nitrogen piston-

operated condensate return bypass valve opens if the 125 V DC power is lost or on REACTOR WATER LEVEL BELOW L2 signal.

The previously-mentioned 82 mm ID flow limiters within the branch distribution piping feeding steam to the IC heat exchanger upper drum headers are sized to allow natural circulation operation of the IC heat exchanger at its maximum heat transfer capacity (that is, 140% of rated capacity) while addressing the concern of IC breaks downstream of the steam supply pipe. These flow limiters have been increased slightly (approximately 10% in diameter) from the sizes used in SBWR.

Steam is condensed inside the vertical tubes and condensate is collected in the two lower drum headers. Two pipes, one from each lower header, route condensate to a common drain line which then vertically penetrates the containment roof slab.

A vent line is provided for both lower drum headers to remove any accumulated noncondensable gases away from the unit during IC operation. The vent lines for each IC heat exchanger are routed into the containment, and then into the suppression pool, through respective single, divisional, penetrations. The opening of these vent lines are controlled by automatic logics, as well as by operator manual actuation. Venting is initiated whenever a combination of two signals is present: RPV PRESSURE HIGH, and EITHER IC HEAT EXCHANGER CONDENSATE RETURN VALVES OPEN. The former setpoint is established at approximately 170 kPa below the setpoint at which the lowest-set SRV will actuate under spring-lift condition. This helps ensure that SRVs will not actuate during a reactor isolation transient even without operator attention. This automatic mode, which involves the solenoid valves, ensures that any tendency for noncondensable gas accumulation which is not first-vented by the attentions and actions of the reactor operator, will still take place automatically, thus keeping post-isolation RPV pressure and temperature conditions well controlled. The set of bypass motor-operated vent-line valves which are normally closed in this vent line allow the operator to vent noncondensable gases in case of failure of either of the solenoid valves.

A vent line is also provided for both top drum headers, operable by remote-manual operation, if necessary. Vent line piping is designed robust and with a view toward minimizing any long runs that might accumulate condensate. This is accomplished by sloping the vent line toward the suppression pool.

IC/PCC pool water can, in the compartments housing the PCC heat exchangers, heat up to about 102°C . Steam formed is non-radioactive and has a slight positive pressure relative to station ambient. It vents from the steam space above each IC heat exchanger where it is released to the atmosphere through large-diameter discharge vents. A moisture separator is installed at the entrance to the discharge vent lines to preclude excessive moisture carryover and loss of IC/PCC pool water. IC/PCC pool makeup clean water supply for replenishing level is normally provided from the Makeup Water System. Level control is accomplished by using an air-operated valve in the make-up water supply line. The valve opening and closing is controlled by water level signal sent by a level transmitter sensing water level in the IC/PCC pool.

Cooling and cleanup of IC/PCC pool water is performed by the FAPCS. Several suction lines, at different locations, draw water from the sides of the IC/PCC pool at an elevation above

the minimum water level that is required to be maintained during normal plant operation. The water is cooled and cleaned, and is returned back to the pool.

The FAPCS provides safety-related dedicated makeup piping, independent of any other piping, which provides an attachment connection at grade elevation in the station yard outside the reactor building, whereby a post-LOCA water supply can be connected.

The IC condensate return line pipe is routed horizontally at its approach to the RPV, turning upward to extend a minimum of 0.5 m just before the line again bends into the horizontal to connect to the RPV IC Condensate Return (CR) nozzle. This feature minimizes the horizontal run at the RPV IC CR nozzle and thus minimizes the possibility for continuous circulatory-type movements of reactor coolant out of and back into the RPV driven by small temperature differences between upper and lower ligaments of the piping. This feature also ensures that the condensate return valves will not have 285°C water on one side of the disk and subcooled water possibly as low as 10°C on the other side during normal plant operation, thus affecting leakage during system standby conditions. Furthermore, this loop seal assures that steam continues to enter the IC heat exchanger preferentially through the steam riser (irrespective of water level inside the reactor) and does not move counter-current back up the condensate return line.

While the IC loops are separated into four independent safety divisions, the IC/PCC pool itself is segmented into a number of individual sub-compartments which are each interconnected by low-elevation pipe runs and openings that penetrate through the lower portions of pool sub-compartment walls. This arrangement ensures that the entire IC/PCC pool water inventory is made available to each and every IC heat exchanger. A valve is provided at the bottom of each IC/PCC pool sub-compartment that can be closed so the sub-compartment can be emptied of water to allow IC heat exchanger maintenance.

The IC heat exchangers are, as a set, never in an over-challenged condition. From the point 30 seconds (for valve opening) and onward into a post-scram isolation transient, the total heat rejection capacity of the IC heat exchangers is sufficient to remove more heat than the core decay heat production. Reactor pressure, which has risen from the 7.24 MPa nominal steam dome operating pressure level during the period the IC heat exchangers are starting up, is turned around and reduced thereafter. As the reactor pressure and therefore the saturation temperature is reduced, the resulting temperature differential across the tube from steam to pool water decreases and so does the heat rejection capability of the ICS.

The drums comprising the IC heat exchangers have gasketed removable flanges, which allow access (once the reactor has been shut down) for such maintenance actions as interior inspections of tube-to-drum welds and for plugging tubes in the event such corrective measures are needed. The IC/PCC subcompartments in which these heat exchangers are located are accessed through overhead hatches in the refueling floor. The subcompartments can be isolated, water in that sub-compartment can be removed, and then the IC heat exchangers can be serviced. However, the design expectations are that no tube plugging, or tube-to-drum weld repairs, would be required anytime during the 60-year design lifetime for these heat exchangers.

The IC/PCC pool is vented to atmosphere. Boil-off steam formed in the compartments containing IC heat exchangers are non-radioactive and has a slight positive pressure relative to

station ambient. It is exhausted to atmosphere through large-diameter discharge vents after first passing through a large face area passive-type steam dryer. Moisture removed by the dryer from this boil-off steam is ducted back to the IC/PCC pool. The face area of these moisture separators, and the vents that provide exhaust to atmosphere, are both approximately doubled relative to the size and number used in SBWR.

Four radiation monitors are provided in the IC/PCC pool steam atmospheric exhaust passages for each IC loop. They are shielded from all radiation sources other than the steam flow in the exhaust passages for a specific IC loop. The radiation monitors are used to detect IC loop leakage outside the containment. Detection of a low-level leak (radiation level above background with logic of 2 out of 4) results in alarms to the operator. At high radiation levels exceeding site boundary limits with logic of 2 out of 4, isolation of the leaking IC heat exchanger will occur automatically.

Four sets of differential pressure instrumentation are located on each IC steam supply line and another four sets on each condensate return line inside the drywell. Detection of excessive flow beyond operational flow rates in the steam supply line or in the condensate return line (2/4 signals) will result in alarms to the operator, plus automatic isolation of both steam supply and condensate return lines of the affected IC loop.

The bounding walls to the IC/PCC pool are Safety Class 2 structures. They are protected from any damage during aircraft impact or any other design basis loading event by the outer walls of the Reactor Building that are designed to withstand these design basis loads.

The schematic diagram for the ICS is included with this report section, and many of the ICS's features will be apparent from a careful study. The ICS is not an engineered safety feature (ESF), but it is a safety-related system inasmuch as it is provided to fulfill previously described safety-related missions. The ICS is constructed of stainless steel to design pressure, temperature, environmental, and thermal cycle (fatigue utilization) conditions that are projected for a full 60-year service lifetime with conservative allowances representing design margins. Based on modern BWR operating experience, it would be expected that the ICS might become actuated approximately 30 times over this 60-year lifetime.

There is one other effect that aids IC heat exchanger heat rejection capability but which is not taken credit for in the analyses of IC heat exchanger performance. At the start of operation, water that occupies the sub-compartment in which the IC heat exchanger is located will be at nominally cool (43.3°C) conditions. It will take several minutes for this water to become mixed and raised to saturation temperatures (102°C). During this time the driving differential temperatures are somewhat greater than those used by the heat exchanger designer in establishing the unit rating.

Seismic supports or braces that connect to compartment bulkheads are attached to the upper drums of the IC heat exchangers to prevent relative motions between upper and lower drums that might otherwise, during a design basis earthquake, induce significant tube wall stresses. The supports or braces are such as to allow vertical thermal growth resulting from the differences between nominal and accident temperature levels.

All ICS components and piping are constructed with nuclear grade stainless steel. The system has a design life of 60 years, except for electrical devices, which have a design life of 10 years minimum and for gaskets, seals and lubricants that are designed typically for a six-year service life.

The IC/PCC pool interfaces with the FAPCS which periodically removes and then returns cooled, purified water back into the IC/PCC pool. These functions are automatically terminated in the event of occurrence of low water level conditions inside the RPV.

3.3.4 System Operation

Normal Plant Operation

During normal plant operation, the IC sub-loop is in ready standby, with both steam supply isolation valves and both isolation valves on the condensate return line in a normally open position, condensate level in the IC heat exchanger extending above upper drum headers, condensate return valves both closed, and with the small vent lines from the IC top and bottom drum headers to the suppression pool closed.

Plant Shutdown Operation

During refueling, the IC heat exchanger is isolated from the reactor, with all isolation valves closed. The vent valves are also closed. ICS heat exchanger maintenance can be performed after closing the locked-open valve which connects any given IC heat exchanger pool sub-compartment to the common parts of the IC/PCC pool and removing pool water from that sub-compartment.

Isolation Condenser Operation

Any of the following sets of signals will generate an actuation signal for the ICS to come into operation:

- MSIV valve position on MSL A ≤ 92% OPEN,

  And

- MSIV valve position on MSL B ≤ 92% OPEN; (Reactor Mode Switch in "RUN" only)

  Note: "92% open" is the nominal setpoint value. The MSIV position minimum plant safety analytical limit is 85% open.

  OR

- RPV pressure ≥ 7.447 MPa-gauge for 10 seconds;

  OR

- Reactor water level below Level 2;

OR

- Operator remote manual initiation.

When one of these ICS initiation signals occurs, condensate return valves open within approximately 30 seconds and starts IC heat exchanger operation. The IC loop isolation valves are signaled (by these same ICS initiation signals) to open, to ensure that they take an open position during or after a test closure of the valves (unless that IC loop was previously declared out-of-service and shut-off). If two or more IC heat exchangers do not operate, the RPV steam dome pressure will over the ensuing few tens of seconds gradually increase to the SRV setpoint of 8.619 MPa .

If the RPV pressure increases above 7.516 MPa-gauge after the initial transient and during ICS operation, the bottom vent valves automatically open. When the RPV pressure decreases below 7.447 MPa-gauge (reset value) and after a time delay to avoid too many cycles, these two valves close.

After reactor isolation and automatic ICS operation, the control room operator can control the venting of noncondensable gases from each IC heat exchanger, to hold reactor pressure below safe shutdown limits.

3.3.5 Safety Evaluation

The Isolation Condenser System is used to transfer decay and residual heat from the reactor after it is shutdown and isolated. This function can also be performed by the RWCU/SDCS or Engineered Safety Features (ESF) of ADS, PCCS, and GDCS which back up the ICS. The Isolation Condenser System is designed and qualified as a safety-related system to comply with 10CFR50 Appendix A, Criterion 34 and to avoid unnecessary use of these ESFs for residual heat removal, but it is not an Engineered Safety Feature.

The ICS parts (including isolation valves) which are located inside the containment and out to the IC heat exchanger flow restrictors are designed to ASME Code Section III, Class 1, Regulatory Guide 1.26, Quality Group A. The ICS parts which are located outside the containment downstream of the flow restrictor are designed to ASME Code Section III, Class 2, Regulatory Guide 1.26, Quality Group B. The electrical design systems are designed to comply with Class 1E requirements per Regulatory Guide 1.153, and the entire system is designed to Seismic Category I per Regulatory Guide 1.29.

Three out of four ICS loops will remove post-reactor isolation decay heat and depressurize the reactor to safe shutdown conditions when the reactor is isolated after operation at 100% power.

The common cooling pool that IC heat exchangers share with the condensers of the Passive Containment Cooling System is a safety-related ESF, and it is designed such that no locally generated force (such as an IC system rupture) can destroy its function. Protection requirements against mechanical damage, fire, and flood apply to the common IC/PCC pool.

As protection from missile, tornado, and wind, the ICS parts outside the containment (the IC heat exchangers) are located in a sub-compartment of the safety-related IC/PCC pool to comply with 10CFR50 Appendix A, Criteria 2, 4 and 5.

The IC heat exchanger steam supply pipes include flow restrictors, and the IC condensate drain pipes are of limited area so that an ICS piping or tube rupture in the safety-related IC/PCC pool will limit flow-induced dynamic loads and pressure buildup in the IC/PCC pool. Penetration sleeves are used at the locations where the ICS steam supply and condensate return pipes enter the pool at the containment pressure boundary.

The ICS valve actuators are to be qualified for service inside the drywell for continuous service under normal conditions and to be operable in a DBA environment. Thereafter, the valves are required to remain in their last position.

The ICS steam supply lines, condensate return lines, instrument lines, and vent lines that penetrate containment are provided with isolation valves to satisfy containment isolation requirements.

3.3.6 Testing and Inspection Requirements

Inspection

During plant outages, routine inservice inspection (ISI) is required for the IC heat exchanger, ICS piping, containment penetration sleeves, and IC heat exchanger supports according to ASME Code Section III and Section XI (requirements for design and accessibility of welds).

IC heat exchanger removal for routine inspection is not required.

Ultrasonic inspection is required for IC heat exchanger tubes/headers welds. IC heat exchanger tubes will be inspected by the eddy current method.

Testing

Periodic heat removal capability testing of each IC heat exchanger is required during plant operation. This test is facilitated by provision of a temperature element located downstream of the condensate return line isolation valve, that feeds signals to a temperature recorder located in the main control room, together with a differential pressure sensor located on the condensate return line that feeds signals to a dPT recorder also located in the main control room.

During normal plant operation, a periodic surveillance test of each of the normally-closed condensate return valves, being moved into an open condition, will be performed. The test procedure for the condensate return valves starts after the condensate return line isolation valves are closed. This avoids subjecting the IC heat exchanger to unnecessary thermal heatup and cooldown cycles. Isolation valves on the steam supply line are kept open to avoid IC loop depressurization. The test is performed by the control room operator via remote manual switches

that actuate the isolation valves and the condensate return valves. The opening and closure of the valves is verified by their status light.

The procedure is as follows:

1. Close the condensate return line isolation valves.

2. Fully open and subsequently close the condensate return valves.

3. Reopen isolation valves to return the IC heat exchanger to standby condition.

The condensate return line isolation valves and the steam supply line isolation valves will also be tested periodically, one at a time.

If a system actuation signal occurs during the test, all the valves will be aligned automatically to permit the IC heat exchanger to start operation.

Each vent valve will also be periodically tested.

The valves, which are located in series will be opened, one at a time, during normal plant operation. A permissive is provided such that the operator can open one vent valve if the other one in series is closed.

The purge line root valve will also be periodically tested.

3.3.7 Instrumentation Requirements

The following paragraphs give a brief description of the instrumentation and control logic for each of the four ICS divisions.

Four radiation sensors are installed in each IC pool exhaust passage leading to the outside vent lines that vent the air and evaporated coolant (vapor) to the environment. These sensors are part of the Leak Detection and Isolation System. On a HIGH RADIATION signal coming from two of the four divisional radiation monitors installed near each IC heat exchanger sub-compartment, all the lines from and to the IC heat exchanger are isolated. This means closure of isolation valves. The high radiation could be due to a leak from any IC heat exchanger tube causing a subsequent release of noble gas into the airspace above the water surface within the sub-compartment.

Four sets of differential pressure instrumentation on each steam supply line and another four sets on each condensate return line are used to detect a possible LOCA. HIGH dPT signals coming from two of four differential pressure transducers (dPTs) on the same line (steam or condensate) closes all isolation valves and therefore renders the IC heat exchanger inoperable.

The operator cannot override either the HIGH RADIATION signals from the ICS sub-compartment atmospheric vent lines or the HIGH dPT signals coming from the ICS steam supply or condensate return pipe flow elements.

A temperature element is provided in each vent line, downstream of the valves, to confirm vent valve function. These temperature elements send a signal to a temperature recorder located in the control room.

Temperature elements are provided in the condensate return line downstream of isolation valves and at the bottom and the top of the condensate line at the RPV connection. These temperature measurements provide information on temperature stratification in the piping. Each temperature element is connected to a temperature recorder located in the main control room.

A temperature element is also provided in the upper part of the IC heat exchanger steam supply line in the drywell that can be used to confirm the steam line is near the steam saturation temperature in the RPV and is therefore largely free of non-condensible gases.

A test connection with an end cap is provided at the upstream side of the outer isolation valve on the steam supply line, to mount a test pressure indicator and perform leak tests on steam supply line isolation valves.

A test connection with an end cap is provided at the downstream side of the outer isolation valve, on the condensate return line to mount a test pressure indicator and perform leak tests on the condensate return line isolation valves.

A test connection with an end cap is provided upstream of the motor-operated valve to mount a test pressure indicator and perform leak tests on excess flow valve.

3.4 Standby Liquid Control System

3.4.1 Description and Functioning of System

The Standby Liquid Control System (SLC System) is a back-up reactivity control system that fulfills for the ESBWR reactor design the US requirements specified in 10CFR50, Appendix A, "General Design Criteria for Nuclear Power Plants" regarding need for an alternate shutdown control system to the commonly used mechanical control rod drives. The SLC System also meets applicable requirements found in 10CFR50.62, "Requirements for Reduction of Risk from Anticipated Transients Without Scram (ATWS) Events for Light-Water Cooled Nuclear Power Plants". The SLC System for ESBWR is shown in the "ESBWR Standby Liquid Control System - Schematic Diagram" that accompanies this report section.

The SLC System is capable of quickly injecting a solution of isotopically-enriched (in the Boron-10 isotope) sodium pentaborate into the reactor. Boron in sodium pentaborate acts as a "neutron poison", reducing and halting sufficiently the fissioning process. Boron is also used in the normal control rods located in the core. The reactor under one of its most challenging design basis events (an ATWS) is driven to a subcritical reactivity condition in sufficient time to retain sufficient original reactor coolant to prevent uncovery of the core height.

The Isolation Condenser System (ICS System) and the Control Rod Drive System (CRDS)--provide either a return-of-coolant (in the case of the former) or a make-up source of coolant (in the case of the latter) that ensures the core remains well covered over the longer phases of the ATWS event. The event ends once the reactor has become completely depressurized and brought to a safe-shutdown condition.

The SLC System for ESBWR features twin SLC loops, each of which is a basic duplicate of the single SLC System for the SBWR design. The doubling of SLC System size--two SLC loops instead of just one--for ESBWR results because ESBWR has nearly twice the initial mass of coolant (and reactor coolant holding capability) at its 7.1 m diameter size, than was the case for the SBWR with its 6.0 m diameter size reactor pressure vessel (RPV). The designer's decision to use twin SBWR SLC loops, instead of just doubling the size of one SBWR loop, was based mainly on economic considerations aimed at obtaining lowest total evaluated generation cost impact.

Each SLC loop contains a large accumulator-type tank filled to approximately one-third of its height with the enriched, room-temperature, unheated borated-water solution--the liquid poison--at concentrations sufficiently low as to prevent precipitation of the solute. This solution is pressurized with nitrogen cover gas at approximately 160 Ata , that occupies the upper two-thirds of the accumulator. Injection piping which contains a redundant set of normally-closed pyrotechnic-type squib valves communicates the bottom of the accumulator with a respective RPV SLC injection nozzle connection. Inside the RPV is small-diameter piping that leads downward from this nozzle inside the reactor downcomer region (outside the core shroud) to convey the pressurized solution to a header attached to the shroud which in turn supplies a series of SLC injection nozzles that penetrate the core shroud wall. These injection nozzles are shaped and sized to jet the poison solution at high velocity into the core bypass region. Jetting action results in excellent mixing of the liquid poison with water present in the core bypass region.

Coolant that is undergoing boiling within the fuel assemblies even with the feedwater-runback produced reduced-power production condition of the ATWS-caused core, is replenished by manometer-type action with coolant standing outside the fuel assemblies in the core bypass region that had become mixed, by the high-velocity jetting, with the injected liquid poison. By this continuing action, the core is driven to subcriticality with only a short time-lag relative to the quickness with which this poison solution jets into the core bypass.

The SLC System is passive, meaning that no high pressure injection pump nor external standby AC power is needed for the injection. The only power required is safety-related DC power for igniting the squib pyrotechnic charges.

ATWS events comprise a range of transients all characterized by entry into the event due to a transient (with the range of defined transients extending down to 0.02 per year in postulated occurrence frequency) and not due to an accident (e.g., broken pipe). The ATWS event is conventionally dealt with, using scenario-available equipment but without imposition of the single-active-failure rule that is found with loss-of-coolant accidents. No operator action is assumed over the transient. The most challenging ATWS event generally presumes a sudden closure of all MSIVs, to which the NSSS protective logics respond by generating SCRAM signals. But since by assumption SCRAM hasn't occurred, then in the first few seconds of this transient the reactor vessel dome pressure rises to service level-C limits (approximately 120% of design pressure,) and all safety-relief valves (SRVs) have opened to relieve reactor steam to the suppression pool. When safety system logics have detected (a few seconds later) conditions indicating that SCRAM has not occurred, an ATWS signal is generated that causes a feedwater runback and an interlock is produced preventing against ADS (Autodepressurization Subsystem) initiation as well as preventing initiation of GDCS injections (for later, when the reactor has become depressurized). When feedwater runback occurs, reactor power decreases somewhat from its pre-event 100% power level and pressure decreases somewhat from the prior level-C pressure.

Meanwhile, isolation condensers come on line, and as soon as they begin rejecting heat, their combined action causes a further reduction in reactor pressure that allows some of the high-setpoint SRVs to close. The reactor remains at high (nominally: normal to slightly above-normal operating) pressure. The two-phase water level inside the core shroud drops as steam is blown out the SRVs, eventually lowering to below the top-of-active-fuel, and while this is happening the rate of steam production now further reduces until core power level is reduced to below the heat rejection capability of the ICS System alone, at which point remaining SRVs then close. A three-minute time delay is used to determine if either ARI (Alternate Rod Insert) or FMCRD (fine-motion control rod drive) run-in has occurred. If the high-neutron-flux signal to the ATWS logic (NEUTRON FLUX >= 6%) is still present, then the squib valves in the SLC System are fired-open and injection of poison begins. The Reactor Water Cleanup/Shutdown Cooling System (RWCU/SDCS System) is isolated upon initiation of the SLC System to prevent removal of any of the neutron poison. Long before the SLC accumulators have injected even one-half of their liquid poison contents, the poison concentrations inside the core bypass and lower plenum regions reach levels sufficient to drive the core completely subcritical. Once subcriticality is established, reactor pressure decreases fairly rapidly to just a few ata as core decay heat and fuel (and RPV and its internals) sensible heat is rejected through the ICS System to the IC/PCC Pool

outside containment. Complete injection of the liquid contents of the SLC accumulator takes place in less than 10 minutes. Small amounts of CRD flow being added to the reactor throughout this time period provide a deliberately slow (to ensure good mixing) recovery of reactor coolant level. Cladding temperatures remain below the limits at which any fuel rod damage is considered to occur. The SLC accumulators continue to discharge the balance of their liquid poison inventory into the core to ensure the core remains subcritical even after unborated water injections from the CRDS bring reactor water levels back up to the level of the main steam lines (MSLs). CRDS System injections, in fact, are stopped automatically once reactor water levels reach Level-8 levels; the assumption of water levels reaching the MSLs is just to provide design margin.

3.4.2 Design Bases

3.4.2.1 Safety Design Bases

- The SLC System shall provide backup capability for reactivity control independent of normal reactivity control provisions in the nuclear reactor and shall be able to shut down the reactor if normal control ever becomes inoperative. The SLC System shall be classified as a safety-related (but not an emergency) system. It shall be comprised of two SLC liquid poison injection loops designed as safety-related divisions that are electrically, mechanically, and physically separated in accordance with applicable design rules for separating safety-related divisions and which are designed also as Seismic Category I systems.

- The SLC System shall be a "passive-acting" system, in that the performance of its safety-related mission shall be driven exclusively via stored-energy sources; the SLC System in performing this mission shall not utilize any rotating equipment, nor valves requiring multiple position changes during the mission, nor be reliant upon AC power supplied by either offsite power sources or on-site standby AC power sources, nor require control actions to be initiated or executed by the control room operator other than system initiation that requires simultaneously pressing two key-locked switches at the main control panel. (System initiation under ATWS mission conditions is automatic and requires no operator actions.)

- The SLC System shall have full capacity for controlling the reactivity difference between the steady-state rated operating condition of the reactor with voids and the reactor cold shutdown condition, including shutdown margin, to assure complete shutdown from the most reactive conditions at any time in core life. For meeting this (non-ATWS) safety-related function, the SLC System shall be manually initiated from the main control room to inject a boron neutron absorber solution into the reactor if the operator determines the reactor cannot be shut down or kept shut down with the control rods.

- The time required for actuation and effectiveness of the SLC System shall be consistent with the nuclear reactivity rate of change corresponding to the normal reactor rate of cooldown and depressurization and the accompanying influence of xenon decay. However, a "fast scram" of the reactor or operational control of fast reactivity transients is not specified to be accomplished by the SLC System.

- Means shall be provided to assure the capability of the SLC System to respond to an initiation demand, by confirming an adequate accumulator pressure and an adequate solution level, and initiating circuit continuity and proper valve positions. Additional measures shall be capable of being taken during plant shutdown to confirm injection valve operability through in-position or in-laboratory firing tests of (as a minimum) the pyrotechnic charges. Provisions shall be made to confirm an absence of obstructions in the flow path, and to confirm adequacy of the solution concentration during plant operation.
- The SLC System shall employ a suitable neutron absorber solution which shall be injected at multiple locations into the core bypass region at high velocity to assure adequate mixing, and total injection shall be such as to assure reactor shutdown.
- The safety-related performance requirements for the SLC System are known to be bounded by its mission requirements during an ATWS event. Specific system performance shall not be less than that needed to meet this ATWS mission.

3.4.2.2 Plant Investment Protection Design Bases

- The system shall be reliable to a degree consistent with its role; the possibility of unintentional or accidental shutdown of the reactor by this system shall be minimized.
- The SLC System design shall provide a high degree of protection against discharge of nitrogen into the core.
- All components of the SLC System in contact with the boron solution shall be constructed of, or lined with, stainless steel.

3.4.3 Configuration and Special Features

The safety-related portion of the SLC System is comprised of two (twin) loops of the following components and groups of components (see the "ESBWR Standby Liquid Control System - Schematic Diagram" associated with this section):

- An accumulator tank operating at compartment ambient temperature containing a volume of a 12.5% solution of sodium pentaborate with the boron content enriched to 94% of the B10 isotope, sufficient to ensure injection of at least 7.8 m^3 of solution.
- A piping subsystem for nitrogen charging and sparging of the solution with valves, controls, and logic necessary to maintain 11.3 m^3 of nitrogen cover gas at a minimum absolute pressure of 14.82 MPa-abs in the accumulator.
- A pressure relief line and valve to prevent nitrogen pressure from exceeding the accumulator design pressure.
- An SLC accumulator vent subsystem to permit depressurization of the accumulator for access or after completion of solution injection.

- An injection line with valves, controls, and logic to assure manual or automatic injection, and post injection closure of the line. The injection line is an 80 mm nominal diameter stainless steel line designed for 17.24 MPa-gauge internal pressure with corresponding ratings for the valves.
- Redundant level instrumentation to assure presence of adequate solution inventory and to initiate closure of the injection line on completion of solution injection.
- A poison solution line used for initial charging and any necessary periodic makeup to the accumulator.

In addition to these safety-related system components, the SLC System also includes the following (shared) subsystem, which is not safety-related:

- A pressure-regulated nitrogen charging system operating from a liquid nitrogen tank, vaporizer, and compressor high pressure pump for initial accumulator charging or from a package of nitrogen gas bottles to and makeup for the normal, but very small, system losses during normal plant operations.

The SLC System also requires support from the following safety-related systems:

- Power from the Class 1E 125 VDC power system;
- Initiation signals to trigger automatic initiation;
- An RPV internal sparger subsystem--one to serve each SLC loop--each consisting of a 50 mm SLC-to-RPV nozzle, a 50 mm internal injection line, a distribution manifold which in turn supplies four injection sparger-runs, each such sparger-run having four nozzles spaced over the lower half of the active core height and that penetrate the core shroud to discharge into the core bypass volume to assure uniform solution injection, each nozzle having two jet-openings angled outwardly from each other. To prevent water hammers in the injection line, the line is continuously vented by a 4 mm ID hole inside the RPV close to the penetration.
- Instrumentation and alarms to assure conformance to equipment environmental qualification constraints.

In addition, support is required from the following non-safety-related functions:

- Control of the equipment compartment temperature and humidity conditions to assure proper equipment operation and avoidance of solute precipitation in the accumulator or injection line. This compartment is provided with backup room heating to assure no losses of plant availability due to normal compartment HVAC systems being temporarily out-of-service.

The bulk of the safety-related SLC equipment is located within two divisionally separated compartments of the Reactor Building except for the portion of the injection line(s) that leads to the RPV and therefore passes through containment. The non-safety-related nitrogen poison solution charging and makeup equipment is located in the Auxiliary Building.

Those portions of the SLC injection line downstream of the squib valve contain only cold stagnant reactor grade water. To prevent water hammers, the squib valves are located at the lowest points of the injection piping runs. A high-point vent is provided on both sides of these squib valves.

The SLC squib valves are similar, except for pressure rating and inlet/outlet size, to the squib valves used on Standby Liquid Control Systems of many previous BWRs. These ESBWR SLC valves are forged stainless steel, 17.24 MPa-gauge design pressure rating, with 80 mm inlets and outlets, with the internal passage reducing to a nominal 50 mm throat area. Each squib valve has two valve-actuating squibs (pyrotechnic charges), only one of which needs to fire to open the valve. The squibs are energized by respective independent, safety-related DC power divisions, which will ignite the actuator pyrotechnic charge.

The SLC accumulator vent subsystem has a series-pair of solenoid-operated valves operable from the main control room and an in-line pressure-reducing orifice. The nitrogen discharge is conveyed to the reactor building stack.

The preparation station for the sodium pentaborate solution includes a mixing drum and a high pressure piston pump. The preparation process is performed by qualified plant personnel using the mixer and electrical heating. Measured quantities of the 94% isotopically enriched (in the B^{10} isotope) boric acid (H_3BO_3) and borax ($Na_2B_4O_7 \cdot 10H_20$) chemicals are mixed in batches together with demineralized water to form a 12.5 wt% solution of sodium pentaborate ($Na_2B_{10}O_{16} \cdot 10H_20$) and, following confirmation of chemical condition, then pumped into the selected accumulator via respective fill piping. Solution precipitation temperature is approximately 13° C F so electrical heating is used to assist the process of achieving completion dissolving. The mixing station is sized for a batch size of approximately 1.75 m^3. Initial filling of the 7.8 m^3 liquid poison inventory in a given SLC accumulator is done by preparing five batches of solution. The pump can charge as well as makeup accumulator liquid poison inventory at full accumulator operating pressure.

The high pressure cryogenic nitrogen gasification subsystem consists of a liquid nitrogen piston pump with gas trap vessel, a pressure buffer and an electrically heated vaporizer. The liquid nitrogen will be delivered by the Containment Atmospheric Control System (CACS) liquid nitrogen storage tank.

Electrical heating of the accumulator tank and the injection line is not necessary since the saturation temperature of the solution is well below 15.5° C , and the equipment room temperature will be maintained above that value at all times when SLC injection could be required. While adiabatic expansion of the cover gas can lead to temperatures below the saturation value, the low rate of heat transfer between cover gas and solution and the rapid rate of injection of the solution assure that neither precipitation nor freezing influences will affect the solution injection process or its effectiveness.

The accumulators are manufactured from stainless-clad carbon steel material which has plentiful margin between the lowest temperature that is reached by the expanding nitrogen gas during poison injection and the material's NDT (nil ductility temperature). The accumulator has a total volumetric capacity of 24.5 m^3 , and is configured as an upright cylindrical vessel having

an ID of 2,540 mm . The accumulators are provided with a flanged and bolted access manway located in the lower (liquid-filled) region of the cylindrical part of the accumulator vessel.

The rapid-shut-off valve that is located just downstream of the accumulator is locked-open during plant power generation operations; the valve is then locked-closed during plant shutdown.

The SLC injection line pipe is routed horizontally at its approach to the RPV, turning upward to extend a minimum of 0.5 m just before the line again bends into the horizontal to connect to the RPV SLC nozzle. This feature minimizes the horizontal run at the RPV SLC nozzle and thus minimizes the possibility for continuous circulatory-type movements ("thermal striping") of reactor coolant out of and back into the RPV, these slow flows being driven by small temperature differences between upper (0 degree) and lower (180 degree) ligaments of this piping.

The schematic diagram for the SLC System is included in Appendix A. The SLC is not an engineered safety feature (ESF), but it is a safety-related system inasmuch as it is provided to fulfill previously described safety-related missions. The SLC is constructed of stainless steel to design pressure, temperature, environmental, and thermal cycle (fatigue utilization) conditions that are projected for a full 60-year service lifetime, and with conservative allowances representing design margins. Based on modern BWR operating experience, it would be expected that the SLC System will never become actuated over this 60-year lifetime.

All SLC System components and piping are constructed with nuclear grade stainless steel. The system has a design life of 60 years, except for electrical devices which have a design life of 10 years minimum and for gaskets, seals and lubricants that are designed typically for a six-year service life.

With recognition that the isotopically-enriched solution has high economic value and experiences few if any lifetime degeneration processes to change solution poison values, means are provided to drain the SLC accumulators to special portable stainless steel containers that will facilitate eventual re-use of the removed poison solution if upon testing the discharged solution proves to be within chemical and isotopic specification limits.

3.4.4 System Operation

Normal Plant Operation

During normal power generation operations, each SLC loop is in a "ready-standby" mode, with all loop injection (squib) valves unopened and all upstream and downstream valves aligned to a "opened, capable to inject" position. The accumulator is maintained at a pressure between 15.2 and 15.5 MPa -gauge and at a level between 2,148 and 2,188 mm Once monthly, the sodium pentaborate solution in the accumulator will be mixed for a minimum of one hour by recirculation through the mixing pump, operated from local panels. At an appropriate time during this process, a sample of the solution will be taken to verify the solution concentration meets technical specification requirements. Through appropriate operator procedures, poison solution may be added, and accumulator pressure may be adjusted, to bring solution level and accumulator pressure within technical specification limits.

Plant Shutdown Operation

During reactor shutdown the SLC System is normally unavailable, with the shutoff valve that is located just downstream from each accumulator being closed and locked.

SLC System Operation: Safety-Related Mission

The safety-related mission for the SLC System (ATWS mitigation being categorized as a non-safety-related mission) is to shut down the reactor and keep the reactor from going critical again as it cools. This safety-related function is needed only in the improbable event that not enough control rods can be inserted in the reactor core to accomplish shutdown and cooldown in the normal manner.

Whenever the operator determines the reactor cannot be shut down or kept shut down with the control rods, he can manually initiate SLC System operation from the main control room . Actuation requires concurrent depression of dual manual initiation switches, located such that a single operator can readily initiate the system, that are of a recessed, spring-loaded, rotate-and-push type and which have protective switch covers. This action sends firing signals to both squib valves in both SLC loops; but for conservatism it is assumed only one valve in each SLC loop opens. Injection quantities will proceed at rates > 5.43 l/s until approximately half the solution inventory of the accumulator has been discharged. During this process the solution will jet into the core bypass region at velocities of approximately 30 m/s , thus assuring adequate mixing.

During injection the pressurized nitrogen gas will expand adiabatically and will be cooled down to approximately -20° C . Because the injection lasts less than 10 minutes, the lowered gas temperature will have no effect on the solution discharged from the injection piping at the bottom of the accumulator vessel. After injection the vessel, gas and fluid temperature will slowly come back into equilibrium and re-warm as heat is acquired from the compartment.

Because this safety-related mission is bounded by the more-demanding, non-safety-related ATWS mitigation event requirements, system operation is described in further detail in the paragraphs below.

Emergency Operation: ATWS Mitigation Mission

For ATWS events involving failure of control rods to insert in response to a valid trip demand, the SLC will be automatically initiated by the average power range monitor (APRM) not downscale (< 6%) and one of the following conditions persisting for at least 3 minutes:

- high reactor dome gauge pressure of 7.76 MPa-gauge ; and
- low reactor vessel water level (Level 2).

This initiation will assure a timely accomplishment of the hot shutdown condition and, with subsequent injection as the reactor depressurizes, will bring the reactor to cold shutdown with no re-occurrence of critical conditions.

For the ATWS mitigation function of the SLC System, the reactor absolute pressure is (conservatively) assumed to be at 8.61 MPa-abs . At this pressure the initial injection flow rate will be approximately 18.4 l/s, corresponding to 28.4 m/s average jet velocity issuing from the SLC sparger holes. If the reactor absolute pressure remains constant at 8.61 MPa-abs, the total solution injection is 5.4 m^3 of the total boron solution inventory. This is accomplished by the adiabatic expansion of the nitrogen cover gas, expanding down to the 8.61 MPa-abs pressure that the reactor is remaining at. This 5.4 m^3 becomes injected within about 600 seconds.

The 5.4 m^3 injection quantity (from each accumulator) corresponds to an equivalent natural boron concentration of greater than 1600 ppm based on a reactor hot shutdown liquid inventory calculated based on reactor coolant level extending up to the first possible overflow elevation within the RPV main steamline nozzle with its built-in flow limiter. Since coolant levels are actually much below this elevation early in the ATWS transient, the 1600 ppm value is reached long before the 5.4 m^3 injection process is completed. This level of performance assures a very rapid termination of fission power generation for the ATWS-related function of the SLC.

Total injection of the 7.8 m^3 available solution inventory from each accumulator would result in an equivalent natural boron concentration of well over 1100 ppm at cold shutdown conditions with water level at this same main steam line nozzle condition. This concentration will assure maintaining shutdown reactivity even after initiation and operation of the shutdown cooling system. Injection of the entire 7.8 m^3 boron solution inventory would be accomplished within a short time of reducing the reactor absolute pressure to 6.9 MPa-abs or less. At this value of reactor pressure, the initial nitrogen cover gas charge in the accumulator expands sufficiently to fully expel the full solution volume in the accumulator (7.8 m^3).

As the solution level in the accumulator drops within a pre-set distance above the connection to the beginning of the injection piping, redundant accumulator level measurement instrumentation using 2-out-of-3 logic will close the injection line rapid-shut-off valve. Several tens of liters of residual liquid solution will be trapped upstream of this shut-off valve, providing a good, long-term liquid seal at this valve for preventing any passage of nitrogen cover gas from the accumulator into the reactor vessel. This avoids any prospective temporary loss or reduction in the heat rejection effectiveness of the isolation condensers (ICs) that might be caused by noncondensibles (nitrogen cover gas) being present with reactor steam.

Failure of this shut-off valve to close, however, does not necessarily have any important long-term detrimental effect, as the ICs each have purge lines from both upper and lower drum headers well capable of swiftly removing any noncondensibles present in the ICs, once actuated by the reactor operator. Further, once the solution level has dropped to the accumulator low-set-point, operation of the SLC accumulator vent valves quickly vents off accumulator pressure and thus (by dropping accumulator cover gas pressure below reactor pressure) very effectively prevents any nitrogen from being injected into the reactor vessel.

3.4.5 Safety Evaluation

The SLC System is a reactivity control system and is maintained in an operable status whenever the reactor is critical. The system is never expected to be needed for safety reasons because of the large number of independent control rods available to shut down the reactor.

Reliability of the SLC System is assured by redundancy in the injection valves as well as by the extraordinarily high component reliability of this type of component. Adequate functioning of the system for its safety-related mission is assured if only one of the two injection valves open in each SLC loop. No other function is required for proper system operation. Addition of nitrogen to recover gas pressure after initial injection is not necessary for adequate functioning of the system. Protection against inadvertent premature operation of the shut-off valve is assured by use of redundancy in the initiation signal for this function.

The system is designed to bring the reactor from rated power to a cold shutdown condition at any time in core life. The reactivity compensation provided will reduce reactor fission power from rated to zero (= hot standby) and allow cooling of the nuclear system to below cold shutdown temperature (= cold shutdown), with the control rods remaining withdrawn in the rated power pattern. These conditions (hot standby and cold shutdown) include, where applicable, the reactivity gains that result from complete decay of the rated power xenon. They include the positive reactivity effects from eliminating steam voids, changing water density from hot to cold, reduced Doppler effect in uranium, reducing neutron leakage from boiling to cold, and decreasing control rod worth as the moderator cools.

The minimum uniformly mixed equivalent concentration of natural boron required in the reactor core to provide adequate cold shutdown margin, after operation of the SLC, is 700 ppm (parts per million). Calculation of the minimum quantity of isotopically enriched sodium pentaborate to be injected into the reactor is based on the required 700 ppm equivalent natural boron concentration in the reactor coolant at 20° C and reactor water level conservatively taken at the elevation of the bottom edge of the main steamlines. This result is then increased by a factor of 1.25 to provide a 25% general margin to discount potential nonuniformities of the mixing process within the reactor. That result is then increased by a factor of 1.15 to provide a further margin of 15% to discount potential dilution by the RWCU/SDCS System when activated in the shutdown cooling mode.

Cooldown of the nuclear system will require a minimum of several hours to remove the thermal energy stored in the reactor, reactor water, and associated equipment. The controlled limit for the reactor vessel cooldown is 55.6° C/h , and normal operating temperature is approximately 288° C . Use of the main condenser and various shutdown cooling systems normally requires 10 to 24 hours to lower the reactor vessel to room temperature of 20°C . Although hot shutdown is the condition of maximum reactivity, cold shutdown condition is associated with by far the largest total water mass in which the particular shutdown concentration must be established, and so it is this latter condition which sets the total mass of neutron absorber solution that must be injected.

The extremely rapid initial rate of isotopically enriched boron injection assures that hot standby boron concentration will be achieved within several minutes of SLC initiation based on initial reactor water inventory. Maintaining normal water level with voids collapsed will cause some dilution of this concentration but would not cause hot shutdown concentrations to be violated. Then as the reactor cools and begins to depressurize, completion of all neutron absorber solution injection occurs long before cold shutdown temperatures are reached. The high injection velocity out of the injection spargers and the natural circulation flow within the

reactor vessel will assure very efficient mixing and distribution of the boron throughout the reactor vessel.

The SLC does not require ac power for design basis operation. Only 1E 125 Vdc power is required. Environmental conditions to assure that precipitation of solute does not occur do not require operation of the safety envelope HVAC systems over the time period during which SLC operation could be required.

The initial accumulator tank inventory of compressed nitrogen is fully adequate to assure full injection of the solution inventory at a reactor pressure of 6.9 MPa -gauge.

The accumulator cannot cause reactor vessel overpressurization, either from the direct effects of nitrogen injection or from reduction in heat removal capability of the ICs caused by noncondensables, both because of the operation of the shut-off valve and the operation of SRVs, should the shut-off valve fail. Interference with IC operation by nitrogen injection into the reactor vessel is overcome by operation of the IC condenser unit venting subsystem, which assures recovery of the IC function.

The SLC parts (including isolation valves) which are necessary for injection of neutron absorber into the reactor are designed to ASME Code Section III, Class 2, Regulatory Guide 1.26, Quality Group B except those portions which are part of the reactor coolant pressure boundary, in which case they are designed to Class 1, Quality Group A. The control, instrumentation and logic systems necessary for injection are designed to comply with Class 1E requirements per Regulatory Guide 1.153, and the substantial majority of the system is designed to Seismic Category I per Regulatory Guide 1.29.

The SLC System injection lines that penetrate containment are provided with isolation valves to satisfy containment isolation requirements.

It should be noted that the SLC is not required to provide a safety function during any postulated pipe break events. This system is only required for extremely low probability events, where all of the control rods are assumed to be inoperable while the reactor is at normal full power operation.

This system is used in ATWS events presented in certain analyses typically published in Chapter 15 of a Standard Safety Analysis Report (SSAR). The ATWS events are extremely low probability non-design basis postulated incidents. The analyses given there are to demonstrate additional plant safety considerations far beyond reasonable and conservative assumptions.

3.4.6 Testing and Inspection Requirements

Testing

The SLC System is a two-loop system requiring in each loop only the firing of one among a set-of-two pyrotechnic-type (squib) injection valves and no dynamic equipment for operation

under design conditions. Assurance that design conditions are maintained is accomplished by critical parameter alarms and periodic surveillances. A small, trickle current circuit is used at each squib charge and automatic testing is done (typically every 30 minutes) to verify circuit continuity for receiving firing signals.

Critical parameters (accumulator level and pressure) are alarmed and recorded in the control room to minimize any period during which system operability could be compromised.

Valves not critical to system initiation, including the rapid-shut-off valves, the accumulator vent valves, and the accumulator relief valve, will be periodically tested to assure operability.

An SLC System preoperational test, is expected to be conducted on each loop to demonstrate adequate system performance.

During bi-annual plant shutdowns, the pyrotechnic charges (which as a minimum have a four-year service lifetime and a four-year pre-service shelf-life) are replaced in the injection line squib valves. Replacement is done without any opening of the reactor coolant pressure boundary (RCPB).

Later, in the laboratory, the removed charges are tested to confirm end-of-life capability-to-function-upon-demand. These pyrotechnic charges are inserted in a small pressure chamber unit having a pre-measured volume and which is instrumented with rapid-response pressure transducers. Electrical signals typical of squib actuation signals are applied to the charges to fire them, and pressure response traces are recorded and then examined to establish potency against pre-established values.

Access for charging the accumulator with boron solution, draining the accumulator, and taking solution samples from the accumulator will be provided. Fill-and-drain and makeup operations are intended to be very infrequent operations (several year intervals). Periodic samples will be taken to assure acceptable solution characteristics. Charging the solution inventory is performed with the accumulator initially depressurized. Provision is made for a minimum of 8 sample withdrawals without a requirement for makeup. Sample taking and topping off the solution inventory may be done with the accumulator at full pressure.

Inspection

During certain (but not all) plant outages, routine inservice inspection (ISI) is required for the SLC System piping, containment penetration sleeves, and accumulator vessel and its supports according to ASME Code Section III and Section XI (requirements for design and accessibility of welds).

3.4.7 Instrumentation Requirements

The instrumentation and control system for the SLC System is designed to allow the injection of liquid poison into the reactor and to assure that the liquid poison solution and its cover gas are maintained within the allowable range of initial conditions to achieve full solution injection upon demand.

Because of the passive nature of the system and the short operating time for the system, no provision is made for flow measurement. Status of injection is provided by control room indication of accumulator pressure and accumulator solution level. Both of these parameters are direct and independent indicators of injection quantity given normal operation of the system. Because of the high rate of injection by this system, verification of injection is almost immediately available (< 30 sec) by observation of accumulator level. The verification can be confirmed by observation of accumulator pressure, also a direct measure of injection under conditions of normal, unfaulted system operation.

Closure of the injection shut-off valve is automatically initiated by the accumulator level instrumentation using 2-out-of-3 logic. Closure, or override, of the automatic closure initiation may also be initiated manually from the control room.

Operation of the accumulator vent system is manual from the control room. Operation of the accumulator nitrogen charging, and make-up makeup system to accommodate small losses is automatic manual, initiated from local panels. Control room alarms are provided for high, or low, and low-low conditions of accumulator pressure and low and low-low conditions of accumulator solution level. At low level conditions, the nitrogen and poison solution makeup systems are manually started.

Instrumentation consisting of accumulator temperature, solution level, and accumulator pressure is provided locally inside the accumulator room.

The status of all valves, vital to the operation of the system, are provided in the main control room.

3.5 Reactor Water Cleanup/Shutdown Cooling System

3.5.1 Description and Functioning of System

The basic functions of the Reactor Water Cleanup/Shutdown Cooling System (RWCU/SDCS) include the following:

- Purification of the reactor coolant during normal operation and shutdown;
- Supplemental reactor cooling when the reactor is at high pressure in the hot standby mode;
- Reactor water inventory adjustment during startup, shutdown, and in the hot standby mode;
- Inducement of reactor coolant flow from the reactor vessel bottom head to reduce thermal stratification during startup;
- Shutdown cooling with capability for reaching cold shutdown conditions; and
- Primary coolant heating for RPV hydrostatic testing and reactor startup.

Key RWCU/SDCS components and design features are shown in the "ESBWR Reactor Water Cleanup/Shutdown Cooling System - Schematic Diagram", located in Appendix A.

The RWCU/SDCS is comprised of two independent pump-and-purification equipment trains with independent intake and return piping connections to the reactor. Train "A" is shown in the schematic diagram. The major components of each train are a high capacity pump for shutdown cooling operations, a lower capacity pump for cleanup operations, a regenerative heat exchanger (RHX), a non-regenerative heat exchanger (NRHX), a demineralizer, and a startup heater. The equipment trains are redundant in the sense that each, operating alone, is designed to achieve and maintain the reactor water quality within design specifications. The system processes the water in the primary system during all modes of operation including startup, normal power generation, cooldown, and shutdown. In the cleanup mode, the capacity of each train is 21.6 kg/sec corresponding to 1% of the rated feedwater flow rate. With both trains operating, the RWCU/SDCS can process, i.e. purify coolant taken from the reactor, at a rate of 43.2 kg/sec, corresponding to 2% of the rated feedwater flow. The electrical power supplies to the two trains are from separate electrical divisions.

The reactor water cleanup function is performed by the RWCU/SDCS during normal power generation, startup, cooldown, and shutdown. During normal plant operation, the system continuously recirculates Reactor Pressure Vessel (RPV) water, taking suction from both the mid-vessel region and also the bottom head region of the RPV, and returning this now-treated water via the feedwater line. The reactor water is cooled to 49°C by flowing through the tube side of the series configuration RHX and the tube side of the parallel configuration NRHX, before entering the RWCU/SDCS pump suction. The pump discharges the process flow to the demineralizer for the removal of impurities and returns the process flow to the RPV through the

shell side of the RHX, where it is reheated to approximately 227°C , and then into a flow-mixer nozzle within the feedwater line.

During reactor startup, a percentage of the flow - generally, less than 25% - from the demineralizers can be directed to the main condenser hotwell or the liquid radwaste system for the removal of thermally expanded reactor water and reactor inflow from the Control Rod Drive System (CRDS). For RPV hydrotesting and startup, a steam-to-water heater in each train can be used to heat the reactor water if decay heat is not available or if the decay heatup rate would be too slow.

Following a period of plant power generation operation, the normal shutdown cooling function for the Nuclear Steam Supply System (NSSS) is performed by the RWCU/SDCS, assisted initially by pressure letdown through turbine steam bypass valves to the main condenser. With a shutdown cooling design maximum flow rate of 162 kg/sec per train, the RWCU/SDCS shutdown cooling function has a total heat removal capacity of 37.4 MWt with both trains operating. In conjunction with the heat removal capacity of the main condenser and/or the isolation condensers, the system can reduce the reactor pressure and temperature from the rated design pressure and temperature of 7.17 MPa and 282°C to 100 kPa and 60°C in 24 hours. The system can continue to cool the reactor to 54°C in 40 hours after control rod insertion. It can reduce the reactor temperature to 49°C at the completion of reactor well flooding from sources with a temperature at or below 35°C . The system is capable of meeting the heat removal rate required to achieve this cooldown performance assuming all components required for shutdown cooling are operable, and the Reactor Component Cooling Water System (RCCWS) water temperature is no greater than 30°C .

3.5.2 Design Bases

3.5.2.1 Safety Design Bases

The RWCU/SDCS does not perform any safety-related functions. Therefore, the RWCU/SDCS has no safety design bases other than for safety-related containment penetrations and isolation valves.

3.5.2.2 Plant Investment Protection Design Bases

The RWCU/SDC System is designed to:

- Remove solid and dissolved impurities from the reactor coolant and measure the reactor water conductivity during all modes of reactor operation;
- Discharge excess reactor water during startup, shutdown, and hot standby conditions and during refueling to the main condenser or to the radwaste system;
- Minimize RPV temperature gradients by enhancing circulation through the bottom head region of the RPV to reduce thermal stratification at low power;
- Provide heating of primary coolant for RPV hydrostatic tests and reactor startup; and

- Provide approximately 200% of normal cleanup capacity to enable rapid restoration of reactor coolant quality (specifically, water clarity) in the event of crud bursts during reactor shutdown prior to a scheduled refueling outage.

In addition, the shutdown cooling mode of the RWCU/SDC System is required to:

- Remove decay heat during normal plant shutdowns;
- Remove the core decay heat, plus overboard the control rod drive flow after approximately eight hours following control rod insertion, assuming either the main condenser or Isolation Condenser System (ICS) is available for initial cooldown; and
- With loss of preferred off-site AC power, bring the plant to its cold shutdown state, a condition where the RPV bulk coolant temperature is at or below 100°C , in 36 hours in conjunction with the ICS, assuming the most restrictive single active failure.

3.5.3 Configuration and Special Features

Each train (intake, return piping, and coolant processing equipment) of the RWCU/SDCS performs the two functions of reactor water cleanup and shutdown cooling with a common piping system. The RWCU/SDCS is constructed of stainless steel, except for the non-regenerative heat exchanger shell, which is carbon steel. The supply (intake) side of the RWCU/SDCS is designed for 110% of the RPV design pressure. Downstream of the pumps, the design pressure for piping and equipment is increased by the pump shutoff head at 5% overspeed.

During reactor startup, a portion of the flow leaving the demineralizers can be directed to the main condenser hotwell or to the liquid radwaste system low conductivity tank. This allows removal of excess reactor water volume created by thermal expansion during heatup and by RPV inflow from the CRDS. For RPV hydrotesting and startup, a startup heater is provided in each train to heat the reactor water if decay heat is not available or the heatup rate from decay heat would be too slow.

The SDC mode of the RWCU/SDCS provides some core decay heat removal capability at normal reactor operating pressure and provides, with the use of both loops, full core decay heat removal capability beyond approximately eight hours (post-scram) and at other times when the reactor coolant temperatures have been reduced substantially from the normal operating temperature. The limitation experienced in the immediate post-scram (from 100% power operation) period is a consequence of a limitation of the RCCWS hot leg (outflow) from the NRHX, which is not permitted to attain temperatures which would inordinately raise RCCWS design pressure. At eight hours post-scram, core decay heat levels are much reduced and, with reductions in reactor coolant temperature having taken place via ICS and/or main condenser heat rejections, the hot leg temperature in the RCCWS can be kept below limiting values, and full core decay heat removal can be provided by the SDC mode. The redundant RWCU/SDCS component trains permit shutdown cooling (with an extended cooldown time) with one train out of service.

The RWCU/SDCS is automatically connected to non-safety-related standby AC power (diesel-generators or combustion gas turbines), allowing it to perform its reactor cooling functions when the preferred power source is not available. In the event of loss of preferred power, the RWCU/SDCS, in conjunction with the isolation condensers, is capable of bringing the RPV to the cold shutdown condition of 100°C in 36 hours, assuming the most limiting single active failure.

The RWCU/SDCS includes the following major components:

- demineralizers,
- pumps,
- non-regenerative heat exchangers,
- regenerative heat exchangers,
- startup heaters, and
- valves and piping.

Demineralizers

The RWCU/SDCS demineralizers feature a low-pressure-drop, radial-flow, mixed-bed design. Design data for these stainless steel shell and internals demineralizers are listed in Table 3.5-1. A bypass line with a throttle control valve permits each demineralizer unit to be bypassed when the cleanup function is not required. Resin breakthrough to the reactor is prevented by a strainer in the demineralizer outlet line to catch the particulates from any resin beads that may have disintegrated. Non-regeneration type resin beads are used, minimizing the potential for damaged beads passing through the strainer to the reactor. The demineralizer is protected from high differential pressures via an automatically controlled bypass valve. The demineralizer is similarly protected from overtemperature by automatic controls that first open the demineralizer bypass valve and then close the demineralizer inlet valve.

When it is necessary to replace the resin, the demineralizer tank is isolated from the rest of the system and the resin is sluiced in water to a backwash receiving tank, which is located lower than the demineralizers. To fill the demineralizer, fresh resin is added as a slurry. When sufficient resin has been added, the demineralizer is filled with water, vented, and returned to service. This entire operational sequence of closing and opening valves, discharging exhausted resin, recharging with new resin beads, and realigning valves to return the demineralizer to service is done under automatic control. The expected run times under continuous service for freshly charged units on ESBWR range from a minimum of four weeks to a best-estimate recharge interval of eight months. At convenient intervals for the plant operations staff, collected resins and liquid in the backwash receiving tank are piped to the radwaste building.

Pumps

The RWCU/SDCS pumps overcome system piping and equipment flow losses and feedwater line operating backpressure and return the treated water to the reactor through the feedwater lines. Pump design data is listed in Table 3.5-2. The required system flow during the shutdown cooling mode of operation is much higher than the required flow during the cleanup mode of operation. A single pump operating in both of these modes would be very inefficient, therefore the RWCU/SDCS has a two pump per train design. The higher capacity pump is a wet stator unit glandless motor type and is used during shutdown cooling operation. The lower capacity pump is a dry stator unit glandless motor type and is used during cleanup operations. Drain lines to radwaste are provided to facilitate pump maintenance. A continuous motor cavity purge flow, taken from the CRDS, is provided to each pump motor. Motor cavity coolant is circulated by a shaft-mounted impeller in the motor section to an integral liquid-to-liquid heat exchanger for rejection of windings losses and rotor and bearing friction losses. Cooling water for the motor heat exchanger is provided by the RCCWS. Pumps are protected from damage by foreign objects during initial startup by temporary startup suction strainers. To ensure pumps do not operate against a completely closed discharge, a low-flow bypass line is provided around each pumps' discharge control valve.

Non-Regenerative Heat Exchanger

Design data for the NRHXs are listed in Table 3.5-3. Each NRHX cools the reactor water by transferring heat to the RCCWS coolant. The temperature of the reactor coolant leaving the NRHX is restricted to less than 60°C when the NSSS is being operated in the shutdown, startup, hot standby, isolation event, or overboarding (i.e., dumping water to the main condenser or to the radwaste system) modes. Thermal relief valves are provided on the tube side of the NRHX. A shell-side relief valve is also provided. The shell-side relief valve is sized to permit a tube leakage equivalent to 10% of the tube-side flow and to relieve shell side pressure in the event the shell-side (cooling water) valves are closed and the tube-side flow continues.

Regenerative Heat Exchanger

Design data for the RHXs are also listed in Table 3.5-3. Each RHX is used to recover sensible heat in the reactor water, reduce the recycle heat loss, and avoid excessive thermal stresses and thermal cycles on the feedwater piping. Thermal relief valves are provided on both the shell and tube sides of the RHX.

Piping

RWCU/SDCS piping from the RPV to the outboard containment isolation valves forms part of the Reactor Coolant Pressure Boundary (RCPB) and is Quality Group A, ASME Section III, Class 1 and Seismic Category I. Downstream of the outboard containment isolation valves, the piping is Quality Group C, ASME Section III, Class 3, and nonseismic. At the connection point to the feedwater line, the RWCU/SDCS return line has a thermal sleeve and flow-mixer sparger to preclude excessive and/or life-shortening thermal stresses caused by the temperature difference between the two fluid streams. The RWCU/SDCS return line from the isolation valve, up to and including the connection to the feedwater line, is Quality Group B, ASME

Section III, Class 2, and Seismic Category I. The supply side of the RWCU/SDCS is designed for 110% of the RCPB design pressure. Downstream of the pumps, the pump shutoff head at 5% overspeed is added to the supply side design pressure.

Startup heaters

External heating for the reactor water is provided if decay heat is either unavailable or too low to control the reactor temperature rise rate during startup or to warm the RPV for hydrotest. A steam-to-water heater is installed in the return line, downstream of the RHX, in each RWCU/SDCS train. These startup heaters are supplied steam from the station auxiliary boiler. The startup heaters are rated at 8 MWt. Without assist from any decay heat and with the RPV filled, the NSSS heatup rate when both trains are operating is approximately 4.4°C/hr.

3.5.4 System Operation

The modes of operation of the RWCU/SDCS are described below:

Power Operation

Those portions of the system required for reactor water cleanup are designed for a flow rate of 21.6 kg/sec . During normal power operation, water is drawn from the reactor vessel through one of the twin RWCU/SDCS loops - the other loop being in standby - and is cooled while passing through the tube side of the RHX and NRHX. The water is then pumped through the demineralizer. It returns through the RHX shell side, where it is reheated, and enters the reactor vessel through the feedwater lines.

Startup

During NSSS drain and fill operations, the RWCU/SDCS is isolated and stands depressurized. During draining, the high point vents and low point drains are manually opened. During filling, the low point drains are manually closed and the system is filled with water. Individual high point vents are manually opened to remove entrapped air. During heatup, the RWCU/SDCS raises the RPV temperature to 80°C using the startup heaters.

The RWCU/SDCS provides a combined (two-loop) flow of 172 m^3/hr through the four RPV bottom head connections during heatup, cooldown, and startup operations to prevent thermal stratification at the bottom of the RPV. During reactor startup, the RWCU/SDCS removes the excess reactor water volume arising from injection of CRD purge flow and thermal expansion of the RPV water. This operation maintains the reactor level until steam can be sent to the main turbine condenser. After warmup to approximately 54°C , the RPV pressure is brought to saturation by opening the vessel to the main condenser via the turbine bypass valves to promote deaeration of the reactor water. Because this deaeration process is carried out with the RPV at subatmospheric pressures, the RWCU/SDCS flow rate is lowered to 60.3 m^3/hr to prevent cavitation in the piping system and in the pump suction. This (NSSS warmup) operating condition represents the most severe Net Positive Suction Head (NPSH) challenge to the RWCU/SDCS pump design, and accounts for the system layout that places these pumps on the basemat, the lowest practical elevation inside the RB.

Overboarding

During hot standby and startup, water entering the reactor vessel from the CRD System or water level increase due to thermal expansion during plant heatup may be dumped ("overboarded") to the main condenser to maintain reactor water level. Overboarding of reactor water is accomplished with one system train while the other train continues to perform the reactor water cleanup function. The train in the overboarding mode uses a combination of pump flow and pressure control to maintain the reactor water level. The pressure control station, located downstream of the demineralizer, consists of a pressure control valve, a high pressure restriction orifice, an orifice bypass valve, and a main condenser isolation valve. Reactor water level is maintained by controlling the pump speed and the pressure control valve position in response to flow, level, and pressure control signals. In fact, for part of the heatup process, the coolant volumetric increases from the combined effects of CRDS flow injection and coolant thermal expansion exceed the volumetric removal capability of the system. This necessitates establishing a low RPV water level prior to beginning this heatup. Even as coolant is being removed, the expansion gradually produces an increase in RPV water level. This process ends with RPV water level being just above the Level-3 setpoint, prior to the Level-3 scram trip logic becoming active. During the early phases of startup, when the reactor pressure is low, the restriction orifice is bypassed. The restriction orifice bypass valve will automatically close when the pressure upstream reaches a predetermined set point to ensure the pressure drop across the pressure control valve and the orifice bypass valve are maintained within their design limits.

During overboarding, the RHX is bypassed and the NRHX is in service to cool the reactor water to approximately 49°C . The cooling minimizes two-phase flow in the pressure reducing components and downstream piping. The demineralizer is also in service to ensure the water overboarded to the condenser meets specified water quality requirements. In the event that high radiation is detected downstream of the demineralizer, the overboarding flow is manually shifted to the Liquid Waste Management System (LWMS). The shift is accomplished by first opening the remote manual isolation valve to the radwaste system and then closing the remote manual isolation valve to the main condenser.

The system piping routed to the main condenser and LWMS is designed with sufficient wall thickness to ensure that the stresses are within the stress limits even if these pipe runs are subjected to full reactor pressure. This precludes the possibility of a break in the piping outside the reactor building as a result of improper operation of the system. In addition, the low-pressure portion of the system is protected by the automatic closure of the pressure control valve upon detection of high downstream pressure. The system piping routed to the LWMS is also protected from overpressurization by a pressure relief valve that relieves to the piping routed to the main condenser.

Normal Plant Shutdown

The operation of the RWCU/SDCS at high reactor pressure reduces the plant reliance on the main condenser or ICS. The entire cooldown is controlled automatically. As cooldown proceeds and reactor temperatures are reduced, pump speeds are increased and bypass valves are opened. During the early phase of shutdown, the RWCU/SDCS pumps operate at reduced speed to control the cooldown rate to less than 56°C/hr . To maintain a 56°C/hr cooldown rate, both RWCU/SDCS trains are placed into operation early in the cooldown, with the pumps and system configuration aligned to provide a total system flowrate of approximately 213 t/h . The total system flow rate is gradually increased to approximately 1166 t/h . To accomplish this, the bypass lines around the RHX, and the demineralizer are opened. At an appropriate time, the 12-inch motor-operated RCCWS inlet valve to the NRHX opens, supplementing the 6-inch RCCWS inlet valve, and increasing the cooling water flow to each NRHX.

The automatic reactor temperature control function controls the cooldown by gradually increasing the speed of the system pumps up to the maximum pump flow. Water purification operation on the split-stream that is directed through the demineralizer is continued without interruption. Over the final part of the cooldown, to ultimately reach 49°C , maximum flow will be developed through the RWCU/SDCS pumps. CRDS flow is maintained to provide makeup water for the reactor coolant volume contraction that occurs as the reactor is cooled. The RWCU/SDCS overboarding line is used for fine level control of the RPV water level as needed.

At a later time, when decay heat loads are significantly lower, the flow rate can be reduced while maintaining reactor coolant temperatures within target temperature ranges.

Hot Standby

During hot standby, the reactor is in a shutdown condition at rated pressure. The RWCU/SDCS may be used as required, in conjunction with the main condenser or isolation condensers, to maintain a nearly constant reactor temperature. This operation processes reactor coolant from the bottom head and the mid-vessel region of the RPV, transfers the decay heat to the RCCWS, and returns the purified water to the RPV via the feedwater lines by operating both RWCU/SDCS trains. The pumps and instrumentation required to maintain the hot standby condition can be connected to the standby AC power supply during loss of preferred power.

Refueling

The RWCU/SDCS can be used to supplement the Fuel and Auxiliary Pools Cooling System (FAPCS) spent fuel heat removal capacity during refueling. It can also provide (A-train only) supplemental cooling of the reactor well water when the RPV head has been removed for refueling operations.

Operation Following Transients

In conjunction with the isolation condensers, the system has the capability of removing the core decay heat, and overboarding excess makeup from CRD purge flow, starting at approximately four hours from control rod insertion. If the shutdown was caused by an isolation

event (which always brings the ICS into operation when the reactor is in the RUN mode), and assuming the most restrictive single active failure, one or all isolation condensers can be valved-out by the operator in order to provide easier pressure and water level regulation with the RWCU/SDCS.

3.5.5 Safety Evaluation

The RWCU/SDCS is classified as a non-safety-related system except for its RCPB and containment isolation functions. During power generation operations, the 250A-size containment isolation valve is closed and the 100A-size isolation valve is open. This limits the maximum rate of coolant loss into the RB in the event of a hypothetical high-energy line break. The RWCU/SDCS piping runs pass through equipment rooms and/or pipe chases within the RB. The pressure retaining capability of these equipment rooms and pipe chases is in excess of the highest transient pressures that can result from the worst-case postulated pipe break. Process steam/coolant released from the piping into these equipment rooms and pipe chases is routed into the steam tunnel where the pressure is safely relieved. Both outboard containment isolation valves are designed for rapid closure to limit the amount of coolant release. The break itself will be rapidly detected and isolated by the sensors and embedded logic of the Leak Detection and Isolation System (LD&IS).

3.5.6 Testing and Inspection Requirements

During preoperational testing, system component operability, flow rates, heat removal capacities and controls and interlocks are tested to demonstrate that the RWCU/SDCS meets design requirements. The functional capabilities of the containment isolation valves can be tested in-place in accordance with the inservice inspection requirements. All leak test connections can be isolated by two valves in series.

3.5.7 Instrumentation Requirements

Measurements of RWCU/SDCS flow rate, pressure, temperature, and conductivity entering and leaving the demineralizer are indicated in the main control room (MCR) where suitable alarms are provided. Valves behind shielding are furnished with on/off air operators, individually controlled from a local panel or with extension stems that penetrate the shielding. During the shutdown cooling mode of the RWCU/SDCS, the core inlet temperatures measured by thermocouples at positions physically outside the RPV in the pipe runs of the RPV bottom drain lines are used to control system flow. Instruments monitoring the temperature of the RCCWS water leaving the NRHX also automatically control the RWCU/SDCS flow. The pump speed is adjusted when the RCCWS outlet temperature from the NRHX rises to 60°C .

The following specific instrumentation functions are provided:

<u>Flow Measurement</u>

The combined system process flow from the bottom drain line and the RPV mid-region nozzle suction line is measured. The flows will range from 14 t/hr to 590 t/hr . The flow

measurement instrument has a split range with separate pressure taps for low and high flow conditions.

Pump Controls

Each pump is manually operated from the MCR by a switch with status indicator. The pumps are protected from potential cavitation during operation in the shutdown cooling mode by a speed runback. The runback is actuated if the RPV water level falls to Level 3. A low-pump-flow interlock stops the pump automatically.

Isolation Valves

Motor-operated isolation valves are both automatically and manually actuated. Automatic closure overrides a manual opening signal. The following signals prevent the containment isolation valves from opening or close them if they are open:

- Leak Detection and Isolation System (LD&IS) signals
- Initiation of the Standby Liquid Control System (SLCS)
- High temperature in main steamline tunnel
- Low reactor water level (Level 2) and
- High RWCU/SDCS flow.

SLCS actuation (boron injection) prevents the inboard and outboard isolation valves from opening, or closes them if they are open. This isolation prevents the boron from being removed from the reactor water by the RWCU/SDCS demineralizers.

NRHX High Temperature

Reactor water temperature at the NRHX tubeside outlet is indicated in the MCR. A high-temperature signal closes the outboard valve.

System Flow Valves

Each system flow control valve is manually operable from the MCR with indication of position status.

Overboard Flow Control Valves

The valve position of overboard flow control valves is set from the MCR with a remote manual controller. The control circuits cause the valve to fail closed. High and low overboard pressures automatically close the overboard flow control valve and actuate an annunciator.

Temperature Monitoring

The temperature of the water returning to the RPV is indicated by a temperature element on the return lines, upstream of their junction with the feedwater line. Demineralizer inlet temperature indication and alarms are provided in the MCR to protect the demineralizer resins from high temperature. High temperature activates the alarm, automatically isolates the demineralizer, and opens the demineralizer bypass.

Conductivity Instrumentation and Sampling Points

The conductivity of the demineralizer inlet and outlet process streams is continuously measured and transmitted to recorders in the MCR. Conductivity in excess of water quality requirements causes an alarm. Sampling probes are located in the inlet header and in each outlet line of the two demineralizer units. Sample lines from each probe are routed to the sample station.

Table 3.5-1 RWCU/SDCS Demineralizer Design Data

Type	Radial flow; mixed bed
Number required (per train)	One
Capacity (% of FW system flow each)	1%
Flow rate per unit (t/hr)	77.4
Design temperature (°C)	66
Design pressure (kPa)	10342
Flow per unit area (t/hr/m^2)	27.0
Differential pressure (kPa)	
• Clean	207
• Annunciate	234
• Resin replacement	241

Table 3.5-2

RWCU/SDCS Pumps Design Data

	Cleanup Operation	**Shutdown Cooling**
Type	Dry Stator Unit Glandless Motor	Wet Stator Unit Glandless Motor
Drive type	AC Motor	AC Motor
Number required	2 (1 per train)	2 (1 per train)
Motor power, each (kW)	45	212
Capacity per Train (Normal Operation)	100%	50%
System Flow (per train)	77.4 t/hr (1% of FW Flow)	583.2 t/hr (7.5% of FW Flow)
Pump developed head (m)	159	100
Design temperature (°C)	66	66
Design pressure (kPa)	9860	9860

Table 3.5-3
RWCU/SDCS Heat Exchanger Design and Performance Data

	Regenerative (RWCU mode)	**Nonregenerative (RWCU mode)**	**Nonregenerative (SDC mode)**
Number required for mode	1 (1 per train)	1 (1 per train)	2 (1 per train)
Capacity (% of FW flow)	1%	1%	7.5% per train
Shell design pressure (kPa)	10342	718	718
Shell design temperature (°C)	302	85 (	85
Tube design pressure (kPa)	8618	8618	8618
Tube design temperature (°C)	302	302	302
Type	Vertical U-tube	Vertical U-tube	Vertical U-tube
Exchange capacity per train (MW)	16.4	9.6	18.7
Code of construction	ASME Section III, Class 3 TEMA R	ASME Section III, Class 3 TEMA R	ASME Section III, Class 3 TEMA R

3.6 Fuel and Auxiliary Pools Cooling System

3.6.1 Description and Functioning of System

The Fuel and Auxiliary Pools Cooling System (FAPCS) is comprised of two, very simple, safety-related coolant refill piping subsystems and a non-safety related main network of active piping and equipment components that circulate, cool, clean, and redistribute coolant from and to each one of the pools within the Reactor Building (RB) and well as the pools in the auxiliary fuel building.

The goals for a simplified nuclear power plant have been balanced with the goals for the lowest-reasonable-cost nuclear power plant over many tens of engineering man-years of deliberation during the design of SBWR and in the nearly ten-year design effort on ESBWR to arrive at the particular selection of system configuration and features described in this Section.

The safety-related functions of the FAPCS, its most important but least utilized functions, are:

- At the end of the 72-hour period following a loss-of-coolant accident (post-LOCA period), convey water using one exclusive, completely passive-type, safety-related piping network (i.e., no active valves having to change position) that includes grade-level connection points outside the RB with pipe runs from there into the IC/PCC pool; and
- At the end of the 72-hour post-LOCA period, convey water using another exclusive, completely passive-type, safety-related piping network that also features grade-level connection points outside the auxiliary fuel building with pipe runs from there into the spent fuel storage pool.

For its non-safety related functions, the FAPCS cools, cleans and distributes water to each one of the pools within the reactor building and auxiliary fuel building.

The FAPCS is also used to drain the reactor well to permit removal and replacement of the drywell head and the Reactor Pressure Vessel (RPV) head during outages, and to refill the reactor well to support refueling and, ultimately, power generation operations.

Additionally, the FAPCS, using one of ESBWR's two main feedwater lines, can inject suppression pool coolant into the RPV during a loss-of-coolant accident (LOCA) after the reactor has been depressurized down to approximately 5 bar . This enables the FAPCS to provide a low-pressure coolant injection (LPCI) function, as well as to provide, through connection with opened safety-relief valves, an alternate back-up means of shutdown cooling.

Key FAPCS components and design features are shown in the accompanying "ESBWR - Fuel and Auxiliary Pools Cooling System - Schematic Diagram" found in Appendix A.

The principal non-safety modes for FAPCS operation are below, with more detail presented later in this Section:

Refueling/Storage Pools Cooling and Cleanup Mode A primary function of the FAPCS is to provide the interconnected set of pools that are open at the working level of the auxiliary fuel building, with cooling and cleanup operations. These pools include:

- spent fuel storage pool;
- cask loading and transfer pool and
- inclined fuel transfer system lower pool

Each of these pools is equipped with surface skimmers which draw off warm surface water and drain it to one or both of a pair of large-capacity skimmer surge tanks with approximately two minutes' worth of normal process flow rate in each. The outlet lines from the skimmer surge tank bottoms are at a relatively high elevation in the auxiliary fuel building and the RB and they run downward to the lowest floor in the auxiliary fuel building where the FAPCS pumps are located. There the suction line connects to the inlet end of the dual-train of cooling/cleanup equipment. Following water treatment that involves filtering and demineralization, the purified water is returned to these pools via a piping distribution system featuring discharges located deep in the respective pools.

In addition to the pools in the auxiliary fuel building, the FAPCS is also responsible for the cooling and cleanup of the pool in the reactor building, which consists of the following:

- the buffer pool;
- the spent-fuel transfer pool;
- the steam dryer and separator storage pool; and
- the reactor well.

IC/PCC Pool Cooling and Cleanup Mode The FAPCS also services the semi-closed IC/PCC pool with pool cooling and water purification functions. IC/PCC pool water is drawn off via four suction intakes located at the respective end-regions of the large interconnected IC/PCC pool. The intakes are positioned at an elevation above the Plant Technical Specification minimum water level for normal plant operation. These four lines all join to form a common line leading to the upstream end of the cooling/cleanup trains. The water is cooled and cleaned by one of the cooling/cleanup trains and is returned to the pool through a common line, branching into four smaller lines prior to submerged discharges deep within the pools.

GDCS Pool Cooling and Cleanup Mode For cooling and cleanup purposes, the GDCS pools are series-cascaded through lines which draw water from one pool and discharge it at a submerged location in an adjacent GDCS pool. The water is drawn at an elevation above the minimum water level for normal plant operation. The main FAPCS suction line for this FAPCS mode takes water from the last GDCS pool in the cascade, thereby causing a small imbalance in pool level which creates the driving force for transfer of water from the adjacent pool and so on through the cascade. This main suction line penetrates the containment boundary and merges

downstream of the outboard containment isolation valve with the line leading from the IC/PCC pool to the inlet end of the cooling/cleanup trains. Processed water from the outlet of the cooling/cleanup trains is returned to the head pool in the GDCS pool. This again creates a small imbalance in pool level at the head pool end which causes water to flow into and through the remaining GDCS pools through the interconnections described above.

Suppression Pool Cooling and Cleanup Mode Cooling and cleanup of the suppression pool is performed by drawing pool water through a line which penetrates the inner pool wall (the wall containing the main vents) at approximately 2.0 m below normal pool level and enters the annular region of the upper drywell. Inside the suppression pool, this suction line has two suction intakes, each outfitted with strainers, one intake located deep in the pool, the other located in the very top layer of the pool. This configuration ensures that at the condition of greatest pool drawdown during an accident, when the upper intake (but not the horizontal outlet pipe) may become partially uncovered, the intake pipeline itself will not become air-filled (risking a cut-off of suction flow) because flow will continue to be drawn out via the deep intake. In the condition where the top intake is covered, the FAPCS can draw both from the potentially hot stratified surface layer and from the cooler water standing in the lower depths of the suppression pool.

Having exited the inner pool wall, this suction line turns downward, passes through part of the reactor support steel structure, and then turns outward on a horizontal run to penetrate the containment boundary beneath the suppression pool. It traverses the region beneath the suppression pool, passes through the containment support wall and joins the cooling/cleanup inlet lines from the GDCS pool and the IC/PCC pool to reach the inlet of the cooling/cleanup trains. From the outlet of the cooling/cleanup trains, the processed water flows through the same line as was used for return of GDCS pool water until this return line branches into a separate line, outside the containment, to penetrate the containment. Inside the containment this return line joins into the 250 drain line leading from the reactor well to a common discharge point near the bottom of the suppression pool.

Low Pressure Coolant Injection (LPCI) Mode Under accident conditions, once the reactor has been depressurized to a pressure that is below the nominal shutoff discharge head from the FAPCS pumps, logical processing enables the opening of various valves that automatically align the FAPCS to draw coolant from the suppression pool and pump this coolant into RWCU/SDCS piping that leads into one of the two main feedwater lines, thus achieving a low-pressure coolant injection. If RCCWS cooling is operational and serving the FAPCS heat exchangers, this LPCI flow will then be cooled as it flows through the heat exchangers. Downstream of the heat exchangers, bypass valves open to bypass the water purification components in this mode of FAPCS operation, thus avoiding the pressure drop that would result and thus gaining a small increase in total LPCI flow rate.

Pool Transfer and Inventory Makeup Mode In addition to the FAPCS's cooling/cleanup function/services to pools in the auxiliary fuel building and RB, a number of lines included in the FAPCS provide for transfer and makeup of pool waters, as needed. In addition, the FAPCS provides connections from the plant's Fire Protection System (FPS), that allow use of the FPS's

diesel-engine driven pumps to provide, as an emergency condition, low pressure coolant injection to the RPV and to various pools if needed.

Clean, demineralized water from the Makeup Water System (MWS) can be supplied to the IC/PCC pool through one of the cooling/cleanup discharge lines to maintain pool level. Clean, demineralized water for maintaining the level in the fuel and auxiliary pools is supplied to one of the skimmer surge tanks from the Condensate Storage and Transfer System (CS&TS). The CS&TS can also supply makeup water for level maintenance to the GDCS pools and suppression pool through their cooling/cleanup discharge lines.

Reactor Well Drain/Refill Mode The reactor well is drained through a line which delivers pool inventory into the suppression pool. The suppression pool serves as a large capacity holding tank, and when reactor well refilling is required, the FAPCS draws coolant from this pool, pumping it back into the reactor well.

3.6.2 Design Bases

3.6.2.1 Safety Design Bases

- An independent connection shall be provided to supply emergency makeup water to the IC/PCC pool. This connection shall be located at grade level in the reactor yard external to the RB. The piping shall be sized on the basis of a 100 t/h pool makeup rate. No active valves located inside the RB shall be required to operate to accomplish this makeup. The external water supply shall be furnished and powered by non-FAPCS services.
- An independent connection shall be provided to supply emergency makeup water to the spent fuel storage pools. This connection shall be located at grade level in the reactor yard external to the auxiliary fuel building. The piping shall be sized on the basis of a 23 t/h (14 lb/s) spent fuel storage pool makeup rate. No active valves located inside the auxiliary fuel building shall be required to operate to accomplish this makeup. The external water supply shall be furnished and powered by non-FAPCS services.
- FAPCS piping and components, relied upon for containment integrity, shall be designed to Seismic Category I, the ASME Code, Section III, Class 2, and Quality Group B requirements.
- FAPCS piping and components providing emergency makeup to the IC/PCC and spent fuel storage pools shall be designed to ASME Code Section III, Class 3, and Quality Group C requirements.
- Safety-related portions of the FAPCS shall be protected from flooding, spraying, steam impingement, pipe whip, jet forces, missiles, fire, and the effect of failure of any non-seismic Category I equipment.
- Safety-related functions shall be accomplished in the event of failure of off-site power.
- Safety-related actions shall be provided by equipment of sufficient redundancy and independence such that a single active failure will not prevent the safety-related function.

- Pool suction and discharge piping shall be arranged and constructed such that an active failure of any FAPCS component will not impair the safety-related functions of the spent fuel storage, IC/PCC, GDCS and suppression pools.

3.6.2.2 Plant Investment Protection Design Bases

- The FAPCS shall have the capability to draw water from the suppression pool and inject it into the RPV for inventory replacement.
- The FAPCS shall have the capability to cool the suppression pool water by circulating it through a heat exchanger.

3.6.3 Configuration and Special Features

The FAPCS's cooling and cleaning functions are performed by two trains (i.e., series of components), each consisting of a pump, heat exchanger, and water treatment (filter and demineralizer) unit. These component trains are connected at each end by a bridge of four motor-operated gate valves. These valve bridges allow the plant operator to align the component trains to perform various system functions in the most efficient manner. Each valve bridge also includes four manually-operated block valves, enabling on-line maintenance operations on the motor-operated valves comprising the valve bridges. The system pressure drop can be lowered by bypassing the water treatment units when the cleanup function is not required.

The first component downstream of the four-valve bridge in each cooling/cleanup train is a horizontal-axis 480-VAC motor driven pump with an adjustable speed drive. Suction inlet and discharge outlet sizes are 200 A and 150 A, respectively. The pump is designed to deliver 115 liters/sec and will be capable of operating at a maximum runout flow of 140 liters/sec without pump or system instability. The pump will be capable of starting with a closed discharge valve and of operating at rated speed within 30 seconds following receipt of a pump start signal. The pump will be equipped with a line to drain leakage from the shaft seal. This line will permit measurement and visual inspection of any leakage. The pump will be capable of operating with an inlet water temperature of 100°C In establishing the location of the pumps, consideration will be given to the assurance of adequate NPSH during all plant operation and shutdown conditions.

Downstream of the backflow-preventing check valve located at the discharge from each FAPCS pump is a shell-and-tube heat exchanger. These FAPCS heat exchangers each feature three shells. Cooling water is provided to the heat exchanger by the Reactor Component Cooling Water System (RCCWS). The FAPCS process flow outlet from the heat exchanger is piped to the inlet of a water treatment unit (featuring a hollow-fiber type filter unit followed by a deep-bed type demineralizer) through a motor-operated gate valve. A bypass line with a motor-operated gate valve is provided for optional bypass of the cleaning unit. The cooled and cleaned water is returned to the pools through piping, which provides exhausts near the pool bottoms.

Each water treatment unit consists of a deep-bed, mixed-resin demineralizer located downstream of one or more parallel-linked hollow-fiber type prefilters. The filter material consists of rayon polyethylene fibers and flow through the fibers is from outside to inside. The pore size guarantees an absolute resolution less than 0.5 μm and an effluent quality below 0.1 ppb. Each prefilter unit is capable of managing a flow rate of 40 t/h with a maximum allowable

differential pressure of 3.4 bar, including piping. Backwashing and scrubbing of the prefilter units can be carried out with pressurized air. The demineralizer contains 8 m^3 of Amberlite IRN-150L mixed resin with a bed height of 1.45 m and has a minimum of 90 days operation time. Sizing of the demineralizer vessel is based on backwashing of the resin bed once a month.

During normal plant operation, the water temperature and quality in the pools serviced by the FAPCS will be maintained within specified limits and, where appropriate, at a clarity suitable for refueling. The FAPCS will supply makeup water, as necessary, to maintain the pool levels. The FAPCS will be capable, during normal operation, of providing two changeovers per day of the water volumes of the largest pool.

During normal operation, the skimmer surge tanks provide either makeup, or surge capacity, for the temporary imbalances in water caused by on-going operations and transfers. For example, water for filling the cask pool and storage capacity for cask pool swell water will be provided by running down the level in the skimmer surge tanks. Storage capacity will also be provided for IC/PCC pool water swell following an isolation event, without the plant's needing to use either the suppression pool, the main condenser or the Liquid Waste System (LWS) to accommodate the overflow. The FAPCS's normal functions, including the cooling, cleaning, and transfer of makeup water to the fuel and auxiliary pools, are non-safety related.

The FAPCS removes decay energy from the spent fuel storage pool to keep its temperature within specified limits for normal operation and for the emergency condition of a single active failure. The design-basis normal maximum heat load for the spent-fuel pool is the decay heat associated with an accumulation of ten calendar years of UO_2 spent fuel, with a batch of spent fuel having just been placed in the pool during refueling at 96 hours after shutdown. The design basis abnormal maximum heat load for the spent fuel pool is the normal heat load plus the decay heat from a full core off-load at 96 hours after shutdown. The heat load for the spent fuel pool is determined using the decay heat correlations in ANS/ANSI-5.1-1979.

Clarity and purity of the water in the pools maintained by the FAPCS is accomplished by a combination of filtering and ion exchange. The water treatment unit is comprised of a hollow-fiber filter, followed by a deep-bed demineralizer. Each water treatment unit can maintain the desired purity level of the pools under normal operating conditions. The design flow rate is approximately that required for two complete water changes per day. The water treatment units remove the following types of suspended or dissolved impurities:

- dust and other airborne particles;
- surface dirt dislodged from equipment in the pool;
- crud and fission products from the reactor or fuel bundles;
- debris from inspection or disposal operations; and
- particles from residual cleaning by chemicals or flush water.

The filter-holding element can withstand a differential pressure greater than the developed pump head for the system. A strainer in the outlet stream of the filter/demineralizer units prevents the migration of filter material. The filter/demineralizer units are located in separate

shielded rooms with enough clearance to permit removal of the filter elements. Each room contains only the filter-demineralizer and its adjacent piping. All valves, headers, instrumentation, and controls are located on the outside of one wall of the room. Penetrations through the shielding walls are designed so as not to compromise radiation shielding requirements.

The FAPCS is used for draining the reactor well to the suppression pool. Inside the containment, beneath the reactor well, the drain line contains two locked-closed, manual, gate isolation valves (to meet containment isolation regulations) in series. Downstream of the second isolation valve, a drain line from the bulkhead at the bottom of the cavity between the RPV head and the drywell head, containing one locked-closed, manual, gate valve, joins the drain line from the reactor well. (Note that this latter pipeline segment is totally within the drywell during reactor operation, and thus does not require doubled valves.) The reactor well and the RPV bulkhead water can be drained to the suppression pool by opening the manual gate valves.

On a loss of off-site power (LOOP) condition, the on-site standby non-safety power source will automatically start, and the FAPCS will automatically accomplish all necessary transfers and loading sequences to resume FAPCS operations--together with all the auxiliary loads needed to service the circulation and cooling functions--to regain system operation in the mode in which it was operating prior to the LOOP event. The electrical power supply for the FAPCS is separated to the maximum practical extent to assure high system availability. On a complete loss of FAPCS active cooling capability, with normal or abnormal maximum heat load, the spent fuel pool will have a sufficient quantity of water above the top of stored spent fuel assemblies to allow pool heatup followed by boiling, for a combined total 24 hour duration, and still maintain at least 1.0 m (3 ft) submergence of any active fuel rod segment.

The FAPCS components and piping are capable of replenishing inventory lost from the spent fuel pool by boiloff with the residual pool inventory saturated. This assures that active cooling capability can be restored by raising the pool level to the elevation of the suction line inlets. The FAPCS arrangement permits restoration of active cooling with a pure-steam environment above the working floor of the auxiliary fuel building and the increased dose rates associated with reduced fuel submergence. This is accomplished by control of pump and valve operation from the main control room (MCR).

The FAPCS will have the capability (non-safety related) to perform the following function:

- Using suppression pool water, provide low pressure coolant injection (LPCI) into the RPV using RWCU/SDCS and feedwater system piping. The LPCI mode may be manually initiated once the reactor has depressurized below 0.69 MPa-gauge. A minimum flow rate of 230 t/h shall be achievable once the reactor has depressurized below 0.38 MPa-gauge .

The LPCI-mode line branches from the cooling/cleanup return line which services the IC/PCC, GDCS and suppression pools. The LPCI-mode line injects water from the outlet of the FAPCS cooling/cleanup trains into the RWCU/SDCS Train A line. The Train A RWCU/SDCS line connects with feedwater line A to the RPV. The LPCI-mode line contains an air-operated injection gate valve and an air-operated check valve, which serve as pressure isolation valves.

The pressure isolation valves can be leak-tested and their valve position is displayed in the MCR. The air-operated injection valve is controlled by a reactor pressure interlock. The valve is prevented from opening if the reactor pressure is above a setpoint which is less than the upstream piping design pressure. The upstream piping design pressure is specified such that the piping ultimate rupture strength pressure is higher than the reactor coolant system pressure.

Two air-operated isolation valves are located in the section of the FAPCS suction line from the suppression pool which penetrates the containment and runs beneath the suppression pool bottom slab. Both isolation valves are located outside the containment. This "isolation valves both outside containment" configuration is chosen to avoid requiring the otherwise inboard isolation valve to have to operate (i.e., to open, after being closed for several days) following an extended period of submergence in the hot post-LOCA lower drywell pool that forms in the course of a design basis LOCA. The containment piping penetration for this line as well as the line segment itself are both upgraded in design strength and ruggedness to exempt these components from postulation of a line break between the containment boundary and the outermost isolation valve.

Each of the return lines from the cooling/cleanup trains has an overflow connection to the LWS. These lines serve to discharge any excess pool water developed during various phases of system operation.

The walls and floors of the pools served by the FAPCS are clad with a leaktight stainless steel lining. The lining is constructed by welding stainless steel sheets to beams which are anchored in the reinforced concrete walls of the pools. A pool liner leak detection system is expected to be provided for some or all of these pools.

The FAPCS includes two emergency safety-related lines (denoted as post-LOCA fill-up connections in the schematic diagram) for refilling the spent fuel storage pool and the IC/PCC pool from a water source outside of the respective building. Each fill-up line has a manual gate valve with a blind flange at its inlet end outside the respective building. The valves are located about 0.9 m above grade level to permit connection to temporary emergency water supplies. Each fill-up line is equipped with a swing-check valve inside the building, but there are no active valves that must function to successfully accomplish this safety-related mission.

3.6.4 System Operation

The FAPCS operates continuously to cool, clean, and maintain the clarity of the fuel storage pool in the auxiliary fuel building. It can be used to periodically cool and clean other pools in the RB as identified in prior paragraphs. Additional FAPCS functions include makeup water transfer, reactor well fill and drain, and alternate shutdown cooling. Operation of the FAPCS is remotely monitored and controlled from the MCR. The water treatment units are controlled from a local panel which transmits the status of the units to the MCR. Selection of the system operating mode and the cooling/cleanup train configuration is accomplished by initiation of automated logic sequences. These automated sequences control the starting and stopping of pumps and the alignment of valves. These automated sequences include certain line-purging operations, with purge flow draining to the LWS, when the switchover from one mode to another holds prospect of radioactive coolant mixing with basically zero-radioactivity-content pool

waters. System status is displayed for the operator during these automated sequences and capability is provided to override the automated sequence with manual control.

The following paragraphs describe operational features of various system operating modes:

Cooling/Cleanup Modes During normal plant operation, the FAPCS can operate in the following modes for cooling and cleanup of the spent fuel storage pool and one or more of the auxiliary pools that drain to the skimmer surge tanks:

- single train;
- dual train;
- single pump with two heat exchangers and two filter demineralizers

The reactor well is excluded from cooling and cleanup when it is being filled or drained. With normal, or less than normal, decay heat load, the system operates with a single cooling/cleanup train to cool and clean the spent fuel storage pool. An exception to this operating condition exists during or following a seismic event, when the pool water treatment subsystem is bypassed in order to ensure spent fuel pool cooling.

The maximum normal heat load is estimated to be 4.9 MW and the corresponding maximum pool water temperature is 48.9°C The FAPCS has the capability to utilize both heat exchangers for fuel pool cooling while operating with a single pump. This capability can be used when the pool heat load exceeds the normal design heat load for single-train operation. This maximum heat load condition is 16.9 MW with a corresponding maximum pool temperature of 48.9°C . The FAPCS is sized to operate with a single cooling/cleanup train under the limiting condition of a single active failure. Under this condition and with the maximum heat load of 16.9 MW, the maximum pool water temperature will be 69.8°C .

Cooling and cleaning of the IC/PCC, GDCS, and suppression pools is by a dedicated cooling/cleanup train (A or B). For example, if Train A is being used for one or more of these pools, spent fuel pool cooling and cleaning will be via Train B. Each of the IC/PCC, GDCS, and suppression pools has its own cooling mode and cooling of these pools is normally intermittent. The suppression pool cooling mode is automatically initiated when the pool bulk-mean temperature reaches 43°C . The high-temperature signal is sent by the Suppression Pool Temperature Monitoring System (SPTMS) which automatically aligns the FAPCS standby train in the suppression pool cooling mode. The FAPCS is designed to operate either one of the fuel and auxiliary pools cooling and cleanup modes (designated as modes 1A, 1B, 2A, 2B on the FAPCS's Process Flow Diagram) on one cooling/cleanup train in combination with another mode on the other cooling/cleanup train without mixing the two water flows.

Reactor Well Drain and Fill Either Train A or B can be used to fill the reactor well with suppression pool water. The reactor well and the RPV bulkhead are drained to the suppression pool by opening the locked-closed manual valves in these drain lines.

Overboarding of Suppression Pool Water The FAPCS can be used to maintain normal water level in the suppression pool. Periodic removal of excess suppression pool water may be necessary as a consequence of sustained SRV leakage. The FAPCS transfers the excess water to the LWS.

Makeup Water Supply IC/PCC pool makeup water is supplied by the MWS through connections into the line from the discharge end of the cooling/cleanup trains to the IC/PCC pool. The IC/PCC pool makeup water is controlled by opening and closing a motor-operated globe valve, which responds to a signal from the IC/PCC pool level instrumentation. Makeup water to all other auxiliary pools is supplied by the CS&TS via the skimmer surge tank.

Cooling and Cleanup Train Flushing The cooling/cleanup trains are provided with a connection from the MWS for flushing of the cooling/cleanup components. The flushing connection is located upstream of the inlet valve bridge on the IC/PCC pool suction line. Coolant used for flushing is overboarded to the LWS.

Alternate Shutdown Cooling/ Low Pressure Coolant Injection (LPCI) The FAPCS is designed to provide a backup supply of makeup water to the RPV under an emergency condition where the reactor has been depressurized. The FAPCS LPCI is provided through a connection to the RWCU/SDCS piping and feedwater system piping. The LPCI mode can be activated when the RPV pressure is below 0.69 MPa-gauge .

By using a return path through the SRVs in the Nuclear Boiler System, the FAPCS can provide backup shutdown cooling when the reactor has been depressurized.

Emergency Water Supply Emergency water supply to the spent fuel storage and IC/PCC pools can be provided through dedicated lines from an external water source (e.g., fire pump) located outside the RB. Control of the water flow is by means of a voice communication link between the MCR operator and the operator of the external water source.

3.6.5 Safety Evaluation

The FAPCS is a non-safety related system except for supply of emergency makeup water to the spent fuel and IC/PCC pools. For containment isolation purposes, the portions of the FAPCS which penetrate the containment are also considered to be safety-related. The considerations described in the following paragraphs lead to the conclusion that the FAPCS meets its design basis requirements.

The emergency-makeup supply functions use piping which is independent of the equipment and piping used for the non-safety functions of the FAPCS.

Suction and discharge piping, from and to the pools serviced by the FAPCS, is constructed and arranged such that a failure of an active or passive FAPCS component cannot compromise the safety functions of the containment or the spent fuel storage, IC/PCC, GDCS, and suppression pools. The following FAPCS design features have been incorporated to meet this requirement:

- anti-siphoning holes in submerged piping;
- routing of the suction and discharge piping for the GDCS pools above pool water level;
- routing of the suction and discharge piping for the IC/PCC pool above pool water level; and
- containment isolation valves.

A makeup water system and spent fuel pool water level instrumentation ensure replacement of evaporative and leakage losses. During normal operation, makeup water will be supplied from the condensate storage tank. The suppression pool is an alternate source of makeup water. On a LOOP event, the on-site standby non-safety power source will automatically start in readiness to assume the electrical load. The electric power supplies for the components in the cooling/cleanup trains are separated to assure high system availability.

On a complete loss of FAPCS active cooling capability under the condition of maximum normal or abnormal heat loads (an extremely unlikely event), a sufficient quantity of water will be available in the spent fuel storage pool and the pools in communication with it to allow heatup followed by boiling for a combined total 24 hours without operator action and still have the top of the fuel at least 1.0 m submerged. This minimum submergence will provide sufficient shielding to maintain the shine radiation at acceptably low levels while ensuring that the fuel remains covered so that there will be no heatup of the clad. After 24 hours, the safety-related emergency makeup water piping will convey makeup water from outside sources until the active cooling capability is restored.

The FAPCS components and piping are capable of replenishing inventory lost from the spent fuel pool by boiloff with the residual pool inventory saturated. This assures that active cooling capability can be restored by raising the pool level to the elevation of the suction line inlets. The FAPCS arrangement permits restoration of active cooling with a pure-steam environment above the working level of the auxiliary fuel building and the increased dose rates associated with reduced fuel submergence. This is accomplished by control of pump and valve operation from the MCR.

The spent fuel storage pool is designed such that no single failure of structures or equipment can limit its ability to:

- maintain the submergence of the irradiated fuel;
- reestablish normal fuel pool water level; or
- remove decay heat from the pool.

The pool is lined with stainless steel to effectively eliminate the possibility of leakage. The liner is also designed to prevent damage to the pool structure from the movement of equipment. Interconnected drainage paths are built into the concrete behind the liner to prevent the uncontrolled loss of pool water and to limit pressure buildup behind the liner. The drainage paths allow gravity flow to the equipment drain sumps and are designed such that the pool generating the leakage can be identified. The pool has no inlets, outlets, or drains which could allow it to be drained below a safe shielding level. Piping within the pool that extends below the

safe shielding level is equipped with siphon breakers, check valves, or other suitable devices to prevent inadvertent pool drainage.

Maximum spent fuel pool bulk water temperatures have been calculated and evaluated for acceptability as described below:

Normal plant operation; normal maximum spent fuel pool heat load The maximum spent fuel pool bulk water temperature for normal plant operation, including refueling, with normal maximum spent fuel pool heat load is 50°C During refueling, with the transfer gates between the reactor well and the fuel pool open, it is possible, on a transient basis, for local fuel-pool temperatures to exceed 50°C. This condition could result from upward and lateral mixing of water at the bulk reactor coolant temperature.

Normal plant operation; normal maximum spent fuel pool heat load; single active failure The maximum spent fuel pool bulk water temperature for normal plant operation, including refueling, with normal maximum spent fuel pool heat load, and a single active failure in the FAPCS, is 60.0°C . This extreme condition, which might last for a few days, is acceptable because the concrete design code (ACI-349) for nuclear safety-related structures limits the maximum continuous concrete temperature to 65.5°C .

Normal plant operation; abnormal maximum spent fuel pool heat load The maximum spent fuel pool bulk water temperature for normal plant operation with abnormal maximum spent fuel pool heat load is 50°C . This condition is associated with a full-core off-load at the point of maximum fuel pool capacity, in combination with maximum RCCWS water temperature. It can be regarded as a highly infrequent event. A 50°C bulk pool water temperature, in combination with the fuel pool area air conditioning system, will provide an acceptable working environment.

Normal plant operation; abnormal maximum spent fuel pool heat load; single active failure The maximum spent fuel pool bulk water temperature for normal plant operation with abnormal maximum spent fuel pool heat load, and a single active failure in the FAPCS, is 70°C This condition is associated with a full-core off-load at the point of maximum fuel pool capacity, in combination with maximum RCCWS water temperature and a single active failure. It can be regarded as a highly infrequent event. This temperature is acceptable for short periods of time on the basis of concrete structural limitations prescribed in ACI-349.

3.6.6 Testing and Inspection Requirements

The FAPCS process piping will be hydrostatically tested during station pre-op testing using available valves or temporary plugs at tank connections. The testing will be performed at 1.5 times design pressure or a minimum of 0.52 MPa-gauge . It is required that the test pressure be held for a minimum of 30 minutes with no indication of leakage. Pneumatic testing may be substituted for hydrostatic testing in accordance with applicable codes.

FAPCS operability will be verified by a combination of system instrumentation, system alarms, and periodic In-Service Inspection (ISI) performed in accordance with applicable codes. The ISI shall include containment penetrations and system components. During system

operation involving only one cooling/cleanup train, the second train can be operated periodically to confirm the integrity and capability of both trains.

3.6.7 Instrumentation Requirements

FAPCS instrumentation provides information on operating mode, pool water levels, and pool temperatures.

Water Flow and Pressure There are local panel-mounted pressure transmitters on the upstream side of the pumps and between the downstream side of the pumps and the pump discharge check valves. The pressure transmitters send signals to pressure indicators in the MCR. An orifice type flow element is located on the downstream side of each pump discharge check valve. A local panel-mounted flow transmitter sends the signals from these transmitters to flow indicators in the MCR.

Water Levels The skimmer surge tank has a local panel-mounted level transmitter which sends a signal to the MCR. In addition to level indication, this signal is used to operate low and high water-level alarms and to operate a valve controlling makeup water supply to the skimmer surge tank.

The IC/PCC pool has two local panel-mounted, safety-related level transmitters. One transmitter sends a safety-related level indication signal to the MCR. This signal is used for low and high, non-safety related, water-level alarms, and for non-safety related level control. The level switch that operates the high/low-level alarm automatically sends a control signal to operate a valve on the makeup water supply line to the IC/PCC pool. The second IC/PCC pool level transmitter sends a redundant safety-related level indication signal to the MCR.

The spent fuel storage pool has two wide-range safety-related level transmitters which transmit signals to the MCR. These signals are used for water level indication and to activate high/low-level alarms.

The suppression pool water level is measured by four wide range safety-related level transmitters. These signals are transmitted via the SPTMS to the MCR. The signals are used for water level indication and to activate non-safety related high/low level alarms.

All other pools have local, non-safety related, panel-mounted level transmitters which provide signals for high/low-level alarms in the MCR.

Water Temperatures The pools serviced by the FAPCS have temperature elements and local panel-mounted temperature transmitters which send signals to the MCR for water temperature indication and high-temperature alarms. In the IC/PCC pool, each condenser vault is so equipped. The upstream and downstream piping of the two heat exchangers in the cooling/cleanup trains have temperature elements and local panel-mounted temperature transmitters which send signals to the MCR.

3.7 Reactor Component Cooling Water System

3.7.1 Description and Functioning of System

The functions of the Reactor Component Cooling Water System (RCCW System) include the following:

- Remove decay and waste heat from systems and equipment in the Reactor Building as required to satisfy the supported systems functions and transfer this heat to the Plant Service Water System (PSWS).
- Provide adequate heat removal capability from the Reactor Water Cleanup/Shutdown Cooling System (RWCU/SDC) heat exchangers after plant shutdown to meet specific temperature and time goals, while simultaneously accepting other required heat loads.
- Provide adequate heat removal capability from Reactor Water Cleanup/Shutdown Cooling System heat exchangers to reach cold shutdown conditions after certain limiting plant conditions, while simultaneously accepting other required heat loads.

Key RCCW components, design features, and basic system parameters are shown in the accompanying "ESBWR Reactor Component Cooling Water System - Schematic Diagram."

The RCCW consists of two 100% capacity independent and redundant trains.

Demineralized water is continuously recirculated through various reactor building heat exchangers and rejects the heat to the Plant Service Water System (PSWS).

In the event of loss of preferred power, the RCCW supports the Fuel and Auxiliary Pool Cooling System (FAPCS) and the RWCU/SDC in bringing the plant to cold shutdown condition in 36 hours assuming the most limiting single active failure.

During normal plant shutdown the RCCW System has adequate heat removal capability to support the RWCU/SDC System to reduce the reactor pressure and temperature from the rated design pressure and temperature of 7.17 MPa and 282ºC to 100 kPa and 60ºC in 24 hours and then continue to cool the reactor to 54ºC in 40 hours. Finally, the systems can reduce the reactor temperature to 49ºC at the completion of reactor well flooding from sources with a temperature at or below 35ºC The RCCW System has adequate cooling capability to support these shutdown cooling requirements while supporting other Reactor Building and Auxiliary Fuel Building cooling needs such as the FAPCS.

Each RCCW train consists of two parallel 50% capacity pumps with suction startup strainers, two 50% capacity RCCW heat exchangers cooled by the PSWS, one head tank, one chemical addition tank, piping and instrumentation. The two trains are connected by cross-tie piping which is normally open during normal operation for flexibility but may be closed for operation and maintenance of either train.

The two pumps in each train discharge through check valves and motor-operated butterfly valves to a common header leading to the shell side of the RCCW heat exchangers. Cross-tie lines to the redundant train are provided up and downstream of the heat exchanger and at the

pump suction headers. The heat exchanger inlet and bypass valves are motor-operated while the cross-tie double isolation valves are manually operated.

Each heat exchanger outlet header distributes cooled water to the following major users:

- Reactor Building Chilled Water System (RBCWS) chiller-condenser tube side
- RCCW air recirculation unit cooler
- Drywell Cooling System (DCS) upper and lower coolers
- RWCU/SDC heat exchanger shell side
- RWCU/SDC air recirculation unit cooler
- FAPCS heat exchanger shell side
- FAPCS air recirculation unit cooler
- Instrument Air System (IAS) compressors, intercoolers, and aftercoolers

The users are provided with manual balancing valves and isolation valves. The major users have motor-operated isolation valves for operator convenience.

The RCCW heat exchangers of a single train are designed for a total of 100% of the heat load in any operational mode, except normal plant cooldown, when the heat exchangers of both trains are required.

The RCCW circulates water through the heat exchangers at higher pressure than the PSWS to prevent intrusion of PSWS water into the RCCW in case of leaks. The conceptual design heat exchangers are horizontal plate-type heat exchangers which are very compact and easily maintained. Pressure and air relief valves are included as required.

The head tank provides a constant pump suction head and allows for thermal expansion of the RCCW inventory. The tank is located a minimum of 0.9m above the highest point in the system. The tank has nitrogen blanketing for corrosion control. Makeup to the RCCW inventory is from the demineralized makeup water system through an automatic level control valve. A backup source of makeup is provided by a manual valve from the Fire Protection System (FPS). The overflow pipe has a loop seal to prevent nitrogen escape.

3.7.2 Design Bases

3.7.2.1 Safety Design Bases

The Reactor Component Cooling Water System (RCCW System) does not perform any safety-related functions, therefore, RCCWS has no safety design bases other than provisions for safety-related containment penetrations and isolation valves.

3.7.2.2 Plant Investment Protection Design Bases

The Reactor Component Cooling Water System is designed to:

- Provide cooling water to reactor auxiliary equipment during normal power, cooldown, and shutdown operations.
- Withstand either a single active or credible single passive component failure without a complete loss of cooling to supported systems and/or plant dependence on any safety-related system.
- Have ease of system restoration after a single component failure without plant operating mode or power level change.
- Operate during a Loss of Preferred Power (LOPP).
- Limit leakage to the environment of radioactive contamination which may enter the system from the higher pressure interfacing systems.
- Seismic Category S criteria where structural failure or interaction could degrade the function of a Seismic Category I structure, equipment, or system, or where appropriate Seismic Category II structure, equipment, or system. System piping and valves forming part of the containment boundary is designed to Seismic Category I.
- Be operated and monitored from the main control room with provisions for operation from the remote shutdown system.
- Bring the plant to a cold shutdown state, i.e. to a condition where the RPV bulk coolant temperature is at or below, 100ºC, in 36 hours in conjunction with the RWCU/SDC and IC Systems, assuming the most restrictive single active failure and LOPP, while simultaneously preventing fuel pool boiling through the FAPCS.

3.7.3 Configuration and Special Features

Each RCCW pump is sized for 50% of the flow requirement of any operational mode except normal plant cooldown, in which case three pumps are required to operate initially. For ease of maintenance, the pumps are horizontal single stage, split case centrifugal types. Normally, the pumps in each train are powered from independent buses. During Loss of Preferred Power (LOPP), the pumps in either train can be powered from separate non-safety-related on-site standby diesel-generators.

The RCCW System is automatically connected to non-safety-related standby AC power (diesel-generators or combustion gas turbines), allowing it to perform its reactor cooling functions when the preferred power source is not available. In the event of loss of preferred power, the RCCW System provides cooling to the RWCU/SDC System allowing it to bringing the RPV to the cold shutdown condition of 100ºC in 36 hours, assuming the most limiting single active failure, and in conjunction with the isolation condensers. During this event the RCCW must simultaneously prevent the fuel pool from boiling through the FAPCS.

A head tank provides a constant pump suction head and allows for thermal expansion of the RCCW inventory. The tank is located a minimum of 0.9m above the highest point in the

system. Makeup to the RCCW inventory is from the demineralized makeup water system through an automatic level control valve. A backup source of makeup is provided by a manual valve from the FPS. The overflow pipe has a loop seal to prevent nitrogen escape.

The RCCW System includes the following major components:

- Pumps and motor drives
- Plate-type heat exchangers
- Head tank
- Valves and piping.

3.7.3.1 Pumps

The RCCW pumps are nominally 50% per train capacity. Pump design data are listed in Table 3.7-1. The pumps are horizontal, motor-driven single stage units. Operation of any two of the four pumps is sufficient for the design heat removal for any modes except the shutdown cooling mode, in which case three of the four pumps are required to operate.

3.7.3.2 Heat Exchangers

There are two horizontal plate-type heat exchangers in each train of the RCCW System. Design data for the RCCW heat exchangers are listed in Table 3.7-2. Horizontal plate-type heat exchangers are selected because they have a very compact size for a given capacity and are easily maintained.

3.7.3.3 Head Tank

The head tank is sized to provide a constant pump suction head and to allow for thermal expansion of the RCCW inventory. The tank has nitrogen blanketing for corrosion control

3.7.3.4 Piping

RCCW System piping, with associated components, forming part of the containment boundary is designed to Quality Group B, ASME Section III, Class 2, and Seismic Category I. All other system piping, with associated components, are designed to Quality Group D, ANSI B31.1, and Seismic Category N.

3.7.4 System Operation

The RCCW operates during startup, normal power, hot standby, normal and extended cooldown, shutdown and LOPP.

During most operating modes, two pumps, and two heat exchangers are operating. One pump is sufficient during normal operation when the plant service water temperature is low enough and the Reactor Water Cleanup/Shutdown Cooling (RWCU/SDC) heat exchanger is operated in the low flow mode.

If any of the redundant users requires cooling in addition to the primary users, additional pumps need to be started.

Bypass valves at the RCCW heat exchangers are provided to maintain the cold leg temperature above 15ºC in winter.

The drywell air cooling function of the RCCW is backed up by the RBCWS through manually operated cross-tie valves.

The modes of operation of the RCCW System are described below.

3.7.4.1 Power Operation

During normal power operation both RCCW trains are operating with cross-ties normally open and with two RCCW pumps operating. Cross-ties may be closed to allow maintenance of either train.

3.7.4.2 Startup

The RCCW System can be filled through the head tank. After venting the pumps are started. During startup, generally two RCCW pumps are operating. If one pump is operating with cross-ties open care is taken not to exceed runout limits on the pump.

3.7.4.3 Normal Plant Shutdown

During normal cooldown to achieve shutdown conditions three out of four pumps are required to operate to achieve design cooldown rates. To maintain cold shutdown two RCCW pumps are required.

3.7.4.4 Hot Standby

During hot standby two RCCW pumps are normally required.

3.7.5 Safety Evaluation

The RCCW System is classified as a non-safety-related system except for its containment isolation functions

3.7.6 Testing and Inspection Requirements

Initial testing of the system includes performance testing of the heat exchangers, cooling coils, and pumps for conformance with design heat loads, water flows, and heat transfer capabilities. An integrity test is performed on the system upon completion.

Provision is made for periodic inspection of major components to ensure the capability and integrity of the system. Local display devices are provided to indicate all vital parameters required in testing and inspections. The pumps are tested in accordance with standards of the Hydraulic Institute. Samples of RCCW may be obtained for chemical and radiological analyses.

3.7.7 Instrumentation Requirements

The RCCW is operated and monitored from the main control room. Major system parameters, such as loop flow rate, heat exchanger outlet temperature, and pressure, are indicated in the main control room. Low pump discharge header pressure, high and low head tank level, excessive makeup valve opening time, and high radiation in the return header are alarmed in the main control room.

Local temperature, pressure, and level indicators provide additional component performance information.

The motor-operated RCCW heat exchanger inlet isolation valve opens automatically upon start of the corresponding loop's PSWS pump. Failure of a RCCWS pump automatically starts the standby pump. Failure of one of the electrical buses automatically starts the standby pump(s) in the unaffected loop.

Table 3.7-1 RCCW System Pump Design Data

Type	Horizontal, split case, centrifugal pump
Drive type	AC motor
Number required	4 (2 per train)
Motor power, each (kW)	255
Capacity (Normal Operation)	375 kg/sec , 50% capacity per pump
Pump developed head (m)	53

Table 3.7-2 RCCW System Heat Exchanger Design and Performance Data

Number	4 (2 in parallel per train)
Type	Horizontal Plate
Exchange capacity per heat exchanger	12.8 MW per unit

3.8 Plant Service Water System

The reference design, described here contains two mechanical draft cooling towers with the maximum heat sink temperature assumed to be 24°C. Turbine building heat loads are extrapolated from SBWR loads. The PSWS will require reevaluation for local site conditions and turbine islands loads when they become available.

3.8.1 Description and Functioning of System

The functions of the Plant Service Water System (PSWS) include the following:

- Remove decay and waste heat from the Reactor Component Cooling Water System (RCCWS) and Turbine Component Cooling Water System (TCCWS) heat exchangers and transfer this heat to the environment by way of plant heat sinks.
- Provide adequate heat removal capability from the Reactor Component Cooling Water System heat exchange equipment after plant shutdown to meet specific temperature and time goals, while simultaneously accepting other required heat loads.
- Provide adequate heat removal capability Reactor Component Cooling Water System heat exchange equipment to reach cold shutdown conditions after certain limiting plant conditions, while simultaneously accepting other required heat loads.

Key PSWS components, design features, and basic system parameters are shown in the accompanying "ESBWR Plant Water System - Schematic Diagram".

The PSWS consists of two independent and 100% redundant open trains which continuously recirculate raw water through the RCCW and TCCW systems' heat exchangers. Heat is rejected to the environment by mechanical draft cooling towers.

In the event of loss of preferred power, the PSWS supports the RCCW in bringing the plant to cold shutdown condition in 36 hours assuming the most limiting single active failure.

During normal plant shutdown the PSWS has adequate heat removal capability to support the RCCW System, via the RWCU/SDC System, to reduce the reactor pressure and temperature from the rated design pressure and temperature of 7.17 MPa and 282ºC to 100 kPa and 60ºC (in 24 hours and then continue to cool the reactor to 54ºC in 40 hours. Finally, the systems can reduce the reactor temperature to 49ºC at the completion of reactor well flooding from sources with a temperature at or below 35ºC . The PSW System has adequate cooling capability to support these shutdown cooling requirements while supporting other plant cooling needs.

3.8.2 Design Bases

3.8.2.1 Safety Design Bases

The Plant Service Water System (PSWS) does not perform any safety-related functions, therefore, PSWS has no safety design bases.

3.8.2.2 Plant Investment Protection Design Bases

The Plant Water System is designed to meet the following requirements.

- The PSWS shall be designed to provide cooling water to the Reactor Component Cooling Water System (RCCW) and Turbine Component Cooling Water System (TCCW) heat exchangers. The PSWS shall provide 24ºC water to the users at 100% capacity.
- The PSWS shall be designed so that neither a single active nor single passive component failure results in a complete loss of nuclear island cooling and/or plant dependence on any safety-related system.
- The PSWS shall be designed for ease of restoration of its function after a component failure without plant operating mode or power level change.
- The PSWS shall be designed to operate during a Loss of Preferred Power (LOPP).
- Seismic Category S criteria where structural failure or interaction could degrade the function of a Seismic Category I structure, equipment, or system, or where appropriate Seismic Category II structure, equipment, or system.
- The PSWS shall be designed for remote operation from the main control room (MCR).
- The PSWS pressure in the RCCW heat exchanger shall normally be lower than that of the RCCW to prevent RCCW contamination by service water in case of leaks.

3.8.3 Configuration and Special Features

PSWS has two parallel trains. Each train consists of two 50% capacity vertical pumps taking suction in parallel from a plant service water basin. Discharge is through a check valve, a self-cleaning duplex strainer and motorized discharge valve at each pump to a common header. The header leads to the tube side of one RCCW and to one TCCW heat exchanger arranged in parallel. The heated water then returns through a common header to the mechanical draft cooling tower in each train. Motor-operated isolation valves and a cross-tie line permit routing of the heated plant service water to either cooling tower. The TCCW heat exchangers are provided with motorized isolation valves for remote operation. Manual balancing valves are provided at each heat exchanger outlet.

The PSWS pumps are located at the plant service water basins. Each pump is sized for 50% of the flow requirement for normal operation. The pumps are low speed, vertical deep-well type with allowance for increase in system friction loss and impeller wear.

Normally, the pumps in each train are powered from redundant electrical buses. During LOPP, the pumps are powered from the two non-safety-related on-site standby diesel-generators.

Valves are provided with hard seats to withstand erosion caused by raw water. The valves are arranged for ease of maintenance, repair, and in-service inspection. During a LOPP, the motor-operated valves are powered from the two non-safety-related on-site standby diesel-generators.

The cooling towers and plant service water basins are located inside the plant security protected area. Each PSWS train is provided with a separate, multi-celled mechanical draft cooling tower having 50% of the cell fans supplied by one of the redundant electrical buses. During LOPP, the fans are powered from the two non-safety-related on-site standby diesel-generators. The adjustable-speed, reversible motor fan units can be controlled for cold weather conditions to prevent freezing in the basin. The mechanical and electrical isolation of the cooling towers allows maintenance, including complete disassembly, during full power operation. Makeup to the basin for blowdown, drift and evaporation losses is from the Station Water System. Suitable provision for anti-fouling treatment of the PSWS will be provided.

Blowdown from the PSWS basins is by gravity into the main cooling tower basin or directly to the plant waste effluent system.

A PSWS drain pump to the PSWS basin is provided in order to drain any RCCW heat exchanger in need of maintenance.

3.8.3.1 Pumps

The PSWS pumps are nominally 50% of train capacity. Pump design data are listed in Table 3.8-1. The pumps are vertical, motor-driven multiple stage, deep-well type units. Operation of any two of the four pumps is sufficient for the design heat removal for any modes except the shutdown cooling mode, in which case three of the four pumps are required to operate.

3.8.3.2 Piping

All PSW System piping, with associated components, are designed to Quality Group D, ANSI B31.1, and Seismic Category N.

3.8.4 System Operation

Operation of any two of the four PSWS pumps is sufficient for the design heat load removal in any operating mode, except the normal cooldown mode, in which case three pumps are required initially.

The manual RCCWS heat exchanger isolation valves on the PSWS and RCCWS sides are always kept open when the heat exchanger is operable.

During LOPP, the pumps that were previously operating restart automatically using power supplied by the non-safety-related standby diesel-generators.

3.8.5 Safety Evaluation

The PSWS is classified as a non-safety-related system and has no safety-related functions.

3.8.6 Testing and Inspection Requirements

Initial testing of the system includes performance testing of the heat exchangers, cooling towers and pumps for conformance with design heat loads, water flows, and heat transfer capabilities. An integrity test is performed on the system upon completion.

Provision is made for periodic inspection of components to ensure the capability and integrity of the system. The pumps are tested in accordance with standards of the Hydraulic Institute. Testing is performed to simulate all normal modes of operation, to the greatest practical extent. Transfer between normal and standby power source is part of these periodic tests.

3.8.7 Instrumentation Requirements

The PSWS is operated and monitored from the main control room. Provision is also made to operate the system from the remote shutdown panels.

When both pumps in a train are operating, a low pressure signal in that train will automatically start both pumps in the redundant train. Motor failure of an operating pump will automatically start the pumps in the redundant train.

Automatically starting one or both pumps in a train will open a flow path to the RCCW side of that train's RCCW heat exchanger.

Loss of electric power to an operating pump will automatically start the second pump in the same train.

The pump discharge strainers have remote manual override features of their automatic basket cleaning cycle. Pressure drop across the strainer is locally indicated and a high value is alarmed in the control room. Venturi type flow elements are used in the return headers to minimize pressure losses. These elements assist in leak detection (0.05 to 0.063 m^3/s;) and are used to monitor PSWS flow locally and in the main control room.

Supply header pressure, and supply and return header temperatures are also indicated in the main control room.

Table 3.8-1 PSWS Pump Design Data

Type	Vertical, multi-stage, deep-well, centrifugal pump
Drive type	AC motor
Number required	4 (2 per train)
Motor power, each (kW)	460
Capacity (Normal Operation)	760 kg/sec 50% capacity per pump
Pump developed head	42.7 m

4. Safety System Design

4.1 Gravity-Driven Cooling System

4.1.1 Description and Functioning of System

The Gravity-Driven Cooling System (GDCS), together with the Auto-Depressurization Subsystem (ADS) of the Nuclear Boiler System, comprise the Emergency Core Cooling System (ECCS) network for the ESBWR. The GDCS will inject large amounts of cooling water into the reactor following any signaled Loss-of-Coolant Accident (LOCA) condition, once the ADS has acted to depressurize the reactor to near-drywell-ambient pressure conditions.

The cooling water source is from the GDCS pools positioned in the upper elevations of the containment. Piping trains that have been assigned, respectively, into four safety-related divisions connect these GDCS pools to the Reactor Pressure Vessel (RPV). The cooling water flows to the RPV through simple passive gravity-based draining of these pools. Once pyrotechnic-type ECCS injection valves have been fired-open, incoming water flows replenish coolant levels in the RPV that earlier had been dropping due to the combined actions of break and ADS steam outflows together with core decay heat-produced steam boiloff.

Within the first few seconds following start of GDCS injection flows following the Design Basis Accident (DBA), the cold GDCS water arrives into the annulus region of the reactor via eight GDCS RPV nozzles. This cold GDCS water quenches the steam-component of the two-phase mixture standing in the lower annulus region and core lower plenum. The design of the vessel volume and ADS setpoint is such that a complete void-collapse of lower-plenum steam voids can be experienced while maintaining at all times a minimum two-phase level covering the active fuel by a minimum design margin equal to 1.0 m.

Shortly after the conclusion of core lower plenum void-collapse, GDCS water inflows exceed both decay heat- produced steam boiloff and depressurization voiding, and so from this moment onward, water levels inside and outside the core shroud begin increasing. The inflows are at such a rate that although warm-up of the GDCS-sourced coolant occurs, bulk steam boiloff no longer occurs. When this condition develops (at a few minutes following initial GDCS coolant injections) steam discharges from the break and from the ADS depressurization valves (DPVs) then stops. For a period of about 30-40 minutes, the drywell will not be receiving steam from the RPV therefore the PCCS (Passive Containment Cooling System) heat exchangers shut down; and GDCS inflows continue to re-build RPV water levels. This process ends when the water level inside the RPV comes into a manometer-type equilibrium with drained-down water level in the GDCS pools. RPV water level will be slightly below the elevations of the RPV nozzles for the ADS stub-lines on which some DPVs are mounted, which elevation is a short distance below the elevation of the main steamline nozzles. Typically, the GDCS pools are about 50% drained-down at this point, 45-60 minutes following the LOCA break.

After some additional minutes, core decay heat--which has been warming-up the GDCS flow injections--will cause steaming out of the RPV again. The PCCS heat exchangers will once again start acting, and condensate from the PCCS heat exchangers will return to the RPV through a set of four RPV PCCS condensate-return nozzles that are independent from any GDCS

RPV nozzles. Coolant will recycle from RPV to drywell to PCCS heat exchangers and then back to RPV in an endless circuit, except for steam condensation that will be occurring on drywell boundaries and internal structures. These small losses will be made up by further inflows from the GDCS pools. GDCS pools, however, will still be partially filled even at the end of 72 hours following a Design Basis Accident.

The GDCS is organized into four divisions, with each division comprised of three sub-divisions. The "short-term injection subsystem" is the piping circuit that has been described above. It brings initial coolant make-up to the RPV immediately following RPV depressurization.

Because there is the prospect of pipe breaks at lower RPV elevations--such as a bottom drainline break--the course of the resulting transient could result ultimately in total draindown of the GDCS pools. Eventually the RPV outflow losses and drywell structure condensation losses could reduce RPV water levels below the Top of Active Fuel -plus- 1.0 m (TAF + 1.0 m) desired safety margin for preventing fuel rod clad heatups. To meet this challenge, a long-term injection subsystem comprised of simple piping and single-time-opening valves is provided in each GDCS division that connects the suppression pool to the RPV via four GDCS RPV nozzles that are at lower elevation on the RPV than the short-term injection subsystem nozzles. Pyrotechnic-type injection valves, selected because of their leak-tightness during power operations and their extraordinarily high reliability to open upon demand, are signaled open by a combination of post-LOCA time delay plus low RPV pressure permissive together with low-RPV level. When these long-term injection lines are opened, water level in the suppression pool, which is a minimum of 2.0 m above TAF, guarantees a passive-type gravity-driven replenishment of RPV coolant in quantities sufficient to maintain the TAF + 1.0 m level margin.

The ESBWR GDCS also deals with the hypothetical severe accident in that it provides a third subsystem in each division to supply GDCS Pool water into the lower plenum when signaled by thermocouples buried just below the surface of the lower drywell floor detecting high temperatures indicative of corium. This "deluge subsystem" is comprised of a set of thermocouples plus piping plus pyrotechnic valves that, when signaled open, passively drain the GDCS pools into the lower part of the upper drywell, which coolant then drains into the lower drywell at rates sufficient to establish and thereafter maintain a water coverage atop the layer of corium, thereby cooling the corium which has spread out across the lower drywell floor, sufficient to prevent elevated temperatures at which corium-concrete reactions could occur.

The operator cannot override or interrupt an ECCS action once it has been sealed-in to the plant's Safety System Logic and Control (SSLC) System. Also, the operator cannot close any valves in the GDCS system. The initiation scheme for the GDCS is designed such that no single failure in the initiation circuitry can prevent the GDCS from providing the core with adequate cooling. Furthermore, the GDCS has no protective interlocks that could interrupt automatic system operation. While all of the detection and signaling functions that cause ECCS operation are automatic and require no operator action or intervention over the 72-hour period following a DBA, the operator can manually initiate any of the three subdivisions in any of the divisions. To initiate the short-term injection and long-term injection systems manually, a low pressure signal

must be present in the RPV, thus preventing inadvertent manual initiation of the system during normal reactor operation.

In-service surveillance testing of certain GDCS mechanical components is possible, as discussed later in this section.

During refueling or maintenance outages, with exposed fuel in the core, each of the GDCS subsystems can be serviced simultaneously in any two safety divisions, while the remaining two divisions stand ready to provide core cooling by automatic as well as by operator-manual activation if RPV water level for any reason drops below the Level-1 trip setpoint.

Topologically, while the GDCS pools are high in the containment, they are nevertheless physically isolated from the drywell. Wetwell/GDCS pool ventpipes extend from the upper parts of the suppression chamber airspace to the airspaces standing atop the water level in the GDCS pools. As the GDCS pools drain down, the draindown volume backfills with noncondensible gases and water vapor then present in the wetwell airspace. This provides important additional volume for noncondensibles to eventually expand into, and so the containment pressure time-history over the 1 hour to 72 hour period of the LOCA is reduced accordingly. The larger benefit from this "GDCS-Pools-in-Wetwell-Airspace" configuration is that during a severe accident, where the GDCS Pool draindown is even more complete (as described earlier), yet more backfill volume is made available for the uptake of severe-accident noncondensibles, nitrogen (as before) but now with potentially large amounts of hydrogen. This reduces the likelihood of the containment overpressure protection (vent) system from actuating and causing a radiological release of krypton and xenon gases from the containment.

The GDCS System is diagrammed on the "ESBWR Gravity-Driven Cooling System -- Schematic Diagram", found in Appendix A. In the discussion that follows, additional features and capabilities are described.

4.1.2 Safety Design Bases

The Gravity-Driven Cooling System is required to:

- Provide emergency core cooling after any event that threatens the reactor coolant inventory following RPV depressurization via the ADS, given a worst-case pipe break together with a worst-case single-failure of any "active" component or logic element.
- Passively inject sufficient water into the depressurized RPV to keep the fuel covered following a LOCA.
- In the event of a severe accident that results in high temperature in the lower drywell floor, the GDCS must flood the lower drywell with the water inventory of all the GDCS pools.
- The GDCS shall be "passive" in its actions, from the standpoint that no external AC electrical power source or operator intervention is required, no motor-operated valves shall be utilized, and injection valves once opened shall remain permanently open and not capable of being re-closed or overridden by operator control actions.

4.1.2.1 GDCS Short-Term Subsystem Requirements:

- The required total RPV injection flow rates, as established by appropriate ECCS analyses, shall be supplied from three separate, non-divisional, GDCS pools via a four-division set of short-term injection piping trains, with one of these three GDCS pools being connected to the RPV via two independent short-term injection piping trains and each of the other two GDCS pools being respectively connected to the RPV via single dedicated remaining short-term injection trains.
- The injection lines shall be electrically independent and mechanically independent and separated in accordance with applicable design rules for separating safety-related divisions.
- The injection lines shall have piping loop-seals (or the equivalent in down-run length) sufficient to prevent drywell gas/steam mixture from reaching the wetwell airspace via backflow through opened GDCS short-term injection lines and accessed via a downstream line break at any position along its high-energy section piping run.
- The drainable water volume in the GDCS pools, collectively, shall be such that the 3 GDCS pools will fill the lower and upper drywell to an elevation at which entrances to spillover-hole piping are positioned to drain into the suppression pool, any water inside the drywell, collecting above this elevation.

4.1.2.2 GDCS Long-Term Subsystem Requirements:

- RPV long-term subsystem injection flow rates shall be supplied from the suppression pool via a four-division set of piping trains and in sufficient quantities to maintain the RPV in-shroud coolant level at a minimum of 1.0 m above TAF, given RPV coolant losses from decay heat boiloff corresponding to approximately one hour after scram and together with outflows from an assumed bottom drainline break anywhere along its run within containment and given a single-failure-to-open of any one of the long-term subsystem injection valves.
- The injection lines shall be electrically independent and mechanically independent and separated in accordance with applicable design rules for separating safety-related divisions.
- These injection lines shall have piping loop-seals (or the equivalent in down-run length) sufficient to prevent drywell gas/steam mixture from reaching the wetwell airspace via backflow through opened GDCS long-term injection lines and accessed via a downstream line break at any position along its high-energy section piping run.

4.1.2.3 GDCS Deluge Subsystem Requirements:

- Deluge subsystem flow rates, as established by appropriate severe-accident analyses, shall be supplied from the GDCS pools to a discharge point in the lower part of the upper drywell region via four divisional piping trains, given a single-failure-to-open of any one of the deluge subsystem injection valves. The deluge subsystem intake can be common

with its respective divisional intake for the short-term subsystem provided that the intake connection is upstream of any normally closed injection valves of the short-term subsystem.

- The injection lines shall be electrically independent and mechanically independent and separated in accordance with applicable design rules for separating safety-related divisions.

4.1.3 Configuration and Special Features:

Referring to the GDCS Schematic Diagram in Appendix A , note the origination of the main GDCS injection piping as down-running into a deep sump that extends several meters below the bottom elevation of the GDCS Pool. The GDCS sump is formed from a 400 mm diameter heavy-walled stainless steel pipe that runs adjacent to, and is structurally supported from, the outer bounding wall of the suppression pool. The 200 mm diameter GDCS injection piping in this region reaches downward to, but maintains an appropriate clearance from, the sump bottom such that inordinate flow entry losses are avoided. The depth and diameter of the sump are selected to ensure that the necessary residual inventory of water to maintain the loop seal intact and functioning is always present throughout the 72-hour post-LOCA period.

Because there is no possibility for LOCA-caused debris from entering the now-isolated GDCS pools, the injection line inlet strainer present on the SBWR GDCS lines has been eliminated; a temporary strainer is provided outboard of the GDCS Pool that is accessible from the drywell side.

Downstream of the strainer along the main run of short-term subsystem piping, injection piping branches into two 150 mm diameter injection runs of piping which terminate at dedicated RPV GDCS nozzles located at an elevation approximately 3.0 m above TAF. Each branch run contains a biased-open tilting-disc check valve and a pyrotechnic (squib)-type injection valve. The squib valve provides absolute leak-tight integrity during power generation operations against any reactor coolant losses or even trace backflows into the GDCS pools (refer to Figure 4.1-1).

The function of the tilting-disc check valve is to prevent high-volume reverse flows in the injection line whether the squib valve either opens accidentally while the reactor is in normal power generation operation or opens properly during a LOCA but where the reactor depressurization has not fully completed, so that a small reverse differential pressure still exists. The leak-tightness specs on these tilting-disc valves are not particularly demanding, as the goal is simply to prevent gross reverse flows, and so it is desirable to avoid imposition of unnecessarily stringent leaktightness limits. The valve is specified to be mounted in a horizontal pipe run so that its disc aligns (by gravity) in a biased-open position. This is done so that if a LOCA occurred and assuming the disc fails to open wide (or to be frozen immobile), a minimum of injection flow will nevertheless still pass through the valve to limit core cladding temperatures from exceeding 816° C--the temperature used to signify whether cladding integrity is lost. The tilting-disc valve and its piping are robust enough to withstand the slamming closure of the disc onto the seat if the squib valve is accidentally fired with the reactor at full pressure and still

remains capable of reopening after the positive differential hydraulic GDCS injection pressures are reestablished. Refer to Figure 4.1-2 for the biased open check valve.

A non-intrusive magnetically coupled torque-motor together with disc position sensors are used on the check valve to test and monitor position. The torque motor and position sensors are completely external to the disc in the tilting-disc valve, and therefore require no axle or electrical penetrations of the pressure casing of the valve. This means no seals and/or packing glands to impair free disc motion. The torque motor and sensors provide the capability for in-service surveillance testing. The valve disc can be pulsed open or closed over full stroke to establish its readiness for functioning under demand conditions. Refer to Figures 4.1-3 and 4.1-4.

The two twin branch runs traverse horizontally to approach the RPV, turning upward to extend a minimum of 0.5 m just before the line bends into the horizontal to connect to the RPV GDCS nozzle. This feature minimizes the horizontal run at the RPV GDCS nozzle and thus minimizes the possibility for continuous circulatory-type movements ("thermal striping") of reactor coolant out of and back into the RPV, these slow flows being driven by small temperature differences between upper (0 degree) and lower (180 degree) ligaments of this piping. This also ensures that the GDCS squib valve will have cold water on both sides of its disc.

A locked-open hand-operated maintenance block valve is located in the branch piping immediately downstream of the squib valve within the traversing horizontal branch run prior to its upward turn(s) connecting to the RPV nozzle.

The inside flow passage of the forged RPV GDCS nozzle has a venturi profile with the diffuser portion being on the downstream (i.e., RPV interior) side. This configuration minimizes the flow losses during GDCS injection, while presenting a flow-limiting effect at the throat of the venturi in the event of a guillotine-type LOCA at the connection of branch run to RPV nozzle. Venturi throat diameter is approximately 75 mm and has a throat length of at least 10 cm such that the homogeneous flow model can be applied in LOCA analyses. Refer to Figure 4.1-3.

A locked-open hand-operated maintenance block valve is also located on the GDCS injection piping run just outboard--i.e., on the drywell side--of the structural wall that separates the GDCS Pool from the drywell. This valve as well as the two partner block valves in the branch runs are fitted with back-seatable stems to facilitate changeout of stem packings.

On this same piping run, before the injection piping branches into two runs, a connection is provided for the deluge subsystem. The deluge main pipe run branches into a header that supplies three pyrotechnic-type squib valves that open when signaled by detection of corium release from the RPV. The intended squib valves for this subsystem would be duplicates, in pressure rating and design, to the familiar squib valves used in the standby liquid control systems of BWR/4s and subsequent BWR product lines.

Totally separate from the short-term injection system and the deluge subsystem, is the long-term subsystem. A piping run (of which there are four, one for each division) brings water from the suppression pool and into a dedicated RPV nozzle. The schematic diagram shows that the features of this subsystem are nearly identical to those of the short-term subsystem. Principal

differences are: (a) the RPV GDCS nozzle is located at an elevation of 1.0 m above TAF; (b) venturi throat diameter is approximately 60 mm; (c) a basket-type strainer is provided at the flow entrance into this piping because of the potential for LOCA-caused debris being blown into the suppression pool; (d) the entrance run incorporates a down-reaching section that, in combination with the standing level in the suppression pool itself, provides the necessary water seal without necessarily being enclosed in a surrounding dedicated sump assembly.

The logic elements that provide controls for the actuation of GDCS squib valves and the batteries that provide power to actuate squib valves are located outside the containment. The squib valves are signaled to open following a specified time delay and after a confirmed low-low water level (RPV Level-1) condition is detected and sealed-in to GDCS logic. Typically, these valves in the short-term injection subsystem open about 150 seconds following receipt of the confirmed RPV Level-1 signal. The valves in the long-term injection subsystem open approximately 30 minutes after receipt of the RPV Level-1 signal, subject to RPV transient water level then being no higher than one meter above TAF.

Attention is paid in the design of the squib valves and tilting-disc valves to ensure that no internal fragments are produced of a size which if transported downstream could, by themselves or collectively, credibly represent a threat of blockage at the RPV GDCS nozzle throats. The squib valves and their pyrotechnic charges are fully qualified for the rigors of LOCA service, including the ability to fire-open upon demand even if the valve has previously been submerged in 149° C (300° F) water for as long as 100 days.

All GDCS components and piping are constructed with nuclear grade stainless steel. The system has a design life of 60 years, except for the pyrotechnic charges which have a service life of four years which has been preceded by a shelf-life residency of up to four years, and for the electrical devices which have a design life of 10 years minimum and for gaskets, seals and lubricants that are designed typically for a six-year service life.

The GDCS pools are interfaced with the Fuel & Auxiliary Pool Cooling System, which periodically removes and then returns cooled, purified water into the GDCS pools. These functions are automatically terminated, of course, in the event of occurrence of low water level conditions inside the RPV.

In ESBWR (different from the SBWR) the GDCS is totally independent from the Passive Containment Cooling System.

Safety-related level instrumentation on the GDCS pools is provided to generate signals used to terminate Control Rod Drive System make-up injections into the RPV. This prevents the ordinarily desirable CRDS injections from, in a LOCA, unnecessarily injecting coolant (once GDCS Pool draining is confirmed), which might eventually raise suppression pool water levels at a point when wetwell airspace volume is desired for holding noncondensible gases.

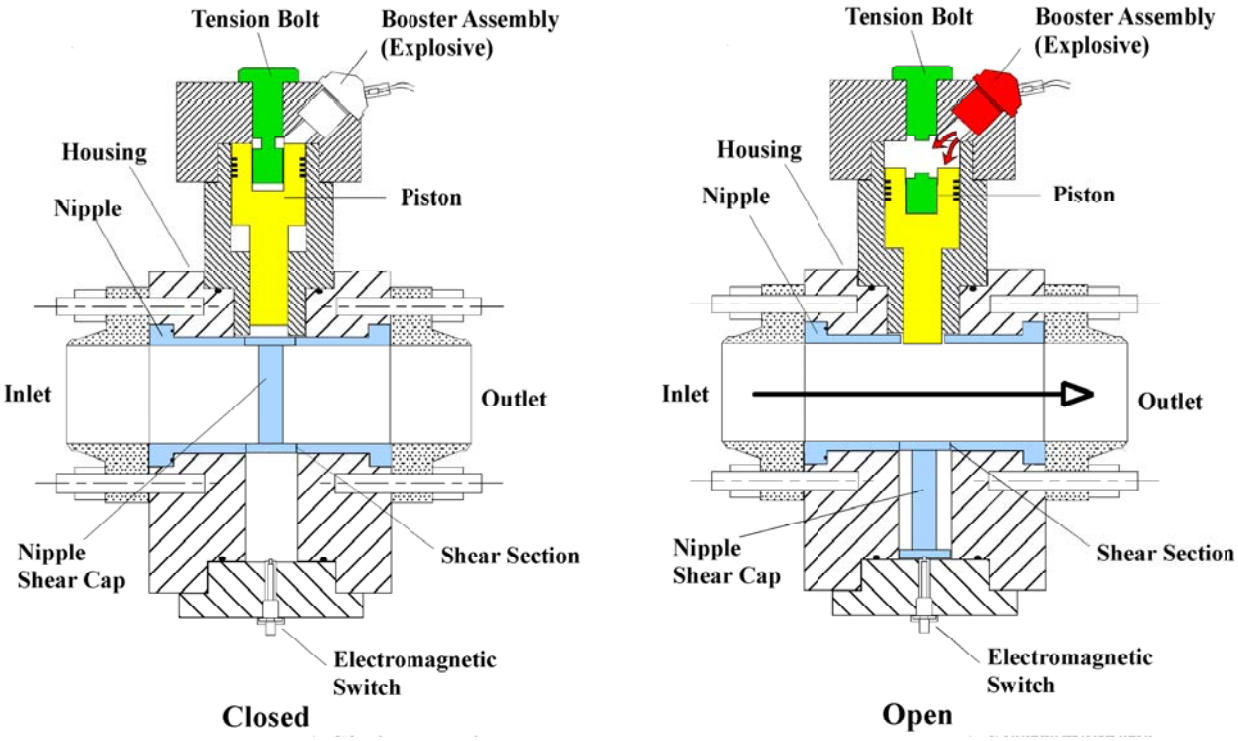

Figure 4.1-1 Typical Squib-Type Explosive Valve for GDCS Injection

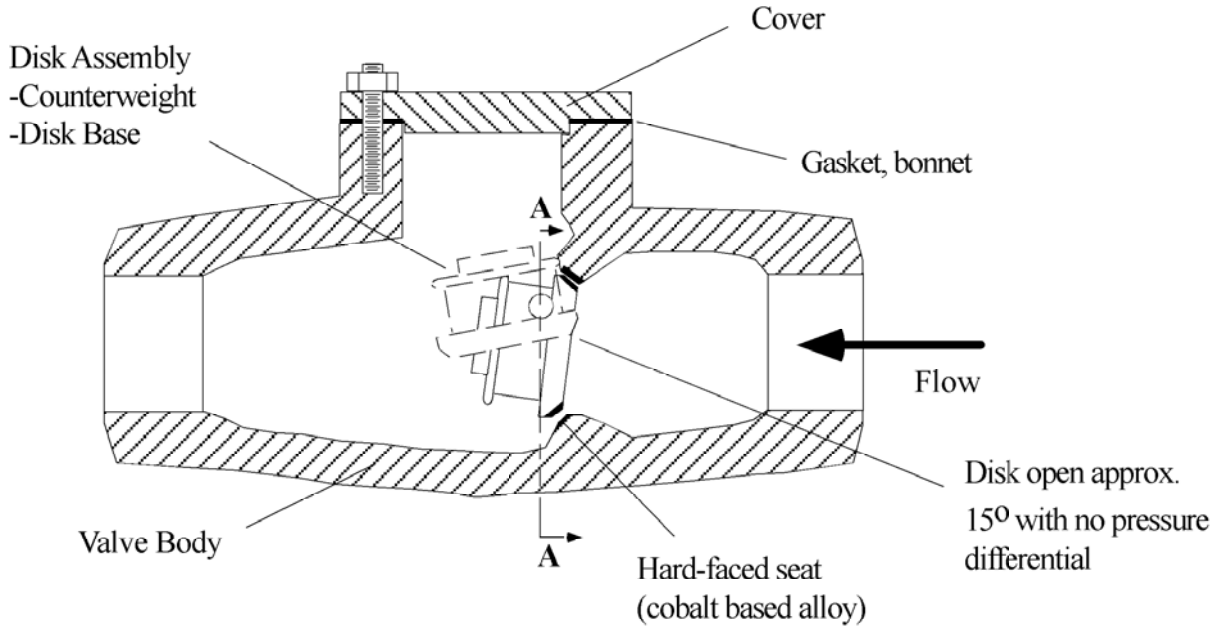

Figure 4.1-2 GDCS Biased Open Check Valve

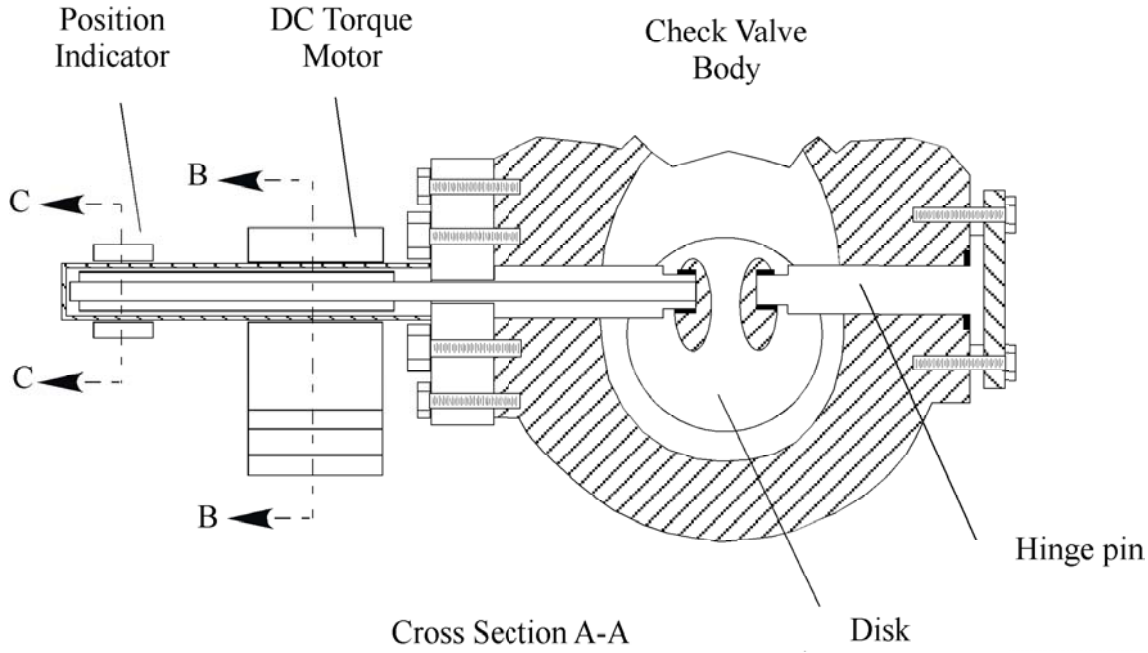

Figure 4.1-3 GDCS Biased Open Check Valve Cross Section A-A

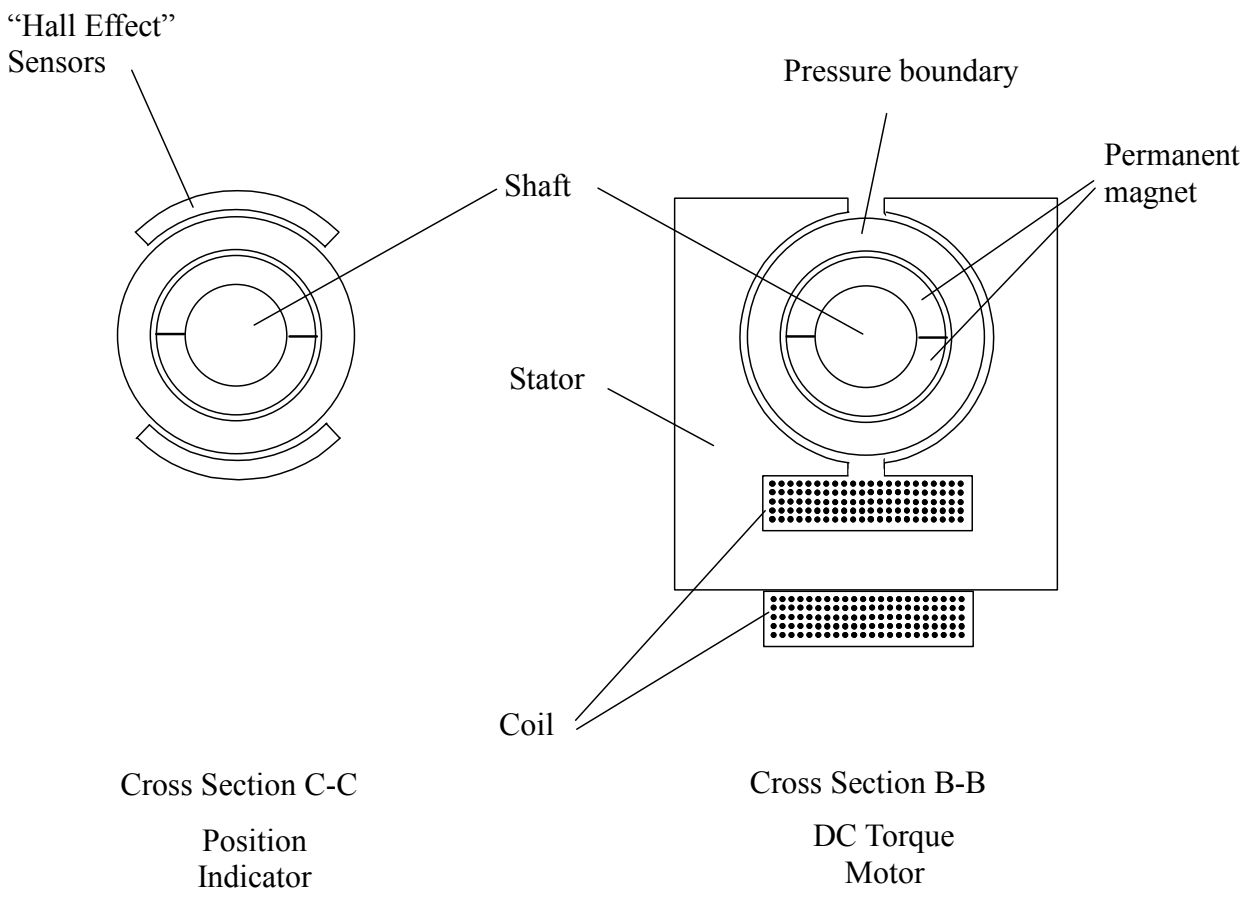

Figure 4.1-4 GDCS Biased Open Check Valve

Cross Sections B-B and C-C

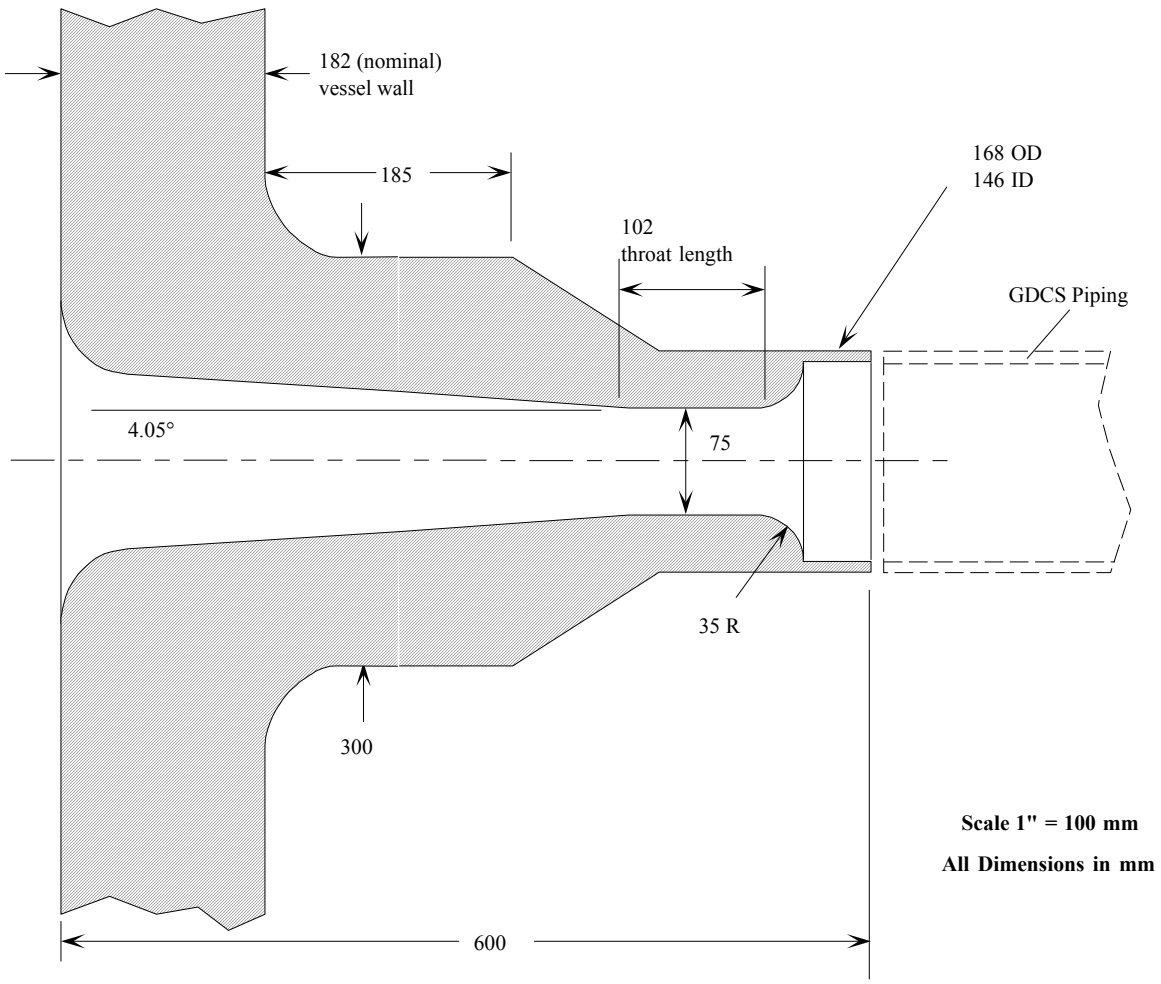

Figure 4.1-5 GDCS - RPV Inlet Nozzle

4.2 Passive Containment Cooling System

4.2.1 Description and Functioning of System

The Passive Containment Cooling System (PCCS System) provides the means following a Loss-of-Coolant Accident (LOCA) by which core decay heat arriving in the containment in the form of steam, is continuously removed. The steam condensing process limits the containment pressure for a minimum of 72 hours to pressure levels below containment design pressure of 310 kPa (gauge) The PCCS System functions by the action of a passively-induced flowing of containment atmosphere through a set of PCC condensers (PCC heat exchangers). These heat exchangers are located within a large pool of water (IC/PCC pool) located immediately outside the containment and they reject heat to this pool by virtue of a relatively small temperature differential. Refer to the "ESBWR Enhanced Passive Containment Cooling System Schematic Diagram" in Appendix A for a general view of the system.

The PCC heat exchangers are two-module (two-bank), drum and tube type heat exchangers using horizontal upper and lower drums connected with a multiplicity of vertical tubes. Two identical modules (banks) are coupled to form one PCC heat exchanger unit. Steam enters the PCC heat exchanger via a central steam inlet line that branches at its top to distribute steam into the twin upper drums. Steam is condensed in the vertical tube section. Condensate drains into the lower drums where it is drained via a condensate drain line that discharges to individual catch-basin-type PCCS heat exchanger condensate drain tanks. Noncondensables that were carried into the PCC heat exchanger along with the LOCA-produced steam from the drywell are exhausted from the lower drums via a noncondensables vent line that discharges below the surface of the suppression pool. Figure 4.2-1 shows the heat exchanger configuration.

A LOCA event drives the PCCS System response in a readily comprehensible manner. Steam discharged from the reactor pressure vessel (RPV) into the drywell tends to pressurize the drywell relative to the wetwell. A pressure differential is thereby created. The higher pressure drywell steam-gas mixture seeks to find the lowest-resistance pathway to restore pressure equilibrium. The only two open pathways for restoring pressure equilibrium each involve a circuit that runs through the suppression pool, (1) the PCC heat exchanger noncondensables vent line, and (2) the DW/WW LOCA vertical vents. Because the exit from PCC heat exchanger noncondensables vent line is submerged less than the exits from the DW/WW LOCA vertical vents, the former pathway becomes favored. Drywell/wetwell differential pressure will be relieved by steam-gas flows into the PCC heat exchanger and then gas outflows down the noncondensables vent line. This outflow depresses the water column that ordinarily exists at the exit of this line to the bottom of the pipe and thereby allowing the noncondensables to exhaust.

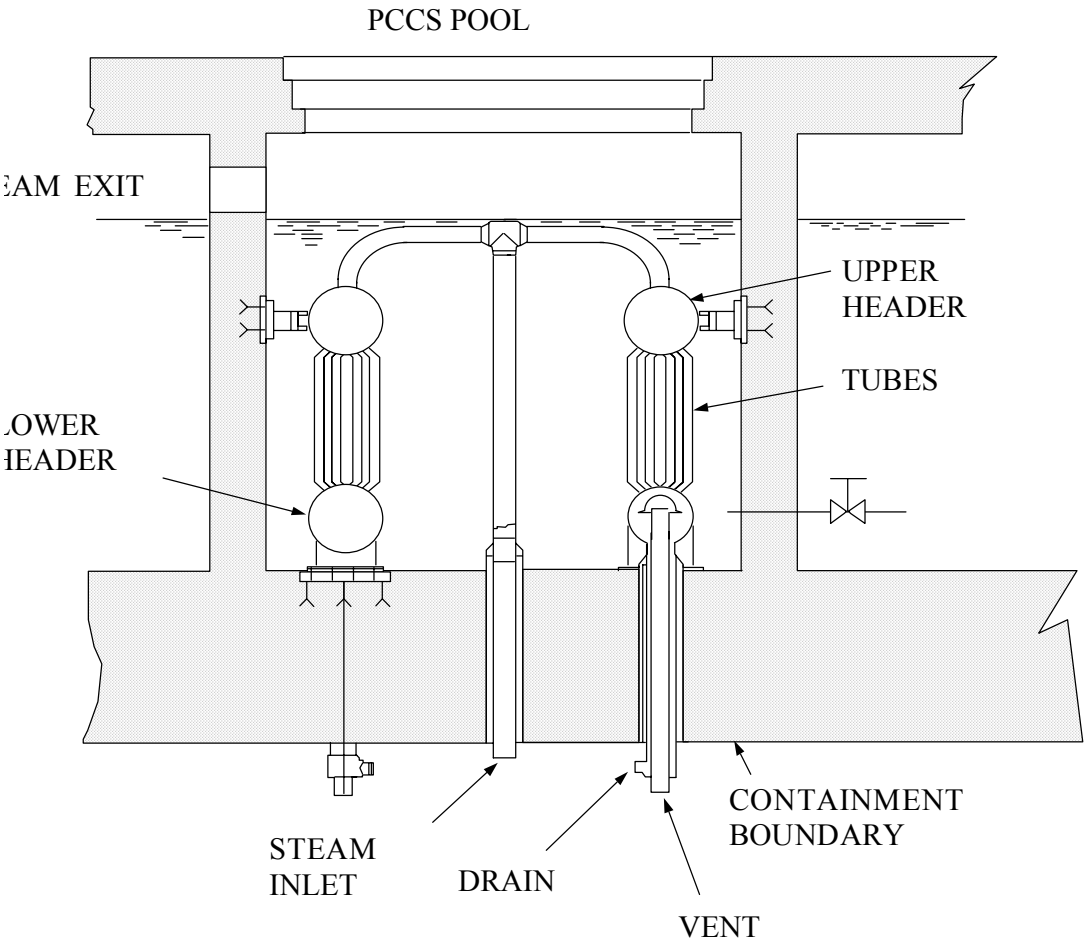

336 tubes/module
Overall length of drum header 3930 mm

Figure 4.2-1 PCCS Heat Exchanger Configuration

The PCCS System self-regulates the heat transfer rate from the containment atmosphere to match the steaming rate produced by core decay heat during design basis accidents (DBAs). The only exception is for an inconsequential few hours at the start of the accident scenario where the PCCS System is temporarily over-challenged.. Containment pressure responds by developing a quasi-steady-state elevated pressure/temperature condition, which thereafter gradually rises over the balance of the 72-hour post-LOCA period as a result of a small amount of (assumed) drywell/wetwell steam bypass leakage. Condensate resulting from the heat transfers within the divisional PCC heat exchangers is piped to respective condensate drain tanks that, in turn, are piped via PCC condensate injection lines to dedicated PCC condensate return nozzles on the RPV.

The condensate drain tanks are sized to capture, without overflowing, the condensate produced by the PCCS heat exchangers during their initial 20 minutes of operation following a LOCA. Some several minutes before this point in a DBA involving a main steamline break, the RPV will have become depressurized sufficiently for GDCS coolant injections to proceed. As mentioned in the accident scenario descriptions of Section 4.1, at this point during the DBA cold GDCS coolant flooding into the RPV causes a cessation of steam production and, for the next 30-40 minutes, little or no new steam will be issuing from the RPV into the drywell. During this period the PCC heat exchangers will not be receiving any steam flow and, accordingly, will not be producing any condensate.

Flow out of the condensate drain tanks and into the RPV is enabled once pyrotechnic-type squib valves ("injection valves") installed in these injection lines are fired-open. These injection valves are signaled to open following a time-delay of approximately 30 minutes after origination and seal-in of LOCA detection sensor outputs to Safety System & Logic Control System (SSLC System) logics that initiate the RPV depressurization.

In the event any squib valve fails to open, condensate accumulating in the associated non-draining condensate drain tank will fill and then overflow onto the diaphragm floor surface of the upper drywell, whereupon this overflow will, in turn, drain to the lower drywell. None of the other PCCS divisions are affected and no ESF equipment is impaired or jeopardized.

Once steaming from the RPV resumes, condensate then flows from the PCC heat exchangers to the condensate drain tanks and then back to the RPV in an endless circuit. This process continues indefinitely. Small inventory losses caused when drywell steam condenses on drywell internal and boundary structures, are made up by compensating drain-down of the water in the GDCS pools, which for this type of DBA have drained to only an approximate 50% empty condition. Thus, considerable amounts of GDCS pool water remain available for makeup.

These latter features of catch-basin-type condensate drain tanks, injection lines and squib valves, and dedicated condensate return nozzles represent an important design improvement that has been added to the PCCS System since the time of SBWR SSAR definition. The benefits that derive from this design modification come in the form of projected reductions to core damage frequency (CDF), quite possibly bringing the resulting value for CDF for internal events below the annual frequency for which a severe accident could be considered any longer credible.

The schematic diagram for the PCCS System is included with this report section, and many of the PCCS System's features will be apparent from a careful study. The PCCS is an engineered safety feature (ESF), and therefore a safety-related system. The PCCS is constructed of stainless steel to design pressure, temperature and environmental conditions that equal or exceed the upper limits of containment system reference severe accident capability. Although this ESBWR PCCS System now includes valves, the ESF process for containment heat removal is totally independent of whether these valves function; only the rate at which GDCS pools are eventually drained-down, and the matter of whether masses of water have pooled in the lower drywell, are changed if one or more of these PCC heat exchanger condensate injection line valves fails to open.

While the PCCS loops each with their in-circuit PCC heat exchanger are separated into four independent safety divisions, the IC/PCC pool itself is segmented into a number of individual compartments which are interconnected by low-elevation pipe runs and openings that penetrate through the lower portions of pool compartment walls. This arrangement ensures that the entire IC/PCC pool water inventory is made available to each and every PCC heat exchanger. As mentioned earlier, at the beginning of the 72-hour post-LOCA event, the PCC heat exchangers are, as a set, in an over-challenged condition and temporarily do not remove quite all the heat from the core produced steam. Excess steam does flow through the PCC heat exchangers and into the suppression pool upper layers. Within a few hours, the PCCS System's heat removal capability comes into an exact balance with core decay heat. Because core decay heat production reduces still further at-later times, soon the set of PCC heat exchangers have even surplus capability to remove core decay heat produced steam. In the latter hours of the 72-hour post-LOCA transient, one or more of the PCC heat exchangers may inherently slow down and finally cease operation, even while their partner PCC heat exchangers may be picking up the heat removal duty that is being re-distributed during this slow-down. By having the IC/PCC pool compartments completely interconnected, IC/PCC pool level reductions will be independent of whichever PCC heat exchangers may happen to be carrying the duty.

The bounding walls to the IC/PCC pool are Safety Class 2 structures and are protected from any damage during aircraft impact or any other design basis loading event by outer walls of the reactor building that are designed to withstand these design basis loadings. The IC/PCC pools are vented to atmosphere; boil off steam formed in the compartments containing PCC heat exchangers is exhausted to atmosphere after first passing through a large face area passive-type steam dryer (for example, chevron-type or variations thereof) while moisture removed by the dryer from this boil off steam is ducted back to the IC/PCC pool.

The ESBWR PCCS also deals with the aerosol products released in a hypothetical severe accident. The drywell atmosphere's steam-gas mixture is circulated several times per hour, typically, through the PCC heat exchangers. Insoluble aerosol products tend to deposit in the upper drums of the PCC heat exchangers while soluble aerosols are scrubbed out of the flowing mixture and retained by the condensate, where they eventually are reinjected into the RPV and/or the pool that forms in the lower drywell. The subsequent partition factors for re-emergence of these products in drywell or wetwell airspaces are very low. This gives a basis for estimating that large radiolytic releases external to the containment have much smaller probabilities than might otherwise be expected.

The drums comprising the PCC heat exchangers have gasketed removable flanges which allow access (once the reactor has been shut down and the drywell has been de-inerted) for such maintenance actions as interior inspections of tube-to-drum welds and for plugging tubes in the event such corrective measures are needed. The IC/PCC compartments in which these heat exchangers are located are accessed through overhead hatches in the refueling floor, and the compartments can be isolated, water in that compartment can be removed, and then the PCCS heat exchangers can be serviced. However, the design expectations are that no tube plugging, or tube-to-drum weld repairs, would be required anytime during the 60-year design lifetime for these heat exchangers.

A valve is provided at the bottom of each PCC sub compartment that can be closed so the sub compartment can be emptied of water to allow PCCS heat exchanger maintenance.

The PCCS System is diagrammed on the "ESBWR Enhanced Passive Containment Cooling System Schematic Diagram", found in Appendix A. In the discussion that follows, additional features and capabilities are described.

4.2.2 Safety Design Bases

4.2.2.1 Safety Design Bases

- The PCCS System shall be comprised of four safety-related PCC divisions that are electrically, mechanically, and physically separated in accordance with applicable design rules for separating safety-related divisions.
- The PCCS System is required to maintain the containment within its pressure limits (309 kPa gauge; 45 psig) for design basis accidents (DBAs). The PCCS System fulfills this pressure-limiting action by accomplishing heat rejection from the containment atmosphere to a sacrificial pool of water (the IC/PCC pool) located immediately outside of the containment.
- This external sacrificial pool (IC/PCC pool) is required to have sufficient boil off capacity, and the PCC heat exchangers are required to be sufficiently submerged within this pool, to withstand pool draw down action over a post-LOCA 72-hour period, so as to accept total heat inputs (without reducing the instantaneous rate of heat transfer below the instantaneous core decay heat rate) amounting (approximately) to the core decay heat integrated over a minimum of 72 hours post-LOCA. This heat rejection is the sole ESF (Engineered Safety Feature) performance requirement for the PCCS System.
- With respect to accomplishing its ESF function, an ESF-classified portion of the PCCS System is provided that is designed as a passive system without power actuated valves or other components that must actively function. Hypothetical failure of any active component in any non-ESF portion of any division shall not be capable of reducing the PCCS System performance below its ESF performance requirement.
- The PCCS System is required to be constructed of steel to such design pressure, temperature and environmental conditions that equal or exceed the upper limits of containment system reference severe accident capability. The design pressure of the

PCCS System is 759 kPa (gauge) (110 psig), and the design temperature is 171 ^{o}C (340 ^{o}F).

- Each PCC heat exchanger is required to transfer not less than 13.5 MWt heat when the containment atmosphere is comprised of pure saturated steam at 308 kPa absolute and 134.0 ^{o}C, with IC/PCC pool water saturation temperature at the pool elevation corresponding to one-third of tube height in the tube bank of 102.0 ^{o}C , with a poolside fouling factor of 0.0005 and tube-side fouling factor of 0.0000.

- The condensate from the PCC heat exchanger shall drain by gravity through a loop seal of adequate vertical height to prevent drywell steam-gas mixture from back flowing to the wetwell, bypassing the PCC heat exchanger tube banks, during any periods after completion of the few-second vent-clearing initial portion of the LOCA where drywell pressure is momentarily higher than wetwell pressure. The loop seal provides backflow protection during subsequent brief post-LOCA periods that are associated with opening/closing of the wetwell/drywell vacuum breakers. One such period can be when drywell pressure is temporarily reduced as a result of cold short-term GDCS coolant rising inside the RPV to spill out of a broken pipe. Other such periods can occur in the first few hours post-LOCA where containment responses are seeking to stabilize to a steady pressure-differential condition between drywell and wetwell airspace regions. The water seals shall be maintained in a filled condition during normal plant operations so that they are functional at the initiation of, and then throughout the period following a LOCA. The condensate flow rate draining from the PCC heat exchanger shall be unimpaired irrespective of the state of accumulated water inventory in the condensate drain tanks, with a combination of tank elevation, drain line piping size, and drain tank depth being designed to preclude any significant impairment of drain line flow rate.

- Water comprising the loop seal may be blown backwards into upstream portions of the PCCS System piping during the few seconds duration when a LOCA initially occurs. The design of the piping and PCC heat exchanger shall prevent this loop seal water from traveling any farther upstream than the lower drums of the PCC heat exchangers, and shall ensure this water promptly drains back to re-establish the loop seal once drywell/wetwell pressure differentials have reduced to values encountered during the remainder of the 72-hour LOCA event.

4.2.2.2 Plant Investment Protection Design Bases

- Coolant makeup from water sources connected external to the Reactor Building and supplied directly to the IC/PCC pool shall be provided by the Fuel & Auxiliary Pools Cooling System (FAPCS) via safety-related pipelines which require no valves inside the reactor building to open other than check valves.

- Auxiliary PCCS System piping and equipment are provided which enhance the plant investment protection features contributed by the PCCS System; these auxiliary piping and equipment are not ESF-related and, accordingly, contain certain valves and equipment which function by active means. Failure in any combination, and in any mode, of these latter valves and/or equipment shall not impair the capability of the ESF-portion of the PCCS System from performing its assigned ESF heat removal function.

- A suitable cover/lid shall be supplied and affixed to each condensate drain tank so as to preclude LOCA-generated debris entry while allowing free overflow in the event either the valves in the associated PCC condensate injection line fail to open, or the water level in the RPV stand at elevations equal to or higher than the lip of the condensate drain tanks.

4.2.3 Configuration and Special Features

The PCCS consists of four totally independent closed loop extensions of the containment. Therefore, ASME Code Section III Class 2, Seismic Category I, and TEMA Class R apply. Referring to the PCCS Schematic Diagram included in this section, note the 250 mm diameter stainless steel main PCCS steam inlet piping as originating at a point high in the drywell and being routed through the drywell roof slab via a guard piped penetration. The steam inlet line branches to supply a steam-gas mixture to the upper drums of a two-bank drum-and-tube type heat exchanger (PCC heat exchanger). Drywell atmosphere is forced through the PCC heat exchanger via the presence of a differential pressure that develops between the drywell and the pressure at the exhaust point of the noncondensables vent line. The drywell atmosphere consists predominantly of steam together with trace amounts of noncondensable gases (nitrogen, oxygen, and potentially hydrogen) and is nominally 32 ^{o}C hotter than IC/PCC pool water temperature. Nearly the entire steam component in this mixture condenses, as the mixture is forced downward through the vertical tubes of the PCC heat exchanger. Condensate drains into the lower drums where it drains into catch-basin-type condensate drain tanks. Piping (150 mm diameter, stainless steel) connects these tanks with dedicated condensate return nozzles on the RPV. The Schematic Diagram notes that the U-tube water seal in the drain line will be somewhat greater than 2500 mm in overall height.

The PCC heat exchanger noncondensables vent line and condensate drain line from each lower header are routed back to the drywell through a single containment penetration as shown on the diagram. The condensate collecting in the lower drum drains into an annular duct around the vent pipe and then flows in a line, which connects to a large common, drain line, which also receives flow from the other header.

The PCC condensate injection lines are each outfitted with a biased-open tilting-disc check valve and a pyrotechnic-type squib valve. The squib valve provides absolute leak-tight integrity during power generation operations against any reactor coolant losses. The function of the tilting-disc check valve is to prevent high-volume reverse flow in the injection line whether the squib valve either opens accidentally while the reactor is in normal power generation operation or opens properly during a LOCA but where the reactor depressurization has not fully completed, so that a small reverse differential pressure still exists. The leak-tightness specification on these tilting-disc valves is not particularly demanding, as the goal is simply to prevent gross reverse flows. The valve is specified to be mounted in a horizontal pipe run so that its disc aligns (by gravity) in a biased-open position. This is done so that if a LOCA occurred and assuming the disc fails to open wide (or to be frozen immobile), a minimum of injection flow will nevertheless still pass through the valve. The tilting-disc valve and its piping are robust enough to withstand the slamming closure of the disc onto the seat if the squib valve is accidentally fired with the reactor at full pressure and still remains capable of reopening after the positive differential hydraulic PCCS injection pressures are reestablished. A locked-open hand-

operated maintenance block valve is provided downstream of the squib valve. Condensate that has collected in these tanks by PCC heat exchanger action during the LOCA will flow back into the RPV once the squib valves are signaled-open at approximately 30 minutes following the LOCA, at which time the RPV will be fully depressurized.

A non-intrusive magnetically coupled torque-motor together with disc position sensors are provided external to the disc in the tilting-disc check valve. This test feature requires no axle or electrical penetrations of the pressure casing of the valve and therefore no seals and/or packing glands to impair free disc motion even with slight hydraulic pressures. This test feature is provided to enable in-service surveillance testing. The valve disc can be pulsed open or closed over full stroke to establish its readiness for functioning under demand conditions.

To ensure the U-tube water seal on the condensate drain line section is full at all times, level detection instrumentation is provided to signal water level in this U-tube seal and, if a low-level condition is detected, makeup into the U-tube water seal is provided automatically via supply from the Condensate Storage and Transfer System. Level detection instrumentation is also present to detect a condition of water accumulation in the condensate drain tanks. If water level exceeds a pre-determined set-point level, drain valves are opened to drain this water into the drywell equipment drain sump.

The Schematic Diagram records that the condensate drain tank is approximately 4.0 m tall and is be mounted at the elevation (approximately) of the upper surface of the drywell/wetwell diaphragm floor. Overflow from this tank occurs once the accumulated water level has risen to an elevation about 4.0 m above the diaphragm floor. It should be noted that the testing done for the PCC heat exchangers in the PANTHERS (SIET) test program was always done with the downstream leg-side of the water column (in the PANTHERS case, the GDCS pool surface elevation) standing at an elevation just 0.75 m below the bottom surface of the drywell roof slab and which corresponds to approximately 5.3 m above the diaphragm floor. This “back-pressure” in the PANTHERS tests never was found to inhibit the draining of the condensate from the PCC heat exchanger under test--that is, condensate never backed-up into the lower drums of the PCC heat exchanger. The conclusion is that an adequately low drain line discharge elevation maximum level (4.0 m above diaphragm floor) is provided in ESBWR to give uninhibited flows even with the rating of the PCC heat exchanger being increased by 35%.

Spectacle-type flanges and blind-flange connections are provided at selected locations on pipelines connected to the PCC heat exchanger. These allow performing hydrostatic and leak-check tests on the PCC heat exchanger. The pressurizing connection is made part of the blind-flange component.

Seismic supports or braces that connect to compartment bulkheads are attached to the upper drums of the PCC heat exchangers to prevent relative motions between upper and lower drums that might otherwise, during a design basis earthquake, induce significant tube wall stresses. The supports or braces are such as to allow vertical thermal growth resulting from the differences between nominal, and accident, temperature levels.

The PCC condensate injection line pipe runs traverse horizontally to approach the RPV, turning upward to extend a minimum of 0.5 m just before the line bends into the horizontal to

connect to the RPV condensate return nozzle. This feature minimizes the horizontal run at the RPV condensate return nozzle and thus minimizes the possibility for continuous circulatory-type movements ("thermal striping") of reactor coolant out of and back into the RPV. These slow flows could be driven by small temperature differences between upper (0 ^{o}) and lower (180 ^{o}) ligaments of this piping. This also ensures that the squib valve will have cold water on both sides of its disc.

A locked-open hand-operated maintenance block valve with back-seatable stem design is located in the branch piping immediately downstream of the squib valve within the traversing horizontal branch run prior to its upward turn(s) connecting to the RPV condensate return nozzle. The inside flow passage of the forged RPV condensate return nozzle has a venturi profile with the diffuser portion being on the downstream (i.e., RPV interior) side. This configuration minimizes the flow losses during PCC heat exchanger condensate injection, while presenting a flow-limiting effect at the throat of the venturi in the event of a guillotine-type LOCA at the connection of branch run to RPV nozzle. Venturi throat diameter is approximately 100 mm and has a throat length of at least 10 cm such that the homogeneous flow model can be applied in LOCA analyses.

The logic elements that provide controls for the actuation of PCC condensate injection line squib valves and the batteries that provide power to actuate these valves are located outside the containment. The squib valves are signaled to open following a specified time delay and after a confirmed low-low water level (RPV Level-1) condition is detected and sealed-in to SSLC logic. Typically, these valves open approximately 30 minutes following receipt of the confirmed RPV Level-1 signal, subject to RPV transient water level being no higher than the elevation at which overflow from the condensate drain tanks would occur.

Attention is paid in the design of the squib valves and tilting-disc valves to ensure that no internal fragments are produced of a size which if transported downstream could, by themselves or collectively, credibly represent a threat of blockage at the RPV condensate return nozzle throats. The squib valves and their pyrotechnic charges are fully qualified for the rigors of LOCA service, including the ability to fire-open upon demand even if the valve has previously been submerged in 149 ^{o}C water for as long as 100 days.

All PCCS components and piping are constructed with nuclear grade stainless steel. The system has a design life of 60 years, except for the pyrotechnic charges, which have a service life of four years, which has been preceded by a shelf-life residency of up to four years. The electrical devices which have a design life of 10 years minimum and gaskets, seals and lubricants are designed typically for a six-year service life.

The IC/PCC pool interfaces with the FAPCS, which periodically removes and then returns cooled, purified water back into the IC/PCC pool. These functions are automatically terminated in the event of occurrence of low water level conditions inside the RPV.

In ESBWR--different from the SBWR--the PCCS is totally independent from the Gravity-Driven Cooling System including its GDCS pools.

The IC/PCC pool water in the compartments housing the PCC heat exchangers can heat up to about 102 ^{o}C . Non-radioactive steam can then form with a slight positive pressure relative to station ambient. The steam will then vent from the steam space above each PCCS heat exchanger and be released to the atmosphere through large-diameter discharge vents. A moisture separator is installed at the entrance to the discharge vent lines to preclude excessive moisture carryover and loss of IC/PCC pool water. IC/PCC pool makeup clean water supply for replenishing level is normally provided from the Makeup Water System. Level control is accomplished by using an air-operated valve in the make-up water supply line. The valve opening and closing is controlled by water level signal sent by a level transmitter sensing water level in the IC/PCC pool.

Cooling and cleanup of IC/PCC pool water is performed by the FAPCS. Several suction lines, at different locations, draw water from the sides of the IC/PCC pool at an elevation above the minimum water level that is required to be maintained during normal plant operation. The water is cooled and cleaned, and is returned back to the pool.

The FAPCS provides safety-related dedicated makeup piping, independent of any other piping, which provides an attachment connection at grade elevation in the station yard outside the reactor building, whereby a post-LOCA water supply can be connected.

4.2.4 System Operation

Normal Plant Operation

During normal plant operation, the PCCS loops are in “ready standby.”

Plant Shutdown Operation

During refueling, PCCS heat exchanger maintenance can be performed after closing the locked open valve which connects any given IC/PCC pool PCC heat exchanger sub compartment to the common parts of the IC/PCC pool, and removing pool water from that sub compartment.

Passive Containment Cooling Operation

The PCCS heat exchangers receive a steam-gas mixture supply directly from the drywell; the ESF portion of the PCCS loop has no valves, so the PCC heat exchangers immediately start into operation, following a LOCA event. Noncondensables, together with steam vapor, enter the PCCS heat exchanger; steam is condensed inside the PCC heat exchanger’s vertical tubes, and the condensate, which is collected in the lower headers, is discharged to the condensate drain tanks. Any noncondensable gases are purged to the suppression chamber through the noncondensables vent line.

Condensate Return-to-RPV Operation

At approximately 30 minutes following detection and seal-in of LOCA signals, logic controlling the squib valves in the PCC condensate injection lines are sent the second of two signals that is sealed-in and supplied to an AND logic gate. The second logic signal is “RPV

Water Level NOT higher than condensate drain tank overflow elevation". If both signals are present simultaneously, the squib valves in the PCC condensate injection lines will fire open. This will allow draining of these tanks to the RPV, supplementing the coolant arriving from the GDCS pools. Inasmuch as it is expected that RPV post-LOCA coolant water level will not be higher than this drain tank overflow elevation (because this latter overflow elevation is intentionally specified to be slightly higher than the centerline elevations for the DPV stub-tube nozzles), continued uninterrupted flows from the condensate drain tanks into the RPV should take place in an endless fashion throughout the balance of the LOCA event. Any delay in the arrival of the above two simultaneous signals implies a surplus of water is present and accumulating in the RPV.

4.2.5 Safety Evaluation

The PCCS heat exchanger is an extension of the containment (drywell) pressure boundary and it is used to mitigate the consequences of an accident. This function classifies it as a safety-related engineered safety feature (ESF). ASME Code Section III, Class 2 and Section XI requirements for design and accessibility of welds for in-service inspection apply to meet 10CFR50, Appendix A, Criterion 16. Quality Group B requirements apply per RG 1.26. The system is designed to Seismic Category I per RG 1.29. The common cooling pool that PCC heat exchangers share with the isolation condensers (ICs) of the Isolation Condenser System is a safety-related ESF, and it is designed such that no locally generated force (such as an IC system rupture) can destroy its function. Protection requirements against mechanical damage, fire and flood apply to the common IC/PCC pool.

As protection from missile, tornado and wind, and aircraft crash, the PCCS System parts outside the containment are located in a sub compartment of the safety-related IC/PCC pool to comply with 10CFR50, Appendix A, Criteria 2 & 4.

The PCCS heat exchanger will not fail in a manner that damages the safety-related IC/PCC pool because it is designed to withstand induced dynamic loads, which are caused by combined seismic, or DPV/SRV or LOCA or aircraft crash shock load conditions in addition to PCCS operating loads.

In conjunction with the pressure suppression containment, the PCCS System is designed to remove heat from the containment to comply with 10CFR50, Appendix A, Criterion 38. Provisions for inspection and testing of the PCCS System are in accordance with Criteria 39, 52 & 53. Criterion 51 is satisfied by using non-ferritic stainless steel in the design of the PCCS System.

The intent of Criterion 40, testing of containment heat removal system is satisfied as follows:

- The structural and leak tight integrity can be tested by periodic pressure testing.
- Functional and operability testing is not needed because there are no active components of the system.

- Performance testing during in-plant service is not feasible; the performance capability of the PCCS heat exchangers has been proven by the full-scale near-prototype PCCS heat exchanger tests (SIET PANTHERS test facility). Performance has been established for the range of in-containment environmental conditions following a LOCA. Integrated containment cooling tests have been completed on a full-height reduced-section test facility (PSI PANDA), and the results have been correlated with TRACG computer program analytical predictions; this computer program is used to show acceptable containment performance

4.2.6 Testing and Inspection Requirements

The Passive Containment Cooling System is an extension of the containment, and it will be periodically pressure tested as part of overall containment pressure testing. Also, the PCCS loops can be isolated for individual pressure testing during maintenance.

If additional in-service inspection becomes necessary, it is unnecessary to remove the PCCS heat exchanger because ultrasonic testing of tube-to-header welds and eddy current testing of tubes can be done with the PCCS heat exchangers in place during refueling outages.

4.2.7 Instrumentation Requirements

The PCCS System has instrumentation which is separate from the Containment System. Control logic is not needed for its ESF (containment cooling) function. There are no ESF-classified sensing or power actuated devices.

5. Containment Design and Support Systems

5.1 Containment Structure, System and Arrangement Design

5.1.1 Containment Structure

The containment structure consists of the drywell top slab, the containment cylindrical walls, the suppression pool floor slab, the reactor pressure vessel (RPV) pedestal, and the basemat. The concrete containment is lined with a steel liner for leaktightness. The containment cylindrical wall extends below the suppression pool floor slab, to the common basemat, which also supports the reactor building. These structural features are shown in the containment arrangement drawings provided in Appendix B.

The containment (drywell) top slab supports the IC/PCC pools and the service pools. The service pools consist of the buffer pool and the storage pool for the RPV dryer/separator. The suppression pool floor slab supports the suppression pool water. The RPV pedestal supports the RPV, the reactor shield wall, the vent wall structure and the suppression pool.

The reinforced concrete containment and the reactor building are founded on a common reinforced concrete basemat. The top of the basemat is at elevation -10000 mm which is below grade level. All elevations of the arrangement drawings (Appendix B) are with respect to "invert zero" which is the bottom elevation of the inside of the reactor pressure vessel. All elevations are referenced from that zero point.

5.1.2 Containment Internal Structures

The containment internal structures consist of the diaphragm floor slab, ventwall, Gravity-Driven Cooling System (GDCS) pool walls, drywell equipment and pipe support structure, reactor shield wall, and the RPV stabilizer and support bracket. These structures are shown in the general arrangement drawings of Appendix B. The containment internal structures are of structural steel construction.

The diaphragm floor slab acts as a barrier between the drywell and the suppression chamber. The top of the diaphragm floor slab is at elevation 17500 mm. The diaphragm floor slab is supported on the reinforced concrete containment wall at its outer periphery and on the ventwall at its inner periphery. The diaphragm floor slab is a composite steel/concrete design. The space between the floor slab top and bottom plates is filled with insulating perlite concrete. The slab is supported by a system of radial beams spaced at 15 degrees and spanning between the ventwall structure and the reinforced concrete containment wall.

The reactor shield wall ventwall structure is also a steel/concrete composite design consisting of two concentric carbon steel cylinders connected together by vertical web plates at 15 degrees on center. The reactor shield wall vent wall structure is anchored at the bottom into the RPV pedestal and is restrained at the top by the diaphragm floor slab at elevation 17500 mm. The cylindrical annulus carries ten 1.2 m diameter vent pipes and 12 safety relief valve downcomer pipes with sleeves, from the drywell into the suppression pool. The space in the

cylindrical annulus is filled with insulating perlite concrete in order to minimize long-term heat transfer from the drywell to the wetwell.

There are three GDCS pools supported on top of the diaphragm floor slab. The pools on one side are contained by the reinforced concrete containment wall and on the other side by structural steel walls . These pools are part of the wetwell, having their walls sealed by bellows to the top slab.

The drywell equipment and pipe support structure consists of various structural steel components such as beams and columns that resist torsion and biaxial bending. The beams span between the reactor shield wall and the vertical support columns, which are anchored to the diaphragm floor, slab. The drywell equipment and pipe support structure provides support for piping, pipe whip restraints, mechanical equipment, electrical equipment, and general access platforms and stairs.

The reactor shield wall is a 160 mm thick steel cylindrical structure which surrounds the RPV. It is supported by the RPV support brackets and the reactor pedestal. The function of the reactor shield wall is to attenuate radiation emanating from the RPV. In addition, the reactor shield wall provides structural support for the RPV stabilizer, the RPV insulation and the drywell equipment and pipe support structure. Openings are provided in the reactor shield wall to permit the routing of necessary piping to the RPV and to permit inservice inspection of the RPV and piping.

5.1.3 Applicable Codes (Unless Local Country Codes Apply)

- American Society of Mechanical Engineers (ASME) Boiler and Pressure Vessel Code, Section III, Rules for Construction of Nuclear Power Plant Components, Division 2, Code for Concrete Reactor Vessels and Containments, Subsection CC.
- ASME Boiler and Pressure Vessel Code, Section III, Division 1, Nuclear Power Plant Components, Subsection NE.
- ACI 349: Code Requirements for Nuclear Safety-Related Concrete Structures.
- AISC: Specification for Structural Steel Buildings - Allowable Stress Design (ASD) and Plastic Design.
- ANSI/AISC - N690: Specifications for the Design, Fabrication and Erection of Steel Safety-Related Structures for Nuclear Facilities, American Institute of Steel Construction.

5.1.4 Code Classifications and Safety Category

5.1.4.1 Containment

The reinforced concrete containment is a Safety Category 1 structure. The pressure boundary areas of the reinforced concrete containment are identified in Figure 5.1-1. The reinforced concrete containment is designed for the rules established in Subsection CC, Division 2, Section III of the ASME Boiler and Pressure Vessel Code. The portion of the basemat within

the reinforced concrete containment cylinder outer diameter must satisfy the ASME Code. The remainder of the basemat is designed in accordance with the ACI 349 code.

The other structural components of the containment identified below are designed for the rules of the corresponding indicated subsections of the ASME Boiler and Pressure Vessel Code, Section III.

Component	ASME Section III
Containment drywell head	Div. 1 Subsection NE
Liner and anchorage	Div. 2 Subsection CC
Penetration including penetration anchorage	Div. 1 Subsection NE & Div. 2 Subsection CC
Equipment hatch & access hatch	Div. 1 Subsection NE

5.1.4.2 Containment Internal Structures

The containment internal structures are Safety Category 1 structures. The containment internal steel structures are designed in accordance with the applicable codes for steel structures identified in Section 5.1.3 above.

5.1.5 Functional Requirements of Components and Parts

The reinforced concrete containment including the internal structures are Safety Category 1 structures from the standpoint of importance to safety. When subjected to extreme environmental loads, or in the event of postulated accident conditions, the reinforced concrete containment, and the attached systems and components necessary for safe shutdown of the power plant will remain functional.

The design life of the reinforced concrete containment and internal structures is 60 years.

The concrete containment pressure boundary identified in Figure 5.1-1 is lined with steel liner plate for the prevention of leakage from the reinforced concrete containment resulting from a loss-of-coolant accident (LOCA). The liner plate is 6 mm (1/4 in.) thick stainless steel material of ASME SA-240 Type 304L in the wetted portion of the reinforced concrete containment wetwell, and 6 mm thick carbon steel material of ASME SA-516 Grade 60 or 70 in other areas of the reinforced concrete containment. To inhibit corrosion, the carbon steel liner is provided with stainless steel cladding of ASME SA-240 Type 304L in the non-wetted portion of the wetwell and with a suitable coating in the drywell. No allowances for reduction of thickness on account of corrosion are considered. Its function is to provide leaktightness as per the strain criteria specified in ASME Section III Division 2. Pressure resisting steel components such as the

drywell head and equipment hatches, are provided with corrosion allowances in accordance with ASME Code requirements.

5.1.6 Design Loads

Identification and definition of the various design loads taken into account for the reinforced concrete containment and, where applicable, the reactor building are given in the paragraphs below:

Dead Load : The dead load of the structure and equipment plus any other permanent loads, including lateral soil pressure, and hydrostatic pressure of water in various pools. Structures supporting fluid loads during normal operation and accident conditions shall also be designed for the hydrodynamic (sloshing) loads.

Live Load: Live loads, including any moveable equipment loads and other loads which vary in intensity and occurrence. In loading combinations that include seismic loads, the live loads defined to be present when the plant is operating are included with the dead loads for the calculation of design seismic forces. Unless otherwise determined, the minimum live loads included in the seismic calculations are 25% of the design live loads.

Flooding Load: Hydrostatic pressures and buoyant load pressures on structures below the flood level.

Temperature Effects:

Normal Operating Condition: Thermal effects and loads during normal operating, testing startup or shutdown conditions, including liner plate expansion, equipment and pipe reactions, and thermal gradients based on the most critical transient or steady state thermal gradient.

Accident Conditions: The temperatures for accident conditions at various locations and for various periods of time following a LOCA.

Design Pressure Loads (Operating, Test, Accident, SRV and LOCA): The pressure and differential pressure loads in the containment for normal operating conditions, test conditions and design basis accident (DBA) conditions are considered. Some of these pressure loads (such as SRV discharge, condensation oscillation and chugging) occur in the suppression pool and result in hydrodynamic loads. Provided below are brief descriptions of these suppression pool hydrodynamic loads.

Safety Relief Valve (SRV) Dynamic Loads: During normal operation the SRV discharge line (safety relief valve discharge line) piping contains nitrogen and a column of water whose height is determined by the submergence of the safety relief valve discharge line in the suppression pool and the DW to WW pressure difference. Upon SRV actuation, pressure builds up in the safety relief valve discharge line as steam compresses the nitrogen and forces the water column through the quencher into the suppression pool. During this water clearing phase the pressure in the safety relief valve discharge line builds to a peak as the last of the water is expelled. The compressed cushion of nitrogen between the water slug and the effluent steam

exits the quencher and forms four clouds of small bubbles that begin to expand to the lower pool pressure. This expansion leads to the coalescence of the bubble cloud into four bubbles. The four bubbles continue to oscillate, displacing the water propagating a pressure disturbance throughout the suppression pool. The dynamics of the submerged bubbles are manifested in pressure oscillations arising from the bubble expansion coupled with the inertial effects of the moving water mass. The sequence of expansion and contraction is repeated with an identifiable frequency until the bubbles reach the pool surface.

Following the nitrogen-clearing phase, steady steam discharge flow is established and continues until the SRV is closed or the RPV is depressurized. The steam enters the pool from the quencher as submerged jets and is completely condensed in the pool. The suppression pool boundary pressure loads caused by the oscillation of the condensing steam jets at the quencher are considered in the design.

For multiple SRV discharge conditions, the basic discharge line clearing phenomena are the same as for single SRV discharge. The loads on structures in the suppression pool, including the pool boundary, are the result of the combined effects of SRV discharges at a number of locations in the suppression pool.

The following SRV actuation cases are considered: single SRV discharge for first and subsequent actuations and multiple SRV discharge. The maximum suppression pool boundary pressure loads for single SRV discharge and for multiple SRV discharge are considered in the design. Since these are dynamic loads, dynamic load factors are considered in the design.

Vent Clearing : Following a large or intermediate break LOCA, the nitrogen and steam in the drywell are purged into the wetwell suppression pool through the DW/WW main LOCA vents. The acceleration and diffusion of the fluids, provide loads that are part of the design basis

Pool Swell Loads: The discharge of the steam and non-condensibles to the pool cause rapid level increases and oscillation. The loads due to this effect are also included in the design basis.

Condensation Oscillation (CO) Dynamic Loads: Following a large or intermediate break LOCA, the nitrogen and steam in the drywell are purged into the wetwell suppression pool through the DW/WW main LOCA vents. As the steam is blown down into the suppression pool the steam is condensed in the horizontal vent exit region. At medium vent flow rates, the water-to-steam condensation interface rapidly oscillates causing pressure oscillations in the pool. This phenomenon, referred to as “condensation oscillation”, produces oscillatory pressure loading on the containment structure.

The suppression pool pressures for condensation oscillation, including the dynamic load factors are considered in the design.

Chugging Dynamic Loads: As the reactor pressure vessel blowdown continues, the vent flow rate decreases and the vent flow nitrogen content becomes negligibly small. After the steam flow has been reduced to a low level the steam “chugs” in the upper row of horizontal vents. At the lower vent flow rates, a steam bubble will alternately grow at the vent exit, and

then nearly instantaneously collapse, in a condensation process referred to as "chugging". The chugging process produces transient dynamic loading on the vents and the suppression pool boundary.

The suppression pool pressures for chugging, including the dynamic load factors are considered in the design.

Depressurization Valve Actuation Loads: The reactor is automatically depressurized by using SRVs in combination with depressurization valves (DPVs) when low reactor water level is signaled. The effects associated with DPV operation such as jet loads and pressures resulting from DPV operation are considered.

Isolation Condenser (IC) Operation Loads: The Isolation Condenser System consists of four heat exchanger loops. The ICs limit reactor pressure to less than the lowest setpoint of the SRVs for events having occurrence frequencies that classify these occurrences as moderately frequent events. The pressure loads in the air space of the IC pools during normal plant operation, reactor isolation mode, and the accident pressure due to the postulated break of the steam supply piping connected to the IC are considered.

Passive Containment Cooling System (PCCS) Operation Loads: Each PCCS loop consists of a condenser which is open to the primary containment, a drain line to the PCC condensate drain tank, a vent discharge line and a cooling pool that is shared with the isolation condenser heat exchangers. The thermal effects associated with operation of the PCCS and the loads resulting from operation of the PCCS are considered. The loads due to PCCS non-condensable vent discharges into the suppression pool are also considered.

Seismic Loads: The peak ground acceleration for the Design Basis Earthquake (DBE) is 0.25g in both the horizontal and vertical directions. Three horizontal ground motion design spectra are considered in the design. The structural dynamic analysis includes the effect of soil-structure interaction (SSI) and shall be done as a structure.

Seismic Category 1 is defined in Regulatory Guide 1.29. The soil modeling considers the effects of embedment, soil layering, ground water location, and strain-dependent soil properties. The seismic SSI analyses for the design of the reactor building complex are performed for generic site conditions.

The DBE loads (two perpendicular horizontal components and one vertical component) based on the seismic SSI analysis are applied to the finite element model as equivalent static forces. The resulting moments and forces at various sections of the structure are combined based on the square-root-of-the-sum-of-the-squares (SRSS) method.

Pipe Break Loads: These loads are local effects on the containment due to a postulated high energy pipe break. These local effects include loads on the containment resulting from jet impingement, impact and pipe reaction loads due to a ruptured high-energy pipe.

Normal Pipe Reactions: Piping reactions which occur under normal operating or shutdown conditions, due to the most critical transient or steady-state conditions.

Post Accident Internal Flood: The vertical and lateral pressures of liquids on the walls and floors of structures and/or compartments due to post accident flooding.

The following loads are transmitted to the reinforced concrete containment and internal structures through the reinforced concrete containment/RB connections.

Aircraft Crash Impact Load: Two aircraft crash load cases are considered. The first load case is a 20 ton aircraft striking a 7 square meter area of the exposed outer surface of the RB at a speed of 215 m/s, resulting in a 110 million Newton peak force in 40 ms. The second load case is a 1.7 ton aircraft engine striking a 1.15 square meter area at a velocity of 100 m/s.

Extreme Wind Load: An extreme wind speed of 60 m/s is used to calculate the extreme wind pressure on the exposed surfaces of the RB.

External Explosion Load: A pressure pulse with a peak dynamic pressure of 100 mbar and a time duration of 300 ms is considered to be acting on the RB.

5.1.7 Design and Analysis Procedures

5.1.7.1 Containment

The reinforced concrete containment is part of the integrated reactor building. To determine internal forces resulting from the design loads, a detailed structural model is developed and the structural analysis of the integrated reinforced concrete containment/RB structure is performed utilizing a linear elastic finite element computer program such as "STARDYNE" or other appropriate program. The integrated structural model includes the reinforced concrete containment; reinforced concrete containment internal structures such as the diaphragm floor (diaphragm floor) slab, the vent wall and the reactor shield wall; IC/PCC pool girders; operating floor slab; steam tunnel; reactor building walls and slabs; and the basemat. The RPV and drywell head are included in this model. The RB superstructure above the operating floor is not included in this model, however its mass is distributed among the supporting components.

The calculated membrane forces, shear forces, and bending moments at selected critical locations are combined in accordance with the ASME/ACI 359 Boiler and Pressure Vessel code. The design is in accordance with the provisions of subarticle CC-3500 of the ASME Code Section III, Division 2.

The reinforced concrete containment analysis and the design procedures include methodology for the calculations of concrete stress, rebar stress and liner plate strain caused by thermal and other non-thermal loads considering the effects of concrete cracking. The interaction effects between the liner and the concrete containment are considered in the analysis and design.

The allowable stresses and strains specified in the subarticle CC-3400 of ASME Code Section III Division 2 are used.

5.1.7.2 Containment Internal Structures

The containment internal structures analysis model is extracted from the integrated reinforced concrete containment/RB structural model discussed in Section 5.1.6.1. A static finite element analysis is performed to calculate the internal forces resulting from the design loads. The design and analysis procedures for the containment internal structures, including assumptions on boundary conditions and expected behavior under loads are in accordance with ANSI/AISC-N690.

The calculated membrane forces, shear forces, and bending moments at selected critical locations are combined in accordance with the ANSI/AISC-N690 code. Either the working stress design method or the plastic design method described in ANSI/AISC-N690 is used in the design.

The structural acceptance criteria are in compliance with ANSI/AISC-N690.

5.1.8 Materials

5.1.8.1 Containment

The materials used in the construction of the containment are in accordance with Article CC-2200 of the ASME Code Section III, Division 2.

The compressive strength of concrete at 28 days is: 27.56 MPa for structural concrete.

The effect of radiation on the concrete properties is insignificant and hence reduction of concrete strength on account of radiation is not considered. Concrete has a tendency to change properties when subjected to elevated temperatures. Reductions of concrete strength caused by high temperatures are considered in the design and analysis.

Reinforcing steel for concrete are deformed bars meeting the requirements of the "Specification for Deformed and Plain Billet Steel Bars for Concrete Reinforcement (ASTM A-615, Grade 60)". Reinforcing steel also has a tendency to decrease in strength at elevated temperatures. Reductions of reinforcing steel strength caused by high temperatures are considered in the design and analysis.

5.1.8.2 Containment Internal Structures

The materials used in the construction of containment internal structures are in accordance with ANSI/AISC-N690.

Structural steel shall conform to ASTM A36 or A572 Gr. 50. The steel allowable stress values are decreased for temperatures greater than 100°C.

5.1.9 Description and Functioning of Containment System

The primary function of the ESBWR containment system is to contain any fission products released during an accident. The system consists of multiple barriers including the reactor building which surrounds the primary containment (called the containment in this report). Similar to most previous BWR plants, the ESBWR uses a pressure suppression containment system. The pressure suppression containment system maintains the structural integrity of the pressure boundary between the containment and its exterior following any accident including a postulated loss-of-coolant accident (LOCA) resulting from the rupture of any of the pipes which connect to the reactor pressure vessel (RPV). The containment system includes the containment volume, made up of the drywell (DW) and the suppression chamber (SC), and supporting systems. A principal supporting system is the Containment Isolation System (CIS) which, in the event of a LOCA, isolates all pipes and ducts penetrating the containment boundary. The containment structure, in conjunction with the CIS and the reactor building must limit fission product leakage during and following a postulated accident to values which ensure that plant fission product releases will be within specified limits.

The ESBWR containment is a reinforced concrete cylindrical structure which encloses the RPV and its related systems and components. Key containment components and design features are shown in the "ESBWR Containment System - Schematic Diagram", found in Appendix A. The containment is divided into a DW region and a SC region with an interconnecting vent system. The DW region is a leak-tight gas space surrounding the RPV. It receives steam, water, and fission products released from the RPV during an accident. The SC volume includes the pressure suppression pool and the gas space above it. The suppression pool is a large body of water which absorbs energy by condensing steam from SRV discharges and postulated pipe breaks. The DW/SC Vent System directs pipe break blowdown flow from the DW to the suppression pool. The gas space above the pool is a leak-tight region which is sized to retain the DW gases which are conveyed to it along with the blowdown fluids following a pipe break. One of the major innovations of the ESBWR is to incorporate the gas space above the surface of the draining GDCS pools into the SC gas space. This design feature effectively increases the post-accident SC volume (without increasing the containment structure) and, thereby, the pressurization associated with the transfer of DW gases to the SC.

When subjected to a pipe break, the high-energy blowdown fluids from the RPV enter the DW and rapidly raise its pressure relative to the pressure in the SC. This pressure differential establishes flow from the DW to the suppression pool though the DW/SC vent system and the Passive Containment Cooling System. In the first few seconds following the accident, most of the DW gas is transported through the vents and the suppression pool to the SC gas space. The vent flow then turns to essentially pure steam which condenses in the suppression pool and raises its temperature. When the flows are high all the horizontal vents have flow through them. This results in a well mixed suppression pool. When the flows are reduced, the predominance of flow is through the uppermost horizontal vent, which results in pool vertical temperature stratification. In a relatively short time, the SC gas space comes into approximate thermal equilibrium with the pool surface at near 100% relative humidity. In this way, the inventory of DW gas transported to the SC and the temperature at the surface of the suppression pool effectively define the post-accident containment pressure. Following the initial RPV blowdown,

the DW-to-SC pressure differential decreases below the value required to sustain vent flow and then all the steam produced by RPV decay power flows through the Passive Containment Cooling System (PCCS).

A major innovation of the ESBWR containment design is the inclusion of the gas space above the GDCS pools as part of the SC gas space. The additional SC gas space volume, effectively created by the draining of the pools, gives substantial margins in calculated containment pressures. This high margin then makes the analysis of the ESBWR containment pressure especially tolerant of any analytical uncertainties. An important case in point is the issue of DW-to-SC bypass leakage. The potential opening of a bypass leakage path between the DW and SC gas space is a concern which resulted in a stringent requirement on the effective flow path area in a previous BWR passive safety system design.

Another significant feature of the ESBWR containment system is the revised configuration for the set of spillover holes which provide a DW-to-SC connection for transferring water from the DW to the suppression pool. Once in the suppression pool, the water can be used to maximum advantage for accident mitigation (i.e., by restoration of RPV inventory). The spillover function in the ESBWR is accomplished by ten pipes which are built into the vent wall at equal intervals around the circumference of the DW annulus. (The "DW annulus" is the region of the upper DW above the RPV skirt and pedestal and below the top of the diaphragm floor.) The entrance section of the spillover pipes is horizontally oriented with the inlet approximately one meter above the suppression pool normal water level. As the water level ascends through the DW annulus, it eventually reaches the entrance of the spillover pipes and flows to the suppression pool. The pipes are routed through the vent wall to near the bottom of the pool so that hot effluent will mix in an essentially uniform manner with the entire pool volume.

5.1.10 Containment System Design Bases

5.1.10.1 Safety Design Bases

The ESBWR containment system is designed to meet the following Safety Design Bases:

- The containment structure shall maintain its functional integrity when subjected to the peak transient pressures and temperatures, which result from any postulated LOCA. The design basis accident (DBA) is defined as the LOCA leading to the maximum DW and SC pressure and/or temperature. The DBA is postulated to occur simultaneously with a loss of all (offsite and onsite) AC power. For containment structural evaluation, the LOCA loads are combined with the inertial loads produced by the safe shutdown earthquake (SSE). The design temperature and design absolute pressure for the ESBWR containment are 171°C and 310 kPa gage, respectively.
- The containment structure shall be designed to withstand the maximum pressure difference between the DW and SC and between the containment and its exterior.

- The containment shall, with concurrent operation of the CIS, passive safety systems and reactor building, limit fission product leakage rates to values less than those, which would cause the maximum plant releases to exceed specified limits.
- The containment structure shall withstand fluid jet forces, coincident with LOCA loads, from the postulated rupture of any pipe within the containment.
- The containment structure shall withstand flooding to a sufficient depth above the active fuel to maintain core cooling and to permit safe removal of the fuel assemblies from the reactor core after the postulated DBA.
- The containment structure shall be protected from, or designed to withstand, the impact of missiles from internal sources and the uncontrolled motion of broken pipes.
- The containment shall direct the high-energy fluids from postulated pipe ruptures (LOCAs) in the DW to the suppression pool and the PCCS.
- The containment system shall allow for periodic pressure tests to measure the integrated leakage rate from the containment structure and through individual penetrations and isolation valves and the bypass leakage from the DW to the SC across the structural boundaries that separate these regions.
- The Containment Atmospheric Control System (CACS) will establish and maintain the containment atmosphere to less than 2.5 volume% oxygen during normal operating conditions. The CACS will also provide capability for containment overpressure relief.
- The Flammability Control System (FCS) shall mitigate the potential buildup of combustible gases generated by radiolytic decomposition of water and by metal-water reaction following a LOCA.

5.1.10.2 Plant Investment Protection Design Bases

- The Fuel and Auxiliary Pool Cooling System (FAPCS) will have the capability to draw water from the suppression pool and inject it into the RPV for inventory replacement. It will also have the capability to cool the suppression pool water by circulating it through a heat exchanger.
- The vertical sections of the DW-to-SC vent modules will be surrounded by a layer of cushioning material to prevent buckling from thermal expansion following a LOCA. This material will also have insulating properties to inhibit heat transfer from the vents to the SC.
- The diaphragm floor will be covered with a layer of insulating material to inhibit heat transfer from the DW to the SC gas space.
- The vacuum breakers will be designed for high reliability and leak tightness. The valves will be instrumented with position sensors to provide confirmation of secure seating. The failure of one position sensor will not result in loss of position sensing capability.

- The suppression pool pH will be maintained within limits, which ensure the acceptability of the water for mitigation of accident conditions.

5.1.11 Containment System Configuration and Special Features

The containment (sometimes referred to as the "primary" containment) consists of the following major structural components: RPV support structure (pedestal); diaphragm floor, forming the horizontal boundary between the DW and the SC; cylindrical vent wall, forming the vertical boundary between the DW and SC; suppression pool floor slab; cylindrical outer wall; top slab; and DW head. The cylindrical outer wall extends below the suppression pool floor slab to the reinforced concrete basemat which supports the containment and reactor building structures. The wetted portion of the SC interior has a stainless steel liner and the non-wetted portion has a carbon steel liner with stainless steel clad. The DW interior has a carbon steel liner with a suitable corrosion-resistant coating. The nominal thickness of the liner in each of these regions is 6.4 mm

Drywell

The DW is made up of two volumes which are geometrically separated by the RPV support skirt and pedestal. The upper DW (UDW) volume surrounds the RPV above the pedestal and houses the main steam, feedwater, GDCS, and PCCS piping, and the SRVs, DPVs, and DW coolers and their associated piping. The lower DW (LDW) volume surrounds the RPV below the pedestal and contains the RPV bottom drain piping, the fine motion control rod drives, and other miscellaneous systems and equipment below the RPV. The two DW volumes are connected by the open areas or spaces between the RPV support skirt. Both DW regions provide access from the containment exterior through a personnel hatch and an equipment hatch. The diameter of the hatches is 2.4 m, with the personnel hatches providing access through a 0.75 m by 1.85 m door.

Suppression Chamber

The SC is made up of a gas volume and a (suppression pool) water volume. The gas volume includes the volume above the suppression pool water level and the volume above the water levels in the three GDCS pools. The integration of these two gas regions is accomplished by means of three (one for each GDCS pool) SC/GDCS vent pipes (0.15 m inside diameter). As a result of the integration of the SC and GDCS gas volumes, the gas volume and total volume of the SC increase as the GDCS pools are drained following an accident. There is also a small increase in the pool volume and corresponding decrease in the gas volume due to the condensation of steam during the RPV blowdown. A catwalk, providing 360-degree personnel access, is suspended in the gas space above the suppression pool. The catwalk can be used during outages to examine such SC components as the SRV quenchers, passive autocatalytic recombiners (PARs), and vacuum breaker isolation valves. Access to the catwalk from the containment exterior is provided through a 2.4 m diameter personnel hatch with a 0.75 m by 1.85 m door.

The suppression pool is a large body of water which absorbs energy by condensing steam from SRV discharges and postulated pipe breaks. The SRVs discharge steam to the suppression pool through piping equipped with a quencher discharge device. Following a LOCA, the suppression pool also serves as a source of reactor makeup water and entrains radioactive materials routed to it with the blowdown flow.

DW/SC Connecting Vents

The SC is connected to the DW by a vent system (frequently referred to as the "main vents") which includes ten vent modules. Each vent module consists of a 1.2 m inside diameter vertical pipe which connects to the DW at the elevation of the top of the diaphragm floor and three 0.7 m inside diameter horizontal pipes which exhaust to the suppression pool at three elevations between the water surface and the pool bottom. The vent modules are built into the vertical cylindrical wall which separates the UDW from the SC. The vertical section of each vent module is surrounded by a layer of soft material which functions to mechanically cushion the pipes to prevent buckling and to thermally inhibit heat conduction to the SC.

Spillover Pipes

The ESBWR spillover function provides a DW-to-SC connection for transferring water from the DW to the suppression pool. Spillover is accomplished by ten pipes (0.2 m inside diameter) which are built into the vent wall at equal intervals around the circumference of the annular region of the UDW. The entrance section of the spillover pipes is horizontally oriented with the inlet approximately 0.5 meter above the suppression pool normal water level. If water, ascending through the DW annulus following a postulated LOCA, reaches the entrance of the spillover pipes, it will flow to the suppression pool. Once in the suppression pool, the water can be used to maximum advantage for accident mitigation (i.e., by restoration of RPV inventory). The spillover pipes are routed through the vent wall to near the bottom of the pool so that hot effluent will mix in an essentially uniform manner with the entire pool volume.

Standby Gas Treatment System

This is a non safety system and is provided in the plant as an extra layer of protection to minimize even further, any fission product releases from the plant. Plant release evaluations show that all criteria are met wih just normal performance of the primary containment and CIS. However, if excessive fission products were to leak out of the primary containment, this sytem would limit plant releases. The battery-powered Standby Gas Treatment System (SGTS) can be used during normal and post-LOCA operation to reduce the plant release.

Containment Isolation System

The Containment Isolation System (CIS) provides protection against release of radioactive materials to the environment as a result of accidents occurring in systems or components within the containment. Protection is provided by isolation of lines and ducts that penetrate the

containment boundary. Containment isolation is automatically initiated at specific operating limits and, once initiated, it proceeds to completion.

Containment Atmospheric Control System

During normal operation, the Containment Atmospheric Control System (CACS) establishes and maintains the containment atmosphere to less than 2.5 volume% oxygen to ensure an inert atmosphere. Capability is provided for periodic pressure testing to measure local and integrated leakage rates to confirm the containment leakage integrity. The CACS also ensures adequate ventilation for personnel working inside the containment during outages.

Drywell Cooling System

The Drywell Cooling System (DCS) maintains acceptable thermal conditions in the containment during normal plant operation. The DCS is not classified as safety-related because it can be shown that the loss of the DCS will not result in environmental conditions for the safety-related equipment within the containment which exceed the DBA environmental conditions for this equipment.

Flammability Control System

The Flammability Control System (FCS) mitigates the potential buildup of combustible gases generated by the radiolytic decomposition of water and metal-water reaction of active fuel cladding during a LOCA. The FCS is a safety-related system, designed for long-term continuous operation. The FCS performs its function by controlled reaction of hydrogen with oxygen at low volumetric concentrations of whichever of these two gaseous constituents is limiting the progress of the reaction. The FCS consists of passive autocatalytic recombiners (PARs), strategically located throughout the containment, including the upper and lower DWs and the SC gas space.

Vacuum Relief

The ESBWR design provides a vacuum relief function to limit the amplitude of a negative pressure differential between the DW and the SC. The vacuum relief function is accomplished by three DW/SC vacuum breakers installed in the diaphragm floor. Previous experience with similar designs shows that the ESBWR maximum negative pressure differential between the containment and its exterior will remain substantially below the design limit without the benefit of vacuum relief. Each vacuum breaker is equipped with a DC motor-operated valve which provides isolation capability if the vacuum breaker sticks open or leaks in its closed position.

The ESBWR vacuum breaker is designed for high reliability, leak tightness, stability (i.e., elimination of chatter) and resistance to debris. It operates passively in response to a negative SC-to-DW pressure gradient and is otherwise held closed by a combination of gravity and the normally positive SC-to-DW pressure gradient. A vertical-lift poppet disk with two bearings to maintain alignment constitutes the only moving part. The valve assembly is equipped with inlet and outlet screens to prevent debris entry. A leaktight design is achieved by use of a non-metallic main seat and a backup hard seat. The seats are designed such that the lodging of a

particle of the maximum size which can pass through the inlet/outlet screens on either seat will not prevent sealing of the valve. An anti-chatter ring around the periphery of the disk reduces seat to disk impact force and provides damping by energy absorption. Four position sensors are located around the disk periphery to provide the plant operator with confirmation that the disk is securely seated. Refer to Figure 5.1-1 for additional details.

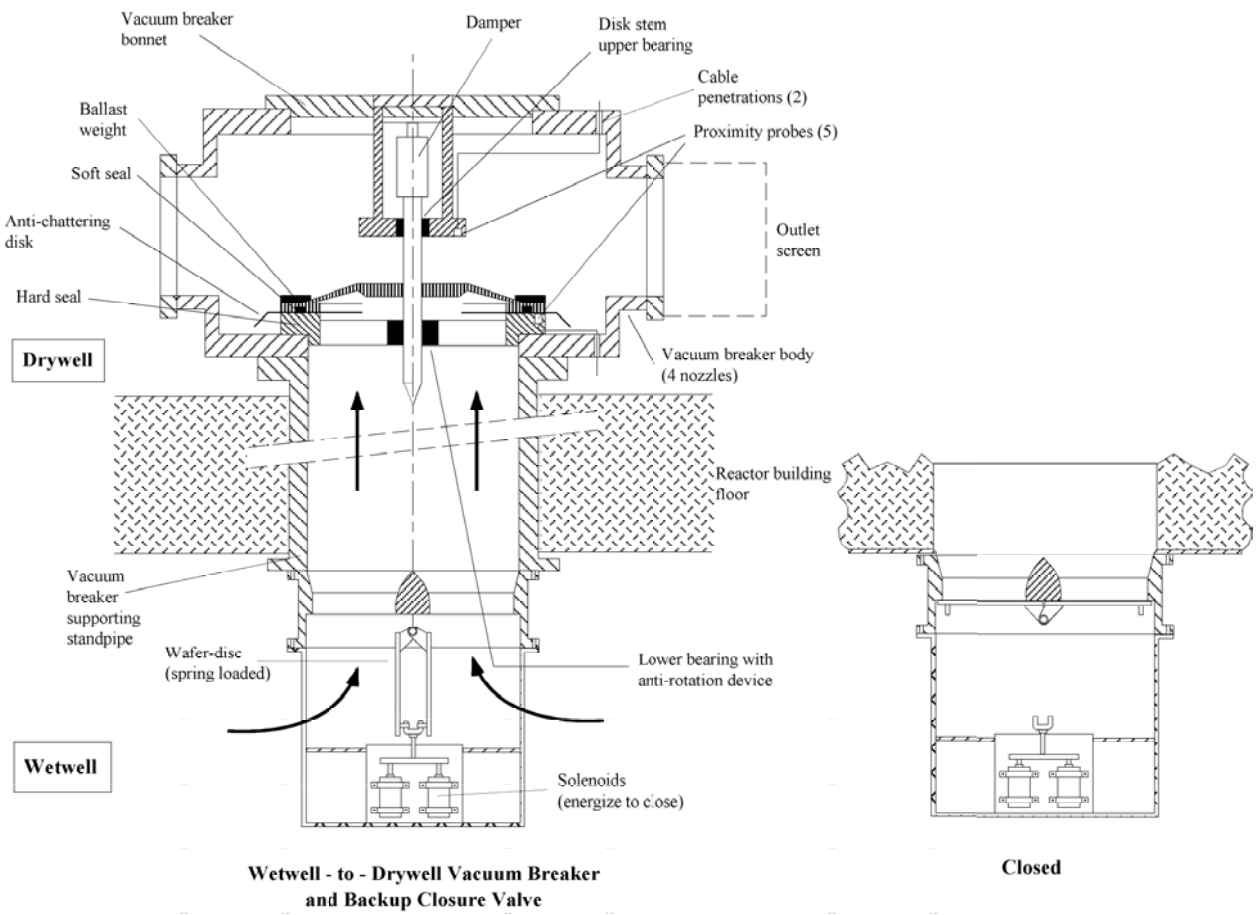

Figure 5.1-1 Containment Vacuum Breakers

5.1.12 System Operation

Normal Plant Operation

During normal plant operation, the DCS maintains the DW temperature below 57°C . The CACS maintains the oxygen concentration in the containment atmosphere below 2.5 volume%.

Plant Shutdown Operation

During plant shutdown the containment inerting atmosphere is replaced with air. The containment includes personnel and equipment hatches to the upper and lower DW and a personnel hatch to the SC gas space. The LDW has a work platform and the SC gas space has a catwalk for use in equipment servicing.

Post-LOCA Operation

Following a postulated LOCA, the DW is pressurized by high-energy fluids from the RPV. In the early portion of the post-LOCA transient, the DW pressure is relieved by flow of the inerting gas and steam through the main vent system to the suppression pool, where the steam is condensed. In the longer term, steam generated by decay power flows to the PCCS where its latent heat is converted to boiloff from the IC/PCC pool.

5.1.13 Safety Evaluation

The containment design will be evaluated on the basis of its ability to withstand the pressure and temperature caused by the limiting case of a postulated instantaneous guillotine rupture of one of the lines connected to the RPV. The analysis of this transient includes: (1) a short-term (blowdown) phase which extends from the instant of pipe rupture to the initiation of GDCS flow (essentially coincident with the termination of main vent flow); (2) a GDCS injection phase which extends from the end of the short-term phase to the time at which the heat-up of the subcooled GDCS water is no longer the primary mechanism for absorption of decay energy; and (3) a long-term phase characterized by the removal of decay energy by the PCCS and extending to 72 hours from the instant of LOCA. For the ESBWR, the maximum instantaneous containment temperature and pressure occur during the blowdown phase of the post-LOCA transient.

The evaluation of the long-term containment response to a postulated LOCA must include consideration of a limited amount of bypass leakage flow from the DW to the SC gas space. For the ESBWR, the design analysis limit for the effective area ($A/\sqrt{k}$) of the bypass leakage path is set at 1.0 cm^2. The Technical Specification limit, which must be demonstrated by periodic containment testing is set at 0.45 cm^2. This was judged to be the smallest leakage path which could be discriminated by an in-plant test of practical duration.

A second consideration in the design evaluation is the potential occurrence of a negative pressure differential between the containment and its outside environment or between the DW and the SC. Negative pressure differentials could be created by a condition in which the PCCS heat removal capability exceeds the decay energy production rate. Without mitigation, negative pressure differentials could damage the containment steel liner. The ESBWR design provides a vacuum relief function to limit the amplitude of a negative pressure differential between the DW and the WW. The vacuum relief function is accomplished by three DW/SC vacuum breakers installed in the diaphragm floor. Previous experience with similar designs has shown that the

maximum negative pressure differential between the containment and its exterior is substantially below the design limit without the benefit of vacuum relief.

A third consideration in the design evaluation of the containment is the occurrence of dynamic loads, originating in the suppression pool, during a postulated LOCA. Phenomena associated with the flow of a mixture of high-energy steam and inerting gas through the vents will produce hydrodynamic loads on the suppression pool boundary. Such loads can also occur as a result of SRV actuation and the subsequent discharge of a mixture of steam and gas to the suppression pool. The containment and its internal structures are designed to withstand all suppression pool dynamic loads resulting from a LOCA or SRV actuation in combination with loads from postulated seismic events.

5.1.14 Testing and Inspection Requirements

Pre-operational Testing and Inspection

Pre-operational testing and inspection of the containment and associated structures, systems, and components will be performed to demonstrate structural integrity and leak-tightness.

Post-Operational Leakage Rate Testing and Maintenance

Testing will be performed periodically to determine the containment integrated leak rate, containment penetration leakage rates, and containment isolation valve leakage rates. These tests are performed to ensure that leakage rates from the containment and through systems and components that penetrate the containment do not exceed maximum allowable rates. Maintenance of the containment will be performed, as necessary, to maintain leakage rates at or below the allowable values.

Liner and Seals

The stainless steel liner on the containment pressure boundary minimizes the potential for degradation of structural integrity by corrosion. Design features with the potential to deteriorate with age, such as flexible seals at penetrations, will be periodically inspected and tested to ensure that the integrity of the containment remains essentially the same as at original acceptance.

5.1.15 Instrumentation Requirements

Instrumentation is provided to monitor the following containment parameters:

- DW temperature;
- DW pressure;
- differential pressure from DW to SC and from DW to containment exterior;
- DW oxygen and hydrogen concentrations;

- DW radiation level
- SC gas space temperature;
- SC gas space pressure;
- differential pressure between SC and containment exterior;
- SC oxygen and hydrogen concentrations;
- SC radiation level;
- suppression pool temperature;
- suppression pool level;
- water level in GDCS pools;
- water level in DW;
- DW nitrogen makeup flow;
- SC nitrogen makeup flow;
- open/close position indication for SC to DW vacuum breakers.

The above measurements provide inputs to the Reactor Protection System and such containment-related system functions as suppression pool cooling, atmospheric control, and leak detection and isolation. The DW to SC differential pressure, together with the open/close indication, can be monitored to ensure proper functioning of the vacuum breaker system. In addition to providing system inputs, temperature, pressure, and radiation level are monitored for containment equipment environmental conditions.

5.1.16 Containment Arrangement and Layout

The containment is a reinforced concrete cylindrical vessel (RCCV), which encloses the reactor pressure vessel (RPV) and its related systems and components. The containment structure has an internal steel liner providing a leak-tight containment boundary. The containment is divided into a drywell region and a suppression chamber region with an interconnecting vent system. Key containment components and design features are exhibited in Figure 5.1-2.

The containment structure consists of the following major structural components:

- RPV support structure (pedestal),
- suppression pool floor slab,
- containment cylindrical outer wall,
- containment top slab with removable steel head,

- cylindrical vent wall,
- diaphragm floor separating the upper drywell and the suppression chamber.

The containment cylindrical outer wall extends below the suppression pool floor slab to the basemat. This extension is not part of the containment pressure boundary, however, it supports the upper containment cylinder. The reinforced concrete basemat foundation supports the entire containment system, which includes the RPV pedestal, and extends to support the reactor building surrounding the containment.

5.1.16.1 Drywell

The drywell (Figure 5.1-2) comprises two volumes:

1. an **upper drywell volume** surrounding the upper portion of the RPV (down to the RPV support skirt) and housing the main steam and feedwater piping, Gravity-Driven Cooling System (GDCS System) pools and piping, Passive Containment Cooling System (PCCS System) piping, Isolation Condenser System (ICS System) piping, safety-relief valves (SRVs) and discharge piping (SRVDLs), depressurization valves (DPVs), drywell coolers, reactor shield wall (RSW), and other miscellaneous systems and support structures; and
2. a **lower drywell volume**, below the RPV support skirt, housing the lower portion of the RPV, fine-motion control rod drives (FMCRDs), vessel bottom drain piping, drywell sumps, and other miscellaneous systems, support structures and equipment below the RPV.

There is no physical, barrier-type separation between the lower drywell and the upper drywell. Due to the configuration of the RPV support structure, a communication path exists between the upper and lower drywell. Refer to Section 2.5 for a discussion of the RPV support.

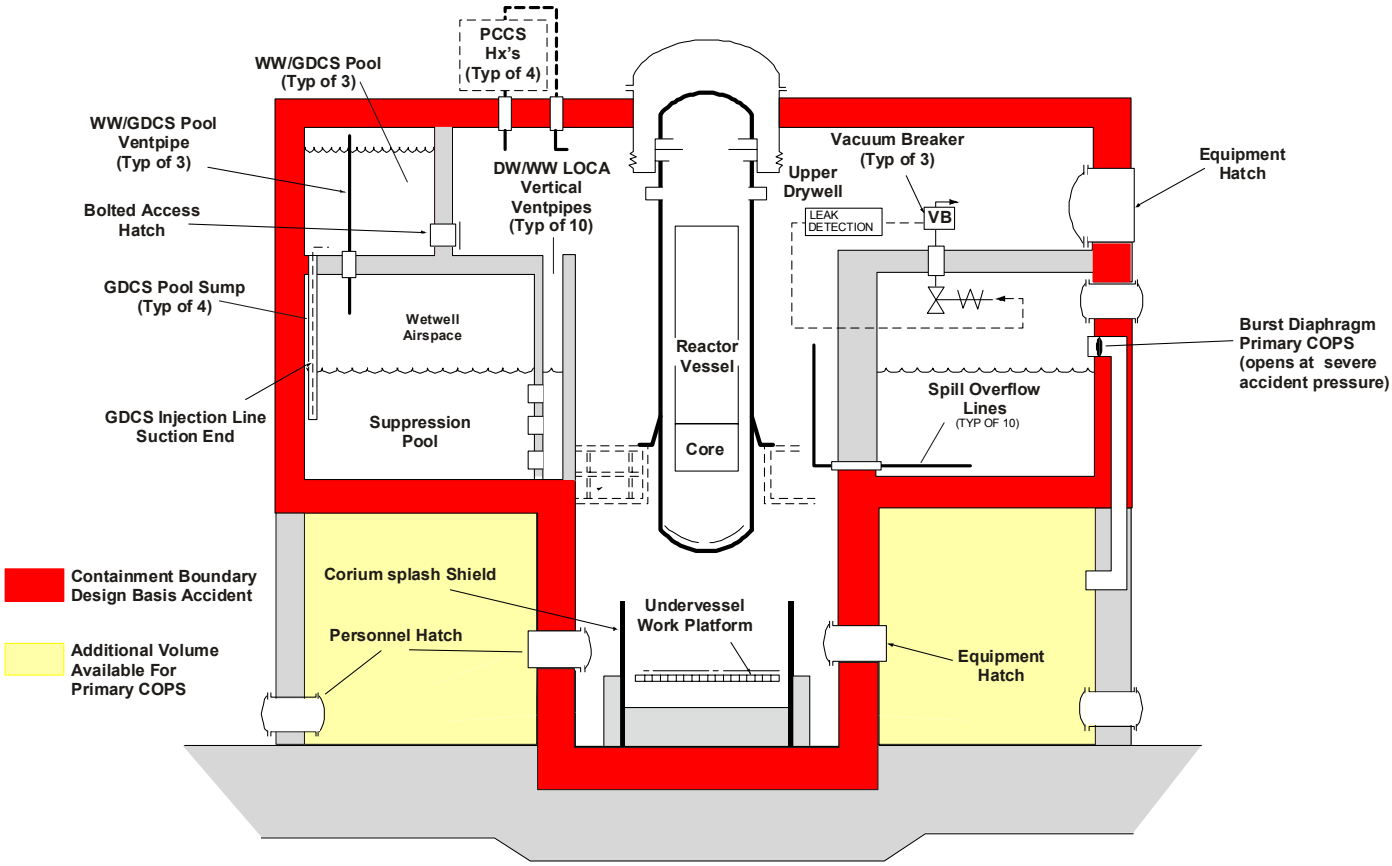

Figure 5.1-2 ESBWR Containment Features

The drywell top slab has a circular opening over the RPV, for access into the RPV for refueling and servicing. This opening is covered with a removable steel head (drywell head), which forms part of the containment boundary. There is a drywell bulkhead that connects the RPV flange to the drywell top slab to provide a seal between the upper drywell and the reactor well when the drywell head is removed.

Penetrations through the PCCV for the drywell head, equipment hatches, personnel locks, piping, electrical and instrumentation lines are provided with seals and leaktight connections. The drywell walls are covered with a 6 mm carbon steel liner, which is suitably coated to prevent corrosion.

An equipment hatch for removal of equipment during maintenance and an air lock for entry of personnel are provided in both the lower and upper drywell. These access openings are sealed under normal plant operation and are opened when the plant is shut down for refueling and/or maintenance.

5.1.16.2 Suppression Chamber

The suppression chamber is comprised of a gas volume and suppression pool water volume. The suppression chamber is raised off of the basemat so that the suppression pool water level is above the top of the RPV core. The suppression chamber is connected to the upper drywell by a vent system comprising ten vertical/horizontal vent modules built into the vent wall, which separates the suppression chamber and the drywell. Each module consists of a vertical flow channel, 1.2 m diameter, with three horizontal vent pipes, 0.700 mm diameter, extending into the suppression pool water. The suppression chamber boundary is the annular region between the vent wall, on the inside, and the cylindrical containment wall, on the outside, and is bounded above by the drywell diaphragm floor, on the top, and the suppression pool floor slab, on the bottom. All normally wetted surfaces of the suppression chamber are lined with 6 mm stainless steel and the nonwetted portions are lined with 6 mm carbon steel with stainless steel cladding. To inhibit corrosion, the carbon steel liner shall be provided with stainless steel cladding in the non wetted portion of the suppression.

5.1.16.3 Internal Structures

The major containment internal structures consist of the diaphragm floor (D/F) slab (separating the drywell and suppression chamber), ventwall (VW), GDCS pool walls, drywell equipment and pipe support structure (DEPSS), reactor shield wall (RSW), RPV support structure and the CRD removal platform support structure. These structures are shown in the containment arrangement drawings in Appendix B. The containment internal structures are constructed of structural steel.

- Diaphragm Floor (D/F) Slab - The D/F slab acts as a barrier between the upper drywell and the suppression chamber. The D/F slab is supported on the RCCV wall at its outer periphery and on the ventwall at its inner periphery. The D/F slab is made of carbon steel plates placed 0.6 m apart, top and bottom, with vertical plates in between, both in a radial and circumferential direction and filled with concrete. The radial plates are 1.6 m deep and project down 1.0 m below the 0.6m thick floor. The concrete fill provides overall rigidity to the entire system as well as distributing the loads between the top and bottom plates. The radial plate, with a flange plate at the bottom, forms the support beam to the floor system.

- Ventwall (VW) Structure - The VW structure is made up of two concentric carbon steel cylinders connected together by vertical web plates. The VW structure is anchored at the bottom into the RPV pedestal and is restrained at the top by the diaphragm floor at elevation 17500. The cylindrical annulus of the VW carries ten vent pipes and 12 SRVDLs with sleeves, from the drywell into the suppression pool. The space in the cylindrical annulus is filled with concrete. The wetted surface of the inner cylinder is covered with stainless steel cladding to prevent corrosion. The nonwetted surface is covered with stainless steel cladding on a carbon steel liner.

- GDCS Pool Walls - There are three GDCS pools supported on top of the diaphragm floor. The pools, on the outside, are contained by the RCCV wall and, on the inside, by walls made of structural steel. The GDCS pool walls are made of stainless steel plates or

carbon steel plates lined with stainless steel cladding and backed up with vertical and horizontal steel structural framing system. The inner walls are connected to the drywell top slab to form a seal that isolates the GDCS pool from the drywell. The GDCS pool area is connected to the suppression chamber via a vent pipe extending from the suppression chamber into the air gap above the water.

- Drywell Equipment and Pipe Support Structure (DEPSS) - The DEPSS consists of various structural components, located in the upper drywell, such as beams and columns that must resist torsion and biaxial bending. The beams span between the reactor shield wall and the vertical support columns, which are anchored to the diaphragm floor. The DEPSS provides support for piping, mechanical equipment, electrical equipment, and general access platforms and stairs. To provide a stiff supporting system to the piping and equipment, the DEPSS will be designed to meet a fundamental frequency minimum of 33 Hz. There are two basic platform elevations to provide access to the piping and equipment in the upper drywell.

- Reactor Shield Wall (RSW) - The RSW is supported by the RPV support structure and extends up close to the drywell top slab. The opening between the RSW and the drywell top slab provides the vent pathway necessary to limit pressurization of the annulus in the unlikely event of a high energy pipe rupture inside the annulus region. The function of the RSW is to attenuate radiation emanating from the RPV. In addition, the RSW provides structural support for the RPV stabilizer, the RPV insulation and the DEPSS. Openings are provided in the shield wall to permit the routing of necessary piping to the RPV and to permit inservice inspection of the RPV and piping. The shield wall is made of structural steel and is shaped as a right cylinder. The plate thickness is 160 mm

- RPV Support Structure - The RPV support structure is located at the junction of RPV pedestal, suppression chamber floor slab and the VW structure. This structure is made of structural steel that provides support for the RPV sliding block support, as well as the RSW. The area between the RPV sliding block supports provides a vent path between the upper and lower drywell.

- CRD Removal Platform Support Structure - The CRD removal platform support structure provides the support for the platform used to remove the control rod drives from the under side of the RPV. The support structure is made of structural steel and is connected to the RPV pedestal. The steel structure is of a box type construction to minimize the lower drywell volume in order to minimize the amount of GDCS makeup volume required to fill the lower drywell.

Refer to Section 5.1.2 for a detailed discussion of the following containment subjects:

- design bases
- configuration and special features
- safety evaluation
- testing and inspection requirements

- instrumentation requirements

5.1.17 Containment Drawings

Appendix B provides the arrangement drawings for the containment.

5.1.18 Containment Overpressure Protection System (COPS)

If an accident were to occur that proceeds beyond the design basis accident (DBA) scenario, the containment could reach higher pressures than those postulated for the DBA. In this highly unlikely event, the containment overprssure protection system (COPS) could activate and in effect add volume to the containment thereby reducing the resulting accident pressure.

Refer to Figure 5.1-2. At the outer wall of the containment structural boundary are a number of ducts leading from the suppression pool air volume (above the water level) to the air volume of the rooms located directly below. The ducts are normally sealed by a rupture disc designed to rupture at pressures higher than the design pressure of the containment. The rupture disc pressure setting would be approximately twice the design pressure of the containment but still less than the pressure at which the containment would fail.

5.1.19 Maintainability Considerations Taken in Containment Layout

Upper Drywell - The upper drywell is provided with one hatch for access into the upper drywell. This equipment hatch, at elevation 17,500 mm , has a single cover that can be removed to allow an opening diameter of about 2.4 meters.

The major equipment that requires maintainability in this upper drywell area are the main steam isolation valves (MSIVs), depressurization valves (DPVs), safety/relief valves (SRVs), feedwater check valves, and the upper drywell fan-cooler units of the Drywell Cooling System (DCS System). The layout of the upper drywell was made so that the movement of all major pieces of equipment can be moved to the equipment hatch, with adequate clearance to other equipment and structures during their removal. Monorails, with movable hoists, are provide on the ceiling to access all of the major equipment. The monorail system facilitates the movement of the equipment to the equipment hatch. The equipment is then transported through the equipment hatch and placed in work areas that have been provided immediately outside the hatch.

The upper drywell has two main platforms to access the equipment. The lower platform provides access to the major equipment, especially for removal. This platform extends over the full drywell area , being interrupted mainly only where the main steam and feedwater lines are routed.. The upper platform provides access to the services to the major equipment (i.e., electrical, pneumatic, equipment removal) and less restricted access around the drywell.

The annulus between the shield wall and the vent wall is accessed by two vertical stairways from the upper drywell. These stairways lead to platforms located at the respective elevations of the valving located in the annulus:

- GDCS System squib, check, and manual block valves;
- RWCU/SDCS System's shutdown cooling outlet line manual block valve; and
- Isolation Condenser System's motor-operated and pneumatic-operated drain valves.

Shielding in this area for maintenance and inspection is provided by the shield wall. The exposure dose rate level was determined for this region during the ESBWR design and was found to be within the industry allowables for personnel undertaking valve servicing and maintenance tasks.

Lower Drywell - The lower drywell is provided with two hatches for access into the drywell. One hatch is designated as the equipment hatch and the other a personnel hatch. The equipment hatch, at elevation -6400 mm, has a single cover that can be removed to allow an opening diameter of 2.4 meters. This hatch cover is located inside of the pedestal and when removed is moved horizontally and laterally to the side, via hoist located on a monorail mounted overhead.

The primary equipment requiring maintenance and removal from the lower drywell are the FMCRDs. The FMCRDs are removed from the RPV via the CRD removal platform. The drives are transported out of the containment via a cart that exits through the equipment hatch, to a maintenance room that is provided at this elevation.

The personnel hatch, at elevation -6400 mm, is an air lock with two doors that are interlocked, to prevent opening both doors at the same time when the plant is in operation. During refueling, both of these doors are open to allow easy access into the drywell for outage maintenance.

Suppression Chamber - The suppression chamber air space is provided with an inner and outer catwalk, suspended over the suppression pool, that allows 360º access. Access is provided, at elevation 13,570 mm, via an equipment hatch. The catwalk is used to provide access to components such as; SRVDL quenchers, vacuum breaker isolation valves, and passive autocatalytic recombiners.

5.2 Flammability Control System

5.2.1 Description and Functioning of System

The Flammability Control System (FCS) is an Engineered Safety Feature (ESF) system whose function is to limit the buildup of gaseous volumetric concentrations of hydrogen and oxygen within any and all containment regions to levels well below mixture concentrations at which a potentially significant high energy release could occur. Combustible gas control aims to avoid exceeding flammability limits according to the requirements of 10CFR50.44. [10CFR50.44 focuses on the control of hydrogen, specifying the hydrogen concentration limit under design basis accidents as 4 vol %, and the hydrogen concentration limit under severe accidents as 10 vol %.] By preventing the possibility for significant high energy releases from developing which could cause a transient pressure loading on the structure, the nuclear plant designer can avoid having to design the containment structure to withstand combined loading such as:

- the pressure loading from steam released from the reactor under a postulated loss-of-coolant accident (LOCA) together with
- a short-term (5 to several hundred seconds) local and/or global pressure loading which may reach a peak pressure of anywhere from ~ 10 to 300 kPa depending on the conditions assumed.

Avoiding such high energy releases assures that equipment needed to provide safe shutdown capability for the Nuclear Steam Supply System (NSSS System) and other equipment needed to prevent the release of radioactive substances from the containment following an accident condition will not be impaired.

5.2.1.1 Background for Discussion on Flammability Control

For the purposes of this report, the term flammability control is used to mean the prevention of a flammable mixture from developing. In turn, the definition for a flammable mixture is: any gaseous mixture in which at least two of the components of the mixture are reactive and in which the concentration of the limiting constituent among these reactive components for (a) the particular state conditions, (b) the particular turbulence conditions, and (c) the particular stratification conditions of the mixture, is high enough to allow a flame to propagate a specified minimum distance in at least one direction within the mixture, regardless of how the flame was produced. In general this specified minimum distance could be understood to be from a few tens of centimeters on up. The term flammability limit is used to mean a line drawn on a suitable plot of multi-component gas mixture conditions intended to discriminate regions, on this specific plot that represent flammable mixtures from adjacent regions that represent nonflammable mixtures. Often, the term flammability limit becomes the specification of the necessary minimum concentration of the limiting reactive constituent within the mixture to achieve a condition of a flammable mixture, given an assumed overabundance in that mixture of the other reactive constituent.

Without effective flammability control, flammable mixtures can develop within the containment of certain nuclear power reactors under certain post-accident conditions, depending

on accident scenario and accident severity. For example, absent effective flammability control, the ESBWR pressure suppression containment could develop flammable mixtures, in time, as a result of the creation and release into containment spaces of gaseous hydrogen and gaseous oxygen resulting from radiolysis produced by the core. If the postulated accident scenario involves some fuel rod failures and subsequent release of fission products to regions beyond the core, such as into the post-accident water pool established in the lower drywell, or into the suppression pool, radiolysis processes then produce and release gaseous hydrogen and oxygen directly into the airspaces above these pools. Other on-going post-accident containment processes can then transport these reactive constituents to other containment spaces and possibly concentrate them in the process. So to achieve effective flammability control in ESBWR, the FCS designer needs to examine each of the different in-containment regions for the possibility of either hydrogen pocketing or hydrogen concentrating processes that could result in flammable mixtures following a postulated accident to determine whether localized FCS countermeasures are needed.

The ESBWR employs two approaches, in combination, to achieve its aims in flammability control. The first approach is to inert the containment with nitrogen. This approach is used to address the short-term threat of a flammable mixture developing as a result of a postulated severe accident i.e., degraded core accidents. In these postulated accidents, high amounts of fuel rod cladding becomes uncovered by water for several minutes and as a result becomes heated to very high temperatures and undergoes a metal-water reaction in which hydrogen is produced and heat is released. If 100% of the active fuel rod cladding within the core were to undergo this metal-water reaction to completion, a total volume of hydrogen gas would be created that is approximately two times the amount of the inerted gas originally filling the containment during power generation operations. Degraded-core accident scenarios span a range of severity. At the lower end essentially zero percent of the cladding is reacted and out to the far end of the scenario spectrum very high percentage (~100%) of the cladding is reacted.

Perfect inerting, i.e. a pre-accident condition of 100% nitrogen and 0% oxygen, is not needed to achieve short-term flammability control in ESBWR. This is because in a three-component gas mixture comprised of nitrogen, hydrogen, and oxygen, in which the oxygen concentrations are low and therefore oxygen is the limiting constituent, the flammability limit for oxygen is nominally around 5% . This means, that if the initial inerted containment atmosphere is predominately nitrogen but still has small percentages (3 or 4%) of oxygen, the scenario which involves hydrogen additions into this inerted atmosphere will not cause the mixture to become flammable irrespective of the amount of hydrogen added. This allows the containment to be inerted by using economical volumes of nearly-pure nitrogen, i.e. stripped of oxygen except for a fraction of a percent of residual oxygen, to sweep out the air present when the containment is isolated after an outage. Only about two and one-half air-change outs are needed to reduce the containment oxygen down to acceptable levels. The ESBWR containment designer might use a 3% target limit for containment inerting. This would provide a nominal 2 percentage point margin to the 5% oxygen flammability limit, to account for such effects as instrumentation system inaccuracy, and to give some time (ten to twenty hours, for example) for a FCS to come into operation and be fully effective in preventing further increases in concentration beyond such point in time.

If steam were to replace the nitrogen as the non-reactive constituent in the three-component gas mixture mentioned above, data suggests that the oxygen-component flammability limit would be even a little higher than the 5%. This is because nitrogen is a diatomic gas, whereas steam is a triatomic gas, and it takes more energy to propagate a flame the specified minimum distance across the triatomic non-reactive component type mixture, than across the diatomic non-reactive component type mixture.

In an oxygen-rich mixture (such as ordinary air), hydrogen becomes the limiting constituent, and in this case the flammability limit for hydrogen is generally taken at about 4 vol %.

While the above discussion deals with the short-term requirements for flammability control, the long-term conditions inside containment spaces following certain accidents must also be considered. Long-term flammability control needs exists because of ESBWR's basic plant design concept in which passive-only systems are used for ESF functions.

Given a hypothetical loss-of-coolant accident (LOCA), the design rules by which adequacy of the FCS is currently judged, incorporate the assumption that a small amount of fuel cladding material will undergo metal-water reaction. This amount of cladding is typically about 0.73% of the total fuel rod clad material within the active core region, and the hydrogen so generated is assumed to be emitted from the core basically simultaneously with the reactor depressurization ensuing from the LOCA event.

The next design rule assumes that certain portions of certain fission product species are released from the fuel. These released fission products are assumed to be transported into the post-accident lower drywell pool, or the suppression pool, or both, whichever assumption is worst-case. The balance of the fission products is assumed to remain inside the fuel rods. Gamma radiation emitted by these fission products will then either strike a water molecule, producing hydrogen in a process known as radiolysis, or will strike another solid material such as an adjacent fuel rod or some structural material. Calculations are done to determine the various fractions and proportions by which fission product radiation produces a radiolytic reaction. The net result is a determination of the total formation rate of hydrogen and oxygen from all radiolysis sites and sources.

In the early hours following a LOCA, radiolysis will typically produce approximately 0.5 kg-moles of hydrogen per hour and about 0.25 kg-moles of oxygen per hour. The pre-accident conditions inside the containment (assuming a 3% oxygen concentration in the inerted atmosphere inside the containment) contains 380 kg-moles of nitrogen, 0.0 kg-moles of hydrogen, and 11.7 kg-moles of oxygen. There is also some water vapor, but we can ignore this small component

In the first few minutes following the LOCA, the atmosphere in the suppression chamber airspace rapidly enriches with water vapor due to the surface of the suppression pool becoming quite warm. This water vapor dilutes the initial oxygen concentration from its starting level at 3 vol %, and within 30 minutes post-LOCA, the oxygen concentration has decreased to about 2.4 vol %. The terms "dry-basis vol % (DB%)" or "wet-basis vol % (WB%)" will be used as appropriate, to distinguish whether we are speaking of a three-component dry mixture in which

water vapor has negligible representation, or whether in substitution to some of the nitrogen as the non-reactive component there is also a replacement amount of water vapor.

Although this post-LOCA radiolysis rate decreases with time, without flammability control, in about a day following the accident, the level of oxygen in the wetwell airspace will enrich back to become slightly higher than 3.7 WB% and the level of hydrogen will be about 4.2 WB%. Toward the end of the 72-hour period, oxygen levels would be about 5.5 WB%, and hydrogen levels would be about 8.0 WB%. If there were some containment space which had the same nitrogen-oxygen-hydrogen proportions but were free of water vapor, the above 72-hour concentrations would correspond to approximately 10.0 DB% for hydrogen and 6.9 DB% for oxygen. So it can be seen that, lacking a FCS, flammability conditions may develop within portions of the containment in the general time frame of between 1 to 3 days following a postulated accident.

The FCS designer is also concerned with another property of gas mixtures with reactive constituents and that is the matter of detonability. A detonation is a condition where a flame front proceeds at supersonic speeds through the mixture. The pressures generated from a detonation can be several times as high as would occur in a simple reaction involving mixtures whose limiting constituent is present only in concentrations falling just-above the flammability limit concentration. A limit line called the detonability limit can generally be drawn on the same plot used to define the flammability limit. The detonability limit is higher with respect to the limiting constituent's concentration percentage than the flammability limit.

The size of the separation between flammability limit and detonability limit, in terms of DB% of the limiting constituent, is studied by the FCS designer in order that a good engineering judgment can be made as to the size of design margin desired for both the FCS and the containment structure. In cases where the detonability limit is only a small amount higher than the flammability limit that applies to a given mixture, the designer may include greater margins to avoid approaching the flammability limit, thereby providing increased assurance that no detonation can occur.

The conclusion to the above discussion is that a flammability control system of some type is needed by a passive-type containment to prevent flammable, or potentially flammable, conditions from developing over the long-term following a LOCA.

5.2.1.2 Detailed FCS System Description

The ESBWR FCS is designed to limit the concentrations of oxygen in a potentially hydrogen-rich post-accident containment atmosphere, as well as limit the concentrations of hydrogen in a potentially oxygen-rich post-accident containment atmosphere, by controllably recombining these gaseous constituents within devices called Passive Autocatalytic Recombiners (PARs) that are distributed at stations within various spaces and subcompartments of the containment.

The FCS is completely passive, in that it requires no auxiliary power, no auxiliary systems support, and no operator actions. The recombination process within the PAR is self-starting (autocatalytic) once minimal mixture concentrations are present in the gas volume surrounding

the device, and once sufficient time has elapsed for any pre-condition of wetness, which may have been produced or introduced by the disturbances (jets, sprays, pool-swells and the like) that may be present at the front end of any accident, to have subsided.

The PARs are designed for long term continuous operation for the duration of post-accident hydrogen/oxygen generation. PAR initiation is inherently automatic, requiring no operator action for 72 hours following an accident. All PAR components are designed and qualified to withstand adverse environmental conditions resulting from a LOCA for a duration of 100 days.

A typical PAR (see Figure 5.5-1) is a device approximately 1.0 m wide x 1.0 m long x 0.5 m high. Within the lower portion of the PAR are assembled two banks of flat, rectangular cartridges. The banks sit side-by-side with each bank containing about 44 cartridges and occupying half the area of the bottom portion of the PAR, i.e. an area approximately 1.0 m long x 0.5 m wide. These cartridges have rough dimensions of 440 mm long x 200 mm wide x 10 mm thick. The cartridges within a given bank are positioned on-edge, and are separated from each other by a spacing of approximately 10 mm, to create a set of vertically oriented slot-type flow channels within the bank. A box-shroud made of stainless steel sheet metal is fixed around the lateral sides of the PAR. This open-top, open-bottom, box carries a number of internal struts allowing the cartridges to be fixed into proper position. The sheet-metal box sides are continued above the elevation where the cartridges and their vertical flow-channels end, to provide a chimney that assists in developing requisite gas through-flow velocities when the PAR is undergoing its recombination of hydrogen and oxygen.

The cartridges, in turn, are packed with tiny hydrophobic palladium-coated aluminum oxide spheres serving as catalyst pellets. The spheres have diameters ranging from 2.4 to 4 mm. The sintering of the aluminum oxide gives a very porous ceramic structure with a high fraction of open porosity. The palladium coating process impregnates not just the spherical outer surface material of the sphere, but also the surface material of all the porosities within the "shell-layer-depth" reached during the impregnation process. Thus, the total effective catalytic surface area presented to reactive gases for recombination is many times greater than the simple aggregate surface area of the pellet spheres themselves. According to manufacturer information, the latter surface area is a factor of 142 times the PAR face inlet flow area which is nominally 1 m^2. When the ceramic spheres are impregnated to a depth-layer of 500 micrometers, the collective recombination-area presented in the pellet charge in a standard-size PAR totals to more than $1x10^6$ m^2.

The pellets are held in place by thin flat mesh screens on the two largest faces of the cartridge and bounded at the four peripheral edges by sheet-metal members. In such a PAR, a total of approximately 30 kg of pellet-charge is present and the PAR itself weighs approximately 170 kg

A wide number of support means are available to suspend or hang the PAR within the volume to be protected. Bracing and supports will be designed to meet Seismic Category I qualification.

The recombination of molecular hydrogen and oxygen produces water vapor (steam). The recombination process is exothermic, so the recombination process heats the internals elements

comprising the PAR as well as heating the through-flowing gas stream. Temperature rises from a few tens to a few hundreds of degrees can be developed between the entrance gas temperature and exit gas temperature. The hot gases thus formed are expelled from the upper part of the PAR via buoyancy forces acting to produce a natural circulation through-flow involving unreacted mixture entering at the bottom and thoroughly-reacted gaseous flow stream leaving from the top.

As the gas stream flows upward through the long slot-type flow channels in the PAR, hydrogen and oxygen molecules rapidly diffuse into the cartridge interiors to be adsorbed, then reacted, at the catalyst surfaces of the pellets. Hot water vapor molecules diffuse outward, to mix with the through-flowing, now-chemically-reacted gas flow stream. Any dust or aerosol particles are borne upward through the flow channels and translate sideways only by the random microturbulence in the flow stream. They do not enter the pellet region and therefore, any inter-pellet passageway or channel plugging is avoided.

Tests show that the recombination process is very effective. For example, the volumetric concentration of the limiting constituent will be below 0.5 WB% at the exit of the flow channels; and the recombination process will proceed once the concentration of the limiting constituent (in this case, taken as hydrogen in an oxygen-abundant gas mixture) attains a 1.0 WB% in the entrance gas mixture. If the pellets have become wetted (despite their hydrophobic characteristic), the recombination process is slowed, at first, but dry-out develops over some initial few hours once the hydrogen level reaches this nominal 1.0 WB% level, and then after this initial dryout period is elapsed the PAR reaches steady-state performance.

The gas flow rate through the PAR will depend on design factors such as the entrance flow area of the device, the height of the chimney, and the concentration of the limiting constituent in the flow stream. The PARs are tested and qualified, and test information is available to enable the FCS designer to decide on how many PARs, and what size PARs (full-size, or half- or quarter-size PAR units) are needed in given containment volumes, to deal with the range of potentially flammable conditions that could develop. At present a number of PAR vendors have qualified their individual product designs to conditions expected for the substantial portion of the atmospheric conditions in the ESBWR containment in which the PARs might be expected to function.

Several properties of the entering gas mixture greatly affect the rate of recombination:

- The PAR hydrogen (or oxygen) depletion rate becomes higher as the concentration of the limiting constituent in the entering gas stream itself becomes higher.
- This depletion rate also becomes higher as the mass density, at fixed concentrations, becomes higher.
- Finally, the depletion rate slows down a little, as the temperature of the entering gas flow becomes higher.

Studies of the effectiveness of PARs in keeping a limiting constituent below a specified limiting condition will be done using computer codes allowing the entire transient time-history

to be investigated. These codes incorporate variable recombination rates provided by the PARs as the conditions within the entering gas flow stream themselves change over time.

In the vicinity surrounding the device, depending on the clearances to both overhead surfaces, underneath surfaces, and bounding-side surfaces, natural quasi-stable convective flow currents (eddies) developed that are processed by the device. These regions of influence of the device can be readily determined, and so the required number of similar devices can be established to assure flammability control for the entire containment. Furthermore, the PARs can be provided with different amounts of catalytic surface and/or entrance flow areas with or without flow-enhancing chimneys and ductwork to give the FCS designer additional flexibility to meet the wide range of space arrangements, variations in structures, equipment, and bounding-surface constraints that may be encountered.

PARs have been applied in conjunction with other flammability control devices, specifically with igniters, in nuclear power plants in Europe and elsewhere where the initial containment atmosphere is not completely inerted. In these cases, the igniters provide a form of controlled, low-energy reactions in containment spaces in which a locally flammable mixture is postulated and in which the consequences of such low-energy releases on safety-related equipment and structures are acceptable. With these igniter-produced controlled-energy burns, high-energy burns that could challenge containment integrity are precluded. A principal disadvantage to using igniters in the ESBWR FCS is that such devices require safety-grade power supplies.

What distinguishes a PAR device in the FCS design from that of the igniters is not only its passive, self-starting performance but also the property that recombination begins when the concentration of the limiting constituent exceeds approximately 0.5%. [A conservative starting value as 1.0% is used in the computer-code transient studies.] The system of PARs distributed throughout the ESBWR containment volume begin to undertake recombination long before containment conditions approach the flammability limit. This is a critically important factor that keeps the average concentration of the limiting constituent in post-accident scenarios well below the flammability limit.

There is an optimum number of PARs for dealing with the flammability threat in any given containment volume. For a specific containment volume, there needs to enough PARs present to keep the build-up of the limiting constituent below the flammability limit (including designer margin) given the transient nature of the arrival and build-up of this reactive constituent within that compartment. The optimum number of PARs also depends on the size of the general circulation atmospheric eddy that can be developed within the geometry of the containment volume that is to be controlled. There should be enough PARs so that after a slow build-up of limiting constituent to some quasi-equilibrium value, further rises in concentration are prevented. With the eventual decrease in the rate of production by radiolysis and other mechanisms, this quasi-equilibrium concentration will then also decrease. More PARs placed in that region can lower this quasi-equilibrium concentration level. However, the PARs also have the side-effect of being exothermic in operation which can have a negative impact on the containment as will be discussed below.

In the case of a degraded-core accident scenario, in which large volumes of hydrogen are created over a short period of time, the hydrogen concentration in a given containment airspace

will increase from zero to a high value. If an excessive number of PARs are present in that airspace, the total recombination rate, moles per hour, can become quite large. There's plenty of oxygen to support this high recombination rate with the post-inerting oxygen level down at 3.0 DB%. The heat produced from the hot gas plumes issuing from the PARs can produce sharp extremes of temperature-stratified gas in the upper levels of that airspace. The amounts of heating can, under certain conditions, be substantially more than the natural cooling processes offered via the presence of colder boundary walls or internal structures and equipment. Concerns such as thermal-induced stresses in structural members, degradation of concrete strength, and the post-accident continued ability of certain in-containment equipment (such as valve operators on valves used for accident-recovery systems) to function can all be made worse by this condition.

Therefore, a balance is needed with enough PARs to deal with the long-term radiolysis that gradually increases both oxygen and hydrogen in the containment airspaces for accidents up to and including the design basis accident, but not so excessive a number of PARs as to lead to undesirable temperature consequences under degraded-core accident scenarios.

Engineering computer codes have been developed to analyze the concentration transients likely to occur under various accident scenarios. These codes allow the FCS designer to change the number of PARs, for example, to study the optimization situation mentioned above. Because airspace temperature stratification, i.e. the layering of hot temperature layers over intermediate temperature layers over cold temperature layers, is expected in the real-world scenarios, some versions of these codes can be quite sophisticated and the experimental data to fully confirm all aspects introduced by the models is not necessarily available for certain unusually configured airspace volumes. Additionally, there can be, over short time periods, an airspace composition stratification where the level of reactive constituents at one layer is different from those at other layers.

The latest formulations for depletion rates, including the latest information on PAR dry-out times are used in these containment transient analyses. GE has found that although the codes employed to date on ESBWR have not yet attempted a modeling as complex as the discussion above on stratification variability suggests, it is possible to do certain bounding case analyses which yield conservative estimates of concentration transients. The results of these codes are studied by the FCS designer as selections are made for the number, the physical sizing, and the vertical elevation placement being specified for the PARs in a given containment volume.

5.2.2 Design Bases

5.2.2.1 Safety Design Bases

- The FCS for ESBWR shall, using appropriately qualified passive autocatalytic recombiners (PARs) in both number and in appropriate positioning throughout the containment airspaces, recombine the reactive gases: hydrogen and oxygen, that enter and/or are created within and/or accumulate within various containment airspaces over the long-term period following a design basis accident, such that:the oxygen concentration is maintained below 4.0 WB% based on bulk uniform mixture concentrations within the subject containment airspace and the maximum temperature within a 72-hour post-LOCA period does not exceed 171° for any drywell airspaces and does not exceed 121°C for any wetwell airspaces.

- The various assumptions contained in US Regulatory Guide 1.3 shall, as a minimum, be assumed as challenge conditions in establishing the subsequent design features required of the FCS in meeting the above concentration and temperature limits specification. Additionally, the maximum allowable oxygen concentration in the subject inerted pre-accident containment airspace shall be taken as 3.0 WB%.

- The FCS shall be classified as an ESF system, and thus shall meet all criteria appropriate to systems so classified. The PARs shall be classified as passive components, and thus are not required to be designed as subject to single active failure (SAF) rules. The PARs shall be designated as Seismic Category 1, Quality Group B, Quality Assurance Requirement 2, components.

- The FCS components including their supports shall be protected, without loss of function, against all recognized design basis LOCA dynamic effects including effects of missiles, steam jets, pipe whips, etc.

5.2.2.2 Plant Investment Protection Design Bases

- For degraded core events up to a severity that includes 100% of the active fuel rod cladding undergoing metal-water reaction, the FCS shall recombine the reactive gases: hydrogen and oxygen that enter and accumulate within various containment airspaces over the long-term period following the postulated accident, such that:

  1. The oxygen concentration is maintained below 4.0 WB% based on bulk uniform mixture concentrations within the subject containment airspace; and
  2. The maximum temperature within a 72-hour post-LOCA period does not exceed [to be determined] for any drywell airspaces, and does not exceed [to be determined] for any wetwell airspaces.

  These specifications assure there is no possibility of developing hydrogen burns that could create loads to the containment in excess of the design limits of 10CFR50.34(f) for this postulated extent of metal-water reaction. [10CFR50.34(f), "Additional TMI-Related Requirements," subparagraph 50.34.(f)(1)(xii)]

- The PARs shall have minimal loss of catalytic efficiency under the foreseeable threat spectrum involving the generation of common catalytic poisons released, resulting, or generated from and during a degraded core accident including its subsequent unfolding over time.

5.2.3 Configuration and Special Features

For ESBWR, the number of full-size-equivalent PARs installed in the wetwell airspace is currently specified at three units. This is higher than the number earlier planned for SBWR because ESBWR has almost twice the core rated power level, and the radiolytic production rate for oxygen and hydrogen are considered to be essentially linearly proportional with power level. Also, the Tech Spec level of oxygen in the pre-inerted ESBWR containment atmosphere has been specified at a lower value, 3.0 DB% max for ESBWR vs. 4.0 DB% max for SBWR. This means there is greater time post-accident for these ESBWR PARs to recombine the reactive constituents before peak levels, and therefore the closest approach to flammability limits, are reached. In ESBWR, the design goal is to prevent wetwell oxygen concentrations from exceeding 4.0 WB% at any time, even well beyond 72 hours, following a design basis accident. An additional design goal is to keep the wetwell airspace temperature, on a bulk airspace temperature basis, below the temperature limit established for the containment structural design, namely, 121°C anytime prior to 72 hours post-accident. Preliminary studies suggest this temperature limit may be more difficult to achieve than the concentration limit.

These three PARs are tentatively specified as being half-size units, distributed uniformly around the wetwell airspace. While each PAR itself is planned to be located at an elevation high in the wetwell to avoid pool swell impact loads, the sheet-metal box sides will need to be extended downward to approach within approximately 1.5 m above the maximum post-LOCA "long-term" suppression pool surface level. This feature is added to ensure that the airspace layer lying just above the pool surface will be incorporated in the large eddy that forms and circulates through the PAR.

ESBWR containment, at 33.5 m nominal ID, has somewhat larger total containment airspace volume than SBWR with its 31.5 m nominal ID, and so this provides greater moles of both nitrogen and oxygen present in the ESBWR wetwell shortly after the initial blowdown sweeps-over all this inerted atmosphere out of the drywell. The effect of these greater initial moles with all other things being equal is that it will take a longer time period for the concentration buildup in the ESBWR wetwell to reach a given flammability limit or design goal limit condition.

The post-accident scenario for ESBWR also envisions a higher partial pressure of water vapor within the wetwell airspace, at all times post-LOCA, than might have been the case for SBWR. This is because a greater amount of RPV coolant and blowdown decay energy is being deposited into a suppression pool, which is only marginally larger than for SBWR. The post-blowdown suppression pool surface temperature is therefore going to be higher for ESBWR than for SBWR. This causes the higher partial pressure for water vapor. ESBWR deals with this higher partial pressure by its new design of wetwell airspace in which the GDCS pool volume is topologically made part of the wetwell airspace, thus reducing the peak post-LOCA pressures otherwise developed in the wetwell airspace. ESBWR FCS includes additional quarter-sized PARs in each GDCS Pool.

Within the drywell the number of equivalent full-size PARs is specified to be the same as for SBWR, namely, two units. These are also provided in the form of quarter-size PARs selectively located, among others, in regions where condensation may be occurring on drywell surfaces. Six of these eight (quarter-size) units are located in the upper drywell region and two are located in the lower drywell.

The FCS is expected to provide no impact whatsoever on plant availability or forced outage rate. Catalytic recombiners are constructed of materials whose physical properties do not change significantly under long-term exposure to operating temperature and radiation environments in the containment. Because PARs have no significant aging mechanisms that cannot be tracked by in-service inspections, they are expected to have a qualified service life equal to the life of the plant, that is, 60 years.

5.2.4 System Operation

Normal Plant Operation

During normal power generation operations, each PAR is inactive inasmuch as only one (oxygen) of the two necessary reactive constituents is present in measurable quantities in the containment atmosphere. To the extent that trace levels of hydrogen appear, over time, in the containment atmosphere as a consequence of certain corrosion mechanisms that can evolve hydrogen, or as a consequence of trace steam leakages which may contain a small (ppm range) hydrogen component, or as a consequence of radiolysis action on airborne humidity from the low-level gamma field existing in the drywell, the action of the PARs is expected to be capable (despite hydrogen concentration levels being below the initiating concentration assumed when doing DBA-type calculations) of maintaining the hydrogen concentration within the containment airspace at levels below which the Containment Monitoring System's hydrogen-measurement instrumentation can even measure.

Plant Shutdown Operation

During portions of reactor shutdown the FCS remains available, although its action to maintain the oxygen level within the values stated above is rendered ineffective once the drywell and wetwell are de-inerted.

FCS Operation: Safety-Related Mission

The PARs passively begin the controlled catalytic recombination of hydrogen and oxygen upon exposure to these gases, even at low environmental temperatures. They exist in sufficient numbers and regions to keep the oxygen concentration within containment spaces below flammability limits irrespective of the amount of hydrogen released during any credible accident scenario. They function for concentrations of the limiting constituent that are well below the flammability limit, and throughout a range of ongoing increases in process gas mixture concentrations well into concentration ranges for mixtures that could, if reached and given a random ignition source, produce detonations.

The PARs generate substantial convection currents that result in perpetuating the inflow of process gas mixture so long as concentrations of the limiting constituent do not drop below levels that self-extinguish the recombination process (which levels are probably somewhat below 0.6 WB%).

5.2.5 Safety Evaluation

The PARs and their effluent gas stream have not shown themselves to be a prospective "initiator" of flames even when step-changes in conditions to above-flammability-limit conditions are introduced in instrumented test vessels being operated to obtain or define flammability limits.

Qualification tests completed to date have shown the PARs to be particularly resistant to catalyst poisoning prospectively resulting from elements (halogens), compounds, or aerosols released during fires or severe accident events. The containment design specification will call for use of fire-resistant polyethylene-type insulated cable, in lieu of fire-resistant halogenated-compound cable insulation, to further minimize the prospect for any loss of catalyst potency during fires or severe accidents.

The PARs will be qualified to show full capability to withstand the peak (internal, exothermic) heating rate developed during the severe accident scenario when hydrogen is rapidly injected into a pre-accident inerted containment whose post-accident, pressurized atmosphere includes a certain initial oxygen concentration. These qualification tests would be expected to cover the upper end of the range of concentrations of the limiting constituent (oxygen), the upper end of the range of process gas mass density, and both the upper end and lower end of the range of entering process gas temperatures, in worst combinations thereof, to assure that the PARs do not become physically degraded by the peak heat releases occurring at maximum encountered rates of recombinant reaction.

5.2.6 Testing and Inspection Requirements

Periodic visual inspections of the catalyst surfaces will be made during each refueling outage. If dust or other contaminant is observed, the catalyst cartridges or plates can be cleaned off with a vacuum or air hose. In addition, periodic surveillance tests of catalyst performance will be conducted. A representative cartridge or plate, for example, will be removed from some PARs and taken out of the containment during the refueling outage. (These will be replaced by new or renewed elements.) The removed specimens will be placed in a standard laboratory test apparatus and a controlled flow of air containing a known quantity of hydrogen will be passed through the specimen container. The measured temperature increase of the exiting gas after a specified time from start of gas flow would indicate whether any degradation of catalytic potency, in comparison with baseline tests of new specimens, has occurred.

5.2.7 Instrumentation Requirements

The Containment Monitoring System (CMS) provides containment oxygen and hydrogen level monitoring during normal plant operation as well as during post-accident conditions.

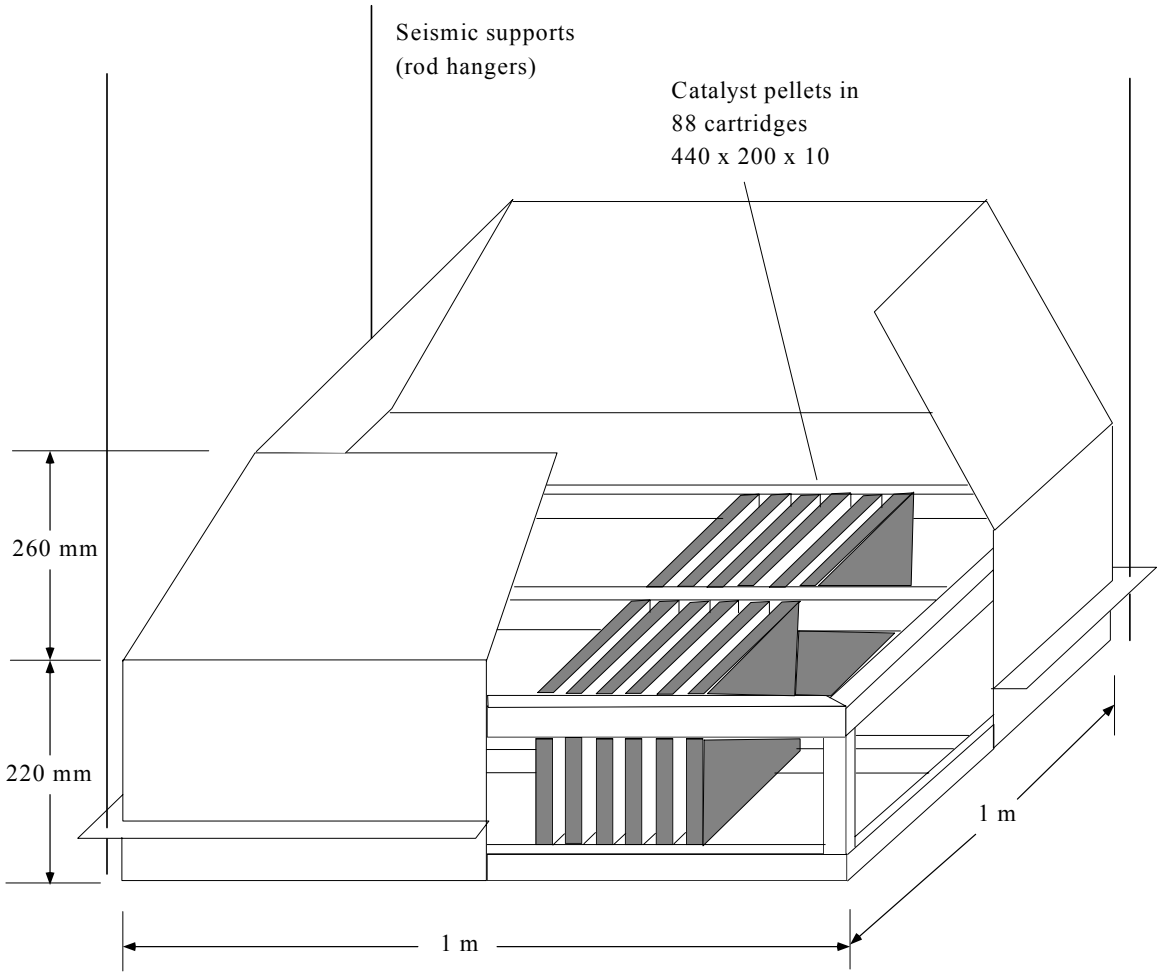

Figure 5.2-1 Typical Passive Autocatalytic Recombiner (PAR)

5.3 Drywell Cooling System

5.3.1 Description and Functioning of System

The Drywell Cooling System (DCS) provides conditioned air/nitrogen to the drywell head area, the upper drywell, the lower drywell, and the shield wall annulus region of the upper drywell during normal plant operation, during operational transients, and during plant shutdowns. Conditioned air is air/nitrogen that has been processed to establish proper temperature and relative humidity. It is needed to provide a suitable atmospheric environment for the equipment and instrument/control components in the containment. Conditioned air also ensures that temperatures in the structural concrete immediately outboard of the containment liner remain within limits that ensure the integrity of the concrete.

Ample and effective circulation, cooling and mixing of drywell atmosphere is also vital in the conduct of primary containment vessel (PCV) integrated leak rate testing to provide a near-uniform temperature distribution. Lastly, by its collection and routing to measurement station components of the Leak Detection and Isolation System (LD&IS) of water vapor removed from the process gas mixture, the DCS aids in early detection of abnormal conditions, which may be indicative of freshly developing out leakages from the reactor coolant pressure boundary.

During normal plant operation, the containment atmosphere is nitrogen-inerted; that is, it has a proportion of equal or greater than 97.0 dry vol. percent nitrogen and less than 3.0 dry vol. percent oxygen. During plant shutdowns when the containment is opened and personnel are working inside, air is supplied via the Reactor Building HVAC System (RBHVACS) to establish safe breathing levels at nominal atmospheric air proportions of gaseous constituents. In this section, the term “air” is used interchangeably to mean air or nitrogen. Since the density, kinematic viscosity, and specific heat values of air and nitrogen are approximately the same, equipment selected based on air will perform adequately with either air or nitrogen as the circulating medium.

Key DCS components and design features are shown in the accompanying “ESBWR Drywell Cooling System Schematic Diagram” found in Appendix A.

The ESBWR DCS consists of twin air-processing trains. Each train is configured as a closed loop recirculating air/nitrogen cooling system. No outside air/nitrogen is introduced into the system except during shutdowns when the PCV is opened to allow the access of personnel and equipment. Direct-drive type fan cooling units (FCUs) deliver cooled air/nitrogen via appropriate ductworks-and-dampers to various areas of the upper and lower drywell in the proportions required to meet regional operational environmental limits.

Heat is removed from the process air stream within the FCUs. This heat is in two forms:

- Sensible heat, meaning an air of higher temperature than the coolant being used as the FCU heat removal fluid and

- Latent heat, meaning the heat of evaporation that must be extracted from the water vapor within the process air stream in order to produce condensation of any surplus water vapor present.

These drywell cooling heat loads are transferred to and removed by the Reactor Component Cooling Water System (RCCWS) or the Reactor Building Chilled Water System (RBCWS), which circulate (depending on valve line-up) through the cooling coil assemblies of the FCUs.

Because the physical sizes for the FCUs are fairly large, the FCUs for the upper drywell are located on the diaphragm floor, opposite to where ESBWR's four main steamlines (MSLs) are being routed for penetration into the steam tunnel. The FCUs for the lower drywell are much smaller in size, and are easily located in the lower drywell alongside the structural wall representing the combination reactor support pedestal/lower drywell structural wall.

The DCS for the ESBWR has both higher processing airstream flow rates, and higher heat-removed design duty than that for SBWR. This becomes evident when considering the following.

- ESBWR has four MSLs, compared to just two in SBWR.
- ESBWR has a 7.1 m ID Reactor Pressure Vessel (RPV) compared to the 6.0 m ID RPV of SBWR. The ESBWR RPV is also somewhat taller than SBWR's. Therefore, the ESBWR has a larger surface area through which heat can be transferred to drywell atmosphere.
- ESBWR has 12 Safety-Relief Valves (SRVs), each with associated discharge line piping that runs from the valve down into the drywell/wetwell vent wall, giving higher opportunity for heat transfer from SRVs that may not be completely leaktight.
- ESBWR has one more Isolation Condenser (IC) unit (4 ICs in ESBWR vs. 3 in SBWR) and so has one more active steam supply line that connects from the RPV steam dome region over to guard piping through the drywell roof slab. These IC steam supply lines are also larger: 300A for ESBWR vs. 250 A for SBWR.
- The motors for the fans in the FCUs will be higher-rated, and so additional heat loads from motor windings losses and higher process stream frictional losses both contribute added heat removal duty in ESBWR's DCS compared with the SBWR's.

Nevertheless, engineering calculations show that the basic physical sizes of the FCUs need to increase only modestly, compared to those of SBWR, to handle this increased process duty. The added heat removal capacity is gained principally by adding an additional assembly of plate-type finned cooling coils in each of the FCUs. This increases the overall length of the FCU unit, but does not change its cross-sectional dimensions appreciably. Since ESBWR is designed with a 33.5 m internal diameter for the containment vs. 31.5 m for SBWR, floor space is available to position these larger FCUs into the same generalized assignment location within the upper drywell as in SBWR.

5.3.2 Design Bases

5.3.2.1 Safety Design Bases

The DCS does not perform any plant safety-related function. Failure of the DCS does not compromise any safety-related system or component nor does it prevent safe shutdown of the plant.

5.3.2.2 Plant Investment Protection Design Bases

The plant investment protection design bases for the ESBWR DCS are:

- The DCS shall have sufficient redundancy in all active components such as to preclude any loss of plant availability exceeding 0.2%. This translates to the requirement for twin 100% air-handling loops in both upper and also in lower drywell regions with two 100% fans in each FCU. It also translates to assigning each train to an independent division of RCCWS cooling water.
- The DCS shall be designed with an adequate design margin (not less than 15%) to account for congested space hot spots, degradation of thermal insulation, and aged equipment.
- The DCS shall be designed to operate for an extended time period with RCPB water and/or steam leakage directly into the upper drywell region at rates corresponding to 200% of the Technical Specification limit for the heat duty resulting from the worst-case condition listed below:

  unidentified steam leakage;

  unidentified water leakage;

  identified steam leakage; and

  identified water leakage.

In meeting this requirement, the DCS shall be assumed to have all installed equipment, including connections from the Chilled Water System, if necessary, fully functional and available.

- Condensate from the FCU cooling coil assemblies shall be routed through drainlines containing flow elements, where pipeline flow rates can be measured by the LD&IS, to a discharge within the high conductivity waste sump within the drywell. Condensate collected from the FCUs is considered to be originating from “unidentified” RCPB leakage as opposed to “identified” RCPB leakage collection measurements.

5.3.3 Configuration and Special Features

The DCS is classified as a non-safety-related and Seismic Category II system.

The DCS is designed to perform the following functions during normal plant operation and transient operating conditions through the entire plant operating range, from startup to full load condition through shutdown and refueling:

- Maintain temperature and humidity in the upper and the lower drywell spaces within the specified limits during normal operation;
- Accelerate drywell cooldown during the period from hot reactor shutdown to cold shutdown;
- Aid in complete purging of nitrogen from drywell during shutdown;
- Ensure a thoroughly mixed, uniform containment temperature during the conduct of periodic Integrated Leak Rate Tests;
- Maintain a habitable environment for plant personnel during plant shutdowns for refueling and maintenance; and
- Limit drywell temperature during LOPP.

Specifically, the DCS is designed to maintain the following conditions in the upper and lower drywell during normal and plant shutdown refueling modes of operation:

Drywell Condition	Normal Plant Operation	Plant Shutdown / Refueling
Average dry bulb temperature	57°C	26°C
Maximum temperature of ambient atmosphere in each drywell zone	66°C	
Relative humidity	50% max. nominal	50% average

Each upper drywell and lower drywell FCU has a cooling capacity of 100% of the upper drywell and lower drywell design cooling heat load, respectively, under normal plant operating conditions. Both FCUs normally operate. Each FCU is composed of two assemblies of cooling coils (process flow passing these in series arrangement) and two fans (in parallel arrangement) downstream of the cooling coil assemblies. This arrangement allows the motor windings to operate in the coolest temperature air developed anywhere in the air flow circuit. One of the fans operates while the other is on standby status and will automatically start upon loss of the lead fan.

The fans in each FCU are direct-drive units powered by two-speed (100%/50%) motors. This gives an added range of flexibility to system operation, which facilitates, among other

applications, Integrated Leak Rate Testing (see below) at which time the operating fans are run in the lower-speed mode.

The RCCWS loop A and B piping independently penetrates the containment. The cooling coils of one FCU in the upper drywell and one FCU in the lower drywell are piped in parallel to RCCWS loop A, and the remaining two FCUs are piped in parallel to RCCWS loop B. A continuous flow of cooling water goes to both the FCUs in the upper drywell and both the FCUs in the lower drywell during normal operation. The cooling water flow rates are balanced by manual globe valves in the return water lines. Since drywell cooling is a 100% recirculating airflow system and the cooling load is relatively steady, automatic modulation of cooling water is not required. Upon failure of cooling water to any one of the FCUs, chilled water from the RBCWS is valved into service to provide sufficient heat removal capacity.

Cooled air/nitrogen leaving the FCUs enters a common plenum and is distributed to the various zones in the upper drywell through distribution ducts. Return ducts are not provided; the FCUs draw air/nitrogen directly from the drywell region in which they are located (i.e., upper drywell, or lower drywell, respectively).

Since the design of the ESBWR assumes a site with cooling towers as the main condenser heat load rejection means, there may be times during the summer season where cooling water provided by the RCCWS will not be cold enough to remove design-basis drywell total heat load and still keep all temperatures and humidity conditions within desired ranges. For this reason, the ESBWR DCS features valved cooling water supply connections to the RBCWS in alternative mode to the conventional cooling water supply that is provided by the RCCWS. The operator, after changing valve line-up over to the RBCWS at interconnection points outside the drywell, can then adjust the position of flow control valves in the RBCWS coolant supply into the DCS that now brings much colder water, at selected flow rates, into the cooling coil assemblies in the FCUs. This allows regulation of the outlet air temperatures from the FCUs so as to maintain proper thermal and humidity environments within the drywell.

Material and equipment selections for DCS components is generally based on a 60-year design life, with appropriate provisions for maintenance and replacement of components and for quick replacements of parts that are subject to thermal and radiation environmental degradation. Careful attention is paid in the PVC layout to ensure adequate equipment removal paths and personnel access for replacement and servicing of components. The stainless steel FCU cooling coil assemblies are accessible for cleaning by removal of access doors provided in the ductwork. If necessary, the cooling coil assemblies can be removed altogether for refurbishment. To allow testing and balancing, small (approximately 6.4 mm diameter) holes are drilled on the side of the DCS ductwork at key locations to facilitate making pitot-tube traverse velocity readings. The holes are capped after the testing and balancing is completed.

Low-efficiency air filter sections are provided upstream of the cooling coils sections. These filters are installed and used during post-construction testing in order to protect the cooling coils. After such testing, the air filters are removed since it is not necessary to filter the recirculating air during normal plant operation. If necessary during a refueling outage, temporary air filters can be installed in the filter sections.

5.3.4 System Operation

Normal Plant Operation

During normal plant operating conditions, both FCUs in the upper drywell and both FCUs in the lower drywell are continuously operating. One of the two fans in each FCU is running at full-speed operation, the back-up fan being in standby. Cooling water supply to the cooling coils in the FCUs is from the RCCWS. As described above, cooling water supply can be switched over to the RBCWS whenever RCCWS coolant supply temperatures are insufficient to give good control regulation to drywell environment.

Plant Shutdown/Refueling Operations

During plant shutdown/refueling conditions, one FCU in the upper drywell and one FCU in the lower drywell continuously operate to maintain a habitable environment in the drywell for the plant maintenance operations.

If the drywell has not been opened, then the FCUs are directly supplied by the RBCWS water. Generally, both fans in the single operating FCUs are running.

Once the drywell has been opened for de-inerting and prior to the start of various in-drywell maintenance, servicing, and inspection operations, the cooling water to the FCUs will be switched over to the RBCWS because the RCCWS cold leg temperatures may still be too warm to produce comfortably cool outlet air temperatures from the FCUs. Under some conditions, cooling water flow into the FCUs may be halted altogether. DCS fans in the FCUs mix the return air along with the cooled purge air supplied to the drywell by the RBHVAC System and distribute the air throughout the drywell for temperature control.

Loss of Preferred Power Operation (LOPP)

During a LOPP and as long as there is no LOCA signal, the FCUs are powered by the non-safety-related on-site diesel generators.

Control logic will trip the FCUs during LOCA conditions, because the prospective increase in atmospheric density and containment atmospheric temperatures may raise the temperatures of the motor windings to levels beyond their peak design basis. It is more desirable to preserve the future operational capability of the fan motors, by protectively tripping them off-line during a LOCA, so that the DCS can support early post-LOCA recovery actions, when other systems have begun operation to bring containment conditions back down within more normal operating ranges.

Integrated Leak Rate Test (ILRT) Operation

Integrated leak rate tests of the containment typically must be conducted at a rate of three times per ten years. During such tests, the containment pressure is raised to approximately 75%

of the calculated peak pressure reached during design basis events. The DCS is required to provide a fairly-uniform temperature condition within the drywell during such testing. Volumetric flow rates of 50% of normal are sufficient to achieve this condition. However, these conditions represent an increase in the drywell pressure of approximately 3.2 times the normal operating pressure and thus results in higher air density. The fans in the FCUs would experience a major additional power draw if full-speed operation were required for these conditions. For this reason, the fan-motors selected for the DCS are of the two-speed type. During ILRT and pre-operational test of the PVC, the DCS is operated at a lower fan speed to mix the higher density air in the PVC and to provide the required uniform temperature distribution.

5.3.5 Safety Evaluation

The DCS does not perform any safety-related function. Failure of the DCS does not compromise any safety-related system or component nor does it prevent safe shutdown of the plant.

5.3.6 Testing and Inspection Requirements

The FCU cooling coil assemblies are tested for pressure integrity in conjunction with the RCCWS after the installation is completed. Hydrostatic testing of piping systems is performed at 1.5 times the design pressure, but in no case less then .53 MPa for a minimum of 30 minutes with no indicated leakage. Pneumatic testing may be substituted for the hydrostatic testing in accordance with applicable codes.

Test connections are provided at the FCU discharge supply ducts for verifying calibration of operating controls.

5.3.7 Instrumentation Requirements

Each fan-motor within each FCU can be controlled manually from the main control room (MCR). Indicator lights show the status of each unit. Failure of a FCU with consequent temperature rise in the discharge stream will actuate an alarm in the MCR.

A flow switch is provided in each fan discharge duct at the downstream side of its gravity back draft damper. Failure of a fan will activate the flow switch at a low flow, which will send a signal to automatically start the standby fan. A low flow alarm will also be activated in the MCR upon failure of a fan. Temperature elements are provided in the fan-motors to monitor fan bearing temperature and fan motor winding and bearing temperatures.

Preset volume control dampers, i.e. flow adjusting devices, are provided in the air supply ducts so that regardless of which FCUs are operating, temperature requirements are met. Gravity-type back draft dampers prevent reverse flow through any unit, which is not operating.

The plant Multiplexing System (MUX System) provides the redundant and distributed control and instrumentation data communications network to support the monitoring and control of the DCS and its interfacing plant systems. All multiplexed control signals for the DCS are processed through non-1E remote multiplexer units of the MUX System. The plant Containment

Monitoring System (CMS) provides all the instrumentation and readings of atmospheric conditions within the drywell. Temperature elements are provided to measure the supply and return air/nitrogen temperatures to each FCU. Instrument readouts are located in the MCR.

5.4 Containment Atmospheric Control System (CACS)

5.4.1 Description and Functioning of System

5.4.1.1 Background

As described in detail in Section 5.2 earlier in this report, ensuring that the ESBWR containment is inerted with nitrogen prior to the station's power generation operations at levels higher than 10-15% of plant rated output is one of the two protective design measures that provide flammability control for the ESBWR. Containment inerting is the flammability countermeasure that deals immediately and effectively to prevent any possibility of potentially energetic reactive gas constituents from recombining under high-energy-release conditions. The second design countermeasure is ESBWR's incorporation of passive autocatalytic recombiners (PARs) distributed inside the containment. PARs deal with the slow radiolysis-caused additions of both hydrogen and oxygen into the containment atmosphere by reacting small stream flows of this atmosphere passively under a form of "cold combustion". Thus, containment bulk regional mixture concentrations are prevented from reaching levels which could result ,presuming the presence of some random ignition source, in a high-energy-release burn (deflagration) which is felt by the containment structure as a sharp, momentary, pressure loading.

The Containment Atmospheric Control System (CACS), is thus provided on ESBWR to establish and maintain a suitably inert atmosphere within the primary containment during all plant operating modes except during plant shutdown or during limited periods of time to permit access for inspection at low reactor power. The objective of the system is to preclude combustion of hydrogen and prevent damage to essential equipment and structures.

Perfect inerting, i.e. a pre-accident condition of 100% nitrogen, 0% oxygen. is not needed to achieve effective short-term flammability control in ESBWR. It suffices that ESBWR's containment atmosphere be inerted, i.e. reduced in the oxygen constituent, down to an atypically low level compared to the majority of the fleet of inerted-BWRs, but at a level that has been shown to be readily achievable.

5.4.1.2 Detailed CACS System Description

The ESBWR CACS is comprised of a pressurized liquid storage tank, a steam-heated main vaporizer for large nitrogen flow, electric heater for vaporizing makeup flow, two injection supply lines, two exhaust lines, a bleed line, a containment overpressure protection line, and associated valves, controls and instrumentation. Most CACS components are located inside the reactor building (RB). Exceptions include:

- the liquid nitrogen storage tank, which is located in the yard;
- the steam-heated main vaporizer, which is also located in the yard;
- the electric heater, which is located in the service/auxiliary building; and
- portions of the containment overpressure protection exhaust line to the stack.

The larger of the two CACS injection supply lines originates at the nitrogen storage tank. Leaving the tank as a liquid, the nitrogen is vaporized in the aux-boiler-supplied steam-heated nitrogen vaporizer. Downstream of the vaporizer, the nominal pipe size is increased to 100 A and extends until the gaseous nitrogen passes through a pressure control valve. Along the pipe run downstream of the pressure control valve leading to the penetration at the RB wall, the nominal pipe size is 200 A This increases once again to a nominal pipe size of 500 A at the RB penetration. Inside the RB along the main injection supply piping are found a flow element and the outboard member of a series-pair of containment isolation valves. At this point , the 500 A size line branches into two branch runs:

- a 350 A run that permits nitrogen injection into the suppression pool airspace; and
- a 350 A run that provides nitrogen injection into the upper drywell.

The second (closest to containment) member of each pair of containment isolation valves is located on each of these branch piping runs, just outboard of the primary containment vessel (PCV) structure.

The smaller of CACS' two injection supply lines, sized at 25 A, is used only for makeup. It includes an electric heater to vaporize the nitrogen and to regulate the nitrogen temperature to acceptable injection temperatures. Remotely operated valves, together with a pressure-reduction valve, enable the operator to accomplish low rates of nitrogen injection. Once inside the RB, this line also branches into a suppression pool airspace injection line and an upper drywell injection line. Each branch run converges, inside of the RB but outside of the PCV, with the main injection lines to utilize common injection points in the upper drywell and the suppression chamber airspace.

The CACS includes a nominally 400 A exhaust line leading from the lower drywell at opposite azimuthal direction from the inlet in the upper drywell. After enlarging to 500 A size (the discharge line connects to the Reactor Building HVAC System (RBHVAC System) exhaust where exit gases are served by exhaust fans, filters, and radiation monitors before being diverted to the plant stack. A small 25 A size bleed line bypassing the main exhaust line is also provided for manual pressure control of the containment during normal reactor operation.

A second exhaust line, having a containment penetration size of 350 A , is provided to the suppression chamber airspace. This line connects with the lower drywell's 500 A size exhaust line to utilize the same RBHVAC System services.

Along this exhaust line, upstream of the connection to the lower drywell exhaust line, is a connection to the containment overpressure protection line that also leads to and discharges into the plant stack. This 200 A size takeoff line includes two rupture disk assemblies, one at each end of the run of piping. This line provides for the release of containment pressure, in a post-accident time period, prior to the pressure reaching the point where main containment structural integrity could be lost. Venting from the wetwell takes advantage of the pool scrubbing effect of the suppression pool before gases are released.

On this line are a pair of normally open, air-operated valves which can be closed to re-secure containment isolation once the overpressure condition has been relieved. The region between the rupture disk assemblies are serviced by bleed-and-fill connections by which this length can be inerted. The inboard rupture disk, which is located just outside of the containment, has a rupture pressure that corresponds to the protection limit pressure for the containment. The second rupture disk, which is located close to the plant stack, has a much lower design rupture pressure. This latter assembly is used simply for facilitating the inerted condition for the run of piping that leads vented containment atmosphere out to the stack.

The containment isolation valves provided in the inerting, makeup, exhaust and bleed lines close automatically upon receipt of an isolation signal from the Leak Detection and Isolation System (LD&IS).

Upstream of the pressure-reduction valve in the makeup line, a small branch line (not shown on the system schematic diagram) is provided and connected to the High Pressure Nitrogen Supply System (HPNSS). This line is used for the initial charging of the HPNSS and makeup to keep the HPNSS charged with nitrogen during normal plant operation.

5.4.2 Design Bases

5.4.2.1 Safety Design Bases

The Containment Atmospheric Control System (CACS) does not perform any safety-related functions. Therefore, the CACS has no safety design bases other than provision for safety-related containment penetrations and isolation valves.

5.4.2.2 Plant Investment Protection Design Bases

- The ESBWR CACS shall be designed to establish an inert atmosphere, i.e. less than 4.0 dry-basis-percent (DB%) oxygen by volume, throughout the containment in less than 4 hours following an outage. This is a performance (a speed of inerting) measure, to ensure that containment inerting does not fall onto the start-up critical path. This also is the nominal performance of the CACS used in previous inerted-containment BWRs. Ultimately, the CACS is required to bring the oxygen dry basis percentage (DB%) to the values given below. It should be noted that the flammability limit for oxygen in a hydrogen-rich mixture is generally taken as 4.0 DB%.
- The ESBWR CACS shall be designed to establish a more completely inert atmosphere, equal to or less than 2.0 DB% in both the drywell and in the suppression pool airspace within the next 8.0 hours after reaching the 4.0 DB% conditions. Because post-LOCA radiolysis produces hydrogen and oxygen at approximately double the rates in ESBWR with its 4000 MWt rating as in the SBWR with its 2000 MWt rating, it becomes necessary that the initial oxygen concentration in the ESBWR containment be maintained at a lower value than what would be sufficient for SBWR in order to keep oxygen concentrations within the ESBWR containment from building up and exceeding a limiting case value within the design time period. This explains the basis for the 2.0 DB% figure stated above. While it is true that ESBWR's 33.5 meter diameter containment has more initial

volume than the 31.5 meter diameter of SBWR, that difference is not enough to offset the increased radiolysis production rate or relieve the burden to establish a low initial oxygen concentration during power generation operations. Note also that the 2.0 DB% figure permits establishing a Tech Spec limit condition of 3.0 DB% which gives the operator a working margin (3 DB% - 2 DB% = 1 DB% margin).

- The CACS shall be designed to maintain a slightly positive pressure in the PCV during normal and abnormal conditions such that, if an accident condition were then to occur, air (oxygen) in-leakage into the inerted spaces from the RB would not occur under any expected accident sequences including expected operator mitigation actions and/or expected post-accident recovery sequences.

- The CACS shall be designed to maintain approximately 4.8 kPa positive pressure within the PCV relative to its immediate surroundings, i.e. the RB. The system shall have the capability to replenish containment atmosphere leakage occurring at this 4.8 kPA pressure differential assuming the same loss coefficient [A/(root-K)] that is calculated for the accident-basis assumed PCV leakage rate, i.e. the A/(root-K) value that corresponds to a PCV leakage rate of 0.5% per day based on containment design pressure.

- The CACS shall facilitate de-inerting the containment for safe operator access without breathing apparatus in less than 12 hours, assuming the containment atmosphere is 100% nitrogen. This condition could develop after several months of power generation operations, as original containment atmosphere that was 2.0 DB% is slowly worked downward due to leakages from nitrogen-supplied pneumatic equipments and balancing vent/purges take place to keep PCV pressure constant. In this mode, the CACS provides the piping connections (with isolation valves) of adequate size, such that when these connections are opened in conjunction with the RBHVAC System exhaust fans that actively draw atmosphere out of the containment and the RBHVAC System air supply blowers, which inject fresh air into the PCV, the required deinerting performance can be met. For this performance specification, the oxygen concentration that corresponds to safe operator access shall be taken to be 19.0 DB%, even though it is expected that the regulations acceptable in all countries would permit PCV entry by personnel without breathing apparatus at oxygen levels slightly lower than this value.

- The time periods established for inerting, and deinerting, are different than those established for the SBWR. Future work is required to confirm that these longer times have not caused any extension to the outage critical path.

- The CACS shall rely upon sensors and read-out instrumentation of the Containment Monitoring System (CMS) for the measurement of in-process conditions within the PCV.

- The CACS shall be designed to perform continuous containment leakage rate monitoring and detect gross leakage of containment atmosphere during normal reactor operation.

5.4.3 Configuration and Special Features

Section 5.1 discusses the operation of the containment overpressure protection subsystem, and includes information on the setpoint pressure at which the rupture disks in this overpressure protection line are designed to burst (typically, at about 180% of the PCV design pressure).

To preclude any possibility of trapping oxygen-rich mixture in the regions atop the GDCS pools, three small lines are provided (not shown on the system schematic diagram), one for each GDCS pool. These lines, which require no valves, run from the drywell injection line, beginning from inside the PCV and upstream of the gas-diffuser, and terminate in the airspace region standing above the water surface within respective GDCS pools. During inerting and de-inerting of the drywell, the slight pressure drop (i.e., backpressure) afforded by the main-injection-line diffuser, will provide a small flow rate of process gas into this pool space. A corresponding outflow of initial gas will flow down the vertical pipes that communicate this above-pool region with the wetwell airspace.

5.4.4 System Operation

Startup Operation (Inerting)

Following aligning of CACS valves to the inerting mode, the auxiliary steam supply is manually activated to service the steam vaporizer. Once this steam supply has been activated, subsequent control is basically automatic, with temperature signals sensing the process nitrogen outlet gas temperature leaving the vaporizer being utilized as an input signal to control circuits that balance the outlet temperature and PCV pressure at desired levels. Liquid nitrogen from the nitrogen storage tank arriving in the steam vaporizer is vaporized, heated and then routed to the PCV via the main injection line. This nitrogen gas (having an oxygen impurity content of less than 0.05 DB%) is then injected either into the drywell and/or into the wetwell airspace. The vaporizing process creates a gas pressure that must be controlled to match desired injection rates. This is done via the pressure control valve located just downstream of the vaporizer unit.

In the drywell, the entering flow of nitrogen rapidly becomes well-mixed throughout the drywell atmosphere by operation of the Drywell Cooling System's (DCS') fan-cooler units. The lower drywell exhaust line is kept open to displace drywell resident atmosphere with nitrogen. The drywell gas volume is only about 120% of the wetwell airspace volume; because of the effectiveness of mixing, the volume of nitrogen gas, which must be, supplied during this inerting amounts to about 2.5 drywell volumes to reach the 4% level. Additional drywell volumes (to be determined later) is needed to bring oxygen down to 2.0 DB%.

In the wetwell, no internal fans exist to assist with mixing, and furthermore the deep-web I-beam structure that extends below the underside of the diaphragm floor tends to inhibit prompt mixing. The CACS designer uses a slightly larger number of wetwell volumetric change outs, to compensate for this slightly less-efficient gas injection/mixing process. Offsetting this situation, is the single-point injection/single-point removal positions, which aids the inerting since the early resident gas removals will consist of higher oxygen concentrations than would apply under an instantaneously-bulk-mixed rate calculation.

Once the desired concentration of nitrogen is reached in either PCV airspace, the respective exhaust line is allowed to close. When the required inerted containment operating pressure is attained, the inerting process is terminated by the closure of the nitrogen supply shutoff valve and inerting isolation valves, and de-activating the auxiliary steam supply to the vaporizer. The CACS operation mode now goes to "Normal Plant Operation".

Normal Plant Operation

The containment is maintained inert automatically after manually aligning to the makeup subsystem. A low flowrate of liquid nitrogen is vaporized via the electric heater and heated to desired temperature, and then is injected into the drywell and/or the wetwell airspace to makeup for any PCV out leakage. The PCV atmosphere is kept constant at a slightly positive pressure relative to the RB to preclude air (oxygen) in-leakage. In response to any change in containment pressure, the pressure control valve modulates (opens or closes to provide nitrogen makeup, thereby maintaining containment pressure within a target control range.

Any increase in containment pressure over the normal operating range is controlled by manual venting through the exhaust drywell bleed line (see system schematic diagram). Such increases are typical as the NSSS and drywell structure warm up during the early hours of resuming power generation operations.

The amount of the nitrogen makeup provided to the containment (including makeup to HPNSS) is constantly measured and tallied by flow metering devices. Large makeup flow, over time, indicates a condition of prospective excessive PCV leakage, and either condition will be annunciated in the main control room (MCR).

De-inerting (Plant Shutdown Operation)

Following shutdown, the PCV atmosphere must be de-inerted to allow safe personnel access. Breathable air from the RBHVAC System, possibly supplemented by a temporary portable de-inerting blower (to be determined later), is injected to the drywell and/or wetwell air space through the respective inerting injection lines. The incoming air displaces PCV resident gases (mostly nitrogen) into the exhaust line. Vent gases are removed by the RBHVAC System exhaust fans, filters, and radiation detectors before being diverted to the plant stack.

5.4.5 Safety Evaluation

The CACS has no active safety-related function except the primary containment isolation function. Failure of the CACS does not compromise any safety-related system or component, nor does it prevent a safe shutdown of the plant.

5.4.6 Testing and Inspection Requirements

CACS primary containment penetrations, including isolation valves, undergo routine in-service inspection and testing as required by ASME Code, Section XI.

Preoperational testing demonstrates the capability of the CACS to meet design requirements, including valve fail-safe responses to loss of air and/or electrical power. Trip and alarm logics are checked. The complete process system is also hydrostatically tested per ANSI B31.1.

5.4.7 Instrumentation Requirements

The Containment Monitoring System (CMS) provides PCV oxygen level (and hydrogen level) monitoring during normal plant operation as well as during post-accident conditions. Several sample points are provided in each major PCV compartment, with various of these sample points located high and others low in their respective regions to ensure detection of any non-uniform gas mixture conditions.

The CACS is manually actuated from the main control room (MCR). The inerting, makeup and de-inerting modes of the CACS are placed into service by aligning corresponding valves through remote manual control switches.

5.5 Features Provided for Prevention and Mitigation of Severe Accident

5.5.1 Introduction

Severe accident (SA) considerations are important in the design of any modern nuclear power plant (NPP). In Europe, Japan and the US this becomes more complicated due to the fact that the design requirements vary between different countries. The ESBWR design philosophy is to continue to maintain design flexibility in order to allow for potential modifications.

This section reviews the design approach and proposed ESBWR design features for the prevention and mitigation of severe accidents.

5.5.2 Layered Defense-in-Depth Approach

The ESBWR utilizes the concept of defense-in-depth as a basic design philosophy. This is a approach that relies on providing numerous barriers. These barriers include both physical barriers (e.g., fuel pellet, fuel cladding, reactor vessel and ultimately the containment), as well as layers that emphasize accident prevention and accident mitigation. The ESBWR considers beyond design basis events in its design approach. It provides for additional defense-in-depth by considering a broad range of events, including those with very low estimated frequency of occurrence (<1.0E-5 per reactor year) and by incorporating design features to mitigate significant containment challenges.

Using this layered defense-in-depth approach, the following are the main elements in the design against severe accidents:

- Accident prevention
- Accident mitigation
- Containment performance including design features to address containment challenges during a severe accident

5.5.3 Proposed ESBWR Design Features for Severe Accident Control

Several features are designed into the ESBWR that serve either to prevent or mitigate the consequences of a severe accident. Key ESBWR features, their design intent, and the corresponding issues are summarized in Table 5.5-1. For each feature listed in Table 5.5-1, brief discussion is made below.

1) Isolation Condenser (IC) System

The ICs consist of the first and most important line of defense against a SA. The ESBWR is equipped with four ICs, which conserve RPV inventory in the event of RPV isolation. A detailed description of the IC system is provided in Section 3.3. Basically, the ICs take steam from the RPV and return condensate back to the RPV. The ICs begin operation when the condensate lines open automatically on diverse signals including RPV level dropping to Level 2. After operation begins, the ICs are capable of keeping the RPV level above Level 1, the setpoint for Automatic

Depressurization System (ADS) actuation. The design mitigates noncondensable buildup in the ICs (that can impair heat removal capacity) by temporarily opening a small vent line connecting the ICs to the suppression pool. The vent line is operated automatically when high RPV pressure is maintained for more than a set time. The vent line valves re-close automatically when RPV pressure is decreased below the setpoint pressure.

In the event of a break in the primary system or ADS actuation, the RPV will depressurize. The ICs are not required to prevent containment pressurization. That function is served by the Passive Containment Cooling System (PCCS).

2) Automatic Depression System

The ESBWR reactor vessel is designed with a highly reliable depressurization system. This system plays a major role in preventing core damage. Furthermore, even in the event of core damage, the depressurization system can minimize the potential for high pressure melt ejection and lessen the resulting challenges to containment integrity. If the reactor vessel fails at elevated pressure, fragmented core debris could be transported into the upper drywell. The resulting heatup of the upper drywell atmosphere could overpressurize the containment or cause over temperature failure of the drywell head seals. The RPV depressurization system decreases the uncertainties associated with this failure mechanism by minimizing the occurrences of high pressure melt ejection. The ADS is described in detail in Section 3.1.4.

3) Compact Containment Design

The reactor building volume has been reduced by relocating selected equipment and systems to areas outside of the reactor building. The major portion of this relocation was to remove non-safety items from the Seismic Class 1 structure to other structures that are classified as Non-Seismic. Along with other simplified system design and relocation of non-safety items, a compact containment design is achieved with minimum penetrations. This reduces the leakage from the containment.

4) PCC Heat Exchangers

The basic design of the ESBWR ensures that any fission products that are generated following an accident will not be released outside the plant. One such removal mechanism is the PCC heat exchanger tubes. These tubes act like a filter for the aerosols. They essentially ‘filter out’ any aerosols that are transported into the PCC units along with the steam and non-condensable gas flow. Aerosols that are not retained in the drywell or the PCC heat exchangers, get transported via the PCCS vent line to the suppression pool where they are efficiently scrubbed.

The PCC heat exchanger not only cools the containment by removing decay heat during accident, but also provides fission product retention within the containment.

6) Lower Drywell Configuration

The floor area of the lower drywell has been maximized to improve the potential for ex-vessel debris cooling.

7) Containment Overpressure Protection System

The ESBWR design include vents from the suppression chamber air-space consisting of rupture disc and connected to the rooms directly below the suppression pool.

In the event that containment heat removal fails or core-concrete interaction (CCI) continues unabated, the rupture disc will open, preventing the overpressure failure of containment.

8) Flooder System

The lower drywell flooder system has been included in the ESBWR to provide automatic cavity flooding in the event of core debris discharge from the reactor vessel. This system is actuated on high lower drywell floor temperature. The system consists of three lines that connect each of the GDCS water pools to the drywell connecting vents. The volume of water in the GDCS pools is capable of flooding the RPV and lower drywell to the top of active fuel.

The flooder lines from two of the GDCS pools provide sufficient water to quench all core debris. By flooding the lower drywell after the introduction of core material, the potential for energetic fuel-coolant interaction (FCI) is minimized. Additionally, covering core debris provides for debris cooling and scrubbing of fission products released from the debris due to core-concrete interaction (CCI). From an overall containment performance point of view, the flooder provides a significant benefit for accident mitigation.

9) Passive Containment Cooling System (PCCS)

The PCCS system is described in great detail in Section 4.2

In summary, the PCCS is designed to remove decay heat from the containment. The PCC heat exchangers receive a steam-gas mixture from the drywell atmosphere, condense the steam and return the condensate to the RPV via an intermediate holding tank. The non-condensable gas is drawn to the suppression pool through a submerged vent line driven by the differential pressure between the drywell and wetwell.

10) Suppression Pool and Airspace

The suppression chamber is a large chamber with communication to the drywell through the horizontal vents, the PCCS vents and the vacuum breakers. Approximately one-half of the suppression chamber volume is filled with a large body of water, the suppression pool. The gas space in the suppression chamber acts as a receiver for noncondensable gases during a severe accident. The suppression pool plays a large role in containment performance because it provides:

- A large containment heat sink.
- Quenching of steam, which flows through the horizontal vents during rapid increases in drywell pressure.
- Effective scrubbing of fission products, which flow through the horizontal vents and the PCCS vents.

11) GDCS in Wetwell Configuration

The GDCS pools are placed above the reactor pressure vessel with their air space connected to the wetwell. This connection effectively increases the wetwell air space and provides a larger volume for noncondensable gases produced during a severe accident. Once the GDCS pools are drained, the total volume of the GDCS pools are added to the volume of the wetwell airspace.

A line with normally closed valves connects the GDCS pool to the vessel downcomer for low pressure injection. After the GDCS pools are exhausted following LOCA injection, coolant flow to keep the core covered is supplied from the suppression pool through an equalizing line, which branches from the GDCS line.

12) Inerted Containment

During a severe accident, gases are generated that could form a combustible mixture if oxygen were present. Combustion of these gases would increase the containment temperature and pressure, possibly resulting in structural damage. To avoid this potential challenge to containment integrity, the ESBWR containment is inerted during operation.

13) Recombiners

Deflagration due to the hydrogen produced by zircaloy oxidation could cause high quasi-static pressures in containment. Detonations could cause shock waves with high peak impulse loads lasting several milliseconds. Both the quasi-static and impulsive loads may threaten the structural integrity of the containment. In addition, hydrogen combustion events may threaten the operation of internal equipment or instrumentation required to control an accident sequence.

Passive Autocatalytic Recombiners are installed in the ESBWR containment to mitigate hydrogen combustion.

5.5.4 Summary and Conclusion

Severe accidents pose a kaleidoscope of time dependent challenges to reactor and plant safety. To meet these challenges, key design objectives have been established. The goal of the ESBWR approach to severe accidents is not only to meet all current requirements but also keep the design flexible to accommodate future research or development results. At the same time, the ESBWR strives to achieve harmony between the safety aspects of plant design with economic considerations.

Table 5.5-1: ESBWR Design Feature for Severe Accident Control

Design Feature	**Function**: Prevention/ Mitigation	Purpose/Description
Isolation Condenser System (IC)	Prevention	Controls reactor pressure. First line of defense against accidents.
Automatic Depression System (ADS)	Prevention	Depressurizes reactor pressure vessel and prevents high pressure core melt. Minimizes probability of direct containment heating.
Compact containment design with minimum penetrations. Lower drywell kept dry.	Mitigation	Containment isolation with minimum leakage. High retention of aerosols. Fuel coolant interactions minimized.
PCC heat exchangers	Mitigation	Filter aerosols - minimize offsite dose.
Lower drywell configuration	Mitigation	Lower drywell floor provides spreading area for cooling of molten core.
Containment overpressure protection system	Mitigation	A system that provides additional defense in depth.
Flooder system	Mitigation	Provides additional cooling for corium on the floor.
Passive Containment Cooling System (PCCS)	Prevention /Mitigation	Provides long term containment cooling. Keeps pressure within design limits.
Suppression pool and Airspace	Prevention /Mitigation	Suppression pool is heat sink. Scrubs aerosols. Airspace volume is sized for 100% metal water reaction.
GDCS in wetwell configuration	Prevention /Mitigation	Increases airspace volume to handle non-condensable gas release in SA.
Inerted containment	Prevention /Mitigation	Prevents hydrogen detonation
Recombiners	Prevention /Mitigation	Prevents hydrogen and/or oxygen combustion and detonation

6. Reactor Building and Auxiliary Fuel Building Design

6.1 Reactor Building Structure Design

6.1.1 Description

The reactor building (RB) consists of those areas and floors not part of the reactor primary containment. Refer to the arrangement drawings in Appendix B. The RB consists of the following floors (elevations):

- RB superstructure at elevation 33600 and above (also known as the "refueling floor".
- PCC and IC heat exchanger pools, the separator/dryer storage pool, the reactor cavity and the buffer pool at elevation 26600 (also including the standby liquid control pressure vessel rooms).
- The rooms at elevation –1300 (outside the containment)
- The rooms at elevation –6400 (outside the containment)
- The rooms at elevation –10000 (outside the containment)

The reactor building (RB) structure shares a common basemat with the reinforced concrete containment vessel. The RB at the operating floor at elevation 33600 mm and above, up to the support for the polar crane is made of reinforced concrete floors and walls. The RB superstructure, which is defined as, that part of the RB that is above the operating floor has either a structural steel roof or reinforced concrete roof.

The reinforced concrete containment vessel and the RB structure are integrated by the IC/PCC pool girders at the top of the containment and by floors at elevations shown above and the basemat. The IC/PCC pool girders are deep reinforced concrete girders with main, secondary and cross girders.

The pools listed above and inside the RB are connected to the reinforced concrete containment vessel drywell head cavity. These pools are made of reinforced concrete walls and floor. All these pools are lined for leak prevention.

The main steam tunnel consists of reinforced concrete walls and floor. It is located between elevations 17500 and 26600 mm and straddles the 0 degree azimuth of the containment wall.

6.1.2 Applicable Codes (Unless Local Country Codes Apply)

ACI 349: Code Requirements for Nuclear Safety-Related Concrete Structures.

AISC: Specification for Structural Steel Buildings - Allowable Stress Design (ASD) and Plastic Design.

ANSI/AISC - N690: Specifications for the Design, Fabrication and Erection of Steel Safety-Related Structures for Nuclear Facilities, American Institute of Steel Construction.

6.1.3 Code Classification and Safety Category

The RB is a Safety Category 1 structure. The RB is designed in accordance with the ACI 349 Code for concrete structures and the AISC specifications for steel structures.

6.1.4 Design Loads

Identification and definition of the various design loads taken into account for the RB are given in the paragraphs below:

Dead Load : The dead load of the structure and equipment plus any other permanent loads, including hydrostatic pressure of water in various pools. Structures supporting fluid loads during normal operation and accident conditions shall also be designed for the hydrodynamic (sloshing) loads.

Live Load: Live loads, including lateral soil pressure, and any moveable equipment loads and other loads, which vary in intensity and occurrence.

In loading combinations that include seismic loads, the live loads defined to be present when the plant is operating are included with the dead loads for the calculation of design seismic forces. Unless otherwise determined, the minimum live loads included in the seismic calculations are 25% of the design live loads.

Flooding Load: Hydrostatic lateral and buoyant pressures on structures below the flood level.

Temperature Effects:

- Normal Operating Condition: Thermal effects and loads induced by normal operating thermal gradients existing through the RB walls and roof.

- Accident Conditions: The temperatures for accident conditions at various locations and for various periods of time following a LOCA. In addition, the design considers other loading caused by the effects of high temperatures.

Design Pressure Loads (Operating, Test, Accident, SRV and LOCA): The pressure and differential pressure loads acting inside the reinforced concrete containment vessel during normal operating conditions, test conditions and design basis accident (DBA) conditions are described in Section 5.1. The pressure loads include the SRV discharge, condensation oscillation and chugging hydrodynamic loads. Since the RB is an integrated structure with the reinforced concrete containment vessel the effects of these hydrodynamic loads are considered in the design of the RB.

Isolation Condenser (IC) Operation Loads: The Isolation Condenser System consists of four heat exchanger loops. The ICs limit reactor pressure to less than the lowest setpoint of the SRVs for events having occurrence frequencies that classify these occurrences as moderately frequent events. The pressure loads in the air space of the IC/PCC pools during normal plant

operation, reactor isolation mode, and the accident pressure due to the postulated break of the steam supply piping connected to the IC is considered.

Passive Containment Cooling System (PCCS) Operation Loads: Each PCCS loop consists of a condenser which is open to the primary containment, a drain line to the PCC condensate drain tank, a vent discharge line and a cooling pool that is shared with the isolation condenser heat exchangers. The thermal effects associated with operation of the PCCS and the loads resulting from operation of the PCCS are considered. The loads due to PCCS non-condensable vent discharges into the suppression pool are also considered.

Seismic Loads: The peak ground acceleration for the Design Basis Earthquake (DBE) is 0.25 g in both the horizontal and vertical directions. Three horizontal ground motion design spectra are considered in the design. The structural dynamic analysis includes the effect of soil-structure interaction (SSI) and shall be done as a structure. The soil modeling considers the effects of embedment, soil layering, ground water location, and strain-dependent soil properties. The seismic SSI analyses for the design of the reactor building complex are performed for generic site conditions.

The DBE loads (two perpendicular horizontal components and one vertical component) based on the seismic SSI analysis are applied to the finite element model as equivalent static forces. The resulting moments and forces at various sections of the structure are combined based on the square-root-of-the-sum-of-the-squares (SRSS) method.

Pipe Break Loads: These loads are local effects on the RB due to a postulated high energy pipe break. These local effects include loads on the RB resulting from jet impingement, impact and pipe reaction loads due to a ruptured high-energy pipe.

Normal Pipe Reactions: Piping reactions which occur under normal operating or shutdown conditions, due to the most critical transient or steady-state conditions.

Post-Accident Internal Flood: The pressure of liquids on the walls and floors of structures and/or compartments due to post-accident flooding.

Aircraft Crash Load: Two aircraft crash load cases are considered. The first load case is a 20 ton aircraft striking a 7 square meter area of the exposed outer surface of the RB at a speed of 215 m/s, resulting in a 110 million Newton peak force in 40 ms. The second load case is a 1.7 ton aircraft engine striking a 1.15 square meter area at a velocity of 100 m/s.

Extreme Wind Load: An extreme wind speed of 60 m/s (134 mph) is used to calculate the extreme wind pressure on the exposed surfaces of the RB.

External Explosion Load: A pressure pulse with a peak dynamic pressure of 100 mbar (1.45 psi) and a time duration of 300 ms is considered to be acting on the RB.

6.1.5 Design and Analysis Procedures

The design of the RB is based on the results of the analysis of the integrated reinforced concrete containment vessel/RB structure discussed in Section 5.1. The RB membrane forces, shear forces, and bending moments at selected critical locations are obtained from the computer analysis for the integrated structure. These loads are combined in accordance with ACI-349 for concrete structures and ANSI/AISC-N690 and AISC-ASD specifications for steel structures.

The structural acceptance criteria are in compliance with ACI-349 for concrete and ANSI/AISC-N690 and ANSI-ASD specifications for steel.

6.1.6 Materials

The materials used in construction are in accordance with ACI-349 for concrete structures and ANSI/AISC-N690 specifications for steel structures.

6.2 Auxiliary Fuel Building Structure Design

6.2.1 Description

The structure houses primarily the spent fuel storage pool and its associated irradiated BWR fuel, new fuel, and irradiated core components such as incore detectors and control rods. In addition, the facility has the capability of handling the large spent fuel transfer casks. The lower floors house the Fuel and Auxiliary Pool Cooling and Cleanup System.

The auxiliary fuel building is located adjacent to the reactor building, yet is constructed as a detached structure. Refer to the arrangement drawings in Appendix B. The building is located on a separate basemat and is not interconnected with the reactor building. The auxiliary fuel building structure is a Safety Category 1 structure. The auxiliary fuel builidng is designed in accordance with the ACI 349 Code for concrete structures and the AISC specifications for steel structures.

6.2.2 Applicable Codes (Unless Local Country Codes Apply)

ACI 349: Code Requirements for Nuclear Safety-Related Concrete Structures.

AISC: Specification for Structural Steel Buildings - Allowable Stress Design (ASD) and Plastic Design.

ANSI/AISC - N690: Specifications for the Design, Fabrication and Erection of Steel Safety-Related Structures for Nuclear Facilities, American Institute of Steel Construction.

6.2.3 Design Loads

Since the auxiliary fuel building is not attached to the RB most of the resulting loads from the various accident and transient scenarios are not applicable to this structure. Identification and definition of the various design loads taken into account for the auxiliary fuel building are given in the paragraphs below:

Dead Load: The dead load of the structure and equipment plus any other permanent loads, including hydrostatic pressure of water in various pools. Structures supporting fluid loads during normal operation and accident conditions shall also be designed for the hydrodynamic (sloshing) loads.

Live Load: Live loads, including lateral soil pressure, and any moveable equipment loads and other loads, which vary in intensity and occurrence.

In loading combinations that include seismic loads, the live loads defined to be present when the plant is operating are included with the dead loads for the calculation of design seismic forces. Unless otherwise determined, the minimum live loads included in the seismic calculations are 25% of the design live loads.

Flooding Load: Hydrostatic lateral and buoyant pressures on structures below the flood level.

Temperature Effects:

- Normal Operating Condition: Thermal effects and loads induced by normal operating thermal gradients existing through the walls and roof.

- Accident Conditions: The design considers other loading caused by the effects of high temperatures from postulated accidents in the fuel building.

Seismic Loads: The peak ground acceleration for the Design Basis Earthquake (DBE) is 0.25 g in both the horizontal and vertical directions. Three horizontal ground motion design spectra are considered in the design. The structural dynamic analysis includes the effect of soil-structure interaction (SSI) and shall be done as a structure. The soil modeling considers the effects of embedment, soil layering, ground water location, and strain-dependent soil properties. The seismic SSI analyses for the design of the reactor building complex are performed for generic site conditions.

The DBE loads (two perpendicular horizontal components and one vertical component) based on the seismic SSI analysis are applied to the finite element model as equivalent static forces. The resulting moments and forces at various sections of the structure are combined based on the square-root-of-the-sum-of-the-squares (SRSS) method.

Pipe Break Loads: These loads are local effects on the RB due to a postulated high energy pipe break. These local effects include loads on the RB resulting from jet impingement, impact and pipe reaction loads due to a ruptured high-energy pipe.

Normal Pipe Reactions: Piping reactions which occur under normal operating or shutdown conditions, due to the most critical transient or steady-state conditions.

Aircraft Crash Load: Two aircraft crash load cases are considered. The first load case is a 20 ton aircraft striking a 7 square meter area of the exposed outer surface of the RB at a speed of 215 m/s, resulting in a 110 million Newton peak force in 40 ms. The second load case is a 1.7 ton aircraft engine striking a 1.15 square meter area at a velocity of 100 m/s.

Extreme Wind Load: An extreme wind speed of 60 m/s (134 mph) is used to calculate the extreme wind pressure on the exposed surfaces.

External Explosion Load: A pressure pulse with a peak dynamic pressure of 100 mbar (1.45 psi) and a time duration of 300 ms is considered to be acting on the building.

Other Loads: Any other loads specifically postulated for the unique service of this auxiliary fuel building (e.g., cask drop, etc.)

7. Electrical Power and Control/Instrumentation Design

7.1 Station Electrical Power Distribution System

This section describes the design, performance, configuration, and operation of the Electrical Power Distribution System (EPD) for the ESBWR as configured for a European site. The reference frequency is discussed as 50 Hz and the reference voltages correspond to this typical frequency standard in most European countries. The EPD design is readily adaptable to U.S. standard frequency of 60 Hz and standard voltages. The Safety Analysis Report will reflect the EPD System design for a U.S. site.

The EPD includes the Medium Voltage (11 kV and 6.6 kV) Distribution System (MVD) and the Low Voltage (400 V/230 V) Distribution System (LVD), the vital AC (uninterruptible) power systems and the 125 VDC and 250 VDC plant battery systems. Although the document applies only to the actual power distribution system within the plant, an interface discussion with the offsite power system is also included.

EPD consists of transformers, switchgear, motor control centers, panelboards, circuit breakers and interconnecting isolated phase bus duct, non-segregated phase bus duct cable bus and cables. The design of the major equipment of ESBWR EPD includes a 15% margin for additional loading capacity and load connections. These margins are in addition to regulatory requirements and are such that the EPD will satisfy all functional and operational requirements, i.e., voltage regulation, motor starting capability, maximum fault currents, etc., after adding the allowable future loads.

EPD is comprised of onsite and offsite (preferred) power systems and EPD receives power from both offsite and onsite sources. The offsite sources are the utility grid(s) and the main generator. The onsite sources are the non-safety-related emergency diesel generators and four divisions of 1E batteries. The definition of an offsite and an onsite power source is in accordance with EUR and ISO standards being also in agreement with USNRC NUREG-0800.

Broadly defined the EPD must supply power to the power generation loads, the plant investment protection (PIP) loads, and the safety loads; in general these loads are powered respectively by the MVD, LVD and lower voltages. Power generation loads are operated at 11 kV and include those electrical loads used to produce electricity, for example feedpump motors and circulating water pump motors. PIP loads are those needed for outages (instead of power generation) and to maintain the plant equipment and environment in an acceptable manner; even given a loss of offsite power. Finally safety loads are those needed to both monitor and power the passive cooling systems, divisional control room equipment and ECCS/RPS actuation systems.

EPD is configured and arranged to assure that with the loss of the offsite power system, the emergency diesels and a single failure in the onsite safety-related power system, sufficient power will be available for mitigation of design basis events. The four divisions of Class 1E power equipment are independent of each other.

7.1.1 Description and Functioning of System

7.1.1.1 Power System

Much of the offsite power system is designed and/or purchased outside the ESBWR scope. General parameters for the offsite electrical grid are nominal but for much of Europe would include:

Nominal grid voltage	400 KV +/- 5%
Nominal grid frequency	50 Hz +/- 5%
Degraded grid conditions	offset from nominal varies inversely with time >70% voltage >45 HZ

These parameters are required to allow proper function and interface of that portion of the offsite power system and onsite power systems which are within ESBWR scope; with more robust switchgear and generally larger motors, the electrical system can be designed for further degraded grid conditions.

The normal preferred power circuits (i.e. the main grid and switchyard) of the offsite power system have the capacity and capability required to:

1. Transmit the main generator maximum output minus house load - approximately a net plant output of 1380 to 1400 MWe.
2. Transmit the power required to operate the plant's systems during plant startup, normal operation, normal or emergency shutdown and plant outages when such power is supplied either from the offsite transmission system or from the main generator.

The alternate preferred power circuits (reserve transformer and switchyard) have the capacity and capability required to transmit the power required to operate the plant's systems during plant startup, normal plant low power operation, normal or emergency shutdown, and during plant outages. This switchyard may be the same as the main grid or another transmission voltage; however, it is intended that the normal and alternate power sources and their wiring and breakers be separated to the extent practical.

Although not specifically part of the ESBWR requirements, the plant reserve transformer and the busses they can access have the ability to start up the plant to a power level where the house loads can be switched to either the main generator or normal preferred power. This is done to allow (but not require) the utility to put gas turbines or other large (60 - 100 MW) generating sources in the alternate preferred power (reserve) switchyard so that the plant can have “black start” capability.

The offsite power system is designed so that:

1. The onsite power distribution systems are normally fed from the offsite transmission system during plant startup, normal or emergency shutdown, or during plant outages;
2. The onsite power distribution systems are normally fed directly from the plant main generator (i.e., the power flow path shall not go through the switching station) during normal plant operation and following a separation of the plant from the transmission system without turbine trip.

The offsite power system is designed so that, in the absence of a system failure, the onsite power systems, are fed continuously and unswitched (i.e., without load transfer, with the exception of startup from the alternate preferred source which will require an open-transition manual fast transfer) throughout plant startup, normal operation, and normal or emergency shutdown.

The offsite power system is designed to limit variations of the operating voltage of the onsite power systems to a range appropriate to ensure:

1. Normal and safe steady-state operation of all plant loads.
2. Starting and acceleration of the limiting drive system (generally a feedpump motor) with the remainder of the loads in service.
3. Reliable operation of the control and protection systems under conditions of degraded voltage.
4. The voltage variations when measured at the load terminals, at all voltage levels does not exceed:
   a) Plus or minus 10 percent of the load rated voltage during all modes of steady-state operation
   b) Minus 20 percent of the motor rated voltage during motor starting

Voltage levels at the low voltage terminals of the unit auxiliary and reserve auxiliary transformers will be analyzed for the maximum and minimum load conditions that are expected through the anticipated range of voltage variations of the offsite transmission system and of the main generator. Separate analyses will additionally be performed at the plant design stage for each possible circuit configuration of the offsite power supply system with the results summarized in an electrical system Load Flow, Fault, Voltage Regulation Analysis.

7.1.1.2 Medium Voltage Distribution System

The medium voltage AC power system shall be designed so that:

1. The power supply to the non-safety-related power generation buses is from one of the following:
   - the normal preferred power source, (i.e., the unit auxiliary transformers).
   - the alternate preferred power source, (i.e., the reserve auxiliary transformer).

2. The power supply to the non-safety-related PIP (plant investment protection) buses is from one of the following:
   - the normal preferred power source, (i.e., the unit auxiliary transformers).
   - the alternate preferred power source, (i.e., the reserve auxiliary transformer).
   - the onsite standby diesel generators.

For most plant transients like turbine trips or generator load rejections, no transfers in the plant electrical system are necessary. A turbine trip will open the generator breaker and allow the main transformer to "back feed" the unit transformers with no loss of electrical continuity. Similarly a generator load reject will open the main switchyard breakers and allow the main generator to carry house electrical load.

Should an individual 11 kV plant power generation buss lose it's unit transformer power feed, the buss will fast transfer to the reserve transformer but, because of the more limited capacity of these transformers, only one power generation buss at a time will be allowed a fast transfer. Should any or all of the 6.6 kV plant investment protection busses lose their unit transformer power feed, the buss will fast transfer to the reserve transformer.

For all non-Class 1E medium voltage buses, transfer from normal preferred to alternate preferred power sources will be an automatic fast-transfer function initiated by system parameters (i.e.. low voltage, protective device actuated, etc.) and independent of any operator action.

Transfer from the alternate preferred power source back to the normal preferred power source for all non-Class 1E medium voltage buses will be strictly an operator initiated, fast-transfer function and will occur one bus at a time to minimize the effect of system transients. Interlocks and independent controls to accomplish each type of transfer are provided. Automatic or manually initiated fast transfers for non-Class 1E medium voltage buses are either:

(1) Supervised, synchronized, open transition, live-bus transfer, or

(2) Dead-bus (only after transfer mode 1 has failed).

The PIP busses will automatically fast-transfer from the normal preferred source to the alternate preferred source, as described above but if the fast-transfer alternate preferred source is not available, the loads will be shed and the associated non-safety-related diesel generator will be started and a residual voltage bus transfer will occur. Bus loads will then be sequentially reconnected using timers. Transfer from the diesel generator source back to either the normal or alternate preferred sources will be operator initiated, open transition fast-transfer operation. PIP busses can also be manually fast-transferred between any of the three preferred sources.

The automatic load shedding of motors is accomplished by using under voltage relays for the medium voltage system and the low voltage power center switchgear systems. All low voltage motors powered from motor control centers drop out because their motor starter contactor is powered from the same AC power. The automatic load shedding and load sequencing scheme is designed into the control circuits of each individual load to be sequenced and is simple, reliable, and takes advantage of the plant operational margins to maximize the

reliability of the automatic loading of the onsite standby sources and minimize the risk of damage to motors and other equipment associated with this process.

7.1.1.3 Low Voltage Distribution System

The LVD System (400/230 Vac and lower) is designed so that power is supplied to the three categories of plant low voltage loads (i.e., PG, PIP, and safety-related loads).

The system is designed so that the failure or unavailability of a single power center or distribution transformer does not preclude continuous power generation/system operation.

When provided, redundant power supplies feeding the system's buses or panels do not operate in parallel (i.e., single buses will normally be fed by one power supply at a time; double-ended power centers will normally be fed from both sources with a normally open bus tie circuit breaker). Automatic, live-bus transfer schemes are provided for the double-ended power centers.

The majority of the low voltage loads are non-safety related and served by load centers and MCCs located in the various plant buildings. There are four safety related 400/230 Vac low voltage busses located in the Control Building that are fed through four separate non-safety related transformers.

The power supply to the safety-related Class 1E buses is from one of the following:

- the normal preferred power source.
- the alternate preferred power source.
- the onsite standby diesel generators.

This step load transfer to the alternate source transformers will result in a greater than normal transient level. For instance, the bus voltage will droop since the alternate source transformers' tap changers will not have sufficient time to maintain the nominal bus voltage. Operator initiated, manual fast-transfer from normal to alternate preferred power is also available.

7.1.2 Design Bases

7.1.2.1 Accidents Design Bases

EPD is configured and arranged to assure that with the loss of the offsite power system and a single failure in the onsite safety-related power system, sufficient power will be available for mitigation of design basis events. No single failure of the safety-related electrical system component or supporting system function will prevent the electrical system from supplying three -out-of-four divisions of safety related AC and DC power for reactor shutdown for at least 72 hours post accident.

The four divisions of Class 1E power equipment are independent of each other.

The safety-related portion of EPD and equipment design permits functional testing to verify the ability of the system to perform its safety function. System and equipment design permits operability testing during normal station operation, of components that are not normally exercised. On-line testing is intended to improve system reliability, safety, and availability. Experience has shown that inability to perform on-line testing of Class 1E equipment testing results in significant loss of reliability and availability.

The safety-related (Class 1E) portions of EPD supply Alternating Current (AC) power to the plant safety-related equipment during normal plant operation, startup, normal shutdown, accident mitigation, and emergency shutdown. AC power is supplied from the offsite transmission network or from the plant main generator, or when these are unavailable, from non-safety-related standby diesel generators. This design requirement is intended to provide power supply redundancy and reliability according to the type and service of the load. This will serve to satisfy the ESBWR safety objectives.

Control circuits of all safety-related equipment are designed such that if a design basis accident (DBA) occurs when the equipment is undergoing test, it will automatically transfer out of test mode and will be ready to support the safety mode.

All equipment, i.e., switchgear, buses, cables, raceways, motors, and other electrical loads associated with a given safety division, are readily identifiable by color coding; the requirement for color coding is to facilitate operation and maintenance activities.

7.1.2.2 Design Extention Conditions Design Bases

The FMCRDs are of special importance because they may be used to insert control rods to scram the reactor. This function is a backup to the hydraulic-powered scram so it is important that an available standby power supply be available for the motors even for loss of offsite power events.

The EPD supplies AC power to three load groups of non-safety-related Fine Motion Control Rod Drive (FMCRD) motors; all three load groups of FMCRDs are fed from a single non-safety related diesel supplied buss. If one diesel backed buss loses power for whatever reason, the FMCRD load groups are fast transferred to a buss backed by the other non-safety diesel. This also ensures that a single failure in the non-Class 1E FMCRDs could only affect a single diesel generator.

The EPD is designed to allow easy connection of portable low voltage generators (i.e. fire trucks, railroad cars etc.) to the safety busses in the unlikely event that the non-safety grade diesel generators could not be started in a 72 hour period.

7.1.2.3 Plant Investment Protection Design Bases

EPD has four electrically independent and physically separate redundant load groups for the PG loads and four for the PIP loads, including all subsystems, of which a minimum of two load groups are required to bring the plant to a normal shutdown. Only one PIP load group is required

to bring the plant down to a safe and timely shutdown condition. Therefore, operators have adequate flexibility for both operations and testing during normal operation.

The non-safety-related portions of EPD functions to supply AC power to the plant non-safety-related equipment for normal plant operation, startup and normal shutdown. Power is supplied from the offsite transmission system or from the plant main generator.

EPD is configured such that the time necessary to restore the system to operability after loss of a component is minimized. The EPD incorporates features which enhance system availability.

The plant electrical system is designed to minimize switching and automatic bus transfers; based upon experience, power supply switching stresses equipment and increases the chance of equipment failures and operator error.

7.1.3 Configuration and Special Features

The ESBWR electrical system design is dominated by the very large transient feedwater flow requirements which, in turn require four 11 MW feedwater and feedwater booster pumps (three of each normally running). Motors of that size are most efficiently served by a relatively high medium voltage electrical system (11 kV instead of 6.6 kV). The higher voltage also makes it easier to supply relatively large circulating water and makeup pump motors at some distance from the plant with reasonable cable sizes. As a result a dual voltage electrical system is chosen for the ESBWR.

A high (11 kV) voltage is used to supply the motors on the four “power generation” busses; these will represent 70 - 80% of the running and connected loads of the electrical system and represent loads needed only to generate electricity. These loads are:

- Feedwater and feedwater booster pumps
- Circulating water pumps
- Condensate pumps
- Cooling tower makeup pumps
- Electrical boiler
- Tower fans (if needed)

A lower (6.6 kV) voltage is used for the loads on the four “plant investment protection” (PIP) busses; these are loads needed to provide a normal plant HVAC environment, appropriate cooling water to various heat loads, plant computers and control and, indirectly the 1E safety busses. The non-1E diesel generators are directly connected to the PIP busses and can operate all of the PIP loads necessary to support the above functions. Typical PIP loads are:

- Plant service water pumps
- Reactor cooling water pumps
- Turbine cooling water pumps

- Chillers
- CRDS pumps
- RWCU/SDCS (ASD driven) pumps
- Air compressors
- Mechanical vacuum pumps

The PIP busses are also used to supply all of the plant's low voltage load centers located in the reactor, control, and turbine buildings and cooling tower and mechanical draft cooling tower pumphouses. All of the ESBWR's low voltage electrical systems are supplied at 400/230 VAC, 125 VDC and 250 VDC directly or indirectly from the PIP busses.

Four of the 400/230 VAC busses are 1E safety busses which supply important interruptible non-1E loads like control room chillers and the 1E battery chargers, batteries, and inverters that supply uninterruptible power for both normal operation and the segregated loads needed to cope for 72 hours without electricity.

7.1.3.1 Offsite Power System

Much of the offsite power system is designed and/or purchased outside of the plant designer's scope. General parameters for the utility grid were described previously and are required to allow proper function and interface between equipment outside the plant designer's scope and the on site electrical power distribution system.

The offsite power system supplies power to the plant's medium voltage PG switchgear (buses A1, B1, C1, D1), medium voltage plant investment protection (PIP) switchgear (buses A2, B2, C2, D2), and indirectly to the Class 1E switchgear (buses A31, B31, C31, D31). The PG buses provide power to those loads that are needed exclusively to ensure unit operation during startup, normal operation, and normal shutdown. The PIP buses supply power to those auxiliary and service loads which must remain operational independent of the unit operating conditions or during plant shutdown, and to the Class 1E buses.

The offsite power system is referred to in industry standards and regulatory guides as the "preferred power system". The preferred power system is comprised of a "normal preferred" power supply (main switchyard) and an "alternate preferred" power supply (reserve transformer switchyard). The normal and alternate preferred power supplies consist of electrically independent and physically separate circuits capable of operating independently of the onsite non-1E and the Class 1E standby power sources. The off-site power supply system consists of the set of electrical circuits and associated equipment used to interconnect the offsite transmission system, the plant main generator, and the onsite power system. Many of the following items included in the offsite power system are designed and/or purchased by others. The off-site power system includes all equipment and circuits associated with the following:

- Utility grid
- Transmission towers

- Separated switching stations
- Plant switchyards and their control and relaying components
- High voltage connections from the main transformers to the plant switchyard.
- Main transformers
- Reserve auxiliary transformer
- Unit auxiliary transformers
- Main generator
- Main generator breaker
- Isolated phase bus
- Non-segregated phase bus duct and/or cable bus that supply power from the unit and reserve auxiliary transformer to the input terminals of non-safety-related medium voltage PG switchgear (MVD busses-A1, B1, C1, D1) and medium voltage PIP (MVD busses A2, B2, C2, D2)

The standard design of the ESBWR plant is based on certain interface assumptions concerning the offsite power system. The main transformers are such an interface; for a specific example, the assumption of the grid voltage and main transformer impedance.

Section 8.2 of USNRC NUREG-0800 and good design practices require that the ESBWR EPD mitigate the risk of total off-site power loss resulting from a single equipment failure or a disturbance in the transmission system, including those associated with a normal operating conditions, weather and environmental conditions, spurious equipment operation, or loss of control power.

Industry standards and regulatory guides (IEEE 765) consider all non-safety-related power sources which can provide power to the Class 1E standby power sources as part of the Offsite Power System. Per this definition, the boundary between the offsite and onsite power systems is at the source side of the Class 1E medium voltage switchgear circuit breaker input terminals.

7.1.3.1.1 Main Generator

The main generator is sized for a .9 power factor and a valve wide open (VWO) turbine flow approximately 5% greater than a rated gross output of approximately 1400 MWe; this requires a 1735 MVA generator; the nominal generator voltage is 24 KV. In all respects the generator is standard technology with no new R&D required for this power level; either the water cooled or hydrogen cooled rotor technologies can be supported.

7.1.3.1.2 Main Transformer

The main transformers are composed of a bank of three normally energized single-phase transformers with an additional installed spare single phase transformer. The main transformer is sized for the generator power less the expected house load of approximately 50 MVA; the 1735

MVA total rating is made up of three single phase 580 MVA transformers and a similarly sized and installed single phase spare.

Because the major component contributor of the EPDs calculated plant unavailability is the main transformer, provisions are made to permit connecting and energizing the spare single phase transformer within 12 hours following a failure of one of the normally energized transformers. The plant can be brought back on line within an additional 24 hours. Taps are provided on the main transformer to meet voltage regulation requirements.

The main step-up transformers are arranged side by side outside the turbine building close to the location of the generator terminals and generator circuit breaker. The transformers are positioned approximately 9.5 meters center-to-center and have fire walls installed between them for fire protection purposes. Each main transformer is provided with separate oil collection pits and drains to a safe disposal area, and are provided with fire protection deluge systems. These features are designed to minimize length of the isolated phase bus duct and satisfy equipment configuration of EPD

7.1.3.1.3 Main Generator Breaker

The main generator breaker allows the generator to be taken off-line and power from the offsite transmission system to be supplied continuously and unswitched through the main step-up transformers to the unit auxiliary transformers and their loads, thus serving as the startup power source for the plant. During startup, the main generator breaker allows the generator to be connected to the offsite system after synchronization.

The generator breaker is provided with dual trip coils with control power supplied from redundant load groups of the non-Class 1E 125V DC power.

7.1.3.1.4 Unit Auxiliary Transformers

Two three-winding Unit Auxiliary Transformers (UAT-A, and B, respectively) are connected to provide preferred power to the four approximately equal load groups of PG busses and the four approximately equal load groups of PIP busses. The secondary windings of UAT-A and B are designated as X & Y and are rated 6.6 kV and 11 kV, respectively. The transformers are designed to supply all connected house electrical loads for all modes of plant operation and are each rated at 58.8/12.5/56.3 MVA (primary/X/Y).

The X windings of UAT-A and B supply normal preferred power to the 6.6 kV non-Class 1E Plant Investment Protection (PIP) busses A2, B2, C2 and D2. The Y windings of UAT-A and B supply normal preferred power to the 11 kV non-Class 1E Power Generation (PG) busses A1, B1, C1 and D1. For the PIP and PG busses, the four load group configuration was chosen to match the mechanical system requirements.

The primary windings of the UATs are connected in delta and the secondary windings are connected in wye; this causes the secondary winding voltage phasor to lag the primary winding voltage phasor by 30 electrical degrees. This is required to allow the plant electrical busses to match the phase shifts of preferred power system derived from the reserve auxiliary

transformers; i.e., normal preferred power from the utility grid is transformed twice, first by the main transformers and second by the unit auxiliary transformers the alternate preferred power involves only one transformation. This relationship is subject to change depending on the phase-angle relationship between the main (400 KV) and reserve transformer switchyard.

The low voltage (secondary) windings of the unit auxiliary transformers are connected in wye configuration and the neutral is low resistance grounded. The system ground resistance limits the ground fault current to approximately 1000 amps. To accommodate the usually severe degraded operating voltage requirements for European power plants, each secondary winding is furnished with a 32 step automatic load tap changer whose range of +15% to -5% will limit variations of the operating voltage of the onsite power systems.

After the main transformer the next largest EPD contributors to plant unavailability are the unit auxiliary transformers and their protection devices. Provision has been made to isolate each UAT within a short period of time by removing links in the isolated phase bus (primary-side) and non-segregated bus (secondary-side), and restoring power to the affected PG and PIP buses by operation of circuit breakers connecting them to the alternate preferred power supply. The plant can be brought back on-line within an additional 24 hours.

The unit auxiliary transformers are arranged side by side outside the turbine building close to the location of the generator terminals and generator circuit breaker. The transformers are positioned approximately 9.5 meters center-to-center and have fire walls installed between them for fire protection purposes. Each transformer is provided with separate oil collection pits and drains to a safe disposal area, and are provided with fire protection deluge systems. This arrangement serves to reduce the length of isolated phase bus duct.

7.1.3.1.5 Reserve Auxiliary Transformer

One three-winding Reserve Auxiliary Transformer (RAT) are connected to provide preferred power to the four approximately equal load groups of PG busses and the four approximately equal load groups of PIP busses. The secondary windings of RAT are designated as X & Y and are rated 6.6 kV and 11 kV, respectively. The transformer is designed to supply all connected PIP and safety house electrical loads for all modes of plant operation but can only supply one feedwater and booster pump per two power generation busses in addition to the other power generation loads; two feedpumps and booster pumps are sufficient to start (or black start) the plant to the point where the main generator can supply all normally operating house loads. The reserve auxiliary transformer is rated at 40.7/12.5/28.2 MVA (primary/X/Y).

The X windings of RAT supply alternate preferred power to the 6.6 kV non-Class 1E Plant Investment Protection (PIP) busses A2, B2, C2 and D2. The Y windings of RAT supply alternate preferred power to the 11 kV non-Class 1E Power Generation (PG) busses A1, B1, C1 and D1.

The primary and secondary windings of the RAT is connected in a wye configuration which results in no phase shift.

The low voltage (secondary) windings of the RAT is connected in wye configuration and the neutral is low resistance grounded. The system ground resistance limits the ground fault current

to approximately 1000 amps. Each secondary winding is furnished with a 32 step automatic load tap changer whose range of +15% to -5% will limit variations of the operating voltage of the onsite power systems.

The reserve auxiliary transformer is arranged outside the turbine building at a distance from the main and unit auxiliary transformers and close to the switchgear rooms. The separation of the reserve transformers and the nearest unit auxiliary transformer is no less than approximately 15.24 meters. In addition, a fire wall is installed between the reserve auxiliary transformers and the unit auxiliary transformers for fire protection purposes. The combination of separation distance and fire walls minimize common-cause effects of fire or environmental factors.

7.1.3.1.6 Isolated Phase Bus Duct

The isolated phase bus duct serves to interconnect the main transformers, the main generator breaker, and the unit auxiliary transformers. Disconnecting links are provided for isolation of the generator breaker and isolation of failed main step-up- and unit auxiliary transformers. Isolated phase bus duct also connects the main generator to the generator breaker.

Following the traditional practice of rating the isophase bus at .95 voltage, the preliminary rating is 24 KV at 37.5 KA.

7.1.3.2 Onsite Power System

The onsite power system consists of the medium and low voltage switchgear and circuit breakers, power center transformers and other low voltage transformers; low voltage motor control centers, non-segregated phase bus duct and/or cable bus; and interconnecting power cables.

In general and where practical, the normal preferred and alternate preferred circuits and components (e.g. transformers, bus duct, cable bus, instrumentation and cable cables) are kept apart. More specifically the main and reserve transformer power feeds to the plant electrical system busses are separated by a minimum of about 15 meters in each direction and not allowed to cross vertically up to the point where connection is made to common equipment, or they are separated by barriers. Connections at common switchgear are at opposite ends of the switchgear.

7.1.3.2.1 Power Generation Busses

The power generation loads are divided into four non-safety 11 kV medium voltage electrical busses using switchgear with 1000 MVA interrupting duty; the switchgear is located in the electrical annex of the turbine building. Busses A1, B1, C1 and D1 are completely symmetric with each having a connected load of a:

- feedwater pump and feedwater booster pump
- circulating water pump
- condensate pump

- cooling tower makeup pump (these are also service water pumps in normal operation
- electric boiler
- tower fans (if needed)

The four PG busses each have access to a normal and alternate preferred power feed from the unit and reserve transformers, respectively. Automatic and manual fast buss transfer capability and slow "deadbus" transfer capability is provided; only one PG buss is allowed to automatic fast transfer to a reserve transformer at a time.

For both the medium voltage PG busses and the PIP busses described below, the switchgear consists of metal-clad construction with drawout type, stored energy vacuum or SF6 type circuit breakers. All circuit breakers are provided with surge protection devices and the switchgear interrupting rating is determined in accordance with requirements of ANSI C37.010. Switchgear control power is supplied from the two non-divisional 125 VDC battery systems.

Non-segregated bus and cable bus provide the interconnections between the UATs, RAT and their associated medium voltage switchgear; between various medium voltage switchgear buses; and between the non-safety-related emergency diesel generators and the PIP busses. Non-segregated bus is used where multiple equipment connections are required with a single feed since bus taps are commonly available, cable bus is used where branching is not required. Cable bus is used whenever possible to reduce installation cost and time.

Non-segregated bus and cable bus are sized to supply their load requirements and rated to withstand fault currents until the fault is cleared.

7.1.3.2.2 Plant Investment Protection Busses

The plant investment protection bus loads are divided into four non-safety 6.6 kV medium voltage electrical busses using switchgear with 500 MVA interrupting duty; the switchgear is located in the electrical annex of the turbine building. These busses are almost completely symmetric with each having a connected load as follows:

Bus A2	***Bus B2***	***Bus C2***	***Bus D2***
A PSW pump	B PSW pump	C PSW pump	D PSW pump
A RCCW pump	B RCCW pump	C RCCW pump	D RCCW pump
A TCCW pump	B TCCW pump	C TCCW pump	Fire pump
A RX Bldg Chiller	B RX Bldg Chiller	C RX Bldg Chiller	D RX Bldg Chiller
A Turbine Bldg Chiller	B Turbine Bldg Chiller	C Turbine Bldg Chiller	D Turbine Bldg Chiller
A CRD pump	B CRD pump	Mech Vac Pump	Mech Vac Pump
INST AIR Comp	INST AIR Comp	SERV AIR Comp	SERV AIR Comp
Cond Transfer Pump	Cond Transfer Pump		Cond Transfer Pump
RX Bldg load center	RX Bldg load center	RX Bldg load center	RX Bldg load center
RX Bldg Safety load center	RX Bldg Safety load center	RX Bldg Safety load center	RX Bldg Safety load center
TURB Bldg load center	TURB Bldg load center	TURB Bldg load center	TURB Bldg load center
Switchgear Bldg load center	Switchgear Bldg load center	Switchgear Bldg load center	Switchgear Bldg load center
Switchyard load center	Switchyard load center	Water Treatment Bldg load center	Water Treatment Bldg load center
Radwaste Bldg load center	Radwaste Bldg load center	Radwaste Bldg load center	Radwaste Bldg load center
Control Bldg load center	Control Bldg load center	Pumphouse load center	Pumphouse load center
FMCRD load center	FMCRD load center		Cooling Tower load center

The four PIP busses each have access to a normal and alternate preferred power feed from the unit and reserve transformers, respectively. Automatic and manual fast buss transfer capability and slow "deadbus" transfer capability is provided. No limits are placed on automatic fast transfer capability of these busses.

The plant investment protection busses are so named because they carry loads which, if powered, will allow all normal (and emergency) station activities except power generation. Specifically station services like HVAC, compressed air, lighting, fuel pool cooling, drywell cooling, battery charging etc. will remain available. As will be described below, the safety busses of the ESBWR do not have to be powered for at least 72 hours post accident but they will nevertheless be automatically sequenced when the diesels start.

These activities will remain available even with the unlikely simultaneous loss of normal and alternate preferred power (main and reserve transformer switchyards) because the PIP busses can also be powered by two standby non-1E emergency diesel generators.

Each diesel generator is rated at 6.6 kV and 8 MVA and is connected to two PIP busses. The diesel capacity is such that any one PIP buss can be completely powered but the automatic low bus voltage start, load and sequencing will generally load all four busses part way (for example only one turbine building chiller, TCW pump and CRD pump are necessary under these circumstances).

The diesel generator is a high quality industrial grade machine designed to perform emergency generator duty; there are no specific starting time or sequencing speed requirements on the system because it is not required for safety - only investment protection. Each emergency diesel system consists of independent prime movers and AC generators, auxiliary systems (starting, lubrication, cooling, fuel supply, excitation, etc.), local fuel storage and transfer system, and associated local (near equipment location) instrumentation, control systems, and protective relays. The standby diesels are located in protected areas of the electrical building and separated from each other.

Although not required because of the passive safety design of the ESBWR, either of the standby emergency diesels are capable of supplying the required power to safely shut down the reactor normally or after a loss of offsite power (LOOP) and/or loss of coolant accident (LOCA) and to maintain the plant in a safe shutdown condition and operate the auxiliary systems necessary for plant safety after shutdown.

Note that the use of a diesel generator-type of backup power has not been concluded. The ESBWR may use a gas turbine powered generators, similar to what is used at large hospitals for emergency backup power.

7.1.3.2.3 Non-1E Low Voltage System

The low voltage power system operates at 400 Vac for large motor loads and 400/230 Vac for smaller instrumentation and lighting loads. Uninterruptible AC and DC power supplies are also included. Generally the 400/230 Vac is obtained from load centers located in the various plant buildings to eliminate long runs of low voltage/high current cable and provide better

voltage regulation. The fewer load centers distribute 400/230 Vac to the larger number of MCCs (motor control centers) located at various locations in the same buildings.

7.1.3.2.3.1 Load Centers

Load centers are generally sized to supply motor control centers and motor loads of approximately 50 kW through 200 kW and are located in the:

- reactor building
- control building
- turbine building
- mechanical draft cooling tower area
- natural draft cooling tower area
- radwaste building

Load centers consist of transformers and associated low voltage switchgear; transformers located indoors are ventilated dry type and are non-flammable in air. The low voltage switchgear is of a metal enclosed construction with vacuum circuit breakers.

The load center transformer primary voltage is 6.6 kV (supplied from the various PIP busses and the secondary voltage is 400/230 Vac. The transformer secondary supplies its associated low voltage (400/230 Vac) switchgear.

7.1.3.2.3.2 MCCs

Motor Control Centers (MCCs) are arranged in four PIP non-safety-related load groups corresponding to the 6.6 kV PIP busses from which they originate. MCCs may be found in most plant buildings and each is supplied power from a load center of the same non-safety-related PIP load group. MCC motor starter control power is derived directly from its associated AC power utilizing a control power transformer.

Loads are distributed among MCCs according to their non-safety-related load group such that unavailability of any single MCC will not preclude continuous system operation.

MCCs are sized to supply small motors rated between approximately 0.37 kW through approximately 50 kW, control power transformers, process heaters, motor-operated valves and other small electrically operated auxiliaries. MCCs are also used to provide station lighting, service outlets and the transformers that provide lower voltage power. MCCs are of the indoor, metal-enclosed gasketed NEMA Type 12 with draw-out buckets containing motor starters and/or circuit breakers which will interrupt maximum fault currents.

7.1.3.2.3.3 Power Cables

Power cables are used throughout the plant to connect medium and low voltage switchgear and other electrical equipment and loads. Cable insulation and jacket materials selected for use in the ESBWR are resistant to heat, moisture, impact, ozone and nuclear radiation as expected during their operating life. Class 1E qualified cables are procured with a qualified life of over 40 - 60 years except in specific cases of special cables which are located in a mild environment. Cable ampacities and derating factors are based on the ICEA publications P-46-426 (Superseded by IEEE 835-1994) and P-54-440. All cables are qualified in accordance with IEEE 323 and IEEE 383 requirements.

7.1.3.2.3.4 Non-1E DC Power System

The ESBWR incorporates both a 125 VDC and 250 VDC battery system, each voltage level has two batteries sized for approximately two hours.

The two 125 VDC batteries (each rated approximately 1000 amp hours) are mainly used to power the plant's switchgear and emergency lighting.

The two 250 VDC batteries (each rated approximately 2000 amp hours) are mainly used to power the plant non-1E C&I uninterruptible power supplies and additionally provide emergency power to:

250 VDC Battery A	250 VDC Battery B
A C&I UPS	B C&I UPS
Main turbine emergency oil pump	Generator emergency seal oil pump
A feedwater pump and drive	A feedwater pump and drive
C feedwater pump and drive	C feedwater pump and drive

Each 125 VDC and 250 VDC battery has its own battery charger and there is an additional "backup" battery charger that can substitute for the normal charger. The backup charger is arranged so that the associated battery can be charged on line at an equalizing charge rate while the normal battery loads are disconnected from the battery and carried by the normal battery charger.

7.1.3.2.3.5 Non-1E Vital (Uninterruptible) Power System

The ESBWR incorporates two large uninterruptible power supply inverters each rated at 200 kW. These inverters are used to power the main control room computers and controllers and the multiplexing equipment in the field. In general the dual UPS supports the plant dual redundancy

scheme but an additional automatic, solid state buss transfer switch is used between the two UPS sources to make a third power supply used for the few triply redundant controllers. Vital AC power is distributed at 400/230 Vac 3 phase to regulating transformers in the various plant buildings to enhance voltage regulation and minimize line losses.

Manual and automatic bypass switches make it possible to maintain the inverters while both power continuity is maintained and the plant remains on line. Even a complete failure of one inverter and bypasses will still allow the plant to continue running at full power since all critical control systems are redundant with two power feeds.

7.1.3.2.4 1E Low Voltage System

The 1E, safety related low voltage power system of the ESBWR is unusual because there are no medium voltage circuits involved. The complete four division safety related electrical system is limited to 400/230 Vac, 125 VDC batteries and 220 Vac single phase vital (uninterruptible) power systems.

7.1.3.2.4.1 1E 400/230 VAC Power System

The Class 1E 600 Vac busses supply power to the four divisions of Class 1E loads. Class 1E loads are those Engineered Safety Features (ESF) loads needed for accident mitigation or safe shutdown. Two of the four divisions also supply power to three separate load groups of Non-Class 1E FMCRD motors, as described later. Class 1E switchgear is located in the associated divisional areas of the control and reactor buildings.

Four 6.6 kV PIP busses in the electrical annex each supply an approximate 200 KVA non-1E regulating transformer located in the control building; the transformer secondaries are rated at 400/230 Vac. Although each transformer normally supplies only one division, they are sized to supply two divisions if necessary; in addition to the ability to withstand a complete transformer failure with no technical specification, limiting condition of operation (LCO) impact, the scheme allows each safety buss to have access to either of the emergency diesel generators. The transformers output to four 1E 400/230 Vac divisional and separated safety busses.

In addition to the effects of operation in normal service environment, all Class 1E equipment will be designed to operate during and after any design basis event, in the area in which it is located. All Class 1E equipment is qualified to IEEE 323 (Section 2.2.1). Detailed information on all Class 1E equipment that must operate in a harsh environment during and/or subsequent to an accident is provided in the IEEE 323 Standard, but most electrical equipment covered by this system description is located in mild environment areas of the plant and is not exposed to either a LOCA or high energy line break (HELB) environment.

The four 400/230 Vac busses each have three 1E feeder breakers; two are from the normal and alternate transformer feeds as described above and the third leads to a weatherproof distribution panel outside the control building. This panel will have four non-1E breakers and electrical sockets into which can be plugged a 400/230 Vac “portable” (i.e. a fire truck or railroad car) generator(s). On the assumption that both normal and alternate power sources remain

unavailable and the plant on site emergency diesels cannot be started, the portable generator sockets allow a convenient electrical "jumper"; the safety related batteries are sized such that this intervention will not be required for at least 72 hours.

The redundant Class 1E electric divisions (Divisions I, II, III and IV) are provided with separate onsite standby AC power supplies, electrical buses, vital AC and DC power systems, distribution cables and raceways, controls, relays and other electrical components. Redundant parts of the system are physically separated and electrically independent to the extent that, in any design basis event with the resulting loss of one division or its equipment, the plant can still be shut down with the remaining three divisions.

Although no important safety loads are supplied by the 400/230 Vac busses, 1E interruptible loads like station lighting and control room HVAC are powered from these busses. The design of the plant EPD system is such that non-safety circuits are not connected to safety circuits except for the following:

The FMCRDs are divided into three groups, any two of which will assure the shutdown of the reactor core. In addition to the passive hydraulic scram capability of these drives, they have the ability to be driven in electrically. The ESBWR provides for the ability to drive in any two groups of the control rods electrically even given a single failure and the loss of offsite power. This is done by using a separate MCC for each of the three FMCRD load groups, two are directly powered by the 1E 400/230 Vac busses A31 and B31. The third group is powered from an automatic buss transfer switch that, in turn, is powered from busses A31 and B31.

7.1.3.2.4.2 1E DC Power System

The ESBWR incorporates two 125 VDC batteries for each of the four safety divisions. One of the batteries (per division) is sized (at ~ 1800 amp hours) to provide power for the divisional vital AC power systems and control room C&I and multiplexing equipment. Approximately five to seven hours capacity is provided which is more than sufficient for a controlled shutdown under accident conditions.

The other battery (per division) is sized (at ~ 3000 amp hours) to provide the smaller subset of electrical loads needed to "cope" with the reactor post accident for a three day period with no on site or offsite electrical power available. These include, for example, some instrumentation, relief valve solenoids and the depressurization valve squibs.

Each of the two batteries per division has its own battery charger. Additionally there is a "swing" battery charger per division that can substitute for either normal charger. The swing charger is arranged so that the associated battery can be charged on line at an equalizing charge rate while the normal battery loads are disconnected from the battery and carried by the normal battery charger.

7.1.3.2.4.3 1E Vital (Uninterruptible) Power System

The ESBWR incorporates two uninterruptible power supply inverters per division, one rated at 30 kW and the other rated at 20 kW. These inverters are used to power the main control room

divisional controllers, computers and displays and the divisional multiplexing equipment in the field. In general divisional vital AC power is distributed to only the control and reactor buildings at 220 Vac single phase; regulating transformers are used in the reactor building but are not needed in the control building where the inverters are located.

Manual and automatic bypass switches make it possible to maintain the inverters while both power continuity is maintained and the plant remains on line. Even a complete failure of one divisional inverter and bypasses will only start a two week limiting condition of operation (LCO); it is unlikely that the inverter could not be repaired in that time.

The inverter rated at 30 kW is used to provide power for the divisional control room C&I and multiplexing equipment. The divisional batteries provide approximately five to seven hours capacity which is more than sufficient for a controlled shutdown under accident conditions.

The other inverter is rated at 20 kW and is used to provide the smaller subset of electrical loads needed to "cope" with the reactor post accident for a three day period with no on site or offsite electrical power available; inverter load management (shedding) will be required to stretch the battery capacity for the required three days.

7.1.4 System Operation

EPD operates in three normal modes throughout plant startup, normal operation, normal and emergency shutdown, and during plant outages. In the normal mode of operation, the plant non-safety-related buses and two divisions of safety-related buses are supplied normal preferred power from the plant main generator (if on-line) and/or the main offsite transmission system through the main step-up transformers. The one remaining division of safety-related buses is supplied alternate preferred power through RAT-2.

7.1.4.1 Offsite Power System Operation

During plant startup, normal and emergency shutdown, and during plant outages, the offsite power system supplies power from the offsite transmission systems to the plant onsite power system.

The offsite power system supplies the preferred power to the plant medium voltage busses as follows:

1. **Normal Preferred Power** to the PG and PIP buses (A1 through D1 and A2 through D2) is supplied via the plant main and unit auxiliary transformers.
2. **Alternate Preferred Power** to the PG and PIP buses is available through the reserve auxiliary transformer but not used unless the normal preferred power circuits are being maintained.

The main generator breaker allows EPD to be powered continuously and unswitched throughout plant startup, normal operation, and normal or emergency shutdown. When the generator breaker is tripped, power to the plant unit auxiliary transformers is through the main step-up transformers

via the normal preferred power circuits, unless the EPD has transferred to the alternate source of power.

During plant startup, normal operation, normal and emergency shutdown the alternate preferred power circuits of EPD are available to supply an alternate source of power from the reserve transformer switchyard to the medium voltage PG and PIP busses in order to continue operation or effect a cold shutdown in the event of loss of the plant's normal offsite power source.

During plant outages, the alternate preferred power circuits of EPD are available as necessary to supply an alternate source of power to maintain cold shutdown. The alternate preferred power circuits from the reserve transformers may supply power to the PG buses in the event of unavailability of normal preferred power.

During a LOOP condition, the PG and PIP bus loads will be disconnected when undervoltage is sensed by voltage relays located at each bus. The standby emergency diesel generators will automatically start and sequentially load predefined PIP loads and the emergency busses.

During station blackout (SBO) conditions, the non-class 1E emergency diesel generators serve as an independent AC power source supplying power to Class 1E buses and loads.

7.1.4.2 Onsite Power System Operation

During plant startup, normal operation, normal and emergency shutdown, and during plant outages, the onsite power system serves to supply power from:

1. Normal and alternate preferred power circuits of the offsite power system to the medium voltage and low voltage systems and their loads.
2. The onsite non-1E standby emergency diesel generators to their respective PIP and Class 1E busses and loads.

It should be specifically noted that no planned or unplanned plant transient like a turbine trip, generator load rejection, full isolation or loss of main switchyard will result in any of the plant's PG or PIP busses losing power. Even the event of both switchyards losing power and resulting in a total loss of offsite power will not cause the loss of power to the PIP busses or safety busses. It requires at least two failures for the ESBWR to lose power to any busses and multiple additional failures for the PIP or safety busses to lose power.

The non-1E emergency diesel generators provide a separate onsite source of power for each medium voltage PIP buss and Class 1E division when normal or alternate preferred power and automatic fast-transfer supplies are not available. The transfer from the normal preferred or alternate preferred power supplies to the emergency diesel generators is automatic. The transfer back to the normal preferred or alternate preferred power supply is manual.

During LOOP sensed at the PIP busses the connected motor loads are tripped and the onsite non-1E emergency diesel generators will automatically start, connect to their respective PIP busses and Class 1E busses; the PIP loads are sequenced and the 1E loads are powered as soon as buss voltage stabilizes.

During LOCA without LOOP, the onsite non-1E emergency diesel generators automatically start but do not connect to their respective PIP and Class 1E busses. The buses are automatic fast-transferred to the fast-transfer alternate preferred source without interruption of loads.

During a LOCA with LOOP, the non-Class 1E motor loads are tripped, the non-1E emergency diesel generators automatically start and are connected to their respective PIP and class 1E busses, the PIP loads are sequenced and the 1E loads are powered as soon as buss voltage stabilizes.

7.1.4.3 Bus Transfer Description

The medium voltage distribution system is provided with buss transfer capabilities as follows:

Fast Buss Transfer

1. **Automatically initiated** - In this method, the type of fast transfer used involves issuing simultaneous trip and close commands to the outgoing and incoming power supply breakers on the PG and PIP busses. Fast transfer closings are supervised by a high-speed sync-check relay to assure that the phase angle between the bus and the incoming supply voltage is within acceptable limits during the closing. This type of fast transfer is open transition with respect to the time difference between the supply breaker opening and the other breaker closing; although it is open transition, it is still a live bus transfer. Automatic initiation is caused by per buss undervoltage relays or protective relay trips.
2. **Manually initiated (synchronized)** - In this method, a buss standby power source (i.e. a standby emergency diesel generator) is synchronized with one of the preferred (normal or alternate) power supplies during the transfer period. Synchronized transfers are controlled by automatic synchronizing relays. This assures that the phase angle between the standby power source and the bus (or incoming supply) voltage is within acceptable limits during the closing. Synchronized transfers are completed “slow” for the PIP busses. Completion of the “slow” transfer requires the operator to manually trip the outgoing breaker. Standby emergency diesel generator parallel operation is allowed with the preferred source for the purpose of standby generator exercise and testing.

Dead-Bus Transfer

Automatic or Manually Initiated - Dead-bus transfers use the residual voltage method; this method involves waiting until the PG or PIP bus voltage drops below a predetermined level before closing the incoming supply breaker. Dead-bus transfers are supervised by relays measuring the bus residual voltage to ensure that the voltage is below 0.30 per unit. Dead-bus transfers may be manual or automatic (i.e., initiated by loss of power).

Power generation busses (A1, B1, C1 and D1) have the capability for:

1. Fast transfer (automatically and manually initiated from normal to alternate preferred power supplies and vice versa). Only one PG bus per reserve transformer is allowed to

fast transfer in the normal to alternate direction but the transfers are unlimited in the alternate to normal direction.

2. Manual dead-bus transfer between the normal preferred and alternate preferred power supplies.

Plant investment protection busses (A2, B2, C2 and D2) have the capability for:

1. Fast transfer (automatically and manually initiated from normal to alternate preferred power supplies and vice versa); transfers are unlimited in either direction.
2. Manual dead-bus transfer between the normal preferred and alternate preferred power supplies.
3. Synchronized "slow" transfers to/from the associated non-1E standby emergency diesel generator from/to any of the normal or alternate preferred power supplies.
4. Automatic dead-bus transfer to the associated non-1E standby emergency diesel generator.

Emergency busses (A31, B31, C31 and D31) each have the capability for:

1. A power feed that has been automatically or manually fast or slow transferred "upstream" of the safety busses. This insures that the busses will automatically receive whatever power is available from the normal or alternate preferred power supplies or the non-1E emergency diesel generators.
2. Manually transferable power feeds to the 1E busses between supply transformers
3. Manually transferable power feeds to the 1E busses from a portable and external power source.

7.1.5 Trip Setpoints

There are no trip points associated with the plant electrical power distribution system other than those of the normal protective relaying chosen for the plant. The nominal trip setpoints for the detection of undervoltage and buss transfer initiations is 70%. The nominal trip setpoints to confirm lack of buss voltage for dead bus transfer permissives is 30%.

7.1.6 Testing and Inspection Requirements

Provision is made to test the non-1E diesel generators at their rated loads while the plant is running.

Any one PG or PIP buss can be taken out of service for tests, maintenance or inspection while the plant is running

Any one safety buss can be taken out of service (with a two week LCO) for tests, maintenance or inspection while the plant is running.

Any one 1E or non-1E battery may be taken out of service for tests, maintenance, inspection, equalization or cell replacement while maintaining continuity of the DC loads.

Any one 1E or non-1E uninterruptible power system may be taken out of service for tests, maintenance, or inspection while maintaining continuity of the AC loads.

7.1.7 Instrumentation Requirements

7.1.7.1 Special Features

Unit synchronization is normally through the generator circuit breaker. Synchronization is performed by the turbine control system; and may be automatic or supervised manual. In addition, provisions are made to synchronize the unit through the switchyard circuit breakers.

All relay schemes used for protection of the offsite power circuits associated with the switching station's equipment are redundant and include backup protection features. All switchyard breakers receiving or supplying power to the plant are equipped with dual trip coils. Each redundant protection circuit which supplies a trip signal is connected to a separate trip coil. All equipment and cabling associated with each redundant system are electrically isolated and/or physically separated to the extent practical.

The DC power needed to operate redundant protection and control equipment of the switchyard equipment is supplied from two separate, dedicated switchyard batteries, each with a battery charger fed from a separate PIP buss. Each battery is capable of supplying the dc power required for normal operation of the switchyard equipment.

The automatic transfer schemes are selected to ensure that the loading of the standby power sources occurs while maintaining voltage and frequency within applicable limits. If the source breaker of a standby power source trips during or after loading, the load shedding and sequential loading schemes will automatically reset to perform as intended in the event the loads are to be reapplied.

7.1.7.2 Instrumentation

Instrumentation is provided both locally and in the main control room to monitor the operating parameters of the EPD over their anticipated ranges of normal and abnormal performance in order to facilitate plant operation and ensure safety; this specifically includes inoperable and bypass status indication provided in the main control room to meet the requirements of Regulatory Guide 1.47.

Provisions are included to monitor frequency and duration of load or component operation via circuit breaker operation by specifically including breaker position status in the plant computer.

Displays in the main control room are provided for indication of the plant net output parameters, as well as main generator output voltage, current, watts, vars, and frequency. Highest available accuracy classes of metering components are provided for monitoring plant net output (grid) parameters.

7.1.7.3 Control

Appropriate manual and automatic controls are provided to maintain the operating parameters of the EPD systems within prescribed operating ranges and, specifically, to permit the following operations:

1. Selecting the most suitable power source for a particular power system.
2. Disconnecting the appropriate loads when normal and alternate preferred power are not available, and
3. The medium voltage PG and PIP allow for synchronized bi-directional remote-manual fast transfers between normal and alternate preferred power supplies.

Local manual switchgear controls are provided in the switchgear rooms for all source and load circuit breakers.

A means of synchronizing the standby power sources to the medium voltage buses is provided to allow for load testing.

Single bus power centers or MCCs fed from redundant supplies are designed to provide electrical interlocking between supply breakers. Split-bus power centers or MCCs are designed to provide mechanical or electrical interlocking between supply breakers and tie breaker.

Thermal overload devices are provided to protect valve motor operators. The devices are used to trip the motor operator when necessary to prevent motor failure and to produce an alarm indicating misoperation. Bypass features provided for the purpose of restricting motor operator protection are indicated in the main control room when in bypass.

7.2 Reactor Trip System

Since many of the ESBWR safety functions do not rely on electrical energy by design, the necessary safety-related instruments and controls are considerably reduced and simplified compared to previous BWR plant designs.

Each individual safety-related system utilizes redundant channels of safety-related instruments for initiating safety action. The automatic decision making and trip logic functions associated with the safety action of several safety-related systems are accomplished by a four-division, separated protection logic system called the Safety System Logic and Control (SSLC). The SSLC integrates the logic for the safety-related protection functions, such as reactor trip, isolation, and emergency core cooling functions. The SSLC multi-divisional system includes divisionally separate panels which house the SSLC equipment for controlling the various safety function actuation devices. The SSLC receives input signals from the redundant channels of safety-related instrumentation, and uses the input information to perform logic functions in making decisions for safety actions. The ESBWR systems which have logic implemented in the SSLC include the Reactor Protection (Trip) System, the Suppression Pool Temperature Monitoring System, the Automatic Depressurization System, the Gravity-Driven Cooling System, the Leak Detection and Isolation System, and the Isolation Condenser System. Divisional separation is also applied to the Essential Multiplexing System (EMS), which provides data highways for the sensor input to the logic units and for the logic output to the system actuators (actuated devices such as valves or pumps).

The reactor trip system consists of the following three systems:

Reactor Protection System (RPS)

The safety-related RPS I&C initiates an automatic reactor shutdown by rapid insertion of control rods (scram) if monitored system variables exceed preestablished limits. This action prevents fuel damage, limits system pressure and thus restricts the release of radioactive material.

Neutron Monitoring System (NMS)

The safety-related NMS monitors the core neutron flux from the startup source range to beyond rated power. The NMS provides logic signals to the RPS to automatically shut down the reactor when a condition necessitating a reactor scram is detected. The NMS is composed of three subsystems:

- startup range neutron monitor (SRNM);
- power range neutron monitor (PRNM); and
- automatic fixed in-core probe (AFIP) (non-safety-related)

The PRNM subsystem includes the local power range monitor (LPRM) and average power range monitor (APRM) functions.

Suppression Pool Temperature Monitoring System (SPTMS)

The safety-related SPTMS is provided to monitor pool temperatures under all operating and accident conditions. The system is manually initiated and continuously operates during reactor operation. Should the suppression pool temperature exceed established limits, the SPTMS provides input for automatic initiation.

7.2.1 Reactor Protection System (RPS)

7.2.1.1 RPS Description

7.2.1.1.1 RPS Identification

The RPS is the overall complex of instrument channels, trip logics, trip actuators, manual controls and scram logic circuitry that initiate rapid insertion of control rods (scram) to shut down the reactor for situations that could result in unsafe reactor operating conditions. The RPS also establishes appropriate interlocks for different reactor operating modes and provides status and control signals to other systems and annunciators. To accomplish its overall function, the RPS interfaces with the Essential Multiplexing System (EMS), Safety System Logic and Control System (SSLC), Neutron Monitoring System (NMS), Nuclear Boiler System (NBS), Control Rod Drive System (CRD), Suppression Pool Temperature Monitoring System (SPTMS), Rod Control and Information System (RC&IS), Leak Detection and Isolation System (LD&IS), Isolation Condenser System (ICS), Performance Monitoring and Control System (PMCS) and with other plant systems and equipment.

7.2.1.1.2 RPS Classification

The RPS is classified as a safety-related system. All functions of the RPS and of the components of the system are safety-related unless otherwise indicated. The RPS and the electrical equipment of the system are also classified as Seismic Category I and as IEEE electrical category Class 1E.

7.2.1.1.3 Power Sources

The RPS utilizes three types of electrical power. Four divisions of vital (uninterruptible) 125 Vdc are used as the primary power source for the SSLC cabinets in which major portions of the RPS are located. Two divisions of 120 Vac are also used as the power sources for the solenoids of the scram pilot valves. Regulated low voltage dc power from power supplies within the SSLC cabinets is used by solid-state logic components of the RPS. Two divisions of the four divisions of 125 Vdc power are used for powering the backup scram valves solenoids, for scram reset permissive logic, and for initiation logic for the scram-follow operation of the non-safety-related CRD System drive motors.

7.2.1.1.4 RPS Equipment Design

The RPS is designed to provide reliable single-failure-proof capability to automatically or manually initiate a reactor scram while maintaining protection against unnecessary scrams resulting from single failures. The RPS remains single-failure-proof even when one entire division of channel sensors is bypassed and/or when one of the four automatic RPS trip logic systems is out-of-service. This is accomplished through the combination of fail-safe equipment design, the redundant two-out-of-four sensor channel trip decision logic, and the redundant two-out-of-four trip systems output scram logic arrangement utilized in the SSLC/RPS design.

All equipment within the RPS and within the RPS-related portions of the SSLC System is designed to fail into a trip initiating state on loss of power, loss or disconnection of any input signal, or loss of any internal or external device-to-device connection signal. In conjunction with this fail-to-safe-state design, the trip initiating logic signals to and within the RPS are asserted low (i.e., “0” to scram), whereas trip bypass logic signals and trip bypass permissive logic signals are asserted high (i.e., “1” to bypass and “0” to release bypass).

7.2.1.1.4.1 Arrangement

The RPS-related equipment is divided into four redundant divisions of sensor (instrument) channels, trip logics and trip actuators, and two divisions of manual scram controls and scram logic circuitry. The sensor channels, divisions of trip logics, divisions of trip actuators, and associated portions of the divisions of scram logic circuitry together constitute the RPS automatic scram and air header dump (backup scram) initiation logic. The divisions of manual scram controls and associated portions of the divisions of scram logic circuitry together constitute the RPS manual scram and air header dump initiation logic. The automatic and manual scram initiation logics are independent of each other and use diverse methods and equipment to initiate a reactor scram. Equipment arrangement is shown in Figure 7.2-1.

Sensor Channels - Equipment within a sensor channel consists of sensors (transducers or switches), multiplexers, and digital trip modules (DTMs). The sensors within each channel monitor for abnormal operating conditions as indicated below and send analog (or discrete) output to Local Multiplexer Units (LMUs) within the associated division of Essential Multiplexing System (EMS). Each division of EMS performs analog-to-digital conversion on analog signals and sends the digital or digitized analog output values of the monitored variables to the DTM within the associated RPS sensor channel in the same division. The DTM in each sensor channel compares individual monitored variable values with trip setpoint values and for each variable sends a separate, discrete (trip/no trip) output signal to Trip Logic Units (TLUs) in all four divisions of trip logics. The DTMs and TLUs are microprocessors and components of the SSLC System. However, the software associated with RPS channel trip and trip system coincident logic decisions that is installed in these SSLC microprocessors are RPS unique. The number of channels utilized in the functional performance of RPS are shown in Table 7.2-1.

All EMS and SSLC equipment within a single division of sensor channels is powered from the Class 1E power source of the same division. However, different pieces of equipment may be powered from separate low voltage dc power supplies within the panels. Within a sensor channel, the sensors, themselves, may belong to the RPS or may be components of another system. Signal conditioning and distribution performed by the LMUs are functions of the EMS.

Divisions of Trip Logic - Equipment within a RPS division of trip logic consists of manual switches, bypass units (BPUs), trip logic units (TLUs) and output logic units (OLUs). The BPUs, TLUs and OLUs are, in general, components of the SSLC System.

The various manual switches provide the operator with the means to modify the RPS trip logic for special operation, maintenance, testing, and system reset. The bypass units perform bypass and interlock logic for the channel sensors bypass, and the division trip logic unit bypass. These bypasses are manually initiated through administrative-controlled individual keylock switches within each of the four divisions. Each SSLC BPU sends a separate bypass signal for all four channels to the TLU in the same division for channel sensors bypass. Each RPS BPU sends the TLU bypass signal to the RPS OLU in the same division.

The TLUs perform the automatic scram initiation logic, normally checking for two-out-of-four coincidence of trip conditions in any set of instrument channel signals coming from the four-division DTMs or from isolated bistable inputs from all four divisions of NMS, and outputting a trip signal if any one of the two-out-of-four coincidence checks is satisfied. The automatic scram initiation logic for any one trip unit is based on reactor operating mode and channel trip conditions and bypass conditions. Each TLU, besides receiving isolated bistable input trip signals from all four divisions of RPS-related DTMs, also receives bistable input signals from the BPU and various switches in the same division.

The OLUs perform division trip, seal-in, reset, and trip test function. Each OLU receives bypass inputs from the RPS BPU, trip inputs from the TLU of the same division, and various manual inputs from switches within the same division. Each OLU provides discrete trip outputs to the trip actuators in the same division. Each OLU also receives an isolated discrete division trip reset permissive signal from equipment associated with one of the two divisions of air header dump (backup scram) initiation logic circuitry.

All equipment within a division of trip logic is powered from the same division of Class 1E power source. However, different pieces of equipment may be powered from separate low voltage dc power supplies. The BPU, TLU and OLU within a division must each be powered from separate dc power supplies.

Divisions of Trip Actuators - Equipment within a division of trip actuators includes isolated load drivers and relays for automatic scram and air header dump initiation. Each division of trip actuators receives discrete trip inputs from the OLU in the same division. The isolated load drivers are fast response time, bistable, solid-state, 120 Vac current-interrupting devices that can tolerate the high current levels associated with hydraulic control unit (HCU) scram solenoids operation. The operation of the load drivers is such that a trip signal (logic “0” voltage level) on the input side will create a high impedance, current interrupting condition on the output side. The output side of each load driver is electrically isolated from its input signal. The load driver outputs are arranged in the scram logic circuitry between the scram solenoids and scram solenoid 120 Vac power source such that, when in a tripped state, the load drivers will cause de-energization of the scram solenoids (scram initiation). All load drivers within a division interconnect with load drivers in all other divisions into two separate arrangements which result in two-out-of-four scram logic (i.e., reactor scram will occur if load drivers associated with any two or more divisions receive trip signals) (Figure 7.2-1).

Normally closed relay contacts are arranged in the scram logic circuitry between the air header dump valve solenoids and air header dump valve solenoid 125 Vdc power source such that, when in a tripped state (coil de-energized), the relays will cause energization of the air header dump valve solenoids (air header dump initiation). The relay contacts of all relays within a division interconnect with the relay contacts of relays in all other divisions into two separate two-out-of-four air header dump logic arrangements (Figure 7.2-1). Associated dc relay logic is also utilized to effect scram reset permissives and scram-follow initiation.

Divisions of Manual Scram Controls - Equipment within a division of manual scram controls includes manual switches, contactors, and relays that provide an alternate, diverse, manual means to initiate a scram and air header dump. Each division of manual scram controls interconnects the actuator load power sources to the same division of scram logic circuitry for scram initiation and to both divisions of scram logic circuitry for air header dump initiation.

Divisions of Scram Logic Circuitry - One of the two divisions of scram logic circuitry distributes 120 Vac power to the A solenoids of all HCUs and 125 Vdc power to the solenoid of one of the two air header dump valves. The other division of scram logic circuitry distributes 120 Vac power to the B solenoids of all HCUs and 125 Vdc power to the solenoid of the other air header dump valve. The HCUs (which include the scram pilot valves and the scram valves) and the air header dump (backup scram) valves are, themselves, components of the CRD Hydraulic Control System. The arrangement of equipment groups within the RPS from sensors to actuator loads is shown in the RPS Instrument and Electrical Diagram (IED). All logic associated with the RPS, including channel, division trip system, and actuating elements trip logic, and all operational and maintenance bypass logic, as well as other interlocks with interfacing systems, is shown on the RPS Logic Diagram (LD).

7.2.1.1.4.2 Initiating Circuits

The RPS software logic will initiate reactor scram in the individual sensor channels when any one or more of the conditions listed below exist within the plant during different conditions of reactor operation. The system monitoring the process condition is indicated in brackets.

- High Drywell Pressure [RPS]
- NMS-monitored SRNM and APRM conditions exceed acceptable limits [NMS]
- High Reactor Pressure [NBS]
- Low Reactor Water Level (Level 3) [NBS]
- High Reactor Water Level (Level 8) [NBS]
- Main Steam Line Isolation (MSLI) (RUN mode only) [NBS]
- Low Control Rod Drive Charging Header Pressure [CRD System]
- High Suppression Pool Temperature [SPTM System]
- Operator-initiated Manual Scram [RPS]

With the exception of the NMS outputs and the MSLI and Manual Scram outputs, which are provided directly to the RPS by hard-fiber-optic or hard-wired signals, the majority of these systems provide sensor outputs through the EMS. Analog-to-digital conversion of these sensor output values is done by EMS equipment. The systems and equipment that provide trip and scram initiating inputs to the RPS for these conditions are discussed in the following subsections.

7.2.1.1.4.3 Neutron Monitoring System (NMS)

Separate, isolated, bistable Startup Range Neutron Monitor (SRNM) trip signals and bistable Average Power Range Monitor (APRM) trip signals from each of the four divisions of NMS equipment are provided to all four divisions of RPS trip logic, as shown on the RPS IED.

SRNM Trip Signals - The SRNM subsystem provides trip signals to the RPS to cover the range of plant operation from source range through startup range (i.e., more than 10% of reactor rated power). Three SRNM conditions, monitored as a function of the NMS, comprise the SRNM trip logic output to the RPS. These conditions are as follows:

- SRNM upscale (high count rate);
- short (fast) period; and
- SRNM inoperative.

The three trip conditions from every SRNM associated with the same NMS division are combined into a single bistable SRNM trip signal for that division. This combined trip signal from each NMS division is provided separately, by isolated means, to each of the four SSLC TLUs associated with the four separate RPS trip systems. The specific condition that causes the SRNM trip output state is identified by the NMS and is not detectable within the RPS.

APRM Trip Signals - The APRMs provide trip signals to the RPS to cover the range of plant operation from a few percent to greater than rated power. Three APRM conditions, monitored as a function of the NMS, comprise the APRM trip logic output to the RPS. These conditions are as follows:

- APRM high neutron flux;
- high simulated thermal power; and
- APRM inoperative.

The three APRM trip conditions are combined into a single bistable APRM trip signal in each NMS division. The APRM combined trip signal from each NMS division is provided separately, by isolated means, to each of the four SSLC TLUs associated with the four separate RPS trip systems.

7.2.1.1.4.4 Nuclear Boiler System

Reactor Pressure - Reactor pressure is measured at four physically separated locations by pressure transmitters mounted on separate divisional local racks in the safety envelope within the

reactor building. Each transmitter is on a separate instrument line and is associated with a separate RPS electrical division. Each transmitter provides an analog equivalent output through the EMS to the appropriate SSLC DTM in one of the four RPS divisional sensor channels. The four pressure transmitters and associated instrument lines are components of the NBS.

Reactor Water Level - Narrow range reactor water level is measured at four physically separated locations by level (differential pressure) transmitters mounted on separate divisional local racks in the safety envelope within the reactor building. Each transmitter is on a separate pair of instrument lines and is associated with a separate RPS electrical division. Each transmitter provides analog equivalent output through the EMS to the appropriate SSLC DTM in one of the four RPS divisional sensor channels. The four level transmitters and associated instrument lines are components of the NBS.

Main Steam Line Isolation - Each of the two main steam lines can be isolated by closing either its inboard or outboard isolation valve. Position (limit) switches mounted on both isolation valves of each main steam line provide bistable outputs which are hard-wired to the appropriate SSLC DTM in one of the four RPS divisional sensor channels. Two position switches are mounted on both the inboard and the outboard isolation valves of each main steam line. Each of the two position switches on any one main steamline isolation valve is associated with a different RPS divisional sensor channel. The four MSIVs and the eight position switches supplied with these valves for RPS use are components of the NBS.

7.2.1.1.4.5 Control Rod Drive (CRD) System

Charging header pressure is measured at four physically separated locations by locally mounted pressure transmitters. Each transmitter is associated with a separate RPS division and is on a separate instrument line. Each transmitter provides analog equivalent output through the EMS to the appropriate SSLC DTM in one of the four RPS divisional sensor channels. The four pressure transmitters and associated instrument lines are components of the CRD System.

7.2.1.1.4.6 Suppression Pool Temperature Monitoring System (SPTMS)

Four channels of Class 1E divisional thermocouples provide the suppression pool temperature data for automatic scram initiation. When the established limits of high temperature are exceeded in two of the four divisions, a scram initiation and indication signals are generated.

7.2.1.1.4.7 Reactor Protection System

Drywell Pressure - Primary containment (drywell) pressure is measured at four physically separated locations by pressure transmitters located on separate divisional local racks in the safety envelope within the reactor building. Each transmitter is on a separate instrument line and is associated with a separate RPS electrical division. Each transmitter provides analog equivalent output through the EMS to the appropriate SSLC DTM in one of the four RPS division sensor channels. The four pressure transmitters and associated instrument lines are components of the RPS.

Manual Scram - Two manual scram switches and the reactor mode switch provide the means to manually initiate a reactor scram independent of conditions within the sensor channels and divisions of trip logics and trip actuators. Each manual scram switch is associated with one of the divisions of actuator load power.

7.2.1.1.4.8 RPS Outputs to Interfacing Systems

Auto Scram Signals to the CRD System (C12) - Reactor trip conditions existing in any two or more of the four RPS automatic trip systems and/or in both RPS manual trip systems cause the output circuits of the RPS, normally supplying power to the solenoids of all of the scram pilot valves of the CRD System, to be disconnected from power, thus resulting in reactor emergency shutdown.

At the same time that the scram pilot valve solenoids are disconnected from power, the two scram air header dump valves of the CRD System (backup scram valves) are supplied with power such as to block air supply and exhaust all air from the scram air header, resulting in backup scram action.

RPS Status Outputs to the NMS (C51) - Two types of RPS status condition signals (four combined signals each, one per division) are provided to the NMS by the RPS. Isolated output signals, indicating that the Reactor Mode Switch is in the RUN mode position, are provided to all four divisions of the NMS whenever the mode switch is in that position. These signals are used by the NMS to bypass the NMS SRNM alarm and trip functions whenever the mode switch is in the RUN mode position. Also, each of four separate isolated output signals that indicate when the RPS Coincident/Non-coincident Switch of any particular RPS division is in the NON-COINCIDENT mode position is provided to that same division of the NMS.

Scram-Following Signals to the RC&IS (C11) - Upon the occurrence of any full reactor scram condition, the RPS provides isolated output signals to the Rod Control and Information System (RC&IS). This enables automatic rod run-in (scram-following) logic in the RC&IS, resulting in full insertion or run-in of all fine motion control rod drives subsequent to scram. The RPS also provides scram test switch status to the RC&IS, indicating the start of a pair-rod scram test.

Rod Block Signals to the RC&IS (C11) - Rod withdrawal inhibit signals (one for each division) are provided by the RPS by isolated output signals sent to the RC&IS whenever any CRD charging pressure trip bypass switch is in the BYPASS position.

Readout Meters or Displays - Instrument channel sensor checks are capable of being performed at the main control console. Displays exist for readout and comparison of the current values of each set of four (one per division) of the different variables or separate processes being monitored.

Outputs to the LD&IS (C21) - Drywell pressure output signals as obtained from the RPS sensors (one for each division) are provided by means of the EMS to the Leak Detection and Isolation System (LD&IS) to be utilized for reactor coolant pressure boundary and primary

containment leakage alarm and isolation functions of the LD&IS. Also, reactor mode switch status channels A,B,C,D signals from each trip division are provided.

Annunciators - Alarms that are annunciated and displayed are produced at the main control console by the trip condition of any of the four sensor trip channels of each scram variable being monitored and by the trip condition of each automatic or manual trip system. Alarms are also generated when scram functions are bypassed or when components of the RPS are taken out of service. The RPS provides isolated signal outputs for these alarm functions.

The following alarms related to RPS status are provided:

- RPS NMS trip;
- reactor vessel pressure high;
- reactor water level low (≤ Level 3);
- reactor water level high (≥ Level 8);
- containment (drywell) pressure high;
- main steam line isolation (MSLI) trip;
- CRD HCU accumulator-charging-header-pressure low;
- suppression pool temperature high;
- RPS divisional automatic trip (auto-scram) (each of the four, i.e., Div. I, II, III and/or IV automatic trip);
- RPS divisional manual trip (each of the four, i.e., Div. I, II, III and/or IV manual trip);
- manual scram trip (two: both Manual A and/or Manual B);
- Mode switch in SHUTDOWN;
- SHUTDOWN mode trip bypassed;
- NON-COINCIDENT NMS trip mode in effect;
- some NMS trip mode selection switch still in NON-COINCIDENT position with plant in RUN mode;
- division of channel A (or B, C or D) sensors bypassed (four);
- tripped conditions in Division I (or II, III, IV) and Division I (or II, III, IV) sensors bypassed (four);
- Division I (or II, III or IV) TLU out-of-service bypass (four);
- CRD accumulator-charging, header-pressure, low trip bypass;

- any CRD accumulator-charging, header trip, bypass switch still in BYPASS position with plant in STARTUP or RUN mode.
- auto-scram test switch in TEST mode (manual trip of automatic logic) (four).

Outputs to Process Computer System (C91) - The trip status of all individual instrument channel detector trips and of all trip systems are logged by the Process Computer System. The RPS provides isolated signal outputs for these computer logging functions.

Both the tripped and reset (no-trip) conditions of the RPS-related sensor instrument channels and the tripped and reset conditions of RPS automatic and manual trip systems are logged by the Process Computer System. For all conditions that cause reactor trip, the computer identifies the specific trip variable, the divisional channel identity, and the specific automatic or manual trip system.

Outputs to the Isolation Condenser (IC) System (B32) - Reactor mode switch status (i.e., RUN/NOT-RUN indications) from all four divisions is provided by the RPS to the Isolation Condenser System to be used as automatic operation signal permissives whenever the Reactor Mode Switch is placed in the STARTUP and RUN mode positions or used as automatic operation signal inhibits whenever the Reactor Mode Switch is placed in any of the three remaining NOT-RUN mode positions.

7.2.1.2 RPS Design Basis

The Reactor Protection System (RPS) meets the following functional requirements:

(1) To initiate prompt and safe shutdown of the reactor (also known as reactor trip) by means of rapid emergency hydraulic insertion of all control rods (scram). Such action is required:

   (a) When transient anomalous states occur which may impair reactor safety, and

   (b) When errors in operation take place (or when such situations are anticipated to develop).

(2) To provide timely protection against the onset and consequences of conditions that threaten the integrity of the reactor fuel barriers, the reactor coolant pressure boundary, or the primary containment vessel pressure boundary.

(3) To initiate an automatic reactor trip whenever monitored process variables exceed or fall below their specified trip setpoints, based on values determined by transient and accident analyses and instrument setpoint calculation methodology.

(4) To provide manual control switches for initiation of reactor scram by the plant operator when necessary.

(5) To provide mode selection for enabling the appropriate instrument channel trip functions required in a particular mode of plant operation. Mode selection also provides for

bypassing instrument channel trip functions that are not required, and for establishing all other necessary interlocks associated with the major plant operating modes.

(6) To provide selective automatic and manual operational trip bypasses, as necessary, to permit proper plant operations. These bypasses allow for protection requirements that depend upon specific existing or subsequent reactor operating conditions.

(7) To provide seal-in of specific trip logic paths once trip conditions have been satisfied and also to inhibit the trip reset states, as necessary, to permit any subsequent required protective action sequences to be completed.

(8) To provide manual reset capability to permit the restoration of the RPS, and other affected systems, to their normal operational status following the seal-in of any trip logic path or after a full reactor scram.

(9) To provide isolated outputs to other systems that share instrument channel signals with the RPS, use trip conditions generated by the RPS, or require other indications of specific RPS status for their inputs.

(10) To provide isolated outputs to appropriate warning, trip or bypass alarm annunciators, to operator displays (e.g., flat panel or cathode ray tube CRT displays), and to the process computer.

(11) To provide means for calibration and adjustment of trip function setpoints and provide sufficient controls to permit surveillance and post-maintenance testing of RPS equipment.

The following bases assure that the RPS is designed with sufficient reliability:

(12) Single failures, bypasses, repairs, calibration or adjustments will neither impair the normal protective functions of the RPS nor will they result in a reactor scram or insertion of the control rods in one or more control rod scram groups. The RPS is capable of accomplishing its safety-related protection functions in the presence of any single failure within the RPS, all failures caused by the single failure, and all failures caused by any design basis event that requires RPS protective action.

(13) The RPS is designed to maintain safe conditions even during system shutdown and loss of electrical power sources.

(14) The RPS will fail into a safe state if conditions such as disconnection of the system or portions of the system, loss of electrical power, or adverse environment are experienced.

(15) Loss of a single power source directly associated with RPS equipment and protection functions will not cause sufficient instrument channel trips or division trips or solenoids de-energized to result in full reactor scram or insertion of the control rods of any of the four scram groups.

(16) The RPS protective actions that have been automatically or manually initiated will continue in their intended sequence until completed (i.e., until reactor scram signals are

output from the RPS, and actuated devices, such as HCU control rods, have completed their safety-related function). RPS output scram signals are maintained until completion of control rod insertion.

(17) The RPS has built-in redundancy in its design that satisfies the reliability and availability requirements of the system.

(18) Availability is enhanced by providing bypass capability for failed portions of each division's equipment without degrading operability.

(19) A separate and diverse manual trip method is provided in the form of two manual trip systems. Actuation of both manual trip systems is required for a full reactor scram.

(20) Physical separation and electrical isolation between redundant portions of RPS is provided by separated process instrumentation, separated racks, and either separated or protected panels and cabling.

7.2.1.3 RPS Testing and Inspection Requirements

7.2.1.3.1 System Testing: Operational Verifiability

The RPS is designed so that its individual operating elements can be periodically and independently tested to demonstrate that RPS reliability is being maintained.

The RPS design (and the design of other systems providing the RPS with instrument channel inputs) permits verifying, with a high degree of confidence, and during reactor operation, the operational availability of each of the input sensors utilized by the RPS (i.e., channel checks).

The instrument channels will be periodically calibrated and adjusted to verify that necessary precision and accuracy is being maintained. Such periodic checking and testing during plant operation is possible without loss of scram capability and without causing an inadvertent scram.

All safety-related RPS equipment is designed to allow inspection and testing during periodic shutdowns of the nuclear reactor and during refueling shutdowns.

7.2.1.3.2 Surveillance Testing and In-Service Inspection

The RPS equipment testing includes the following:

- equipment qualification testing;
- pre-operational, startup and refueling/outage inspection testing; and
- in-service and operational surveillance testing.

Surveillance Testing - The RPS shall be designed to permit testing of emergency reactor shutdown by methods simulating actual plant operation and duplicating, as closely as possible, the performance of all protective actions, even during reactor operation. These test methods shall support in-service verification of scram capability with high reliability. To the extent practicable, the RPS components (and testing strategies) shall be designed so that all identifiable failures are detectable. Test methods shall be designed to facilitate the recognition and location of malfunctioning components so that they may be replaced, adjusted, or repaired. The following surveillance testing shall be performed:

- Channel Checks: Cross comparison of values of analog scram variables, permitting verification of operational availability of sensor instrument channel.
- Detector Actuation Tests: Simulated signals input to the individual detectors or sensor channels for all RPS-related instrumentation channels which are capable of initiating a reactor scram, permitting the trip channels to be tested or calibrated and setpoints to be verified.
- Trip System Logic Tests and Trip Actuator Tests: Simulated scram signals, permitting trip system logic to be tested. System outputs toggle, permitting operation of the trip actuators to be tested.
- Paired-Control-Rods Scram Tests: Switches are installed in the main control room to permit testing of the fast scram operation of the individual pairs of control rods and to confirm, when necessary, that the individual control rods have scrammed.

Test Intervals - Suitable test intervals for performing in-service tests of the RPS sensor instrument channels and the RPS trip actuators (i.e., load drivers, relays and contactors) are provided in the plant technical Specifications.

Coincident Logic Tests - Testing of coincident two-out-of-four (or one-out-of-four, twice) trip logic will verify each combination of trip conditions for each set of input scram variables in an RPS trip channel. Testing will also verify each output logic combination of trip conditions in the four RPS trip systems. This testing will be performed in accordance with the plant technical specifications.

7.2.1.4 RPS Instrumentation and Control

7.2.1.4.1 Automatic Scram Variables

Refer to Nuclear Boiler System (Subsection 7.2.1.1.4.4) for the automatic scram initiating circuits and the systems which supply to them.

7.2.1.4.2 Automatic and Manual Bypass of Selected Scram Functions

7.2.1.4.2.1 Operational Bypasses

Manual or automatic bypass of certain scram functions permits the selection of suitable plant protection conditions during different conditions of reactor operation. These RPS operational bypasses are mode changes that inhibit actuation of some scram functions which are not required for a specific state of reactor operation.

The conditions of plant operation that require automatic or manual bypass of certain reactor trip functions are described below:

Bypass of scram trip for CRD-accumulator-charging-header low pressure after scram has occurred (alarmed operational bypass) - To permit scram reset, four administratively controlled (by keylock or other appropriate means) trip bypass switches are installed in the main control room. When the reactor mode switch is placed in either the SHUTDOWN or the REFUEL mode position after a reactor scram, and when the four trip bypass switches are placed in their bypass position, the tripped states of the logic associated with the CRD-accumulator-charging-header low pressure scram function are bypassed in each RPS trip system. This operational bypass condition is annunciated in the main control room.

The bypass is automatically removed whenever the reactor mode switch is put in either STARTUP or RUN mode, whether or not any bypass switch remains in the BYPASS position. However, a separate alarm will actuate in the main control room if any of the bypass switches are left in the bypass position when the reactor mode switch is in either STARTUP or RUN mode. Rod withdrawal inhibit signals are sent to the RC&IS whenever any CRD charging pressure trip bypass switch is in the bypass position.

Bypass of scram trip for main steam isolation valve closure (alarmed operational bypass) - The MSIV closure scram trip function is automatically bypassed whenever the reactor mode switch is in either the SHUTDOWN, REFUELING or STARTUP mode position. This bypass condition is annunciated in the main control room. The bypass is automatically removed if the reactor mode switch is moved to the RUN mode position.

Bypass of scram trip on account of mode switch in SHUTDOWN position (alarmed operational bypass) - The RPS trip caused by the reactor mode switch being placed in the SHUTDOWN mode position is automatically bypassed after a period lasting approximately 10 seconds. This bypass permits resetting of the trip actuators and re-energization of the scram pilot valve solenoids.

Bypass of NMS SRNM trip functions in RUN mode (not alarmed) - Whenever the reactor mode switch is in the RUN mode, all SRNM reactor scram trip functions are automatically bypassed. However, this bypass is not alarmed, since it is the normal condition in the RUN mode. The SRNM rod block functions are also disabled when the reactor mode switch is in the RUN mode.

Bypass of non-coincident NMS trips in RUN mode - Whenever the reactor mode switch is in the RUN mode position, and if any of the four coincident/non-coincident NMS trip selection switches remain in the NON-COINCIDENT position, the non-coincident NMS scram trip functions are automatically disabled (bypassed) in any of the four RPS trip systems so affected.

The non-coincident NMS trip function is required while core alterations are occurring during initial fuel loading and subsequent refueling operations. During such core alterations, the Reactor Mode Switch will be in the REFUEL mode position (or for certain testing conditions, when in the SHUTDOWN or STARTUP mode positions).

The non-coincident NMS trip function is automatically removed when the reactor mode switch is in the RUN mode position.

If any coincident/non-coincident NMS trip selection switch is in the NON-COINCIDENT position when the reactor mode switch is in the RUN mode, this abnormal condition will actuate an alarm in the main control room.

7.2.1.4.2.2 Maintenance Bypasses

Manual bypass capability is provided to allow certain portions of RPS-related equipment to be taken out of service for maintenance, repair or replacement. Maintenance bypasses may reduce the degree of redundancy of RPS scram functions, but will not eliminate any scram function. All protection functions are available while any RPS equipment is in maintenance bypass. Except where indicated otherwise, any maintenance bypass will generate a status alarm at the main control room operator's console.

The following maintenance bypasses are provided:

Bypass of detector inputs (division-of-channel-sensors bypass) (alarmed maintenance bypass) - An individual bypass switch is associated with each of the four electrical divisions. Interlocks are included in the design which prevent more than one division of channel sensors from being bypassed at the same time. Whenever a division of channel sensors bypass switch is placed in the bypass position, annunciation will occur in the main control room with indication as to which division of channel sensors has been bypassed.

This bypass permits any of the safety-related RPS components of the input sensor channels of one division to be repaired, replaced or maintained, off-line, to provide a minimum susceptibility to a spurious reactor scram and with only slightly reduced system reliability.

RPS trip system output logic bypass TLU output bypass (Division-out-of-service bypass) (alarmed maintenance bypass) - Manually operated, keylocked (or equivalent) bypass switches are installed in the main control room to bypass (take out of service) the RPS trip output logic of one RPS electrical division. This bypass will permit the SSLC RPS trip logic unit (TLU) microprocessor of the associated division to be repaired, replaced or maintained off-line, thus reducing the potential for causing a half-scram.

Four switches are provided, one for each RPS division. Interlocks ensure that the output signals of only one TLU can be bypassed at any one time. When a division-out-of-service bypass switch is placed in the BYPASS position, annunciation will occur in the main control room with indication as to which division is out of service.

With a division-out-of-service bypass in effect, the operator will still be able to manually trip that division.

The division-of-channel-sensors maintenance bypass function and the division-out-of-service maintenance bypass function are independent. Thus, one division of channel sensors may be bypassed (taken out of service at the sensor channels level) and, simultaneously, the same division or any other division may be taken out of service at the RPS trip system level.

Bypass of NMS reactor nuclear instrumentation is not within the scope of the RPS.

7.2.1.4.3 Requirements for Manual Controls

Operator action by means of manual controls is limited to:

- initiation of scram by manual scram switches;
- mode switch operation (results in scram if placed in the SHUTDOWN position);
- reset of automatic trip systems after trip input signals clear;
- reset of manual trip systems (preferably after reset of the automatic trip systems);
- manual bypasses by keylocked (or equivalent) switches for conditions that are specifically permitted; and
- manual initiation of selected trip systems or trip actuators using trip logic test switches.

7.2.1.4.3.1 Mode Switch

A multi-function, multi-bank, keylock-type control switch placed near the plant operator at the main control console provides mode selection for all necessary interlocks associated with the various plant modes; namely, SHUTDOWN, REFUEL, STARTUP, and RUN. The switch provides both electrical and physical separation between the sections associated with each of the four separate divisions of instrument channels and trip systems.

7.2.1.4.3.2 Manual Scram Switches

Two manual scram switches (or the reactor mode switch in SHUTDOWN) permit initiating a scram independent of conditions within other RPS equipment (sensor channels, divisions of trip logic, or divisions of trip actuators). Each manual scram switch is associated with one of the two divisions of actuator load power. Both manual scram switches are located at the main control console.

7.2.1.4.3.3 Manual Divisional Trip Switches

Each of the four RPS automatic trip systems have manual trip capability provided by four keylocked (or equivalent) divisional trip switches which are located on the main control console in positions easily accessible for optional use by the plant operator. Each switch, when momentarily put into its trip position, trips all of the actuators that normally would be tripped by

a scram condition for that division. Thus, operation of one manual divisional trip switch will result in a half-scram condition with automatic seal-in. Note that momentarily operating any two of the four manual divisional trip switches will result in a full manual reactor scram.

7.2.1.4.3.4 Trip Reset Switches

Up to five trip reset switches are placed near the plant operator. These switches reset any or all of the four automatic and two manual scram trip systems that may have been tripped and sealed-in, as follows:

- One trip reset switch resets both manual trip systems simultaneously. The switch circuitry staggers the re-energization of the four groups of scram pilot valve solenoids so that only two groups of "A" and "B" solenoids are re-energized at the same time.
- Four separate trip switches comprise the trip reset function for resetting the sealed-in, automatic trip logic outputs in the four divisions. Thus, physical separation of the four electrical divisions is maintained. All trip reset switches are located on the main control panel.

7.2.1.4.4 Operational Bypass Switches

Requirements for operational bypass switches for RPS safety-related functions are addressed in Subsection 7.2.1.4.2. All operational bypass switches are under administrative control. RPS operational bypass switches are implemented as follows:

- Four trip bypass switches for CRD charging header water pressure; one for each RPS division.
- The Reactor Mode Switch provides several automatic operational bypasses.

7.2.1.4.4.1 Maintenance Bypass Switches

Requirements for RPS-related maintenance bypass switches are addressed in Subsection 7.2.1.4.2. The following maintenance bypasses are implemented:

- four division-of-channel-sensor maintenance bypass switches; and
- four division-out-of-service maintenance bypass switches.

7.2.1.4.4.2 Test Switches

Test switches are provided in the RPS design to aid in surveillance testing during reactor operations.

7.2.1.4.4.3 Coincident/Non-Coincident NMS Trip Selection Switches

Four divisional switches provide selection of either COINCIDENT or NON-COINCIDENT trip logic modes for the SRNM and APRM trip inputs to RPS. The non-coincident trip mode is used for core re-arrangement operations during initial and subsequent fuel loadings.

When all four switches are in their COINCIDENT mode, normal two-out-of-four coincidence trip logic is enabled for both SRNM and APRM scram trip functions.

When all four switches are in their non-coincident mode, a trip condition of any one (unbypassed) SRNM module, or of any one (unbypassed) APRM module, will result in the tripped condition of all four RPS trip systems.

In RUN mode, the "non-coincident" NMS trip function is automatically removed. If any selection switch is still in the NON-COINCIDENT position, an alarm will occur in the main control room. When the reactor mode switch is not in RUN mode, a NON-COINCIDENT mode status for any trip selection switch is alarmed in the main control room by a different, separate alarm.

7.2.1.4.5 Scram Logic

7.2.1.4.5.1 Automatic Scram Trip Logic

Automatic trip logic for reactor emergency shutdown consists of the following elements:

- RPS consists of four independent automatic trip systems that are electrically and physically separated.
- Four sensor instrument channels, which provide four signals per measured variable, and which are separated electrically and physically, are evaluated by setpoint comparison logic for normal or abnormal conditions. Bistable trip/no-trip status signals from each of these four sensor channels are input into all four RPS trip systems, using isolating devices such as fiber-optic cables for electrical isolation between divisions.
- The four bistable trip status signals for each measured variable (with the exception of the main steam line isolation (MSLI) closure measured variable), are evaluated by two-out-of-four trip coincidence logic in each of the four RPS trip systems. The MSLI trip function is evaluated by one-out-of-four, twice, trip logic in each of the four RPS trip systems. If a trip condition is required by a two-out-of-four logic evaluation of one or more variables, or the one-out-of-four, twice, evaluation for the MSLI variable, then trip signals are output from each affected trip system.
- The scram valves of the CRD System associated with each of the four scram groups will be opened, and the reactor scrammed, if trip signals are output from any two (or more) of the four (two-out-of-four) trip systems. A half scram will result if trip signals are output from any one of the four trip systems.
- The automatic trip systems are structured to actuate in a fail-safe manner; i.e., they will trip on loss of power or disconnection of any trip logic component or wiring connection from the normal state (e.g., lifting of a lead or removal of a circuit card).
- Each automatic trip system will seal-in any trip condition. The RPS is designed to allow completion of scram once actuation begins. A manual reset procedure for the automatic

trip logic will be established. However, manual reset is automatically prevented for approximately 10 seconds after the system has been tripped.

- The reactor emergency shutdown function will not be lost after a single failure in any trip system or upon application of a single bypass.
- Trip logic functions are apportioned between software and hardware to satisfy the above requirements. Software is designed so that it cannot be inadvertently modified.

7.2.1.4.5.2 Manual Scram Trip Logic

The two manual trip systems implement manual scram trip logic as follows:

- Each manual scram trip system has an associated manual scram switch. Operating both switches simultaneously will initiate reactor scram; operating one switch will cause a half-scram condition.
- Placing the reactor mode switch in SHUTDOWN position will result in tripping both manual trip systems at the same time.

7.2.1.4.6 Requirements for Supplemental Back-Up Scram

The RPS design, in coordination with the CRD System design, provides an alternative method to operate the scram valves of the CRD System. Upon the occurrence of output trips from two (or more) of the four RPS automatic trip systems, or from both RPS manual trip systems (i.e., a full reactor scram), RPS provides energization signals to two CRD System backup scram (scram air header dump) valves. Operation of either one or both of the backup scram valves will block the air header supply of the CRD System scram valves, and the air supplied to the scram valves will be exhausted. This exhausting of air from the scram air header will cause all scram valves of the CRD System to open and the reactor will be shut down.

7.2.2 Neutron Monitoring System (NMS)

7.2.2.1 NMS System Description

The safety-related functions of the Neutron Monitoring System (NMS) consist of the Startup Range Neutron Monitor (SRNM) Subsystem, the Local Power Range Monitor (LPRM), and the Average Power Range Monitor (APRM). The LPRM and the APRM together are also called the Power Range Neutron Monitor (PRNM) Subsystem.

System Identification

The purpose of the NMS is to monitor power generation and, for the safety-related part of the NMS, to provide trip signals to the RPS to initiate reactor scram under excessive neutron flux (and thermal power) levels (high level) or fast increases in neutron flux (short period). It also provides power information to the plant Process Computer System and the automated thermal limit monitor (ATLM) in the RC&IS for control rod block monitoring. A block diagram showing a typical NMS division is shown in Figure 7.2-3. The operating ranges of the various detectors are shown in Figure 7.2-4.

Neutron Flux Monitoring Ranges System Safety Classification

The SRNM, LPRM, and APRM perform safety-related functions, and have been designed to meet the applicable design criteria.

The AFIP Subsystem of the NMS is non-safety-related.

Power Sources

The power sources for each system are discussed in the individual subsystem descriptions.

7.2.2.1.1 Startup Range Neutron Monitor (SRNM) Subsystem

7.2.2.1.1.1 General Description

The SRNM monitors neutron flux from the source range (1×10^3 nv to 1.5×10^{12} nv). The SRNM Subsystem has eight SRNM channels, each having one fixed in-core regenerative fission chamber sensor.

7.2.2.1.1.2 Power Sources

SRNM channels are powered as listed below:

Channels:

A, E: 120 Vac Div UPS Bus A (Division I)

B, F: 120 Vac Div UPS Bus B (Division II)

C, G: 120 Vac Div UPS Bus C (Division III)

D, H: 120 Vac Div UPS Bus D (Division IV)

Loss of a power supply bus will cause the loss of the SRNM channels in one division.

7.2.2.1.1.3 Physical Arrangement

The eight detectors are all located at fixed elevation slightly above the midplane of the fuel region, and are evenly distributed throughout the core. Each detector is contained within a pressure barrier dry tube inside the core, with signal output exiting the bottom of the dry tube undervessel. Detector cables are separated according to divisional assignment and then routed to penetrate the primary containment. They are then connected to their designated preamplifiers located in the reactor building. The SRNM preamplifier signals are then transmitted to the SRNM digital measurement and control (DM&C) units in the reactor building. The DMC units provide algorithms for signal processing to provide neutron flux, power calculations, period trip margin, and period calculations, and provide various outputs for local and control console displays, recorder, and to the plant process computer system. Alarm and trip outputs are also provided for both high flux and short period trip or alarm conditions. Such outputs also include the instrument inoperative trip. The electronics for the startup range neutron monitors and their designated bypass units are located in four separate cabinets; one in each of the four division locations.

7.2.2.1.1.4 Signal Processing

Over the 10-decade power monitoring range, two monitoring methods are used: (1) For the lower ranges, the counting method, which covers from 1×10^3 nv to 1×10^9 nv; and (2) For the higher ranges, the Campbelling technique (mean square voltage MSV), which covers from 1×10^8 nv to 1×10^{13} nv of neutron flux. In the counting range, the discrete pulses produced by the sensors are applied to a discriminator after preamplification. The discriminator, together with other digital noise-limiter features, separates the neutron pulses from gamma radiation and other noise pulses. The neutron pulses are then counted. The reactor power is proportional to the count rate. In the MSV range, where it is difficult to distinguish the pulses, a dc voltage signal proportional to the mean square value of the input signal is produced. The reactor power is proportional to this mean square voltage. In the mid-range overlapping region, where the two methods are changed over, the DMC-based SRNM calculates a neutron flux value based on a weighted interpolation of the two flux values calculated by both methods. A continuous and smooth flux reading transfer is achieved in this manner. There is also the calculation algorithm of the period-based trip circuitry that generates trip margin setpoint for the period trip protection function.

7.2.2.1.1.5 Trip Functions

The SRNM scram trip functions are discussed in Subsection 7.2.1.1.4, The SRNM channels also provide trip or status signals indicating when a SRNM channel is upscale, downscale, inoperative, or bypassed. The trip setpoints are adjustable. The SRNM trips are shown in Table 7.2-2. A short period signal (the period withdrawal permissive) will inhibit continuous control

rod withdrawal such that the reactor scram (due to short reactor period caused by excessive rod withdrawal) can be avoided.

7.2.2.1.1.6 Bypasses and Interlocks

The eight SRNM channels are divided into three bypass groups. With such bypass grouping, up to three SRNM channels can be bypassed at any time, with any one channel from each bypass group bypassed. There is no additional SRNM bypass capability at the divisional level. If a SRNM divisional out of service is required (e.g., loss of divisional power), this will generate a divisional trip signal to the RPS (i.e., half scram). For SRNM calibration or repair, the bypass can be done for each individual channel separately through these bypass groups without putting the whole division out of service. The SRNM bypass switches are mounted on the control room panel. Bypass functions for the SRNM and the APRM in the NMS are separate (i.e., there is no single NMS divisional bypass which will affect both the SRNM and the APRM). Any APRM bypass will not force a SRNM bypass. The SRNM bypass and the APRM bypass are separate logics to the RPS, each interfacing with the RPS independently. Also, all NMS bypass logic control functions are located within the NMS, not in the RPS.

The SRNM has several major interlock logics. The SRNM trip functions are in effect only when the RPS mode switch is not in the RUN position. The SRNM upscale trip setpoint is set down to a lower value when the RPS is in NON-COINCIDENCE mode. Refer to Subsection 7.2.1.4.2 and Table 7.2-2. The SRNM ATWS Permissive signals are also sent to the Safety System Logic Control (SSLC) System as a permissive signal to control the initiation of boron injection and other functions as needed.

7.2.2.1.1.7 Redundancy and Diversity

The signal outputs from the eight SRNM channels are arranged such that each of the four divisions receives input signals from a different set of designated SRNM channels. Failure of a single SRNM channel will cause an inoperative trip to only one of the four divisions, causing a half scram but not full scram. Failure of a single SRNM channel, through bypassing, will not cause a trip output to the division this SRNM channel belongs. Such failure will not prevent proper operation of the remaining SRNM channels in performing their safety-related functions.

7.2.2.1.1.8 Environmental Considerations

The wiring, cables, and connectors located within the drywell are designed for continuous duty in the drywell environmental conditions.

The SRNM instruments are located in the reactor building, and are designed to operate under all expected environmental conditions in those areas.

7.2.2.1.2 Local Power Range Monitor (LPRM)

7.2.2.1.2.1 General Description

The LPRM monitors local neutron flux in the power range. The LPRM provides input signals to the APRM (Subsection 7.2.2.1.3), to the RC&IS, and to the plant Process Computer System.

7.2.2.1.2.2 Uninterruptible Power Supply (UPS)

Alternating current power for the LPRM circuitry is supplied by four 120 Vac UPS buses (A, B, C, and D) that correspond to the four safety-related divisions. Each bus supplies power to approximately one-fourth of the detectors. Each LPRM detector is provided with a dc power supply, housed in the designated divisional APRM instruments, which furnishes the detector polarizing potential.

7.2.2.1.2.3 Physical Arrangement

The LPRM consists of a total of 21 detector assemblies, each assembly consisting of four LPRM fission chamber detectors evenly spaced at four axial positions along the fuel bundle vertical direction. The assemblies are distributed throughout the whole core in evenly spaced locations. Within the core, for each square fuel region of four-by-four fuel bundles, there are two LPRM assemblies located at two of the four diagonal corners not containing a control rod blade. The LPRM detector axial positions along the fuel bundle vertical direction are illustrated in Figure 7.2-2. The LPRM detector at the lowest position in a detector assembly is designated Position A. Detectors above A are designated B and C, and the uppermost detector is designated D.

The LPRM detector is a fission chamber with a polarizing potential of approximately 100 Vdc. The four detectors comprising a detector assembly are contained in a common tube that also houses the automated fixed in-core probe sensors. The enclosing housing tube contains holes to allow coolant flow for detector cooling. The whole assembly is installed or removed from the top of the reactor vessel, with the reactor vessel head removed. The upper end of the assembly is held under the top fuel guide plate with a spring plunger. A permanently installed in-core guide tube/housing is located below the lower core plate to confine the assembly, and to provide a sealing surface under the reactor vessel.

7.2.2.1.2.4 Signal Processing

The LPRM detector outputs are connected by coaxial cables from under the vessel pedestal region and routed through the containment penetration to the APRM signal conditioning units in the reactor building, where the signals are processed and amplified. The amplified signal is proportional to the local neutron flux level. The LPRM signals are then used by the APRM to produce APRM signal (Subsection 7.2.2.1.3). Individual LPRM signals are also transmitted through dedicated interface units in the APRM with proper electrical isolation to other systems such as the RC&IS and the Process Computer System, to provide local power information.

7.2.2.1.2.5 Trip Functions

The LPRM channels provide trip and status signals indicating when an LPRM is upscale, downscale, or bypassed.

7.2.2.1.2.6 Bypasses and Interlocks

Each LPRM channel may be individually bypassed. When the maximum allowed number of bypassed LPRMs for the whole core has been exceeded, an inoperative trip is generated by the APRM.

7.2.2.1.2.7 Redundancy

The LPRM detector assemblies are divided into groups. The redundancy criteria are met such that, in the event of a single failure under permissible APRM bypass conditions, safety-related protection function can still be performed as required. The minimum number of LPRM channels that must be in service is about 50% of the LPRMs out of the total.

7.2.2.1.2.8 Environmental Considerations

The detector and detector assembly are designed to operate up to a gauge pressure of 8.62 MPa at an ambient temperature of 315°C. The wiring, cables, and connector located within the drywell are designed for continuous duty. The LPRMs are capable of functioning during and after design basis events, including earthquakes and anticipated operational occurrences.

7.2.2.1.3 Average Power Range Monitor (APRM)

7.2.2.1.3.1 General Description

The APRMs perform a safety-related function. There are four divisions of DM&C-based APRM channels located in the reactor building. Each channel receives the LPRM signals through LPRM coaxial cables as primary inputs, and averages the inputs to provide an average value that corresponds to a partial APRM signal. The partial APRM signal from each division is then transmitted to each of the other three divisions, ensuring proper electrical isolation. Each of the four APRM channels then forms a complete APRM signal by averaging the four partial APRM signals. One APRM channel is associated with each division of the RPS. The trip signal is sent directly to this RPS division without the need for electrical isolation. However, this trip signal is also sent to the other three RPS divisions through electrical isolation.

7.2.2.1.3.2 Power Sources

APRM channels are powered as listed below:

Channels:

A: 120 Vac Div UPS Bus A (Division I)

B: 120 Vac Div UPS Bus B (Division II)

C: 120 Vac Div UPS Bus C (Division III)

D: 120 Vac Div UPS Bus D (Division IV)

The bypass units and LPRM detectors associated with each APRM channel receive power from the same power supply as the APRM channel.

7.2.2.1.3.3 Signal Conditioning

The APRM channel electronic equipment averages the output signals from a selected set of 21 LPRM detectors to form a partial APRM signal for this channel. The averaging circuit automatically corrects for the number of unbypassed LPRM amplifiers providing input signals. The partial APRM signal from each division is then transmitted to each of the other three APRM channels through fiber optic transmission pathways. These fiber optic pathways provide the necessary isolation between divisions. Within each division, a complete APRM signal is then composed by averaging all four of the partial APRM signals. The APRM has signal output interface units in order to send signals to other systems.

7.2.2.1.3.4 Trip Function

The APRM scram trip function is discussed in Subsection 7.2.1.1. The APRM channels also provide trip and status signals indicating when an APRM channel is upscale, downscale, bypassed, or inoperative.

The trip setpoints are adjustable. APRM system trips are summarized in Table 7.2-3.

7.2.2.1.3.5 Bypasses and Interlocks

One APRM channel out of four channels may be bypassed at any one time for repair during plant operation while still maintaining all required APRM functions. When one APRM channel is bypassed, the trip logic to the RPS will become two-out-of-three instead of two-out-of-four. The APRM bypass switches are located on the control room panel.

7.2.2.1.3.6 Redundancy

Four independent channels of the APRM monitor neutron flux, each channel being associated with one RPS division but with its trip signal being sent to all other three RPS divisions through electrical isolation. Any two of the four APRM channels which initiate a trip output will initiate a reactor trip in the RPS (i.e., two-out-of-four-logic). The redundancy criteria are met such that in the event of a single failure under permissible APRM bypass conditions, safety-related protection function can still be performed as required.

7.2.2.1.3.7 Environmental Considerations

The APRM is capable of functioning during and after the design basis events in which continued APRM operation is required.

7.2.2.2 NMS System Design Basis

The Neutron Monitoring System (NMS) monitors thermal neutron flux from the startup source range to beyond rated power. The NMS is comprised of the following subsystems:

- Startup Range Neutron Monitor (SRNM)
- Power Range Neutron Monitor (PRNM)
- Automatic Fixed In-Core Probe (AFIP)

The PRNM subsystem includes the local power range monitor (LPRM) and average power range monitor (APRM) functions.

The SRNM and PRNM Subsystems are safety-related and are discussed below.

7.2.2.2.1 Startup Range Neutron Monitor (SRNM) Subsystem

7.2.2.2.1.1 Safety-Related Design Bases

The general functional requirements follow below:

- The SRNM shall be designed as a safety-related system. The SRNM shall generate a high neutron flux trip signal or a short period trip signal that can be used to initiate scram in

time to prevent fuel damage resulting from anticipated or abnormal operational transients.

- The SRNM and its preamplifier shall be qualified to operate under design basis accident and abnormal environmental conditions.
- The independence and redundancy incorporated in the SRNM functional design shall be consistent with the safety-related design basis of the RPS. This is discussed in Subsection 7.2.1.2.

7.2.2.2.1.2 Non-Safety-Related Design Bases

Neutron sources and neutron detectors together shall result in a signal-to-noise ratio of at least 2:1 and a signal count rate of at least 3 cps with all control rods fully inserted in a cold unexposed core.

The SRNM shall be able to perform the following functions:

- Indicate a measurable increase in output signal from at least one detecting channel before the reactor period is less than 20 seconds during the worst possible startup rod withdrawal conditions.
- Indicate measurable increases in output signals with the maximum permitted number of SRNM channels out of service during normal reactor startup operations.
- Provide a continuous monitoring of the neutron flux over a range of 10 decades (approximately 1×10^3 nv to 1.5×10^{13} nv).
- Provide a continuous measure of the time rate of change of neutron flux (reactor period) over the range from -100 seconds to (-) infinity and (+) infinity to +10 seconds.
- Generate interlock signals to block control rod withdrawal if the neutron flux is greater than or less than preset values or if certain electronic failures occur.
- Generate rod block whenever the period exceeds the preset value.
- Except for annunciators, the loss of a single power bus shall not disable the monitoring and alarming functions of all the available monitors.

7.2.2.2.2 Local Power Range Monitor (LPRM)

7.2.2.2.2.1 Safety-Related Design Bases

The general functional requirements follow below:

- General functional requirements of the LPRM function are a sufficient overall number of LPRM signals to satisfy the APRM safety-related design bases.
- The LPRM shall be designed as a safety-related system to satisfy the APRM safety design bases.

- The LPRM shall be qualified to operate under design basis accidents and abnormal environmental conditions.

7.2.2.2.2.2 Non-Safety-Related Design Bases

The LPRM supplies the following:

- Signals to the APRM that are proportional to the local neutron flux at various locations within the reactor core.
- Signals to alarm high or low local neutron flux.
- Signals proportional to the local neutron flux to drive indicators and displays, and for use by the Process Computer System, to be used for operator evaluation of power distribution, local heat flux, etc.
- Signals proportional to the local neutron flux for use by other interface systems such as the RC&IS for the rod block monitoring function.

7.2.2.2.3 Average Power Range Monitor (APRM)

7.2.2.2.3.1 Safety-Related Design Bases

The general functional requirements follow below:

The APRM shall be designed to safety-related standards. The general functional requirements are that, under the worst permitted input LPRM bypass conditions, the APRM shall be capable of generating a trip signal in response to excessive average neutron flux increases in time to prevent fuel damage. The independence and redundancy incorporated into the design of the APRM shall be consistent with the safety-related design bases of the RPS. The RPS design bases are discussed in Subsection 7.2.1.2.

7.2.2.2.3.2 Non-Safety-Related Design Bases

The APRM shall provide the following functions:

- A continuous indication of average reactor power (neutron flux) from 1 to 125% of rated reactor power which shall overlap with the SRNM range. Such signals shall be made available to other interface systems as core power information.
- Interlock signals for blocking further rod withdrawal to avoid an unnecessary scram actuation.
- A simulated thermal power signal derived from each APRM channel which approximates the heat dynamic effects of the fuel.
- A continuous LPRM/APRM display for detection of any neutron flux oscillation in the reactor core.

7.2.2.3 Testing and Inspection Requirements

7.2.2.3.1 General Requirements

All NMS instruments (not including sensors) in the reactor building are designed such that they can be tested, inspected, and calibrated as required during plant operation without causing plant shutdown or scram, and with easy access to the service personnel.

NMS instrument modules, including SRNM and APRM, are designed with the capability of being tested for the normal performance, trip performance, and calibration function, either through automated process or through manual process. Routine surveillance functions, including periodic tests and calibration, are automated to the extent possible with minimum operator interference.

Detailed NMS instrument test function requirements, including periodic tests and calibration durations for each instrument, are included in the NMS hardware and software system specification document.

For microprocessor-based instruments, an instrument unit self-test function is provided.

7.2.2.3.2 Specific Requirements

7.2.2.3.2.1 SRNM Testability and Calibration

Each SRNM channel is tested and calibrated based on the procedures listed in the SRNM instruction manual. Each SRNM channel is checked to ensure that the SRNM high flux scram function and short period scram function is operable.

7.2.2.3.2.2 LPRM Testability and Calibration

LPRM channels are calibrated using data from the AFIP Subsystem and based on Process Computer System three-dimensional core power calculations. The calibration is based on procedures in the applicable instruction manual.

7.2.2.3.2.3 APRM Testability and Calibration

APRM channels are calibrated using data from the Process Computer System three-dimensional core power and heat balance calculations. The calibration is based on procedures in the applicable instruction manual. Each APRM channel is able to be tested individually for the operability of the APRM high neutron flux scram and rod-blocking functions by introducing test signals.

7.2.2.4 Instrumentation

7.2.2.4.1 Instrumentation Requirements

All the NMS instruments are primarily based on the digital measurement and control (DMC) modules. All NMS DMC instruments follow a modular design concept such that each modular unit or its subunit is easily replaceable. The instrument has a flexible interface design to accommodate either metal wire or fiber optic communication links.

All NMS instruments are provided with necessary operator-interface functions based on adequate NMS man-machine interface requirements.

7.2.2.4.2 Basic Control Logic Requirements

The control logic of the safety-related subsystems in the NMS are designed in a “fail-safe” manner. That is, a trip signal is initiated if the control logic device fails because of component failure or power failure.

7.2.2.4.3 Basic Instrument Arrangement Requirements

All NMS instruments in the reactor building are located in clean areas. All NMS instruments and equipments are located in appropriate areas of racks with appropriate divisional physical and electrical separation.

7.2.3 Suppression Pool Temperature Monitoring System (SPTMS)

7.2.3.1 System Description

7.2.3.1.1 General

The SPTMS provides the suppression pool temperature data for automatic scram and automatic S/P cooling initiation, when established limits of high temperature are exceeded.

The SPTMS also provides S/P temperature data for operator information and recording and temperature information on post-accident conditions of the suppression pool. The SPTMS outputs to other systems are shown in Table 7.2-4.

7.2.3.1.2 Power Sources

The SPTMS itself does not include dedicated power supply equipment.

7.2.3.1.3 Equipment Design

The system is composed of four independent instrumentation divisions. Each safety-related division contains a number of thermocouples spatially distributed around the suppression pool. The sensor locations are defined based upon the following considerations:

- to provide four-divisional, redundant measurement of S/P local and bulk-mean temperature, under normal plant operating conditions and under postulated accident and post-accident conditions;
- to implement the divisional 150 mm separation of sensors in the azimuthal directions; and
- to locate sensors away from jet paths of SRV quencher, horizontal vent discharges, and PCCS vent line discharges.

For measurement of the suppression pool average bulk temperature, the particular sensor groups are placed in four distinctive elevation rows; a nominal distance between the top elevation sensor row and low water level status is 150 mm; a nominal distance between the bottom elevation sensor row and the lowest horizontal vent is 640 mm .

Each SRV quencher is within 9 meters of temperature sensors. Beyond rapid local transients, this design constraint, together with the other factors mentioned above, limits the maximum measurement differences between local and bulk-mean values.

The sensor electrical wiring, encapsulated in bendable grounded sheath, is terminated in the wetwell-sealed, moisture-proof junction box for easy sensor replacement or maintenance during the plant outage time. The thermocouple sensor wiring from the wetwell junction boxes is directed through the suppression pool divisional instrument penetrations to four-divisional LMUs of the Essential Multiplexing System.

7.2.3.1.4 Signal Processing, Control and MMI

The direct function of SPTMS is limited to the generation of suppression pool local temperature sensing signals over the operating range of 4°C to 110°C. The signals are of four safety-related divisions and are hardwired to the Multiplexing System.

The SPTMS interfacing systems accept these signals for subsequent conditioning, scanning, validation and processing, to produce, in turn, safety-related protective actions, interlocks, abnormal status alarms, data display and recording.

7.2.3.1.5 Testing and Inspection Requirements

Proper functioning of analog temperature sensors will be verified by channel cross-comparison during plant normal operation mode.

Each of four SPTMS safety-related divisions is testable during plant normal operation to determine the operational availability of the system. Each safety-related division of SPTMS has the capability for testing, adjustment, and inspection during plant outage.

7.2.3.1.6 Instrumentation Requirements

The instrumentation and control requirements related to the SPTMS are addressed in Subsections 7.2.3.1 and 7.2.3.2.

7.2.3.2 Design Basis

7.2.3.2.1 Safety-Related Design Bases

The safety-related functional requirements are to prevent exceeding the established suppression pool (S/P) temperature limits by providing the Suppression Pool Temperature Monitoring System (SPTMS) input for automatic scram initiation.

The SPTMS is classified as a safety-related four-divisional system, Seismic Category I.

7.2.3.2.2 Non-Safety-Related Design Bases

The non-safety-related functional requirements are as follows:

- to provide input for automatic suppression pool cooling mode initiation; and
- to provide input for data display, alarm and recording on main control room panels.

Table 7.2-1 Channels Utilized in Functional Performance of RPS

Channel Description	Number of Sensors
Neutron Monitoring System (APRM)	4
Neutron Monitoring System (SRNM*)	8
Nuclear system reactor pressure	4
Drywell pressure	4
Reactor vessel narrow range water level	4
Low charging pressure to control rod hydraulic control unit accumulator	4
Main steam line isolation valve position switches	8
Suppression pool temperature monitoring	64

* In all modes except RUN

Table 7.2-2 SRNM Trip Function Summary

Trip Function	Trip Setpoint (Note 6)	Action
SRNM Upscale Flux Trip	45% power (Note 1)	Scram (bypassed in RUN)
SRNM Upscale Flux Alarm	35% power (Note 2)	Rod Block (bypassed in RUN)
SRNM Short Period Trip	10 second	Scram (Note 3) (bypassed in RUN & REFUEL) (no scram function in counting range)
SRNM Short Period Alarm	20 second	Rod Block (bypassed in RUN)
SRNM Period Withdrawal Permissive	55 second	Rod Block (bypassed in RUN) (Note 4)
SRNM Inoperable	Module interlock disconnect; HV voltage low	Scram (bypassed in RUN)
SRNM Downscale	3 cps	Rod Block
SRNM Intermediate Upscale Flux Trip	$5x10^5$ cps	Scram (activated in manual switch in RPS) (Note 5)
SRNM Intermediate Upscale Alarm	$1x10^5$ cps	Rod Block (activated in manual switch in RPS) (Note 5)
SRNM ATWS Permissive	6% power	Permissive signal in SSLC (all modes)

Notes:

(1) This scram setpoint is equivalent to the upscale scram on the last range of BWR/5 IRM, at the 120/125 level.
(2) This rod block setpoint is equivalent to the upscale rod block on the last range of BWR/5 IRM, at the 108/125 level.
(3) Scram action only active in mean square voltage range, which is defined as above 1×10^{-4}% power.
(4) With the rod block at this setpoint, the reactor period will never reach 10 seconds because of rod withdrawal. Consequently, no reactor scram will result.
(5) RPS NON-COINCIDENCE mode switch. Conditions for activation are defined in the plant operating procedures.
(6) Trip setpoints are analytical limits. Instrument accuracy is considered in the setpoint methodology.

Table 7.2-3 APRM Trip Function Summary

Trip Function	Trip Setpoint	Action
APRM Upscale Flux Trip	120% Power	Scram (only in RUN)
	15% Power	Scram (not in RUN)
APRM Upscale Flux Alarm	108% Power	Rod Block (only in RUN)
	12% Power	Rod Block (not in RUN)
APRM Upscale Simulated Thermal Power Trip	115% Power	Scram
APRM Inoperable	1. LPRM input too few;	Scram and Rod Block
	2. Module interlocks disconnect	Scram and Rod Block
APRM Downscale	5% Power	Rod Block (only in RUN)
APRM Rapid Increase Trip	10%/second	Scram (all modes)
APRM Rapid Increase Alarm	2%/second	Rod Block (all modes)

Note: Trip setpoints are analytical limits. Instrument accuracy is considered based on the instrument setpoint methodology

Table 7.2-4 Outputs from SPTMs to Other Systems

Signal	Utilization
1. Sixteen Division 1, (2), (3), (4), Suppression pool local temperature signals to Essential Multiplexing System Division 1, (2), (3), (4) LMU	1. Input for divisional scram initiation and temperature status display with SSLC and RPS. Input for non-divisional S/P cooling mode initiation (FAPCS) Input for non-divisional S/P temperature data display, alarm and recording (within PMCS & MCR).

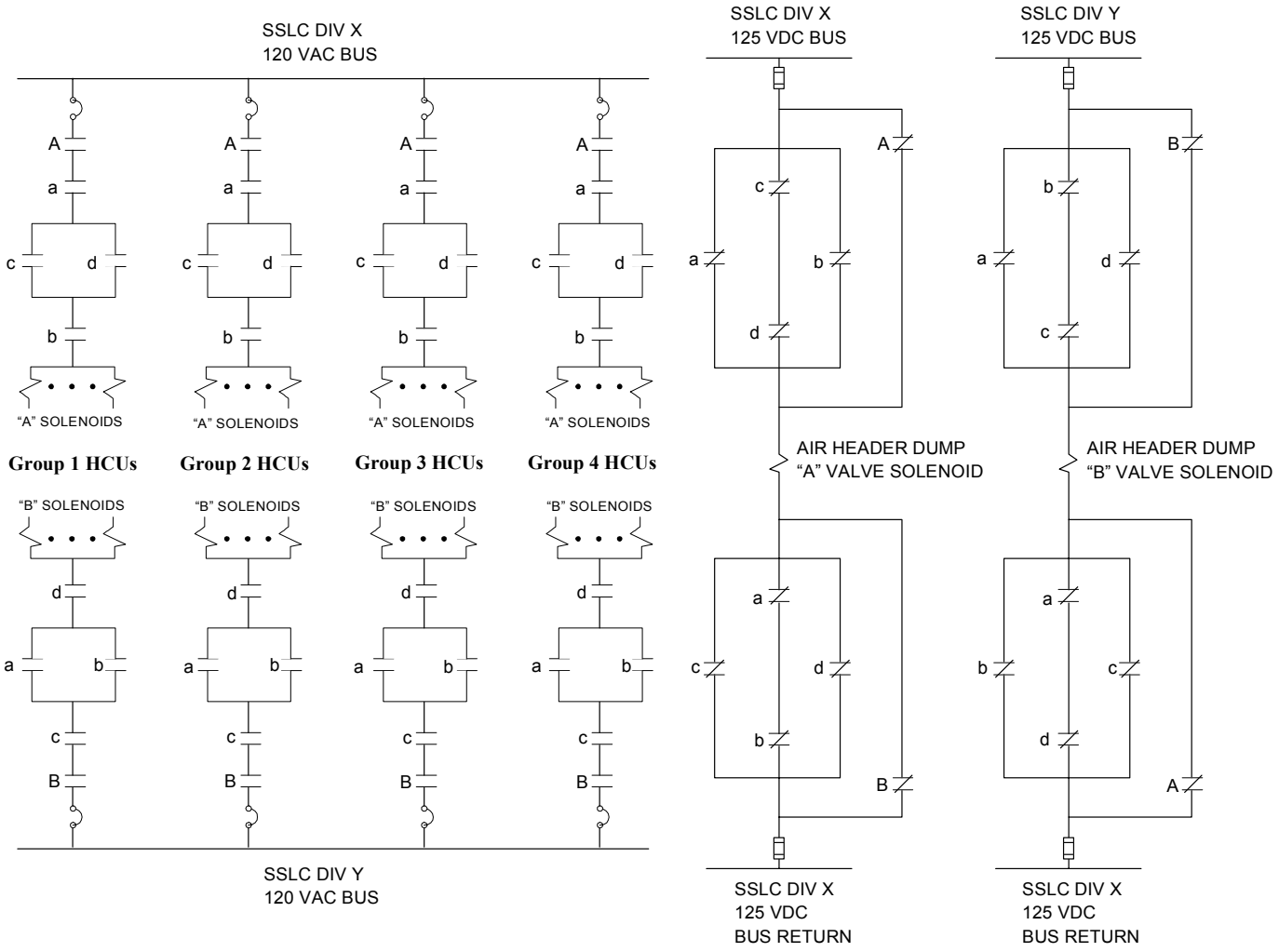

Figure 7.2-1 Power Distribution for RPS Actuators

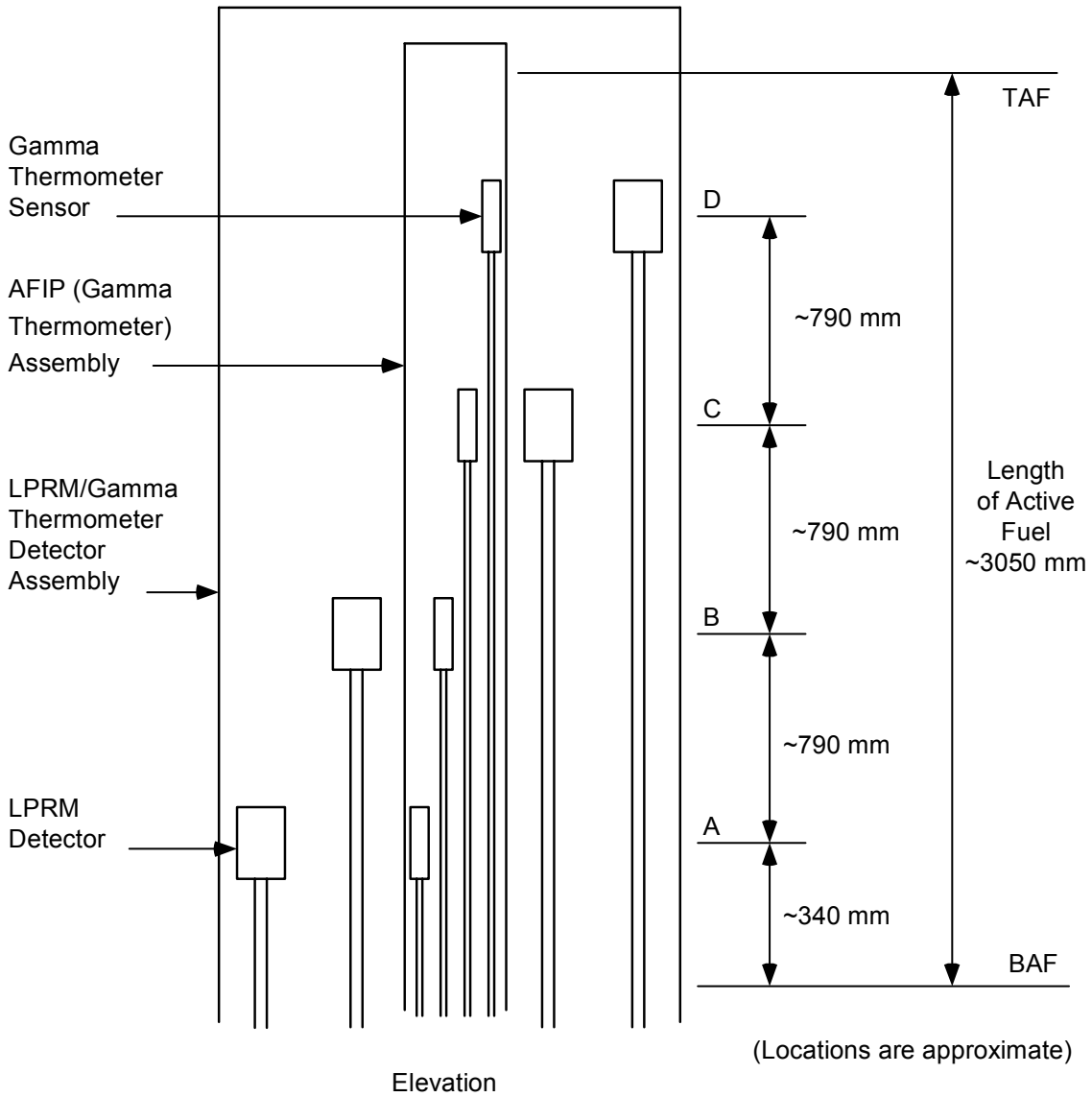

Figure 7.2-2 Neutron Monitoring LPRM Locations

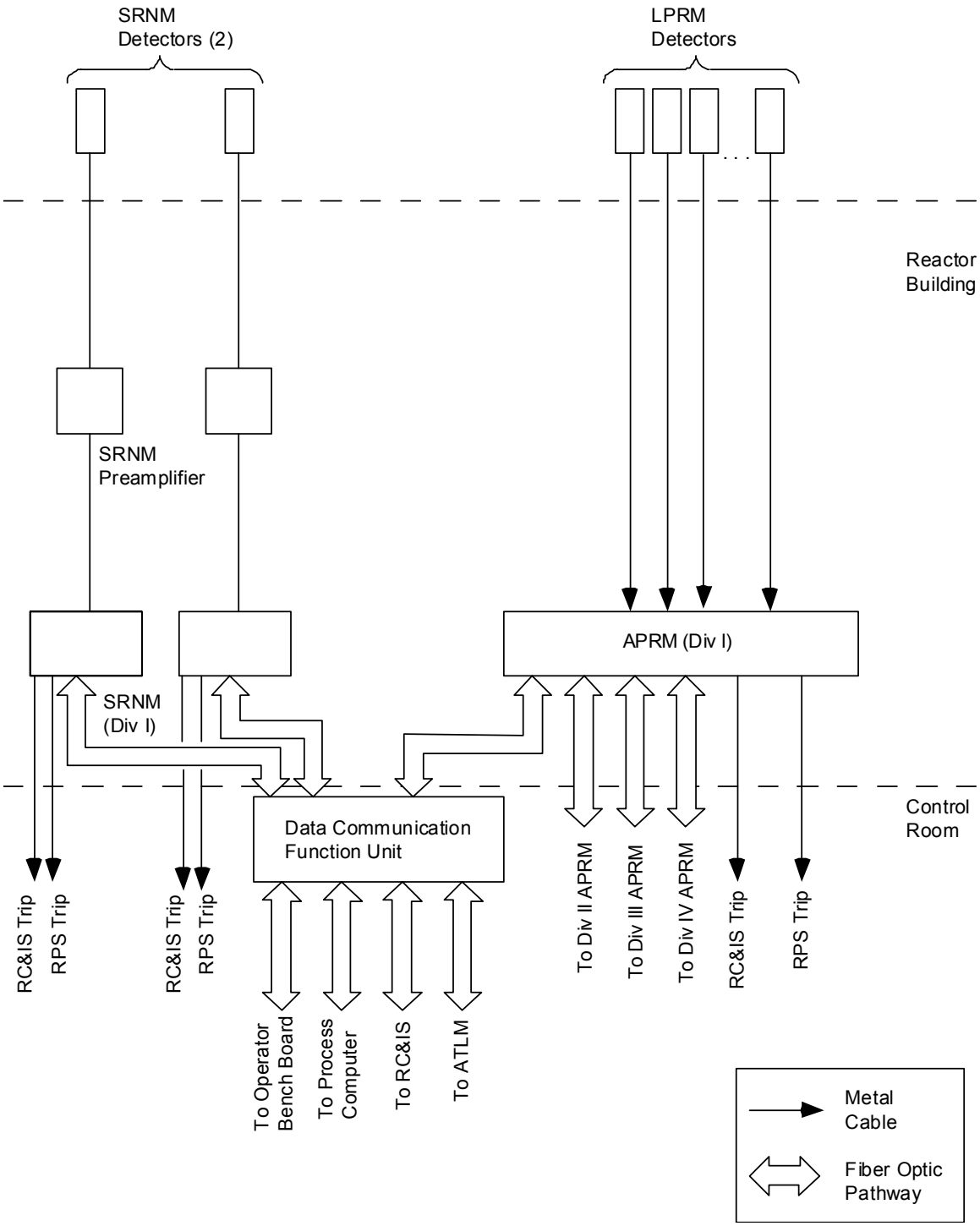

Figure 7.2-3 Basic Configuration of a Typical NMS Division

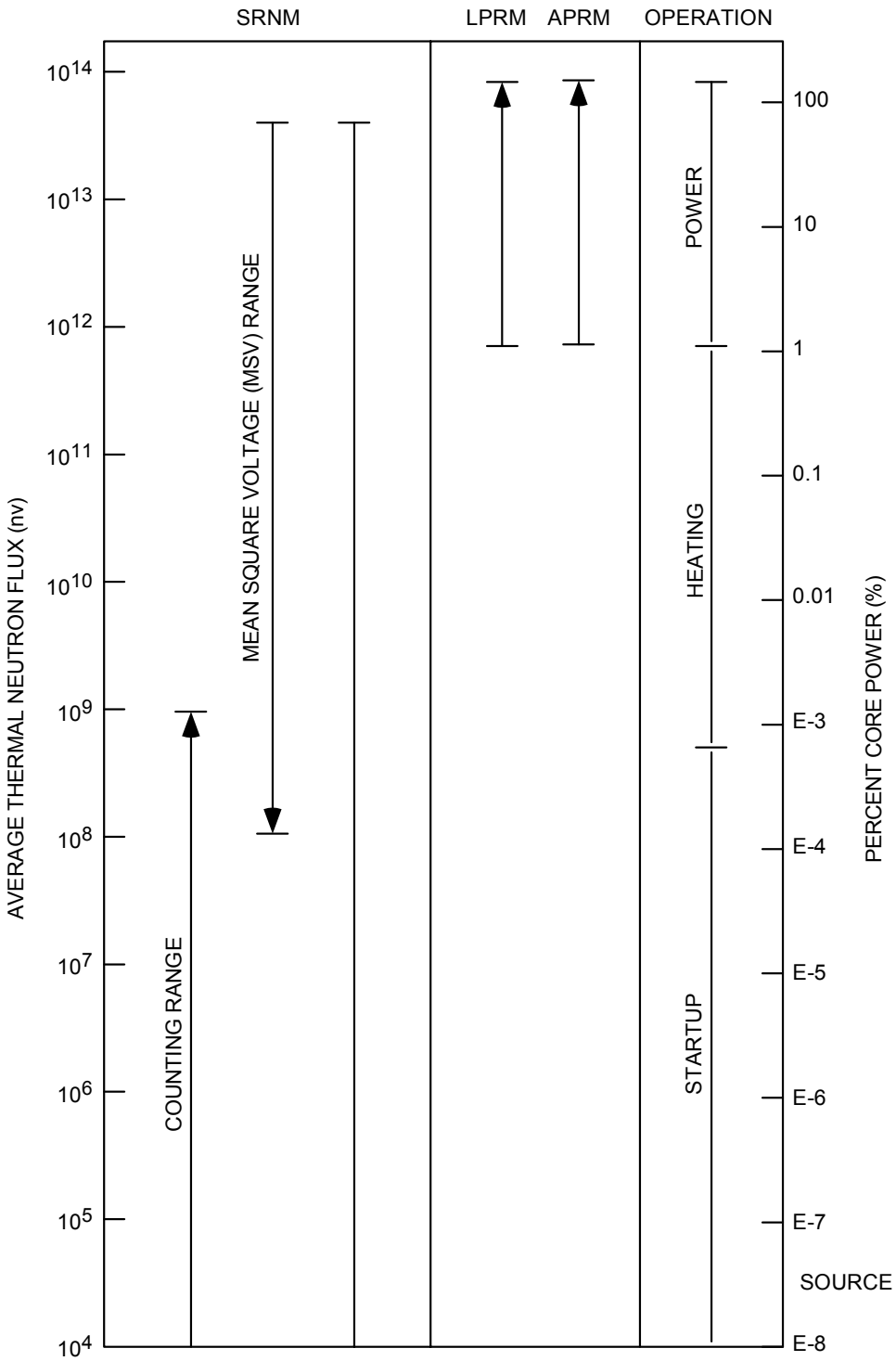

Figure 7.2-4 Neutron Flux Monitoring Ranges

8. Support and Auxiliary Systems

8.1 Offgas System

[[

{3}]]

8.2 Fire Protection System

8.2.1 System Description

The term "fire protection system" refers to the integrated complex of components and equipment provided for detection and suppression of fires. In addition to this system, the "fire protection program" includes the concepts of design and layout implemented to prevent or mitigate fires, administrative controls and procedures, and the training of personnel to combat fires.

The Fire Protection System (FPS) P&ID for the reactor building, fire pump house, and yard piping is shown in the schematic located in Appendix A.

The FPS is the integrated complex of equipment and components that provides early fire detection and fire suppression and that limits the spread of fires. This system is part of the overall protection program that includes the design and plant layout which will prevent or mitigate fires and also includes the administrative controls and procedures.

Fixed fire suppression systems are installed in various locations throughout the plant. Standpipe and hose systems, together with portable fire extinguishers, are provided in all building areas. The type of fire suppression is determined based on the combustible loading and the extent of safety-related equipment within a fire area.

A comprehensive fire detection, alarm, supervisory control, and indication system is also provided in various locations throughout the plant. The operation of this system is automatic, and is controlled by local panels throughout the plant.

A main fire status indication and annunciation panel is provided in the Control Room to monitor and receive system actuation and trouble alarm signals from the local panels.

The FPS has the capability to provide water to the Fuel and Auxiliary Pool Cooling System in post-accident scenarios.

8.2.1.1 Facility Features for Fire Protection

Consistent with applicable safety-related requirements, all structures, systems, and components are designed and located to minimize the probability and effect of fires. Noncombustible and fire-resistant materials are used to the maximum extent to minimize the combustible loading and thereby reduce the expected duration, severity, and intensity of combustion.

Within the safety-related structures, interior walls, partitions, structural components, materials for insulation, and radiation shielding are either noncombustible or have low ratings for fuel contribution. The flame spread and smoke development rating of these materials is 25 or less. (Materials having a flame spread and smoke development rating of 50 or more are considered to be combustible when analyzing fire hazards.)

Exposed structural steel required to protect safety-related areas are fireproofed with material having a fire rating of up to 3 hours if it is determined necessary by the fire hazard analysis.

Access stairwells are enclosed in minimum 2-hour rated fire walls and equipped with self-closing fire-rated doors. Door openings in fire barriers are equipped with fire doors, frames, and hardware rated the same as the barriers they penetrate.

Safety-related raceway and circuit routing complies with regulatory requirements except that separation by fire barriers rather than distance is used outside the control room or primary containment. Exceptions to this requirement are analyzed and justified as being acceptable on an individual basis. All safety-related cables are capable of passing the IEEE-383 flame test.

8.2.1.2 Fire Protection Water Supply System

8.2.1.2.1 Water Source

Water for the Fire Protection System is supplied at all times from a minimum of two reliable sources. Each source has sufficient capacity to meet the maximum water demand of the system for a period of two hours: a minimum capacity of 1135 m^3 based on a maximum flow rate of 158 l/sec

The sources are valved together in an arrangement that precludes a failure in one from rendering the other inoperative. The sources are sized and designed so that the withdrawal of fire water will not impair the operation of other systems used for plant shutdown (such as the Plant Service Water system which provides cooling water for reactor shutdown cooling). To allow for periodic maintenance on a source while maintaining fire protection requirements, a total of three sources is provided.

8.2.1.2.2 Fire Pumps

There are two 100% horizontal centrifugal fire pumps each rated for 158 l/sec at 862 kPa total differential head. The water flow rate is based on the total demand of the largest automatic sprinkler or deluge system plus 32 l/sec for manual hose streams. The pumps are capable of delivering the flow and pressure required over the longest supply route of the water supply system.

The lead pump is electric motor-driven and the backup pump is diesel engine-driven. This backup pump is available in the event of failure of the motor-driven pump or loss of preferred power. An electric motor-driven jockey pump is provided to maintain the system pressurized to a gauge pressure of 862 kPaand to minimize the cycling of the main fire pumps. Water for the fire pumps is taken from either natural draft, cooling tower basin. Check valves are installed at the pump discharges to prevent water from one source being pumped into the other source. Individual fire pump connections to the yard fire main are separated with sectionalizing valves between connections.

The diesel-engine-driven fire pump, including its suction and discharge lines, is designed to meet the requirements of ANSI B31.1, Power Piping (or comparable European Code), and is designed to remain functional after a safe shutdown earthquake (SSE).

The fire pumps are located in the pump house structure. Fire protection of the motor-driven fire pump and its controls is provided by hose reels and portable fire extinguishers. The diesel-engine-driven fire pump and its controls are in a separate compartment which is 3-hour-rated and with doors that comply with National Fire Protection Association Standard, NFPA 80 (or comparable European standard). The fuel oil day tank is located in a curbed area within the diesel-engine-driven fire pump compartment. The compartment is provided with an automatic foam sprinkler system.

The fuel oil day tank for the diesel engine fire pump has a capacity of 2080 liters. This volume is sufficient to allow operation of the diesel engine for approximately 24 hours of pump operation.

8.2.1.3 Yard Piping

A 30.5 cm cement-lined cast iron piping network installed below the frost line supplies fire water to all plant buildings. Locked open sectionalizing and isolating post-indicator valves are installed in the fire main loop to permit isolation of any part of the main loop without completely removing the system from service.

The portion of the yard main piping supplying fire water to the reactor building fire water loop and the standpipe and hose connections for manual fire fighting protection areas containing equipment for safe shutdown are designed to the requirements of ANSI B31.1 (or comparable European Code), and qualified for an SSE.

Fire hydrants located at approximately 76.2 m intervals along the main fire loop provide fire fighting capability especially in the vicinity of areas or buildings containing combustible materials. The fire hydrants are placed no closer than 12.2 m (40 ft) from the buildings protected. Each hydrant is provided with a key-operated gate valve with a curb-box.

Enclosures housing hose carts are located in the yard area near the hydrants. Hose carts can be moved to any hydrant. The fire hydrants are protected against damage from freezing or vehicles.

8.2.1.4 Water Sprinkler, Standpipe, and Hose Systems

The sprinkler systems and the hose station standpipes have separate connections to the fire water main, so no single failure will impair both systems.

Standpipes are located within stairwells. The hose stations are adjacent to stairways and other locations which are accessible. Each hose station has 30.5 m of 3.81 cm jacket-lined fire hose.

The water supply pressure is sufficient to maintain a gauge pressure of 448 kPa) at the topmost outlet of each standpipe with 31.5 l/sec flowing from the topmost outlet of the most

hydraulically remote standpipe. Individual standpipe size is not less than 10.2 cm for multiple hose connections. If the gauge pressure at the hose station exceeds 689 kPa , orifice discs are installed at the hose coupling to reduce the reaction force at the hose end.

At least one hose stream is made available to reach any location in areas containing safety-related equipment.

For areas containing equipment for safe shutdown, standpipes and hose connection for manual firefighting are designed to remain functional following an SSE. The piping system serving such hose stations is analyzed for SSE loading. The piping and valves are designed to satisfy ANSI B31.1 requirements (or comparable European Code).

Portable multipurpose Class ABC fire extinguishers are provided throughout the buildings. The fire extinguishers are located in accordance with NFPA 10.

8.2.1.4.1 Water Spray or Deluge for Charcoal Filters

Charcoal filters in the ventilation systems of the plant are provided with water spray or deluge systems for fire protection. The water is supplied to the filters by means of a fixed piping system terminating on the exterior of the charcoal adsorber assembly with manual shutoff valves. In the event of charcoal ignition, the piping can be connected to the fire water supply system through a standard hose or jumper fitting.

8.2.1.4.2 Standpipe and Hose Systems (Wet)

The wet standpipes are designed for Class III service in accordance with NFPA 14. A 6.35-cm to 3.8-cm reducer is utilized on the 6.35-cm hose valve.

All areas of the power block are within reach of at least one effective hose stream. Standpipes designated for firefighting in areas containing equipment for safe shutdown of the plant will be analyzed to remain functional after an SSE

Adjustable fog and straight stream nozzles are provided for all hose reels.

8.2.1.5 Fixed Automatic Water Extinguishing Systems

The selection of specific types of water suppression systems and areas requiring protection are determined based on equipment arrangements and combustible loading in each fire area.

Sprinkler piping for safety-related areas is designed to meet the requirements of NFPA 13, and Seismic Category II criteria (assurance that any failure of FPS piping caused by an earthquake will not damage safety-related items).

8.2.1.5.1 Wet Pipe Sprinkler System

Automatic sprinklers are provided to protect areas identified as requiring such protection by the fire hazard analysis, except where conditions dictate the use of other types of systems or fire suppressing agents.

Each system consists of an outside screw and yoke valve with a position switch, an alarm check valve assembly, piping, and automatic closed-head (thermal element operated) sprinkler. Water discharges immediately from sprinklers opened by heat from a fire. The wet pipe sprinkler system is designed to meet the requirements of NFPA 13.

8.2.1.5.2 Pre-Action Sprinkler System (Manual or Automatic)

The pre-action sprinkler system employs automatic closed-head sprinklers attached to a piping system containing compressed air, with fire detectors installed in the same area as the sprinklers. A pre-action system is used in areas where there is danger of serious water damage as a result of a leaking automatic sprinkler head, spurious actuation, or a pipe break. The pre-action sprinkler system is designed to meet the requirements of NFPA 13.

8.2.1.5.3 Deluge System (Manual and/or Automatic)

This system is actuated automatically or manually depending upon the area and the nature of equipment being protected. The water spray system employs open head sprinklers or nozzles attached to a piping system connected to water supply with fire detectors installed in the same area as the nozzles. Deluge systems are normally used for hazards requiring an immediate application of water over an entire hazard area. The deluge system is designed to meet the requirements of NFPA 15.

8.2.1.6 Foam System

A foam system is provided for the plant standby diesel generator and day tank rooms, diesel fire pump day tank room, the outdoor diesel fuel oil storage tanks, and the turbine lube oil system and storage tanks.

Spot type rate compensation detectors initiate local alarms and annunciate on the fire protection panel in the control room. Two detection circuits arranged in a cross-zoned configuration are employed. Failure of one circuit or a detector will not affect the alternate circuit.

The foam system is designed to meet the requirements of NFPA 11.

8.2.1.7 Smoke Detection and Alarms Systems

Smoke detectors are installed in every safety-related area except in containment and in areas containing significant amounts of combustible materials to provide early detection and warning of fires. Detectors are selected based on the nature and burning characteristics of the materials within the fire area, and on the basis of the Fire Hazard Analysis.

A minimum of two detectors is installed in any single safety-related area.

Smoke detection systems for early warning and annunciation are separate from heat detection systems for suppression system actuation.

Local control panels are provided to continuously monitor the zone and area detection systems and circuits. Upon receipt of an indication of fire from any of the area smoke detectors, the control panel activates a visual and audible fire alarm at the panel.

All heat and smoke detection systems are electrically supervised to detect circuit breaks, ground faults, and power failure. All fire or trouble alarms register on an audible-visual annunciator on a fire protection panel in the main control room.

The fire suppression and detection system alarm panels have 24-hour battery packs located at each area panel and at the main control room panel.

Manual fire alarm stations (pull stations) are provided at the normal exit paths throughout the buildings.

8.2.1.8 Fire Barriers

Fire barriers of 3-hour fire resistance rating are provided, separating:

- safety-related systems from any potential fires in non-safety-related areas that could affect the ability of safety-related systems to perform their safety function;
- redundant divisions or trains of safety-related systems from each other so that both are not subject to damage from a single fire; and
- components within a single safety-related electrical division that present a fire hazard to components in another safety-related division.

Penetration through fire barriers are sealed or closed to provide fire resistance rating at least equal to that of the barrier. Only noncombustible materials qualified by test per ASTM E-119 are used for construction of fire barriers. Ventilation duct openings in fire barriers are protected by fire dampers with the same rating as the barrier.

8.2.1.9 Building Ventilation

Ventilation for the different areas is designed as follows:

8.2.1.9.1 Main Control Room (MCR)

The MCR areas are separated from other major plant areas by 3-hour fire barriers.

Manual fire fighting capability in the control room consists of portable dry Class ABC chemical fire extinguishers. Additionally, fire water hose stations with UL-approved fixed fog nozzles are installed outside both entrances to the control room. No hose stations are located within the control room.

The control room is provided with smoke detectors that actuate audible and visible alarms on the fire protection panels in the control room.

Self-contained breathing apparatus with a minimum capacity of 4 hours are available for use by control room operators. In addition, fresh air hoses are available to the operators, which can be connected to the fresh air, personnel breathing air system.

The control room ventilation intake is provided with smoke detection capability to automatically detect and annunciate the presence of smoke. Upon receipt of the alarm, the control room ventilation system can be manually placed in the recirculation mode to isolate the control room from the outside air.

To clear the control room of smoke when there is no smoke in the outside air intake, the ventilation system can be placed in the purge mode, in which the recirculation path is closed and 100% of the air flow through the control room is outside air. The normal ventilation return/exhaust fans are used for purging. The purge mode is manually initiated.

Safe shutdown of the plant is not dependent on the operation of the MCR ventilation system. A remote shutdown station is provided inside the reactor building safety envelope, outside the main control room, and is serviced by a separate ventilation system. Plant shutdown and maintenance of shutdown conditions can be accomplished from this station. The MCR fire damper and smoke purge design is such that smoke from a main control room fire is excluded from reaching the remote shutdown station.

8.2.1.9.2 Reactor Building Clean Area Ventilation System (CLAVS)

Fire, in any of the areas served by CLAVS, is isolated by the closure of the fire dampers in the supply and return air ducts serving the fire area. Area fire and/or smoke detectors annunciate the fire condition in the main control room and heat detectors initiate any automatic suppression system provided. Otherwise, manual fire extinguishing is initiated. After the fire is extinguished, smoke is removed by opening dampers necessary for smoke removal from the affected compartment(s) and running one of the CLAVS smoke removal fans.

8.2.1.9.3 Reactor Building Contaminated Area Ventilation System (CONAVS)

In areas served by CONAVS, a fire is isolated by the closure of the fire dampers in the supply and return air ducts serving the fire area. Area fire and/or smoke detectors annunciate the fire in the main control room. Automatic fire suppression is initiated by area fire or smoke detectors. Manual fire suppression is used otherwise. After the fire is extinguished, smoke is removed by opening dampers necessary for smoke removal from the affected compartment(s) and running a CONAVS exhaust fan or one of the containment purge exhaust fans.

8.2.1.9.4 Refueling and Pool Area Ventilation System (REPAVS)

Fire in the refueling floor is annunciated in the main control room. Fire dampers in the supply and return ducts close during a fire. Manual fire suppression is provided. After a fire is extinguished, smoke is removed by opening dampers necessary for smoke removal and running a REPAVS exhaust fan.

8.2.1.9.5 Battery Room Exhaust System (BRES)

A fire in a battery room is annunciated in the main control room. Fire dampers in the supply and return ducts close during a fire and the battery chargers are turned off. After extinguishing the fire, smoke is removed by opening dampers necessary for smoke removal. The exhaust fan serving the area, if stopped, is restarted manually to remove smoke from the battery room.

8.2.1.9.6 Auxiliary Fuel Building

A fire in the auxiliary fuel building is annunciated in the main control room. Fire dampers in the supply and exhaust ducts close to preclude the spread of a building fire to other areas. Both manual and automatic suppression systems are provided in the auxiliary fuel building. After a fire is extinguished, smoke is removed by opening dampers necessary for smoke removal and running the Auxiliary Fuel Building Ventilation System (AFBVS) exhaust fan.

8.2.1.9.7 Turbine Building

A fire in the turbine building is annunciated in the main control room. Fire dampers in the supply and exhaust ducts close to preclude the spread of a turbine building fire to other areas. Both manual and automatic suppression systems are provided in the turbine building. Following fire suppression in the turbine building, fire dampers can be opened as appropriate for smoke removal. Turbine Building Exhaust (TBE) fans can be operated to expedite smoke removal.

8.2.1.9.8 Radwaste Building

A fire in the radwaste building is annunciated in the main control room. Fire dampers in the supply and return ducts close during a fire. After extinguishing the fire, smoke is removed by opening dampers necessary for smoke removal and the smoke removal fan is started.

8.2.2 Design Bases

8.2.2.1 General

The program's overall intent is to provide a “defense-in-depth” design resulting in adequate balance in:

- preventing fires from initiating;
- rapid detection and suppression of fires that do occur, thereby limiting fire damage; and
- design of plant safety-related systems so if a fire starts (in spite of the prevention program) and burns out of control for a considerable length of time (in spite of fire detection and suppression), safe shutdown will not be affected.

8.2.2.2 Design Bases

The Fire Protection System (FPS) is designed in accordance with the following design bases:

- To maintain the ability to safely shut down the reactor and keep it shut down by providing adequate separation of safety-related equipment and the capability to control the spread of and extinguish the postulated fires in all plant areas by the use of fixed and/or portable fire fighting equipment. This capability is to be achievable during all modes of plant operation.

- To provide automatic fire detection and annunciation for selected areas of the plant for personnel safety and fire brigade notification.

- To supply the maximum fire water demand at any point throughout the system, with one fire pump out of service.

- To prevent inadvertent operation of the FPS from jeopardizing the capability to achieve safe shutdown of the plant.

- To preclude damage to plant safety-related structures, systems, or components caused by seismic loading of the FPS.

- To minimize the probability of the spread of fire by the use of fire barriers between areas of significant combustible loading

- To keep equipment required for safe shutdown free from fire damage if there is a safe shutdown earthquake (SSE). To this end, one source of fire water supply, including a water source; one fire pump and its associated suction and discharge lines; and a portion of the yard main piping and fire water lines, including standpipes and hose connections, are to be analyzed to remain functional after an SSE. This includes analysis to the first isolation valve on all branches connected to the seismically analyzed fire water lines.

- To ensure continuous fire water supply of at least 1,136 m^3 to the fire pumps in the event of failure of a fire water source. To this end two separate, reliable fire water sources are to be provided as part of the Plant Service Water Basin and are to be interconnected so there is no interruption in supply and so failure of one water source or its piping will not drain the other source.

- To provide manual suppression capability to all plant areas, including those that also have automatic fire suppression systems.

- To ensure that a single active failure or a crack in a moderate-energy line cannot impair both the primary and backup fire suppression systems.

- To permit isolation from the fire main or outside hydrants for maintenance or repair without interrupting FPS water supply.

- To ensure at least one effective hose stream can reach any location containing safe shutdown equipment, for preventing a fire exposure hazard to such equipment.

- To confine the products of combustion and gases from radioactive areas to allow control and monitoring to the extent necessary to ensure off-site dose limits will not be exceeded.
- To have a useful life of 60 years, with normal maintenance and replacements of parts/components subject to normal wear and deterioration.

8.2.2.3 Codes, Standards, and Regulatory Guidance

The following listed documents, codes, standards, and guidelines are used in the fire protection program and FPS design for the ESBWR U.S. design. Comparable codes and standards would be used for design destined for European sites.

American Society of Mechanical Engineers (ASME)

(1) ASME Boiler and Pressure Vessel Code, Section IX, Welding Qualification

American National Standards Institute (ANSI)

(1) B31.1, Power Piping Code

(2) N45.1, Cleaning of Fluid Systems and Associated Components for Nuclear Power Plants

American Society for Testing and Materials (ASTM)

(1) ASTM E84, Method of Test of Surface Burning Characteristics of Building Material

(2) ASTM E-119, Fire Test of Building Construction Materials

Factory Mutual

(1) Factory Mutual Approval Guide

Institute of Electrical and Electronics Engineers, Inc.

(1) IEEE 383-1974, Standard for Type Test of Class 1E Electric Cables

(2) IEEE 384-1981, Criteria for Independence of Class 1E Equipment and Circuits

National Fire Protection Association (NFPA)

(1) NFPA 10, Portable Fire Extinguishers - Installation

(2) NFPA 10A, Portable Fire Extinguishers - Maintenance and Use

(3) NFPA 11, Foam Extinguishing Systems

(4) NFPA 12, Carbon Dioxide Systems

(5) NFPA 13, Sprinkler Systems

(6) NFPA 14, Standpipe and Hose Systems

(7) NFPA 15, Water Spray Fixed Systems

(8) NFPA 20, Standards for the Installation of Centrifugal Fire Pumps

(9) NFPA 22, Water Tanks

(10) NFPA 24, Private Fire Service Mains and their Appurtenances

(11) NFPA 26, Recommended Practices for the Supervision of Valves Controlling Water Supplies for Fire Protection

(12) NFPA 30, Flammable and Combustible Liquids Code

(13) NFPA 37, Combustion Engines and Gas Turbines

(14) NFPA 70, National Electric Code

(15) NFPA 72D, Proprietary Protection Signaling Systems

(16) NFPA 72E, Automatic Fire Detectors

(17) NFPA 80, Fire Doors and Windows

(18) NFPA 80A, Protection from Exposure Fire

(19) NFPA 90A, Air Conditioning and Ventilating Systems

(20) NFPA 196, Fire Hose

(21) NFPA 204, Smoke and Heat Venting Guide

(22) NFPA 251, Fire Test, Building Construction and Materials

(23) NFPA 252, Fire Tests, Door Assemblies

(24) NFPA 255, Building Materials, Test of Surface Burning Characteristics

(25) NFPA 803, Standard for Fire Protection for Light Water Nuclear Power Plants

Occupational Safety and Health Act (OSHA)

(1) Chapter IV, Title 29

NRC Regulations and Guidance

(1) 10CFR50.48, Fire Protection

(2) 10CFR50, Appendix A, GDC 3, Fire Protection

(3) NUREG-0800, Standard Review Plan (SRP) 9.5.1 Fire Protection Program Branch Technical Position CMEB 9.5-1

(4) NRC Policy Issue SECY-89-013

8.2.3 Inspection and Testing

Preoperational inspection and testing requirements for each fire protection system will be performed during the appropriate time of plant construction when the system can be turned over from the construction function to the preoperation and startup test function. After plant startup, periodic inspection and testing to assure system operability will conducted in accordance with approved procedures.

8.2.4 Instrumentation Requirements

Smoke detectors installed in the different fire areas provide signals for early detection and warning of fire. Heat detectors provide signals to actuate the automatic suppression system. Receipt of initiating signals from heat or activation of thermally triggered devices will actuate the automatic suppression system in the fire area.

Upon receipt of a signal from any of the area heat or smoke detectors, audible and visual annunciation is activated in the Fire Protection System control panel in the main control room. A local panel also alarms the fire condition.

When a portion of the fire water system activates, a low pressure switch set at 689 kPa starts the motor-driven fire pump automatically. If the motor-driven pump fails to start, the diesel engine-driven pump starts upon receipt of a low pressure signal of 655 kPa from another pressure switch. Both pumps are stopped manually. Either one or both pumps can be started manually from the FPS control panel in the main control room or locally at the pump house.

A pressure switch starts the 3.15 l/sec capacity, motor-driven jockey pump automatically at a gauge pressure of 724 kPa psig and stops the pump when system gauge pressure returns to 86 kPa .

Wet pipe sprinkler system operation is initiated when the ambient temperature rises to the melting point of fusible links on sealed sprinkler heads, thus causing the spray heads to open. The flow of water through alarm check valves energizes a flow switch that transmits the alarm condition to the fire protection panel in the main control room. Wet pipe sprinkler operation is terminated manually by shutting the outside screw and yoke valves.

Each pre-action sprinkler system is automatically actuated by a rate-compensated heat detector. The temperature sensor releases a tripping device to open the deluge valve, thus supplying water under pressure to the closed sprinkler heads. A rise in ambient temperature to

the melting point of the fusible links on the sealed sprinkler heads causes the spray heads to open. Actuation of the temperature responsive device also initiates a local alarm, and registers an alarm condition on the fire protection panel in the main control room.

The dry-pipe system from the air check valve to the sprinkler heads is pressurized with instrument air. On loss of air pressure, a low pressure switch energizes a local alarm and registers an alarm condition in the control room. Both deluge valve operation and loss of pressure in the sprinkler system are separately annunciated in the control room. High or low air supply pressure downstream of the pressure regulator to the dry-pipe system is annunciated in the control room.

Operation of a deluge sprinkler system is initiated by a fixed temperature detector. This sensor detects a fixed high temperature and releases a tripping device to open the deluge valve, thus supplying water under pressure to the open spray heads. Actuation of the temperature detector also initiates a local alarm, and registers the alarm condition on the fire protection panel in the control room, independently of water flow in the system. Manual release of the deluge valve also initiates local and remote alarms.

Zone and area detection systems and circuits are continuously monitored at local control panels.

All heat and smoke detection systems are electrically supervised to detect circuit breaks, ground faults, and power failure.

8.2.5 Post-Accident Water Makeup and Coolant

The FPS has the capability to provide water makeup to the Fuel and Auxiliary Pool Cooling System (FAPCS) following any post accident scenario where the fire pumps have the capability to operate. An emergency connection can be made at a point at which the two systems can readily be connected, by first removing blind flanges and inserting spool pieces between the FPS and the Fuel and Auxiliary Pool Cooling System (FAPCS).

9. Turbine Island Design Description

It is difficult to completely standardize the plant design beyond the nuclear island. In addition to utility preferences in the steam and power conversion system, there are also site-unique issues, such as the ultimate heat sink location and temperature which can play a significant role in the selected configuration. What follows therefore, is an example configuration, showing one possible implementation. Changes in this part of the plant will not have any significant impact on the Nuclear Island design or operation.

The turbine building houses all equipment associated with the main turbine generator and other auxiliary equipment. The turbine employs a conventional regenerative cycle with condenser deaeration and condensate demineralization. The turbine generator is equipped with an electrohydraulic control system and supervisory instruments to monitor performance. The gross electrical output of the turbine generator is approximately 1380 MWe to 1400 MWe depending on site.

9.1 Steam and Power Conversion System

The components of the steam and power conversion system are designed to produce electrical power utilizing the steam generated by the reactor, condense the steam into water, and return the water to the reactor as heated feedwater, with a major portion of its gaseous, dissolved, and particulate impurities removed in order to satisfy the reactor water quality requirements.

The steam and power conversion system includes the turbine portion of the main steam system, the main turbine generator system, main condenser, condenser evacuation system, turbine gland seal system, turbine bypass system, extraction steam system, condensate cleanup system and, the condensate and feedwater pumping and heating system. The heat rejected to the main condenser is removed by a circulating water system and discharged to the power cycle heat sink.

Steam, generated in the reactor, is supplied to the high-pressure turbine and the steam reheaters. Steam leaving the high-pressure turbine passes through high velocity moisture separators and in-line reheaters prior to entering the low-pressure turbines. The steam reheater drains are drained to the final feedwater heater (#6). The moisture separator drains are drained to the fourth feedwater heater. All six feedwater heaters cascade their drains back to the preceding feedwater heater and the first heater cascades this total drainage back to the condenser hotwell.

Steam exhausted from the low-pressure turbines is condensed and deaerated in the condenser. The condensate pumps take suction from the condenser hotwell and deliver the condensate through the filters and demineralizers, gland steam condenser, Steam Jet Air Ejectors (SJAE) condensers and the first three low pressure feedwater heaters, to the feedwater heater number 4. Feedwater heater number 4 is a direct contract heater which then provides suction for the feedwater and feedwater booster pumps. The feedwater booster pumps deliver the feedwater through the high-pressure feedwater heaters (number 6 & 7) to the reactor.

The steam and power conversion system main features are shown in Figure 9.1-1 and shown in more detail in the "Proposed (Simplfied) Heat Cycle Schematic Diagram", located in Appendix A. One assumption for the ESBWR steam and power conversion system is that the condenser is a triple pressure condenser. This type of condenser and other site dependent ESBWR features and parameters are reported herein based on a typical central European site oe centroal US site conditions with cooling towers as the ultimate heat sink.

Normally the turbine power cycle utilizes all the steam being generated by the reactor; however, an automatic pressure-controlled turbine bypass system designed for approximately 110% of the rated steam flow is provided to discharge excess steam directly to the condenser. This feature allows full load reject capability without affecting the Nuclear Island. For the US plant, a 33% bypass system capacity will be analyzed.

9.1.1 Turbine Main Steam System and the Turbine Generator Set

The turbine main steam system delivers steam from the reactor to the to the turbine generator, the reheaters, the turbine bypass system, and the steam jet air ejectors (SJAE) from warm-up to full-load operation. The main steam system also supplies the steam seal system and the auxiliary steam system when other sources are not available.

The main turbine is a tandem compound, six flow, reheat steam turbine. For most European plants the turbine will rotate at 1500 RPM, while US plants utilize a 1800 RPM turbine. The last stage buckets of the turbine generator will be at least 132 cm in diameter. The turbine generator is equipped with an electrohydraulic control system and supervisory instruments to monitor performance. The gross electrical output of the generator is 1380 to 1400 MWe.

9.1.2 Main Condenser

The main condenser is a multi-pressure, three-shell type deaerating condenser. During plant operation, steam expanding through the low-pressure turbines is directed downward into the main condenser and is condensed. The environment is held at a low temperature by the circulating water system cooling the condenser and resulting in a below atmospheric pressure or vacuum. The main condenser also serves as a heat sink for the turbine bypass system, emergency and high level feedwater heater and drain tank dumps, and various other startup drains and relief valve discharges.

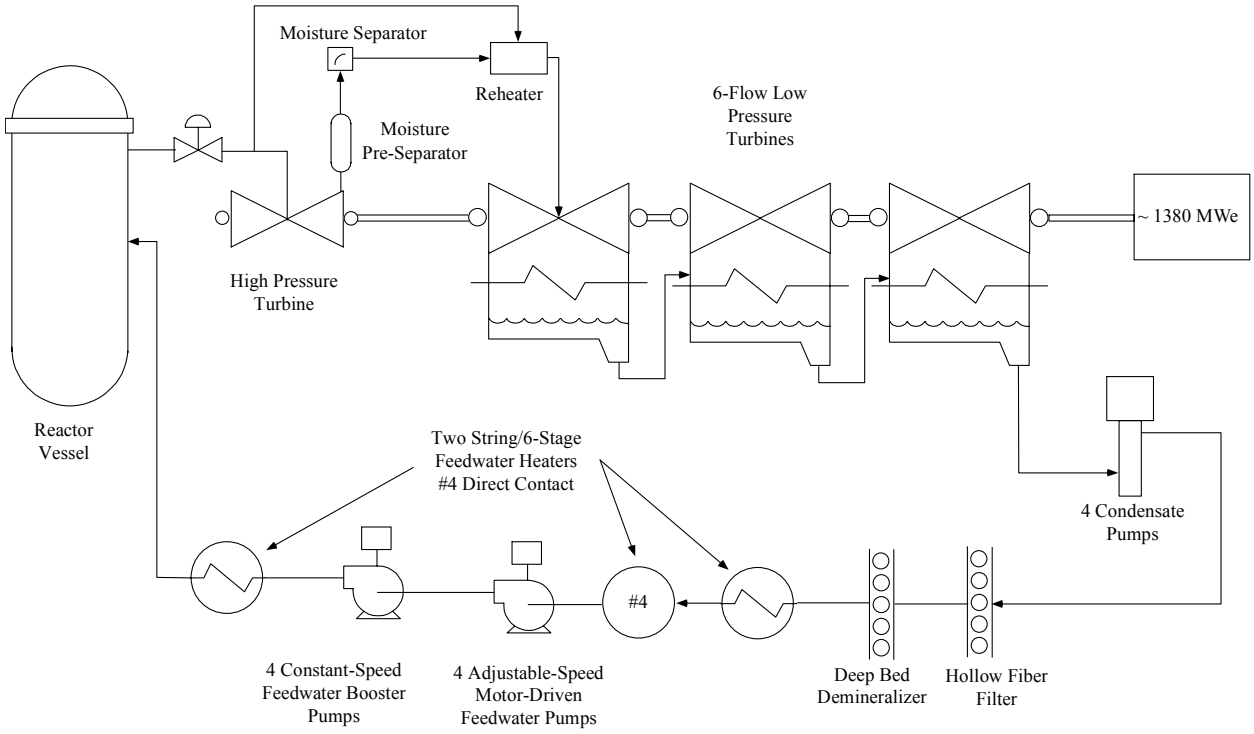

Figure 9.1-1 Simplified Power Cycle

9.1.3 Condenser Evacuation System

The main condenser evacuation system removes the noncondensible gases from the power cycle. The system removes the hydrogen and oxygen produced by radiolysis of water in the reactor, and other power cycle noncondensible gases, and exhausts them to the offgas system during plant power operation and to the turbine building compartment exhaust system at the beginning of each startup.

During the initial phase of startup, when nuclear steam pressure is not adequate to operate the SJAE units, the mechanical vacuum pump establishes a vacuum in the main condenser and other parts of the power cycle. The discharge from the vacuum pump is then routed to the turbine building compartment exhaust system, since there is little or no effluent radioactivity present. Radiation detectors in the compartment exhaust system and plant vent alarm in the control room if abnormal radioactivity is detected. Radiation monitors are provided on the main steamlines which trip the vacuum pump if abnormal radioactivity is detected in the steam being supplied to the condenser. The vacuum pump is water sealed to avoid potential explosion.

The SJAEs are placed in service to remove the gases from the main condenser after a pressure of about 0.034 to 0.051 MPa absolute is established in the main condenser by the mechanical vacuum pump and when sufficient nuclear steam pressure is available. The SJAEs consist of two 100% capacity, double stage, units (complete with intercondenser) for power plant operation where one SJAE unit is normally in operation and the other is on standby. The last stage of the SJAE is a noncondensing stage.

During normal power operation, the SJAEs are normally driven by cross-around steam, with the main steam supply on automatic standby. The main steam supply, however, is normally used during startup and low load operation, and auxiliary steam is available for normal use of the SJAEs during early startup, should the mechanical vacuum pump prove to be unavailable.

9.1.4 Moisture Separator Reheater System

The moisture separator and reheaters serve to dry and reheat the high pressure turbine steam exhaust before it enters the low pressure turbines. This improves cycle thermal efficiency and reduces moisture-related erosion and corrosion in the low pressure turbines. The system incorporates high velocity separators (known as MOPS, SCRUPS) and in line reheaters (known as ROADS).

The use of the high velocity separators and in line reheaters allows for a more compact design, with a lower pressure drop and still maintain the high efficiency necessary. There are no intercept valves required and less piping, tanks and instrumentation. The moisture pre-separators (MOPS) are installed in the crossunder pipe directly below the high pressure turbine exhaust (usually four in parallel). Two special crossunder pipe separators (SCRUPS) are installed in series downstream of the MOPS whereby the MOPS and the first SCRUPS can be installed as combined apparatus. The reheater of advanced design (ROAD) is installed downstream of the second SCRUPS. The MOPS or pre-separators removes some of the moisture (to about 0.5%) before sending the mixture on to the SCRUPS. The separators are pipe elbows designed with hollow turning vanes. The water droplets are unable to follow the flow of the steam as a result of their higher density and impinge against the vanes. A water film is formed which is removed by suction through slots into the interior of the vanes. Water and transport steam flow from the interior of the vanes to the outer chamber of the SCRUPS and from there to the corresponding feedwater heater stage. The steam then flows through the tubes of the ROADS where the steam is superheated by extraction steam condensing on the outer surface of the tubes.

9.1.5 Turbine Gland Steam System

The turbine gland steam system provides steam to the turbine glands and the turbine valve stems. The system prevents leakage of air into or radioactive steam out of the turbine shaft and turbine valves. The gland steam condenser collects air and steam mixture, condenses the steam, and discharges the air leakage to the atmosphere via the main vent by a motor-driven blower.

9.1.6 Turbine Bypass System

The turbine bypass system provides the capability to discharge main steam from the reactor directly to the condenser to minimize load reduction transient effects on the nuclear island. The system is also used to discharge main steam during reactor hot standby and cooldown operations.

The turbine bypass system consists of (1) a multi-valve chest that is connected to the main steamlines upstream of the turbine stop valves and (2) three dump lines that separately connect each bypass valve manifold outlet to one condenser shell. The system is designed for 110% bypass capacity which provides the capability to shed 102% of the turbine-generator rated load without causing a reactor scram or opening any of the safety relief valves. For the US plant, a bypass system with 33% capacity will be analyzed.

The turbine bypass valves are opened by redundant signals received from the Steam Bypass and Pressure Control System whenever the actual steam pressure exceeds the preset steam pressure by a small margin. This occurs when the amount of steam generated by the reactor cannot be entirely used by the turbine. This bypass demand signal causes fluid pressure to be applied to the operating cylinder, which opens the first of the individual valves. As the bypass demand increases, additional bypass valves are opened, dumping the steam to the condenser. The bypass valves are equipped with fast acting servo valves to allow rapid opening of bypass valves upon turbine trip or generator load rejection.

The bypass valves automatically trip closed whenever the vacuum in the main condenser falls blow a preset value. The bypass valves are also closed on loss of electrical power or hydraulic system pressure. The bypass valve hydraulic accumulators have the capability to stroke the valves at least three times should the hydraulic power unit fail.

When the plant is at zero power, hot standby or initial cooldown, the system is operated manually by the control room operator or by the plant automaton system. The measured reactor pressure is then compared against, and regulated to, the pressure set by the operator or automation system.

9.1.7 Steam Extraction System

Extraction steam from the high pressure turbine supplies the last two stages of feedwater heating and extraction steam from the low pressure turbines supplies the first three stages.

9.2 Condensate and Feedwater System

The condensate and feedwater system provides the dependable supply of high-quality feedwater to the reactor at the required flow, pressure, and temperature. In effect this systems takes the subcooled condensate from the hotwell of the condenser and increases pressure by use of pumps, and increases temperature by use of feedwater heaters, supplying the high temperature and pressure water to the reactor vessel. The condensate pumps take the deaerated, subcooled condensate from the main condenser hotwell and deliver it through the demineralizers, through the steam jet air ejectors (SJAE) and the gland steam condensers, through the offgas condenser, through the external drain cooler and to the first three feedwater heaters. Refer to the ESBWR Condensate/Feedwater Schematic Diagram in Appendix A for details. The first three feedwater heaters (low-pressure) are physically located in the neck of the main condenser.

After leaving the #3 feedwater heater the condensate passes through the direct contact feedwater heater level control valves before dumping into the #4 feedwater heater which is a direct contact heater. Similar to many European fossil, PWR and BWR power cycles, the ESBWR uses a direct contact feedwater heater which in effect is a large tank which provides a stored quantity equivalent to about 3 to 4 full-power minutes of feedwater in order to provide water for transient conditions. These transient conditions are handled by the feedwater and feedwater booster pumps plus the extra storage capacity of the direct contact heater. This allows minimizing the cost of the condensate pumps and system because now they must be designed for only steady state conditions. The direct contact feedwater heater is physically located on the turbine operation deck since the water supply is essentially saturated water and to provide the necessary Net Positive Suction Head (NPSH) for the feedwater booster pumps. The feedwater booster pumps are located in the basement of the turbine building, in order to provide the maximum amount of NPSH possible.

The feedwater booster pumps take suction from the #4 direct contact feedwater heater and provide flow to the variable speed feedwater pumps. The feedwater pumps provide the required feedwater flow to the number 5 and 6 high pressure feedwater heaters and then to the reactor. The feedwater booster pumps and feedwater pumps are connected to the same motor. One end of the motor shaft supplies the necessary power to drive the booster pumps at a constant speed. The other end of the motor shaft drives through a variable speed hydraulic coupling supplying power to the feedwater pump.

The power cycle is designed with two strings of low pressure heaters (#1 - #3) in the condenser neck. This design permits 75% power operation with one string isolated and under repair. The design also utilizes two strings of high pressure feedwater heaters (#5 - #6) which permits one string to be isolated and the plant can still operate at 85% power. The power cycle employs four condensate pumps (37% each), four feedwater booster pumps (45% each) and four variable speed feedwater pumps (45% each). The feedwater booster pumps and feedwater pumps are higher capacity in order to meet the requirement for the feedwater system to provide 135% of rated flow to the vessel for transient situations. This transient flow requirement must be met with N-1 pumps operating and following any pump trip the avoidance of a reactor scram must be possible. One important aspect of the power cycle system requirements is that no single failure shall cause a plant trip.

10. Reactor Refueling and Servicing

10.1 Reactor Refueling

In order to reduce the cost of operating a nuclear plant, the plant availability must be maximized and the length of a refueling outage minimized. The refueling and servicing equipment is very important to control the length of the outage; therefore design of this equipment is intimately tied to the design of the reactor pressure vessel and the vessel internals. Parallel design efforts must be considered as the RPV and internals are configured, in addition to serious considerations for arrangement of interfacing building and structures.

The following sections describe the major operations of a typical refueling and servicing outage for the ESBWR. In addition the components used in these operations are discussed in more detail.

10.1.1 Refueling Machine

One of the longest critical path operations performed during the outage is removing and replacing the fuel. The robotic refueling machine allows faster, fully automated operation and allows the handling of two fuel assemblies at the same time. This design is different from current BWR designs, (a) because of its lighter weight, making increased acceleration and speed possible, (b) because of its control system which makes locating the fuel assembly more dependable and faster, and (c) because of its dual handling system allowing simultaneous fuel movements.

The design uses two robotic arms to span a designated area of the vessel and the fuel storage area. Attached to the end of each robotic arm is a lightweight telescoping mast with a pendant attached to the end of each mast. The pendant acts as the base unit, allowing attachment of any number of end effectors depending on the servicing or inspection operation. Housed within the pendant are two television cameras used for the positioning control system. The control system is adapted from the robotics field using the technology known as machine vision, which provides both object and character recognition techniques to enable relative position control rather than absolute position control as in past designs. The pendant also contains thrusters that are used for fast, short distance, precise positioning.

The robotic refueling machine system design is capable of a complete off load and reload of an 1020 element core in about 7 days compared to 17 days for a conventional system. A complete fuel offload is conservative since most BWR's offload only the required number of spent fuel assemblies (~ 30 to 35%), shuffle the remaining fuel and then load new fuel assemblies to replace the necessary fuel.

The ESBWR has a refueling depth about 9 meters deeper than the Advanced Boiling Water Reactor (ABWR). It was recognized that improved accuracy, speed and reliability were required to accommodate this extra depth. It was also recognized that existing refueling machine designs probably could not accommodate the additional depth and allow for automated fuel handling without major modifications or redesign, because of the positioning requirement for accuracy and higher speed.

Even with the increased refueling depth of the ESBWR design, it was recognized that the speed of refueling should be vastly improved. Considering all the activities that take place on the refueling floor during an outage, the most time-consuming activity is moving fuel itself. For example, an estimate for a theoretical 17-day outage shows that the movement of fuel with a conventional system requires nearly 50% of the total time required for refueling and servicing. Building upon the SBWR design experience, a considerable effort was applied to a critical examination of conventional refueling machines and their masts and grapples, in order to devise a fundamentally new design for moving fuel that is faster and, at the same time, increases the safety and reliability. From this effort came the robotic refueling machine design.

10.1.1.1 Design Philosophy

Since moving fuel is highly repetitive, it is an ideal target for automation. However, the older, conventional refueling machines were not designed to be automated. To attempt to automate these machines by simply adding new controls would not increase the performance, safety or reliability. One very important reason is, the absolute positioning approach used in current Japanese and European refueling machine designs, results in a very massive structure and a very heavy telescoping mast, both of which must be accurately positioned. The new design objective must be in exactly the opposite direction, i.e.; to minimize the mass of the components that are position controlled.

The new design objectives for the ESBWR refueling machine are achieved by applying object and character recognition techniques to enable relative position control rather than absolute position control. This change facilitates a reduction in weight of all components and thus increases position reliability. An important consequence of the very substantial reduction in the weight of the refueling mast is to utilize two robotic arms to move two fuel assemblies simultaneously with increased position reliability of each.

All current refueling machines utilize absolute positioning to achieve a predetermined repeatable Cartesian coordinate set in the horizontal (X-Y) plane. This design has several undesirable characteristics and limitations, principally in relation to the cost of achieving the necessary position accuracy for a given depth of the fuel.

In absolute positioning, the position of the fuel in the core is assumed to have a fixed position relative to a corresponding position on the rail of the bridge or the rail of the trolley. An encoder (typically optical digital) provides an absolute coordinate of the bridge or trolley position. The bridge and trolley are moved to the desired position and the mast with its grapple lowered to the level of the fuel in the core. In this design, deflections and clearances need to be minimized. Consequently, the bridge and trolley structures are designed to be very rigid and are therefore massive structures. Because of the large mass, a small amount of lost motion or stored energy in the drive train becomes a source of position error and it is difficult to eliminate this error source entirely. Of course, there is the inherent difficulty of precisely positioning a large mass. In addition, speed of travel becomes a problem from the standpoint of controlled non-linear rapid acceleration and deceleration.

A concomitant problem is the conventional telescoping mast and grapple design. The fuel mast, a series of nested tubes that extend by sliding relative to each other like a telescope, must be very stiff, must be precisely machined and consequently is quite heavy.

For the mast, the design challenge is to minimize clearances between the tubes and simultaneously assure smooth motion as the mast extends. If the bearing clearances are set too tight, the result is stick-slip, which is described as follows. As the mast is being extended, one of the sections is supported by the friction of the bearing and remains stuck in place. Later, as the mast continues its descent, the section breaks free and drops to the stops of the next larger mast section. Because this condition has been experienced in operating plants, the distance that a mast section may drop is limited by a load sensor that stops the descent of the mast if the full load of each mast section is not transferred as the mast is extended. Thus, the design challenge for this design is a bearing design that never sticks but has zero clearance because bearing clearance introduces a non-repeatable position error.

There are many position errors that must be considered in the design and at least one error that can not be corrected in absolute positioning is the real variable position of the fuel in the core relative to the X-Y position indication given by the encoder. To achieve the needed repeatable position accuracy in the range of ± 15 to 20 mm at the core level in the reactor at a depth of about 17 m below the refueling floor is not only a design challenge, it is also expensive.

Relative positioning of the grapple with respect to the fuel was considered. In this design the grapple position is determined with respect to the fuel or other structure related to the fuel such as the top guide. Knowing this relative position, the grapple, mast and machine can be adjusted to locate the grapple directly over the fuel and in position to be grappled. This design uses the relative position of the grapple to control the machine, not relying upon the assumed position of the machine with respect to the fuel, thereby removing the inaccuracy of the mast and the position of the fuel with respect to the refueling floor. This technology is integrated with a computer based control system. This system achieves repeatable position accuracy of the grapple at the fuel level in the core, enabling the control system to provide the operator with a selection of manual, semi-automatic or full automatic mode for fuel transfer. The design is also easily applied to simultaneous movement of two or more fuel assemblies.

A three-dimensional view of the proposed new refueling machine design is shown in Figure 10.1-1.

Utilizing the position control scheme permits the structure to be more flexible because positioning the grapple over the fuel is very loosely related to the rigidity of the structure, i.e., the position error of the structure may be as large as ± 100 mm. In addition, the total weight of conventional mast, trolley and related equipment would be expected to be slightly heavier than that of two robotic arms, two masts and hoists with fuel. This result is possible due to the very large reduction in the weight of the mast and because the entire control system is located in a specially designed control room, not on the refueling machine.

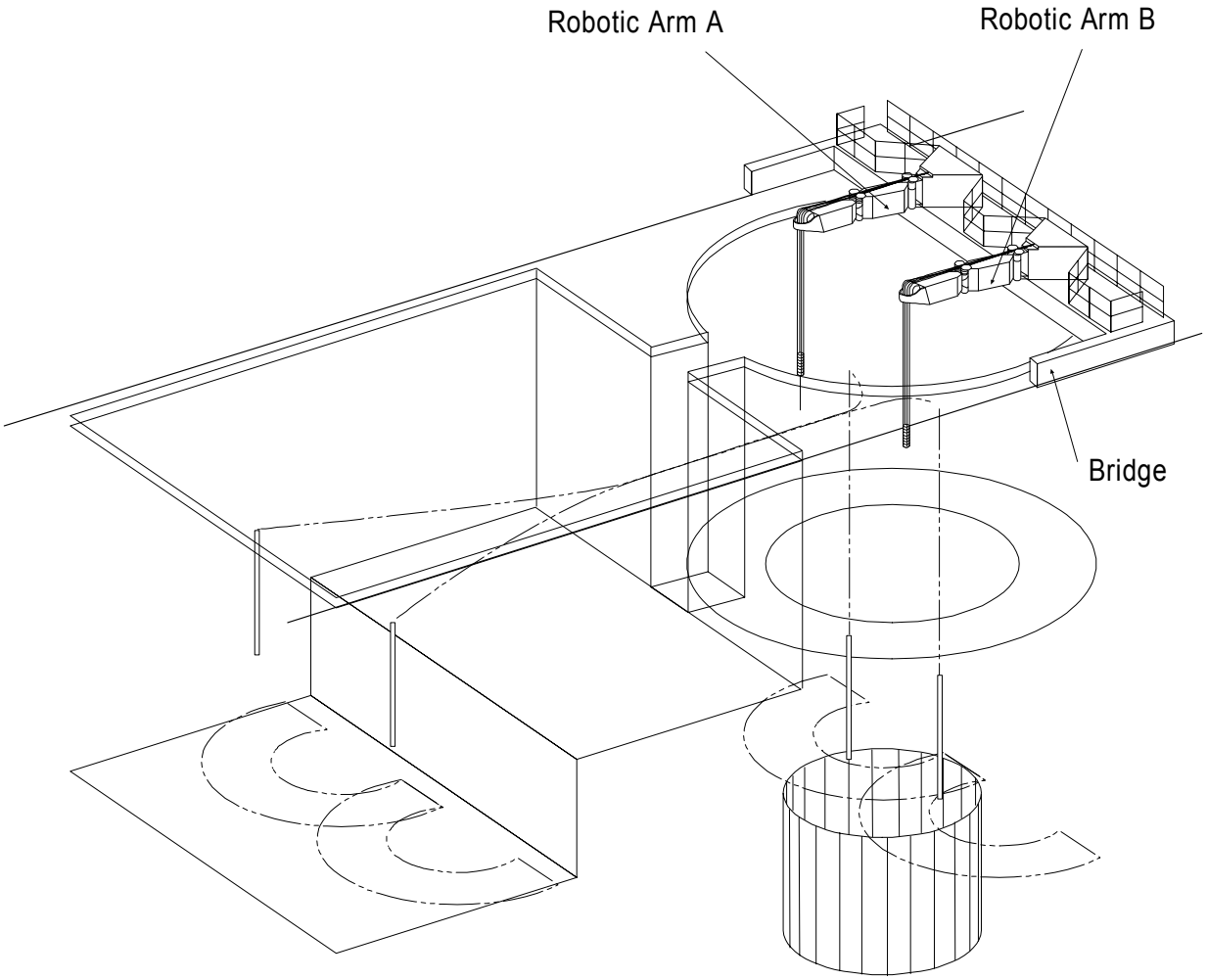

Figure 10.1-1
Robotic Refueling Machine

10.1.1.2 Robotic Arm

Current BWR refueling machines use a moveable bridge for the “x” direction and a large movable trolley for the “y” direction. The concept of a cantilevered four bar link was considered as an alternative to simplify the handling requirements and improve the overall reliability of the fuel movement path during a refueling outage. In reviewing the capabilities of the German crane manufacturer, NOELL, GmbH, it was discovered they had already manufactured similar types of robotic arms. The concept was discussed with NOELL and Germany's research center Kernforschungszentrum in Karlsruhe (KfK), since they had designed and constructed, respectively, the Next European Torus (NET) articulated boom prototype known as "EDITH" for Experimental Device for In-torus Handling. The conceptual designer of the NET prototype was KfK and the detail designer and manufacturer was NOELL.

The idea of using a robotic arm, similar to EDITH, was studied, developed and finally expanded to using dual robotic arms attached to a light weight, low profile, refueling machine.

10.1.1.3 Mast

Since the telescoping mast in this design is not an essential element of positioning, it has been conceived from the beginning as a very light relatively flexible set of nested tubes. However, for any design of this type, the number of tubes needed depends on the retracted length, the overlap between tubes and the extended length. The level of flexibility and position repeatability when retracting and extending the tubes depends on tube straightness, clearance between the tubes, overlap and spacer design. More tubes generally means a greater vulnerability to manufacturing tolerances of the individual tubes, length of the overlap and the spacer design for a given position accuracy. This vulnerability was particularly important for previous designs (the system used in most currently operating reactors) in which overall position accuracy was directly dependent on the accuracy of the telescoping mast. The consequence of this dependence was a very expensive, very heavy, accurately machined set of nested stainless steel tubes. To emphasize this point, the German KRB telescoping mast design is estimated to weigh about 1400 Kg in air while the ESBWR design utilizing polyethylene is estimated to weigh about 30 Kg in air and about 10 Kg submerged.

The design does not depend directly on the position repeatability of the mast; nevertheless the mast should not inhibit the ability of the pendant to define its correct location over the fuel to be grappled and to be positioned by the robotic arm from above. This suggests that the mast need not be stiff but it should have a relatively fixed spring constant, i.e., it should have very little lost motion as it is extended or retracted. Although some lost motion could be accepted, excessive looseness could result in hunting*, which* would be an unwelcome time delay in grappling fuel. The precise definition of the minimum stiffness required to avoid this potential problem is difficult to define, however with the addition of thrusters to the pendant the stiffness requirements for the telescoping tubes becomes a minor consideration. Nevertheless, fewer tubes in the telescoping mast is desirable because the assembly has fewer parts, is lighter and less expensive.

The mast arrangement is a three moving section (and one stationary section) mast constructed of polyethylene plastic, as shown in Figure 10.1-2.

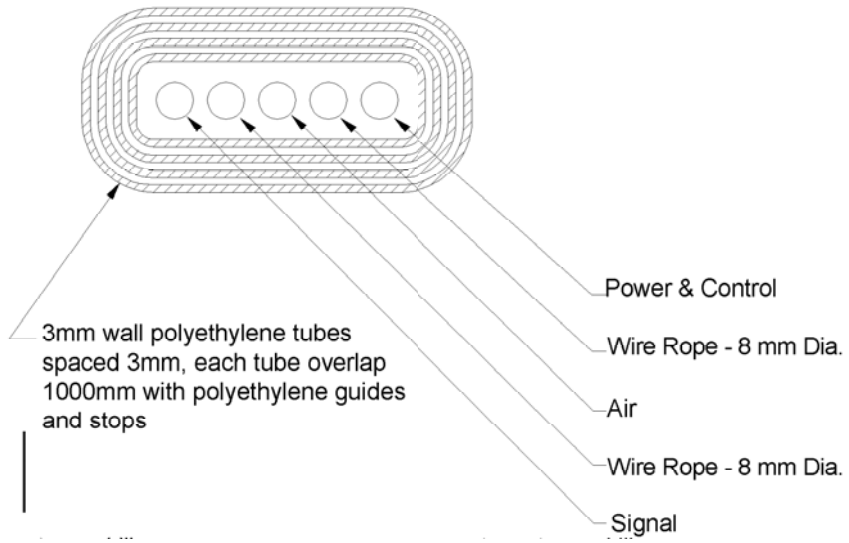

Figure 10.1-2

Cross-Section Four Element (3 Moving and 1 Stationary) Telescoping Mast

10.1.1.4 Pendant

The pendant is a carrier of various end effectors, e.g., fuel grapple, and provides position information to control the location of the robotic arm, discussed in more detail below. The heart of the design is the application of object and character recognition commonly referred to as machine vision, which is widely used in the robotic industry. The software and hardware for control systems integrating machine vision are available off-the-shelf. The only new feature is underwater operation of the pendant in a radiation field

Developments in underwater Remotely Operated Vehicles (ROV's) is applied to the pendant to improve its performance and reduce its cost. Three ROV developments important to the pendant design are; compact underwater cameras with lights, thrusters for local fine position control in the X-Y plane, and ultrasonic indicators for position verification and collision avoidance. A pendant configuration that takes advantage of these developments is shown in Figure 10.1-3. The diameter of the cylindrical body is 230 mm and the two TV cameras are located inside the cylindrical body of the pendant thus eliminating the need for external cameras. With the TV cameras located inside the pendant the opportunity to harden the cameras to improve the long term reliability is improved.

As shown in Figure 10.1-3, four thrusters, perpendicular to each other, have been incorporated for fine motion position control in the X-Y plane. The thrusters are utilized in the position control scheme, as follows.

The pendant and its load are supported by two cables. A light weight plastic telescoping mast is provided as a shroud for the support cables and the pendant's umbilical cords. With this

arrangement, the robotic arm and platform control systems provide the needed high speed gross positioning of the pendant for grappling and moving fuel. The gross positioning is expected to be accurate to within ± 100 mm utilizing computer resident position tables. After reaching the gross position, the platform structure is temporarily locked in place. Then, as the pendant is being lowered, cameras provide the imaging necessary for the software to determine the location of the pendant relative to the position required for grappling the fuel (or other core components). In this phase, position control is passed to the machine vision component of the control system. This intermediate positioning process is expected to be accurate to within about ± 10 mm at a distance ranging from 4000 mm to 1000 mm above the level of the fuel bail to be grappled. The speed of descent of the pendant is gradually reduced and the thrusters position the pendant within about ± 2 mm of the true position for grappling at distance ranging from 1000 mm to 100 mm above the fuel bail. The telescoping mast is sufficiently flexible to permit an initial 20 mm motion, however as the pendant is slowly lowered the last 1000 mm, the robotic arm is moved at the level of the gimbals to the exact X-Y position above the pendant while its position is maintained by the thrusters.

Angular position is achieved at the top of the telescoping mast near the gimbals and the thrusters are used, as described above, to assure fine motion position control. The use of thrusters make possible a very light flexible plastic telescoping mast design which is used only as a guide for the support cables and pendant umbilical cords.

Normally a problem with moving a load hanging on the end of a cable is its tendency to swing after the positioning robot has stopped. This tendency is eliminated by a smart position control system. Depending on the programmed acceleration and deceleration, the exact amount of over control necessary to eliminate swinging is calculated by the control system and becomes part of the motion control sequence. This type of smart control has been developed and used by Sandia National Laboratories for heavy cask handling.

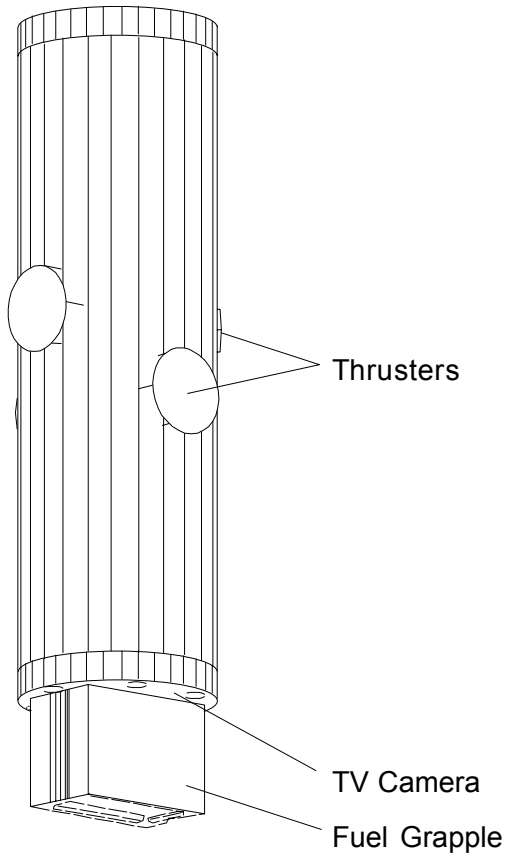

Figure 10.1-3 Isometric of New Pendant Configuration

10.1.1.5 End Effectors

The end effectors to be used for the robotic arms are designed to accommodate varied operations at different times in the refueling and servicing. The end effectors are designed to be easily removed (less than 0.10 hour). This design is widely used in the robotics field in which a certain robotic device is adapted for many operations by simply changing its end effector. The operations accommodated would be fuel handling, control rod blade handling, incore instrument handling, guide tube handling, neutron source handling, inservice inspection, and fuel verification.

10.2 Inclined Fuel Transfer System (IFTS)

The inclined fuel transfer system is used to transfer fuel, control rods, defective fuel storage containers, and other small items between the refueling floor of the reactor building and the auxiliary fuel building pools by means of a carriage traveling in a transfer tube (a 23-inch ID stainless steel pipe).

In the buffer pool of the reactor building, the transfer tube connects to pool penetration and to a sheave box. Connected to the sheave box is a 24-inch flap valve, a vent pipe, cable enclosures, and a fill valve. In the auxiliary fuel building pool, the transfer tube connects to a 24-inch gate valve. A bellows connects the building penetration to the valve and transfer tube to prevent water entrapment between the tube and penetration.

A 4-inch Weldolet located on the transfer tube approximately 2 feet above the fuel building pool water level and a motor-operated valve are provided for connections to a drain pipe for water level control in the transfer tube.

A hydraulically actuated upender is provided in each pool for rotating part of the carriage, the tilt tube, to the vertical position for loading and unloading and to the inclined position for transfer. The carriage consists of the tilt tube and a follower connected with a pivot pin, which allows upending of the tilt tube while maintaining the follower in the inclined position. The carriage has rollers and wheels, which ride on tracks within the transfer tube and upenders to assure low friction, correct carriage orientation, and smooth transition across valves and between other components. The tilt tube is designed to accept two different inserts - a fuel bundle insert with a two-bundle capacity and a control rod insert for control rods, defective fuel storage container, and other small items.

A winch, located on the refueling floor, uses two cables attached to the lower end of the follower for pulling the carriage from the auxiliary fuel building to the refueling floor and for controlling the carriage descent velocity. A slow winch speed is provided for starting and stopping the carriage to limit the acceleration on the fuel assemblies. Cable underload and overload protection is provided by a load cell. Carriage position readout is provided. Cable enclosures, attached to the sheave box and projecting above the buffer pool water level, provides the means for cable exit from the transfer tube while isolating the pool water from the tube. A vent pipe with a fluid stop connected to the reactor building ventilation system isolates the displaced air in the tube during filling from the reactor building atmosphere and confines the water surge to the pool water.

A hydraulic power unit is provided in each building to actuate the cylinders attached to the upenders, the fill valve, the flap valve, and the fuel building gate valve. In both buildings, the pool area in which the transfer system components are located is physically separated from the fuel storage area by a concrete wall which serves as a positive barrier to prevent fuel in the storage area from being uncovered in the event of loss of pool water through the transfer system. In addition, these walls are provided with gates to allow drainage of the transfer pool areas for maintenance and/or removal of the transfer tube and components. Control panels are provided in close proximity to each transfer pool area and are connected for voice and interlock communication. The reactor building and auxiliary fuel building panels have control buttons for

actuating their respective upender, a button for initiating the transfer sequence to the other building and a stop button. The transfer operation functions on an automatic basis with provision made for manual override.

Automatic sequencing is accomplished by use of an electronic controller located in the fuel building, which utilizes sensors for confirming the successful completion of each step before initiating the next step. The completion of a transfer sequence is signaled at the control panels. Interlocks assure the correct sequencing of the transfer system components and fuel handling equipment during automatic or manual override operation. Interlocks prevent the refueling machine from moving into the reactor building transfer area (buffer pool) unless the upender (7) is in the vertical position and prevent upender movement if the refueling machine is in the transfer area. Interlocks prevent the fuel handling platform from moving into the auxiliary fuel building transfer area unless the upender (31) is in the vertical position and prevent movement of the upender if the platform is in the transfer area.

The operational sequence for the fuel transfer system is described as follows. As a starting point, assume the carriage (24) is in the reactor building buffer (transfer) pool with the tilt tube (24A) supported by the upender (7) in the inclined position. In this position, the sheave box cover (11), the fill valve (13) and manual gate valve (17) are open with the bottom gate valve (25) and drain valve (27) closed.

The operational sequence is as follows:

a. The hydraulic cylinder (9) is actuated to push the upender and tilt tube (7 and 24-A) to the vertical position.

b. Load and unload fuel, control rods or other items into and from the tilt tube.

c. The hydraulic cylinder (9) is actuated to pull the tilt tube into the inclined position for transfer.

d. The automatic operation is started by depressing the transfer button on the refueling floor control panel. This starts the winch (1) unwinding the cables to lower the carriage (24).

e. The carriage is stopped approximately 2 feet above the bottom gate valve (25).

f. The sheave box cover (11) and fill valve (13) are closed.

g. The drain valve (27) is opened and water is drained to the level of drain pipe attachment to the transfer pipe (20).

h. The bottom gate valve (25) is opened.

i. The winch lowers the carriage until it is stopped and supported by the pivot arm framing (32).

j. The hydraulic cylinder (9) is actuated to push the upender (31) and tilt tube (24-A) to the vertical position.

k. Unload and load cargo.

1. The hydraulic cylinder is actuated to lower the tilt tube and upender to the inclined position.

m. The winch is actuated by depressing the fuel building control panel's transfer button and pulls the carriage (24) to a position approximately 2 feet above the bottom gate valve (25) where it is automatically stopped.

n. The bottom gate valve (25) and drain valve (27) are closed.

o. The fill valve (3) is opened and transfer tube filled.

p. The sheave box cover (11) is opened when sensors indicate that the transfer tube (20) and vent pipe (4) are filled with water.

q. The carriage is pulled to the refueling buffer (transfer) pool (starting point).

After transfer operations are completed, the carriage will be stored in the reactor building buffer pool on the upender (7).

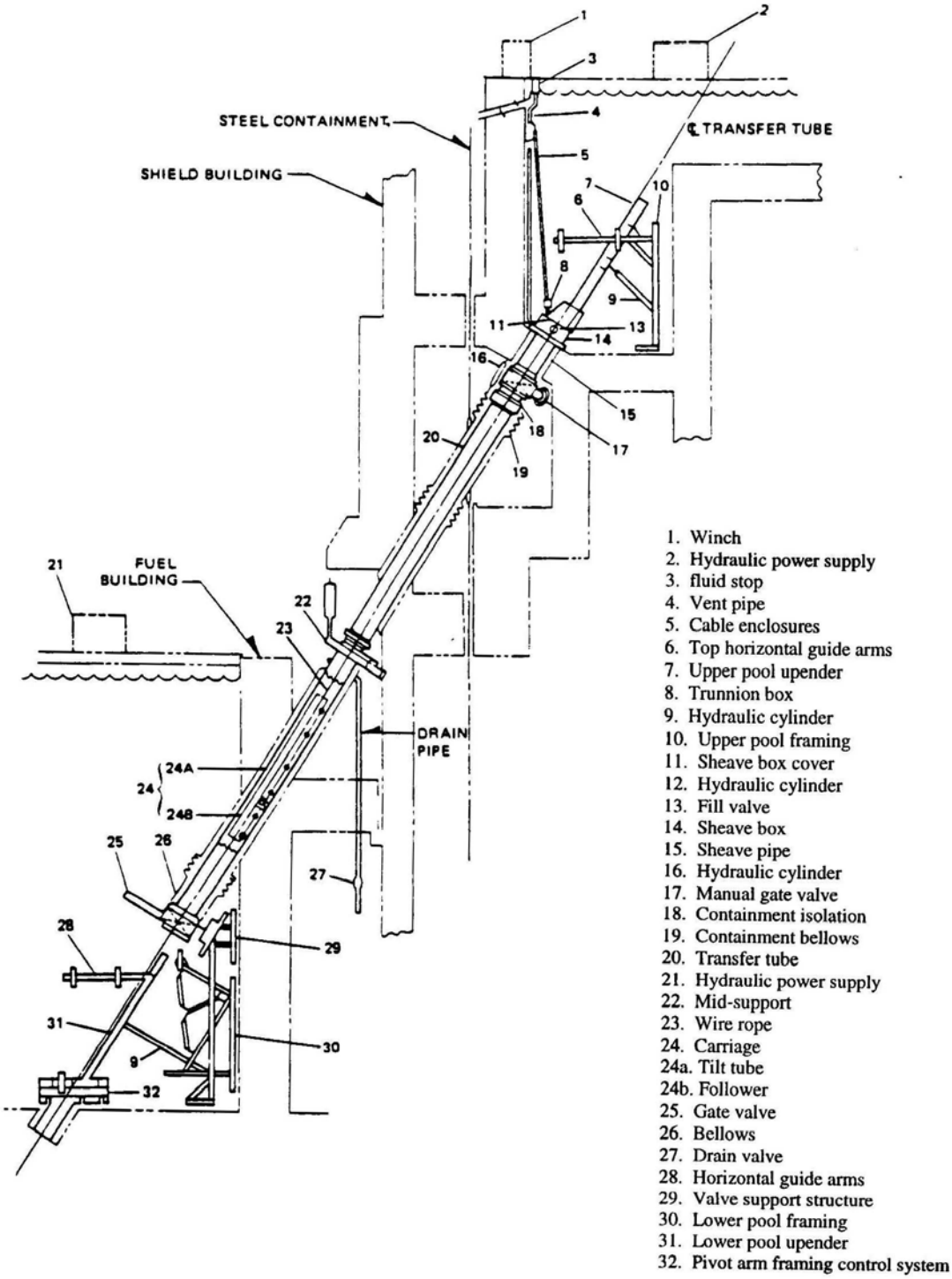

Figure 10.2-1
Inclined Fuel Transfer System

A. Reactor building transfer pool
B. Isolation valve room
C. Fuel building transfer pool
1. Shield building
2. Steel containment
3. Cable winch
4. Roller track and support structure
5. Ram actuator cylinder (swivel mount)
6. Flapper valve
7. Sheave box
8. Water inlet valve
9. Isolation valve
10. Adapter
11. Bellows
12. Guard tube (32 in. ID typical)
13. Transfer tube support box
14. Water exit valve
15. Radiation shielding
16. Fuel building wall
17. Refueling floor level
18. Valve
19. Lift cable (typical of 2)
20. Tilting tube (containing 2 fuel bundles)
21. Ram actuating mechanism
22. Carriage (with roller and cable attachment)
23. Pivot point
24. Accommodation pit
25. Roller track and support structure
26. Ram actuator cylinder (swivel mount)
27. Ground level

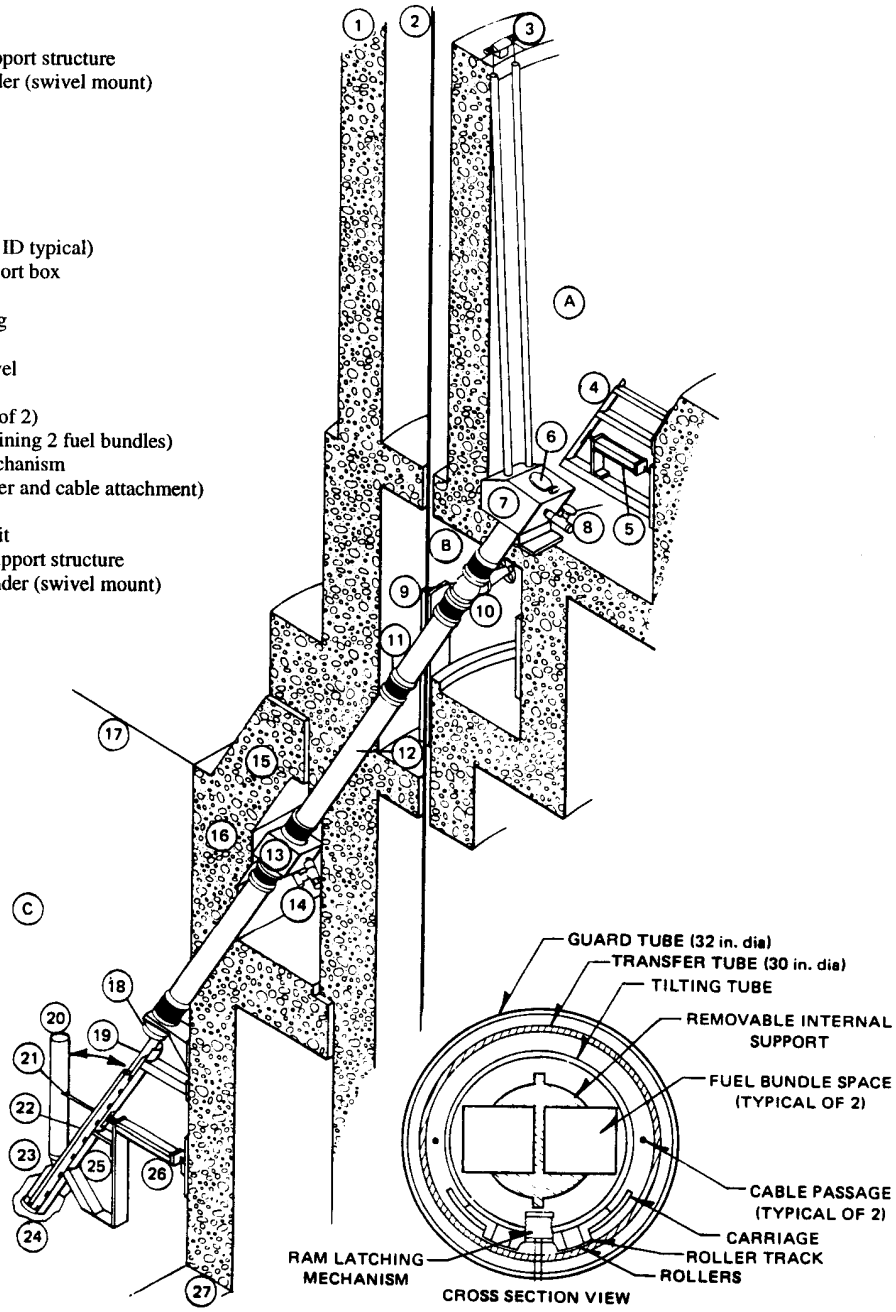

Figure 10.2-2
Inclined Fuel Transfer System – Isometric View

10.3 Servicing Equipment and Systems

10.3.1 RPV Servicing Equipment (F13-E000)

10.3.1.1 Wet Transfer of Dryer and Separator

The steam dryer assembly and steam separator assembly is transferred to the storage pool under water in order to reduce personnel radiation exposure and prevent airborne contamination. In addition this feature allows the water level in the reactor cavity to be raised earlier in the refueling outage.

The "REM*Light" package utilized to allow the transfer of the dryer and separator will consist of the following:

a. Waterproof slings made of Dupont "Kevlar" (reg.) is utilized on the dryer and separator strongback, replacing heavy, hard to handle wire ropes and hook box.

b. Testable lightweight steam line plugs which can be installed from the refueling machine with the water level at its maximum.

c. Hi-torque pool service poles for separator unlatching

d. A service pole handling system attached to the refueling machine with a detachable auxiliary work platform aids in separator unlatching and many other in-core servicing activities.

10.3.1.2 RPV Servicing Tools (F13-E001)

These are miscellaneous tools and racks used to handle and store the various vessel head studs, nuts and washers.

10.3.1.3 Chimney Head Bolt Wrench (F13-E003)

The chimney head bolt wrench is used to loosen and tighten the nuts that retain the in-vessel chimney head and steam separator assembly. The wrench has an inner part used to engage the male section and an outer section that engages the nut. An attachment to the outer section permits the use of a torque wrench. The inner part restrains the male section from turning while the nut is being loosened. The inner tool is also used to remove the male section as required for removal of the chimney head and steam separator assembly from its seat. The operation is performed from the refueling machine.

10.3.1.4 Head Holding Pedestals (F13-E005)

Head holding pedestals are used to support the reactor pressure vessel head in an elevated position when removed from the vessel. Three pedestals are used and the head rests on aluminum pads to preclude damage to the seal surface.

The vessel head, when mounted on the pedestals, is approximately 3 feet from the floor, permitting servicing of the seal surface and the inside of the head. The pedestal's mounting

surface is 25 inches square and provides for eight 2-1/4 inch holes for securing to the service floor.

10.3.1.5 Dryer and Separator Strongback (F13-E008)

The dryer and separator strongback is a cruciform tool used in conjunction with the crane to remove both the team dryer assembly and the steam separator assembly (which includes the chimney head) separately from the reactor vessel and to transport them to the equipment storage pool. A bell housing on the end of each arm guides the strongback over the dryer-separator chimney head assembly lifting lugs. The attachment of the strongback to the steam dryer assembly

10.3.1.6 Head Strongback (F13-E009)

The head strongback is used to remove the reactor vessel head from the pressure vessel and transfer it to its storage location using the overhead crane. It also supports the stud tensioner equipment described under E013 below.

10.3.1.7 Stud Tensioning Equipment (F13-E013)

The stud tensioning system consists of the following basic items:

a. 4 hydraulic powered stud tensioners

b. 4 stud drive units

c. Remote manual power and control unit including pumps, gauges and fluid reservoirs.

d. Elongation measuring tool for each tensioner

e. Hoses, manifolds and other miscellaneous fittings to connect the power control unit to the tensioner and air supply

The stud de-tensioning operation starts by lowering the head strongback and carousel down to the vessel head. Each of the four tensioners are positioned on four of the 80 studs, hydraulic pressure is applied and the nut is backed off the required amount for the first pass. The tensioners are rotated to the next set of four studs. After two passes, loosening all of the studs, the stud drive units are positioned on four of the studs and backed out of the vessel flange. A spacer is then placed under each stud nut to hold the stud in place on the head flange. This procedure is repeated until all 80 studs are removed. The head, strongback, carousel, studs, and nuts are then transferred to the refueling floor for storage. Prior to placing the head on the pedestals, three of the studs are transferred to a rack in order to utilize the holes for the holding pedestal.

The above describes the basic RPV head stud tensioning and detensioning equipment. Optional equipment can be provided which allows automated tensioning of all or part of the studs. In additional, equipment is available to remove all studs automatically if this feature is desired.

10.3.1.8 Stud Cleaning Facility (F13-E020)

The stud cleaning facility is a small enclosure, installed on the refueling floor which is used to individually clean the reactor vessel studs once they have been removed by the vessel head stud tensioning device. The enclosure includes a set of wire brushes and high pressure water jet, which removes all crud and corrosion from the carbon steel studs.

10.3.1.9 Stud Flange Hole Seal (F13-E021)

The flange hole seals are installed in the stud holes located on the vessel flange after the studs have been removed and the stud hole threads have been cleaned. These seals keep the reactor water from penetrating while the reactor cavity is flooded.

10.3.1.10 Stud Flange Hole Cleaner (F13-E022)

The flange hole cleaner is a pneumatic powered device which is mounted on the vessel closure flange face and is used to clean the stud hole threads after the studs have been removed and before the seals are installed. The device is a manual, remotely operated device.

10.3.1.11 Stud Nut Cleaner (F13-E023)

The stud nut cleaner is a small enclosure used to power clean the stud nuts using an enclosed brushing chamber; thereby minimizing the release of airborne contamination and minimizing personnel handling. The nuts are rolled into the machine on their side.

10.3.1.12 Flange Sealing Surface Protector (F13-E024)

The flange surface protector is a stainless steel shield used to protect the sealing surface of the vessel flange once the studs have been removed. It protects from damage during periods when the vessel head is not in place.

10.3.2 RPV Internal Servicing Equipment (F14-E000)

10.3.2.1 Control Rod Grapple (F14-E002)

The control rod grapple is used to install and remove control rod blades while working from the refueling machine. Once the fuel assemblies are removed from the cell, the control rod can be removed. The control rod grapple is lowered on to the bail of the control rod blade and rotated 45° to unlatch the blade from the Fine Motion Control Rod Drive (FMCRD). The grapple is attached to the refueling machine pendant. The installation procedure is just reversed.

10.3.2.2 Dummy Fuel Bundle (F14-E016)

The dummy fuel bundle is a duplicate of an actual fuel assembly in all respects except that the dummy fuel rods are filled with lead shot instead of active fuel. The dummy fuel bundle weighs approximately 200 kg. This is approximately 50 kg less than an actual fuel assembly. The dummy fuel bundle is used to train personnel in all respects of fuel handling. It can be

distinguished from an actual fuel assembly by the DUMMY FUEL marking on the fuel bundle handle and by the yellow recognition plate mounted on the fuel bundle upper tie plate.

10.3.2.3 Guide Rod Handling Tool (F14-E021)

The guide rod is used to guide both the steam dryer and steam separator upon removal and installation from the vessel. The two guide rods are located 180° apart from one another, adjacent to the vessel wall. Because of the proximity of the two rods with respect to the main steam nozzles, the upper portion of the guide rod is removed during operation. The guide rod handling tool is used to install and remove the upper portion of the rods.

10.3.2.4 Surveillance Capsule Handling Device (F14-E022)

This tool is used to remove one of the vessel material surveillance capsules from its mounted position along the vessel wall, in the core beltline region.

10.3.3 Refueling Equipment (F15-E000)

10.3.3.1 Refueling Machine Equipment (F15-E003)

This is the equipment used to support the refueling machine, such as the mast, the pendant and various end effectors.

10.3.4 Fuel Storage Equipment (F16-E000)

High density fuel storage racks are used for storage of spent fuel. The racks are design to accommodate the shorter fuel for the ESBWR design.

10.3.5 Under Vessel Servicing Equipment (F17-E000)

10.3.5.1 FMCRD Handling Machine (F17-E01X)

The function of the Fine Motion Control Rod Drive (FMCRD) Handling Machine is to remove the motor and packing spool piece, and also remove the upper drive component. The equipment consists of the following devices:

1. <u>Under Vessel Rotating Platform (F17-E010)</u>

The rotating platform is a circular type mounted to a rail under the vessel. The platform is driven by an electric motor to perform horizontal rotation thereby to enable positioning the CRD handling device under various FMCRD's. There is an opening in the center provided with a traveling rail for the CRD handling device The rotating platform is also used for the Reactor Internal Pump (RIP) motor handling work. Gratings are installed on both sides of the rails to permit workers to access the working area for CRD handling or in-core detector handling work.

The positioning of the drive handling equipment to one of the drives is performed by a combination of rotational motion of the rotating platform and linear motion of the CRD handling device. During the removal or installation work, the position of each device is monitored by a

worker and controlled by the operator from either outside or inside the RPV pedestal room using a control device.

2. CRD Handling Device (F17-E011)

The CRD handling device consists of the traveling mechanism, the mast, the drive lifting mechanism, the tilting mechanism, and the CRD cart. This equipment in combination extracts and tilts the drives for removal from the pedestal area.

3. CRD Bolt Wrench Device (F17-E012)

The CRD bolting device is comprised of the bolting module, the draining mechanism and the turning mechanism. The positioning of this device is performed to align the center of the bolting module with the drive using the transfer mechanism of the CRD handling device. The positioning of the wrenches is performed by the manual turning mechanism. There are three attachments or end effectors which fit to the CRD bolting device depending upon which component is to be removed; the motor, the packing spool piece or the upper drive component.

4. CRD Bolt Wrench Device Carrier (F17-E013)

The bolt wrench device is placed on this carrier while the drive is removed from the CRD housing and rotated to the horizontal position. The carrier is then used to place the drive on the FMCRD cart for removal from the lower drywell area.

5. CRD Motor/Spool Piece Bolt End Effectors (F17-E014)

For removing either the motor, the motor bracket, the spool piece or the drive at the pressure boundary flange requires four different end effectors or bolt removal attachments depending upon which operation is to be performed.

6. Bolt Wrench Control Panel (F17-E015)

The control device consists of the control panel and the pendant control box. The major operations are performed by the control panel outside the RPV pedestal area. The pendant control box is located on the platform in the RPV pedestal area for final positioning and confirmation of clearance.

7. CRD Attachment Carrier (F17-E016)

The attachment carrier is mounted on a rail above the platform for use of various support attachments needed to assist the removal or installation of the CRD.

8. Motor/Spool Piece Cart (F17-E017)

This is the cart used to move the motor and/or spool piece from the lower drywell area to the maintenance area.

9. FMCRD Cart (F17-E018)

This is the cart used to transport the drive from the platform to the FMCRD maintenance area.

10. TV Camera and Monitor (F17-E019)

The cameras (3) are used to monitor the work inside the pedestal area.

11. Fixed Sealing Flange (F17-E020)

These are blank flanges used to seal the bottom of the FMCRD housings.

12. CRD Control Device (F17-E021)

This is the control panel outside of the pedestal or lower drywell area used to control the majority of operations.

10.3.5.2 In-core Monitor Assembly Handling Equipment (F17-E03X)

The in-core monitoring equipment consists of the following:

1. In-core Monitor Seat Flushing Device (F17-E030)

This device is used to flush the seal of the in-core monitor assembly during replacement and is used for leak testing following the replacement of the assembly.

2. In-core Monitor Nut Wrench (F17-E031)

This device is used for turning the retaining nut of the in-core monitor assembly when it is being removed or installed.

10.3.6 FMCRD Maintenance Facility Equipment

All of the equipment listed is used in the drive maintenance facility to decontaminate, disassemble, repair, rebuild, reassemble and test the Fine Motion Control Rod Drives.

10.3.7 Refueling and Servicing Outage

10.3.7.1 Equipment Preparation

An ingredient in a successful refueling outage is equipment and new fuel readiness. Equipment long lying dormant must be brought to life. All tools, grapples, slings, strongbacks, stud tensioners, etc., should be given a thorough inspection and operational check and any defective (or well worn) parts should be replaced. Air hoses on grapples should be checked. Crane cables should be routinely inspected. All necessary maintenance should be performed to preclude outage extension due to equipment failure.

10.3.7.2 Reactor Shutdown

The reactor is shut down according to the prescribed plant operating procedures. During cooldown, the reactor pressure vessel is vented and filled to above flange level to promote cooling. The reactor vessel cavity is deflooded during this time in preparation for the drywell head and vessel head removal.

10.3.7.3 Drywell Head Removal

Immediately after cooldown and deflooding, the work to unfasten the drywell head can begin. The drywell head is attached by quick-connect latches. All latches are loosened in one operation. The unbolted drywell head is lifted by the overhead building crane utilizing the RPV strongback, to its appointed storage space on the refueling floor. The drywell seal surface protector is installed before any other activity proceeds in the reactor well area.

The RPV head insulation is attached to the bottom of the drywell head and is removed with the drywell head. This design eliminates an extra step to remove the insulation.

10.3.7.4 Reactor Vessel Opening

10.3.7.4.1 Vessel Head Removal

The combination head strongback, carousel, stud tensioner and stud runner is transported by the containment building crane and positioned on the reactor vessel head.

Each stud is tensioned and its nut loosened in a series of 2 to 3 passes. Finally, when the nuts are loose, the studs are removed from the lower flange using the stud runner. The studs are then supported in the head flange with the nuts and added spacers. When all the studs, nuts and washers are removed, the vessel stud hole protectors and vessel head guide caps are installed.

Next, the head, strongback, and carousel are transported by the containment building crane to the head holding pedestals on the refueling floor. The head holding pedestals keep the vessel head elevated to facilitate inspection and "0" ring replacement.

The reactor vessel level and the reactor cavity is now filled with clean water in preparation for the dryer and separator transfer. The gates to the separator-dryer storage pool are removed.

10.3.7.4.2 Dryer Removal

The dryer-separator strongback is lowered by the containment building crane and attached to the dryer lifting lugs. The dryer is lifted from the reactor vessel and transported to its storage location in the dryer storage pool adjacent to the reactor well. The dryer is not expected to be highly radioactive but is still transferred underwater.

10.3.7.4.3 Separator Removal

In preparation for the separator removal, the separator assembly and chimney head are unlatched from the chimney using a wrench furnished for this purpose. When the unlatching is

accomplished, the dryer-separator strongback is lowered into the vessel and attached to the separator lifting lugs. The separator assembly is transferred to its allotted storage place in the pool.

10.3.7.5 Fuel Bundle Sampling

During reactor operation, the core offgas radiation level is monitored. If a rise in offgas system activity is detected a flux tilting method may be used to locate the potentially failed fuel. In addition, the reactor core may be sampled during shutdown to locate any leaking fuel assemblies if necessary. The fuel sampler isolates up to a 16 bundle array in the core. This stops water circulation through the bundles and allows fission products to concentrate if a bundle is defective. After 10 minutes, a water sample is taken for fission product analysis. If a defective bundle is found, it is transferred to the fuel building storage pool and stored in a special defective fuel storage container to minimize background activity in the storage pool.

10.3.7.6 Refueling and Reactor Servicing

The gate isolating the spent fuel storage pool from the reactor well (or cavity) is removed, thereby interconnecting the two pools. The refueling of the reactor can now begin.

10.3.7.6.1 Refueling

During a twenty-four month equilibrium outage, approximately 35% of the fuel is removed from the reactor vessel, 65% of the fuel is shuffled in the core (generally from peripheral to center locations), and 35% new fuel is installed. The actual fuel handling is done with the refueling machine. It is used as the principal means of transporting fuel assemblies between the reactor well and the containment pool; it also serves as a hoist and transport device. It provides an operator with work surface for almost all the other servicing operations. The platform travels on track extending along each side of the reactor well and pool and supports the refueling mast and pendent. Platform movement is controlled from an operator control room overlooking the refueling machine and the refueling floor.

The refueling machine has two 1/2 ton auxiliary hoist. One auxiliary hoist is mounted on the reactor side of the refueling machine and projects approximately 2 feet from the frame. This hoist can be used with appropriate grapples to handle control rods, guide tubes, fuel support pieces, sources, and other internals of the core. The refueling machine pendants with the correct end effectors are the primary source of servicing the control rods, incore instruments, and incore sources but the auxiliary hoists provide backup. The auxiliary hoist can also serve as a means of handling other equipment within the pool. The second auxiliary hoist is mounted on the other side of the refueling machine.

A single operator, from the control room can control all the motions of the refueling machine required to handle the fuel assemblies during refueling. Interlocks on the fuel end effector and the mast prevent hoisting of a fuel assembly over the core with a control rod withdrawn; interlocks also prevent withdrawal of a blade with a fuel assembly over the core attached to the fuel grapple. Interlocks block travel over the reactor in the startup mode.

The refueling machine contains a system that indicates position of the both fuel grapples over the core. The readout, in the refueling control room, matches the core arrangement cell identification numbers. The position indicator is accurate within 6 mm (1/4 inch), relative to actual core position.

To move fuel, the fuel grapples are aligned over their respective fuel assemblies, lowered, and attached to the fuel bundle bail. The fuel bundles are raised out of the core, moved through the refueling slot to the storage pool, positioned over the storage rack, and lowered into the rack. Fuel is shuffled and new fuel is moved from the pool to the reactor vessel in the reverse manner. Refer to Section 4.13.1 for more details regarding the refueling machine design and operation.

10.3.7.7 Vessel Closure

The following steps, when performed, will return the reactor to operating condition. The procedures are the reverse of those described in the preceding sections. Many steps are performed in parallel and not as listed.

Install pool gate.

Core verification. The core position of each fuel assembly must be verified to assure the desired core configuration has been attained. Underwater TV with a videotape record is utilized.

Control rod drive tests. The control rod drive scram tests are performed as required.

Replace separator.

Latch separator, and remove the four steamline plugs.

Replace steam dryer.

Drain reactor cavity

Remove drywell seal surface covering.

Replace vessel studs.

Install reactor vessel head.

Hydro-test vessel, if required.

Install drywell head. Leak check.

Flood reactor well.

Startup tests. The reactor is returned to full power operation. Power is increased gradually in a series of steps until the reactor is operating at rated power. At specific steps during the approach to power, the incore flux monitors are calibrated.

Appendix A
System Schematic Diagrams

Chapter 3.1 Nuclear Boiler System
Chapter 3.2 Control Rod Drive System
Chapter 3.3 Isolation Condenser System
Chapter 3.4 Standby Liquid Control System
Chapter 3.5 Reactor Water Cleanup/Shutdown Cooling System
Chapter 3.6 Fuel and Auxiliary Pools Cooling System
Chapter 3.7 Reactor Component Cooling Water System
Chapter 3.8 Plant Service Water System
Chapter 4.1 Gravity Driven Cooling System
Chapter 4.2 Passive Containment Cooling System
Chapter 5.1 Containment System
Chapter 5.3 Drywell Cooling System
Chapter 5.4 Containment Atmospheric Control system
Chapter 8.1 Offgas System
Chapter 8.2 Fire Protection System
Chapter 9.1 Proposed (Simplified) Heat Cycle
Chapter 9.2 Condensate/Feedwater System
Chapter 9.2 Cooling Water Systems

Chapter 3.1
ESBWR Nuclear Boiler System - Schematic Diagram

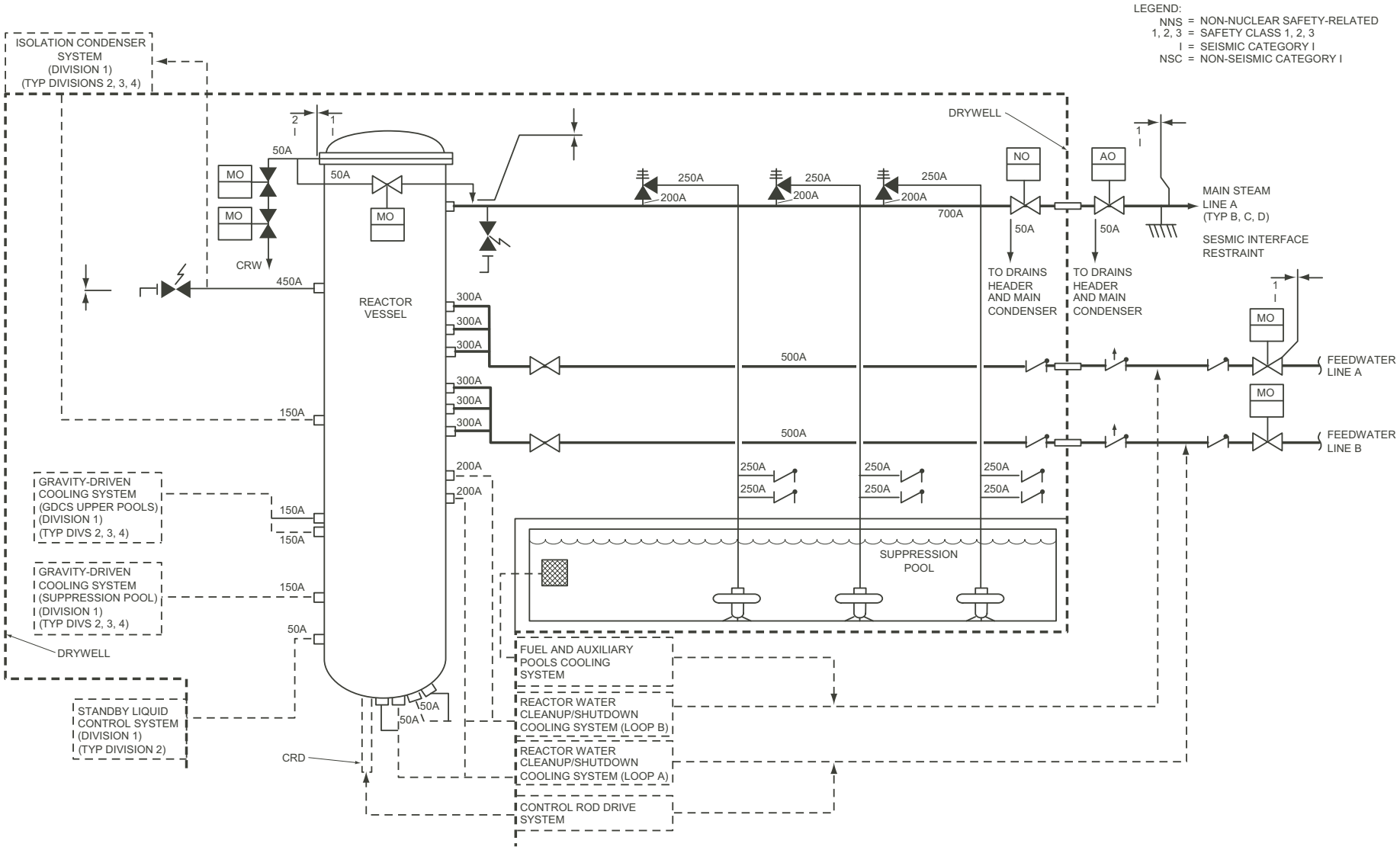

Chapter 3.2
ESBWR Control Rod Drive System - Schematic Diagram

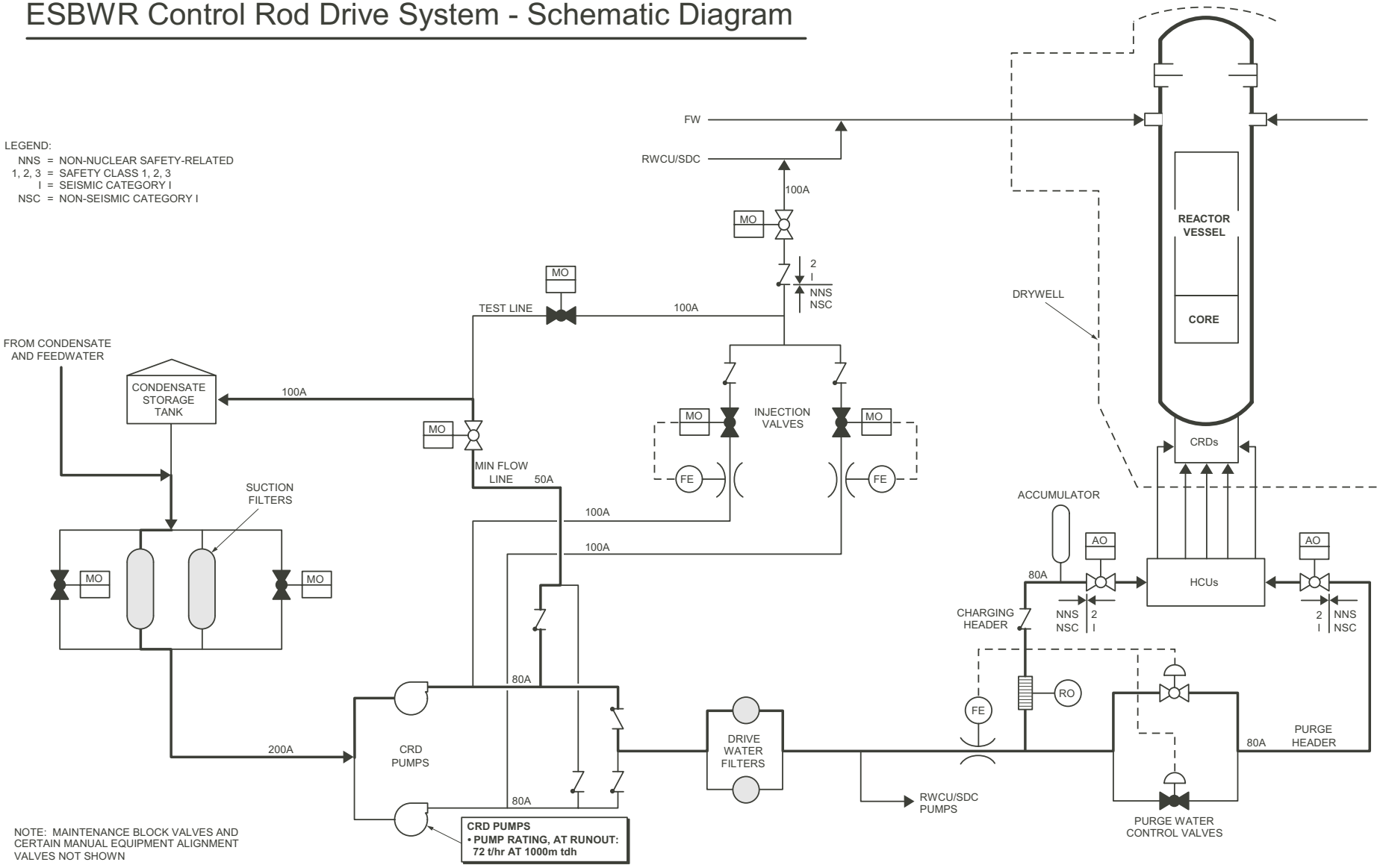

Chapter 3.3
ESBWR Isolation Condenser System - Schematic Diagram

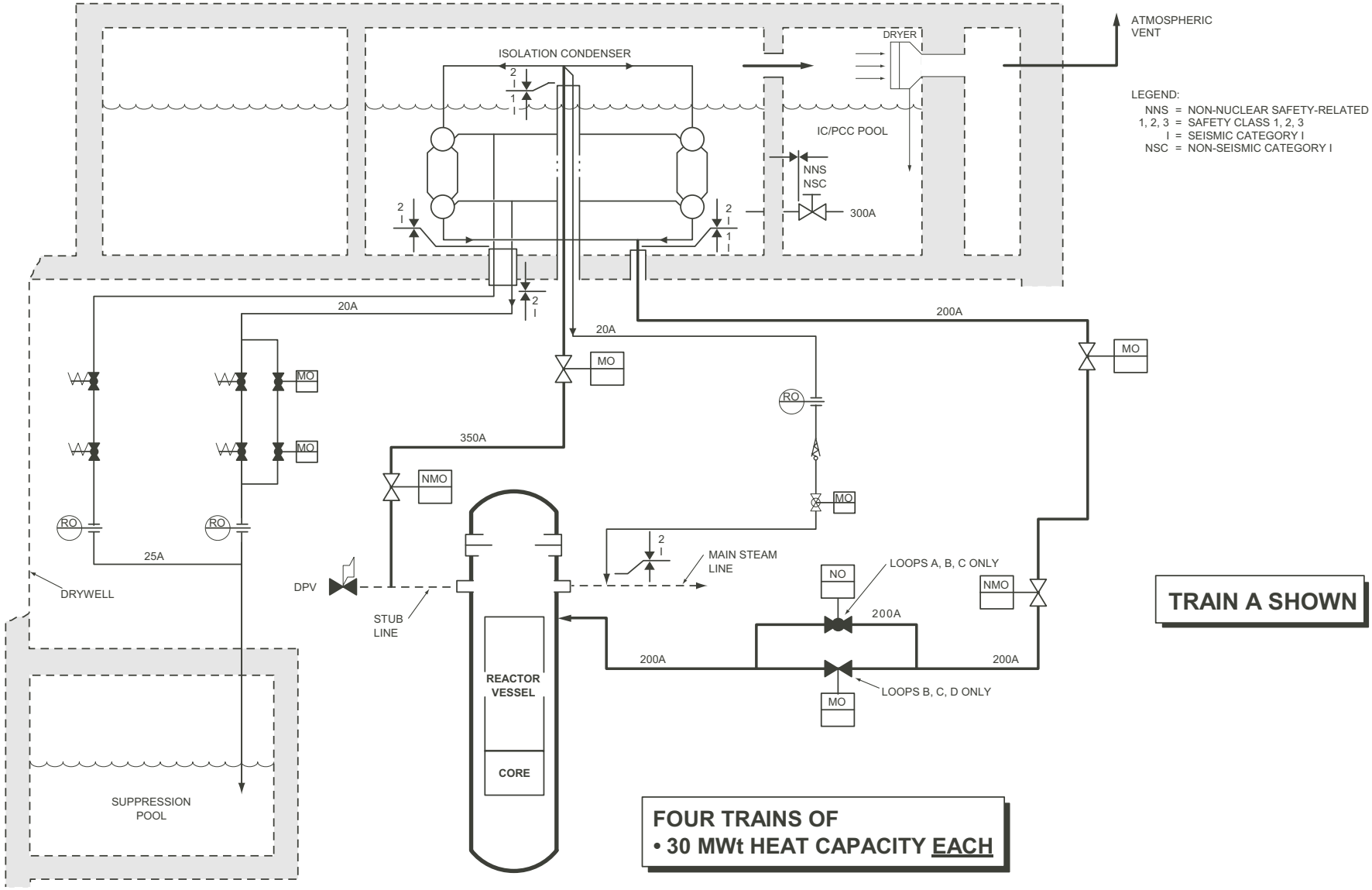

Chapter 3.4
ESBWR Standby Liquid Control System - Schematic Diagram

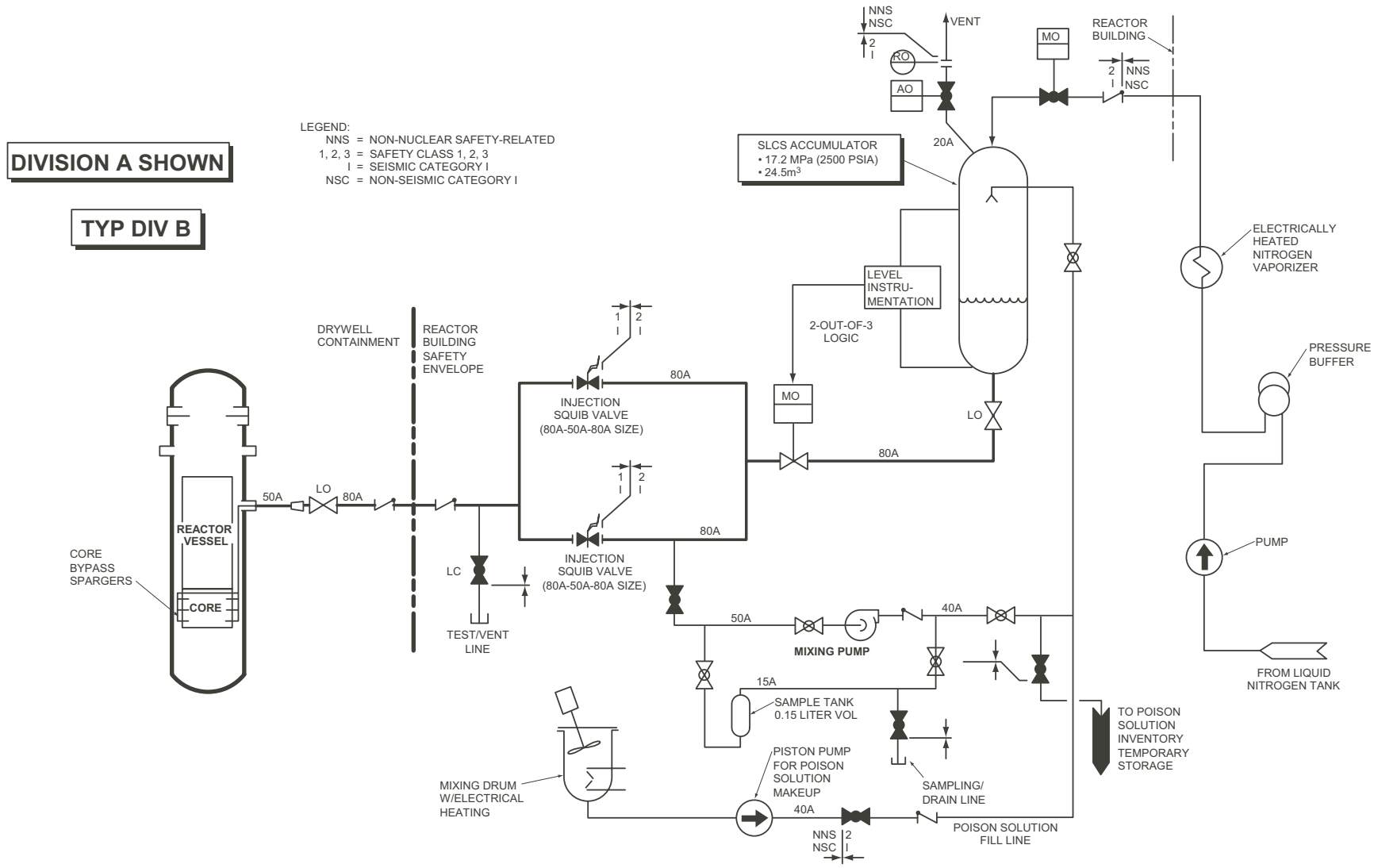

Chapter 3.5
ESBWR Reactor Water Cleanup/Shutdown Cooling System - Schematic Diagram

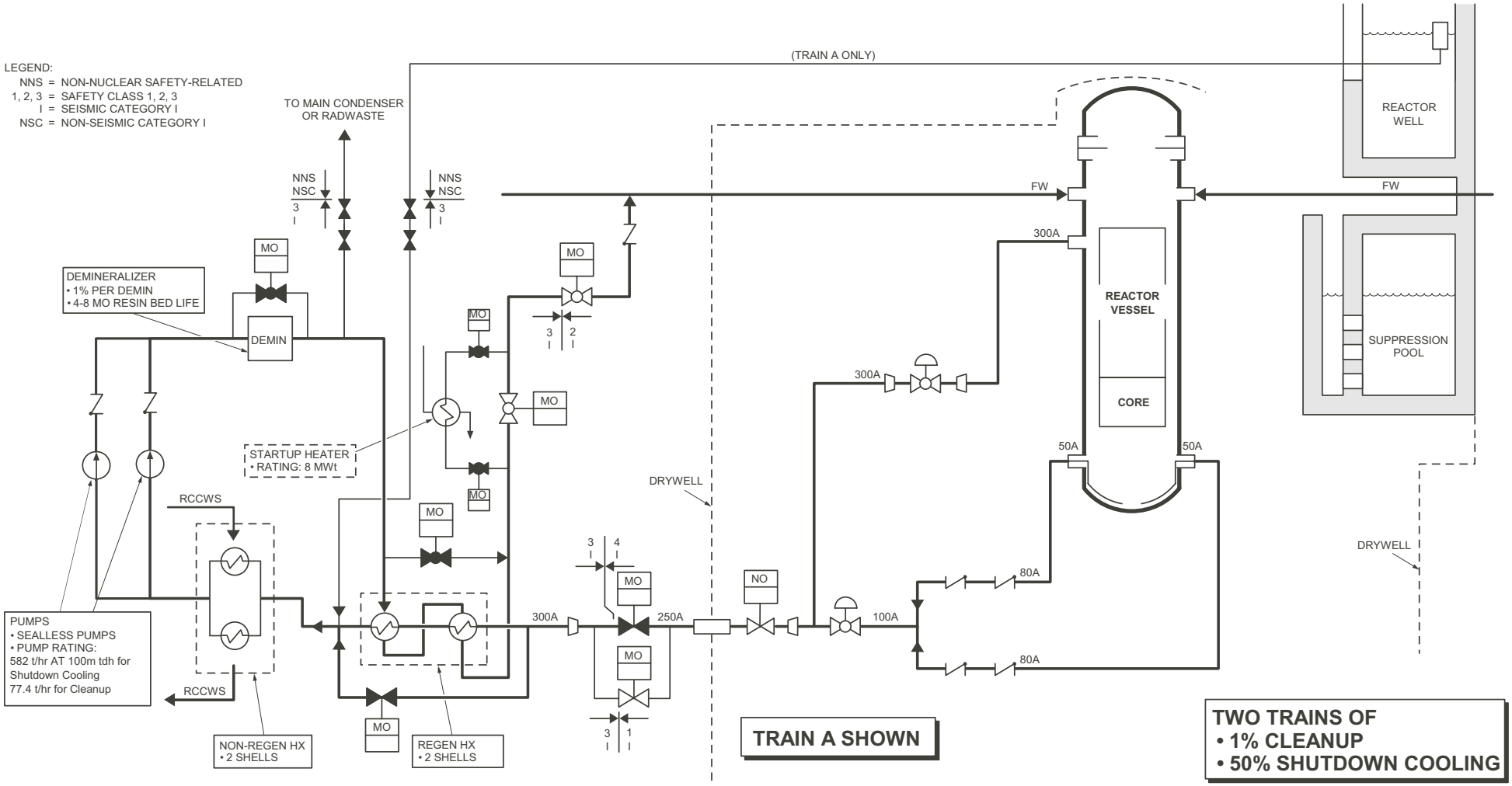

ESBWR Fuel and Auxiliary Pools Cooling System - Schematic Diagram

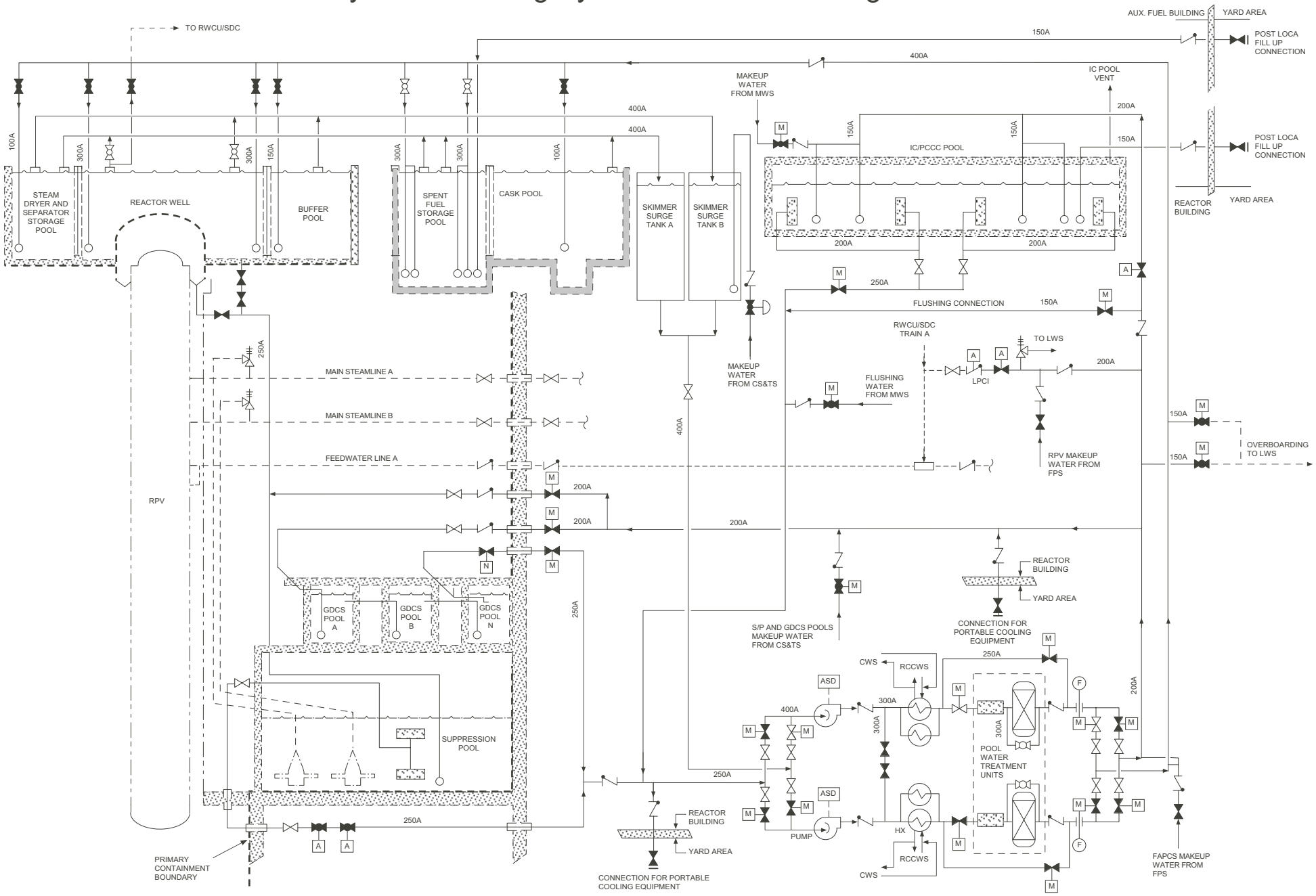

Chapter 3.7
ESBWR Reactor Component Cooling Water System - Schematic Diagram

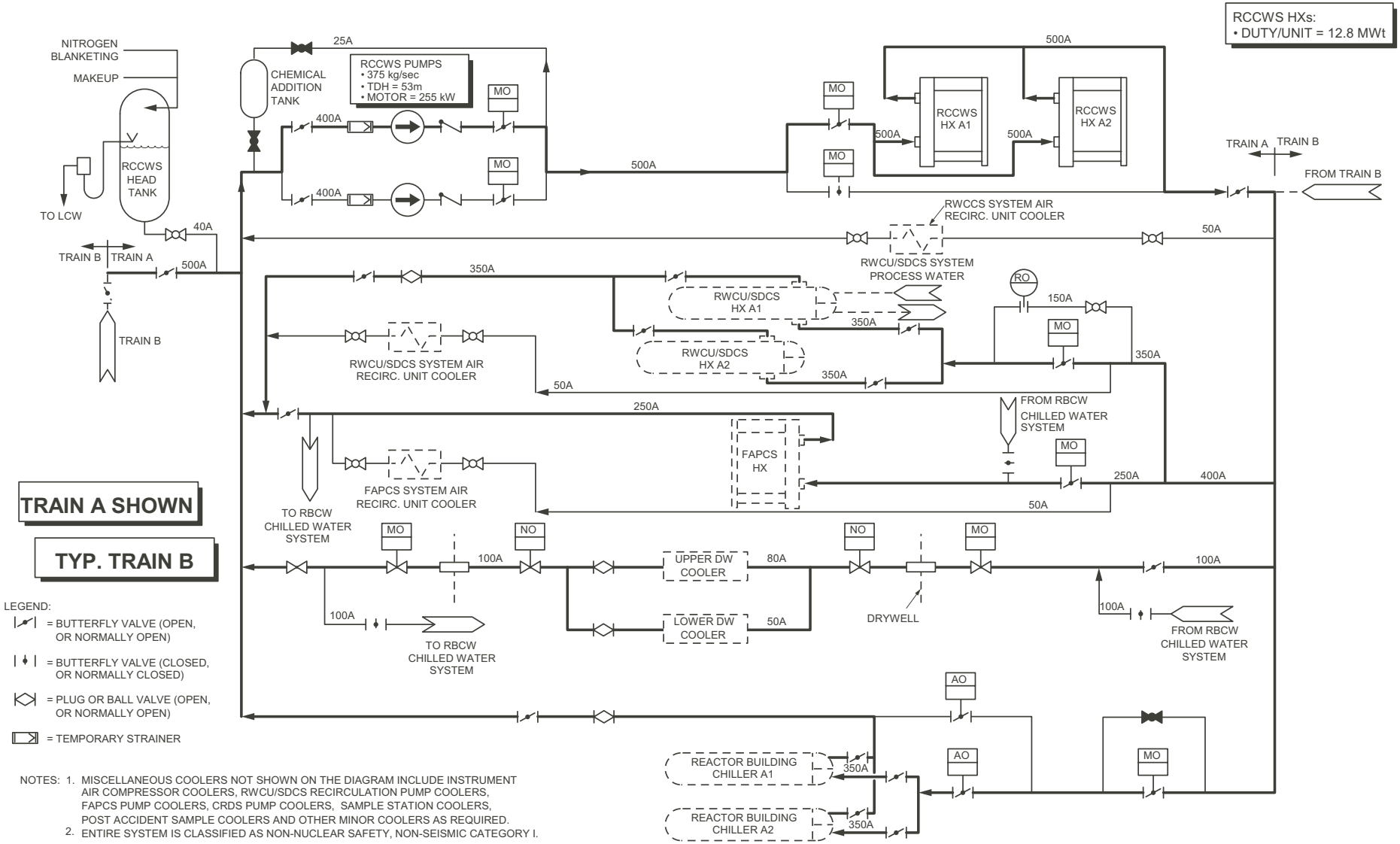

NOTES: 1. MISCELLANEOUS COOLERS NOT SHOWN ON THE DIAGRAM INCLUDE INSTRUMENT AIR COMPRESSOR COOLERS, RWCU/SDCS RECIRCULATION PUMP COOLERS, FAPCS PUMP COOLERS, CRDS PUMP COOLERS, SAMPLE STATION COOLERS, POST ACCIDENT SAMPLE COOLERS AND OTHER MINOR COOLERS AS REQUIRED.
2. ENTIRE SYSTEM IS CLASSIFIED AS NON-NUCLEAR SAFETY, NON-SEISMIC CATEGORY I.

Chapter 3.8
ESBWR Plant Service Water System - Schematic Diagram

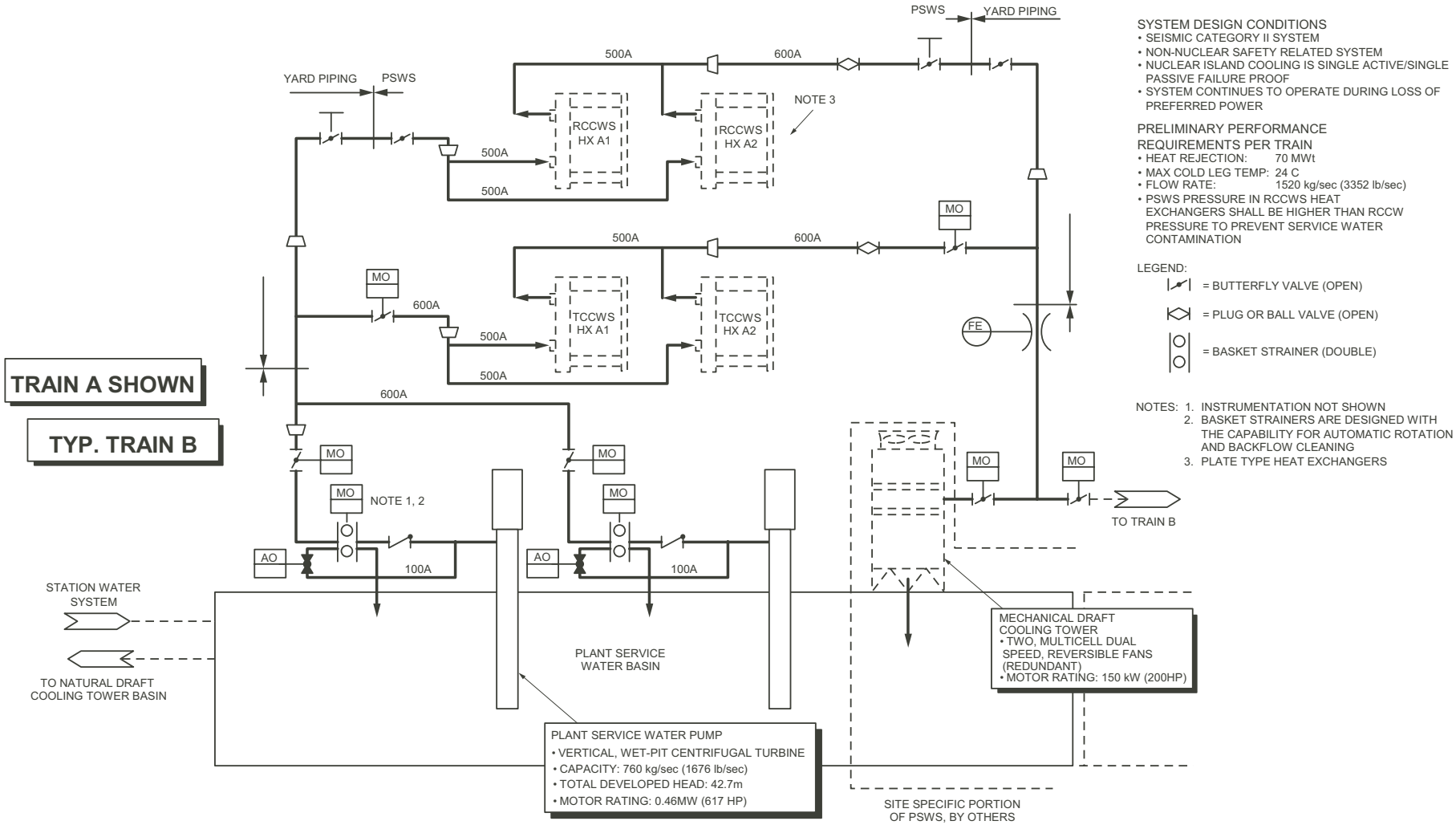

SYSTEM DESIGN CONDITIONS
- SEISMIC CATEGORY II SYSTEM
- NON-NUCLEAR SAFETY RELATED SYSTEM
- NUCLEAR ISLAND COOLING IS SINGLE ACTIVE/SINGLE PASSIVE FAILURE PROOF
- SYSTEM CONTINUES TO OPERATE DURING LOSS OF PREFERRED POWER

PRELIMINARY PERFORMANCE REQUIREMENTS PER TRAIN
- HEAT REJECTION: 70 MWt
- MAX COLD LEG TEMP: 24 C
- FLOW RATE: 1520 kg/sec (3352 lb/sec)
- PSWS PRESSURE IN RCCWS HEAT EXCHANGERS SHALL BE HIGHER THAN RCCW PRESSURE TO PREVENT SERVICE WATER CONTAMINATION

LEGEND:
- = BUTTERFLY VALVE (OPEN)
- = PLUG OR BALL VALVE (OPEN)
- = BASKET STRAINER (DOUBLE)

NOTES:
1. INSTRUMENTATION NOT SHOWN
2. BASKET STRAINERS ARE DESIGNED WITH THE CAPABILITY FOR AUTOMATIC ROTATION AND BACKFLOW CLEANING
3. PLATE TYPE HEAT EXCHANGERS

Chapter 4.1
ESBWR Gravity-Driven Cooling System - Schematic Diagram

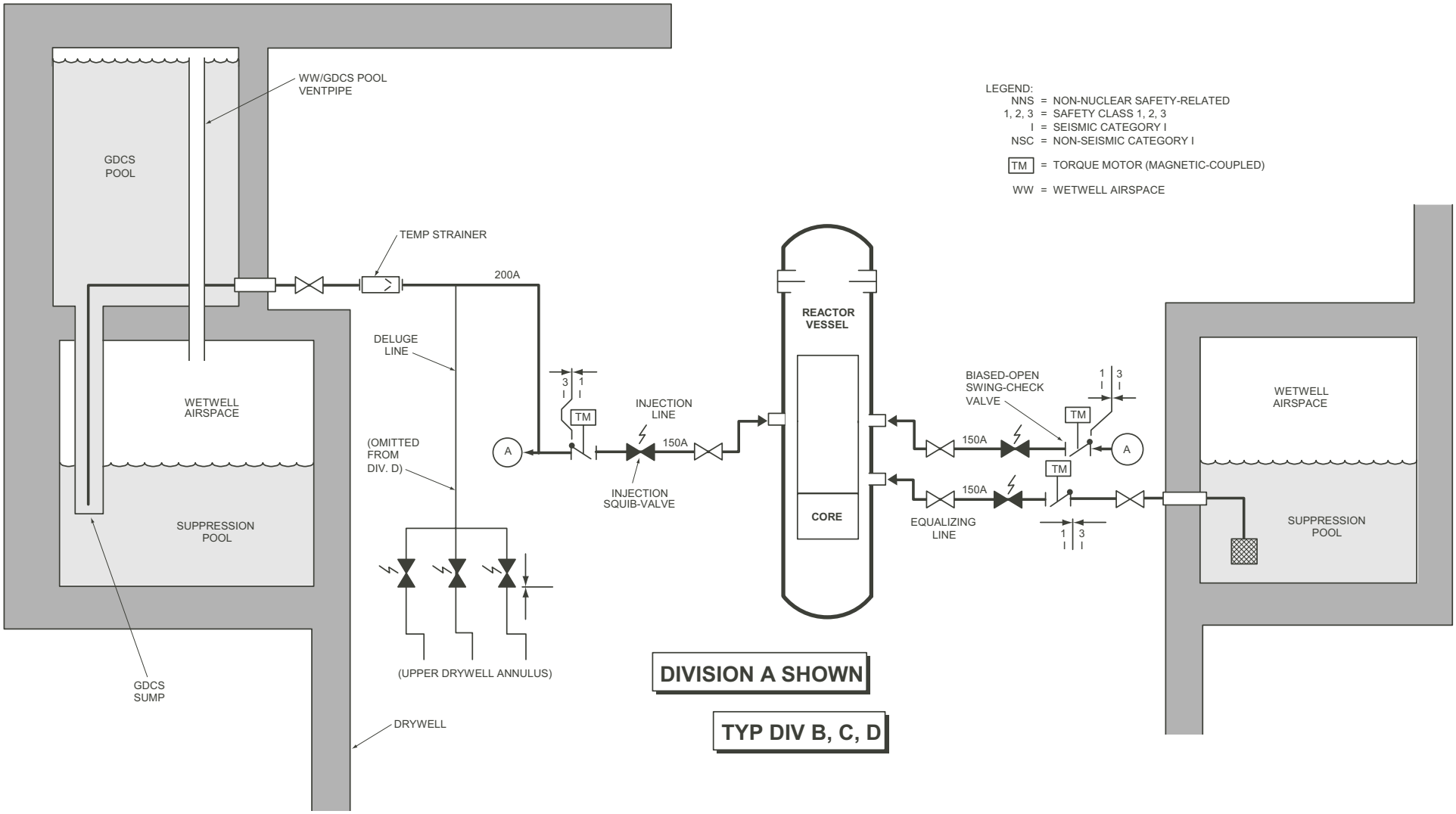

Chapter 4.2
ESBWR Enhanced Passive Containment Cooling System - Schematic Diagram

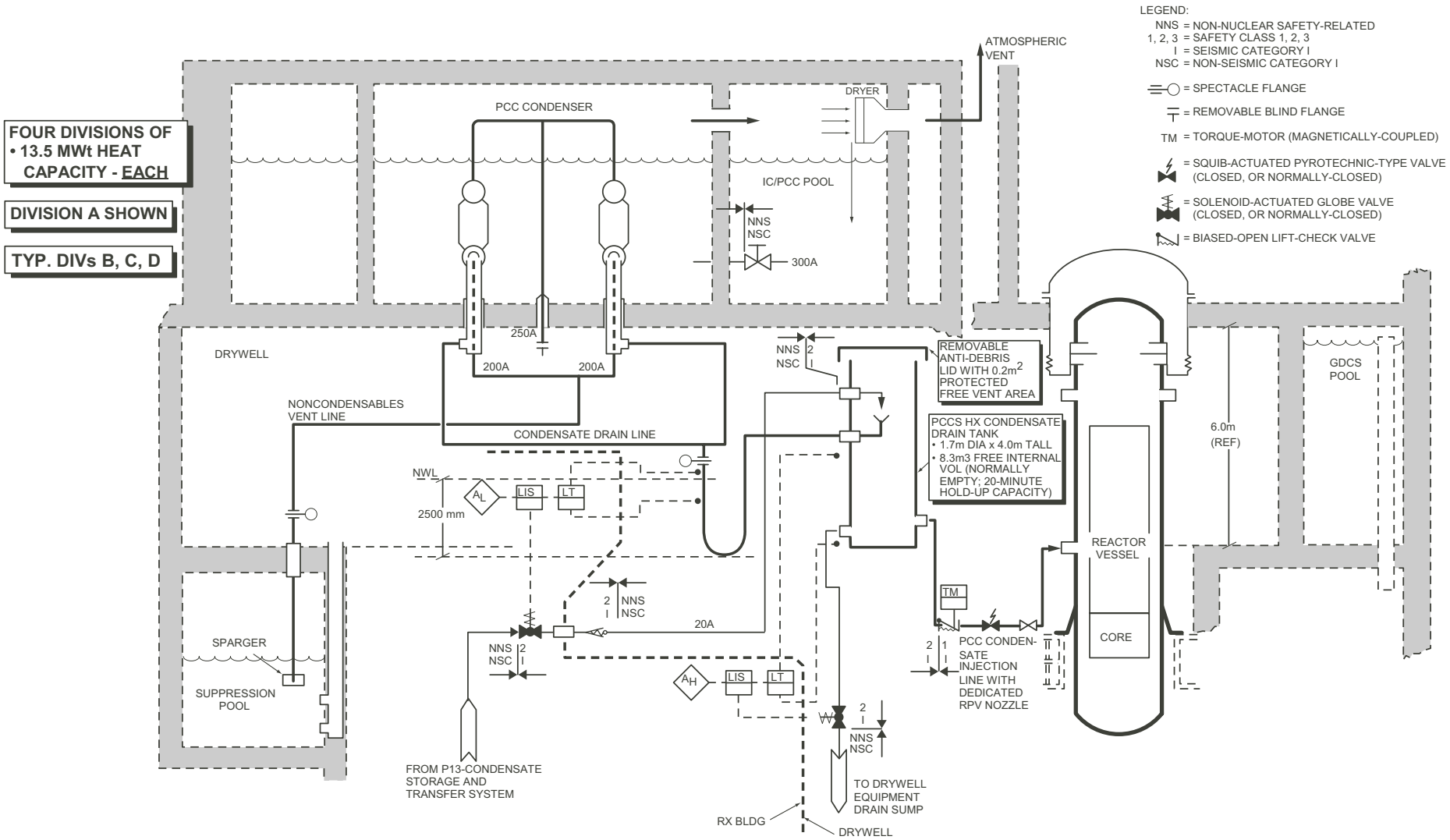

Chapter 5.1
ESBWR Containment System - Schematic Diagram

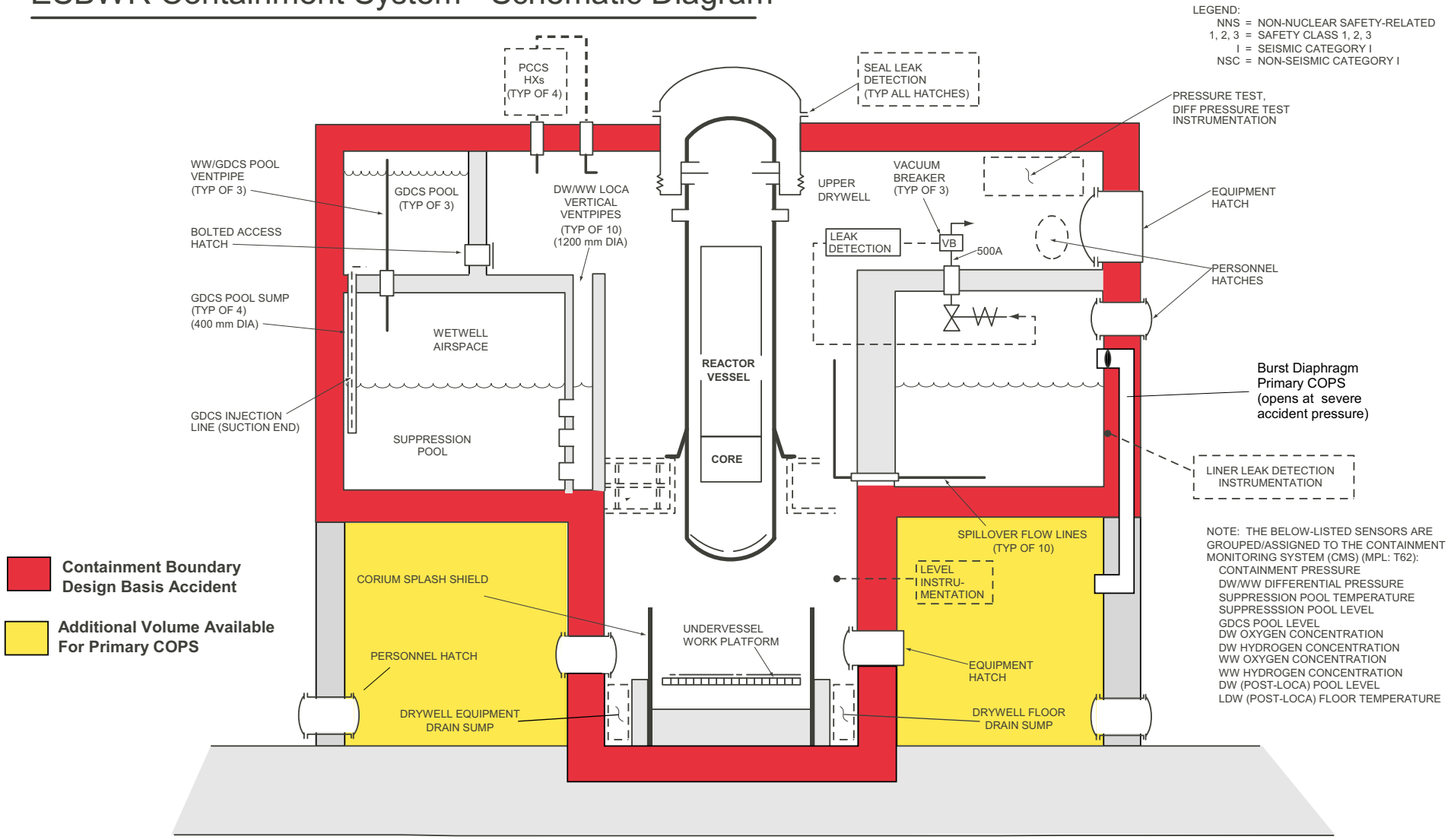

Chapter 5.3
ESBWR Drywell Cooling System - Schematic Diagram

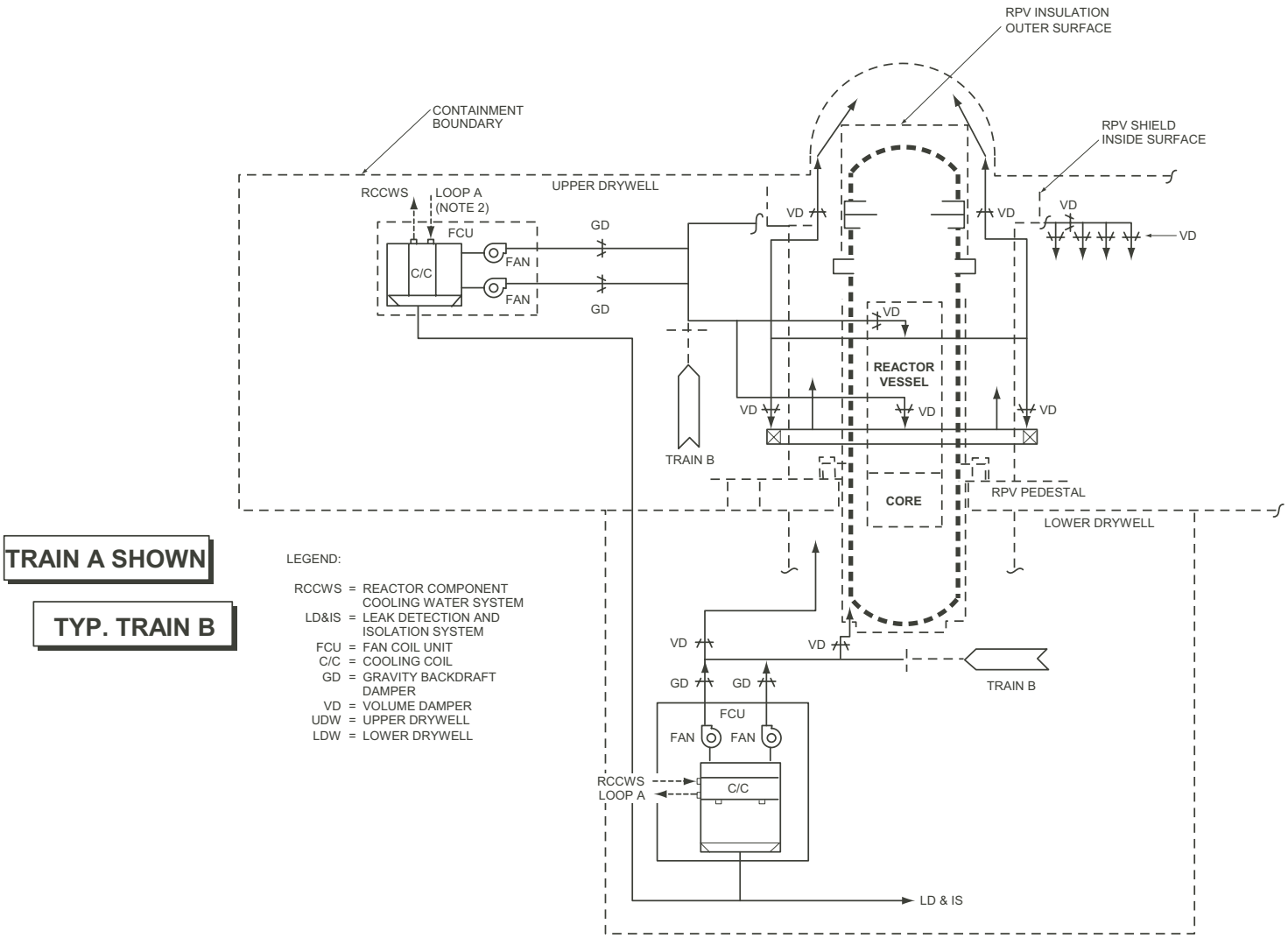

SYSTEM DESIGN CONDITIONS:
SEISMIC CATEGORY II
NON-NUCLEAR SAFETY-RELATED

PERFORMANCE REQUIREMENTS:
- NORMAL OPERATIONS:
  AVE DRYBULB TEMPERATURE = 57C (135F)
  MAXIMUM TEMPERATURE = 66C (150F)
  RELATIVE HUMIDITY = 50% NOMINAL
- PLANT SHUTDOWN:
  AVE DRYBULB TEMPERATURE = 26C (77F)
  RELATIVE HUMIDITY = 50% AVERAGE
- ESTIMATE OF DESIGN BASIS HEAT LOADS:

NORMAL OPERATION

	UDW (Kcal/hr)	LDW (Kcal/hr)
SENSIBLE LOAD	7.77×10^5	1.93×10^5
LATENT LOAD	3.78×10^5	1.68×10^4

REFUELING OPERATION

SENSIBLE LOAD	3.06×10^5	9.18×10^4
LATENT LOAD	1.82×10^4	NEGLIGIBLE

NOTES: 1) INSTRUMENTATION NOT SHOWN

2) DURING NORMAL OPERATION ONE FAN IN EACH FCU OPERATES, THE SECOND IS KEPT IN STANDBY. DURING MAINTENANCE AND REFUELING, BOTH FANS IN ONE FCU OPERATE. THE SECOND FCU IN THE UDW OR LDW IS SUBJECT TO MAINTENANCE. COOLING WATER SUPPLIED BY CHILLED WATER SYSTEM.

Chapter 5.4
ESBWR Containment Atmospheric Control System - Schematic Diagram

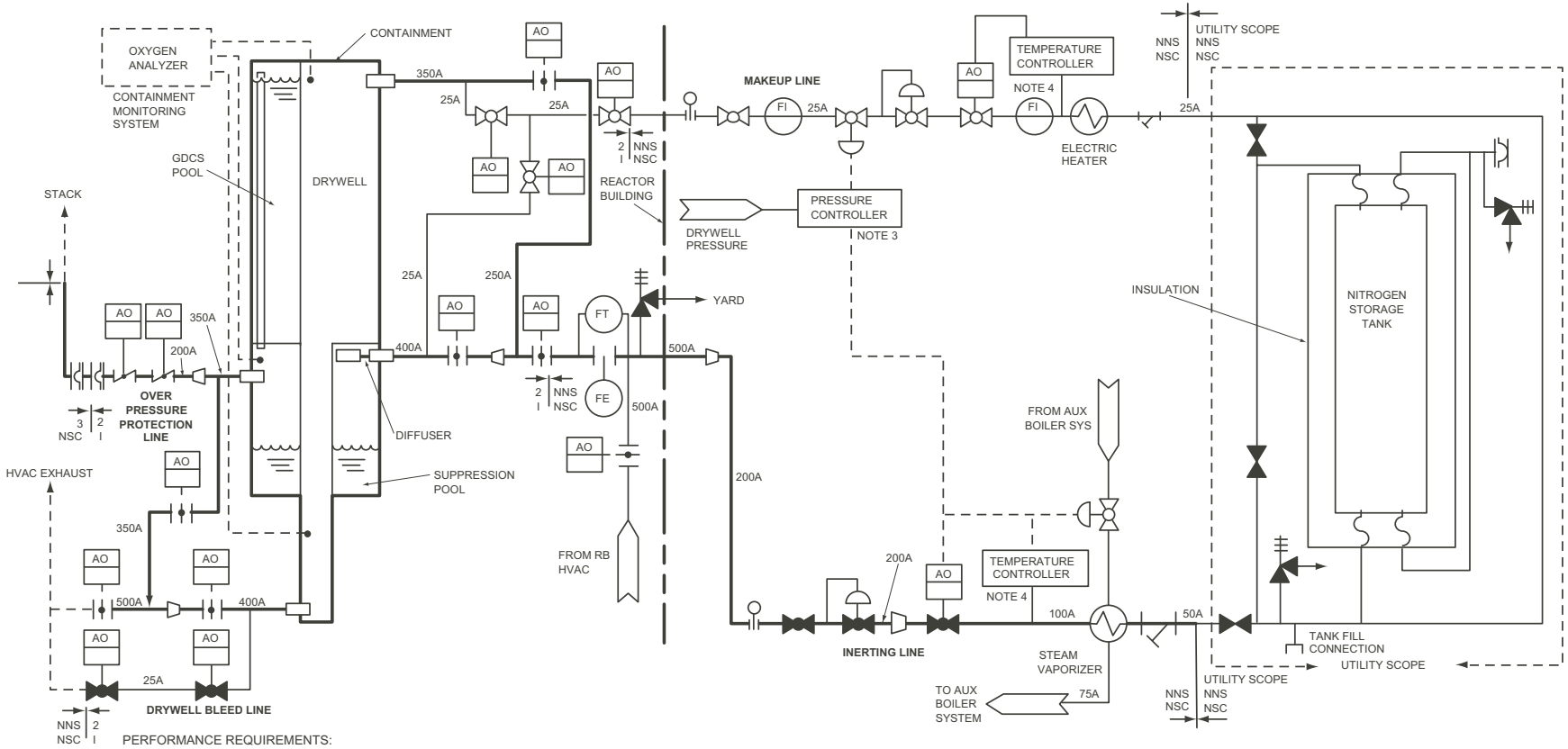

PERFORMANCE REQUIREMENTS:

- CONTAINMENT INERTING: REDUCE WW AND DW O_2 CONCENTRATIONS FROM ATM TO < 3.5 VOL% IN < 4 HRS
- CONTAINMENT DE-INERTING: BRING CONTAINMENT O2 CONCENTRATION ABOVE 19.5 VOL% WITHIN 4 HRS
- CONTAINMENT VENTILATION: PROVIDE FLOW PATH FOR VENTILATION AIR SUPPLY TO CONTAINMENT DURING OUTAGES OF APPROXIMATELY 2 VOL CHANGES/HR
- N2 MAKEUP: MAINTAIN 4.8 kPa POSITIVE PRESSURE IN CONTAINMENT RELATIVE TO SURROUNDINGS ASSUMING A CONTAINMENT OUT LEAKAGE OF 0.4%/DAY

  MAINTAIN N_2 INJECTION TEMPERATURE BETWEEN 10C (50F) AND 65.5C (150F)

NOTES:
1) CERTAIN MANUAL TEST AND ALIGNMENT VALVES NOT SHOWN
2) INSTRUMENTATION NOT SHOWN
3) IF DRYWELL PRESSURE EXCEEDS A GIVEN SETPOINT, MAKEUP AND INERTING VALVES ARE AUTOMATICALLY CLOSED
4) LOW N_2 TEMPERATURE ISOLATES LINE

LEGEND:
NNS = NON-NUCLEAR SAFETY-RELATED
1, 2, 3 = SAFETY CLASS 1, 2, 3
I = SEISMIC CATEGORY I
NSC = NON-SEISMIC CATEGORY I
= RUPTURE DISC
= BUTTERFLY VALVE CLOSED
= BUTTERFLY VALVE OPEN
= SPECTACLE FLANGE
= "Y" TYPE STRAINER

[[Chapter 8.1
ESBWR Offgas System - Schematic Diagram

{3}]]

Chapter 8.2
ESBWR Fire Protection System - Schematic Diagram

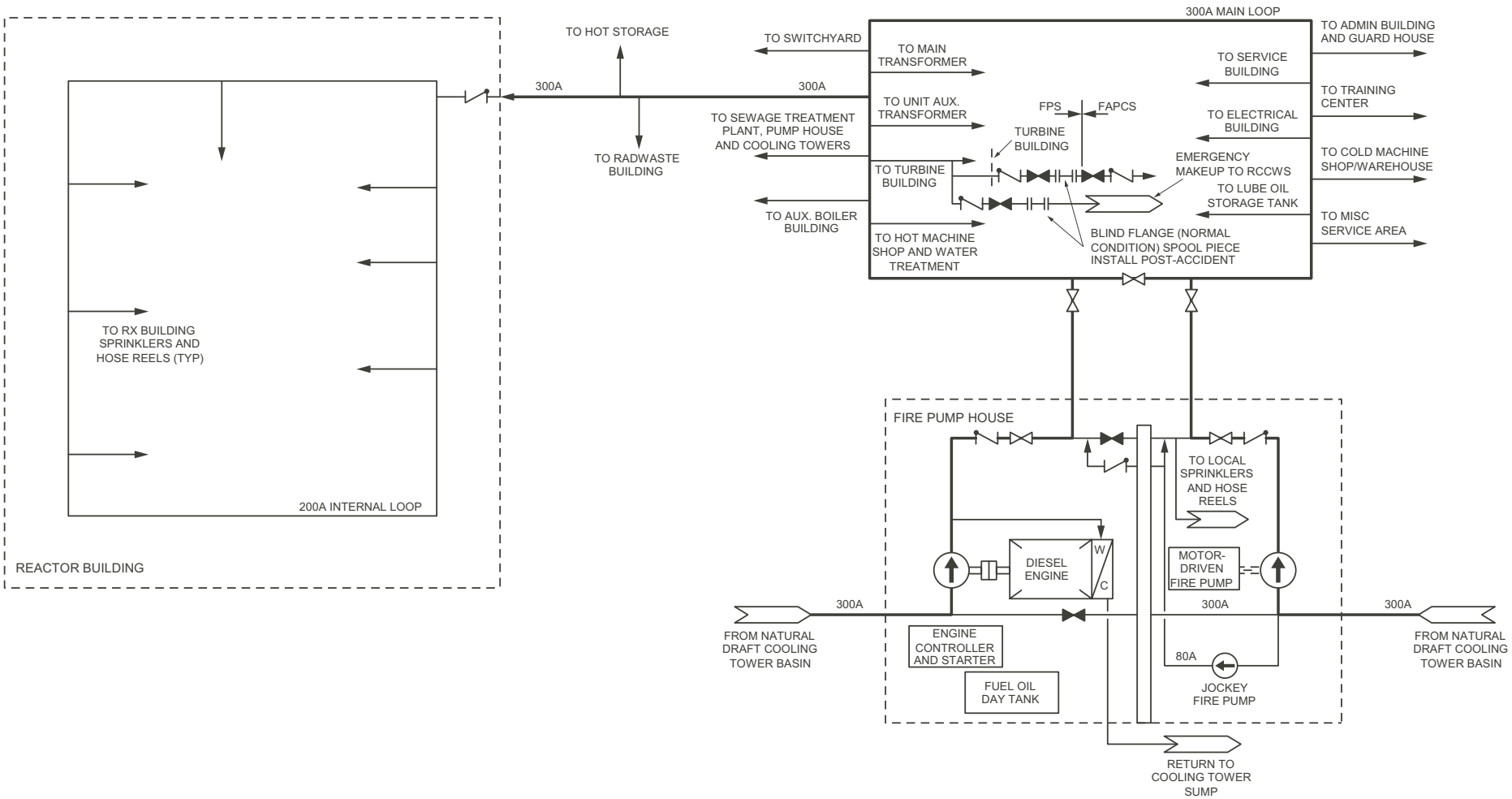

Chapter 9.1
ESBWR Proposed (Simplified) Heat Cycle - Schematic Diagram

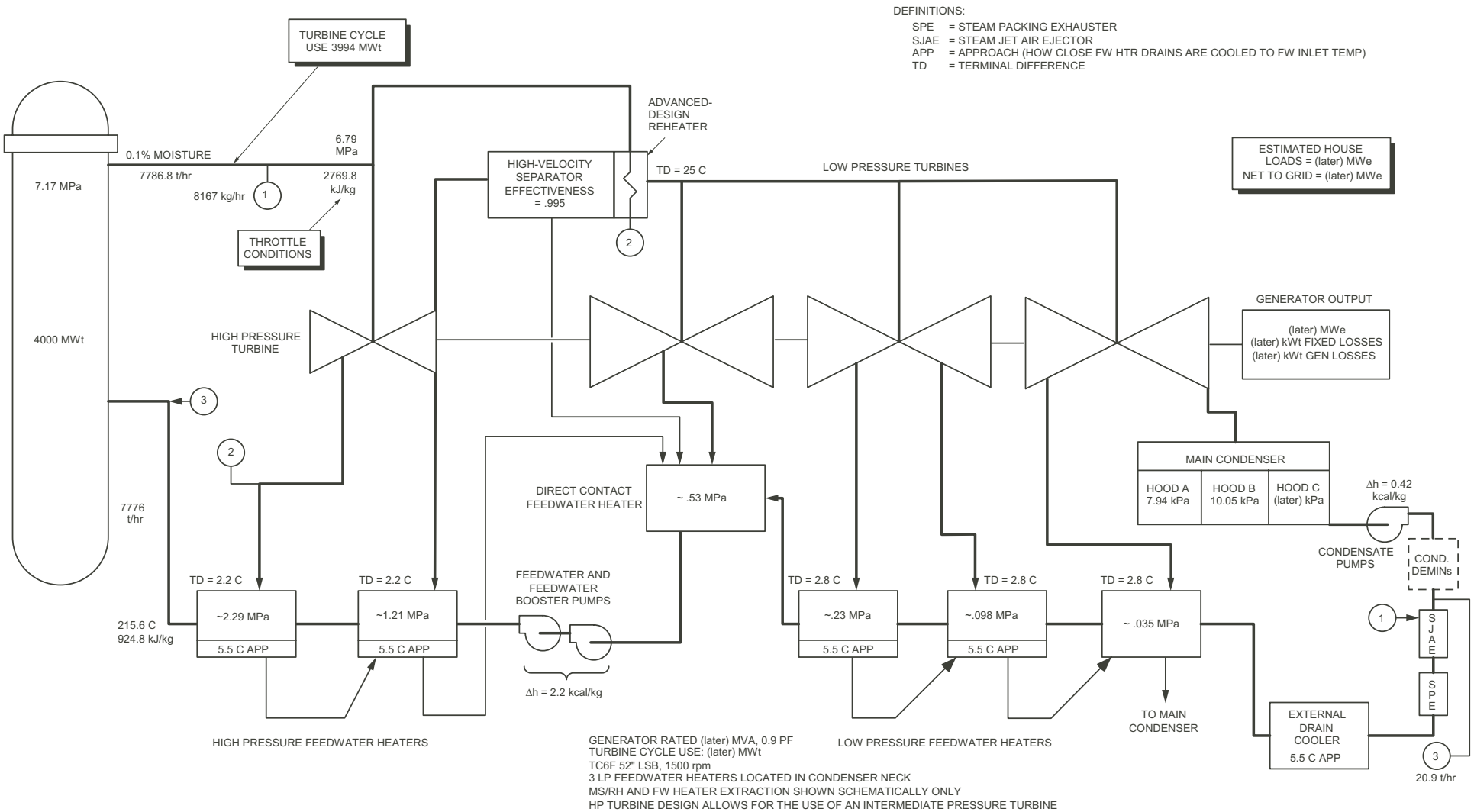

Chapter 9.2
ESBWR Condensate/Feedwater System - Schematic Diagram

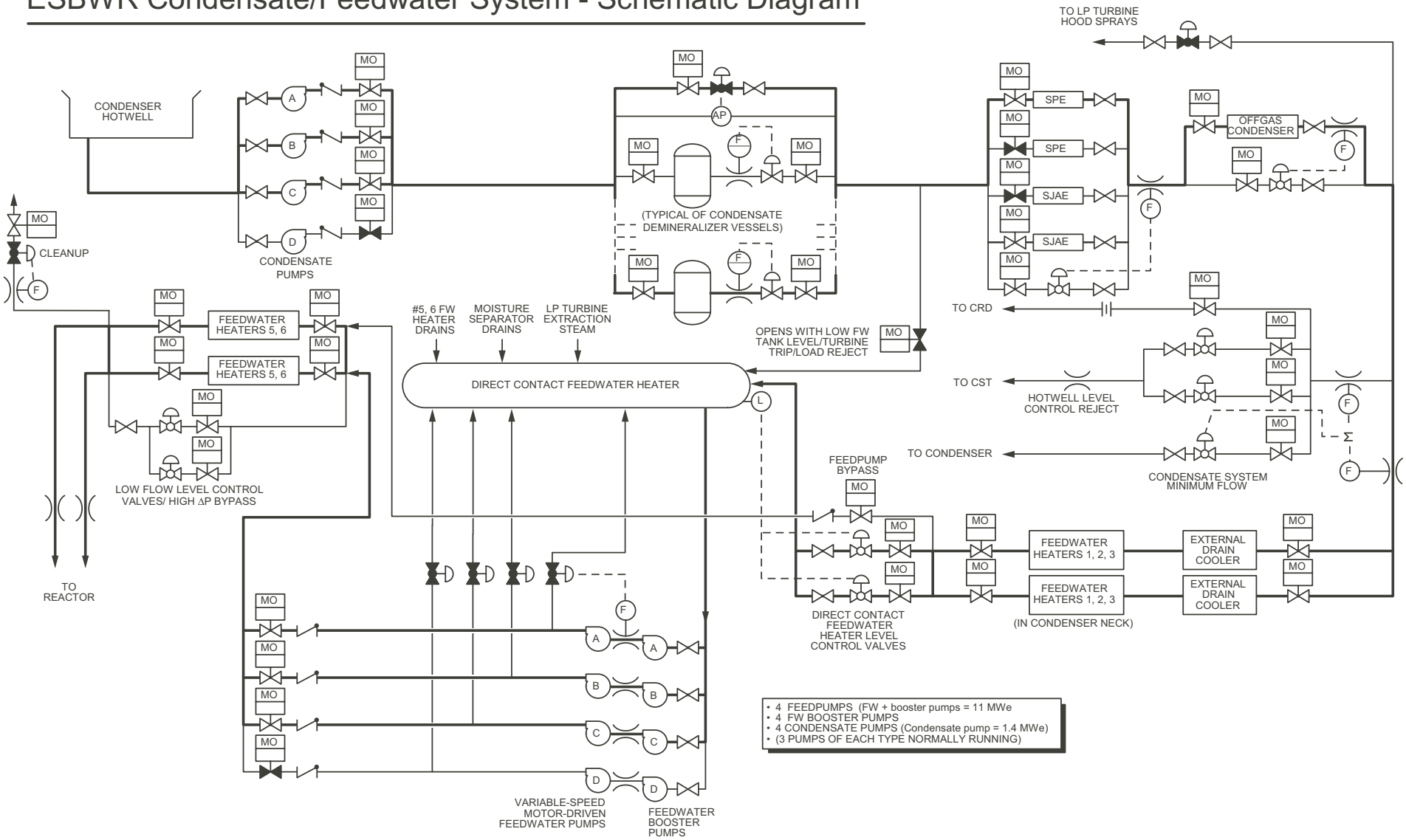

Chapter 9.2
ESBWR Cooling Water Systems - Schematic Diagram

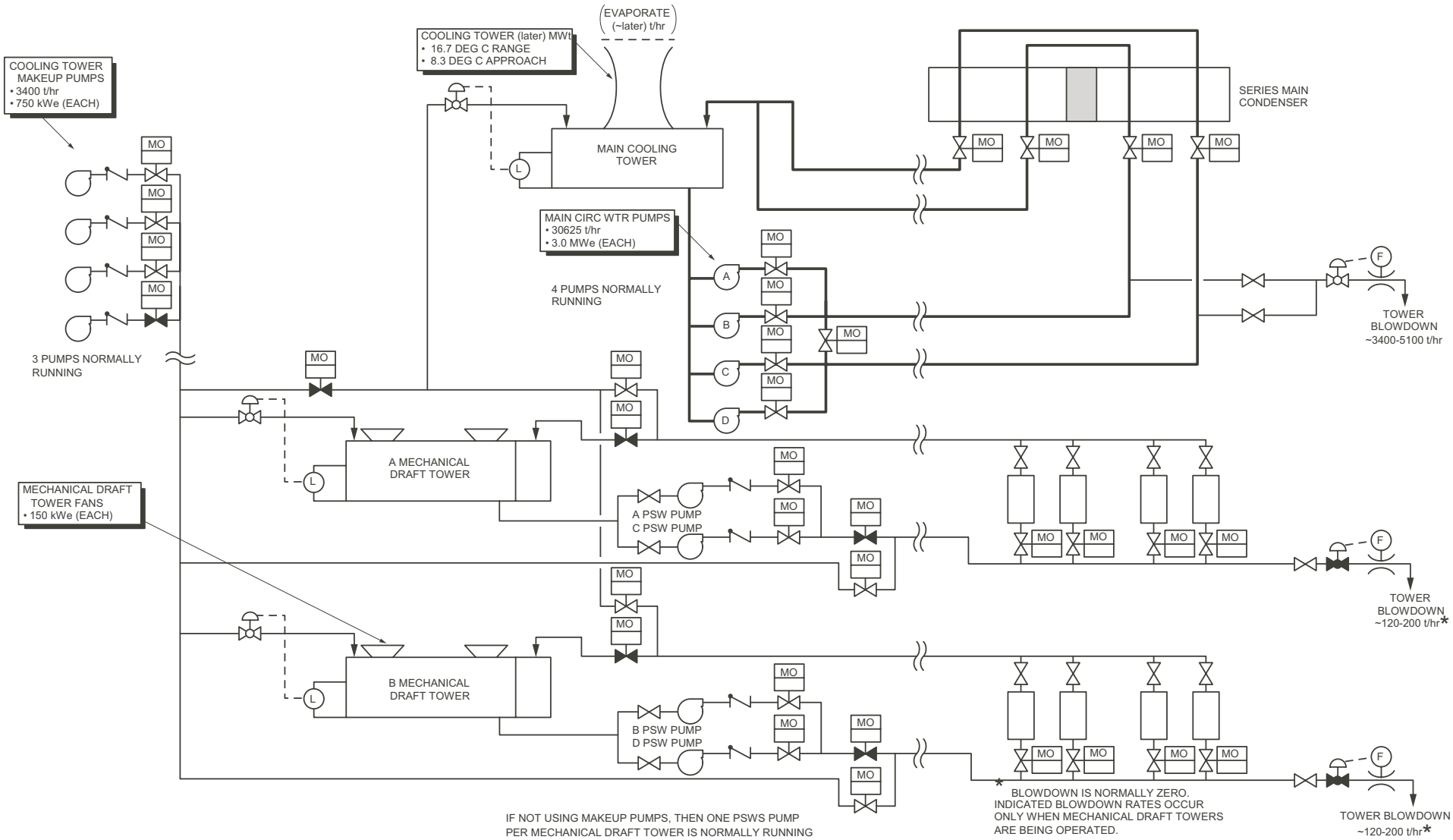

Appendix B
Arrangement Drawings

Section A-A (0-180°) Reactor Building, Containment and Auxiliary Fuel Building

Section B-B (90°-270°) Reactor Building, Containment and Auxiliary Fuel Building

Floor Elevation 33600, Reactor Building, Containment and Auxiliary Fuel Building

Floor Elevation 26600, Reactor Building, Containment and Auxiliary Fuel Building

Floor Elevation 17500, Reactor Building, Containment and Auxiliary Fuel Building

Floor Elevation 13570, Reactor Building, Containment and Auxiliary Fuel Building

Floor Elevation 4650, Reactor Building, Containment and Auxiliary Fuel Building

Floor Elevation -1300, Reactor Building, Containment and Auxiliary Fuel Building

Floor Elevation -6400, Reactor Building, Containment and Auxiliary Fuel Building

Floor Elevation -10000, Reactor Building, Containment and Auxiliary Fuel Building

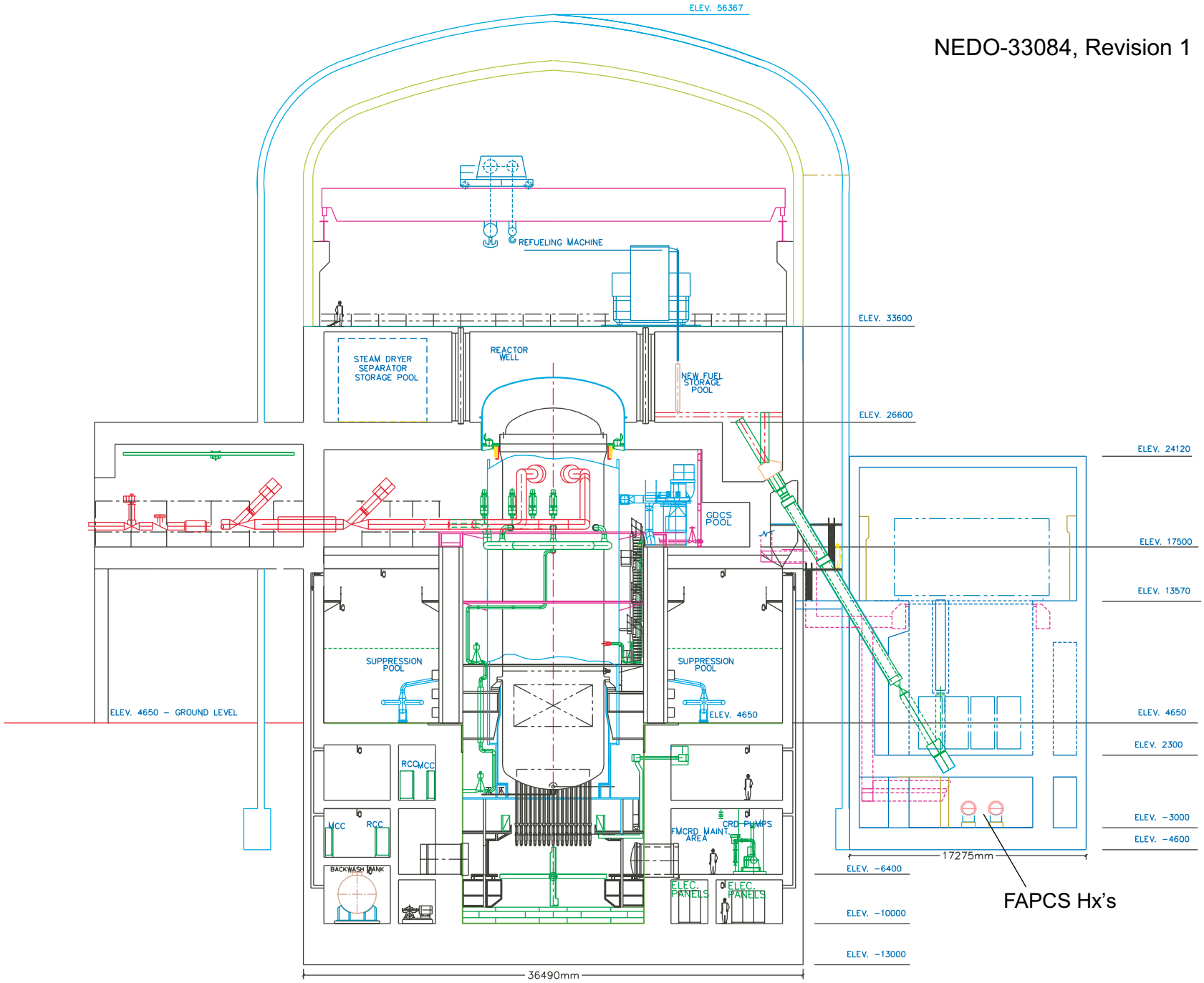

SECTION "A–A"
(0°–180°)

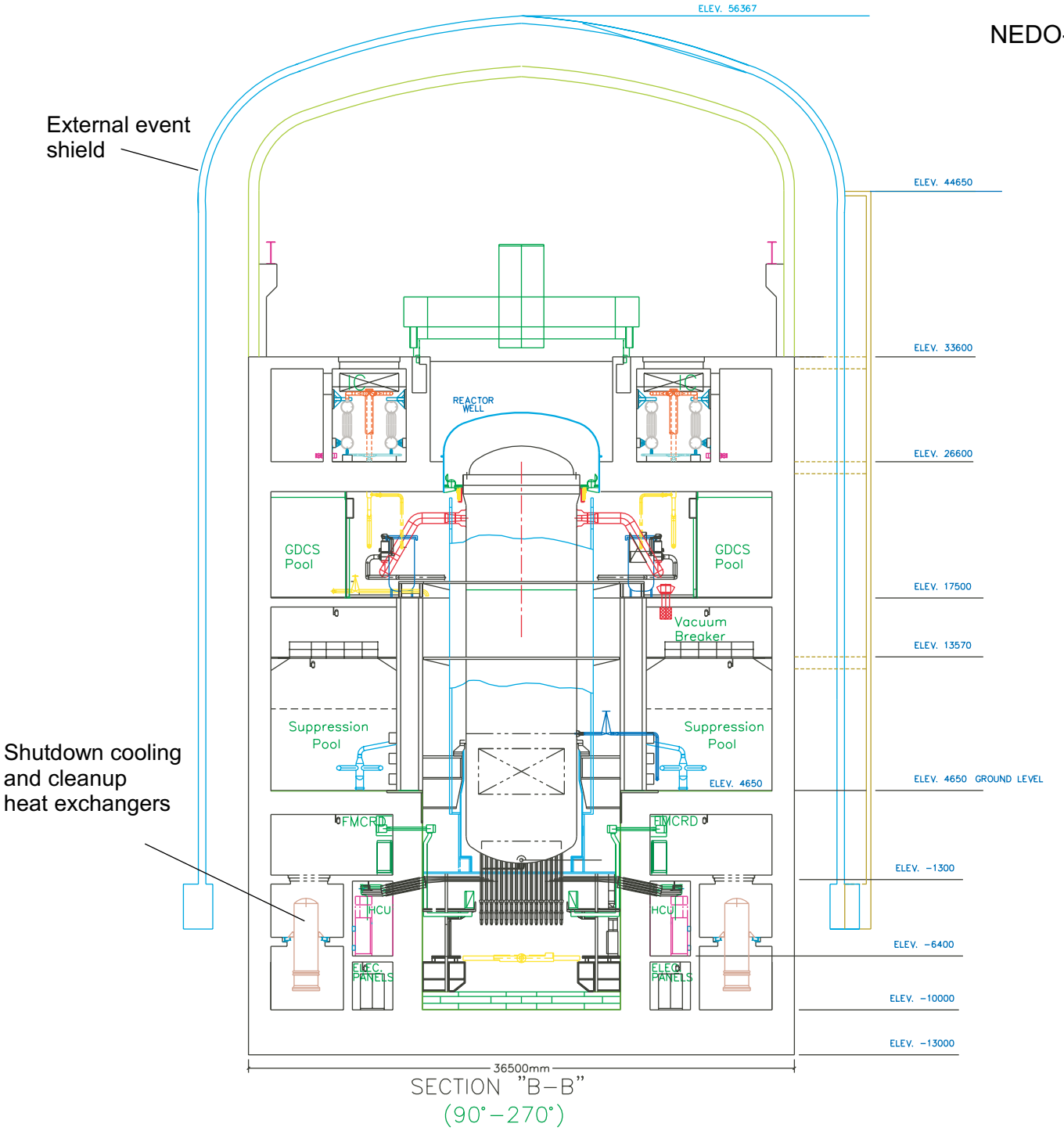
External event shield
Shutdown cooling and cleanup heat exchangers
ELEV. 56367
ELEV. 44650
ELEV. 33600
ELEV. 26600
ELEV. 17500
ELEV. 13570
ELEV. 4650 GROUND LEVEL
ELEV. -1300
ELEV. -6400
ELEV. -10000
ELEV. -13000
REACTOR WELL
GDCS Pool
GDCS Pool
Vacuum Breaker
Suppression Pool
Suppression Pool
ELEV. 4650
FMCRD
FMCRD
HCU
HCU
ELEC. PANELS
ELEC. PANELS
36500mm
SECTION "B-B"
(90°-270°)

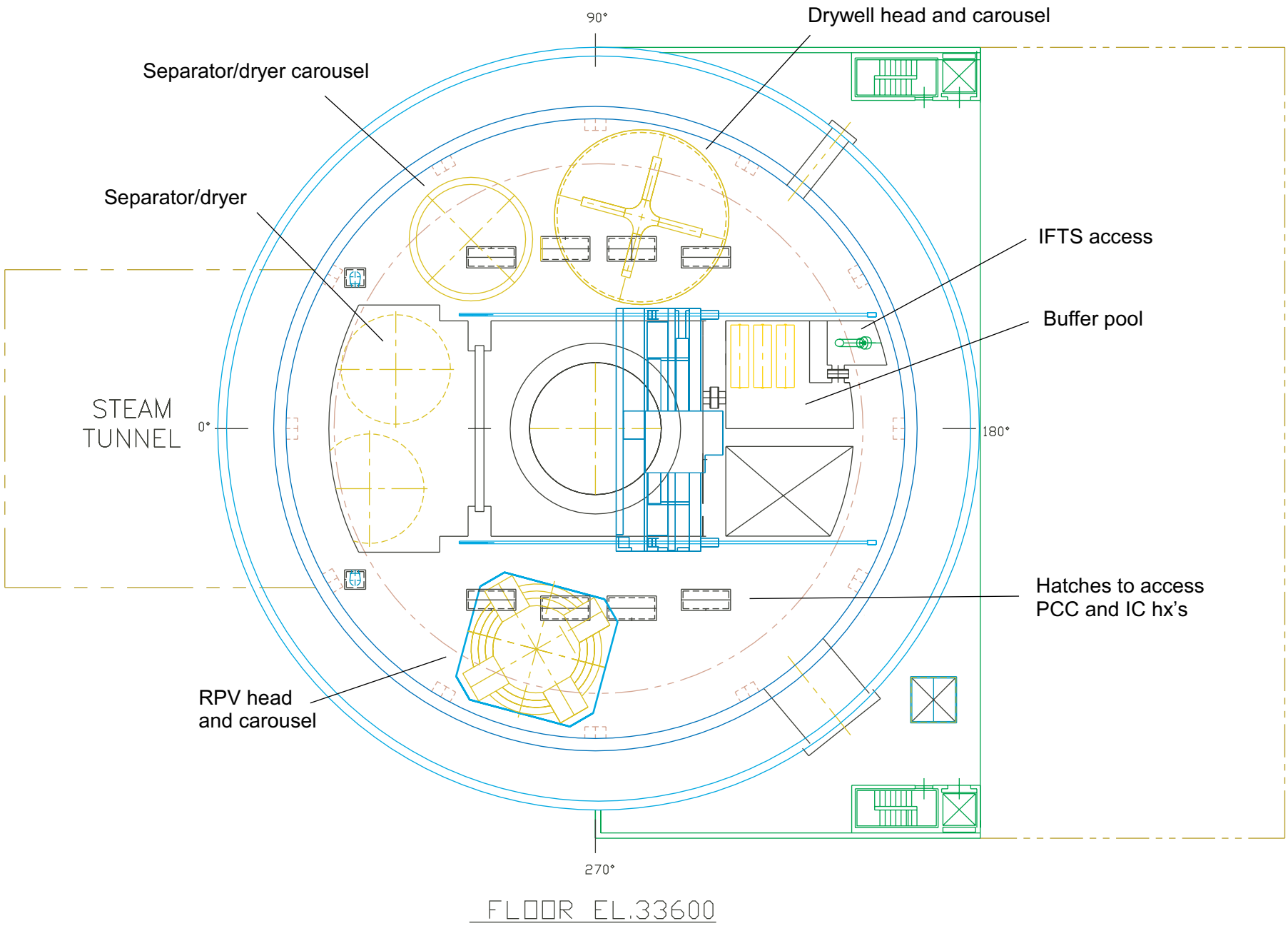
90°
Drywell head and carousel
Separator/dryer carousel
Separator/dryer
IFTS access
Buffer pool
STEAM
TUNNEL
0°
180°
Hatches to access
PCC and IC hx's
RPV head
and carousel
270°
FLOOR EL.33600

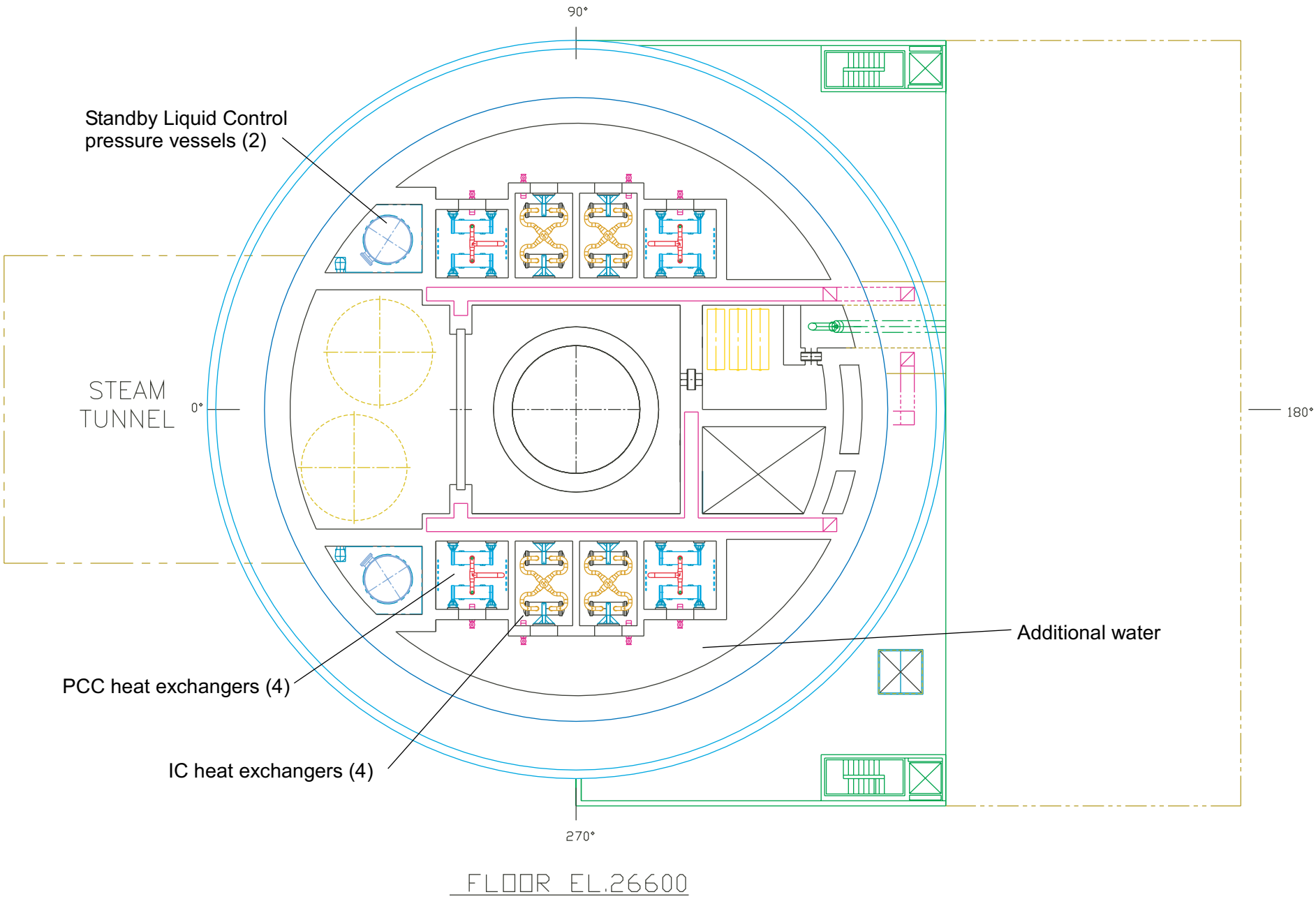
90°
Standby Liquid Control
pressure vessels (2)
STEAM
TUNNEL
0°
180°
Additional water
PCC heat exchangers (4)
IC heat exchangers (4)
270°
FLOOR EL.26600

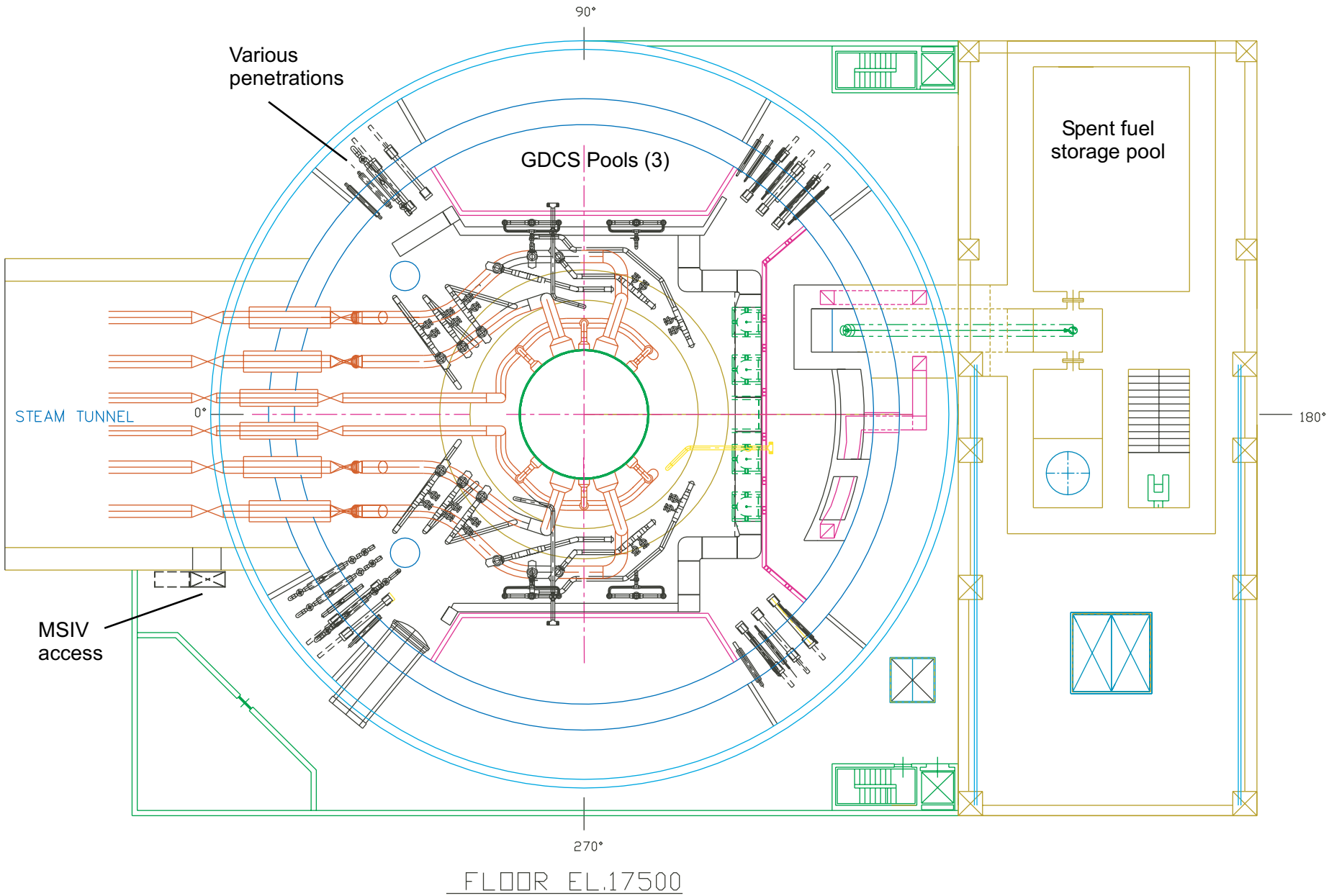
90°
Various
penetrations
GDCS Pools (3)
Spent fuel
storage pool
STEAM TUNNEL
0°
180°
MSIV
access
270°
FLOOR EL.17500

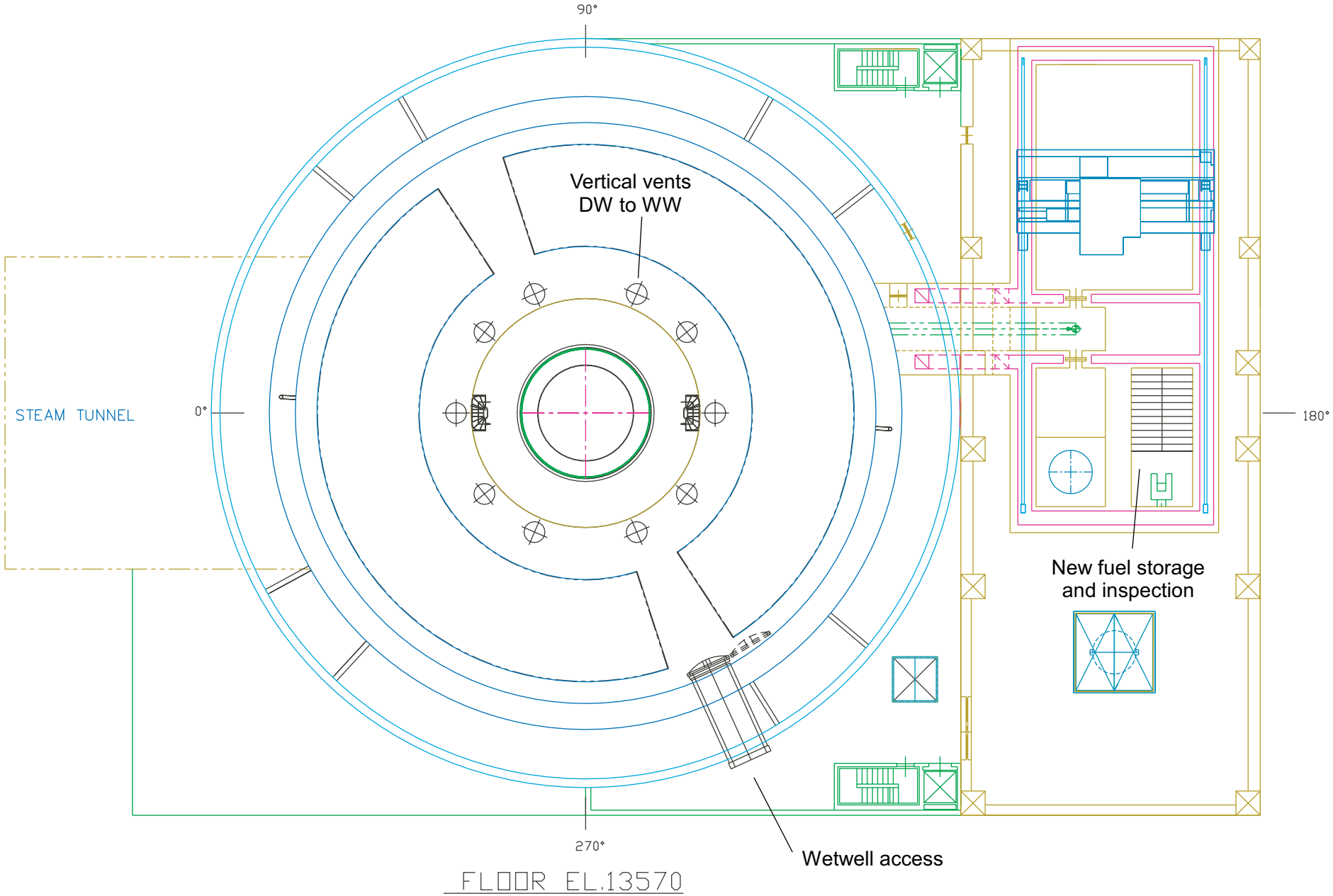
90°
Vertical vents
DW to WW
STEAM TUNNEL
0°
180°
New fuel storage
and inspection
270°
Wetwell access
FLOOR EL.13570

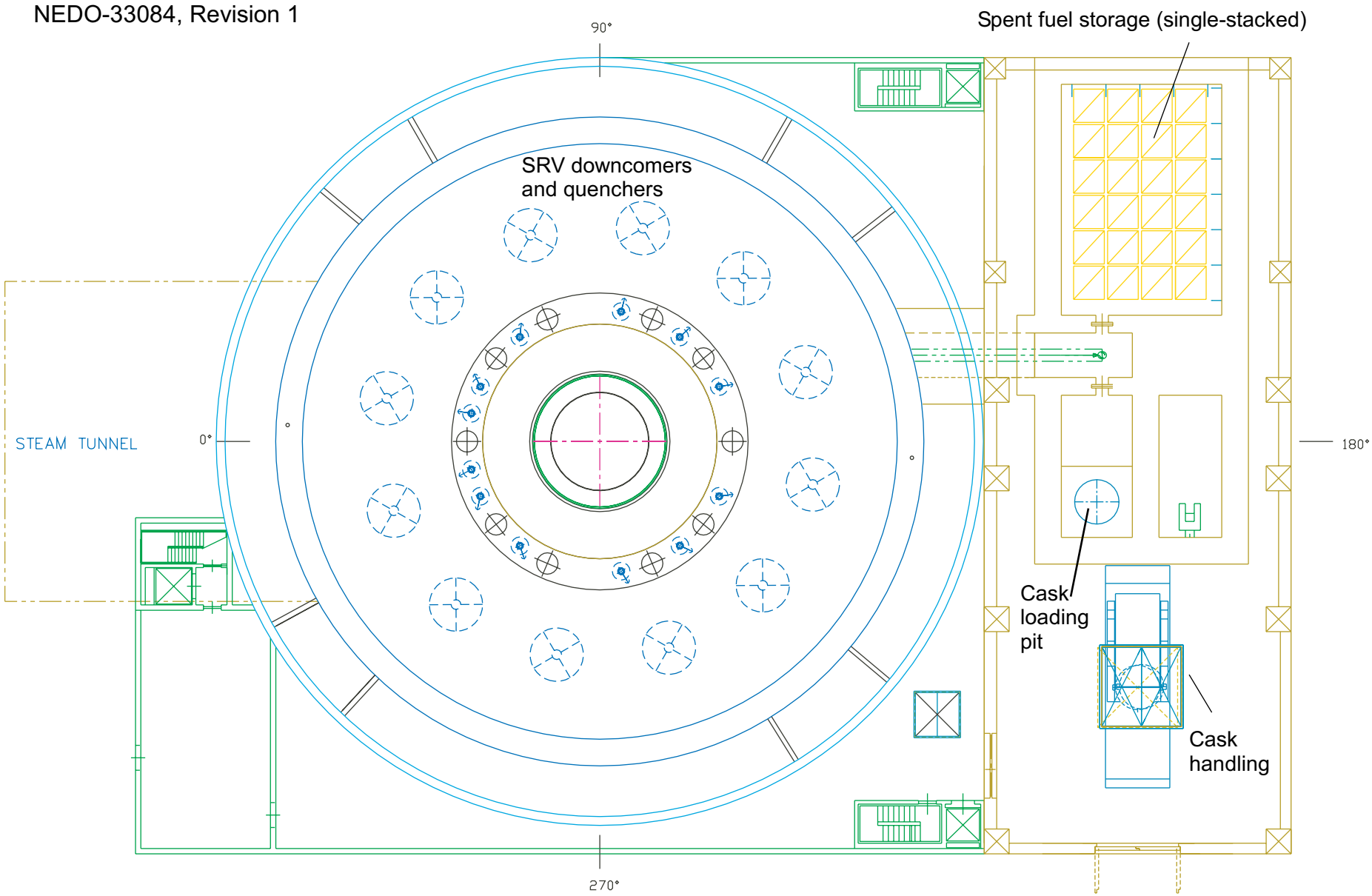

FLOOR EL.4650 GROUND LEVEL

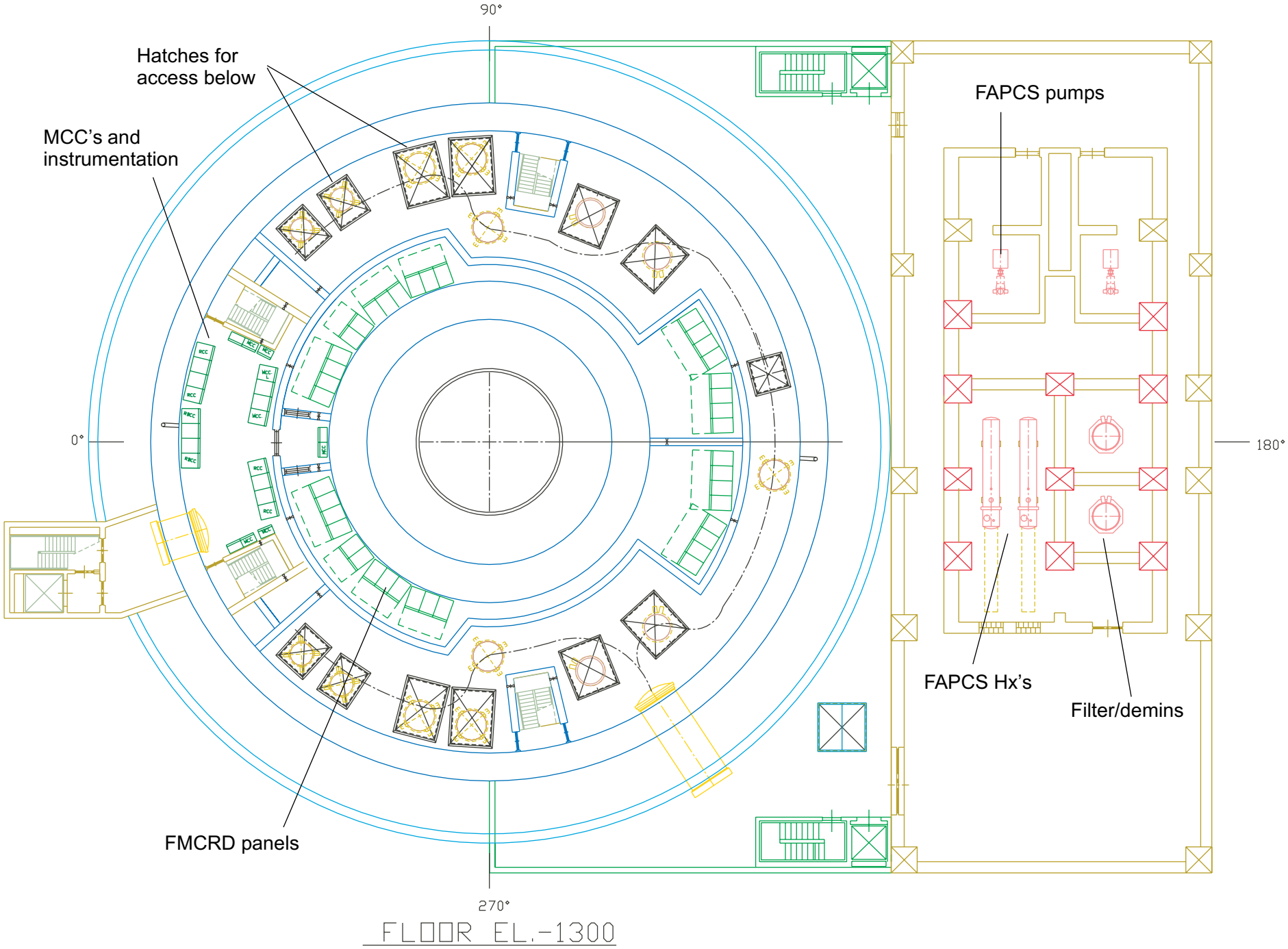
90°
Hatches for access below
MCC's and instrumentation
FAPCS pumps
0°
180°
FAPCS Hx's
Filter/demins
FMCRD panels
270°
FLOOR EL.-1300

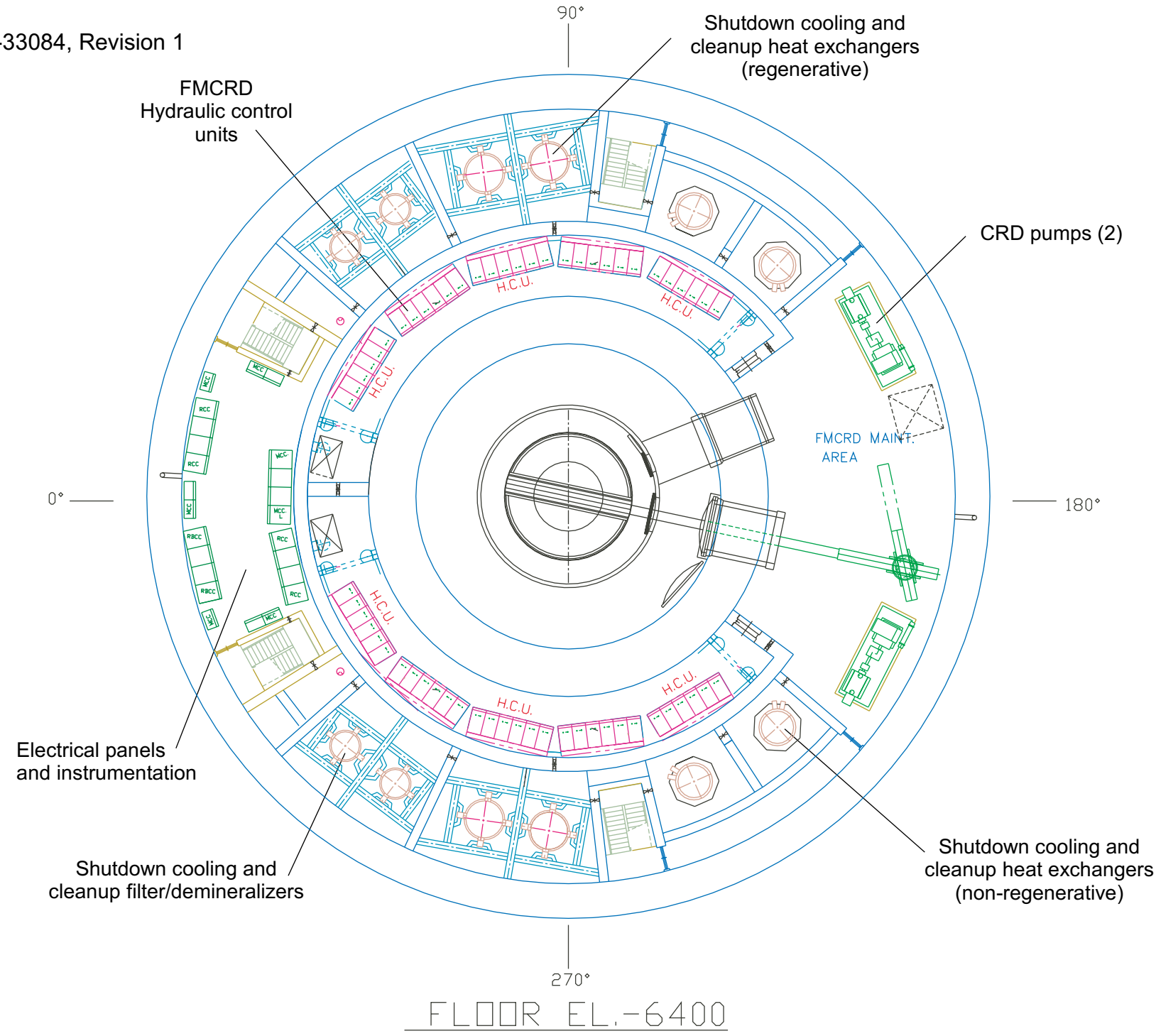
90°
Shutdown cooling and cleanup heat exchangers (regenerative)
FMCRD Hydraulic control units
CRD pumps (2)
H.C.U.
H.C.U.
H.C.U.
H.C.U.
H.C.U.
H.C.U.
FMCRD MAINT. AREA
0°
180°
Electrical panels and instrumentation
Shutdown cooling and cleanup filter/demineralizers
Shutdown cooling and cleanup heat exchangers (non-regenerative)
270°
FLOOR EL.-6400

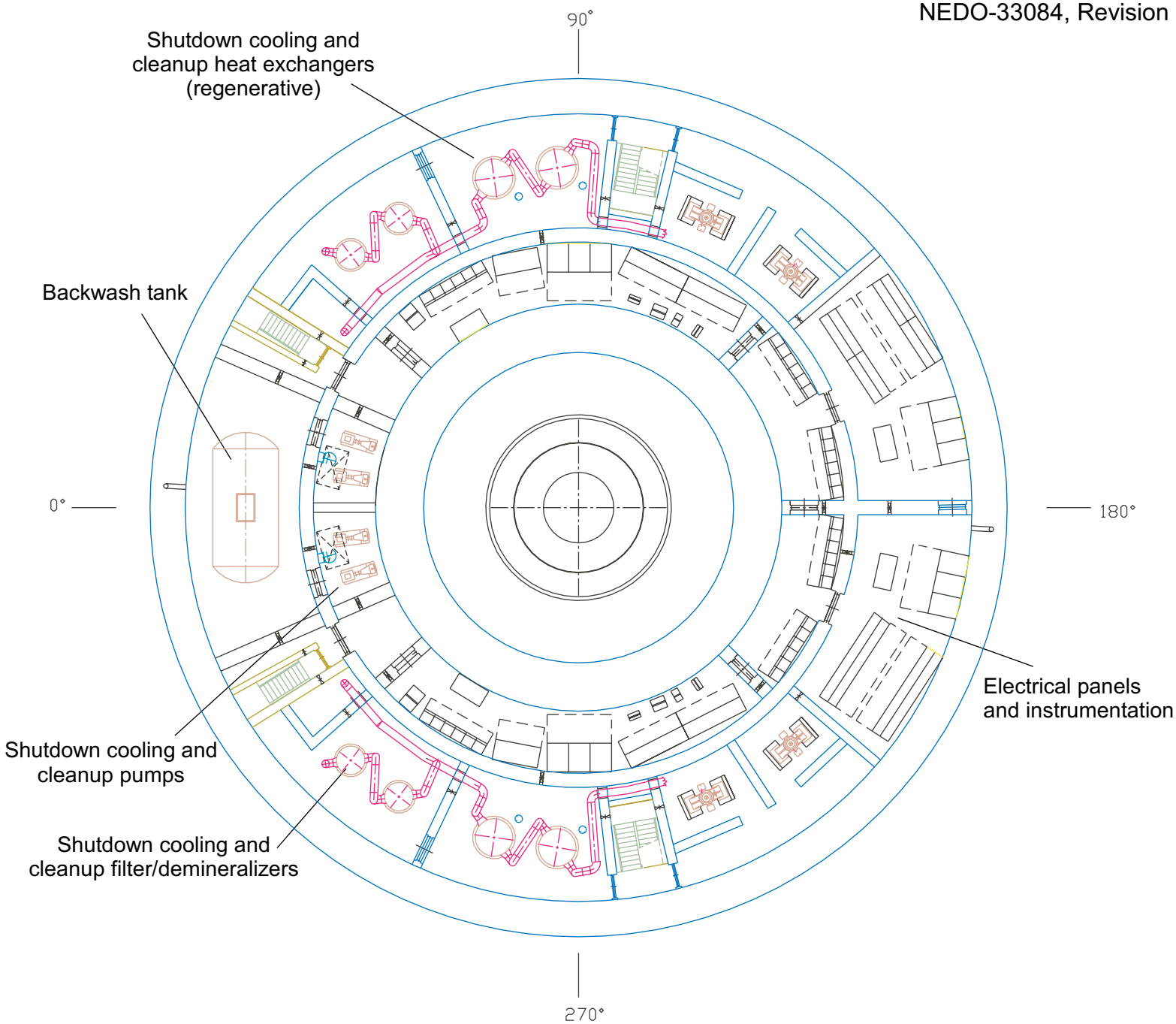

BOTTOM FLOOR EL.-10000