PSEG Nuclear LLC
P.O. Box 236, Hancocks Bridge, New Jersey 08038-0236

LRN-03-0404

PSEG
Nuclear LLC

SEP 2 2 2003

U. S. Nuclear Regulatory Commission
ATTN: Document Control Desk
Washington, DC 20555-0001

ADDITIONAL INFORMATION REGARDING
PRESSURE SENSOR RESPONSE TIME TESTING
SALEM UNIT NOS. 1 AND 2
FACILITY OPERATING LICENSE NOS. DPR-70 AND DPR-75
DOCKET NOS. 50-272 AND 50-311

On September 10, 2003, a telecon was held between PSEG Nuclear LLC (PSEG) and the NRC staff concerning PSEG's request for amendment to eliminate response time testing for pressure sensors. The attached information provides PSEG's response to the NRC Staff's questions.

Attachment 1 provides the responses to the NRC questions. Attachment 2 contains the actual response time test data used to develop the bounding response times documented in PSEG's letter LR-N03-0349, dated August 28, 2003.

Should you have any questions regarding this submittal, please contact Mr. Brian Thomas at 856-339-2022.

I declare under penalty of perjury that the foregoing is true and correct.

Executed on 22 September 2003 Sincerely,

John Carlin
Vice President – Engineering

Attachments (3)

A001

C Mr. H. J. Miller, Administrator - Region I
U. S. Nuclear Regulatory Commission
475 Allendale Road
King of Prussia, PA 19406

U. S. Nuclear Regulatory Commission
ATTN: Mr. R. Fretz, Licensing Project Manager - Salem
Mail Stop 08B2
Washington, DC 20555-0001

USNRC Senior Resident Inspector - Salem (X24)

Mr. K. Tosch, Manager IV
Bureau of Nuclear Engineering
PO Box 415
Trenton, NJ 08625

SALEM GENERATING STATION
UNIT NOS. 1 AND 2
FACILITY OPERATING LICENSE NOS. DPR-70 AND DPR-75
DOCKET NOS. 50-272 AND 50-311
ADDITIONAL INFORMATION
PRESSURE SENSOR RESPONSE TIME TESTING

On September 10, 2003, the NRC requested the following information regarding PSEG Nuclear LLC's (PSEG) request for amendment to revise the response time requirements for pressure sensors for Salem Unit Nos. 1 and 2.

NRC Question 1:

Explain the differences in response time values included in PSEG's August 28, 2003 letter for the same model Rosemount 1154 transmitters. Please provide the actual response time testing data used to determine the bounding values. Also provide an explanation of the method used to obtain the response time data.

PSEG Response to Question 1:

In PSEG's letter LR-N03-0349, dated August 28, 2003, different response times were identified for the Pressurizer Pressure, RCS Loss of Flow, Steam Generator Water Level, Steam Line Pressure and Steam Line Flow transmitters. Each of these functions utilizes a Rosemount 1154 transmitter. The reasons for the different response times for the various functions using Rosemount 1154 transmitters are three fold:

1) The different functions described above use Rosemount 1154 with different sensor ranges. The Pressurizer Pressure function uses a Rosemount 1154SH9RA transmitter with a range of 0-500 psig to 0-3000 psig. The RCS Loss of Flow function uses a Rosemount 1154HH5RH transmitter with a range of 0-125 to 0-750 inches of water. The Steam Generator Water Level function uses a Rosemount 1154HH4RH transmitter with a range of 0-25 to 0-150 inches of water. The Steam Line Pressure function uses a Rosemount 1154SH9RA transmitter with a range of 0-500 psig to 0-3000 psig. The Steam Line Flow function uses a Rosemount 1154HH5RH-N0037 transmitter (damping option) with a range of 0-125 to 0-750 inches of water. The Rosemount specified response times at a fixed temperature constant of 100 degrees F are 0.500 seconds for range 4 transmitters and 0.200 seconds for range 5 and 9 transmitters.

2) The Steam Line Flow transmitters have variable damping.

3) The different response time is also attributed to the different transmitter applications (sensing line lengths) since the provided response times were obtained by noise analysis technique which uses the process generated noise into the transmitter to

determine the response time. Attachment 3 provides a description of the noise analysis testing method from the Analysis and Measurement Services (AMS) testing report.

Attachment 2 provides the data from the last five surveillance tests (Unit 2- November 1998, Unit 1 – August 1999, Unit 2 – August 2000, Unit 1 March 2001, Unit 2 – March 2002) used to determine the bounding values contained in PSEG's August 28, 2003 letter. Please note that upon a subsequent review of the data contained in Attachment 2, the response time bounding value for containment pressure provided in the August 28, 2003 letter is being revised as described in the table below. The bounding values provided in the August 28, 2003 letter were determined by a review of the attached data, taking the highest obtained value and adding additional margin to this value. PSEG has also reviewed the data in attachment 2 and performed a 0.95/0.95 confidence evaluation of the data using the guidance of NUREG-1475, "Applying Statistics", Table T-11b.

Based on the above assessment of response time values, the following bounding values will be used:

Table 1 – Reactor Trip System (RTS) Functions

FUNCTION	SENSOR TYPE	SENSOR TIME
Pressurizer Pressure - Low	Rosemount 1154	0.600 sec
Pressurizer Pressure - High	Rosemount 1154	0.600 sec
RCS Loss of Flow	Rosemount 1154	0.300 sec
S/G Level – Low-Low	Rosemount 1154	1.000 sec

Table 2 – Engineered Safety Feature Actuation System (ESFAS) Functions

FUNCTION	SENSOR TYPE	SENSOR TIME
Containment Pressure - High	Rosemount 1153	0.800 sec
Pressurizer Pressure - Low	Rosemount 1154	0.600 sec
Steam Line Differential Pressure – High	Rosemount 1154	0.100 sec
Steam Flow – High	Rosemount 1154	1.000 sec
Containment Pressure – High-High	Rosemount 1153	0.800 sec
S/G Water Level – High	Rosemount 1154	1.000 sec
S/G Water Level – Low-Low	Rosemount 1154	1.000 sec

NRC Question 2

What actions are taken when a response time for a transmitter with variable damping is found out of calibration? .

PSEG Response to Question 2

When a transmitter's (with or without damping) response time is found out of specification, a notification is written in accordance with PSEG's corrective action program to document the out of specification value and to implement troubleshooting activities.

In the case of transmitters at Salem Units 1 and 2 with variable damping, the only function that is response time tested that has variable damping are the steam flow transmitters. The typical maintenance practice when the steam flow transmitter response times are found out of specification or are suspected of being out of specification is to replace the transmitter with bench tested transmitters (damping is set on the bench and response time performed prior to field installation). Once the variable damping is set for the transmitter on the bench, the transmitter damping is not adjusted in the field. If the transmitter is found to have a response time out of specification, the typical practice is not to adjust the damping setting to get the response time back into specification but to replace the transmitter since these transmitters are located inside containment.

Following approval of this request to change the Technical Specifications, response time testing will no longer be periodically performed on these transmitters. Response time testing will only be conducted when a transmitter is replaced or maintenance is performed on the transmitter that would impact response time.

Attachment 2

LR-N03-0404

Surveillance Testing Data
Salem Units 1 and 2

	Noise Method					Rosemount Transmitter		
	Nov-98	Aug-99	Aug-00	Mar-01	Mar-02	(Fixed TC @ 100 Deg F)	Model #	Range
Reactor Coolant Flow Loops								
S1RC -1FT414		0.130				0.2 sec	1154HH5RH	0 - 125 to 0 - 750 inH2O
S1RC -1FT415				0.240		0.2 sec	1154HH5RH	0 - 125 to 0 - 750 inH2O
S1RC -1FT424		0.100				0.2 sec	1154HH5RH	0 - 125 to 0 - 750 inH2O
S1RC -1FT425				0.250		0.2 sec	1154HH5RH	0 - 125 to 0 - 750 inH2O
S1RC -1FT434		0.070				0.2 sec	1154HH5RH	0 - 125 to 0 - 750 inH2O
S1RC -1FT435				0.180		0.2 sec	1154HH5RH	0 - 125 to 0 - 750 inH2O
S1RC -1FT444		0.080				0.2 sec	1154HH5RH	0 - 125 to 0 - 750 inH2O
S1RC -1FT445				0.220		0.2 sec	1154HH5RH	0 - 125 to 0 - 750 inH2O
S2RC -2FT414	0.200					0.2 sec	1154HH5RH	0 - 125 to 0 - 750 inH2O
S2RC -2FT415			0.170			0.2 sec	1154HH5RH	0 - 125 to 0 - 750 inH2O
S2RC -2FT416					0.260	0.2 sec	1154HH5RH	0 - 125 to 0 - 750 inH2O
S2RC -2FT424	0.150					0.2 sec	1154HH5RH	0 - 125 to 0 - 750 inH2O
S2RC -2FT425			0.130			0.2 sec	1154HH5RH	0 - 125 to 0 - 750 inH2O
S2RC -2FT426					0.190	0.2 sec	1154HH5RH	0 - 125 to 0 - 750 inH2O
S2RC -2FT434	0.130					0.2 sec	1154HH5RH	0 - 125 to 0 - 750 inH2O
S2RC -2FT435			0.130			0.2 sec	1154HH5RH	0 - 125 to 0 - 750 inH2O
S2RC -2FT436					0.170	0.2 sec	1154HH5RH	0 - 125 to 0 - 750 inH2O
S2RC -2FT444	0.170					0.2 sec	1154HH5RH	0 - 125 to 0 - 750 inH2O
S2RC -2FT445			0.160			0.2 sec	1154HH5RH	0 - 125 to 0 - 750 inH2O
S2RC -2FT446					0.200	0.2 sec	1154HH5RH	0 - 125 to 0 - 750 inH2O

Pressurizer Pressure - High and Low								
	Nov-98	Aug-99	Aug-00	Mar-01	Mar-02	Fixed TC	Model #	Range
S1RC -1PT455		0.410				0.2 sec	1154SH9RA	0 - 500 to 0 - 3000 psig
S1RC -1PT456				0.450		0.2 sec	1154SH9RA	0 - 500 to 0 - 3000 psig
S1RC -1PT457						0.2 sec	1154SH9RA	0 - 500 to 0 - 3000 psig
S1RC -1PT474				0.470		0.2 sec	1154SH9RA	0 - 500 to 0 - 3000 psig
S2RC -2PT455			0.470			0.2 sec	1154SH9RA	0 - 500 to 0 - 3000 psig
S2RC -2PT456			0.410			0.2 sec	1154SH9RA	0 - 500 to 0 - 3000 psig
S2RC -2PT457					0.320	0.2 sec	1154SH9RA	0 - 500 to 0 - 3000 psig
S2RC -2PT474			0.410			0.2 sec	1154SH9RA	0 - 500 to 0 - 3000 psig

Steam Generator Water Level								
	Nov-98	Aug-99	Aug-00	Mar-01	Mar-02	Fixed TC	Model #	Range
S1CN -1LT517		0.480				0.5 sec	1154HH4RH	0 - 25 to 0 - 150 inH2O
S1CN -1LT519				0.430		0.5 sec	1154HH4RH	0 - 25 to 0 - 150 inH2O
S1CN -1LT527		0.500				0.5 sec	1154HH4RH	0 - 25 to 0 - 150 inH2O
S1CN -1LT529				0.520		0.5 sec	1154HH4RH	0 - 25 to 0 - 150 inH2O
S1CN -1LT537		0.490				0.5 sec	1154HH4RH	0 - 25 to 0 - 150 inH2O
S1CN -1LT539				0.660		0.5 sec	1154HH4RH	0 - 25 to 0 - 150 inH2O
S1CN -1LT547		0.520				0.5 sec	1154HH4RH	0 - 25 to 0 - 150 inH2O
S1CN -1LT549				0.370		0.5 sec	1154HH4RH	0 - 25 to 0 - 150 inH2O
S2CN -2LT517	0.540					0.5 sec	1154HH4RH	0 - 25 to 0 - 150 inH2O
S2CN -2LT518					0.600	0.5 sec	1154HH4RH	0 - 25 to 0 - 150 inH2O
S2CN -2LT519			0.290			0.5 sec	1154HH4RH	0 - 25 to 0 - 150 inH2O
S2CN -2LT527	0.390					0.5 sec	1154HH4RH	0 - 25 to 0 - 150 inH2O
S2CN -2LT528					0.860	0.5 sec	1154HH4RH	0 - 25 to 0 - 150 inH2O
S2CN -2LT529			0.440			0.5 sec	1154HH4RH	0 - 25 to 0 - 150 inH2O
S2CN -2LT537	0.410					0.5 sec	1154HH4RH	0 - 25 to 0 - 150 inH2O
S2CN -2LT538					0.800	0.5 sec	1154HH4RH	0 - 25 to 0 - 150 inH2O
S2CN -2LT539			0.280			0.5 sec	1154HH4RH	0 - 25 to 0 - 150 inH2O
S2CN -2LT547	0.430					0.5 sec	1154HH4RH	0 - 25 to 0 - 150 inH2O
S2CN -2LT548					0.850	0.5 sec	1154HH4RH	0 - 25 to 0 - 150 inH2O
S2CN -2LT549			0.410			0.5 sec	1154HH4RH	0 - 25 to 0 - 150 inH2O

Containment Pressure								
	Nov-98	Aug-99	Aug-00	Mar-01	Mar-02	Fixed TC	Model #	Range
S1CS -1PT948A				0.230		0.2 sec	1153HD6PA	0 - 17 to 0 - 100 psid
S1CS -1PT948B						0.2 sec	1153HD6PA	0 - 17 to 0 - 100 psid
S1CS -1PT948C				0.200		0.2 sec	1153HD6PA	0 - 17 to 0 - 100 psid
S2CS -2PT948A			0.390			0.2 sec	1153HD6PA	0 - 17 to 0 - 100 psid
S2CS -2PT948B					0.150	0.2 sec	1153HD6PA	0 - 17 to 0 - 100 psid
S2CS -2PT948C			0.420			0.2 sec	1153HD6PA	0 - 17 to 0 - 100 psid
S2CS -2PT948D			0.460			0.2 sec	1153HD6PA	0 - 17 to 0 - 100 psid

Steam Pressure								
	Nov-98	Aug-99	Aug-00	Mar-01	Mar-02	Fixed TC	Model #	Range
S1CN -1PT514		0.040				0.2 sec	1154SH9RA	0 - 500 to 0 - 3000 psig
S1CN -1PT515				0.020		0.2 sec	1154SH9RA	0 - 500 to 0 - 3000 psig
S1CN -1PT524		0.040				0.2 sec	1154SH9RA	0 - 500 to 0 - 3000 psig
S1CN -1PT525				0.030		0.2 sec	1154SH9RA	0 - 500 to 0 - 3000 psig
S1CN -1PT534		0.030				0.2 sec	1154SH9RA	0 - 500 to 0 - 3000 psig
S1CN -1PT535				0.030		0.2 sec	1154SH9RA	0 - 500 to 0 - 3000 psig
S1CN -1PT544		0.040				0.2 sec	1154SH9RA	0 - 500 to 0 - 3000 psig
S1CN -1PT545				0.050		0.2 sec	1154SH9RA	0 - 500 to 0 - 3000 psig
S2CN -2PT514	0.010					0.2 sec	1154SH9RA	0 - 500 to 0 - 3000 psig
S2CN -2PT515			0.030			0.2 sec	1154SH9RA	0 - 500 to 0 - 3000 psig
S2CN -2PT516	0.030				0.030	0.2 sec	1154SH9RA	0 - 500 to 0 - 3000 psig
S2CN -2PT524	0.020					0.2 sec	1154SH9RA	0 - 500 to 0 - 3000 psig
S2CN -2PT525			0.030			0.2 sec	1154SH9RA	0 - 500 to 0 - 3000 psig
S2CN -2PT526					0.030	0.2 sec	1154SH9RA	0 - 500 to 0 - 3000 psig
S2CN -2PT534	0.020					0.2 sec	1154SH9RA	0 - 500 to 0 - 3000 psig
S2CN -2PT535			0.030			0.2 sec	1154SH9RA	0 - 500 to 0 - 3000 psig
S2CN -2PT536					0.030	0.2 sec	1154SH9RA	0 - 500 to 0 - 3000 psig
S2CN -2PT544	0.010					0.2 sec	1154SH9RA	0 - 500 to 0 - 3000 psig
S2CN -2PT545			0.030			0.2 sec	1154SH9RA	0 - 500 to 0 - 3000 psig
S2CN -2PT546	0.020				0.040	0.2 sec	1154SH9RA	0 - 500 to 0 - 3000 psig

Steam Flow								
	Nov-98	Aug-99	Aug-00	Mar-01	Mar-02	Fixed TC	Model #	Range
1FT-512		0.79				Damping Option	1154HH5RH-N0037	0 - 125 to 0 - 750 inH2O
1FT-522		0.76				Damping Option	1154HH5RH-N0037	0 - 125 to 0 - 750 inH2O
1FT-532		0.72				Damping Option	1154HH5RH-N0037	0 - 125 to 0 - 750 inH2O
1FT-542		0.77				Damping Option	1154HH5RH-N0037	0 - 125 to 0 - 750 inH2O
1FT-513				0.63		Damping Option	1154HH5RH-N0037	0 - 125 to 0 - 750 inH2O
1FT-523				0.62		Damping Option	1154HH5RH-N0037	0 - 125 to 0 - 750 inH2O
1FT-533				0.57		Damping Option	1154HH5RH-N0037	0 - 125 to 0 - 750 inH2O
1FT-543				0.63		Damping Option	1154HH5RH-N0037	0 - 125 to 0 - 750 inH2O
2FT-512	0.82				0.76	Damping Option	1154HH5RH-N0037	0 - 125 to 0 - 750 inH2O
2FT-513			0.75			Damping Option	1154HH5RH-N0037	0 - 125 to 0 - 750 inH2O
2FT-522	0.81				0.77	Damping Option	1154HH5RH-N0037	0 - 125 to 0 - 750 inH2O
2FT-523			0.77			Damping Option	1154HH5RH-N0037	0 - 125 to 0 - 750 inH2O
2FT-532	0.77				0.80	Damping Option	1154HH5RH-N0037	0 - 125 to 0 - 750 inH2O
2FT-533			0.77			Damping Option	1154HH5RH-N0037	0 - 125 to 0 - 750 inH2O
2FT-542	0.76				0.75	Damping Option	1154HH5RH-N0037	0 - 125 to 0 - 750 inH2O
2FT-543			0.76			Damping Option	1154HH5RH-N0037	0 - 125 to 0 - 750 inH2O

NUREG-1475 Data Analysis					
	n	k(95/95/n)	s	Xbar	95/95
Reactor Coolant Flow Loop	20	2.396	0.053239775	0.167	0.2941
Pressurizer Pressure High/Low	7	3.399	0.051961524	0.420	0.5966
Steam Gen Water Level	20	2.396	0.166710433	0.514	0.9129
Containment Pressure	6	3.708	0.130447946	0.308	0.7920
Steam Pressure	22	2.349	0.00971454	0.029	0.0519
Steam Flow	20	2.396	0.06942622	0.739	0.9053

Notes: 95/95 denotes 95% confident that 95% of the values fall below what is in the 95/95 column.
95/95 value = k*s + Xbar, where k = factor determined from Table T-11b of NUREG-1475
s = standard deviation, Xbar = mean, n = number of sample points

TABLE 1

Results of Response Time Testing of Rosemount Pressure Transmitters at Salem Unit 2

(Testing of November 1998)

Item	Tag Number	Response Time (sec)
	Reactor Coolant Flow	
1	2FT-414	0.20
2	2FT-424	0.15
3	2FT-434	0.13
4	2FT-444	0.17
	Steam Flow	
5	2FT-512	0.82
6	2FT-522	0.81
7	2FT-532	0.77
8	2FT-542	0.76
	Steam Generator Level	
9	2LT-517	0.54
10	2LT-527	0.39
11	2LT-537	0.41
12	2LT-547	0.43
	Steam Pressure	
13	2PT-514	0.01
14	2PT-516	0.03
15	2PT-524	0.02
16	2PT-534	0.02
17	2PT-544	0.01
18	2PT-546	0.02

TABLE 1

Results of Response Time Testing of Rosemount Pressure Transmitters at Salem Unit 1

(Testing of August 1999)

Item	Tag Number	Response Time (sec)
Reactor Coolant Flow		
1	1FT-414	0.13
2	1FT-424	0.10
3	1FT-434	0.07
4	1FT-444	0.08
Steam Flow		
5	1FA-3472	0.74
6	1FA-3474	0.74
7	1FT-512	0.79
8	1FT-522	0.76
9	1FT-532	0.72
10	1FT-542	0.77
Steam Generator Level		
11	1LT-517	0.48
12	1LT-527	0.50
13	1LT-537	0.49
14	1LT-547	0.52
Pressurizer Pressure		
15	1PT-455	0.41
Steam Generator Pressure		
16	1PT-514	0.04
17	1PT-524	0.04
18	1PT-534	0.03
19	1PT-544	0.04

TABLE 1

Results of Response Time Testing of Pressure Transmitters at Salem Unit 2

(Testing of August 2000)

Item	Tag Number	Response Time (sec)
Pressurizer Pressure		
1	2PT-455	0.47
2	2PT-456	0.41
3	2PT-474	0.41
Reactor Coolant Flow		
4	2FT-415	0.17
5	2FT-425	0.13
6	2FT-435	0.13
7	2FT-445	0.16
Steam Generator Level		
8	2LT-519	0.29
9	2LT-529	0.44
10	2LT-539	0.28
11	2LT-549	0.41
Steam Flow		
12	2FA-3471	0.70
13	2FA-3473	0.69
14	2FT-513	0.75
15	2FT-523	0.77
16	2FT-533	0.77
17	2FT-543	0.76
Steam Pressure		
18	2PT-515	0.03
19	2PT-525	0.03
20	2PT-535	0.03
21	2PT-545	0.03

TABLE 2 Results of Response Time Testing of Containment Pressure Transmitters at Salem Unit 2 (Testing of August 2000)		
Item	**Tag Number**	**Response Time (sec)**
Containment Pressure		
1	2PT-948A	0.39
2	2PT-948C	0.42
3	2PT-948D	0.46

TABLE 1

Results of Response Time Testing of Pressure Transmitters at Salem Unit 1

(Testing of March 2001)

Item	Tag Number	Response Time (sec)
Pressurizer Pressure		
1	1PT-456	0.45
2	1PT-474	0.47
Reactor Coolant Flow		
3	1FT-415	0.24
4	1FT-425	0.25
5	1FT-435	0.18
6	1FT-445	0.22
Steam Generator Level		
7	1LT-519	0.43
8	1LT-529	0.52
9	1LT-539	0.66
10	1LT-549	0.37
Steam Flow		
11	1FA-3471	0.65
12	1FA-3473	0.66
13	1FT-513	0.63
14	1FT-523	0.62
15	1FT-533	0.57
16	1FT-543	0.63
Steam Pressure		
17	1PT-515	0.02
18	1PT-525	0.03
19	1PT-535	0.03
20	1PT-545	0.05

TABLE 2

Results of Response Time Testing of Containment Pressure Transmitters at Salem Unit 1

(Testing of March 2001)

Item	Tag Number	Response Time (sec)
Containment Pressure		
1	1PT-948A	0.23
2	1PT-948C	0.20

AMS Response Time Testing Results for Pressure Transmitters

Plant Name: Salem Unit 2 Test Date: 03/22/02

Item Number	Service	Tag Number	Response Time (sec)
1	CNMT PSR	2PT-948B	0.15 ✓
2	PZR PSR	2PT-457	0.32 ✓
3	RC FLOW	2FT-416	0.26 ✓
4	RC FLOW	2FT-426	0.19 ✓
5	RC FLOW	2FT-436	0.17 ✓
6	RC FLOW	2FT-446	0.20 ✓
7	SG LEVEL	2LT-518	0.60 ✓
8	SG LEVEL	2LT-528	0.86 ✓
9	SG LEVEL	2LT-538	0.80 ✓
10	SG LEVEL	2LT-548	0.85 ✓
11	STM FLOW	2FA-3472	0.71
12	STM FLOW	2FA-3474	0.70
13	STM FLOW	2FT-512	0.76 ✓
14	STM FLOW	2FT-522	0.77 ✓
15	STM FLOW	2FT-532	0.80 ✓
16	STM FLOW	2FT-542	0.75 ✓
17	STM PSR	2PT-516	0.03 ✓
18	STM PSR	2PT-526	0.03 ✓
19	STM PSR	2PT-536	0.03 ✓
20	STM PSR	2PT-546	0.04 ✓

Descriptions:
1. The above results were obtained by remote testing of the transmitters using the noise analysis technique as described in NUREG / CR-5851.
2. The accuracy of the response time results from the noise analysis technique is +/- 0.10 seconds. Generally, noise analysis results are conservative and include the contribution of sensing lines.

Attachment 3

LR-N03-0404

Noise Analysis Method

1. INTRODUCTION

AMS performed response time testing on nineteen Rosemount pressure transmitters as installed at Salem Unit 1. The tests were performed in August 1999, while the plant was at normal power operation. The final test results have been reported to the plant technical representative in an AMS letter-report submitted earlier. The details of the work performed are presented here.

The response time tests reported here were performed using the noise analysis technique. This technique has been developed and validated for in-situ response time testing of pressure transmitters in nuclear power plants. The validation results and the principles of the test and its conditions are documented in NUREG/CR-5851 published by the U.S. Nuclear Regulatory Commission (NRC) in March 1993.

The noise analysis technique is based on monitoring the natural fluctuations (noise) that exist at the output of pressure transmitters while the plant is operating. These fluctuations are due to turbulence induced by the flow of water in the system, random heat transfer in the core, and other naturally occurring phenomena. The noise is extracted from the sensor output by removing the DC component of the signal, and amplifying the AC component. The AC component is recorded for about one hour and then analyzed to provide the response time of the sensor under the conditions tested. The test is performed remotely from the control room area where the sensor field leads reach their signal conversion and signal conditioning equipment in the plant's instrumentation cabinets.

The advantages of the noise analysis technique over the conventional methods include the following:

1. The noise analysis technique does not require physical access to the sensors and thereby eliminates all radiation exposure to the test personnel.
2. The test can be performed on several sensors at a time thereby reducing the test time significantly.
3. The instrument channels do not have to be taken out of service for the response time tests thereby eliminating an increased possibility of any plant trip during the tests.

2. HISTORICAL BACKGROUND

Response time testing of pressure transmitters in nuclear power plants began in the late 1970s when testing technology was developed under a project sponsored by the Electric Power Research Institute (EPRI). The EPRI project resulted in the development of a test instrument referred to as the Hydraulic Ramp Generator[1]. As its name implies, this system provides a test signal in the form of a pressure ramp that is injected into the transmitter under test to measure its delay with respect to the response of a high-speed reference transmitter. Although this instrument performs well in providing a suitable test signal and is simple to use for testing of pressure transmitters on the bench, practical considerations make it tedious to perform accurate tests in the field. Furthermore, since the test requires physical access to each transmitter, for those transmitters that are located in the radiation areas of the plant, response time measurements using the ramp test method would involve radiation exposure to the test personnel. These considerations stimulated research to develop new techniques for remote measurement of response time of pressure transmitters in nuclear power plants. As a result, two methods referred to as noise analysis and Power Interrupt (PI) test were developed and validated for in-situ response time testing of pressure transmitters[2]. The new methods are successfully used in numerous plants worldwide to meet sensor response time testing requirements.

A description of the ramp test and noise analysis technique is provided in Section 4 of this report.

---

1. Foster, C.G., et.al., "Sensor Response Time Verification", Report No. NP-267, Electric Power Research Institute, Palo Alto, California, October 1976.

2. Hashemian, H.M., Mitchell, D.W., Fain, R.E., and Petersen, K.M., "Long Term Performance and Aging Characteristics of Nuclear Plant Pressure Transmitters", NUREG/CR-5851, March 1993.

3. STANDARDS AND REQUIREMENTS

Sensor response time testing in nuclear power plants is governed by a number of standards by the Institute of Electrical and Electronics Engineers (IEEE), the American Society for Testing and Materials (ASTM), and the Instrument Society of America (ISA). In addition, there are International Electrotechnical Commission (IEC) standards that have been developed in cooperation with IEEE for the international nuclear power industry.

Three of the American standards which relate to sensor response time testing are:

ISA Standard 67.06. This standard was written to describe the methods for measurement of response times of temperature and pressure sensors in nuclear power plants. This standard is presently under revision to include on-line monitoring techniques for testing the calibration of sensors while the plant is operating. The title of the original 67.06 Standard is "Response Time Testing of Nuclear Safety-Related Instrument Channels in Nuclear Power Plants." The final version of this standard was published by ISA in 1984.

IEEE Standard 338. This standard describes the periodic testing of safety systems in nuclear power plants which includes functional tests, instrument checks, verification of proper calibration, and response time testing. The title of the IEEE 338 standard is "Standard Criteria for the Periodic Surveillance Testing of Nuclear Power Generating Station Safety Systems." The latest version of this standard was published in 1987.

ASTM Standard E644. This standard describes the methods for laboratory measurement of response time of Resistance Temperature Detectors (RTDs). These methods are used by sensor manufacturers to determine the response time of RTDs in a reference laboratory condition for comparison purposes. The title of the ASTM E644 Standard is "Standard Methods for Testing Industrial Resistance Thermometers." The final version of this standard is dated 1978.

The Regulatory Guide 1.118, which endorses IEEE Standard 338, is one of the bases for sensor response time measurements in nuclear power plants. The last version of this regulatory guide was published by the NRC in 1978.

4. RESPONSE TIME TESTING TECHNOLOGY

Response time testing methods for pressure transmitters may be divided into two groups of tests: 1) conventional methods which have been used since testing began in the late 1970s, and 2) on-line methods which are based on new technologies developed and validated in the last few years. The advantage of the on-line methods is that they permit remote testing at normal operating conditions, while the conventional methods require physical access to each transmitter and cannot usually be performed while the plant is operating. The disadvantage of the on-line methods is that they require sophisticated computer-aided data acquisition, data analysis, and interpretation techniques as opposed to the conventional methods which provide the response time of the transmitter directly.

4.1 Conventional Methods

The conventional methods for response time testing of pressure transmitters involve a hydraulic pressure generator to produce a test signal in the form of a step or ramp. The ramp test is more commonly used than the step test because design basis accidents in nuclear power plants usually assume pressure transients which approximate a ramp.

Figure 1 shows a simplified diagram of a hydraulic pressure generator. The pressure test signal, as generated by this equipment, is fed to the transmitter under test and simultaneously to a high speed reference transmitter. The outputs of the two transmitters are recorded on a dual channel strip chart recorder or a similar device and used to identify the response time of the transmitter. Figure 2 illustrates how the equipment is used to perform a ramp test and Figure 3 illustrates how the response time (τ) of the transmitter is determined from the ramp test data.

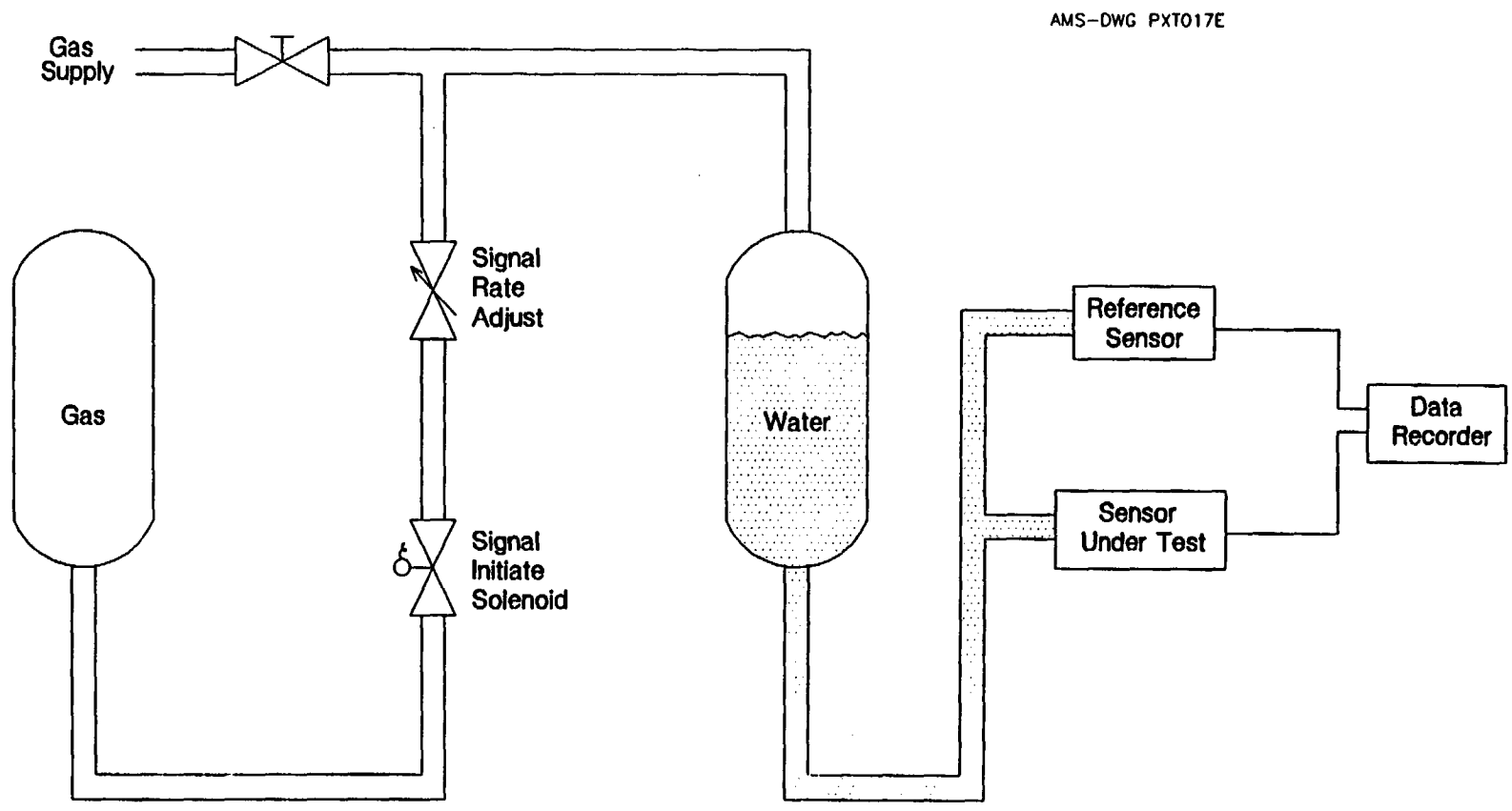

Figure 1. Simplified Diagram of a Hydraulic Ramp Generator

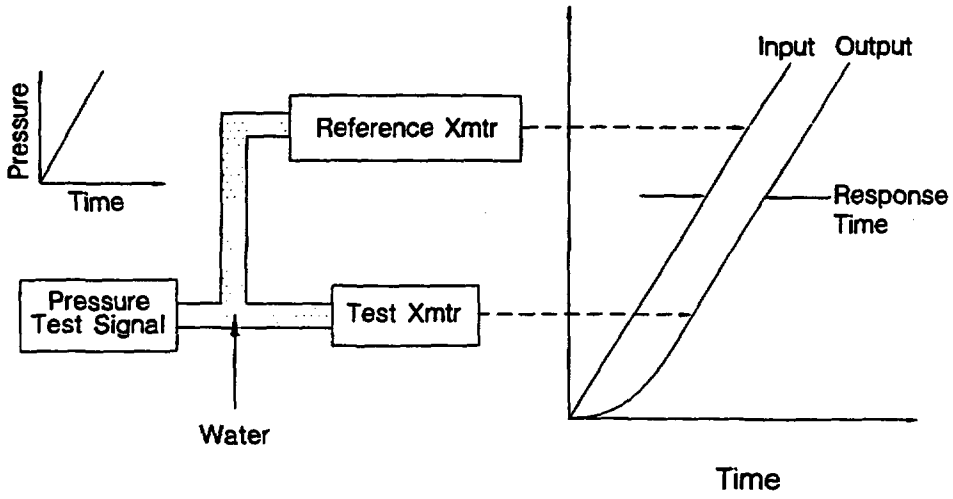

Figure 2. Principle of the Ramp Test Method

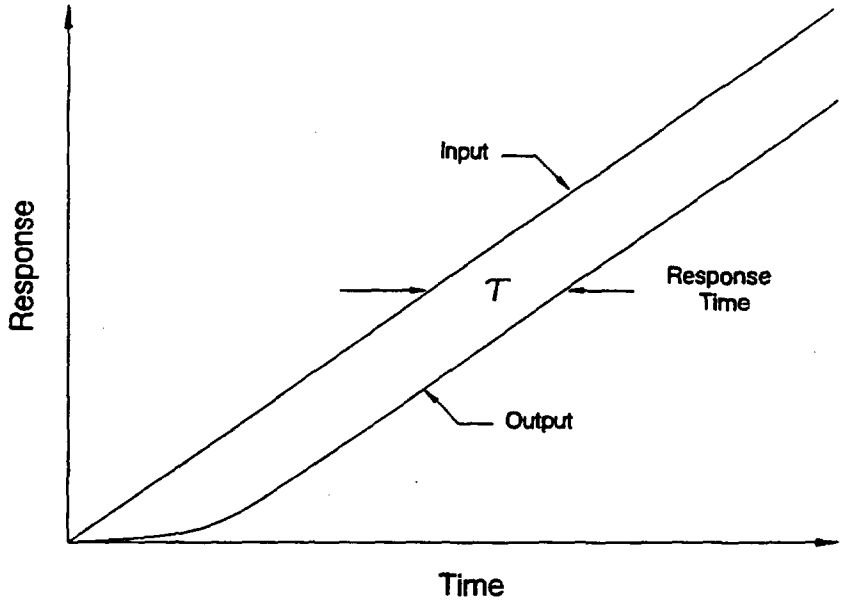

Figure 3. Determination of Response Time From a Ramp Test

This response time value is often referred to as the asympototic ramp time delay. In practice, however, the response time of a pressure transmitter is usually defined as the time delay between the response of the reference transmitter and the test transmitter as they pass through a setpoint. This response time should have the same value as the response time shown in Figure 3, provided that the transmitter is linear and has a non-oscillatory response.

For step tests, the response time is determined in either of two ways: 1) the time that it takes for the transmitter to pass through a setpoint, in which case the response time is referred to as "time-to-trip", or 2) the time that is required for the sensor output to reach 63.2 percent of its final steady state value. The latter definition results in a time constant which corresponds to the response time of a first order system, and is used in defining the step response of pressure transmitters, even though pressure transmitters are not necessarily first order.

4.2 On-Line Methods

Two methods have been developed and validated for in-situ response time testing of pressure transmitters as installed in operating processes. These methods are referred to as noise analysis and the Power Interrupt (PI) test. The noise analysis method can be used for response time testing of most pressure transmitters, but the PI test is applicable only to force-balance pressure transmitters. Force-balance pressure transmitters are also testable by the noise analysis method, but the PI test is more often used than noise analysis, because the PI test involves a simpler procedure and usually takes less time to perform than noise analysis, especially if noise analysis is performed on only one transmitter at a time.

The noise analysis method is based on monitoring the natural fluctuations that exist at the output of pressure transmitters while the plant is operating (Figure 4). These fluctuations (noise)

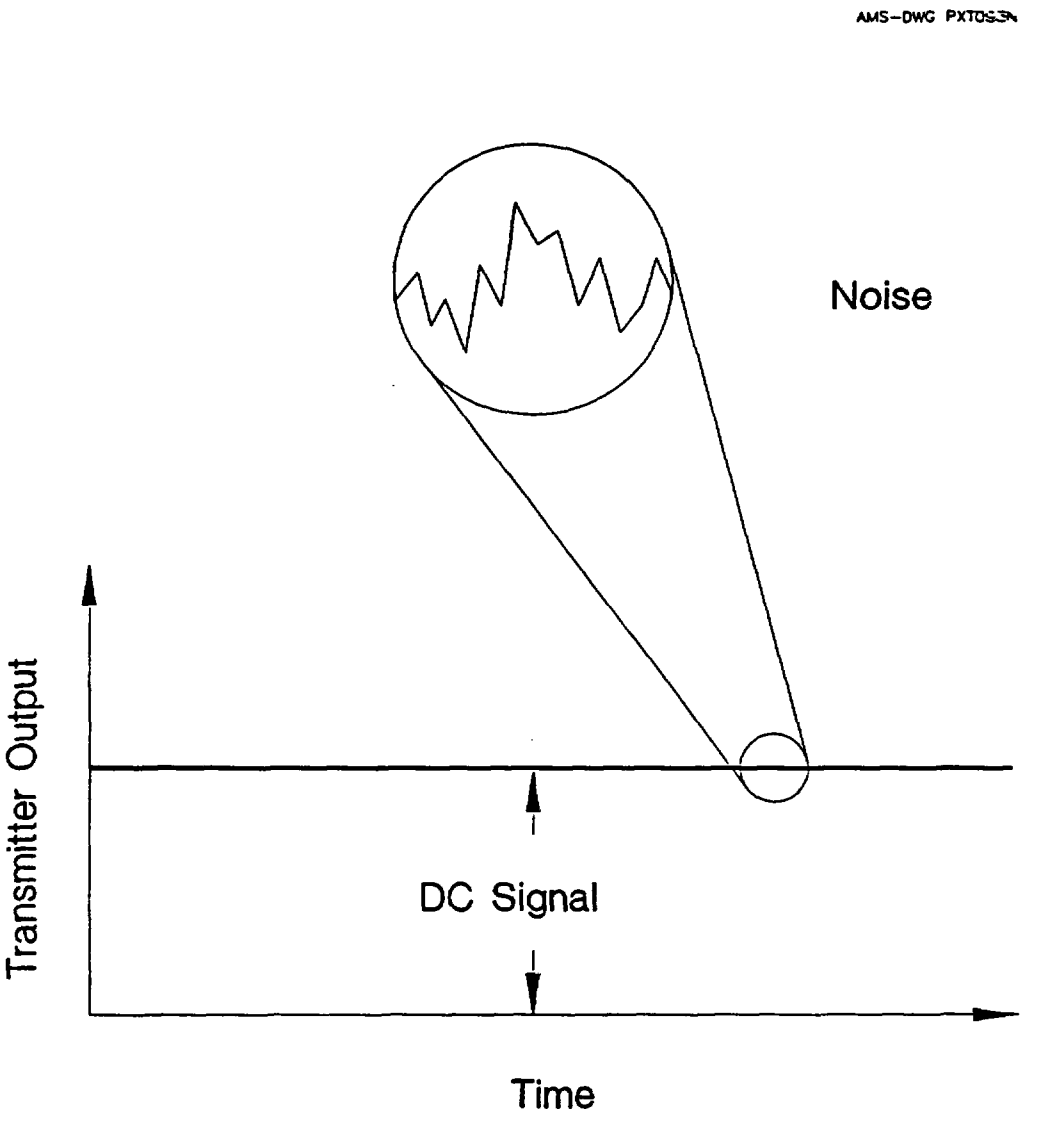

Figure 4. Illustration of Noise on the DC Output of a Pressure Transmitter

are usually due to turbulence induced by the flow of water in the system, random heat transfer in the core, and other naturally occurring phenomena. The noise is extracted from the transmitter output by removing the DC component of the signal, and amplifying the AC component. The DC component is removed by passing the sensor output through a high-pass filter or by offset of the DC bias of the signal. This leaves the AC component which is passed through a low-pass filter for anti-aliasing and removal of high frequency electrical noise. The signal is then digitized by an analog-to-digital converter and stored on computer disks for subsequent analysis. Figure 5 illustrates a block diagram of the noise data acquisition equipment and Figure 6 shows the equipment setup for in-plant testing of pressure transmitters.

The analysis of noise data is performed in the frequency domain and/or time domain, and is based on the assumption that the dynamic characteristics of the transmitter are linear. Frequency domain and time domain analyses are two independent methods for response time determination of transmitters and it is usually helpful to analyze the data with both methods and average the results.

In frequency domain analysis, the power spectral density (PSD) of the noise signal is obtained through a Fast Fourier Transform (FFT) algorithm. An appropriate mathematical function is then fit to the PSD from which the response time of the transmitter is calculated.

The PSDs of nuclear plant pressure transmitters have various shapes depending on the plant, transmitter installation and service, process conditions and other effects. Figure 7 shows examples of typical nuclear plant PSDs for steam generator level, reactor water clean up flow, and pressurizer pressure transmitters.

AMS-DWG PXT0930

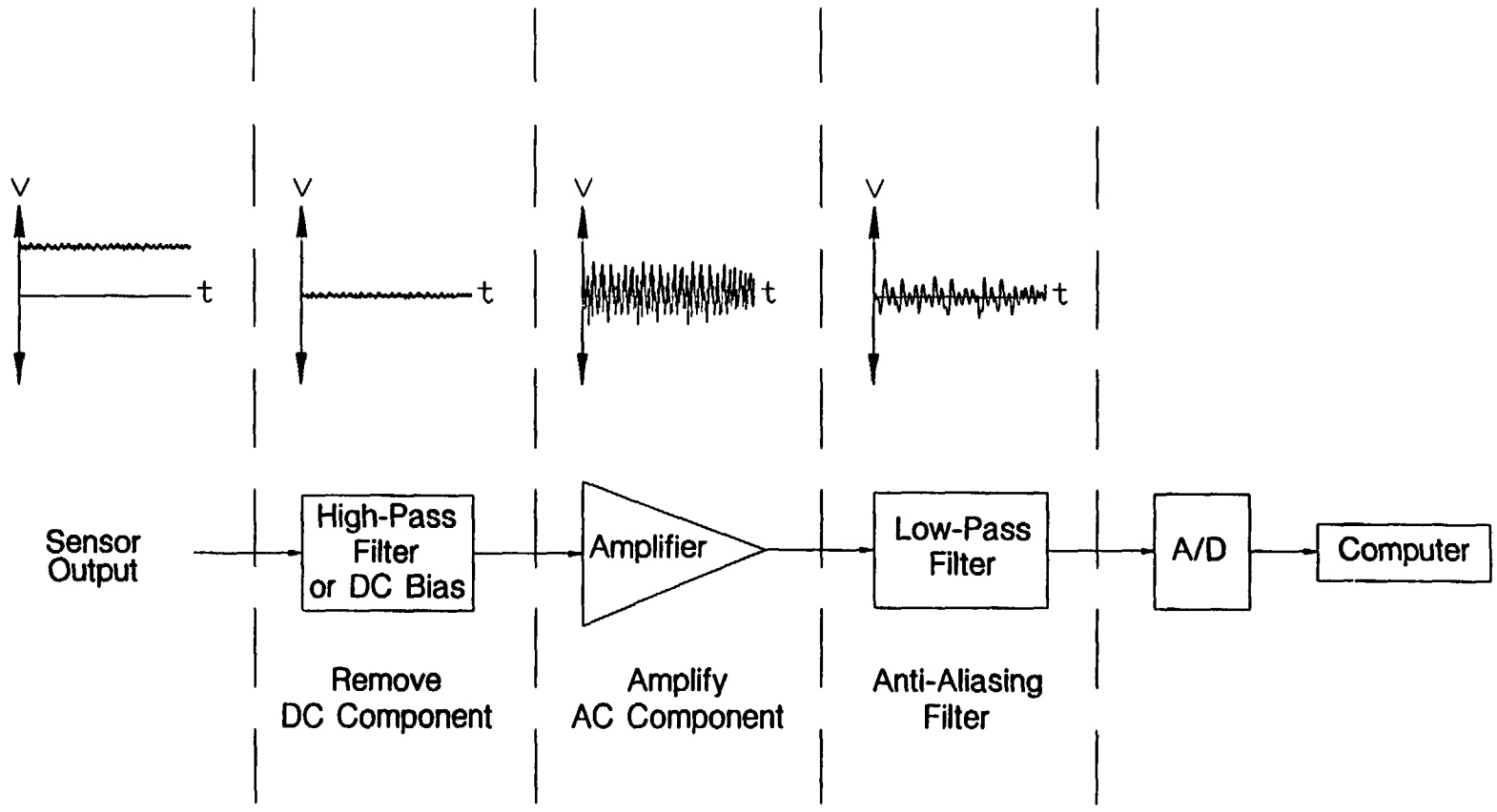

Figure 5. Block Diagram of the Noise Data Acquisition Equipment

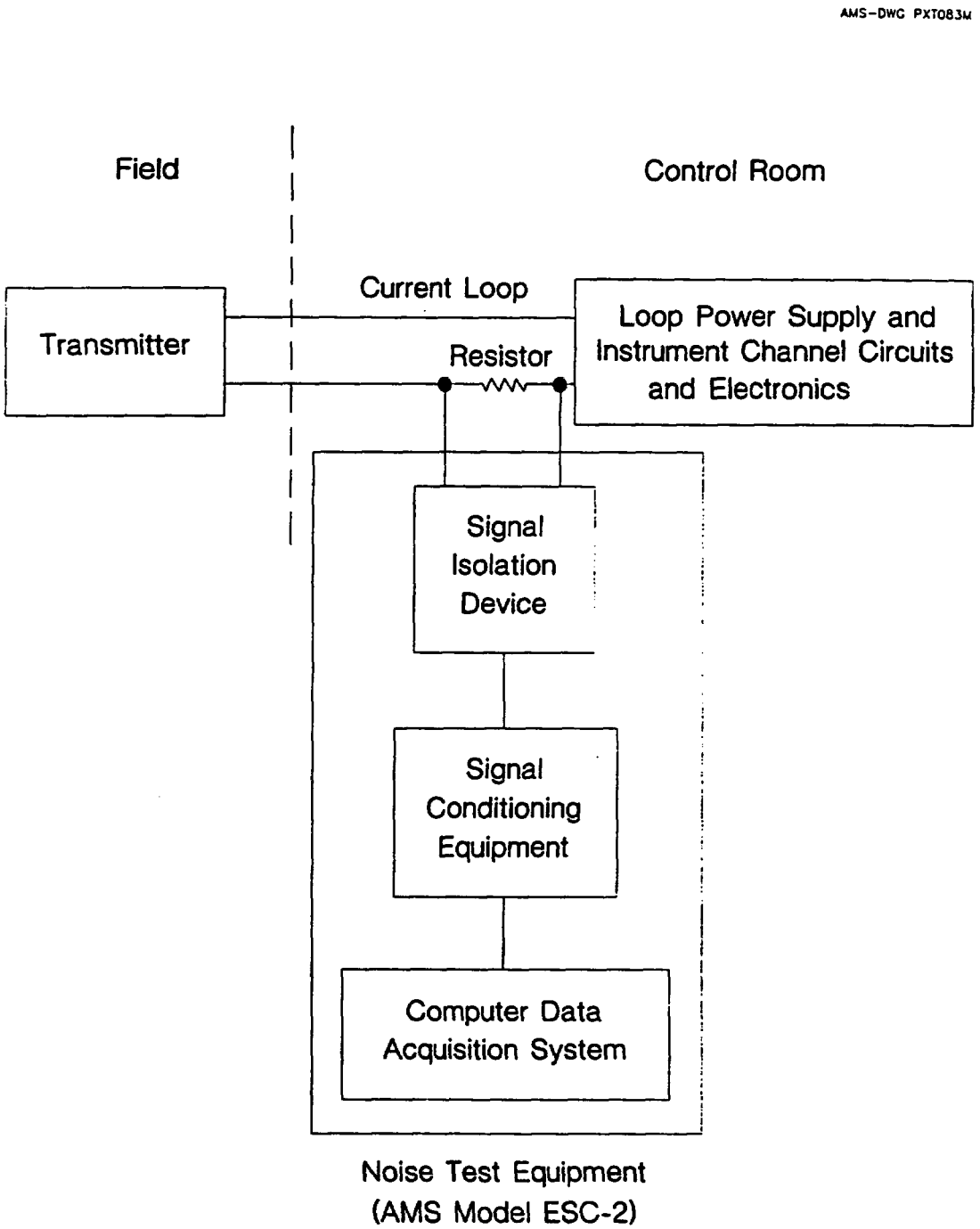

Figure 6. Equipment Set-Up for In-Plant Testing of Pressure Transmitters

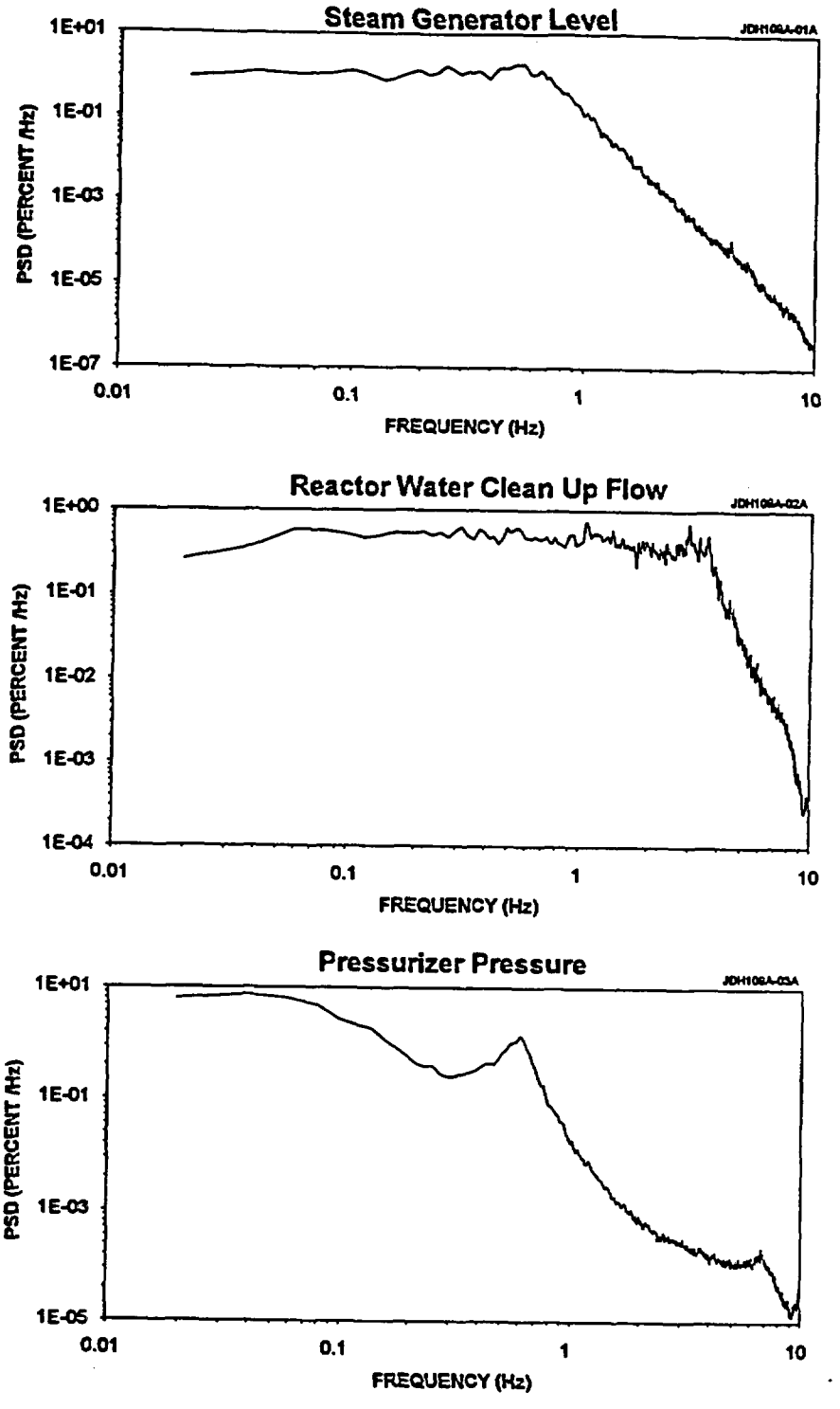

Figure 7. Examples of Typical PSDs for Pressure Transmitters

In time domain analysis, the autoregressive (AR) method is used in which the noise data are fit to a general autoregressive model of order N to identify the coefficients of the model. These coefficients are then used to obtain such dynamic descriptors as the impulse response, step response and ramp response of the transmitters from which the response time is deduced.

The in-plant noise tests are often repeated for three sampling frequencies (e.g., 30 Hz, 200 Hz, and 2000 Hz) to cover the entire frequency spectrum over which the sensor response time may lie. The data for each of the three frequencies are analyzed separately, the outliers are rejected, and the remaining results are averaged to provide a single frequency domain and time domain result for each transmitter. These two results are then averaged together to yield the response time of the transmitter. In some cases, either the frequency domain or the time domain results may be unsuitable. In this case, only the suitable time domain or frequency domain result is reported as the response time of the transmitter.

The validity of the noise analysis technique has been examined by laboratory testing of representative transmitters from Barton, Fischer & Porter, Foxboro, Rosemount, Schlumberger (Bailey), Statham/Gould, Veritrak/Tobar, and other transmitters of the types used in nuclear power plants. Based on the results of the laboratory validation tests, the noise analysis method has been found to be generally successful in providing the response times of transmitters to within ± 0.10 seconds of the results that are obtained by the conventional response time tests.

For in-plant tests, experience has shown that the noise analysis method generally provides conservative response time results, provided that the dynamic characteristics of the transmitter are predominately linear, and the transmitter is driven by wideband noise with suitable spectral characteristics. In some situations, the bandwidth of the process noise that drives the transmitters

may be much smaller than the frequency response of the transmitter. In these situations, the noise output of the transmitter would be dominated by the process bandwidth and would therefore result in an excessively conservative response time value for the transmitter.

Prior to any time domain or frequency domain analysis, the suitability of the noise data must be examined by computer scanning and screening of the raw data to ensure a reliable analysis. This is accomplished by using data qualification algorithms that checks for the stationarity and linearity of the data. This includes plotting the amplitude probability density (APD) of the data for visual inspection of skewness and nonlinearity as well as calculating the skewness, flatness, or other descriptors of noise data to ensure that the data has a normal distribution and does not contain any undesirable characteristics. Figure 8 illustrates two APDs for a normal and a skewed noise signal. A large skewness is an indication of nonlinearity of the transmitter or the noise data.

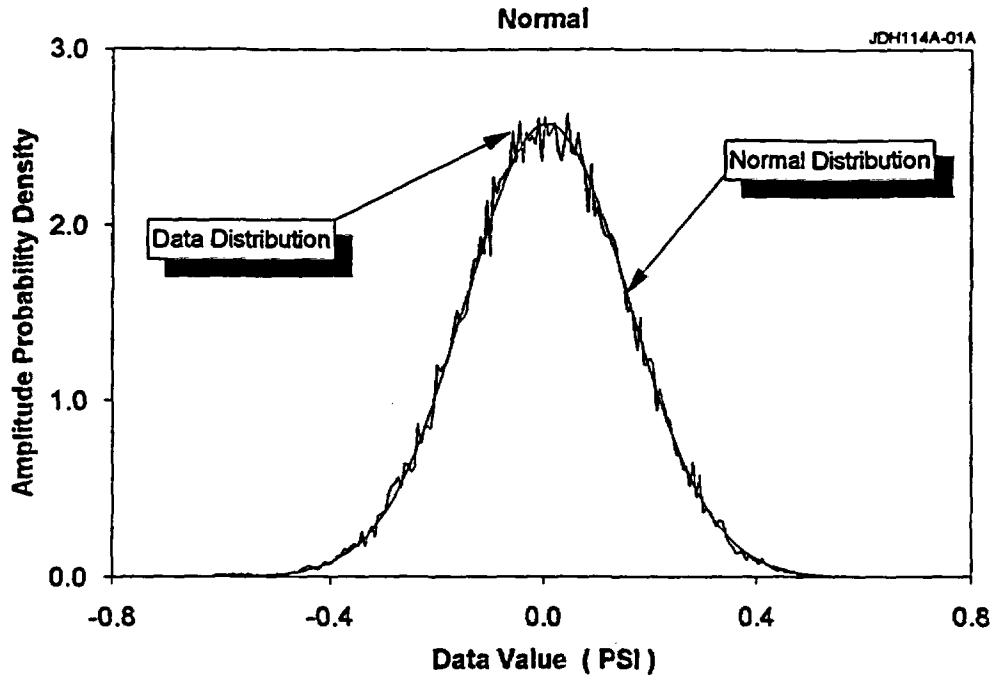

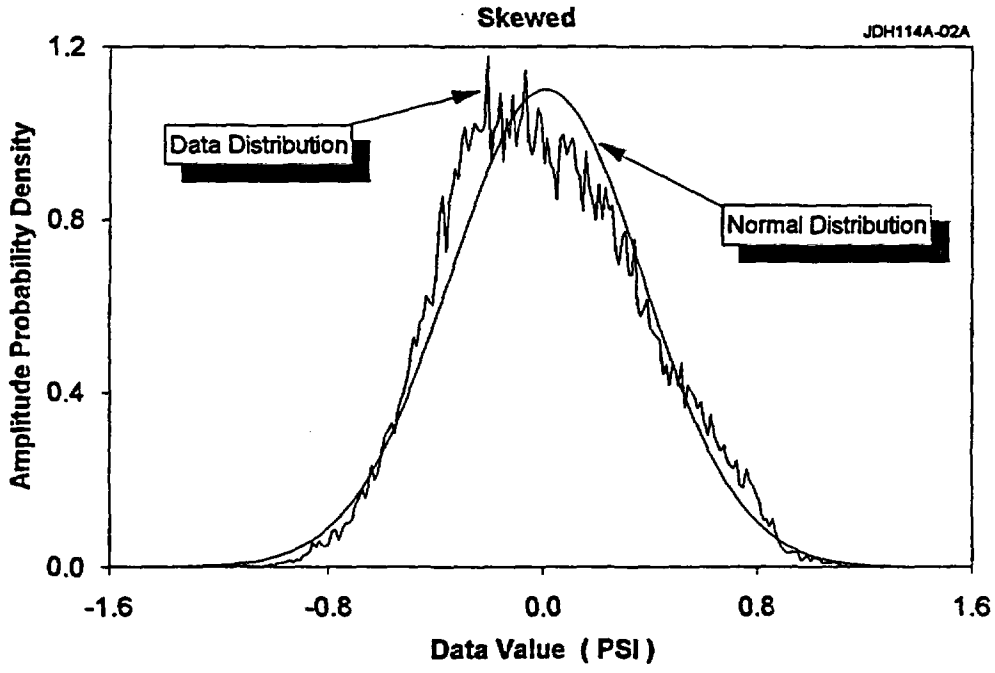

Figure 8. Normal and Skewed Noise Signal APDs

5. DESCRIPTION OF THE IN-PLANT TESTS

The in-plant tests reported here involved two separate activities; on-site data acquisition, and off-site data analysis. These activities are described below.

5.1 On-Site Data Acquisition

This work was performed by a crew of two AMS personnel who were sent to the plant to perform the tests and record the data. The AC output of each transmitter was recorded for approximately one hour while the plant was operating. The signals were accessed from the control room area where the transmitter field leads reached the signal conditioning equipment in the plant instrument cabinets. The AMS Model ESC-2 instrument along with a computerized data acquisition system was used for signal conditioning, sampling, and storage of the data. For each transmitter, three data sets were sampled at the following frequencies: 30, 200 and 2000 Hz. Each data set consisted of 50 to 100 blocks with 1024 samples per block. These were stored on computer disks for subsequent off-site analysis at AMS as described below.

The data acquisition parameters were recorded on a single data sheet for each transmitter. A blank data sheet is shown in Figure 9. The completed data sheets for all the transmitters tested are given in Appendix A of this report.

5.2 Off-Site Data Analysis

The in-plant data as stored on computer disks were analyzed at AMS. First, each data set was screened by our data qualification software to remove any portion of the data that might have

ANALYSIS AND MEASUREMENT SERVICES CORPORATION TEST PROCEDURE
NOISE ANALYSIS DATA SHEET

Date _____ Time _____

1. Plant Name _____ Unit # _____

Sensor Tag # _____ S/N (if avail.) _____

Sensor Mfg. and Model # (if avail.) _____

Sensor Service/Location _____

2. Test Conditions: Plant Power Level _____

Sensor Indication (Pressure, Flow, Level, Etc.) _____

Measured DC value _____

3. Sensor Calibration: _____

4. Data Recording: Computer Disk ID Number(s) _____ A/D Channel _____

5. Are There Any Snubbers or Dampening Devices In The Signal Path? _____

(If yes, explain) _____

Data Acquisition Settings

Filename	Samp. Rate (Hz)	# Blocks	# Samp. Blocks	HP Filter or Offset (HZ)or(VDC)	HP Gain	Amp. Gain	LP (Hz)	LP Gain

6. Remarks: _____

_____

_____
Signature

Figure 9. Data Sheet for Noise Data Acquisition for Response Time Testing of a Pressure Transmitter

been contaminated with undesirable effects such as spikes, sudden shifts, nonlinearity, or saturated blocks. An APD plot and the skewness value for each transmitter were generated and examined as a part of the data qualification effort. An important benefit of the APD plot and skewness value is that they help identify gross nonlinearities in the transmitters or the data. Appendix B of this report contains a separate APD for each transmitter tested.

Following data qualification, each data set was individually analyzed in both the time and frequency domains and the results were averaged, after removing any outliers, to arrive at a final response time value for each transmitter tested. A letter report was then written and submitted to the customer giving a table of response time values for all the transmitters tested.

6. FINAL RESULTS

The final results of the response time tests are listed in Table 1, and the supporting data are provided in the Appendices of this report. The results in Table 1 are the same as those reported to the plant in an AMS letter-report submitted earlier. The accuracy of these results is ± 0.10 seconds of the values reported.

In addition to the test data sheets in Appendix A and APD plots in Appendix B, the supporting data for the results given in this report includes the PSDs of the noise signals for each transmitter which are given in Appendix C. These PSDs were visually examined and compared with any available PSD for the same type of transmitter(s) from previous tests. The purpose of this effort was to determine any major differences in the PSDs and to verify that each PSD was normal and suitable for providing a reliable response time result. A mathematical function was then fit to the PSD from which the response time of the transmitter was determined and averaged with corresponding time domain results to provide a final response time value.

7. QUALITY ASSURANCE

The work reported herein was performed in accordance with the applicable requirements of the AMS Quality Assurance program and any customer requirements for Quality Assurance that were specified in the purchase order for this work. The tests and data analysis associated with this work were performed by qualified AMS personnel using approved procedures and equipment with valid calibration traceable to the National Institute of Standards and Technology (NIST).

Pertinent Quality Assurance documentation, including a listing of the test equipment used in the in-plant tests and their calibration status, is given in Appendix D.