Entergy

Entergy Operations, Inc.
1340 Echelon Parkway
Jackson, MS 39213-8298
Tel 601 368 5758

Michael A. Krupa
Director
Nuclear Safety & Licensing

CNRO-2003-00033

August 27, 2003

U. S. Nuclear Regulatory Commission
Attn: Document Control Desk
Washington, DC 20555

SUBJECT: Entergy Operations, Inc.
Relaxation Request to NRC Order EA-03-009

Arkansas Nuclear One, Unit 2
Docket No. 50-368
License No. NPF-6

REFERENCE: Entergy Operations, Inc. letter CNRO-2003-00020 to the NRC, "Relaxation Requests to NRC Order EA 03-009," dated June 11, 2003

Dear Sir or Madam:

In the referenced letter, Entergy Operations, Inc. (Entergy) requested relaxation from Section IV.C(1)(b) of NRC Order EA 03-009 for Arkansas Nuclear One, Unit 2 (ANO-2) and Waterford Steam Electric Station, Unit 3 (Waterford 3). Specifically, the bottom of the ANO-2 and Waterford 3 control element drive mechanism (CEDM) nozzles contain threads that cannot be effectively examined in accordance with Section IV.C(1)(b). The requests proposed an alternative based on stress and fracture mechanics analyses.

In a meeting held on August 14, 2003, representatives of the NRC staff and Entergy discussed these requests. As a result of this meeting, Entergy is superceding its previous ANO-2 relaxation request with Enclosure 1. Enclosure 2 contains a copy of the fracture mechanics analysis report (Engineering Report M-EP-2003-002, Rev. 1) that supports the request. A similar request for Waterford 3 will be submitted under separate letter.

Enclosure 3 contains Dominion Engineering, Inc. letter L-4162-00-1, "Material Properties and Modeling Methods Used in ANO Unit 2 Welding Residual Stress Analysis," which contains information pertaining to material properties and analytical methods used in performing the welding residual stress analyses described in Engineering Report M-EP-2003-002, Rev, 1.

A101

Information contained in Enclosure 3 is owned by Dominion Engineering and is considered by Dominion to be proprietary and confidential in accordance with 10 CFR 2.790(a)(4) and 10 CFR 9.17(a)(4). As such, Dominion requests this information be withheld from public disclosure. The affidavit supporting this request is provided in Enclosure 4. Dominion has informed Entergy that the vast majority of Enclosure 3 is considered proprietary; therefore, Dominion considers it impractical to provide a non-proprietary version.

This letter contains commitments as identified in Enclosure 5.

If you have any questions or require additional information, please contact Guy Davant at (601) 368-5756.

Sincerely,

for

MAK/GHD/bal

Enclosures:
1. Relaxation Request for Arkansas Nuclear One, Unit 2
2. Engineering Report M-EP-2003-002, Rev. 1
3. Proprietary Information – Dominion Engineering, Inc. Letter L-4162-00-1, "Material Properties and Modeling Methods Used in ANO Unit 2 Welding Residual Stress Analysis"
4. Affidavit for Withholding Information from Public Disclosure
5. Licensee-Identified Commitments

cc: Mr. C. G. Anderson (ANO)
Mr. W. A. Eaton (ECH)
Mr. G. A. Williams (ECH)

Mr. T. W. Alexion, NRR Project Manager (ANO-2)
Mr. R. L. Bywater, NRC Senior Resident Inspector (ANO)
Mr. T. P. Gwynn, NRC Region IV Regional Administrator

ENCLOSURE 1

CNRO-2003-00033

ARKANSAS NUCLEAR ONE, UNIT 2
RELAXATION REQUEST #1

ENTERGY OPERATIONS, INC.
ARKANSAS NUCLEAR ONE, UNIT 2

RELAXATION REQUEST #1 TO NRC ORDER EA 03-009

TABLE OF CONTENTS

SECTION	TITLE	PAGE
I.	**ASME COMPONENTS AFFECTED**	3
II.	**NRC ORDER EA 03-009 APPLICABLE EXAMINATION REQUIREMENTS**	3
III.	**REASON FOR REQUEST**	4
A.	Nozzle Configuration Limitation	4
B.	Inspection Probe Design Limitation	5
C.	Impracticality of Performing Alternative Surface Examinations	6
IV.	**PROPOSED ALTERNATIVE AND BASIS FOR USE**	7
A.	Proposed Alternative	7
1.	UT Examination	7
2.	Analysis	7
3.	Augmented Inspection	7
4.	Augmented Inspection Sampling Program	8
B.	Basis for Use	9
1.	UT Examination	9
2.	Analysis	9
3.	Augmented Inspection	13
4.	Augmented Inspection Sampling Program	14
V.	**CONCLUSION**	15

SECTION	TITLE	PAGE
TABLES		
1.	Evaluation of CEDM Nozzles for Augmented Inspection	16
2.	Industry History of Known Cracking for Heats of Alloy 600 Material Used in ANO-2 CEDM Nozzles	20
3.	Results of Crack Growth Analysis	21
4.	CEDM Nozzles Augmented Inspection	22
5.	Augmented Surface Examination	25
FIGURES		
1.	Typical CEDM Nozzle Details	26
2.	Typical UT Inspection Probe Detail	27
3.	Detail of CEDM Nozzle Crack Growth Analysis	28
4.	Penetration Locations in the ANO-2 RPV Head	29

ENTERGY OPERATIONS, INC.
ARKANSAS NUCLEAR ONE, UNIT 2

RELAXATION REQUEST #1 TO NRC ORDER EA 03-009

Hardship or Unusual Difficulty without a Compensating Increase in the Level of Quality or Safety

I. ASME COMPONENTS AFFECTED

Arkansas Nuclear One, Unit 2 (ANO-2) has ninety (90) ASME Class 1 reactor pressure vessel (RPV) head penetration nozzles comprised of eighty-one (81) Control Element Drive Mechanism (CEDM) nozzles, eight (8) Incore Instrument (ICI) nozzles, and one (1) vent line nozzle. This request pertains to the CEDM nozzles only.

In accordance with Section IV.A of NRC Order EA-03-009, the ANO-2 susceptibility category is "high" based on a calculated value of 12.4 effective degradation years (EDY) at the beginning of the upcoming fall refueling outage.

II. NRC ORDER EA 03-009 APPLICABLE EXAMINATION REQUIREMENTS

The NRC issued Order EA-03-009 (the Order) that modified the current licenses at nuclear facilities utilizing pressurized water reactors (PWRs), which includes ANO-2. The NRC Order establishes inspection requirements for RPV head penetration nozzles. ANO-2 is categorized as a "high" susceptibility plant based on an EDY value greater than 12.

Section IV.C of the Order states in part:

"All Licensees shall perform inspections of the RPV head using the following techniques and frequencies:

(1) For those plants in the High category, RPV head and head penetration nozzle inspections shall be performed using the following techniques every refueling outage.

(a) Bare metal visual examination of 100% of the RPV head surface (including 360° around each RPV head penetration nozzle), AND

(b) Either:

(i) Ultrasonic testing of each RPV head penetration nozzle (i.e., nozzle base material) from two (2) inches above the J-groove weld to the bottom of the nozzle and an assessment to determine if leakage has occurred into the interference fit zone, OR

(ii) Eddy current testing or dye penetrant testing of the wetted surface of each J-groove weld and RPV head penetration nozzle base material to at least two (2) inches above the J-groove weld."

III. REASON FOR REQUEST

Section IV.F of the Order states:

"Licensees proposing to deviate from the requirements of this Order shall seek relaxation of this Order pursuant to the procedure specified below. The Director, Office of Nuclear Reactor Regulation, may, in writing, relax or rescind any of the above conditions upon demonstration by the Licensee of good cause. A request for relaxation regarding inspection of specific nozzles shall also address the following criteria:

(1) The proposed alternative(s) for inspection of specific nozzles will provide an acceptable level of quality and safety, or

(2) Compliance with this Order for specific nozzles would result in hardship or unusual difficulty without a compensating increase in the level of quality and safety.

"Requests for relaxation associated with specific penetration nozzles will be evaluated by the NRC staff using its procedure for evaluating proposed alternatives to the ASME Code in accordance with 10 CFR 50.55a(a)(3)."

Pursuant to Section IV.F(2) of the Order, Entergy Operations, Inc. (Entergy) requests relaxation from the requirements of Section IV.C(1)(b). Entergy plans to inspect RPV head CEDM penetration nozzles at ANO-2 using the ultrasonic testing (UT) method in accordance with Section IV.C(1)(b)(i) of the Order to the maximum extent possible. However, a UT inspection of the inside diameter (ID) of the CEDM nozzles at ANO-2 can only be performed from 2 inches above the J-groove weld down to a point approximately 1.544 inches above the bottom of the nozzle. This 1.544-inch "blind zone" is due to limitations resulting from CEDM nozzle configuration (1.344 inches) and inspection probe design (0.200 inch). These limitations and their associated hardships are discussed below.

A. Nozzle Configuration Limitation

1. Description

Guide cones are attached to the bottoms of the ANO-2 CEDM nozzles via threaded connections. Specifically, the guide cone screws into the end of the CEDM nozzle with a welded set screw and two tack welds at the cone-nozzle interface to secure the guide cone to the nozzle. The length of the threaded connection region is 1.25 inches. Additionally, a 45° chamfer exists immediately above the threaded connection region. The length of the chamfer region is 0.094 inch. (See Figure 1 for typical nozzle details.)

Due to the threaded connection and chamfer region at the bottom of each CEDM nozzle, a meaningful UT examination in that area cannot be performed. Specifically, the chamfer region geometry causes sporadic signals while, once the guide cone is reached, sound cannot pass into the CEDM nozzle base material because of the gap that exists between the guide cone and the nozzle at the threaded connection. Therefore, UT of the bottom 1.344 inches (1.25 + 0.094) of the CEDM nozzles is not possible.

2. Hardship

Resolving the UT limitations due to nozzle configuration would require eliminating the existing CEDM nozzle-to-guide cone threaded connection and chamfer region and redesigning and physically modifying the nozzle ends to provide for an acceptable UT examination. Entergy believes to take such an approach would impose hardships and unusual difficulties without a compensating increase in the level of quality and safety for the following reasons:

a) High Personnel Dose

As mentioned above, a guide cone is attached to the bottom of each CEDM nozzle via a threaded connection. Entergy has estimated that removing and reinstalling the 81 guide cones would result in personnel exposure of approximately 1.25 man-REM per nozzle for a total exposure of 101.25 man-REM.

b) Removing, Redesigning, and Reinstalling Guide Cones

The guide cones would be removed by cutting them off at the top of the nozzle threaded region, which would result in a shorter nozzle below the J-groove weld. As a result, the blind zone would be relocated closer to the weld reducing the length of nozzle below the J-groove weld that could be inspected via UT in future inspections.

The replacement guide cone is of a welded socket design that fits over the end of the nozzle and is welded to the nozzle tube. To reinstall the cones would require a modification to the nozzle ends as well as fabrication of new cones. Having to remove the cones and replace them with new components results in additional modifications to the RPV head that go beyond the requirements and scope of the Order. In addition, installing the new guide cone would cause high residual stresses in the heat affected zone of the weld, which would increase the probability of primary water stress corrosion cracking (PWSCC).

c) Impact on Outage Schedule

Entergy estimates that to remove and reinstall each guide cone would require approximately eight (8) hours per nozzle adding as much as 27 days to the outage schedule.

B. Inspection Probe Design Limitation

1. Description

The inspection probe to be used to inspect ANO-2 CEDM nozzles consists of seven (7) individual transducers, as shown in Figure 2. Various probe configurations will be utilized to perform the UT and eddy current testing (ECT) inspections [e.g., UT time-of-flight diffraction (TOFD) and standard 0° scans and low frequency ECT.]

The inspection probe is designed so that the ultrasonic transducers are slightly recessed into the probe holder. This recess must be filled with water to provide coupling between the transducer and the nozzle wall. Because of this design, the complete diameter of the transducer must fully contact the inspection surface before ultrasonic information can be collected. Because UT probes 1 and 2 have a diameter of 0.250 inch, these transducers should, in theory, be able to collect meaningful UT data down to a point approximately 0.125 inch (1/2 diameter) above the chamfer. However, based on prior UT inspection experience and a review of UT data from previous inspections, the circumferential-shooting TOFD transducer pair only collects meaningful data down to a point 0.200 inch above the chamfer. Below this point, UT data cannot be collected.

2. Hardship

Entergy knows of no UT equipment currently available that resolves the blind zone limitation; therefore, new UT equipment would have to be developed and appropriately qualified. The time and resources required to develop this equipment is unknown.

Entergy also evaluated the feasibility of inspecting the blind zone of each CEDM nozzle using either the liquid penetrant testing (PT) method or the ECT method as specified in Section IV.C(1)(b)(ii) of the Order. Entergy found these techniques to be impractical, as discussed below.

C. Impracticality of Performing Alternative Surface Examinations

To perform a PT inspection, the guide cones would have to be removed from and reinstalled on the CEDM nozzles before and after performing the PT examinations. Performing these operations would result in a significant increase in personnel radiation exposure. Entergy estimates that the radiation exposure associated with removing the guide cone, performing the PT inspection, and reinstalling the guide cone to be approximately 2.5 man-REM per nozzle for a total exposure of 202.5 man-REM. In addition, this option would also involve those hardships described in Sections III.A.2.a) and b), above.

As with the UT inspection, the bottom 1.344 inches (threaded connection and chamfer region) cannot be inspected using ECT.

In conclusion, CEDM nozzles can be volumetrically inspected in accordance with Section IV.C(1)(b)(i) of the Order from 2 inches above the J-groove weld to the top of the blind zone (approximately 1.544 inches above the bottom of the nozzle). Below this point, Entergy believes that the hardships associated with inspection activities required by the Order as discussed above are not commensurate with the level of increased safety or reduction in probability of leakage that would be obtained by complying with the Order.

IV. PROPOSED ALTERNATIVE AND BASIS FOR USE

Paragraph IV.C(1)(b)(i) of the Order requires that the UT inspection of each RPV head penetration nozzle encompass "from two (2) inches above the J-groove weld to the bottom of the nozzle." Due to the reasons stated above, Entergy requests relaxation from this requirement for ANO-2 CEDM nozzles and proposes a three-step alternative, which involves the use of UT examination, analysis, and surface examination techniques, as described below.

A. Proposed Alternative

1. UT Examination

The ID of each CEDM nozzle (i.e., nozzle base material) shall be ultrasonically examined from two (2) inches above the J-groove weld to 1.544 inches above the bottom of the nozzle. In addition, an assessment to determine if leakage has occurred into the interference fit zone will be performed, as currently specified in Section IV.C(1)(b)(i) of the Order.

2. Analysis

For the blind zone portions of the CEDM nozzle not examined by UT as required by the Order, analysis is performed to:

a) Determine if sufficient free-span exists between the blind zone and the weld to facilitate one (1) operating cycle of crack growth without the crack reaching the weld, and

b) For nozzles or portions of nozzles not meeting item 2.a), above, determine how much propagation length is required to facilitate one cycle of crack growth without the crack reaching the weld. This localized area is defined in Table 5 and subject to augmented inspection as described in item 3 below.

The analysis is discussed in further detail in Section IV.B.2 below and is fully documented in Engineering Report M-EP-2003-002, Rev. 1 (Enclosure 2). The analysis is based on design information and actual UT data obtained during the previous refueling outage.

3. Augmented Inspection

Nozzles that are demonstrated by analysis to have inadequate free-span to facilitate crack growth are candidates for augmented inspection. The augmented inspection consists of either ECT or PT, or a combination of both techniques. The augmented inspection of the outside diameter (OD) is performed on that portion of the nozzle that has been determined by analysis as necessary to prevent a crack from reaching the J-groove weld in less than one operating cycle. A conservatively selected sample of the candidate CEDM nozzles is subjected to the augmented inspection. Additional details regarding the sample selection is provided below.

4. Augmented Inspection Sampling Selection

Table 1 lists all 81 CEDM nozzles including the information used to select the subset of nozzles to receive augmented inspection. Of the 81 nozzles, six (6) are excluded based on analysis results while 75 are candidates for augmented inspection. For reasons discussed in Sections IV.B.2 and IV.B.3 below, the 75 nozzles have been further evaluated to identify an appropriate population to be examined by augmented inspection.

From the remaining 75 candidate nozzles, 17 have been selected for augmented inspection based on:

a) CEDM nozzles are segregated into their analyzed groups as bounded by the fracture mechanics evaluation. Within each analyzed group, a targeted 20% of the nozzles (rounded to the nearest nozzle) are selected for augmented inspection as shown in the table below:

Analyzed CEDM Nozzle Location (Head Angle)	Analyzed Group of CEDM Nozzle (Locations Bounded by Analysis)	Number of Nozzles Subject to Augmented Inspection	Number of Nozzles Selected for Augmented Inspection
0°	0°	1 of 1	1
8.8°	8.8°,	4 of 4	1
28.8°	12.4°, 17.7°, 19.9°, 25.5°, 27.2°, 28.8°	27 of 32	6
49.6°	33.3°, 37.6°, 38.9°, 40.3°, 43.0°, 49.6°	43 of 44	9

b) To obtain the required number of nozzles for augmented inspection as defined above, the following criteria is used in the selection process to target those nozzles most susceptible to PWSCC:

(i) Each CEDM nozzle heat number is evaluated to determine whether there is any industry history of PWSCC. For those heats with a history of PWSCC, candidate nozzles of that heat are included in the augmented inspection plan. See Table 2 for a list of nozzle heats.

(ii) The remaining candidate nozzles are selected based on their yield strength. Nozzles from heats with higher yield strengths are selected for inspection prior to nozzles with lower yield strengths. A value of 37 ksi is the lowest yield strength material that is known to have cracked. Therefore, nozzles from heats with yields strengths greater than 37 ksi will be selected prior to those that have yield strengths less than 37 ksi.

c) If PWSCC is identified in CEDM nozzles while performing the UT inspection in accordance with the Order, then augmented inspections of those nozzles will also be performed. The augmented inspections performed to comply with this paragraph will not affect the sample group selected for augmented inspection under paragraph b), above.

d) If PWSCC cracks are identified during the performance of the augmented inspections, then all CEDM nozzles are added to the augmented inspection scope.

B. Basis for Use

The UT examination is the volumetric technique recognized in Section IV.C(1)(b)(i) of the Order. The Entergy proposed alternative includes the use of UT to the maximum extent practical based on the limits of current technology. However, because the technology cannot provide an inspection to the extent required by the Order (i.e., to the bottom of the nozzle), Entergy proposes supplemental analysis and augmented inspection. This approach provides a level of safety and quality commensurate with the intent of the Order. Each portion of the proposed alternative is discussed below.

1. UT Examination

UT inspection of CEDM nozzles will be performed using a combination of TOFD and standard 0° pulse-echo techniques. The TOFD approach utilizes two pairs of 0.250-inch diameter, 55° refracted-longitudinal wave transducers aimed at each other. One of the transducers sends sound into the inspection volume while the other receives the reflected and diffracted signals as they interact with the material. There will be one TOFD pair looking in the axial direction of the penetration nozzle tube and one TOFD pair looking in the circumferential direction of the tube. The TOFD technique is primarily used to detect and characterize planar-type defects within the full volume of the tube.

The standard 0° pulse-echo ultrasonic approach utilizes one 0.250-inch diameter straight beam transducer. The 0° technique is used to:

- Plot the penetration nozzle OD location and J-groove weld location,
- Locate and size any laminar-type defects that may be encountered, and
- Monitor the back-wall signal response to detect leakage that may occur in the interference regions of the RPV head penetration.

The UT inspection procedures and techniques to be utilized at ANO-2 have been satisfactorily demonstrated under the EPRI Materials Reliability Program (MRP) Inspection Demonstration Program.

2. Analysis

The extent of the proposed alternative is established by an engineering evaluation that includes a finite element stress analysis and fracture mechanics evaluations. The intent of the engineering evaluation is to:

a) Determine whether sufficient crack propagation length exists between the tip of a postulated crack and the weld to facilitate one cycle of crack growth without the crack reaching the weld;

b) Where sufficient available crack propagation length does not exist for a given nozzle, then determine how much additional length into the blind zone is required to provide one cycle of crack growth without compromising the weld. See Figure 3.

Four (4) CEDM nozzle locations have been selected for analysis in the engineering evaluation. The selected locations (RPV head angles) are 0°, 8.8°, 28.8°, and 49.6° with the 0° head angle at the vertical centerline of the RPV head, the 49.6° head angle location being the outermost nozzles, and the other two being intermediate locations between the center and outermost locations. The results of the stress analysis at each location are bounding for nozzles higher on the head (e.g., analysis for 28.8° bounds the intermediate nozzles between 8.8° and 28.8°). The selected nozzle head angle locations provide an adequate representation of residual stress profiles and a proper basis for analysis to bound all CEDM nozzles.

Based on these analyses, each nozzle is evaluated to determine whether the *available propagation length* as defined by UT data obtained during the Spring 2002 refueling outage UT is adequate to prevent crack propagation into the weld in less than one cycle of operation. For those nozzles that do not have adequate available propagation length, additional analysis is performed to define the nozzle area that is subject to an augmented inspection.

Stress Analysis

A "finite element" based stress analysis is performed on the ANO-2 CEDM nozzles in this evaluation. For conservatism, the yield strength used in the analysis for each nozzle head angle location is the highest yield strength of all the nozzles at that head angle. To ensure that the finite element analysis (FEA) adequately models the as-built configuration of the selected ANO-2 CEDM nozzles and weld, a detailed review of design drawings and UT inspection data from the ANO-2 Spring 2002 refueling outage has been performed. Based on this review, the following is concluded:

- CEDM Nozzles at 0° and 8.8° Head Angle Locations: Weld sizes at each nozzle location are similar to design. However, the as-built nozzle projections below the bottom of the RPV head are shorter than indicated by design. The FEA model has been adjusted for this shorter nozzle projection.

- CEDM Nozzles at 28.8° Head Angle Locations: The leg lengths of the welds on the downhill sides of the nozzles are longer than indicated by design. The leg lengths of the fillet weld reinforcement on the uphill side of the nozzles match the design values. Nozzle projections below the bottom of the RPV head are in accordance with design. The FEA model has been adjusted to account for the longer weld leg lengths on the downhill side of the nozzles.

- CEDM Nozzles at 49.6° Head Angle Locations: The leg lengths of the welds on the downhill sides of the nozzles are longer than indicated by design and extend into the blind zone. The leg lengths of the welds on the uphill side of the nozzles match the design values. Nozzle projections below the bottom of the RPV head are in accordance with design. The FEA model has been adjusted to account for the longer weld leg lengths on the downhill side of the nozzles.

The finite element analysis (FEA) has determined the stress distribution from the bottom of the nozzle to just above the top of the weld at the downhill, uphill, and mid-plane azimuthal locations. The downhill and mid-plane locations have been selected because they represent the shortest distances that a crack would have to propagate to reach the nozzle weld region. The uphill location has been selected for completeness of the analysis. The stress distributions produced by this analysis are used to perform the fracture mechanics evaluations.

Fracture Mechanics Evaluation

Safety analyses performed by the MRP have demonstrated that axial cracks in the nozzle tube material do not pose a challenge to the structural integrity of the nozzle. However, axial cracks may lead to pressure boundary leaks above the weld that could produce OD circumferential cracks and structural integrity concerns. Therefore, proper analysis of potential axial cracks in the blind zone of the CEDM nozzle is essential.

Postulated cracks for the analysis include axial ID and OD part through-wall and through-wall cracks. Axial cracks are selected for evaluation in this analysis because of their potential to propagate to the weld region. Axial ID and OD part through-wall crack sizes equal the smallest crack sizes successfully detected by UT under the EPRI MRP Inspection Demonstration Program. Through-wall cracks are sized based on the stress distribution in the area of interest. The ID and OD part through-wall and through-wall cracks are located along the circumference of each nozzle at the 0° (downhill), 90° (mid-plane), and 180° (uphill) azimuthal locations, 0° (downhill) being the furthest point from the center of the RPV head.

The analyses performed in the engineering evaluation are designed to determine the behavior of postulated cracks that could exist in the blind zone. Hence, the crack growth region is from the top of the blind zone to the bottom of the weld. The fracture mechanics evaluation shows that an ID-initiated flaw will not grow through-wall and reach into the weld establishing a leak path within one cycle of operation for any of the nozzle locations.

Twenty-eight (28) different cases have been analyzed using crack growth rates from EPRI Report MRP-55, *Material Reliability Program – Crack Growth Rates for Evaluating Primary Water Stress Corrosion Cracking (PWSCC) of Thick-Wall Alloy 600 Material.* In summary, the evaluation results from all cases at the uphill and mid-plane locations indicate that axial cracks in the blind zone will not propagate into the weld region within one cycle of operation. However, in five cases, postulated OD part through-wall and through-wall cracks at the 0°

and downhill location of the 8.8° and 28.8° CEDM nozzles are predicted to propagate into the weld in less than one cycle of operation. In two other cases fracture mechanics evaluations cannot be performed for OD part through-wall and through-wall cracks at the downhill location of the 49.6° CEDM nozzle due to the extension of the weld into the blind zone. Results of the fracture mechanics evaluations are documented in Table 17 of the Engineering Report and are summarized in Table 3.

Based on the results of the fracture mechanics evaluation presented in Table 3, the downhill location of ANO-2 CEDM nozzles is the critical location at which a crack could potentially grow from the blind zone to the bottom of the weld in less than one cycle of operation. To assess this crack growth potential at the downhill location of the CEDM nozzles, results from the fracture mechanics analysis are evaluated against UT data obtained from inspection of all eighty-one (81) CEDM nozzles during the ANO-2 Spring 2002 refueling outage. For consistency, the UT data has been adjusted to account for initial crack size assumptions in the fracture mechanics analysis. Except for CEDM nozzles at penetrations 6, 7, 9, 20, 25, and 58, the evaluation indicates that cracks could grow into the welds of seventy-five (75) of the 81 CEDM nozzles within one cycle of operation. Therefore, these 75 nozzles are subject to an augmented inspection program. The results of this evaluation are documented in Table 4.

Additional Analysis for Augmented Inspections

CEDM nozzles are subject to the augmented inspection program when sufficient available crack propagation length does not exist for a given nozzle. For these nozzles additional analysis is performed to determine how much additional length in the blind zone is required to ensure one cycle of crack growth without compromising the weld. See Figure 3.

The augmented inspection ensures that this additional area in the blind zone is free of PWSCC, thereby providing additional assurance that a crack in the blind zone will not propagate into the weld in less than one cycle of operation. The augmented inspection utilizes the ECT and/or PT examination method(s).

Because analysis has excluded the nozzle ID and a portion of the nozzle OD circumference as locations of unacceptable crack growth, the area of interest is limited to the OD of the downhill azimuthal region of the nozzle.

The inspection boundaries for augmented inspection are established by fracture mechanics. The top of the augmented inspection zone is defined by the upper limit of the blind zone (1.544 inches above the bottom of the nozzle). The bottom and circumferential extent of the augmented inspection zone is determined by analysis. The bottom of the augmented inspection zone is established by first identifying a point at the downhill (0°) azimuthal location from which a crack could not propagate into the weld region within one cycle of operation. Likewise, the circumferential extent of the augmented inspection zone is established by identifying a point along the upper limit of the blind zone from which a crack could not propagate into the weld region in one cycle of operation. Based on the results of this evaluation, augmented inspection zone boundaries are established as shown in Table 5.

As shown in Table 5, the circumferential extent of the augmented surface examination is less than 360° for the CEDM nozzles located at the 8.8°, 28.8°, and 49.6° head angle. By limiting augmented inspection to that portion of the nozzle defined by analysis, the effective radiation dose on inspection team personnel is minimized while providing assurance that PWSCC will not cause a leak during the operating cycle following the inspection.

Conclusion

For details regarding the engineering evaluation and its conclusions, see Engineering Report M-EP-2003-002, Revision 1.

This analysis incorporates a crack-growth formula different from that described in Footnote 1 of the Order, as provided in EPRI Report MRP-55. Entergy is aware that the NRC staff has not yet completed a final assessment regarding the acceptability of the EPRI report. If the NRC staff finds that the crack-growth formula in MRP-55 is unacceptable, Entergy shall revise its analysis that justifies relaxation of the Order within 30 days after the NRC informs Entergy of an NRC-approved crack-growth formula. If Entergy's revised analysis shows that the crack growth acceptance criteria are exceeded prior to the end of Operating Cycle 17 (following the upcoming refueling outage), Entergy will, within 72 hours, submit to the NRC written justification for continued operation. If the revised analysis shows that the crack growth acceptance criteria are exceeded during the subsequent operating cycle, Entergy shall, within 30 days, submit the revised analysis for NRC review. If the revised analysis shows that the crack growth acceptance criteria are not exceeded during either Operating Cycle 17 or the subsequent operating cycle, Entergy shall, within 30 days, submit a letter to the NRC confirming that its analysis has been revised. Any future crack-growth analyses performed for Operating Cycle 17 and future cycles for RPV head penetrations will be based on an NRC-acceptable crack growth rate formula.

3. Augmented Inspection

As discussed in Section IV.A.3, above, OD surface examinations are needed due to the inability of the UT probes to inspect the extent of the CEDM nozzles as required by the Order. Entergy believes the use of either ECT or PT, or a combination of the two techniques to augment UT is acceptable for ensuring that the required areas not justified by analysis are inspected. The Order recognizes and allows the use of either technique as acceptable for evaluating the condition of nozzle surfaces. On this basis, Entergy concludes using this examination approach provides an equivalent level of quality and safety to the options allowed by the Order.

Entergy intends to use ECT as the primary surface examination technique to the extent. However, in cases where ECT is not effective (e.g., transducer lift-off due to surface undulations causing loss of coupling), Entergy will use PT.

4. Augmented Inspection Sampling Program

Entergy contends that the sample criteria select CEDM nozzles to be inspected; they have a higher potential to crack than those not meeting the criteria. Entergy believes that to examine every nozzle will impose hardships without a compensating increase in the level of quality and safety for the following reasons:

a) High Personnel Dose

The ECT process that will be used to perform the augmented inspections is being developed as a manual delivery system. Prototype mock-ups have not been completed so factual time studies are not available on a per-nozzle basis. However, based on similar inspections, Entergy estimates performing the augmented inspections of the 75 nozzles will involve a radiation exposure of approximately 6 to 10 man-REM.

The preferred method for inspecting the augmented inspection area is ECT; however, this equipment is being newly developed and has not been field proven. In the event ECT can not be used on all or some of the nozzles requiring augmented inspection, PT would be required. As indicated above, the dose estimate for performing the ECT is 6 to 10 man-REM. The dose estimate for performing PT is approximately 38 man-REM.

b) Adverse Impact to Nozzle Base Material

Because PT cannot distinguish PWSCC from fabrication discontinuities, PT indications are explored by grinding. Grinding of the weld metal and/or nozzle base material will cause localized work-hardening that will result in an increased susceptibility to PWSCC in that particular area of the nozzle.

Entergy believes that the criteria used to select nozzles for augmented inspection along with the size of the sample population establishes reasonable assurance that if a degraded nozzle were to exist, it would be identified. The additional confidence that would be gained by performing the augmented inspection on the remaining 58 nozzles is not commensurate with the hardship and dose expenditure described in Section IV.B.3.

Entergy believes that by employing analytical and inspection techniques, the three-step proposed alternative discussed above provides an adequate process for inspecting, evaluating, and determining the condition of the ANO-2 RPV head penetration CEDM nozzles with regard to the presence of PWSCC. Therefore, Entergy concludes that the proposed alternative adequately meets the intent of the Order.

V. CONCLUSION

Section IV.F of the Order states:

"Licensees proposing to deviate from the requirements of this Order shall seek relaxation of this Order pursuant to the procedure specified below. The Director, Office of Nuclear Reactor Regulation, may, in writing, relax or rescind any of the above conditions upon demonstration by the Licensee of good cause. A request for relaxation regarding inspection of specific nozzles shall also address the following criteria:

(1) The proposed alternative(s) for inspection of specific nozzles will provide an acceptable level of quality and safety, or

(2) Compliance with this Order for specific nozzles would result in hardship or unusual difficulty without a compensating increase in the level of quality and safety."

Section IV.C(1)(b) of the Order establishes a minimum set of RPV head penetration nozzle inspection requirements to identify the presence of cracks in penetration nozzles that could lead to leakage of reactor coolant and wastage of RPV head material.

Entergy believes that compliance with the UT inspection provisions of Section IV.C(1)(b)(i) of the Order as described in Section II above would result in hardships and unusual difficulties, as discussed in Section III above, without a compensating increase in the level of quality and safety. Entergy believes the proposed alternative, described in Section IV, provides an acceptable level of quality and safety by utilizing inspections and supplemental analysis to determine the condition of the ANO-2 CEDM nozzles. The technical basis for the supplemental analysis and the augmented inspections of the proposed alternative is documented in Engineering Report M-EP-2003-002, Rev. 1, which is contained in Enclosure 2 of this letter. Therefore, Entergy requests that the proposed alternative be authorized pursuant to Section IV.F of the Order.

TABLE 1

Evaluation of CEDM Nozzles for Augmented Inspection

CEDM Nozzle		Candidate for Augmented Inspection [1]	CEDM Nozzle Heat Number Information			Selected for Augmented Inspection [3]	Augmented Inspection Boundary (referenced from bottom of nozzle)			
No.	Head Angle		Heat Number	Yield Strength	History of PWSCC [2]		Top Elevation	Bottom Elevation	Axial Length	Azimuthal Location and Circumferential Extent
1	0°	Yes	A6953	42.5 ksi	No	Yes	1.544"	1.090"	0.454"	Downhill ± 180°
2	8.8°	Yes	A6953	42.5 ksi	No	Yes [5]	1.544"	1.090"	0.454"	Downhill ± 67.5°
3	8.8°	Yes	A6953	42.5 ksi	No	No	N/A	N/A	N/A	N/A
4	8.8°	Yes	A6953	42.5 ksi	No	No	N/A	N/A	N/A	N/A
5	8.8°	Yes	A6953	42.5 ksi	No	No	N/A	N/A	N/A	N/A
6	12.4°	No [6]	A6953	42.5 ksi	No	No	N/A	N/A	N/A	N/A
7	12.4°	No [6]	A6954	35.0 ksi	No	No	N/A	N/A	N/A	N/A
8	12.4°	Yes	A6954	35.0 ksi	No	No	N/A	N/A	N/A	N/A
9	12.4°	No [6]	A6953	42.5 ksi	No	No	N/A	N/A	N/A	N/A
10	17.7°	Yes	A6953	42.5 ksi	No	Yes	1.544"	1.224"	0.320"	Downhill ± 22.5°
11	17.7°	Yes	A6954	35.0 ksi	No	No	N/A	N/A	N/A	N/A
12	17.7°	Yes	A6954	35.0 ksi	No	No	N/A	N/A	N/A	N/A
13	17.7°	Yes	A6954	35.0 ksi	No	No	N/A	N/A	N/A	N/A
14	19.9°	Yes	A6954	35.0 ksi	No	No	N/A	N/A	N/A	N/A
15	19.9°	Yes	A6955	40.0 ksi	No	Yes	1.544"	1.224"	0.320"	Downhill ± 22.5°
16	19.9°	Yes	A6955	40.0 ksi	No	Yes	1.544"	1.224"	0.320"	Downhill ± 22.5°
17	19.9°	Yes	A6955	40.0 ksi	No	No [7]	N/A	N/A	N/A	N/A
18	19.9°	Yes	A6954	35.0 ksi	No	No	N/A	N/A	N/A	N/A
19	19.9°	Yes	A6955	40.0 ksi	No	No [7]	N/A	N/A	N/A	N/A
20	19.9°	No [6]	A6955	40.0 ksi	No	No	N/A	N/A	N/A	N/A
21	19.9°	Yes	A6955	40.0 ksi	No	No [7]	N/A	N/A	N/A	N/A
22	25.5°	Yes	A6926	39.5 ksi	No	No	N/A	N/A	N/A	N/A
23	25.5°	Yes	A6926	39.5 ksi	No	No	N/A	N/A	N/A	N/A
24	25.5°	Yes	A6785	56.0 ksi	Yes	Yes	1.544"	1.224"	0.320"	Downhill ± 22.5°
25	25.5°	No [6]	A6785	56.0 ksi	Yes	No [4]	N/A	N/A	N/A	N/A
26	27.2°	Yes	A6777	35.0 ksi	No	No	N/A	N/A	N/A	N/A
27	27.2°	Yes	A6777	35.0 ksi	No	No	N/A	N/A	N/A	N/A
28	27.2°	Yes	A6953	42.5 ksi	No	Yes	1.544"	1.224"	0.320"	Downhill ± 22.5°

CEDM Nozzle		Candidate for Augmented Inspection (1)	CEDM Nozzle Heat Number Information			Selected for Augmented Inspection (3)	Augmented Inspection Boundary (referenced from bottom of nozzle)			
No.	Head Angle		Heat Number	Yield Strength	History of PWSCC (2)		Top Elevation	Bottom Elevation	Axial Length	Azimuthal Location and Circumferential Extent
29	27.2°	Yes	A6953	42.5 ksi	No	Yes	1.544"	1.224"	0.320"	Downhill ± 22.5°
30	28.8°	Yes	A6926	35.0 ksi	No	No	N/A	N/A	N/A	N/A
31	28.8°	Yes	A6926	35.0 ksi	No	No	N/A	N/A	N/A	N/A
32	28.8°	Yes	A6926	35.0 ksi	No	No	N/A	N/A	N/A	N/A
33	28.8°	Yes	A6926	35.0 ksi	No	No	N/A	N/A	N/A	N/A
34	28.8°	Yes	A6926	35.0 ksi	No	No	N/A	N/A	N/A	N/A
35	28.8°	Yes	A6926	35.0 ksi	No	No	N/A	N/A	N/A	N/A
36	28.8°	Yes	A6926	35.0 ksi	No	No	N/A	N/A	N/A	N/A
37	28.8°	Yes	A6926	35.0 ksi	No	No	N/A	N/A	N/A	N/A
38	33.3°	Yes	A6954	35.0 ksi	No	No	N/A	N/A	N/A	N/A
39	33.3°	Yes	A6954	35.0 ksi	No	No	N/A	N/A	N/A	N/A
40	33.3°	Yes	A6954	35.0 ksi	No	No	N/A	N/A	N/A	N/A
41	33.3°	Yes	A6954	35.0 ksi	No	No	N/A	N/A	N/A	N/A
42	33.3°	Yes	A6954	35.0 ksi	No	No	N/A	N/A	N/A	N/A
43	33.3°	Yes	A6954	35.0 ksi	No	No	N/A	N/A	N/A	N/A
44	33.3°	Yes	A6954	35.0 ksi	No	No	N/A	N/A	N/A	N/A
45	33.3°	Yes	A6954	35.0 ksi	No	No	N/A	N/A	N/A	N/A
46	37.6°	Yes	A6954	35.0 ksi	No	No	N/A	N/A	N/A	N/A
47	37.6°	Yes	A6954	35.0 ksi	No	No	N/A	N/A	N/A	N/A
48	37.6°	Yes	A6954	35.0 ksi	No	No	N/A	N/A	N/A	N/A
49	37.6°	Yes	A6954	35.0 ksi	No	No	N/A	N/A	N/A	N/A
50	38.9°	Yes	A6954	35.0 ksi	No	No	N/A	N/A	N/A	N/A
51	38.9°	Yes	A6954	35.0 ksi	No	No	N/A	N/A	N/A	N/A
52	38.9°	Yes	A6954	35.0 ksi	No	No	N/A	N/A	N/A	N/A
53	38.9°	Yes	A6954	35.0 ksi	No	No	N/A	N/A	N/A	N/A
54	38.9°	Yes	A6954	35.0 ksi	No	No	N/A	N/A	N/A	N/A
55	38.9°	Yes	A6954	35.0 ksi	No	No	N/A	N/A	N/A	N/A
56	38.9°	Yes	A6954	35.0 ksi	No	No	N/A	N/A	N/A	N/A
57	38.9°	Yes	A6954	35.0 ksi	No	No	N/A	N/A	N/A	N/A
58	40.3°	No (6)	A6953	42.5 ksi	No	No	N/A	N/A	N/A	N/A
59	40.3°	Yes	A6953	42.5 ksi	No	Yes	1.544"	0.883"	0.661"	Downhill ± 45.0°
60	40.3°	Yes	A6953	42.5 ksi	No	Yes	1.544"	0.883"	0.661"	Downhill ± 45.0°

CEDM Nozzle		Candidate for Augmented Inspection [1]	CEDM Nozzle Heat Number Information			Selected for Augmented Inspection [3]	Augmented Inspection Boundary (referenced from bottom of nozzle)			
No.	Head Angle		Heat Number	Yield Strength	History of PWSCC [2]		Top Elevation	Bottom Elevation	Axial Length	Azimuthal Location and Circumferential Extent
61	40.3°	Yes	A6953	42.5 ksi	No	Yes	1.544"	0.883"	0.661"	Downhill ± 45.0°
62	43.0°	Yes	A6953	42.5 ksi	No	Yes	1.544"	0.883"	0.661"	Downhill ± 45.0°
63	43.0°	Yes	A6953	42.5 ksi	No	Yes	1.544"	0.883"	0.661"	Downhill ± 45.0°
64	43.0°	Yes	A6953	42.5 ksi	No	Yes	1.544"	0.883"	0.661"	Downhill ± 45.0°
65	43.0°	Yes	A6953	42.5 ksi	No	Yes	1.544"	0.883"	0.661"	Downhill ± 45.0°
66	43.0°	Yes	A6953	42.5 ksi	No	Yes	1.544"	0.883"	0.661"	Downhill ± 45.0°
67	43.0°	Yes	A6953	42.5 ksi	No	Yes	1.544"	0.883"	0.661"	Downhill ± 45.0°
68	43.0°	Yes	A6953	42.5 ksi	No	No [8]	N/A	N/A	N/A	N/A
69	43.0°	Yes	A6953	42.5 ksi	No	No [8]	N/A	N/A	N/A	N/A
70	49.6°	Yes	A6955	40.0 ksi	No	No	N/A	N/A	N/A	N/A
71	49.6°	Yes	A6955	40.0 ksi	No	No	N/A	N/A	N/A	N/A
72	49.6°	Yes	A6953	42.5 ksi	No	No [8]	N/A	N/A	N/A	N/A
73	49.6°	Yes	A6954	35.0 ksi	No	No	N/A	N/A	N/A	N/A
74	49.6°	Yes	A6954	35.0 ksi	No	No	N/A	N/A	N/A	N/A
75	49.6°	Yes	A6955	40.0 ksi	No	No	N/A	N/A	N/A	N/A
76	49.6°	Yes	A6953	42.5 ksi	No	No [8]	N/A	N/A	N/A	N/A
77	49.6°	Yes	A6955	40.0 ksi	No	No	N/A	N/A	N/A	N/A
78	49.6°	Yes	A6953	42.5 ksi	No	No [8]	N/A	N/A	N/A	N/A
79	49.6°	Yes	A6955	40.0 ksi	No	No	N/A	N/A	N/A	N/A
80	49.6°	Yes	A6955	40.0 ksi	No	No	N/A	N/A	N/A	N/A
81	49.6°	Yes	A6954	35.0 ksi	No	No	N/A	N/A	N/A	N/A

Notes for Table 1:

1. CEDM nozzles are subject to augmented inspection under either of the following conditions:
   - Postulated cracks can grow from the blind zone into the weld within one cycle of plant operation
   - The nozzle attachment weld extends into the blind zone region.
2. If "yes", refer to Table 2 for summary of known industry cracking history for each specific heat of Alloy 600 material.
3. When augmented inspection is required, sample nozzles are selected based on a sample plan that meets criteria of Section IV.A.3.
4. CEDM nozzle number 25 was manufactured from Heat A6785 of SB-166 Alloy 600 material. Although one of nine nozzles manufactured from this heat of material experienced cracking at St. Lucie 2, this nozzle is not subject to augmented inspection. According to the engineering analysis, a crack located in the blind zone of this nozzle would not propagate into the weld region in less than one cycle of plant operation.
5. One (1) nozzle must be examined for augmented inspection from the nozzle group bounded by the 8.8° nozzle location analysis. Nozzle 2 has been selected for examination. However, as an alternative to nozzle 2, nozzle 3, 4, or 5 may be examined because all nozzles in this group are of the same heat number and yield strength.
6. This nozzle is excluded from augmented inspection based on the fracture mechanics evaluation and available crack propagation length (see Table 3)..
7. Six (6) nozzles must be examined for augmented inspection from the nozzle group bounded by the 28.8° nozzle location analysis. Selected nozzles are 10, 15, 16, 24, 28, and 29. However, as an alternative to these nozzles, nozzles 17, 19, and/or 21 may be examined because all of these nozzles are of the same heat number and yield strength.
8. Nine (9) nozzles must be examined for augmented inspection from the nozzle group bounded by the 49.6° nozzle location analysis. Selected nozzles are 59, 60, 61, 62, 63, 64, 65, 66, and 67. However, as an alternative to any of these nozzles, nozzles 68, 69, 72, 76, and/or 78 may be examined because all of these nozzles are of the same heat number and yield strength.

TABLE 2

Industry History of Known Cracking for Heats of Alloy 600 Material Use in ANO-2 CEDM Nozzles

Plant	Nozzle Function	Heat	Form	Supplier	Inspection Date	Inspection Type	Total Number of Nozzles	Nozzles With Cracks
Plant A	CEDM	A6785	SB-166	Standard Steel	Spring 2003	100% UT	9	1 of 9 Cracked
Plant A	CEDM	E03045	SB-166	Standard Steel	Spring 2003	100% UT	35	1 of 35 Cracked
Plant B	CEDM	NX1045	SB-167	Huntington Alloy	Not Known	100% UT	3	3 of 58 Cracked

TABLE 3

Results of Crack Growth Analysis

CEDM Location (Head Angle)	Nozzle Azimuth Location	Axial Crack Evaluated	Crack Evaluation Results
0°	All	ID Part through-wall	Greater than 1 Cycle to reach Weld
		OD Part through-wall	Less than 1 Cycle to reach Weld
		Through-wall	Less than 1 Cycle to reach Weld
8.8°	Downhill	ID Part through-wall	Greater than 1 Cycle to reach Weld
		OD Part through-wall	Less than 1 Cycle to reach Weld
		Through-wall	Less than 1 Cycle to reach Weld
	Uphill	ID Part through-wall	Greater than 1 Cycle to reach Weld
		OD Part through-wall	Greater than 1 Cycle to reach Weld
		Through-wall	Greater than 1 Cycle to reach Weld
	Mid-plane	ID Part through-wall	Greater than 1 Cycle to reach Weld
		OD Part through-wall	Greater than 1 Cycle to reach Weld
		Through-wall	Greater than 1 Cycle to reach Weld
28.8°	Downhill	ID Part through-wall	Greater than 1 Cycle to reach Weld
		OD Part through-wall	Less than 1 Cycle to reach Weld
		Through-wall	Greater than 1 Cycle to reach Weld
	Uphill	ID Part through-wall	Greater than 1 Cycle to reach Weld
		OD Part through-wall	Greater than 1 Cycle to reach Weld
		Through-wall	Greater than 1 Cycle to reach Weld
	Mid-plane	ID Part through-wall	Greater than 1 Cycle to reach Weld
		OD Part through-wall	Greater than 1 Cycle to reach Weld
		Through-wall	Greater than 1 Cycle to reach Weld
49.6°	Downhill	ID Part through-wall	Greater than 1 Cycle to reach Weld
		OD Part through-wall	Not analyzed - weld extends into blind zone
		Through-wall	Not analyzed - weld extends into blind zone
	Uphill	ID Part through-wall	Greater than 1 Cycle to reach Weld
		OD Part through-wall	Greater than 1 Cycle to reach Weld
		Through-wall	Greater than 1 Cycle to reach Weld
	Mid-plane	ID Part through-wall	Greater than 1 Cycle to reach Weld
		OD Part through-wall	Greater than 1 Cycle to reach Weld
		Through-wall	Greater than 1 Cycle to reach Weld

TABLE 4

CEDM NOZZLES AUGMENTED INSPECTION

Penetration No.	Penetration Head Angle	Analytical Crack Growth Per Cycle[1]	Available Propagation Length Based on UT Data[5]	Crack Growth Into Weld Within 1 Cycle	Subject to Augmented Inspection
1	0°	0.576"	0.32"	Yes	Yes
2	8.8°	0.560"	0.24"	Yes	Yes
3	8.8°	0.560"	0.16"	Yes	Yes
4	8.8°	0.560"	0.18"	Yes	Yes
5	8.8°	0.560"	0.32"	Yes	Yes
6	12.4°	0.086" [2]	0.28"	No	No
7	12.4°	0.086" [2]	0.16"	No	No
8	12.4°	0.086" [2]	0.040"	Yes	Yes
9	12.4°	0.086" [2]	0.32"	No	No
10	17.7°	0.086" [2]	0.000"	Yes	Yes
11	17.7°	0.086" [2]	0.000"	Yes	Yes
12	17.7°	0.086" [2]	0.000"	Yes	Yes
13	17.7°	0.086" [2]	0.000"	Yes	Yes
14	19.9°	0.086" [2]	0.000"	Yes	Yes
15	19.9°	0.086" [2]	0.000"	Yes	Yes
16	19.9°	0.086" [2]	0.000"	Yes	Yes
17	19.9°	0.086" [2]	0.000"	Yes	Yes
18	19.9°	0.086" [2]	0.080"	Yes	Yes
19	19.9°	0.086" [2]	0.000"	Yes	Yes
20	19.9°	0.086" [2]	0.320"	No	No
21	19.9°	0.086" [2]	0.080"	Yes	Yes
22	25.5°	0.086" [2]	0.000"	Yes	Yes
23	25.5°	0.086" [2]	0.000"	Yes	Yes
24	25.5°	0.086" [2]	0.000"	Yes	Yes
25	25.5°	0.086" [2]	0.120"	No	No
26	27.2°	0.086" [2]	0.000"	Yes	Yes
27	27.2°	0.086" [2]	0.000"	Yes	Yes
28	27.2°	0.086" [2]	0.080"	Yes	Yes
29	27.2°	0.086" [2]	0.000"	Yes	Yes
30	28.8°	0.086"	0.000"	Yes	Yes
31	28.8°	0.086"	0.040"	Yes	Yes
32	28.8°	0.086"	0.000"	Yes	Yes
33	28.8°	0.086"	0.000"	Yes	Yes
34	28.8°	0.086"	0.040"	Yes	Yes
35	28.8°	0.086"	0.000"	Yes	Yes
36	28.8°	0.086"	0.000"	Yes	Yes
37	28.8°	0.086"	0.080"	Yes	Yes
38	33.3°	(3)	0.000"	Yes	Yes
39	33.3°	(3)	0.000"	Yes	Yes
40	33.3°	(3)	0.000"	Yes	Yes
41	33.3°	(3)	0.000"	Yes	Yes
42	33.3°	(3)	0.000"	Yes	Yes
43	33.3°	(3)	0.000"	Yes	Yes

Penetration		Analytical Crack Growth Per Cycle[1]	Available Propagation Length Based on UT Data[5]	Crack Growth Into Weld Within 1 Cycle	Subject to Augmented Inspection
No.	Head Angle				
44	33.3°	(3)	0.080"	Yes	Yes
45	33.3°	(3)	0.000"	Yes	Yes
46	37.6°	(3)	0.000"	Yes	Yes
47	37.6°	(3)	0.000"	Yes	Yes
48	37.6°	(3)	No Data	Yes	Yes
49	37.6°	(3)	No Data	Yes	Yes
50	38.9°	(3)	No Data	Yes	Yes
51	38.9°	(3)	0.000"	Yes	Yes
52	38.9°	(3)	0.000"	Yes	Yes
53	38.9°	(3)	No Data	Yes	Yes
54	38.9°	(3)	0.000"	Yes	Yes
55	38.9°	(3)	0.000"	Yes	Yes
56	38.9°	(3)	0.000"	Yes	Yes
57	38.9°	(3)	0.000"	Yes	Yes
58	40.3°	(3)	0.160"	No	No
59	40.3°	(3)	0.080"	Yes	Yes
60	40.3°	(3)	0.080"	Yes	Yes
61	40.3°	(3)	0.000"	Yes	Yes
62	43.0°	(3)	0.000"	Yes	Yes
63	43.0°	(3)	0.040"	Yes	Yes
64	43.0°	(3)	0.040"	Yes	Yes
65	43.0°	(3)	0.000"	Yes	Yes
66	43.0°	(3)	0.000"	Yes	Yes
67	43.0°	(3)	0.080"	Yes	Yes
68	43.0°	(3)	0.000"	Yes	Yes
69	43.0°	(3)	0.000"	Yes	Yes
70	49.6°	(3)	0.000"	Yes	Yes
71	49.6°	(3)	0.000"	Yes	Yes
72	49.6°	(3)	0.000"	Yes	Yes
73	49.6°	(3)	0.000"	Yes	Yes
74	49.6°	(3)	0.000"	Yes	Yes
75	49.6°	(3)	0.000"	Yes	Yes
76	49.6°	(3)	0.000"	Yes	Yes
77	49.6°	(3)	0.000"	Yes	Yes
78	49.6°	(3)	0.000"	Yes	Yes
79	49.6°	(3)	0.000"	Yes	Yes
80	49.6°	(3)	0.000"	Yes	Yes
81	49.6°	(3)	0.000"	Yes	Yes

Notes for Table 4:

1. Allowable Propagation Length and Crack Growth Distance per Cycle are obtained from Table 17 of the Engineering Report.

2. CEDM nozzles at the 12.4°, 17.7°, 19.9°, 25.5°, and 27.2° locations are bounded by fracture mechanics analysis results on CEDM nozzles at the 28.8° nozzle location.

3. CEDM nozzles at the 33.3°, 37.6°, 38.9°, 40.3°, and 43.0° locations are bounded fracture mechanics analysis results on CEDM nozzles at the 49.6° nozzle locations. However, because the weld extends into the blind zone of the 49.6° nozzle at the downhill azimuthal location, a fracture mechanics analysis could not be performed for the OD part through-wall and through-wall cracks.

4. For CEDM nozzles at the 49.6° location, weld extends into "blind zone". Therefore, there is no "Available Propagation Length" at this nozzle location.

5. The "Available Propagation Length Based on UT Data" is based on UT data obtained during the ANO-2 Spring 2002 refueling outage. For CEDM nozzles at the 12.4°, 17.7°, 19.9°, 25.5°, 27.2°, and 28.8° locations, this length is shortened by 0.160" to account for initial crack size assumptions in the analysis.

TABLE 5

AUGMENTED SURFACE EXAMINATION

CEDM Location	Nozzle Azimuth Location	Boundary for Augmented Surface Examination			
		Top Elevation	Bottom Elevation	Axial Length	Circumferential Extent [1]
0°	Downhill	1.544"	1.090"	0.454"	DH ± 180°
8.8°	Downhill	1.544"	1.090"	0.454"	DH ± 67.5°
28.8°	Downhill	1.544"	1.224"	0.320"	DH ± 22.5°
49.6°	Downhill	1.544"	0.883"	0.661"	DH ± 45°

Note:

1. "DH" = "downhill"

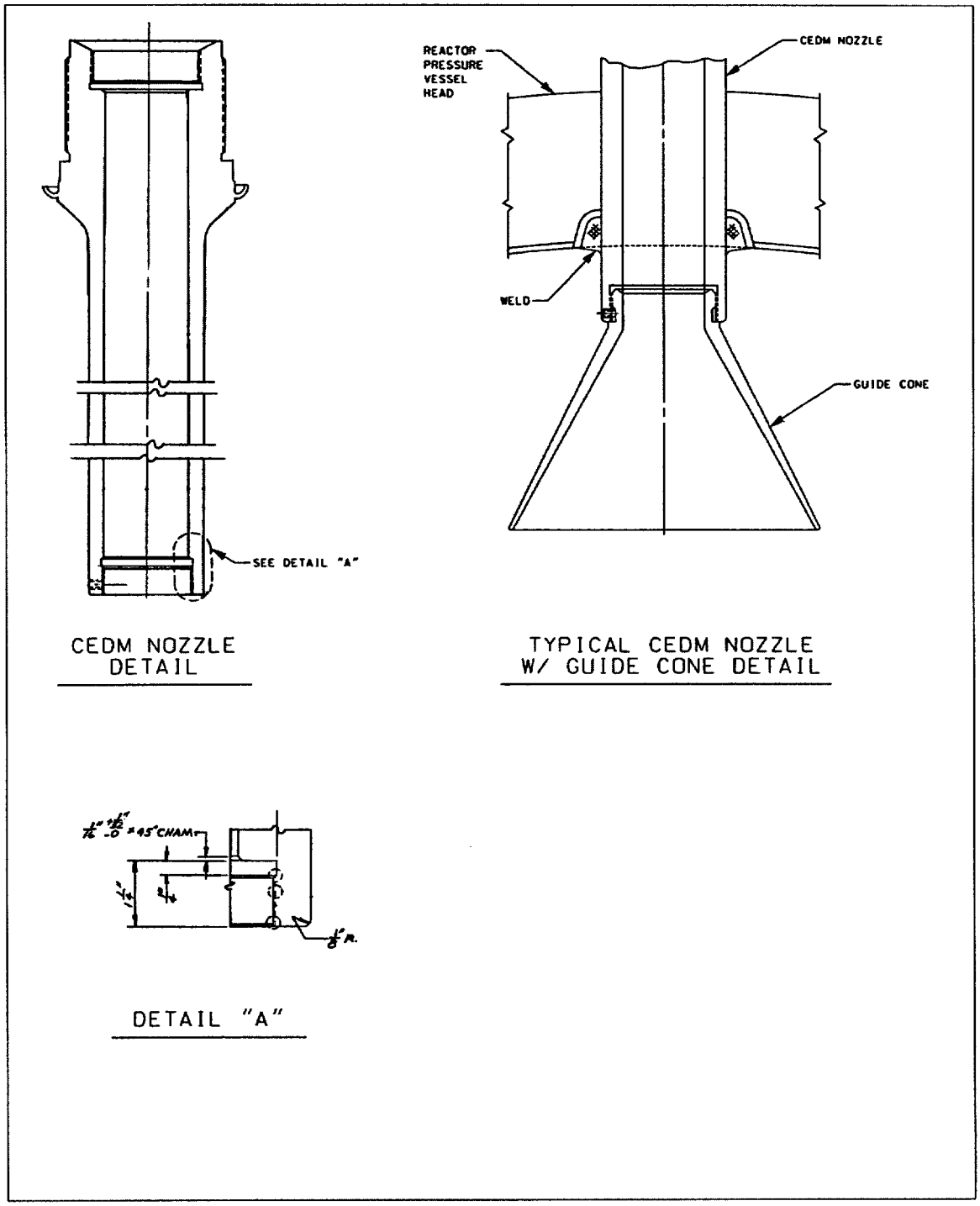

FIGURE 1
TYPICAL CEDM NOZZLE DETAILS

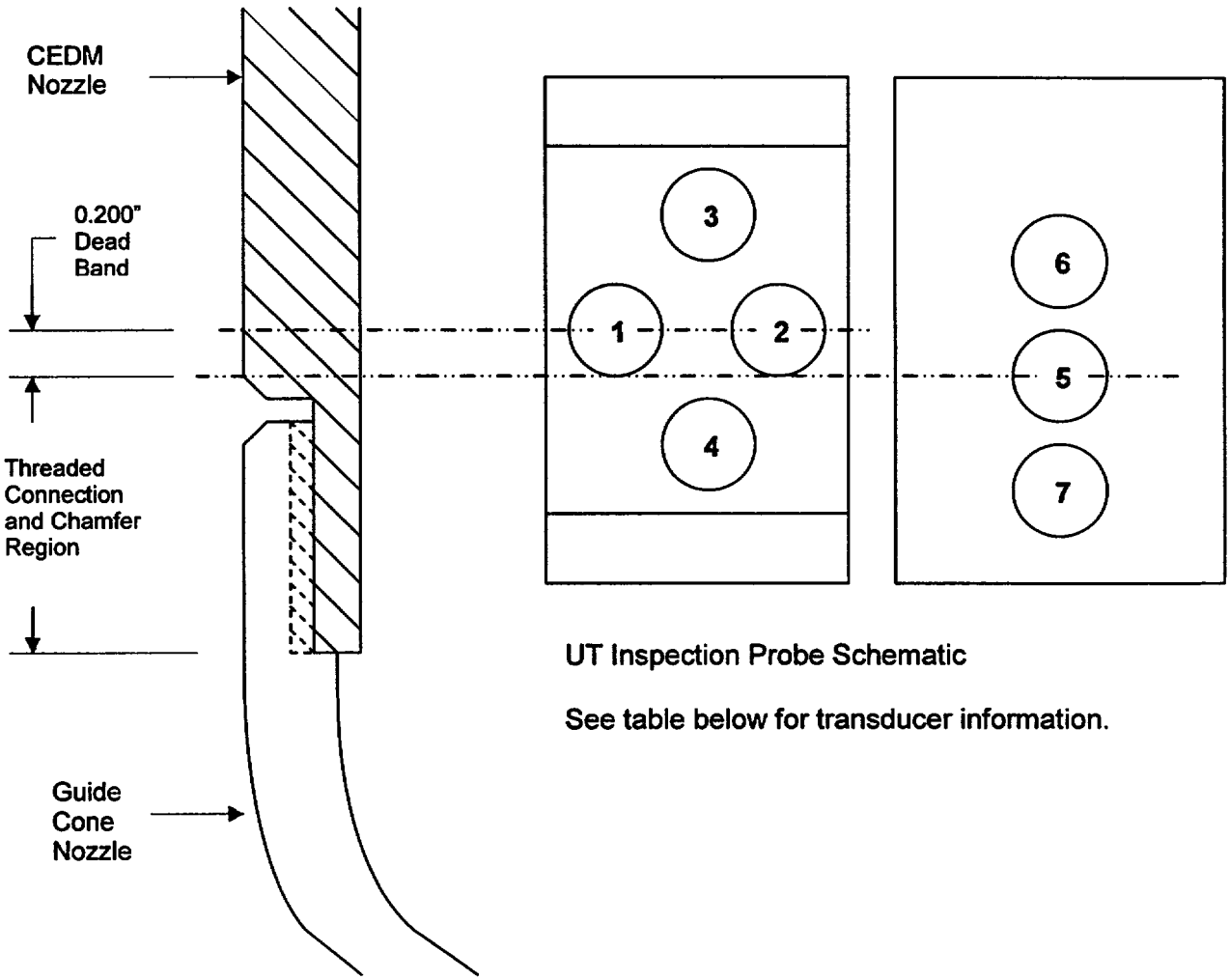

Position	Mode	Diameter	Description
1	Transmit	0.25 inch	Circumferential Scan Using TOFD
2	Receive	0.25 inch	Circumferential Scan Using TOFD
3	Transmit	0.25 inch	Axial Scan Using TOFD
4	Receive	0.25 inch	Axial Scan Using TOFD
5	Transmit Receive	0.25 inch	Standard Zero Degree Scan
6	Transmit Receive	0.25 inch	Low Frequency Eddy Current
7	N/A	0.25 inch	Eddy Current

FIGURE 2
TYPICAL UT INSPECTION PROBE DETAIL

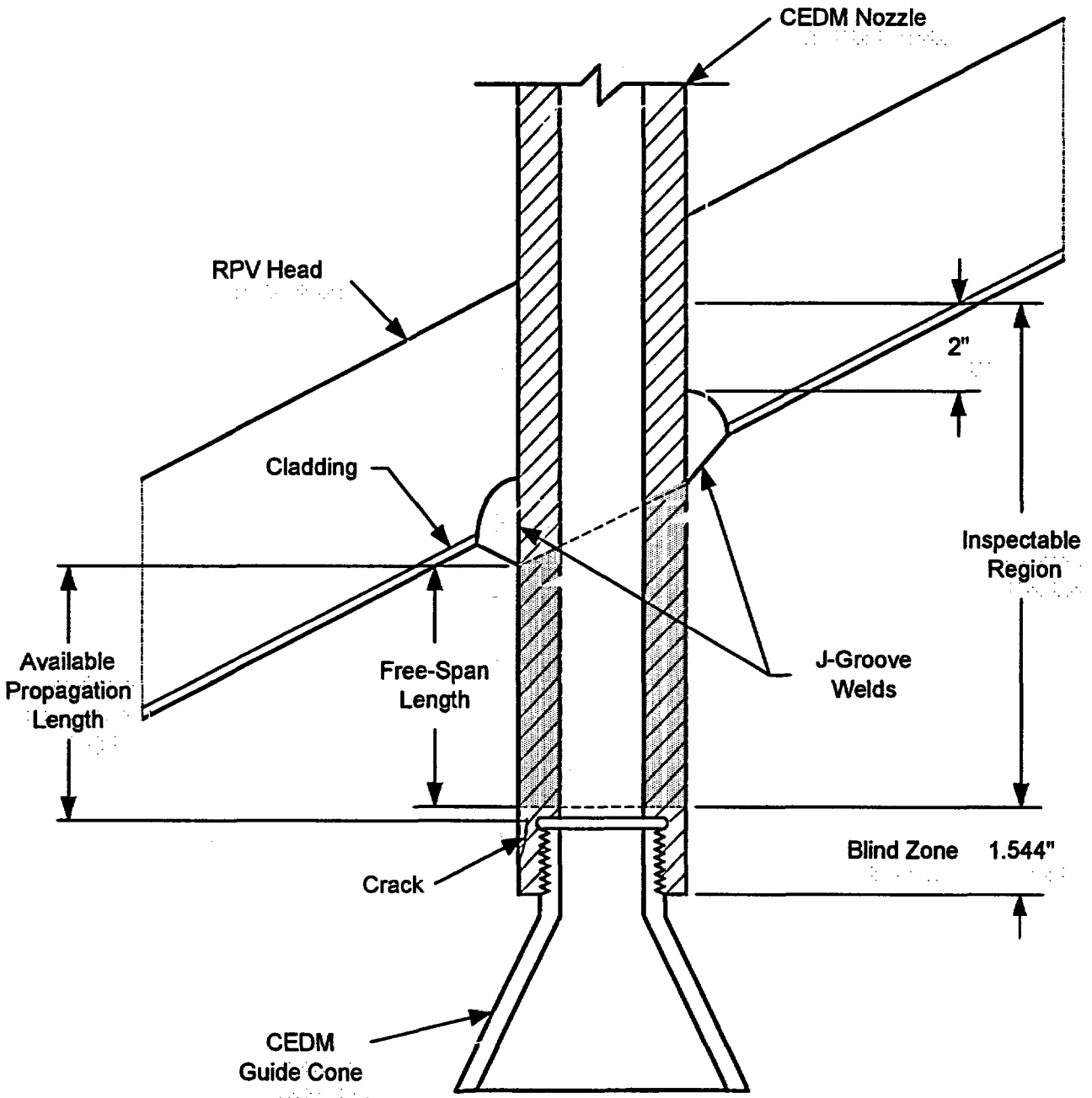

FIGURE 3
DETAIL OF CEDM NOZZLE CRACK GROWTH ANALYSIS

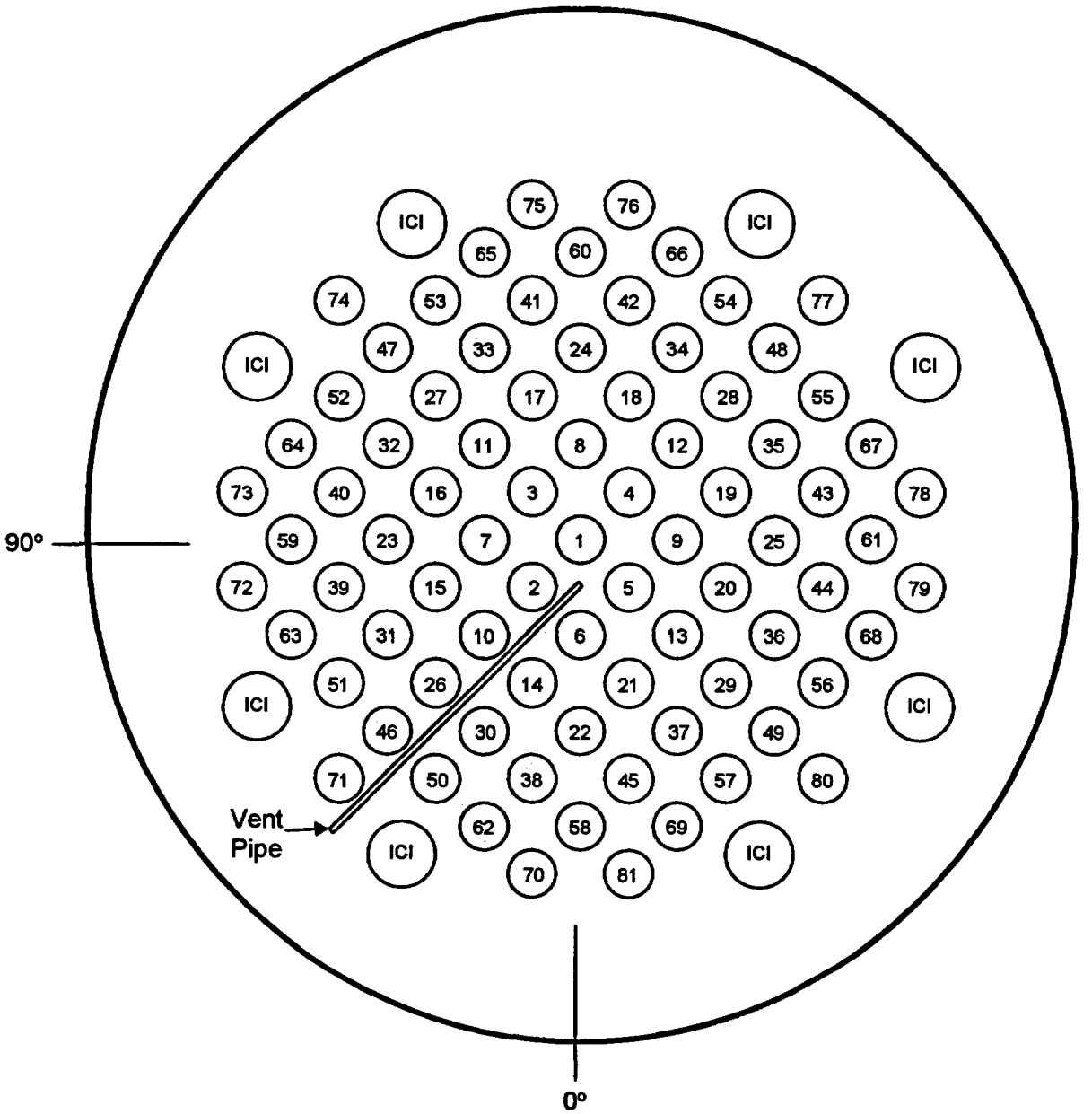

FIGURE 4
PENETRATION LOCATIONS IN THE ANO-2 RPV HEAD

ENCLOSURE 4

CNRO-2003-00033

AFFIDAVIT
FOR WITHHOLDING INFORMATION
FROM PUBLIC DISCLOSURE

AFFIDAVIT PURSUANT TO 10CFR2.790

I, E. STEPHEN HUNT, being duly sworn, affirm, and state as follows:

(1) This Affidavit supports an application to the Commission for withholding from public disclosure Dominion Engineering, Inc., (DEI) Letter L-4162-00-1, Revision 0, " Material Properties and Modeling Methods Used in ANO Unit 2 Welding Residual Stress Analyses," dated August 25, 2003. As stated in this letter, because the non-proprietary version of this letter would remove information to the point of not making sense, only a proprietary version will be transmitted.

(2) I am a Principal Officer of Dominion Engineering, Inc. (DEI), and as such, I have been specifically delegated the function of reviewing the proprietary information sought to be withheld from public disclosure in connection with nuclear power plant licensing and rulemaking proceedings, and am authorized to apply for its withholding on behalf of DEI. I have personal knowledge of the criteria and procedures utilized by DEI in designating information as a trade secret, privileged, or as confidential or financial information.

(3) I am making the Affidavit in conformance with the provisions of 10CFR §2.790 of the Commission's regulations and in conjunction with the application by Entergy Nuclear Operations for withholding accompanying this Affidavit.

(4) Public disclosure of the information sought to be withheld is likely to cause substantial harm to DEI's competitive position and foreclose or reduce the availability of substantial profit-making opportunities.

(5) The specific information in Letter L-4162-00-1, Revision 0, sought to be withheld in accordance with 10CFR §2.790 is as follows:

   (i) The methodology and modeling assumptions used by DEI to perform welding residual stress analyses.

   (ii) The specific material property input data used by DEI in performing welding residual stress analyses.

(6) Pursuant to the provisions of 10CFR §2.790(b)(4) of the Commission's regulations, the following is furnished in consideration by the Commission in determining whether the information sought to be withheld from public disclosure should be withheld.

   (i) DEI has held the subject information in confidence. DEI has controlled the subject information and not disclosed it at any public forum. Any disclosure to third parties has been made pursuant to regulatory provisions or proprietary agreements that provide for maintenance of the information in confidence.

   (ii) The information is of a sort customarily held in confidence by DEI. As described in paragraph (v) below, the information is held in confidence by DEI because disclosure would substantially affect DEI's competitive business position. This information

principally is related to the methodology, assumptions, and detailed results of welding residual stress analysis finite element models.

(iii) The information sought to be withheld is being submitted to the NRC in confidence by Entergy Nuclear Operations in conjunction with an application by Entergy Nuclear Operations for withholding.

(iv) To the best of my and DEI's knowledge, no public disclosure of this information has been made, and it is not available in public sources.

(v) Public disclosure of the information sought to be withheld is likely to cause substantial harm to DEI's competitive position because:

(A) The subject information has substantial commercial value to DEI as significant portions of DEI's future business of providing engineering consulting to nuclear utilities in this area is substantially based upon the information sought to be withheld.

(B) The expertise represented by the subject information is a substantial part of DEI's current position as a competitor in the market of assisting nuclear utilities in the management of stress corrosion cracking material degradation. Development of this expertise by DEI required the recruitment, training, and employment of skilled engineers working in the nuclear power industry for over 10 years. The information was developed at considerable expense, including attendance at dozens of industry conferences and meetings, over more than a 10 year period of actively working in the technical engineering fields addressed by the report.

(C) Similar products and services are provided by DEI's major competitors. Acquiring of the information sought to be withheld would allow the competitors to take some share of the market for providing engineering consulting services in this area.

(D) A large effort over a sustained time period would be required by DEI's competitors and others to properly acquire or duplicate the information sought to be withheld by developing the basic methodologies, selecting and justifying the many detailed assumptions, integrating the many technical issues and concerns into a defensible technical presentation, and presenting the results in an easily comprehended manner. In some cases the subject information could only be acquired through a licensing or business agreement.

(E) There is expected to remain a marketplace for services in the areas related to the subject information and currently provided by DEI for many years into the future.

I have read the foregoing and the matters stated therein are true and correct to the best of my knowledge, information and belief. I make this Affidavit under penalty of perjury under the laws of the United States of America and under the laws of the Commonwealth of Virginia.

Executed at 11730 Plaza America Drive, Suite 310, Reston, Virginia being the premises and place of business of DEI.

August 25, 2003

E. Stephen Hunt
Principal Officer

Bonita C. Bonnes
8/25/03

State of Virginia, Cty. of Fairfax
Bonita Bonnes Notary Public
My Comm Exp May 31, 2005

ENCLOSURE 5

CNRO-2003-00033

LICENSEE-IDENTIFIED COMMITMENTS

LICENSEE-IDENTIFIED COMMITMENTS

COMMITMENT	TYPE (Check one)		SCHEDULED COMPLETION DATE
	ONE-TIME ACTION	CONTINUING COMPLIANCE	
1. The final results of the inspections will be included in the 60-day report submitted to the NRC in accordance with Section IV.E of the Order.	X		60 days after startup from the next refueling outage
2. If the NRC staff finds that the crack-growth formula in MRP-55 is unacceptable, Entergy shall revise its analysis that justifies relaxation of the Order within 30 days after the NRC informs Entergy of an NRC-approved crack-growth formula.	X		Within 30 days after the NRC informs Entergy of an NRC-approved crack-growth formula.
3. If Entergy's revised analysis (#2, above) shows that the crack growth acceptance criteria are exceeded prior to the end of Operating Cycle 17 (following the upcoming refueling outage), Entergy will, within 72 hours, submit to the NRC written justification for continued operation.	X		Within 72 hours from completing the revised analysis in #2, above.
4. If the revised analysis (#2, above) shows that the crack growth acceptance criteria are exceeded during the subsequent operating cycle, Entergy shall, within 30 days, submit the revised analysis for NRC review.	X		Within 30 days from completing the revised analysis in #2, above.
5. If the revised analysis (#2, above) shows that the crack growth acceptance criteria are not exceeded during either Operating Cycle 17 or the subsequent operating cycle, Entergy shall, within 30 days, submit a letter to the NRC confirming that its analysis has been revised.	X		Within 30 days from completing the revised analysis in #2, above.
6. Any future crack-growth analyses performed for Operating Cycle 17 and future cycles for RPV head penetrations will be based on an acceptable crack growth rate formula.		X	N/A