AECL EACL

Licensing Submission

The Technology of On-Power Fueling

ACR

108-35000-LS-001
Revision 0

Prepared by
Rédigé par
M.D. Damario
ACR – Reactor and Fuel Handling

Reviewed by
Examiné par
for C.D. Francis
ACR – Reactor and Fuel Handling

Approved by
Approuvé par
for J. Millard
ACR – Reactor and Fuel Handling

2003 September

CONTROLLED - Licensing

© Atomic Energy of Canada Limited

2251 Speakman Drive
Mississauga, Ontario
Canada L5K 1B2

Septembre 2003

CONTRÔLÉ - Permis

© Énergie atomique du Canada limitée

2251, rue Speakman
Mississauga (Ontario)
Canada L5K 1B2

AECL EACL

Licensing Submission

The Technology of On-Power Fueling

ACR

108-35000-LS-001
Revision 0

2003 September

CONTROLLED - Licensing

This document and the information contained in it is made available for licensing review. All rights reserved by Atomic Energy of Canada Limited. No part of this document may be reproduced or transmitted in any form or by any means, including photocopying and recording, without the written permission of the copyright holder, application for which should be addressed to Atomic Energy of Canada Limited. Such written permission must also be obtained before any part of this document is stored in a retrieval system of any nature.

© Atomic Energy of Canada Limited

2251 Speakman Drive
Mississauga, Ontario
Canada L5K 1B2

Septembre 2003

CONTRÔLÉ - Permis

Le présent document et l'information qu'il contient sont disponibles pour examen en vue de l'obtention des permis. Tous droits réservés par Énergie atomique du Canada limitée. Il est interdit de reproduire ou de transmettre, par quelque procédé que ce soit, y compris de photocopier ou d'enregistrer, toute partie du présent document, sans une autorisation écrite du propriétaire du copyright obtenue auprès d'Énergie atomique du Canada limitée. De plus, on doit obtenir une telle autorisation avant qu'une partie du présent document ne soit intégrée dans un système de recherche documentaire de quelque nature que ce soit.

© Énergie atomique du Canada limitée

2251, rue Speakman
Mississauga (Ontario)
Canada L5K 1B2

AECL EACL

Release and Revision History / Liste des documents et des révisions

0939B Rev. 13

Document Details / Détails sur le document

Title / Titre	Total no. of pages / Nbre total de pages
The Technology of On-Power Fueling	

CONTROLLED Licensing - CONTRÔLÉ Permis

Release and Revision History / Liste des documents et des révisions

Release Document No./N°	Release Document Date	Revision Révision No./N°	Revision Révision Date	Purpose of Release; Details of Rev./Amendement Objet du document; détails des rév. ou des modif.	Prepared by Rédigé par	Reviewed by Examiné par	Approved by Approuvé par
1		D1	03/07/28	Issued for Review and Comment as 108-35000-REPT-001.	M.D. Damario	C.D. Francis R. Anderson M. Bonechi D. Grossman V. Langman M. Leger A.M. Manzer M.R. Soulard	
2		0	03/09/12	Issued as “Approved for Use”.	M.D. Damario	C.D. Francis	J. Millard

DCS/RMS Input / Données SCD ou SGD

Rel. Proj. Proj. conn.	Project Projet	SI	Section	Serial Série	Sheet Feuille No. N°	Of De	Unit No.(s) Tranche n°
	108	35000	LS	001	1	1	

dsfpdfmb

TABLE OF CONTENTS

SECTION **PAGE**

1. INTRODUCTION 1-1

1.1 Acronyms 1-3
1.2 Definitions 1-3

2. DESCRIPTION OF FUEL HANDLING EQUIPMENT 2-1

2.1 Introduction 2-1
2.2 Principal Interfaces 2-1
2.2.1 Fuel 2-1
2.2.2 Fuel Channels 2-1
2.3 New Fuel Handling and Storage 2-2
2.3.1 System Description 2-2
2.3.2 Descriptions of Major Components 2-3
2.3.3 System Operation 2-3
2.4 Spent Fuel Handling and Storage 2-3
2.4.1 System Description 2-3
2.4.2 Description of Major Components 2-4
2.4.2.1 Spent Fuel Transfer Equipment 2-4
2.4.2.2 Spent Fuel Storage Equipment and Tools 2-5
2.4.2.3 Defective Fuel Handling Equipment 2-5
2.4.3 System Operation 2-6
2.5 Fuel Changing System 2-6
2.5.1 System Description 2-7
2.5.2 Description of Major Components 2-7
2.5.2.1 Fueling Machine Head 2-7
2.5.2.2 Fueling Machine Bridge, Carriage, And Cable and Hose Management System 2-8
2.5.2.3 FM Process System 2-8
2.5.3 System Operation 2-9
2.6 Fuel Handling Control System 2-11
2.6.1 General 2-11
2.6.2 Control Console 2-11
2.6.2.1 Fuel Handling Display System 2-11
2.6.2.2 Fuel Handling Operator's Console 2-12
2.6.2.3 Fuel Handling Back-up Control Panel 2-12
2.6.3 Fuel Handling Control System 2-12
2.6.3.1 Fuel Handling Distributed Control System 2-12
2.6.3.2 Seismic Trip System 2-13
2.6.3.3 Protective Interlock System 2-13
2.6.4 Termination Rack 2-13
2.6.5 Control Cables 2-13
2.6.6 Signal Voltages 2-14

TABLE OF CONTENTS

SECTION **PAGE**

3. ON-POWER FUELING BENEFITS 3-1

3.1 Introduction 3-1
3.2 Contribution to High Capacity Factor 3-1
3.3 Low Excess Reactivity 3-1
3.4 Flexibility in Planning Outage Activities 3-1
3.5 Minimization of Fission Products in Reactor Coolant System 3-2
3.6 Low Fuel Cost 3-2
3.7 Fuel-Cycle Flexibility 3-2

4. OPERATION AND MAINTENANCE 4-1

4.1 Operational History 4-1
4.2 Physics, Thermalhydraulics and Fuel Performance 4-2
4.3 Maintenance 4-4
4.4 Staffing 4-5
4.5 Fueling Machine Recovery 4-5
4.6 Availability 4-5

5. STANDARDS AND SAFETY 5-1

5.1 Introduction 5-1
5.2 Standards 5-3
5.2.1 Applicable Codes and Standards 5-3
5.2.2 Purpose 5-3
5.2.3 Description 5-4
5.2.3.1 General Requirements for Pressure-Retaining Systems and Components in CANDU Nuclear Power Plants (CSA N285.0) 5-4
5.2.3.2 Requirements for Class 1C, 2C and 3C Pressure-Retaining Components and Supports in CANDU Nuclear Power Plants (CSA N285.2) 5-4
5.2.3.2.1 Fueling Machine Supports 5-5
5.2.3.2.2 Reinforced Elastomeric Hose Assemblies 5-5
5.2.3.2.3 Reactor Fuel Channel Closure Safety Lock 5-5
5.2.3.2.4 FM to Channel Coupling Interlock 5-5
5.2.3.2.5 Threaded Connections 5-5
5.2.3.3 Requirements for Containment System Components in CANDU Nuclear Power Plants (CSA N285.3) 5-6
5.2.3.3.1 Vessels 5-6
5.2.3.3.2 Airlocks and Transfer Chambers 5-6
5.2.3.3.3 Seal Plates 5-6
5.2.3.3.4 Electrical and Mechanical Penetration Assemblies 5-6
5.2.3.3.5 Flexible Bellows and Seals 5-6
5.2.3.4 Design Procedures for Seismic Qualification of CANDU Nuclear Power Plants (CSA N289.3) 5-6

TABLE OF CONTENTS

SECTION **PAGE**

5.3 Operational Safety Experience 5-7
5.3.1 Review of Actual Accidents and Incidents 5-7
5.3.2 Fueling Machine Events 5-7
5.3.2.1 Fueling Machine On-Reactor 5-7
5.3.2.2 Fueling Machine to End Fitting Interface Failure 5-8
5.3.2.3 Fueling Machine Off-Reactor 5-9
5.3.2.4 Fuel Failure Outside Reactor and Fueling Machine 5-10
5.3.2.5 Non-Generic Fueling Machine Events 5-11
5.3.2.6 Summary of Past Operational Experiences 5-11
5.4 Probabilistic Safety Analysis of Fuel Handling Events 5-12
5.4.1 Events Considered for Reliability Studies 5-12
5.5 Deterministic Analyses of Postulated Accidents 5-12
5.5.1 Accidents to be Analyzed 5-12
5.5.2 Methods of Analysis 5-13
5.5.3 Fuel Storage and Nuclear Criticality 5-13
5.5.4 Events with Fueling Machine On-Reactor 5-14
5.5.5 End Fitting Damage Caused by Fueling Machine In-Transit 5-15
5.5.6 Loss of Fuel Cooling in a Fueling Machine Off-Reactor 5-15
5.5.7 Uncontained Fuel Heatup 5-15
5.5.8 Spent Fuel Bay Incidents 5-16
5.5.9 Seismic Events 5-16
5.5.10 Summary of Consequence Analyses 5-17
5.6 Conclusions 5-17

6. ACR SPECIFIC FEATURES 6-1

6.1 Improved Channel Closure and Guide Sleeve Elimination 6-1
6.2 Improved Drives 6-1
6.3 FARE Tool Elimination 6-2
6.4 Emergency FM Water Supply 6-2
6.5 Improved Spent Fuel Transfer 6-2
6.6 Criticality 6-3
6.7 Fuel Bundle Shift 6-3
6.8 Shutdown Defueling 6-3

7. CONCLUSIONS 7-1

8. REFERENCES 8-1

TABLE OF CONTENTS

SECTION **PAGE**

TABLES

Table 5-1 Dose and Release Limits 5-19
Table 5-2 Dose Limits in Effect for Earlier CANDU 6 Stations 5-19
Table 5-3 Representation of the International Nuclear Event Scale (INES) 5-20

FIGURES

Figure 2-1 ACR-700 Fuel Handling Layout 2-15
Figure 2-2 CANFLEX Fuel Bundle 2-16
Figure 2-3 ACR-700 Fuel Channel Assembly 2-17
Figure 2-4 New Fuel and Spent Fuel Transfer Mechanisms 2-18
Figure 2-5 ACR-700 FM Bridge and Carriage 2-19
Figure 2-6.1 ACR-700 Two Bundle Fuel Changing Sequence 2-20
Figure 2-6.2 ACR-700 Two Bundle Fuel Changing Sequence 2-21
Figure 2-7 End View of ACR-700 2-22
Figure 4-1 ACR-700 Reactivity-Mechanism Deck Plan View 4-7
Figure 4-2 Bundle-Power Profile in ACR-700 vs. CANDU 6 4-8
Figure A-1 Fuel Handling Sequence A-83
Figure A-2 CANDU 6 Fuel Handling System A-84
Figure A-3 Fuel Channel Assembly A-85
Figure A-4 Simplified Diagram of CANDU Reactor A-86
Figure A-5 FAF 8-Bundle Fuel Changing Sequence A-87
Figure A-6 37 Element Fuel Bundle A-88
Figure A-7 New Fuel Room Equipment A-89
Figure A-8 New Fuel Bundle Spacer Interlock Gauge A-90
Figure A-9 New Fuel Transfer Mechanism A-91
Figure A-10 Airlock Valve A-92
Figure A-11 New Fuel Magazine Drive A-93
Figure A-12 Shield Plug In New Fuel Port A-94

TABLE OF CONTENTS

SECTION **PAGE**

Figure A-13 Shield Plug in New Fuel Mechanism Magazine A-95
Figure A-14 New Fuel Port Assembly A-96
Figure A-15 Fueling Machine Head and Support Cradle Assembly A-97
Figure A-16 Fueling Machine Head (Sectional View) A-98
Figure A-17 Fueling Machine at New Fuel Port A-99
Figure A-18 Fueling Machine Traversing onto Bridge A-100
Figure A-19 Fueling Machine at Reactor Face A-101
Figure A-20 Fueling Machine Leaving Reactor Face A-102
Figure A-21 Fueling Machine at Irradiated Fuel Port A-103
Figure A-22 Snout Assembly A-104
Figure A-23 Fueling Machine Head Snout Assembly (Sectional View) A-105
Figure A-24 Magazine Assembly Fueling Machine Head A-106
Figure A-25 Magazine Drive System A-107
Figure A-26 Magazine Emergency Drive Gearbox A-108
Figure A-27 Fueling Machine Separator A-109
Figure A-28 Operation of Side Stop, Sensor and Pusher A-110
Figure A-29 Ram Assembly – Exploded View A-111
Figure A-30 Ram Assembly – Front End A-112
Figure A-31 Ram Assembly – Rear End A-113
Figure A-32 Ram Head A-114
Figure A-33 'B' Ram and Mechanical Drive A-115
Figure A-34 'B' Ram/Latch Ram Manual Drive Assembly A-116
Figure A-35 Hydraulic 'C' Ram and Drive (Schematic) A-117
Figure A-36 Fueling Machine 'C' Ram Tape Drive Assembly A-118
Figure A-37 Ram Adapter and Operation A-119
Figure A-38 Guide Sleeve and Insertion Tool A-120
Figure A-39 Guide Sleeve Latch Ring Operation A-121
Figure A-40 Guide Sleeve and Tool Positions A-122
Figure A-41 Snout Plug A-123
Figure A-42 Operation of Snout Plug A-124

TABLE OF CONTENTS

SECTION **PAGE**

Figure A-43 Coolant Channel Closure A-125
Figure A-44 Coolant Channel Shield Plug A-126
Figure A-45 FARE Tool Assembly A-127
Figure A-46 Fueling Machine Bridge Assembly A-128
Figure A-47 Carriage/Fueling Machine Assembly A-129
Figure A-48 Fueling Machine Carriage Assembly A-130
Figure A-49 Catenary System Assembly A-131
Figure A-50 General Arrangement of Fueling Machine Bridge, Carriage and Catenary A-132
Figure A-51 Fueling Machine D_2O System Basic Flow A-133
Figure A-52 Fueling Machine Magazine Supply Line A-134
Figure A-53 Fueling Machine Ram C Hydraulic Control Circuit A-135
Figure A-54 Fueling Machine Separators Control Circuit A-136
Figure A-55 Fueling Machine Snout Cavity Leak Detection Circuit A-137
Figure A-56 Fueling Machine Oil Hydraulic System Block Diagram A-138
Figure A-57 Fueling Machine Magazine Drive A-139
Figure A-58 Fueling Machine Ram B Drive Speed and Force Control A-140
Figure A-59 Fueling Machine Snout Clamp A-141
Figure A-60 Fueling Machine Carriage-to-Bridge Clamps A-142
Figure A-61 Reactor and Irradiated Fuel Bays A-143
Figure A-62 Irradiated Fuel Port A-144
Figure A-63 Irradiated Fuel Discharge Equipment A-145
Figure A-64 Irradiated Fuel Transfer Equipment A-146
Figure A-65 Semi-Automated Fuel Handling System A-147
Figure A-66 Irradiated Fuel Handling Tools in Reception Bay A-148
Figure A-67 Defected Fuel Temporary Storage and Canning Equipment A-149
Figure A-68 Defected Fuel Handling Equipment A-150
Figure A-69 Storage Basket A-151
Figure A-70 Interim Dry Storage Concrete Canister A-152
Figure A-71 Dry Storage Basket Loading Equipment A-153
Figure A-72 Fuel Handling and Storage Operations A-154

TABLE OF CONTENTS

SECTION **PAGE**

Figure A-73 Shielded Work Station Installation A-155

APPENDICES

Appendix A Description of CANDU 6 On-Power Fueling System A-1
A.1 Introduction A-1
A.1.1 Purpose of the Fuel Handling System A-2
A.1.2 System Description A-2
A.1.2.1 Introduction A-2
A.1.2.2 New Fuel Transfer A-2
A.1.2.3 Fuel Changing System A-2
A.1.2.4 Irradiated Fuel Transfer A-3
A.1.2.5 Fuel Handling Control A-4
A.1.3 Operating Principles A-5
A.1.3.1 Duty Cycle A-5
A.1.3.2 Approach to Equilibrium Burn-up A-6
A.2 New Fuel Transfer and Storage System A-6
A.2.1 Introduction A-6
A.2.2 Purpose A-6
A.2.3 System Description A-7
A.2.3.1 Storage and Handling up to the New Fuel Transfer Room A-7
A.2.3.2 New Fuel Transfer Room A-7
A.2.3.3 Transfer to FM A-8
A.2.4 Equipment Description A-9
A.2.4.1 Jib Cranes A-9
A.2.4.2 Air Balance Hoist A-9
A.2.4.3 Bundle Lifting Tool A-9
A.2.4.4 Fuel Spacer Interlocking Gage A-9
A.2.4.5 Loading Trough and Loading Ram A-10
A.2.4.6 Air Lock Gate Valve A-10
A.2.4.7 New Fuel Transfer Mechanism Magazine A-10
A.2.4.8 Transfer Ram and Drive A-11
A.2.4.9 Magazine/Port Adaptor A-11
A.2.4.10 New Fuel Port A-12
A.2.4.11 Local Control Panel A-12
A.3 Fueling Machine Head - General A-12
A.3.1 Introduction A-12
A.3.2 Purpose A-12
A.3.3 System Description A-13
A.3.4 Equipment Description A-14
A.4 FM Snout A-15
A.4.1 Purpose A-15
A.4.2 Equipment Description A-15

TABLE OF CONTENTS

SECTION **PAGE**

A.4.2.1 Snout Center Support and Seal A-16
A.4.2.2 Snout Clamping Mechanism A-16
A.4.2.3 Snout Emergency Lock Assembly A-17
A.4.2.4 FM Antenna Assembly A-17
A.4.2.5 Snout Probes A-17
A.5 FM Magazine Assembly A-18
A.5.1 Purpose A-18
A.5.2 Equipment Description A-18
A.5.2.1 Magazine Housing Assembly A-18
A.5.2.2 Magazine Rotor Assembly A-19
A.5.2.3 Rotor Shaft and Drive Unit A-19
A.5.2.3.1 Rotor Shaft Support A-19
A.5.2.3.2 Balanced Shaft Seal A-19
A.5.2.3.3 Drive Unit A-20
A.5.2.3.4 Magazine Emergency Drive A-20
A.5.2.4 Magazine D_2O Level Drain Assembly A-20
A.5.2.4.1 D_2O Discharge Port A-21
A.6 Separator Assembly A-21
A.6.1 Purpose A-21
A.6.2 Component Description A-22
A.6.2.1 Feeler A-22
A.6.2.2 Pusher A-22
A.6.2.3 Side Stops and Safety Latch A-23
A.7 FM Ram Assembly A-23
A.7.1 Purpose A-23
A.7.2 Equipment Description A-24
A.7.2.1 Ram Housing A-24
A.7.2.2 Ram Head Assemblies A-24
A.7.2.3 Ball Screws A-24
A.7.3 'B' Ram A-25
A.7.3.1 'B' Ram Drive Unit A-25
A.7.3.2 'B' Ram Manual Drive A-25
A.7.3.3 'B' Ram Potentiometer Assembly A-26
A.7.4 Latch Ram A-26
A.7.4.1 Latch Ram Drive A-26
A.7.4.2 Latch Ram Potentiometer Assembly A-26
A.7.5 Motivation Of 'B' Ram and Latch Ram A-26
A.7.5.1 Combined 'B' Ram and Latch Ram Motion A-26
A.7.5.2 Latch Ram Motion with 'B' Ram Stationary A-27
A.7.6 'C' Ram A-27
A.7.6.1 'C' Ram Drive A-28
A.7.6.2 Tape Anchor Assembly A-28
A.7.6.3 Tape Drive Assembly A-28

TABLE OF CONTENTS

SECTION		PAGE
A.7.7	Ram Positioning	A-29
A.8	FM Ram Adaptor	A-29
A.8.1	Purpose	A-29
A.8.2	Component Description	A-29
A.8.3	Operating Principles	A-29
A.8.3.1	Pick-up From Magazine Station	A-29
A.8.3.2	Deposition in Magazine Station	A-30
A.9	FM Guide Sleeve Assembly	A-30
A.9.1	Purpose	A-30
A.9.2	Component Description	A-30
A.9.2.1	Guide Sleeve	A-30
A.9.2.2	Guide Sleeve Insertion Tool	A-31
A.9.2.3	Locating Tube and Spacer	A-32
A.10	FM Snout Plug	A-33
A.10.1	Purpose	A-33
A.10.2	Component Description	A-33
A.11	Coolant Channel Closure	A-34
A.11.1	Purpose	A-34
A.11.2	Component Description	A-34
A.11.2.1	Closure Locking Mechanism	A-34
A.11.2.2	Safety Mechanism	A-35
A.11.2.3	Seal Disc	A-35
A.12	Coolant Channel Shield Plug	A-35
A.12.1	Purpose	A-35
A.12.2	Component Description	A-35
A.13	Flow Assist Ram Extension (FARE) Tool	A-37
A.13.1	Introduction	A-37
A.13.2	Description	A-37
A.13.3	Operation	A-38
A.14	FM Bridge	A-39
A.14.1	Purpose	A-39
A.14.2	Component Description	A-39
A.14.2.1	Bridge Assembly	A-39
A.14.2.2	Drive Unit Assembly	A-40
A.14.2.3	Instrumentation and Control	A-40
A.15	FM Carriage	A-41
A.15.1	Purpose	A-41
A.15.2	Component Description	A-41
A.15.2.1	Drive Unit Assembly	A-41
A.15.2.2	Gimbal Unit Assembly	A-42
A.15.2.3	Instrumentation and Control	A-43
A.16	Catenary System	A-43
A.16.1	Purpose	A-43

TABLE OF CONTENTS

SECTION **PAGE**

A.16.2 System Description A-43
A.16.2.1 Catenary Loop A-44
A.16.2.2 Catenary Trolley A-44
A.16.2.3 Flexible Hose and Cable Carriers A-45
A.16.2.4 'Z' Motion Loop A-45
A.16.2.5 Instrumentation and Control A-45
A.17 FM D_2O Control System A-46
A.17.1 Introduction A-46
A.17.2 Purpose A-46
A.17.2.1 Temperature Considerations A-46
A.17.3 System Description A-47
A.17.3.1 Introduction A-47
A.17.3.2 Magazine Supply Line A-47
A.17.3.3 Magazine Return Line A-48
A.17.3.4 Magazine Supply Pressures A-48
A.17.3.5 Shaft Seals Circuits A-49
A.17.3.6 Superflow Circuit A-49
A.17.3.7 'C' Ram Hydraulic Control Circuit A-49
A.17.3.8 Separators Control Circuit A-50
A.17.3.9 Snout Cavity Leak Detection Circuit A-51
A.17.3.10 Snout Clamp Lock Hydraulic Circuit A-51
A.17.3.11 D_2O Discharge Port Mechanisms A-52
A.17.4 Equipment Description A-52
A.17.4.1 Directional Control Valves A-52
A.17.4.2 Overhaul Relief Valve A-52
A.17.4.3 Pressure Reducing Valve PRV-1 ..... A-52
A.17.4.4 Piping and Tubing A-53
A.18 FM Oil Hydraulic System A-53
A.18.1 Introduction A-53
A.18.2 Purpose A-53
A.18.3 System Description A-53
A.18.3.1 Oil Hydraulic Power Supply System A-53
A.18.3.2 FM and Carriage Oil Hydraulic Control Circuits A-54
A.18.3.2.1 Magazine Drive A-54
A.18.3.2.2 'B' Ram Drive Speed and Force Control A-54
A.18.3.2.3 Latch Ram Drive A-55
A.18.3.2.4 Snout Clamp A-55
A.18.3.2.5 Ram Lube Pump Drive A-55
A.18.3.2.6 D_2O Valves A-55
A.18.3.2.7 'Z' Drive A-56
A.18.3.2.8 Fine 'Y' Drive A-56
A.18.3.2.9 Carriage to Bridge Clamps A-56
A.18.4 Major Equipment A-56

TABLE OF CONTENTS

SECTION **PAGE**

A.18.4.1 Oil Reservoir A-56
A.18.4.2 Supercharge and High Pressure Pumps A-57
A.18.4.3 Strainers and Filters A-57
A.18.4.4 Heat Exchanger and Accumulator A-57
A.18.4.5 Piping and Tubing A-57
A.18.4.6 Location A-57
A.18.4.7 Instrumentation and Control A-57
A.19 Irradiated Fuel Transfer and Storage System A-58
A.19.1 Introduction A-58
A.19.2 Purpose A-58
A.19.3 System Description A-59
A.19.3.1 Irradiated Fuel Transfer and Handling System A-59
A.19.3.1.1 Normal Operation A-59
A.19.3.1.2 Abnormal Operation A-60
A.19.3.1.2.1 Stuck Fuel Bundles A-60
A.19.3.1.2.2 Semi-Automated Irradiated Fuel Handling Equipment Out of Service A-61
A.19.3.2 Defected Fuel Transfer and Handling System A-61
A.19.4 Equipment Description A-61
A.19.4.1 Irradiated Fuel Ports A-61
A.19.4.2 Elevating Ladles and Drives A-62
A.19.4.3 Discharge Bay/Reception Bay Conveyor A-64
A.19.4.3.1 Rack and Cart A-65
A.19.4.3.2 Conveyor Track A-65
A.19.4.3.3 Drive Train A-65
A.19.4.4 Semi-Automated Irradiated Fuel Handling Equipment A-66
A.19.4.4.1 General Arrangement A-66
A.19.4.4.2 Carriage A-67
A.19.4.4.3 Elevator A-67
A.19.4.4.4 J-Tool Assemblies A-67
A.19.4.5 Reception Bay Manual Defected and Irradiated Fuel Handling Equipment A-68
A.19.4.5.1 Transfer Rack Handling Tool A-69
A.19.4.5.2 Bundle Lifting Tool A-69
A.19.4.5.3 Rack Stand-Offs A-69
A.19.4.5.4 Storage Tray Support Table A-69
A.19.4.5.5 Tool for Lowering Empty Trays A-70
A.19.4.5.6 Storage Tray Lifting Tool A-70
A.19.4.5.7 Storage Tray Conveyor A-70
A.19.4.6 Storage Bay Equipment and Tools A-71
A.19.4.6.1 Storage Bay Manbridge A-71
A.19.4.6.2 Storage Trays A-71
A.19.4.6.3 Storage Tray Supports A-71

TABLE OF CONTENTS

SECTION **PAGE**

A.19.4.6.4 Storage Tray Lifting Tool A-72
A.19.4.7 Defected Fuel Handling Equipment in Discharge Bay A-72
A.19.4.7.1 Carousel A-72
A.19.4.7.2 Defected Fuel Can A-73
A.19.4.7.3 Canning Device A-73
A.19.4.7.4 Bundle Lifting Tool A-73
A.19.4.7.5 Lid Rack Handling Tool A-74
A.19.4.7.6 Elevating Table A-74
A.19.4.7.7 Can Handling Tool A-74
A.19.4.7.8 Lid Handling Tool A-74
A.19.4.8 Defected Fuel Storage Bay Handling Equipment A-74
A.20 Irradiated Fuel Dry Storage A-78
A.20.1 Introduction A-78
A.20.2 System Description A-79
A.20.2.1 Basket Loading A-79
A.20.2.2 Basket Drying and Welding A-79
A.20.2.3 Flask Transportation A-79
A.20.2.4 Concrete Canister Loading A-80
A.20.3 Equipment Description A-80
A.20.3.1 Fuel Basket A-80
A.20.3.2 The Fuel Bundle Tilter A-80
A.20.3.3 Shielded Welding Station A-81
A.20.3.4 Fuel Transport Flask A-81
A.20.3.5 Canister A-81
A.20.3.6 Canister Site Description A-82
A.21 Bibliography A-82

Appendix B Fueling Machine Recovery B-1

B.1 Introduction B-1
B.2 Snout Lock-Up B-1
B.3 Ram Assembly B-2
B.4 Mechanical Drives B-3
B.5 Emergency Drives B-3
B.6 Guide Sleeve Station B-4
B.7 Separator B-4
B.8 Grapples B-5
B.9 Fueling Machine Bridge Tilt B-5
B.10 Fueling Machine Bridge Vertical Drift B-6
B.11 Carriage Drive B-7
B.12 Hose Failure B-7
B.13 Conclusions B-7
B.14 Bibliography B-8

1. INTRODUCTION

The Advanced CANDU Reactor™* (ACR™) is a pressure tube reactor, which uses slightly enriched uranium (SEU) fuel, heavy water moderation, light water coolant and is refueled on-power (ref. 10810-01371-TED-001, Reference [1].

It is an evolutionary development based on CANDU®** reactors developed in Canada and licensed to operate in Canada and several other countries. The earlier CANDU reactors, however, use natural uranium fuel and heavy water coolant.

A CANDU reactor has large numbers of parallel fuel channels arranged on a square lattice rather than a single pressure vessel. The tubes are horizontally positioned in a calandria (tank) of heavy water moderator.

This report describes the ACR's fuel handling system along with its technology base, lists the benefits of on-power fueling and addresses some operation and maintenance topics. It also addresses safety and lists applicable Canadian standards. In addition, it identifies some of the main differences between the ACR and the earlier CANDU 6 (C6) fuel handling systems.

Section 2 provides a description of the ACRs fuel handling equipment.

The purpose of the fuel handling and storage system is to provide on-power fueling capability at a rate sufficient to maintain continuous reactor operation at full power.

The fuel handling system stores and handles fuel, from the arrival of new fuel to the storage of spent fuel. It is divided into the following functional parts:

- New fuel handling and storage, which involves the receipt, storage and inspection of new fuel bundles and the loading of new fuel bundles into a fueling machine via a new fuel port.
- Refueling, which involves the transportation of new fuel to and spent fuel from the reactor face via the fueling machine and the insertion of new fuel into and discharge of spent fuel from a fuel channel.
- Spent fuel handling and storage, which involves the discharge of spent fuel from the fueling machine via a spent fuel port and the transfer of spent fuel to the spent fuel storage bay for short-term storage.

Section 3 describes the ACRs on-power fueling benefits. In order to refuel a LWR, it must be shut down, cooled down and depressurised. The ACR, on the other hand, can be refueled at full power without needing to be cooled down or depressurised. The benefits of on-power fueling are that it contributes to a high capacity factor, reduces available excess reactivity, provides more flexibility in planning shutdown activities, leads to improved reactor coolant chemistry, keeps fuel costs low, and allows more fuel-cycle flexibility.

Section 4 provides the an operational history of CANDU reactors, describes the ACR's physics, thermalhydraulics and fuel performance, discusses maintenance, staffing, fueling machine

---

* Advanced CANDU Reactor™ (ACR™) is a trademark of Atomic Energy of Canada Limited (AECL).

** CANDU® (CANada Deuterium Uranium) is a registered trademark of Atomic Energy of Canada Limited (AECL).

recovery and fuel handling system availability. Station incapability due to fuel handling is historically less than 1 %.

Section 5 identifies and describes applicable standards, discusses CANDU operational safety experience and the systems that mitigate postulated accidents

In the more than 450 reactor years of accumulated CANDU fuel handling experience, there has been no serious accident causing harm to the operators or the public. With earlier reactors some incidents with minor dispersal of activity, within or even outside containment occurred, and in some cases operators received more irradiation than permitted.

The evaluation of the probability of the conceived undesired events shows that fuel failures and fission product releases due to loss of cooling within a FM or due to fuel ejection to a vault floor are probable top events of the fuel handling system failures, but with very low frequencies of occurrence. The probabilistic predictions of the frequencies of occurrences are so far supported by those 450 years of operating experience. The probabilistic and deterministic analysis described in this section is based on existing CANDU stations. Further analysis will be performed to address ACR-specific scenarios. Based on design improvements added to ACR fuel handling, including increased redundancy, significant improvements, to the already acceptable analysis results, are expected.

The consequences of these low probability fuel handling system failures are predicted to be less severe than allowed by the government licensing regulatory guides. The deterministic analyses of postulated events have been supported by tests, and by the outcomes of the relatively minor fuel handling related incidents that have occurred at CANDU stations. For each CANDU station, safety analyses are completed to show that the operation of the fuel handling systems will not pose an unacceptable risk to the public. Epidemiological evidence suggests that neither the workforce nor the public has suffered from fuel handling (or any other CANDU) operation to date.

Section 6 describes ACR specific features. Many features of the CANDU 6 fuel handling system are applicable to the ACR design. Some of the main differences between the ACR and CANDU 6 fuel handling systems are:

- elimination of the guide sleeve and guide sleeve tool;
- electric drives in lieu of oil hydraulic drives;
- elimination of the FARE tool;
- Emergency FM water supply;
- wet transfer of spent fuel;
- higher reactivity fuel;
- 2-bundle shift rather than 8-bundle shift.

Appendix A provides a description of the CANDU 6 fuel handling system, while Appendix B describes the operational recovery aspects of the CANDU fuel handling system.

1.1 Acronyms

ACR	Advanced CANDU Reactor
CNSC	Canadian Nuclear Safety Commission
COG	CANDU Owners Group
C6	CANDU 6
DBE	Design basis earthquake
FARE	Flow assist ram extension
FCS	Fuel handling control system
FDS	Fuel handling display system
FH	Fuel handling
FM	Fueling machine
IAEA	International Atomic Energy Agency
LOCA	Loss of coolant accident
LOECI	Loss of emergency coolant injection
LWR	Light water reactor
MSLB	Main steam line break
NF	New fuel
NPD	Nuclear Power Demonstration
OECD	Organization for Economic Cooperation and Development
OPEX	Operating experience
PWR	Pressurized water reactor
RCS	Reactor coolant system
SEU	Slightly enriched uranium
SF	Spent fuel

1.2 Definitions

Heavy water: Water in which normal hydrogen isotopes are replaced by deuterium. Deuterium is an isotope of hydrogen composed of one proton and one neutron as opposed to only one proton. Heavy water is also known as D_2O. Heavy water is approximately 10% heavier than regular (light) water.

2. DESCRIPTION OF FUEL HANDLING EQUIPMENT

2.1 Introduction

The purpose of the fuel handling and storage system is to provide on-power fueling capability at a rate sufficient to maintain continuous reactor operation at full power. Figure 2-1 shows the overall ACR-700 fuel handling layout.

The fuel handling system stores and handles fuel, from the arrival of new fuel to the storage of spent fuel. It is divided into the following functional parts:

- new fuel handling and storage, which involves the receipt, storage and inspection of new fuel bundles and the loading of new fuel bundles into a fueling machine via a new fuel port
- refueling, which involves the transportation of new fuel to and spent fuel from the reactor face via the fueling machine and the insertion of new fuel into and discharge of spent fuel from a fuel channel
- spent fuel handling and storage, which involves the discharge of spent fuel from the fueling machine via a spent fuel port and the transfer of spent fuel to the spent fuel storage bay for short-term storage.

2.2 Principal Interfaces

2.2.1 Fuel

While current CANDU reactors are fuelled with natural uranium, the ACR uses slightly enriched uranium in an advanced CANFLEX®* fuel bundle. The current reference fuel design for the ACR is a 43-element modified Mark-5 CANFLEX fuel bundle and is shown in Figure 2-2. The 3 rings of 42 fuel elements contain a uniform enrichment of 2.1 wt% U^{235}, while the centre element contains a combination of natural uranium and 7.5 wt% dysprosium (Dy). The dysprosium in the centre element acts as a neutron absorber, which provides negative void reactivity (NVR) during postulated loss of coolant accidents (LOCAs). This bundle is compact: it is about 100 mm (4 in.) in diameter, 500 mm (19.5 in.) long and weighs about 23 kg (48 lbs).

2.2.2 Fuel Channels

The fuel channel assemblies locate and support a fuel string of twelve bundles inside the reactor and form part of the reactor coolant system (RCS). They are horizontal and arranged in a square pitch to form a circular lattice array, with a lattice pitch of 220 mm (8.66 in.). This is smaller than the current CANDU standard of 286 mm (11.25 in.). Figure 2-7 shows this circular lattice array. The internal diameter of the ACR fuel channel is 103 mm (4.06 in.), the same as that of current CANDU reactors. Individual calandria tubes surround each individual fuel channel. In addition to the dysprosium in the fuel, the reduced lattice pitch and larger diameter calandria tubes help achieve NVR by reducing the moderator volume. Figure 2-3 shows an ACR-700 fuel channel assembly.

---

* CANFLEX® is a registered trademark of AECL and the Korea Atomic Energy Research Institute (KAERI)

At each end of the pressure tube is a stainless steel end fitting, which allows connection to the fueling machines.

To permit on-power fueling, the ends of the reactor fuel channels are sealed with removable plugs, called channel closures. These channel closures seal against the RCS pressure and are removed and installed by the fueling machines.

Shield plugs attach in the bore of the end fitting, between the channel closures and the fuel bundles, and attenuate the radiation streaming out of the core through the channel and position the fuel bundles correctly in the fuel channel.

The coolant flow in adjacent channels is in opposite directions (bi-directional flow).

2.3 New Fuel Handling and Storage

2.3.1 System Description

When the fuel arrives at the station, it is stored in a central storage room, which is common to all the units in the plant. This room accommodates the normal station inventory, and also temporarily stores the fuel for the initial reactor core load. When required, new fuel is transported to the new fuel room in the reactor auxiliary building, where the individual bundles are identified, inspected, and loaded manually into the magazine of the new fuel transfer mechanism. Refer to Figure 2-1, which shows the overall fuel handling and storage layout.

Two new fuel transfer mechanisms are provided to supply new fuel to the two fueling machines. Each mechanism consists of a totally enclosed magazine, a transfer ram, a fuel loading ram and trough, a new fuel port, and a transfer pipe that connects the magazine to the new fuel port. Containment and isolation valves are provided at the new fuel port and at the front of the new fuel magazine, to permit the loading of the new fuel magazine and transfer to the fueling machine magazine without breaching containment. Refer to Figure 2-4, which shows the layout of the new fuel transfer (and spent fuel transfer) equipment.

The new fuel transfer system is provided with an inert gas supply and ventilation sub-system, to prevent the spread of contamination into the new fuel room. When the new fuel transfer mechanism is inactive, or when new fuel transfer is in progress, a pressure slightly above reactor building pressure is maintained in the new fuel magazine. After completion of new fuel (NF) transfer to the FM magazine, the NF magazine will be exhausted to the contaminated air ventilation system. When new fuel loading is in progress, a pressure slightly below atmospheric is maintained in the new fuel magazine, through a connection to the active clean air ventilation system. Any liquid, which accumulates in the magazine housing, is drained into the active drainage system.

A shield plug, located in the new fuel port, reduces radiation streaming into the new fuel transfer room when a fueling machine containing spent fuel passes by the new fuel port. Interlocks and radiation activated alarm signals prevent inadvertent removal of the shield plug under this condition, even though new fuel loading is not normally carried out with spent fuel in the fueling machine. The plug is removed from the port and stored in the new fuel magazine prior to the transfer of new fuel into the fueling machine.

A local control panel is mounted on each new fuel transfer mechanism and provides a number of control functions: local controls for the loading of new fuel into the new fuel transfer mechanism

magazine, and an operator initiated permissive (push button) to allow for the remote transfer of new fuel from the new fuel transfer mechanism into the fueling machine magazine. The loading of fuel into the transfer mechanism is controlled by the local operator and can be performed either automatically with some manual intervention, or manually. The transfer of fuel from the new fuel transfer mechanism into the fueling machine magazine is controlled by the fuel handling operator in the main control room, and can be performed with various degrees of automation, from fully automatic to manual. However, remote operations, from the main control room, are interlocked with a permissive signal from the local operator.

2.3.2 Descriptions of Major Components

Isolation is provided between the loading trough and the new fuel transfer mechanism magazine, to isolate the magazine whenever fuel is not being loaded into the magazine, and to provide a closed system whenever the new fuel port containment valves are open during new fuel transfer to the fueling machine.

The transfer mechanism magazine assembly consists of a leak-tight housing, a rotor, and a drive unit. The magazine housing is a drum-like enclosure with a normally closed drain connection to the active drainage system and a vent to the vapour recovery system to remove any contamination through purging. The shield plug, which is normally located in the new fuel port, reduces radiation streaming into the new fuel transfer room when the fueling machine containing spent fuel passes the end of the new fuel port in the fueling machine maintenance lock.

Embedded in the reactor building wall of each fueling machine maintenance lock are the new fuel ports. The port is a tubular connection with one end fitting extending into the maintenance lock and the other end engaging with the new fuel transfer mechanism via dual containment isolation valves. When loading new fuel into a fueling machine, the new fuel port becomes the passageway for bundle movement from the fuel transfer mechanism to the fueling machine.

Dual valves between the new fuel port and the transfer mechanism magazine guarantee containment isolation.

2.3.3 System Operation

Once fuel has been moved into the new fuel transfer room, individual fuel bundles are unloaded. A special tool, called a fuel spacer interlocking gauge, is used for checking the diameter of each fuel bundle. Each bundle is also checked to be free of damage or foreign matter prior to loading and its serial number is recorded.

Loading of the fuel into the new fuel transfer magazine is divided into a series of steps, and the completion of each step is a permissive for the one following.

The transfer of fuel bundles from the new fuel transfer magazine to the fueling machine magazine is normally performed under automatic computer control.

2.4 Spent Fuel Handling and Storage

2.4.1 System Description

The spent fuel transfer and storage system is responsible for the transport and storage of spent fuel from the time it is discharged from the fueling machine to the time the fuel is removed from

the spent fuel storage bay in preparation for dry fuel storage. The system consists of a transfer system and a storage system. Refer to Figure 2-1, which shows the overall fuel handling and storage layout.

There are two identical transfer systems. The system that services the A-side fueling machine discharges its spent fuel into the A-side reception bay. The system that services the C-side fueling machine discharges into the C-side reception bay, which is walled off from, but connected to the main fuel storage bay. Fuel is transferred between the A-side reception bay and the fuel storage bay via an underground shielded tunnel.

The transfer system is comprised of mechanical assemblies working in conjunction with a process system to transport fuel from inside the reactor building containment to the spent fuel reception bay. Referring to Figure 2-4, the mechanical portion consists of a magazine, a discharge ram, and a spent fuel basket loading mechanism, and the process system consists of pumps, a heat exchanger, a transfer tube and numerous isolation valves. Each transfer system includes a transfer tube, but they share the majority of the process equipment (pumps, heat exchangers, valves, etc.). The fuel travels through the transfer tube from the maintenance lock in the reactor building to the spent fuel transfer magazine, which sits in the spent fuel reception bay. The process system provides the circulating flow that pushes the fuel through the transfer tube, while at the same time cooling the fuel.

2.4.2 Description of Major Components

2.4.2.1 Spent Fuel Transfer Equipment

Embedded in the reactor building wall of each fueling machine maintenance lock are the spent fuel ports. The port is a tubular connection with one end fitting extending into the maintenance lock and the other end engaging with the spent fuel transfer tube, via dual containment isolation valves. When discharging spent fuel from a fueling machine, the spent fuel port becomes part of the passageway for bundle movement from the fueling machine to the spent fuel transfer mechanism.

Dual valves between the spent fuel port and the spent fuel transfer tube allow for containment isolation. These valves can only be opened if the FM is attached to the spent fuel port.

The transfer tube extends from the spent fuel transfer port to the spent fuel transfer mechanism in the spent fuel reception bay.

An isolation valve is provided between the spent fuel transfer tube and the spent fuel transfer mechanism magazine, to isolate the transfer tube from the transfer mechanism whenever fuel transfer is not in progress, and to isolate the spent fuel transfer process system from the spent fuel reception bay while spent fuel is being discharged from the transfer magazine. Another isolation valve is provided at the transfer mechanism discharge port, to isolate the magazine from the reception bay whenever fuel is not being discharged from the magazine, and to provide a closed system whenever the spent fuel port containment valves are open during spent fuel transfer.

The spent fuel transfer magazine is supported in the spent fuel reception bay and has its inlet side connected to the spent fuel transfer tube via an isolation valve. The magazine contains seven chambers: enough for a fuel channel's worth of fuel plus a spare chamber. Each magazine tube

will align with the magazine's discharge port at one end, and the discharge ram at the other, as the basket loading mechanism is indexed from one position to the next. Each of the magazine tubes can hold two fuel bundles.

The motors that drive the various mechanisms are mounted on a support frame located just above the spent fuel bay. They are connected to the drives by long shafts.

The transfer tube and magazine are part of one leg of the process system. The connections to the process piping are inboard of the transfer tube at the reactor building end, and at the transfer magazine at the reception bay end. Two centrifugal pumps (main and alternate) supply the flow (up to 25 kg/s) required to move the fuel through the transfer tube. A heat exchanger is provided, sized to remove the decay heat from an entire maximum power channel's worth of fuel. A number of motorized valves provide containment isolation. The majority of the process equipment is skid mounted.

Inside the tunnel that connects the A-side reception bay to the fuel storage bay, a trolley transports storage baskets between the two bays. The trolley is driven through a set of drive shafts by a motor located above the surface of the water.

2.4.2.2 Spent Fuel Storage Equipment and Tools

The storage system consists of baskets, stacking frames, a manbridge, and miscellaneous manually operated tools that are used to manipulate the fuel and storage baskets from above the bay.

The fuel bundles that are discharged from the spent fuel transfer mechanism, are loaded into baskets, which act as containers for the fuel, providing mechanical protection, preventing criticality, and allowing for convective cooling by the water in the bay. The baskets are designed to be stacked, but require lateral support when stacked more than two high. The frames serve the function of lateral support for stacks of baskets.

Normally, the fuel is transferred from the spent fuel transfer mechanism magazine to the baskets using an automated basket loading mechanism, however, a series of long handled tools and accessories are provided and can assist the handling of fuel bundles and storage baskets. The tools can be used to place the fuel in baskets and then to stack the baskets within the supporting frames during their residency in the storage bay. The long handles allow operators to carry out their work from the manbridge that operates above the bay.

The manbridge is an above-water structure that consists of a runway for a monorail hoist, an under-slung walkway, and a hoist mounted on an electrically driven trolley. It spans the storage bay and runs the full length of the bay.

2.4.2.3 Defective Fuel Handling Equipment

Defective fuel is retained in the spent fuel transfer magazine, approximately half a day to one day, until the amount of off-gassing drops. In the spent fuel reception bay, the defective fuel is isolated from the remainder of the fuel and placed under a hood so that the fission product gas can be directed toward an active gas management system. The fuel remains under the hood until fuel has cooled enough for it to be canned.

2.4.3 System Operation

To discharge spent fuel to the storage bay, the fueling machine is attached to the spent fuel port. The process pumps are started, and the containment valves and the isolation valve between the spent transfer tube and magazine are opened. Two fuel bundles are discharged from the fueling machine into the transfer tube. As soon as the fuel enters the flow, it is caught up and transported by the flow. When they enter the transfer magazine, the bundles decelerate to a stop because the flow disperses after it enters the magazine. Once the fuel is in the magazine, the magazine rotor is indexed so that an empty chamber is aligned with the transfer tube. Once all the fuel is in the magazine, the containment and isolation valves are closed. The bay valve is opened and the ram is used to discharge the fuel into the basket loading mechanism.

The basket loading mechanism transfers the two bundles that have been discharged from one magazine chamber, and loads them into two chambers of the basket. The process is repeated until all the fuel in the transfer magazine has been stored in the basket. Once the basket is full it is moved to an area of the reception bay designated as the buffer zone. The buffer zone is reserved for the fuel that has only been out of the reactor for a week. To ensure adequate cooling, fuel baskets that are in the buffer zone are not stacked more than two high. The baskets are eventually transferred to the fuel storage bay and stacked within the storage frames. Stack height is defined both by seismic loads and the heat transfer characteristics of the bundle stack.

The spent fuel bundles are expected to be stored in the storage bay for at least 10 years prior to transfer to dry storage. Note that dry storage equipment including the shielded workstation and on site dry storage facility, are outside the initial station supply scope but are typically contracted for at a later time. Each filled storage basket would be lifted directly into a shielded workstation, which overhangs the storage bay. Once in the shielded workstation, the basket would be dried and then sealed inside a spent fuel canister, which is an unshielded container filled with inert gas. The canister would be placed inside a shielded dry-transfer flask, which would be used to transfer it to the on-site dry storage facility. A suitable route is provided for transporting this flask from the spent fuel bay area to the on-site dry storage facility. Once at the on-site dry storage facility, the canister would be removed from the flask and stored in the facility, and the reusable dry-transfer flask would be returned to the spent fuel bay area.

At some point, the canisters would be transported to a permanent spent fuel repository in flasks licensed for cross-country transportation. Provisions are made in the storage bay area to facilitate equipment installation, and fuel handing associated with dry spent fuel storage.

2.5 Fuel Changing System

Fuel changing involves all equipment and activities that are required to transport fuel from the new fuel port to the reactor, load and unload fuel from the fuel channel, and to transport the discharged fuel from the reactor to the spent fuel port. This is performed with two fueling machines attached to the same channel. Refer to Figure 2-1, which shows the overall fuel handling and storage layout.

The on-channel operations of fuel changing are performed with the flow. This means that the fuel is removed at the downstream end of the fuel channel and the new fuel is inserted at the upstream end. Two bundles are exchanged at every fuel channel visit. This is referred to as a 2-bundle shift because the fuel string is “shifted” downstream by two fuel bundle lengths. The

two most downstream fuel bundles are discharged and two new fuel bundles are placed at the upstream end. Since the flow is bi-directional through the core, each fueling machine will handle either new or spent fuel, depending upon which channel is being fuelled.

Fueling is carried out at a rate of 5.6 bundles per full power day for daily fueling or 9.8 bundles per full power day if fueling 4 days per week.

2.5.1 System Description

Referring to Figure 2-5, the on-power fuel changing equipment consists of two identical fueling machine heads at each end of the reactor, suspended on a carriage from tracks on a bridge that extends the full length of the fueling machine vault. Vertical and horizontal traverse of the fueling machine is provided to allow access to all the fuel channel end fittings. Powered shielding doors separate the reactor vault from the maintenance lock and, when closed, allow access to the fueling machine in the maintenance lock while the reactor is operating. A process system supplies a flow of water to the fueling machine that cools any irradiated fuel that is stored in the fueling machine. An ancillary port allows access to the fueling machine internals from behind a shielding wall. A rehearsal facility is used to practice fueling operations without opening up the RCS. All of this equipment is located within the reactor building. All power and instrumentation cable as well as process hoses are connected to the fueling machine and carriage through a cable and hose management system.

2.5.2 Description of Major Components

2.5.2.1 Fueling Machine Head

The fueling machine head consists of four major assemblies: snout, magazine, separators, and ram.

The snout is located at the front of the fueling machine. It attaches and locks the fueling machine to the fuel channel or fuel transfer port forming a leak tight seal. When the fueling machine is not attached to the fuel channel or transfer port, the end of the snout is sealed with a snout plug.

Separators are located between the snout and the magazine rotor. The separators are used to sense the passage of the shield plug and fuel bundles into the magazine, and to separate the fuel bundles that are required to be discharged from the remainder of the fuel string.

The magazine contains a multi-chamber rotor that can hold 12 fuel bundles, fuel channel hardware and fueling machine hardware. Although a typical ACR fueling scheme involves refueling 4 fuel channels successively in 2-bundle shifts (8 fuel bundles total), the magazine is designed to accommodate a complete fuel channel's worth of fuel.

The ram, located immediately behind the magazine, transfers fuel and hardware in and out of the fuel channel. In addition, the front end of the ram provides the articulation necessary for the installation and removal of the channel closure, shield plug and the fueling machine snout plug.

The snout, magazine and ram mechanisms are driven by redundant electric servo motors.

2.5.2.2 Fueling Machine Bridge, Carriage, And Cable and Hose Management System

Two fueling machine bridge and carriage assemblies are provided, one at each face. As shown in Figure 2-5, the bridge spans the face of the reactor and it carries a carriage, which in turn supports the fueling machine head. The weight of the bridge is supported by four fixed columns that are located at the four corners of the bridge. The bridge sits on elevators that travel up and down the columns. The elevators are driven up and down the columns by ball screws. The vertical motion of the bridge provides the coarse Y-motion of the fueling machine.

With the bridge in its lowest position, the carriage-rails on the bridge are aligned with similar rails on the maintenance lock tracks, enabling the carriage with the fueling machine head to transfer from the reactor vault to the maintenance lock.

The carriage has a rotation drive that allows it to rotate the fueling machine 90 degrees so that it will fit inside the maintenance lock. Motion of the fueling machine towards and away from the reactor or transfer port end fittings is accomplished with an axial drive (Z-drive). A very slow short stroke vertical drive is provided for Y-position correction during the homing operation. A set of gimbals on the carriage allows fine homing by permitting the fueling machine to tilt in pitch and yaw as it advances over the end fitting. The carriage is driven until the measured angular misalignments with the end fitting are close to zero.

The bridge and carriage mechanisms are driven by electric servo motors.

The cable and hose management system, comprised of high-pressure hoses and electric power and instrumentation cables, connects the fueling machine and carriage to auxiliary systems. One end of the cable and hose system is fixed to one end of the maintenance lock track and the other end is fixed to the fueling machine carriage. In between them is a trolley to support the cables as the carriage moves away from the maintenance lock. An additional loop and cable track are provided to allow carriage rotation and Z-motion.

2.5.2.3 FM Process System

The fueling machine requires a supply of water at temperatures of typically about 40°C (104°F), and at pressures that vary according to the function being performed. The requirements may be divided under the following general headings:

- Process system water is used to control the magazine housing pressure. It also cools the spent fuel in the magazine.
- Process system water is used to fill the void in the ram housing created by the rams as they advance.
- Process system water provides injection flow into the reactor channel when the fueling machine is attached to a reactor end fitting and the channel closure is removed. This keeps the fueling machine cool and relatively uncontaminated.

During on–power fueling the water flow direction is always from both fueling machines into the reactor channel. Both FMs provide a combined normal injection flow of 2.5 L/s (40 U.S. gal/min) and the combined maximum injection flow is 3.8 L/s (60 U.S. gal/min). A reactor-grade water supply is therefore provided for the fueling machine head to ensure that the coolant chemistry remains within specification.

The fueling machine water system can be divided into two major subsystems: the fueling machine water supply subsystem and the fueling machine water control subsystem.

The fueling machine water supply subsystem consists of a high pressure supply valve station, a heat exchanger, centrifugal booster/circulation pumps, filters, a tank, and return pumps. There are provisions for alternate methods of supplying coolant flow to the fueling machine when off reactor in case of failure of the booster/circulation pumps.

High pressure is required only for on-power fuel changing operations. Pressurized water is supplied from the discharge of the RCS pressure and inventory control pump. The water temperature is reduced to near ambient, and the booster/circulation pump increases its pressure to slightly above the reactor channel end fitting pressure to provide injection flow. When the fueling machine is not coupled to a reactor channel or transfer port, it is operated at park pressure. Park pressure is accomplished by supplying pressurized water from the RCS pressure and inventory control pump, reducing its temperature to near ambient, and using the booster/circulation pump to provide flow.

When the fueling machine is coupled to the spent fuel transfer port, the return flow is circulated in a closed loop of the fuel handling system. The fueling machine booster/circulation pump provides flow to the fueling machine at low pressure for spent fuel transfer. When the fueling machine is coupled to the new fuel transfer port, circulating cooling water flow is not required.

The fueling machine water control subsystem consists of the fueling machine water valve station, related pumps and filters, and fueling machine head-mounted equipment. The fueling machine water valve station contains control valves that control the flow of water to the fueling machine, and process instrumentation.

The piping that connects the fueling machine to the water valve station consists of stainless steel tubing and high-pressure hoses. The equipment, which is mounted on the head, includes pumps, process instrumentation, valves, and other flow-limiting devices, which isolate lines in the event of a hose failure.

2.5.3 System Operation

The flexibility of the design permits several possible fueling schemes. A typical one is described below, in which four channels with coolant flow in the same direction, are refueled successively with new fuel from a single new fuel port visit prior to transferring the spent fuel to the SF storage bay. Similar schemes are possible in which one to six channels are refueled consecutively prior to spent fuel transfer to the bay. Other fueling schemes are possible in which NF is carried in both machines so that refueling can be carried out successively on channels with coolant flow in either direction.

The fuel changing sequence begins with one of the fueling machines accepting four pairs of new fuel from its new fuel port where new fuel is pushed into the fueling machine magazine from the transfer mechanism under remote control, from the main control room. The details of this operation are provided in Section 2.3.3.

If not already open, the shielding door is opened and the fueling machine bridge is lowered until it is at the same elevation as the maintenance lock tracks. The carriage travels along the

maintenance lock tracks, and transfers to the fueling machine bridge. The fueling machine is rotated ninety degrees to face the reactor.

The bridge is raised until the fueling machine snout is at the correct elevation. The bridge brakes are engaged and the power to the bridge is removed so that inadvertent bridge movement is prevented. The carriage moves until the snout is in front of the upstream end fitting of the target fuel channel. The fueling machine is advanced until the front of the snout is over the end of the end fitting. Misalignment of the snout end and end fitting will cause the fueling machine to pitch and/or yaw. The misalignment is corrected using the fine position drives. At the same time an identical FM, which has at least four empty fuel chambers in its magazine, is located at, and aligned with the downstream end of the same channel.

Referring to Figure 2-6, the fueling machines are advanced until they contact the end fittings. The machines attach and lock themselves to the end fittings forming a leak tight connection. The plugs in the snouts of the fueling machines are removed and the machines are pressurized to about 345 kPa (50 psi) higher than the channel pressure in order to facilitate injection flow into the channel. The temperature of the fueling machine process water is maintained at a lower temperature than that in the fuel channel and the injection flow is maintained to thermally isolate the fueling machine from the higher temperature of the RCS and to prevent crud from the channel entering the fueling machine. The channel closures that provide an in-bore seal inside the end of each channel are removed by the fueling machines and stored in the magazines. In this state, with the ends of the fuel channel open, the FMs become part of the RCS boundary containing the H_2O coolant at RCS pressure. Reactor coolant continues to flow uninterrupted through the channel to cool the fuel. In addition, H_2O coolant is injected into the channel from both FMs.

The shield plugs are removed. As the downstream shield plug is withdrawn, the fuel string follows because channel coolant flow pushes the fuel string downstream. The separator mechanism separates the fuel string from the shield plug and prevents it from entering the FM magazine while the shield plug is being stored. The FM allows the fuel string to enter an empty fuel chamber in a controlled manner, separates the first pair of bundles from the fuel string, and stores this pair in the magazine. The FM then re-installs the shield plug in the end-fitting, which locates the ten bundle fuel string correctly in the core. With the downstream shield plug installed, the other FM pushes a pair of new fuel bundles into the channel at the upstream end, and channel flow moves these two bundles to the fuel string. The upstream FM installs the shield plug, and the pressure differential across the channel is measured to verify channel flow. Both FMs install the channel closures and snout plugs, restoring the fuel channel to normal and isolating the FMs from the RCS.

After leak testing the channel closures and FM snout plugs, the FMs are unclamped and retracted away from the end fittings.

The fueling machines are relocated to the next fuel channel that has to be refueled and the refueling cycle is repeated. Refueling is repeated until four channels have been visited, at which point, the fueling machine containing spent fuel moves to the spent fuel port, while the one that previously contained the new bundles will normally stay at the reactor face in preparation for the next channel operation. Since the two FMs are identical, they can be used for either function. The choice depends on the direction of coolant flow, which is in opposite directions in adjacent

channels. The new fuel is always inserted at the upstream end and the spent fuel discharged at the downstream end.

Once the fueling machine is in the maintenance lock, the spent fuel is discharged into the spent fuel port. See Section 2.4.3 for details on spent fuel transfer.

The operations of the fueling machine can be monitored in the main control room using closed circuit TV cameras located in the reactor building.

2.6 Fuel Handling Control System

2.6.1 General

The overall fuel handling control and display system consists of two main systems: the fuel handling control system (FCS) and the fuel handling operator interface system. The FCS handles the control functions while the FH operator interface system handles the operator interface functions.

The advanced operator interface of the fuel handling display system (FDS) and the distributed nature of the FCS, with built-in diagnostics for easy troubleshooting and maintenance, contribute to reliable operation of the fuel handling system.

2.6.2 Control Console

The fuel handling operator interface system consists of the fuel handling display system, fuel handling operator's console and the fuel handling backup control panel.

2.6.2.1 Fuel Handling Display System

The fuel handling display system is part of the overall plant-wide display system, but is functionally independent of the rest of the display systems in the unit control centre. The fuel handling display system performs the following functions:

- Displays fuel handling system status and other relevant information
- Facilitates full automatic control
- Facilitates semi-automatic control of individual sequences and mechanisms
- Facilitates manual operation of individual devices
- Provides relevant fuel handling information to plant operators via the plant display system
- Acquires and displays relevant plant information for the fuel handling operators.
- Alarms
- Transfers and retrieves historical data
- Performs logging and reporting

The display system is based on the same distributed computer architecture as the plant display system and uses the same hardware and software.

2.6.2.2 Fuel Handling Operator's Console

The FH operator performs all normal, abnormal, and emergency control operations from the FH operator's control console. The FH operator's console is a sit-down type of console with a number of video display units, data entry devices, and pointing devices. The console has separate partitions for each reactor side of the FH system. Dedicated display units are provided for control displays and alarm displays. The same video display units are capable of displaying closed circuit television images from the reactor vault and fuel transfer areas. The console also provides hard copy facilities.

The normal mode of control for the fuel handling system is automatic with the fuel handling operator in the seismically qualified main control room supervising the fuel handling operations via color graphic displays on the fuel handling control console. Capability is also provided to allow the operator, on an interactive basis, to control operations either in a semi-automatic mode, or in a manual mode.

The manual mode allows the operator to exercise control over individual mechanisms including positioning to a setpoint and jogging in either forward or reverse directions.

A dedicated alarm interrogation facility is provided for FH alarms.

2.6.2.3 Fuel Handling Back-up Control Panel

The backup control panel is a hardwired seismically qualified panel provided for safety-related FH control and monitoring functions. It will allow the operator to place the fuel handling system into a safe state if there is a failure of the control system or the display system. Once the problem has been corrected, operations can resume at the fuel handling operator's console.

2.6.3 Fuel Handling Control System

The fuel handling control system handles the control of fuel changing and fuel transfer operations in automatic, semi-automatic and manual modes.

The FCS contains the following components:

- Fuel handling distributed control system (FH DCS)
- Protective interlock system
- Seismic trip system

2.6.3.1 Fuel Handling Distributed Control System

The fuel handling distributed control system is based on current control technology and functions independently of the plant distributed control system.

The system configuration is based on the concept of distributed control. A separate subsystem controller controls each fuel handling subsystem. The subsystem controller handles all control functions required for the subsystem and includes motion control, logic control and PID (proportional integral derivative) control. A dedicated controller is provided for the supervisory sequential control of fuel handling operations. The sequential controller co-ordinates the motion of the mechanisms through the subsystem controllers, while the actual motion control is carried out by the individual motion controllers.

The sequential controller and subsystem controllers are connected through redundant communication links to form a distributed control system. The control data and the fuel handling system status are sent to the fuel handling display system that provides the operator interface.

Each FH DCS partition includes an interface to the FDS. The interface performs the following functions:

- The acquisition of analogue and digital I/O (input/output) and calculated data from the FH DCS
- Acquisition of diagnostic information from the FH DCS
- Transfer of control modes, setpoints, control commands, and mechanism calibration information from the FDS
- Alarm detection and transfer of alarm data to the annunciation system in the main control room. The alarm data is also available for use in the operator displays, logs, and reports generated by the FDS

The FH DCS is provided with an engineer's work station for system configuration, development and debugging of control programs, and to troubleshoot the overall system.

2.6.3.2 Seismic Trip System

The seismic trip system ensures that no undesirable control actions take place during a seismic event. This system continuously monitors the seismic activity. If a seismic event is detected, the system removes power to various drives of the FH mechanisms to ensure that they do not spuriously operate.

2.6.3.3 Protective Interlock System

The interlock system is divided into two parts: operational interlocks and safety interlocks. In this context, safety interlocks are all interlocks that protect against malfunctions that have a nuclear safety, personnel safety, or high economic impact. All safety related interlocks are implemented through hardwired logic, and only the operational interlocks are implemented in software. Some of the safety interlocks can be defeated by a set of bypass handswitches located on the back-up control console, which can be operated if necessary with the appropriate authorization. Unless defeated, the protective system interlocks are operative in both automatic and manual modes of operation.

2.6.4 Termination Rack

All connections to and from the fuel handling equipment pass through a termination rack located in the control equipment room.

2.6.5 Control Cables

Cables between some of the assemblies in the control system are supplied with connectors to simplify installation and reduce construction, commissioning, and maintenance costs.

2.6.6 Signal Voltages

Mechanisms on the fueling machine, bridge and carriage are driven by electric motors. Machine performance is improved through the application of modern motion control technology and mechanism position sensors. The traditional potentiometers, used for sensing position in earlier CANDU plants have been replaced by resolvers and linear variable displacement transducers (LVDTs).

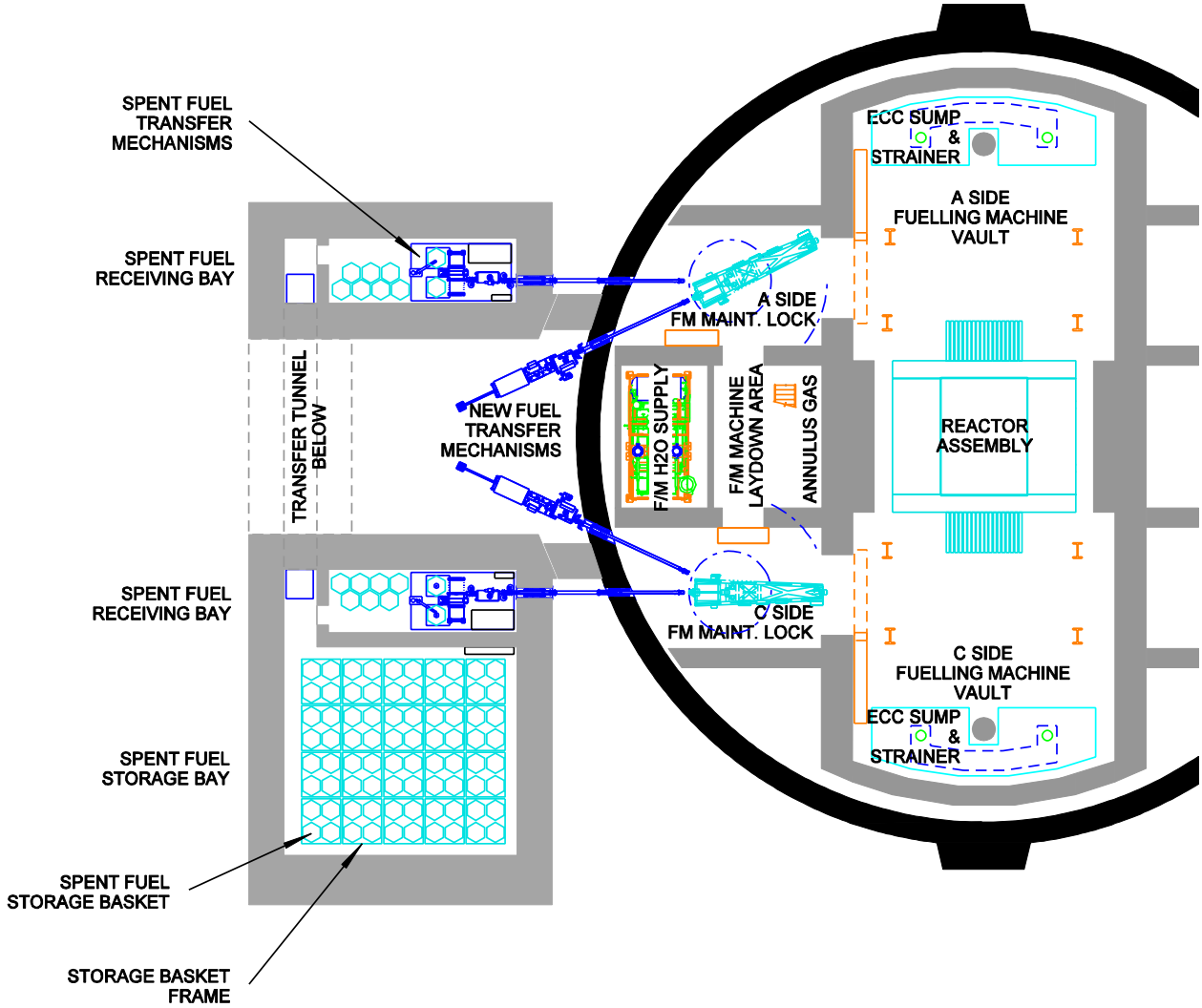

Figure 2-1 ACR-700 Fuel Handling Layout

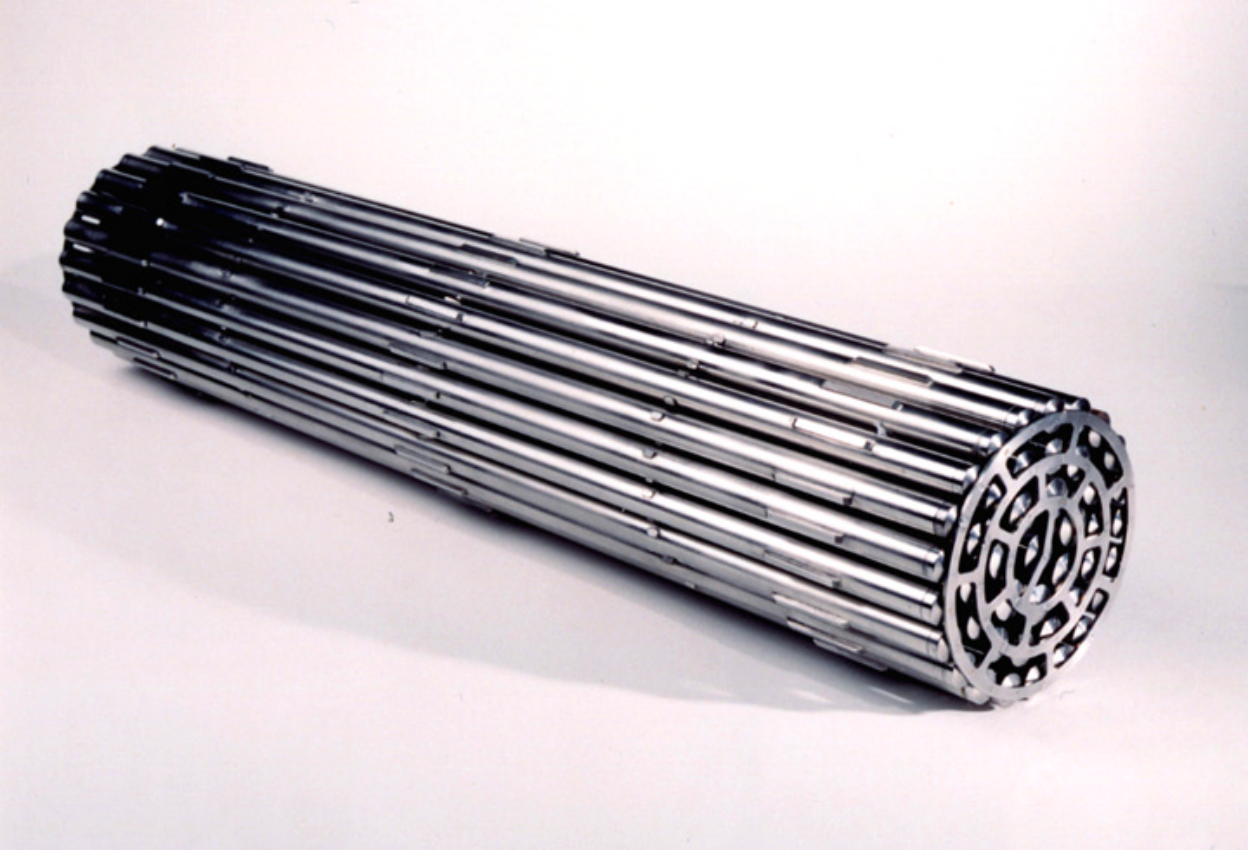

Figure 2-2 CANFLEX Fuel Bundle

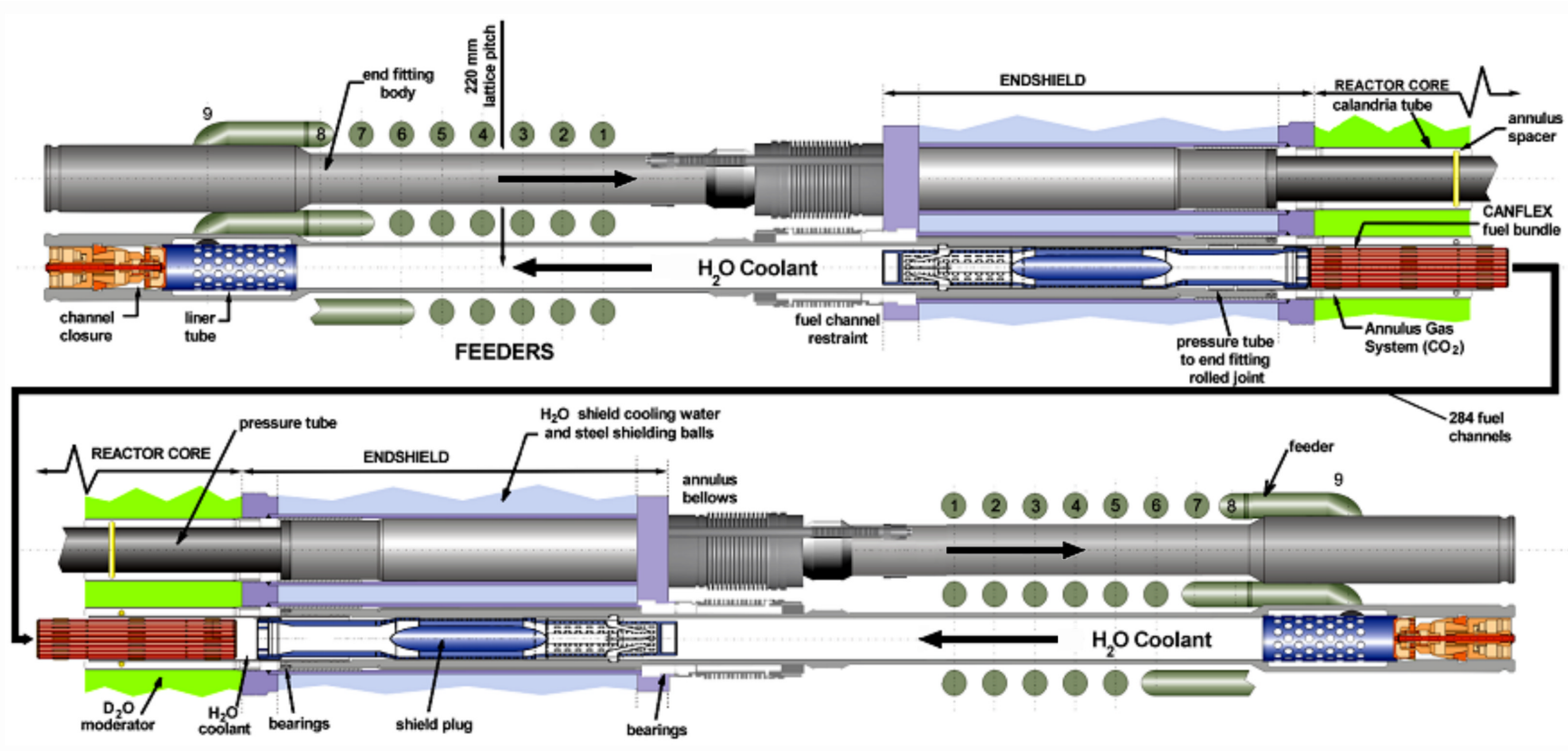

Figure 2-3 ACR-700 Fuel Channel Assembly

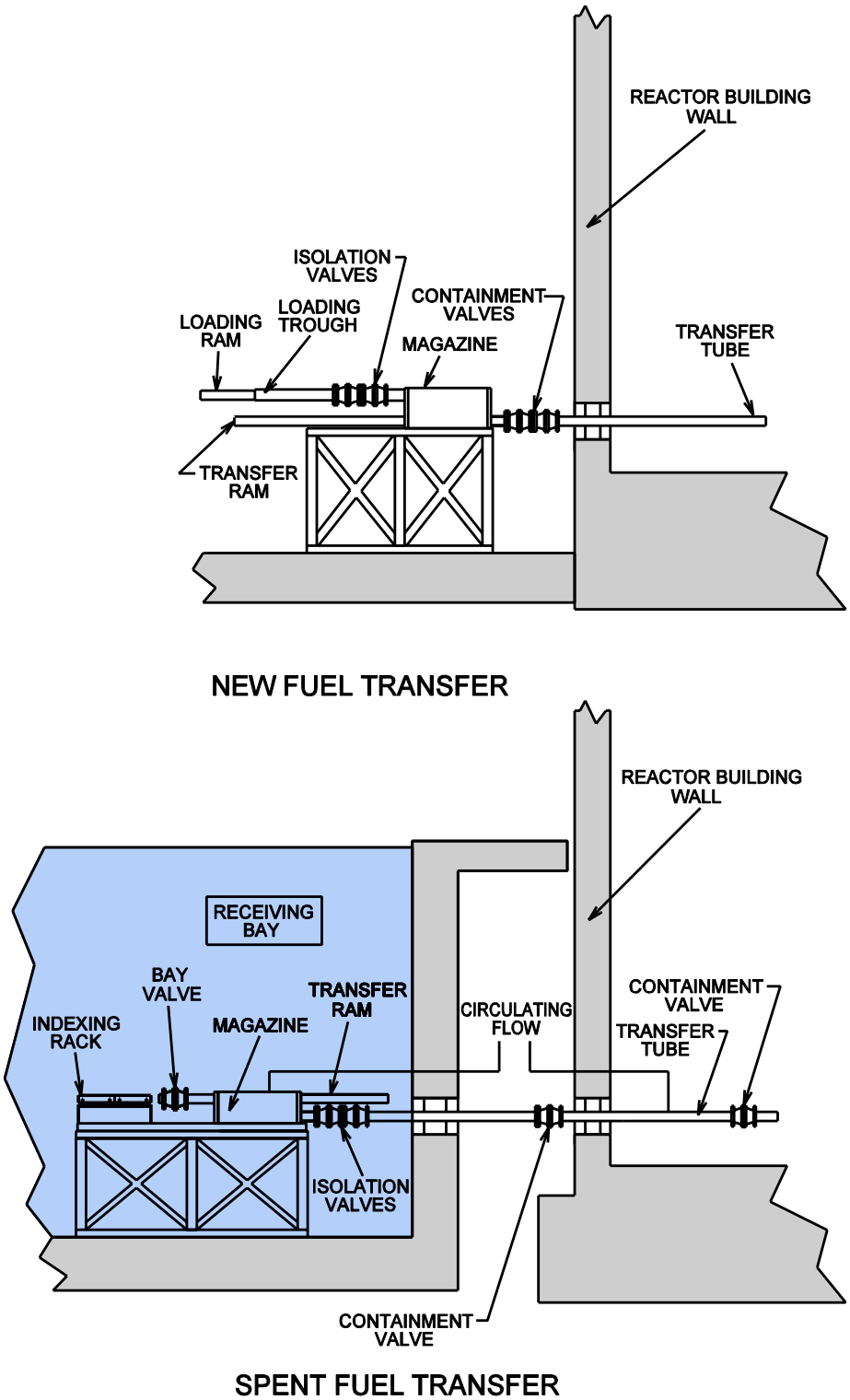

Figure 2-4 New Fuel and Spent Fuel Transfer Mechanisms

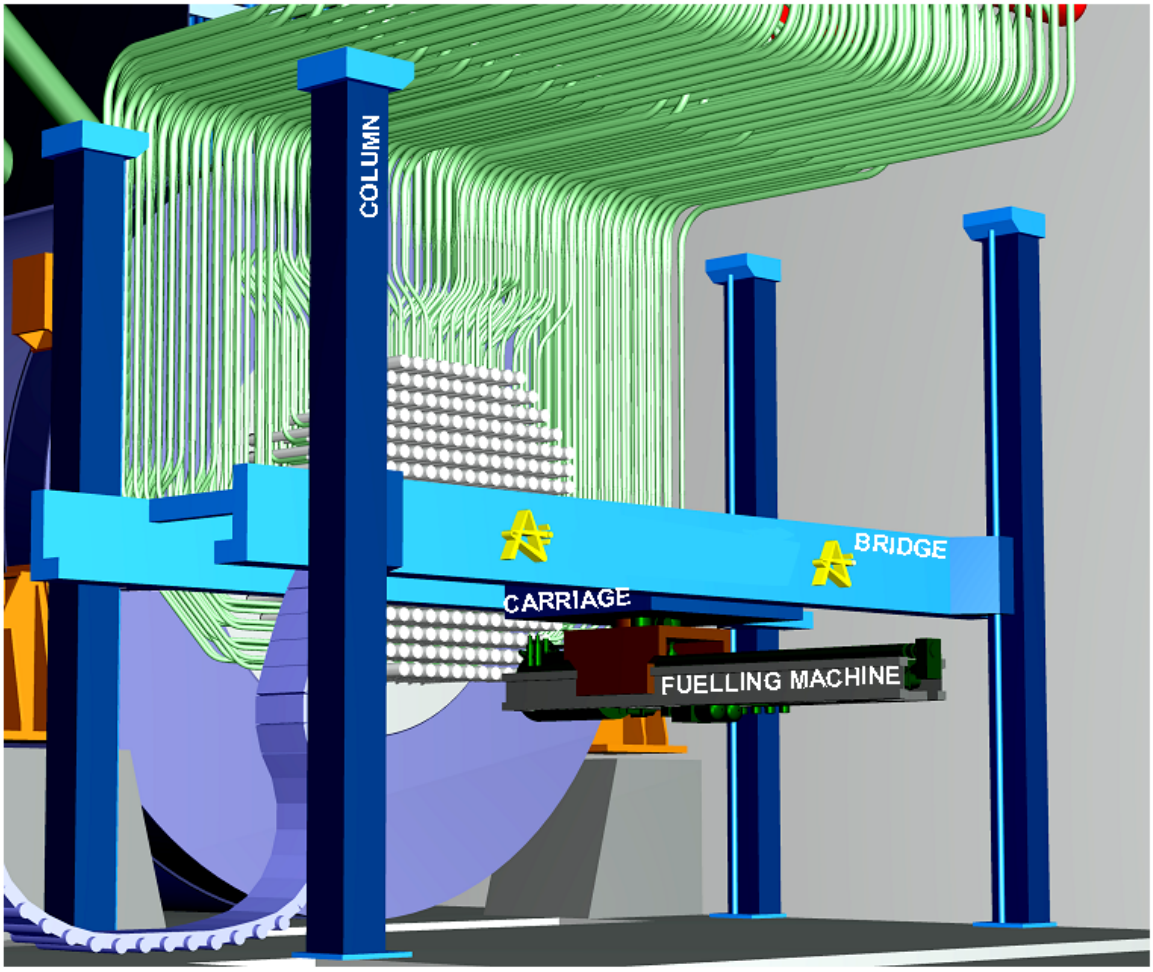

Figure 2-5 ACR-700 FM Bridge and Carriage

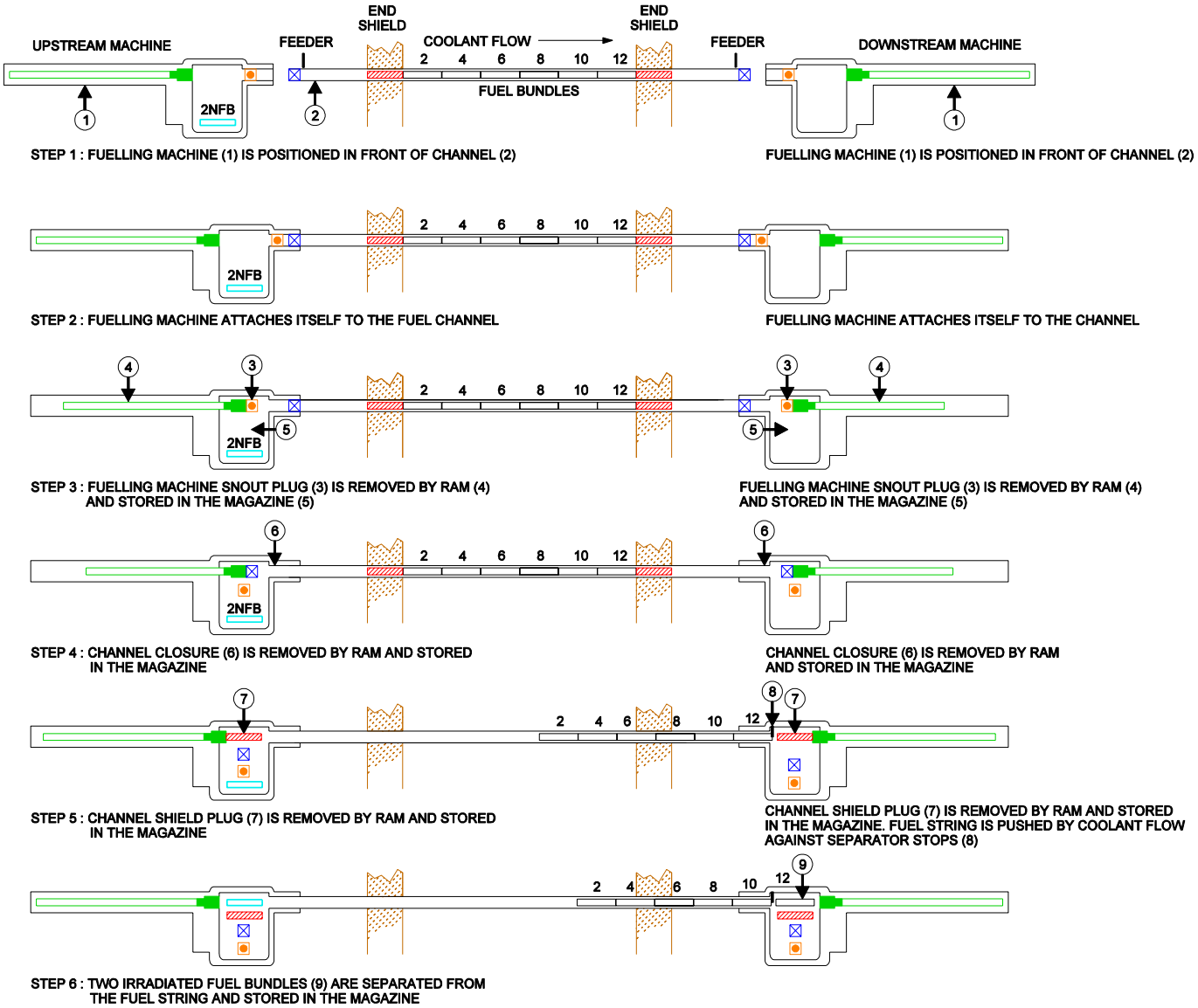

Figure 2-6.1 ACR-700 Two Bundle Fuel Changing Sequence

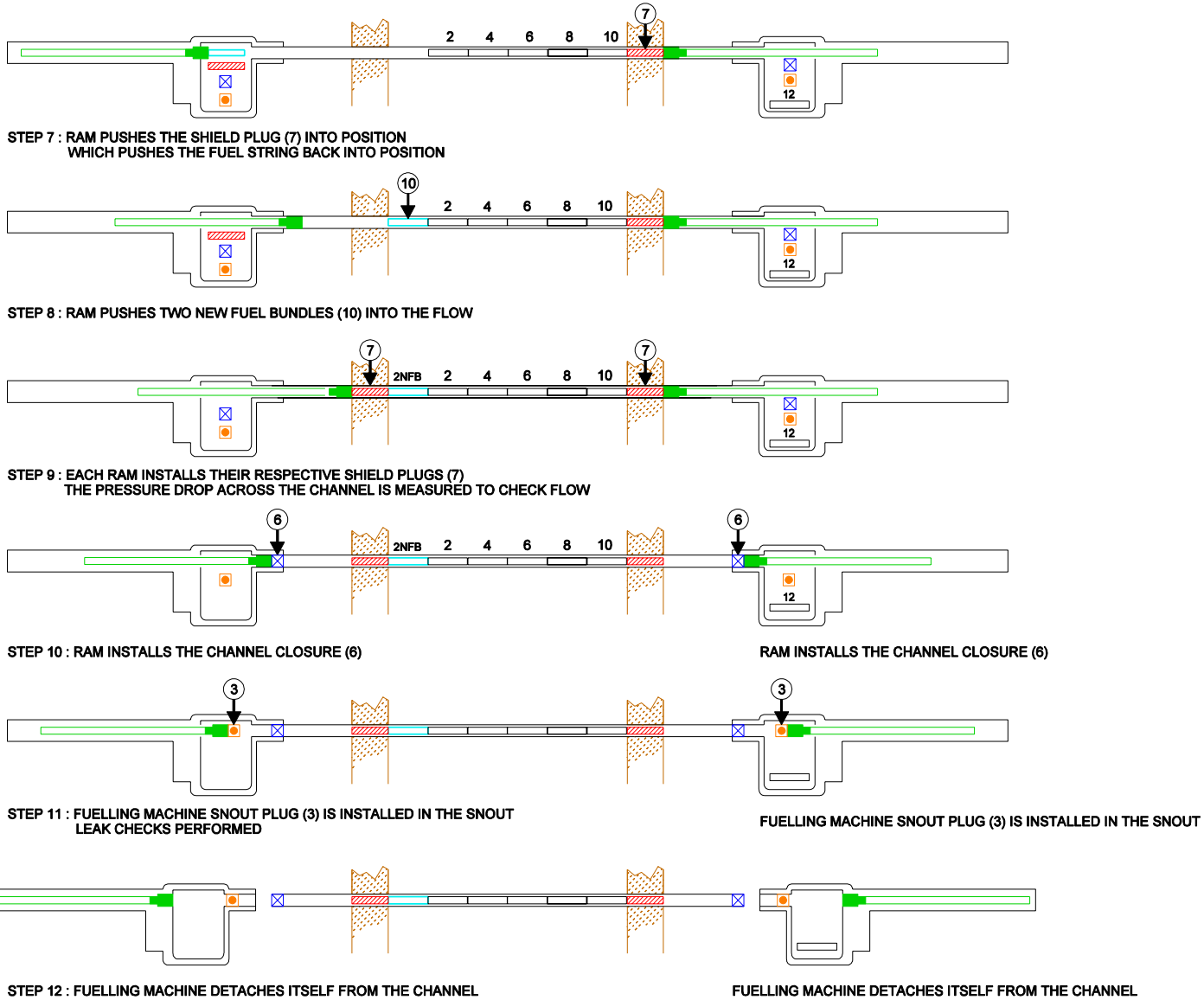

Figure 2-6.2 ACR-700 Two Bundle Fuel Changing Sequence

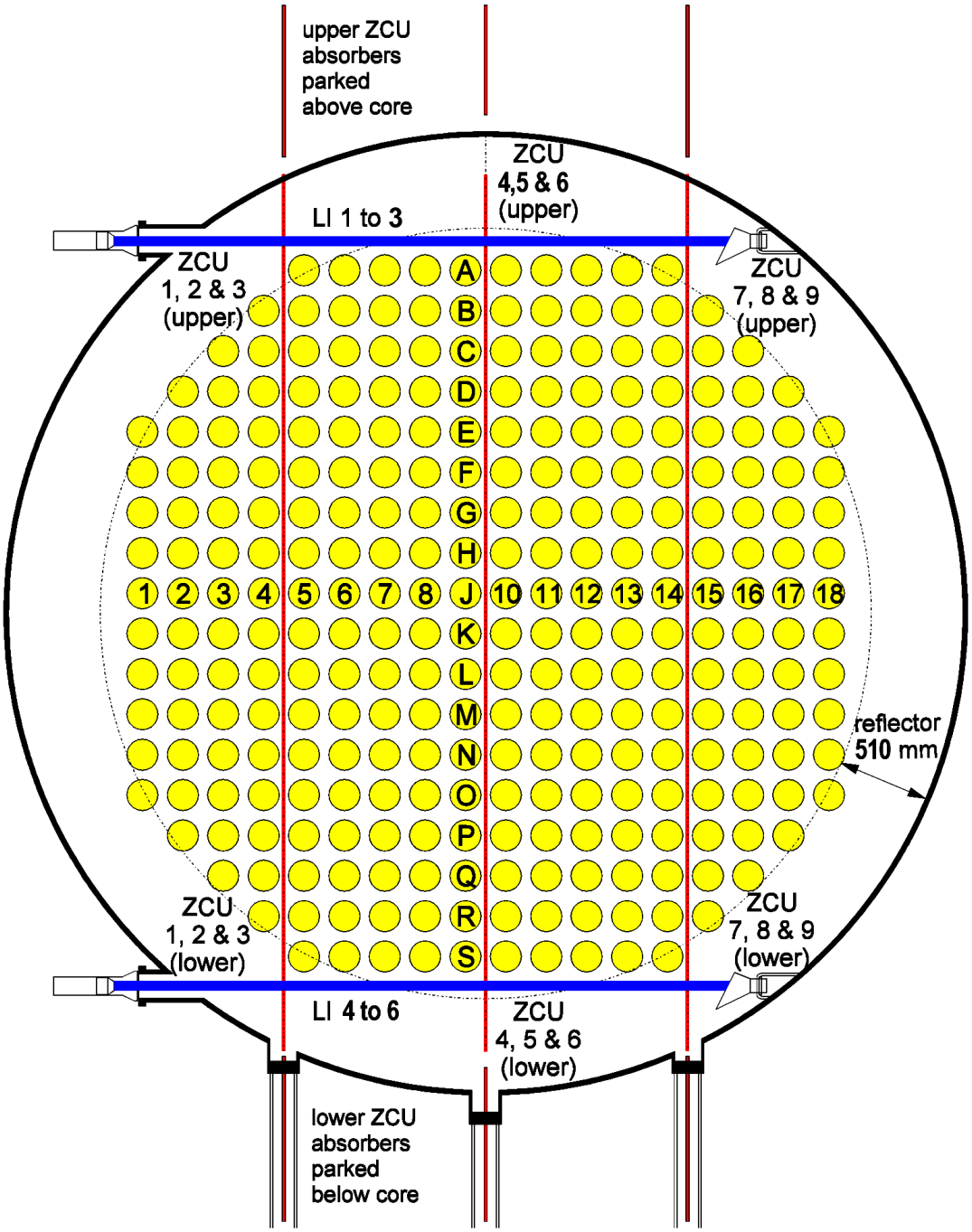

ACR-700 Reactor Core
284 Fuel Channels
220 mm Lattice Pitch

Figure 2-7 End View of ACR-700

3. ON-POWER FUELING BENEFITS

3.1 Introduction

In order to refuel a LWR, it must be shut down, cooled down and depressurized. The ACR, on the other hand, can be refueled at full power without needing to be cooled down or depressurized. The benefits of on-power fueling are that it contributes to a high capacity factor, reduces available excess reactivity, provides more flexibility in planning shutdown activities, leads to improved reactor coolant chemistry, keeps fuel costs low, and allows more fuel-cycle flexibility.

3.2 Contribution to High Capacity Factor

The fact that the ACR is refueled at power helps contribute to the high capacity factor. As forced outages are not required to refuel the reactor, the number and duration of forced outages are reduced and the outages can be scheduled for non peak times based on market conditions rather than being locked into a fixed fueling cycle. Station incapability due to fuel handling is historically less than 1% and therefore has little impact on the capacity factor.

3.3 Low Excess Reactivity

The amount of excess reactivity in the core when the core is first loaded with fuel is approximately +15 mk, dropping to +4.5 mk after about a year's operation, when the distribution of fresh and burned fuel in the core has reached equilibrium conditions. This is significantly less than in a typical refueled PWR, where more than 100 mk of excess reactivity are compensated by boron in the coolant. Without refueling, the ACR reactor will shut itself down after about 7 days of full power operation. The additional reactivity inserted by two new fuel bundles in a channel is very small (about 0.2 mk). Zone control mechanisms with ± 4.5 mk allow for flexibility of the short term refueling schedule as well as giving spatial control and xenon override capability.

3.4 Flexibility in Planning Outage Activities

The ACR does not require an outage for refueling, which is performed on-power on a daily basis.

Therefore fuel handling has very little impact on outages, resulting in less logistical, scheduling and manpower challenges than for a PWR where an outage is necessary to allow refueling.

As refueling is normally done with the reactor on-power, it is not a significant consideration for outages. However, channels can be refueled with the reactor shut down, if required. For example, FMs can be used to defuel/refuel a fuel channel to support inspection activities. Unlike PWRs, refueling of the ACR does not require flooding of a refueling cavity in the reactor building.

Also, since access to the reactor building while on-power is a normal activity, and the majority of the fuel handling equipment, including the control equipment, is accessible for maintenance with the reactor at full power, fuel handling maintenance does not normally affect any outage schedules. The only exceptions are the fueling machine bridge elevator drives which require infrequent maintenance and are serviced in parallel with other activities associated with planned outages.

During outages, the fueling machine bridges can be used as elevating platforms for various channel inspection activities.

3.5 Minimization of Fission Products in Reactor Coolant System

Although CANDU 6 fuel bundles have a low defect rate of less than 0.1 %, if a defect does occur, the bundle can be identified and removed from the core in a timely fashion while the reactor is on-power, thus minimizing its impact on the RCS contamination.

The gaseous fission product (GFP) monitoring system determines the activity concentrations of selected fission products in the RCS, and the failed fuel location system assists in identifying the fuel channel, which contains the defective fuel. The defective fuel bundle can then be identified by power ramps and potential sampling of coolant in the proximity of the bundle. The channel is refueled at the earliest opportunity to minimize the build-up of fission products in the RCS. When a defective bundle is discharged from the SF transfer mechanism into the SF reception bay, it is segregated from the other SF bundles, as described in Section 2.4.2.3.

3.6 Low Fuel Cost

On-power fueling allows the introduction of new fuel and the removal of spent fuel on a frequent or on-going basis, which extends the useful life of the fuel, since the excess reactivity possessed by the new fuel can be used to compensate for the loss of reactivity of the old fuel. It also allows a small, simple fuel design that is easy to handle and manufacture. Refueling on a continuous basis also allows a lower U-235 enrichment; 2% rather than the 3 to 4% enrichment required by LWRs in order to operate for long periods without refueling.

3.7 Fuel-Cycle Flexibility

On-line refueling and flexible fuel-bundle design enable the ACR to easily adapt to various advanced fuel cycles using plutonium and thorium fuel. The ACR is an ideal reactor to use plutonium fuel because plutonium produces a slightly-negative coolant-void reactivity and moderately-negative power coefficient in the ACR without the need to use burnable poison in the fuel bundle. Fuel management is very flexible and can be easily tailored to accommodate MOX fuel with a wide range of fissile-plutonium purity. Even very low-grade plutonium with a fissile content less than 50% can be used in the ACR. The ACR can operate with a 100% MOX fuel core without requiring modifications to the reference reactor design because the benign neutronic characteristics of the ACR-SEU fuel cycle are inherent in the ACR-MOX fuel cycle.

The ACR is also an excellent candidate for implementing the thorium-fuel cycle in the future when uranium resource becomes scarce and the thorium-fuel cycle becomes economically attractive. Various recycling strategies are being formulated to optimize the use of thorium fuel in the ACR.

4. OPERATION AND MAINTENANCE

4.1 Operational History

There are decades of successful experience with on-power fueling in CANDU reactors.

In the late 1950s a horizontal pressure tube CANDU reactor design was conceived. On-power fueling was introduced, to allow the use of NU fuel, as it permits daily additions of small amounts of reactivity without having to shut down.

A prototype design, the 22 MWe Nuclear Power Demonstration (NPD) plant was brought into service in May 1962, and as part of its mission, established the viability of on-power fueling for commercial nuclear power plants.

A 206 MWe commercial demonstration plant, Douglas Point, was built on the shore of lake Huron and was declared in-service in September 1968, but even before this, as soon as on-power fueling was demonstrated on the NPD plant, an agreement was reached between Canada and India to build two Douglas Point type commercial 200 MWe power reactors in India's Rajistan state. RAPS-1 and 2 were in-service by December 1973 and April 1981 respectively. The Indian nuclear program continued without AECL's participation, with more plants evolving from RAPS-1 and 2, all with on-power fueling. Between July 1983 and December 2000, MAPS 1 and 2, NAPS 1 and 2, KAPS 1 and 2, Kaiga 1 and 2, and RAPS 3 and 4 were all declared in-service. Kaiga 3 and 4 are under construction.

In March 1964, Pakistan's Economic Planning Commission approved construction of a CANDU in the Karachi area. The plant, a 125 MWe improved version of NPD known as KANUPP was declared in-service in November 1972.

Meanwhile, Ontario Hydro (now Ontario Power Generation) launched its massive nuclear power program through commitments to build a multi-unit station at Pickering, and officially launched the construction of the first of four 515 MWe units in September 1965. Each unit has a dedicated on-power fueling system with shared fuel storage bays. By June 1973, all four units were in-service, making Pickering 'A' the world's biggest nuclear station. In November 1974, construction started on Pickering 'B', a sister station to Pickering 'A', and by February 1986, all four of these units were in-service.

In 1969, Ontario Hydro was heavily committed to its nuclear program, and decided to build four 740 MWe units at the Douglas Point site (named Bruce, after the county). Construction started in December 1970 and by January 1979, all four units of Bruce 'A' had entered commercial service. This was the first of a line of CANDU Reactors to employ shared fuel handling systems; typically three FH systems serviced the four reactor units which shared a common fuel bay. The fueling machines travel under the reactors on a trolley to service multiple reactors. By June 1978, construction had already started on Bruce 'B', a sister station to Bruce 'A', and by May 1987, all four of these 750 MWe units were in-service.

In September 1981, construction started on the Darlington station, comprising four 881 MWe units refueled on-power by three pairs of remotely controlled fueling machines each capable of traveling in an interconnecting duct under the reactors to spent fuel storage bays located at either end of the plant. This was a departure from the Bruce design where a single spent fuel bay is located in the centre of the plant. By June 1993, all four units were in-service.

Hydro Québec signed a contract in February 1973 for the first CANDU 6 plant to be built at the Gentilly site near Trois Rivières. The new Québec reactor would be known as Gentilly 2 and would serve as the prototype of those stations subsequently built in Argentina, South Korea, Romania, China and New Brunswick. In 1974, New Brunswick became the third Canadian province to commit to a nuclear power plant. The CANDU 6 stations were declared in-service as follows:

- Point Lepreau in New Brunswick, Canada: February 1983
- Wolsong 1 in South Korea: April 1983
- Gentilly 2 in Québec, Canada: October 1983
- Embalse in Argentina: January 1984
- Cernavoda 1 in Romania: December 1996
- Wolsong-2 in South Korea: July 1997
- Wolsong-3 in South Korea: July 1998
- Wolsong-4 in South Korea: October 1999
- Qinshan 1 (3A) in China: December 2002
- Qinshan 2 (3B) in China: July 2003.

Cernavoda 2 in Romania is under construction and scheduled to be in-service in March 2007.

4.2 Physics, Thermalhydraulics and Fuel Performance

Analytical studies show that an ideal reactor, from the point of view of fuel utilization, is one which is continually fuelled and hence operates on the average with very little neutron absorption in non-fuel components such as control rods. Thus from the very beginning CANDU fuel design evolved in the form of short bundles of elements about 500 mm (19.5 in.) long to approximate this ideal.

There is little excess reactivity in the CANDU core. On-power refueling is designed to add reactivity to the core by replacing old fuel bundles with new ones on a daily basis. Day-to-day reactivity control is accomplished by on-power refueling and zone-control action. During refueling operations, the zone control units, under the control of the reactor regulating system, maintain the desired local and bulk reactor power levels as new fuel bundles replace older bundles nearing the end of their effective lives.

The function of the zone controllers goes beyond fuel changing. They are the means of providing fine regulation of reactor power. The zone controllers suppress the reactivity disturbances caused by:

a) fuel burnup between refueling, and axial movement of fuel in channels during refueling,
b) power-level changes,
c) changes in the RCS conditions,
d) changes in neutronic absorption associated with the buildup and depletion of Xe-135,
e) movement of control absorber unit (CAU) rods, and
f) small variations in moderator-poison concentration.

There are 9 zone control units (ZCUs) or assemblies. Their locations are shown in Figure 4-1. Control of local and bulk power is accomplished by adjusting the position of each zone-control absorber under the control of the reactor regulating system computer.

The number of bundles replaced per visit affects the physics since the local neutron flux perturbations in channel power during refueling is proportional to the number of bundles exchanged. This is called "fueling ripple". Since the reactor is fuelled continually and on-power at a rate which keeps the reactor critical, the fueling ripple is well within the range of the zone controller response. For a standard 2-bundle-shift refueling scheme, the reactivity change after refueling in an average channel is less than 0.2 mk. The zone control units have a maximum range of ± 4.5 mk, which is enough to handle the following operations:

- perform bulk- and spatial-control functions,
- provide about 12 minutes of xenon override time,
- reduce power from 100% to 75% and hold indefinitely, and
- provide reactivity for about 7 full-power days without refueling.

As an option adjusters can be fitted to increase the range of power adjustment.

The ability to change fuel in any channel at any time allows the operator to control the radial power distribution very effectively, by ensuring suitable burnup differential in the radial direction. Therefore, the CANDU design facilitates this method of power shape control. This means that, except for an initial transition period from an all-fresh core to one with an equilibrium distribution of fuel irradiations, the power distributions and physics characteristics remain constant in a global sense. This is described as a core at "equilibrium" burnup.

The reactor should be operated such that the reactor regulating system, acting alone, is capable of introducing sufficient negative reactivity to shut it down under normal operation. The design philosophy for CANDU plants requires a strict separation between process systems and special safety systems. In terms of reactivity control this means that the shutdown systems are used only to achieve a rapid shutdown in the event of an accident.

The site fueling engineer selects the channels that need refueling using procedures and training which are consistent with generic good practices. The objectives are:

a) Bulk and spatial control objectives are satisfied by fueling at a rate and at locations that maintains the zone controllers within their normal operating range.
b) The reactor operating license for each CANDU reactor specifies maximum allowable channel and bundle powers. The purpose of these limits is to ensure a high standard of fuel performance under normal operating conditions and to define the safe operating envelope under which the reactor safety analysis is done. Compliance with channel power and bundle power limits is a primary constraint in fueling.
c) Remove any defective fuel.
d) Maximize fuel average discharge burnup and hence minimize fueling costs while maintaining the reactors at licensed power.

The primary criteria for channel selection are burn-up and channel power-ripple. The highest burnup channel is normally selected, provided that the post fueling state satisfies bundle power,

channel power, ripple and zone level requirements. About 3% margin to trip and that no 'hot spots' are created in the core are ensured during actual fueling.

Burnup is optimized by the fueling strategy, which is designed to keep bundle and channel powers within the axial and radial power shape. The desired axial shape is achieved by varying the number of bundles fuelled in a channel per channel visit. Radial shape is achieved by ensuring appropriate differential burnup, that is, different burnup values in inner and outer core regions. The ACR reactor has an inherently stable flat radial thermal flux distribution. This characteristic of the ACR reactor enables the operation of the reactor with only small adjustments in the fueling rates between the inner and outer core regions (the outer region is fuelled more frequently). On-power fueling permits operation with an essentially constant power shape.

The ACR design takes full advantage of the relationship between reactor physics, thermalhydraulics, and fuel design. The combination of bi-directional fueling (adjacent channels are refueled in opposite directions), fueling with flow and a 2-bundle shift refueling scheme results in excellent axial power distributions (Figure 4-2). The ACR's axial power shape provides better thermalhydraulic performance margins (in terms of critical heat flux, or critical channel power) than a cosine, or outlet-skewed axial power distribution because the highest power bundle resides at a position in the fuel channel where the coolant temperature is relatively low, and at the downstream position where the coolant saturates, the bundle power is lower than that of CANDU 6 giving more margin to dry-out. For a given bundle power limit, the ACR axial power profile allows slightly higher channel powers relative to the traditional CANDU cosine power profiles. The sustained power boosting that occurs during refueling is experienced by relatively low burnup fuel, which is resilient to power boosts. After the initial peak, the fuel sees a declining power history, which ensures good fuel performance margins.

The CANFLEX geometry allows an increase in average bundle and channel power, relative to the CANDU 6, while still having lower linear element ratings than for 37-element NU fuel.

4.3 Maintenance

Without refueling, the ACR reactor will shut itself down after about 7 days of full power operation. Because of the complexity of the fuel handling system and its required availability, maintenance needs to be carried out by station staff on a regular basis.

Routine maintenance of the fueling machines, carriages and ports is done in the maintenance locks in the reactor building with the shielding doors closed. A hoist is available in each lock to facilitate servicing.

Major repair work on the fueling machine heads is performed in the maintenance facility. This facility includes a fueling machine decontamination room, which is a totally enclosed area capable of accepting a complete fueling machine head or its major parts for decontamination. Walls and floors are covered with moisture-proof coatings, which are readily cleaned and decontaminated. Steam cleaning equipment, storage shelves and an overhead crane facilitate servicing.

A fueling machine head can be transferred to these rooms on a motorized service cart.

4.4 Staffing

Operation and maintenance on the fuel handling system is carried out by station staff on an on-going basis. This requires permanent fuel handling staff, such as engineers, operators and maintainers as opposed to the temporary staff required during a PWR refueling outage. Some of this staff could be cross-trained, as done at some CANDU 6 stations, to minimize idling time. The work is spread out rather than being concentrated into a period of a few months. Since on-power fueling staff remain fairly constant, staff remain familiar with the station equipment and do not normally require a re-familiarization period.

4.5 Fueling Machine Recovery

Some past fueling machine failure scenarios that have required special recovery techniques are described in Appendix B. However, several of these failure scenarios are not applicable to the ACR due to specific features that have been incorporated into the ACR fueling machine, such as fully redundant electric motors, shutdown defueling, and elimination of the guide sleeve (refer to Section 6).

In the event of malfunction of a FM or during a shutdown, it may be necessary to remove fuel bundles from the fuel channel or from a disabled FM. The channel can be defueled using shutdown defueling, which is a feature specific to the ACR fueling machines (refer to Section 6.8). It may be necessary to extract irradiated fuel bundles from the disabled fueling machine, using ram extensions and grapples.

A grapple is a mechanical device that can be attached to the ram head on the ram assembly and manipulated in the same manner as in handling a channel closure or a shield plug. The grapple length is equivalent to that of a fuel bundle. It incorporates spring loaded fingers that can be used to latch onto a fuel bundle at its end plate.

Once the fuel bundle is attached to the grapple, the FM ram assembly can pull the grapple and the attached fuel bundle into the FM magazine station.

One or more ram extensions are used to allow the grapple to reach inside the fuel channel and as far as the disabled FM magazine at the far end, to retrieve any stuck fuel bundle. These ram extensions are the equivalent length of two fuel bundles, comprising cylindrical sections that can be attached to and detached from one another as well as to and from the grapple. They can be stored in the FM magazine stations in a similar manner to a pair of fuel bundles.

The ram extensions and grapples may become contaminated but they can be discharged from the FM during maintenance and servicing. Ram extensions and a grapple with a fuel bundle attached can be transferred from the fueling machine to the spent fuel reception bay via the spent fuel transfer system.

4.6 Availability

Overall, the contribution that CANDU fuel handling systems have made to plant unavailability is very small; station incapability due to fuel handling is historically less than 1%. There are a number of reasons for this: the design is robust and accommodates timely recovery from potentially significant failure scenarios; almost all of the equipment can be maintained while the unit is operational; and there has been a long history of incremental development. This

performance has been studied in more detail, by looking at operating experience (OPEX), interrogating a number of databases such as COG, and by discussing malfunctions and maintenance issues with fuel handling operations staff from various CANDU stations.

Many of the equipment failures, malfunctions and maintenance issues reported in the feedback resources have been addressed and mitigated in the design of the ACR fuel handling system, and this new system is expected to further improve plant availability. Some of the equipment failures and malfunctions are listed in Appendix B. Some of the ACR design improvements that help reduce and mitigate fuel handling failures and malfunctions are listed in Section 6.

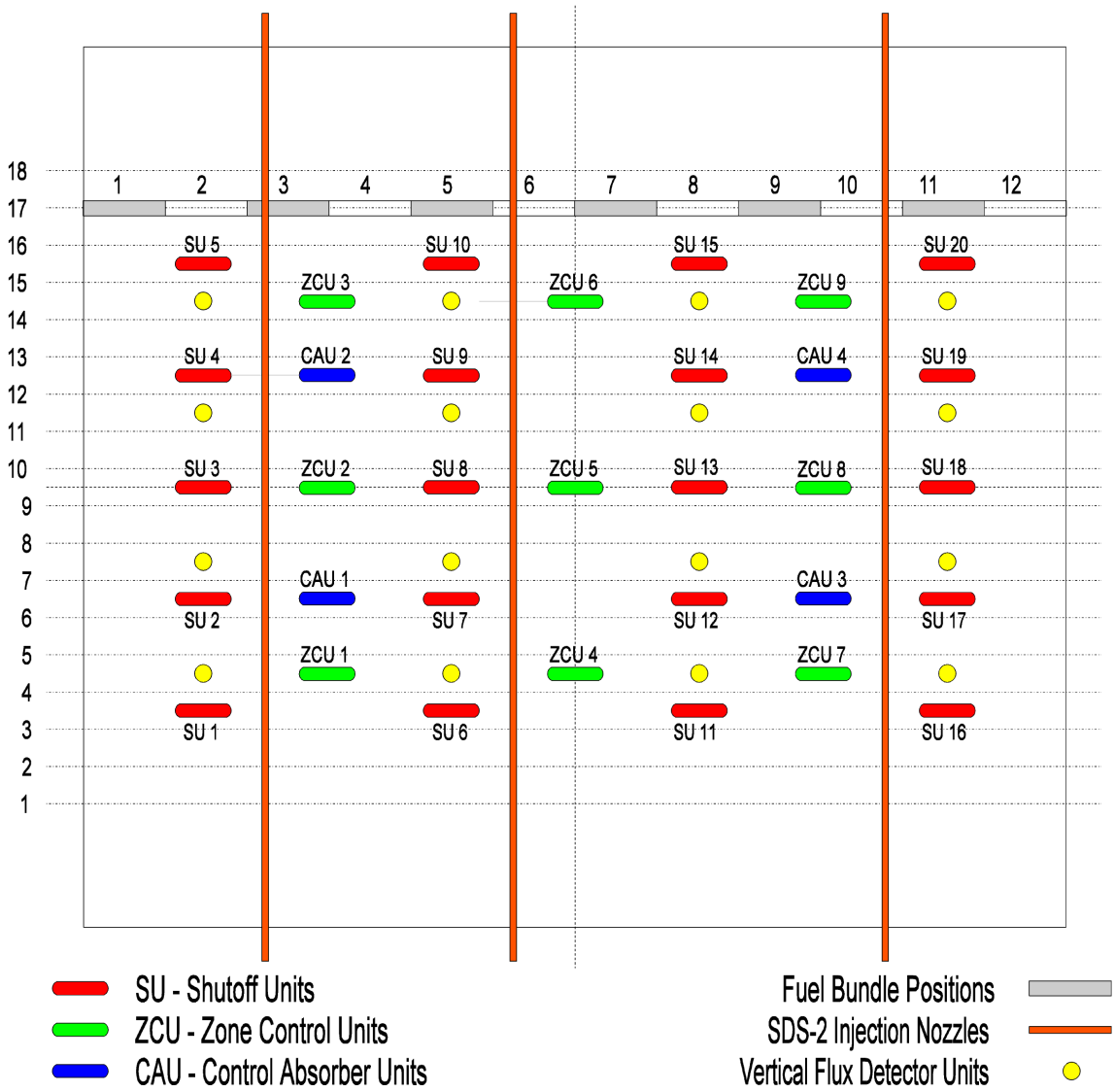

Figure 4-1 ACR-700 Reactivity-Mechanism Deck Plan View

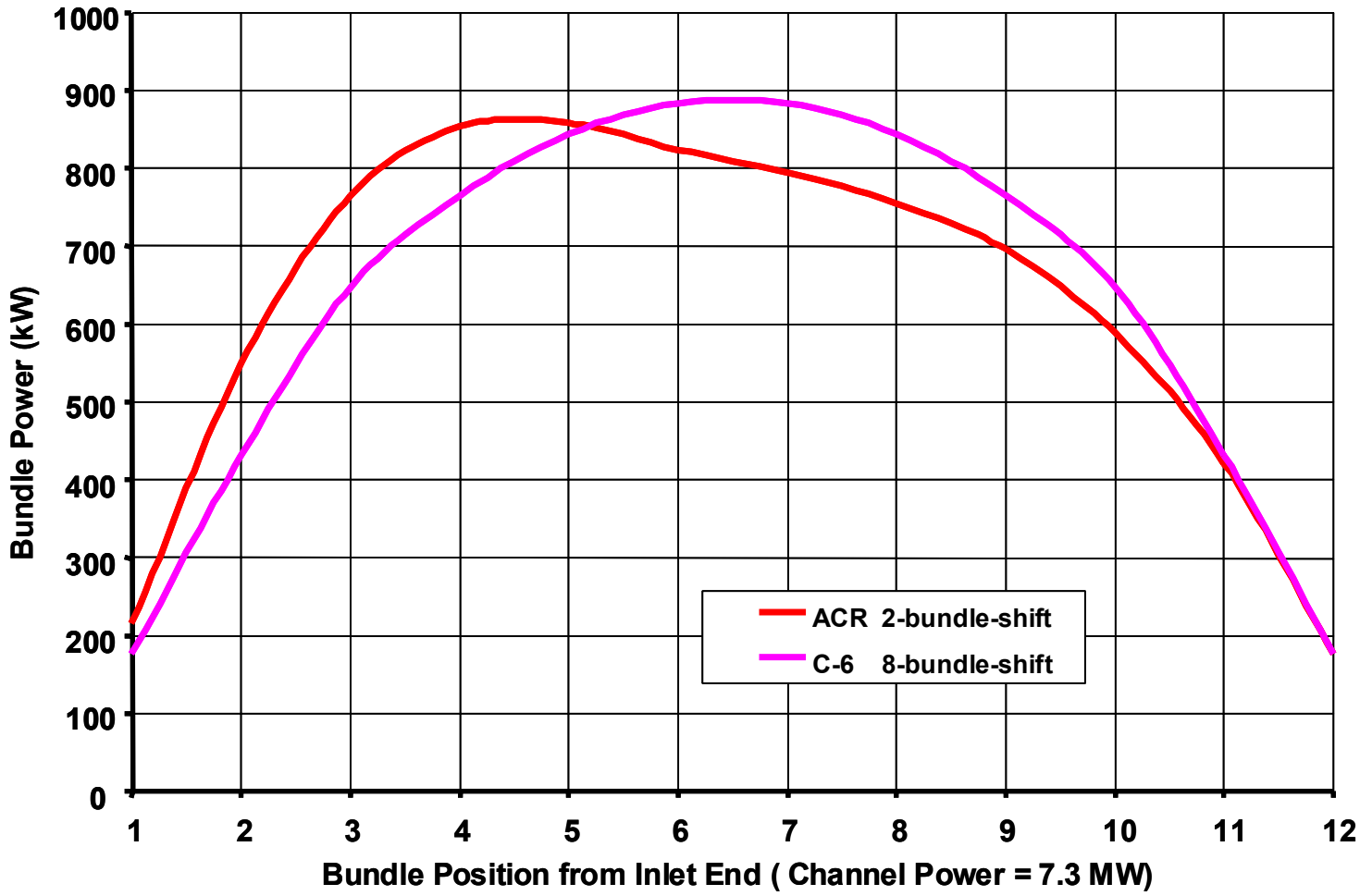

Figure 4-2 Bundle-Power Profile in ACR-700 vs. CANDU 6

5. STANDARDS AND SAFETY

5.1 Introduction

During on-power fueling, the FM becomes an extension of the reactor fuel channel end fitting and is subjected to the pressure in the RCS. The FM is designed as a reliable high integrity device. Portions of it are equivalent to static pressure vessels and are designed to the CSA N285.0 standard, which provides general requirements for all pressurized systems on the plant including administrative, regulatory and quality requirements and provides direction into the ASME Code for Class 1, 2 and 3 systems and components for all technical rules of design and construction. Other portions, such as elastomeric hoses, the failure of which results in release of fluid, are designed to the CSA N285.2 standard which provides technical rules for those components which are unique to the CANDU design and are not adequately dealt with by the ASME Code. Additionally, the on-power fueling concept requires the FM pressure boundary and its support structure to be seismically qualified to the requirements of the CSA N289.3 standard.

Furthermore, the FM must visit different reactor fuel channels, the fuel transfer ports and auxiliary ports. Therefore its support system must provide transport mobility, whereas the requirements for ASME pressure vessel supports generally address static structural components.

This chapter considers CANDU nuclear fuel handling primarily from a safety viewpoint. For protection of the workforce, the public and the environment, undesired events include:

- approach to nuclear criticality by fuel outside a reactor
- fuel failures during or due to fuel handling
- fuel handling induced dispersal of radioactivity
- excessive radiation fields around fuel handling equipment when operator access is permitted.

Defense against such events, and mitigation of unavoidable events, are built into the design of the fuel handling system.

CANDU reactor safety is designed for defense-in-depth, meaning that the first line of defence is the fuel matrix, an intact fuel clad is the second line of defense against activity release; if there is a fuel defect, then an intact pressure boundary of the RCS retains the activity. The CANDU FM is part of the RCS, because whenever the FM is on-reactor, it becomes an extension of the reactor coolant pressure boundary.

If the seal between the FM and an end fitting fails, then activity may escape into the containment. As a next defense, the reactor building containment is designed to prevent dispersal of radioactive materials, and as further defense against concentrated activity reaching the population at large, a stack may disperse filtered, vented gases, and an exclusion zone is maintained around the nuclear power station. To keep the fuel sheath from failing, various cooling means are provided to mitigate the hazardous consequences. Also, shielding, protective clothing and rigorous controls minimize radiological exposure of the operators. Even so, some hazards remain and must be provided for.

For the purposes of failure mitigation, abnormal operation of the fuel handling systems, which may result in fuel exceeding its design temperature are considered. Depending on the severity of the event, the consequences may affect some operating personnel at a reactor station, the

environment or a portion of the population near a nuclear generating station. Minimizing fuel failures during fuel handling can simplify the short and long term storage of the irradiated fuel and reduce the related safety issues.

The CANDU fuel handling system consists of equipment for new fuel loading into fueling machines, the fueling machines and the structures to transport and position them, and equipment for transferring irradiated fuel from the fueling machines to the spent fuel bay. The detailed functions, operating principles, monitoring, control and maintenance of these systems, and the recovery after a malfunctioning of a fuel handling system are described in other chapters and appendices of this report.

CANDU on-power fueling spans 45 years of shared development efforts among AECL, Ontario Power Generation (formerly Ontario Hydro) and several other utilities and manufacturers in Canada and abroad. In 1984, a CANDU umbrella organization called CANDU Owners Group (COG), was founded to coordinate common efforts to share CANDU operating experience among the concerned utilities and organizations. COG collects data on safety related events, and undertakes joint funding of development of safety related improvements, modifications and new designs. The lessons learned from past operation of CANDU stations and from COG development efforts reflect in the safety benefits of the new generation reactors.

As the CANDU power reactors evolved, their operation and safety have been subject to strict government licensing. Thus, it is instructive to point out that although there are no regulatory requirements codified for CANDU fuel handling safety, the relevant government guidelines (ref. CNSC Consultative Document C-6, Reference [3]) state that the licensee has to perform a comprehensive and detailed review of the design to identify failures of equipment. The licensee must analyze or predict the consequences of these postulated failures of fuel handling equipment. Indeed, this was done for each CANDU reactor to satisfy the government licensing requirements. Good engineering practice and the licensing guidelines dictate that the causes of each undesired event related to fuel handling systems of CANDU reactors should be understood, and a solution developed which would eliminate the event, or at least alleviate the consequences.

The safety of the CANDU fuel handling systems is judged by three methods:

- Review of fuel handling related undesired events at existing CANDU power plants
- Probabilistic assessment of accidental occurrences
- Deterministic calculation of the consequences of selected hypothesized accident cases.

The current CANDU design criteria for maximum permissible doses to atomic radiation workers are listed in Table 5-1 (ref. “Atomic Energy Control Regulations, Reference [4]). Although the limit doses do not distinguish between the sources of the radiation, they are of vital importance to workers, who may be in the containment building on a regular basis, (e.g., on fuel handling related work). The maximum permissible doses to any other person (outside containment) are also specified (ref. “Atomic Energy Control Regulations, Reference [4]) but these are covered in the other safety related discussions, for example, in connection with the CANDU containment system.

The terminology of the International Nuclear Event Scale (INES) (Reference [5]) is used in this report to classify undesired events at nuclear power plants. Table 5-3 provides these

classifications in tabular form. Undesired events may be referred to either by level numbers or by equivalent descriptive names.

In the more than 450 reactor years of accumulated CANDU fuel handling experience, there has been no serious accident causing harm to the operators or the public. Some incidents with minor dispersal of activity, within or even outside containment occurred, and in some cases operators received more irradiation than permitted.

5.2 Standards

5.2.1 Applicable Codes and Standards

The following are the major codes and standards applicable to the design of the ACR fuel handling system.

ANSI B31.1	Power Piping
ASME BPVC Section III/VIII	Boiler and Pressure Vessel Code
CAN/CSA-N285.0-95 (R 2003)	General Requirements for Pressure-Retaining Systems and Components in CANDU Nuclear Power Plants
CAN/CSA-N285.2-99	Requirements for Class 1C, 2C, and 3C Pressure-Retaining Components and Supports in CANDU Nuclear Power Plants
CAN/CSA-N285.3-88 (R 2000)	Requirements for Containment Systems Components in CANDU Nuclear Power Plants
CSA N285.4	Periodic Inspection of CANDU Nuclear Power Plant Components
CAN/CSA-N285.5	Periodic Inspection of CANDU Nuclear Power Plant Containment Components
CSA N286.2-00	Design Quality Assurance for Nuclear Power Plants
CSA N287.3-93 (R 1999)	Design Requirements for Concrete Containment Structures for CANDU Nuclear Power Plants
CSA CAN3-N289.3-M81 (R 2003)	Design Procedures for Seismic Qualification of CANDU Nuclear Power Plants
CSA N292.2-96	Dry Storage of Irradiated Fuel
IEEE 323	Standard for Qualifying class 1E Equipment for Nuclear Power Generating Stations

5.2.2 Purpose

The CSA N285 series of standards has been produced to provide uniform rules for the design, fabrication, and installation of pressure-retaining systems and components in CANDU nuclear power plants. CSA Standard N285.0 provides direction to the ASME Code requirements to properly relate the design and construction of specific CANDU components. In other cases, CSA Standard N285.2 rules are provided where the ASME Code does not address CANDU

design needs. The design fabrication, installation, commissioning and operation of nuclear facilities in Canada are also subject to the Nuclear Safety and Control Act and the Atomic Energy Control Regulations. Therefore, additional requirements may be imposed by the Canadian Nuclear Safety Commission (CNSC).

The specific objectives of the series are:

a) To establish rules relating to authorization, approval, and acceptance, where such rules differ from those specified in the ASME Code;
b) To specify requirements for materials and rules for the design, fabrication, installation, examination, inspection, testing, and repair of pressure-retaining systems and components, where such systems and components are not covered by the ASME Code;
c) To establish rules for classification of systems and components based on the rationale and criteria consistent with the Canadian safety philosophy, as set forth by the CNSC;
d) To set up rules for the periodic inspection of CANDU nuclear power plants;
e) To provide interpretation of the rules contained in the standards for nuclear power plant systems and components.

5.2.3 Description

The CSA Standards that are pertinent to fuel handling design are as follows.

5.2.3.1 General Requirements for Pressure-Retaining Systems and Components in CANDU Nuclear Power Plants (CSA N285.0)

This standard specifies the general requirements for the design, fabrication, and installation of pressure-retaining systems and components in CANDU nuclear power plants. Most of these requirements govern the Canadian administrative system of classification, registration, and quality assurance, where they differ from the ASME Boiler and Pressure Vessel Code. It also specifies the requirements for design, fabrication, and installation of Class 1, 2, and 3 pressure-retaining systems and components in CANDU nuclear power plants. To a large extent these classes are adequately covered by the ASME Code, however some additional technical rules complement the ASME Code.

5.2.3.2 Requirements for Class 1C, 2C and 3C Pressure-Retaining Components and Supports in CANDU Nuclear Power Plants (CSA N285.2)

This standard establishes rules for the design, fabrication, examination, testing and inspection of components that have been classified by CSA Standard N285.0 as Class 1C, 2C, or 3C. The purpose of this standard is to provide rules for pressure-retaining components of CANDU nuclear power plants where, because of the design concept, the rules of the ASME Boiler and Pressure Vessel Code, as required by CSA Standard N285.0, do not exist, do not apply, or are insufficient. The rules complement those specified in CSA Standard N285.0 and the ASME Boiler and Pressure Vessel Code Section III. In some cases ASME Code requirements are modified to properly relate the construction of specific CANDU components to the intent of the ASME Code. For those cases where requirements unique to the CANDU design are not addressed by the ASME code, additional rules are provided

5.2.3.2.1 Fueling Machine Supports

Fueling machine supports in CANDU reactors are composed of structural supporting elements and mechanisms unique to on-power fueling systems. Portions of these have mobile functions not usually found in typical supports for pressure-retaining components. For example, an elevating bridge and carriage is used to move each FM from one reactor channel to another during on-power fueling. Ball screw and nut assemblies are used to produce the bridge motion as well as to provide support. CSA standard N285.2 provides the classification and design requirements relevant to these unique components.

Supports in general are required to meet the design requirements of ASME Section III, Division 1, NF 3000.

For mechanisms that produce or control motions and carry support loads, whose failure would result in a loss of support, the applied loadings determined by stress analysis, experimental stress analysis, or load rating, shall be shown to satisfy the limits of the applicable ASME Section III subsection NF paragraphs defined in the standard. In addition, these mechanisms must be equipped with controls and interlocks to prevent motion of the support that could result in overstressing a pressure-retaining component or its support. It must also be possible to verify the operation of controls and interlocks.

5.2.3.2.2 Reinforced Elastomeric Hose Assemblies

This section defines the rules for use, design and fabrication of elastomeric hose assemblies.

Elastomeric hose may be used in Class 2 and 3 systems. Elastomeric hose may be used only if a failure will not cause the general public or operating personnel to exceed their dose limit. Hose materials must be reinforced and compatible with the contained fluid. Hose design must be qualified by adequate testing and documentation, and the fabrication of hose assemblies is subject to several test requirements.

5.2.3.2.3 Reactor Fuel Channel Closure Safety Lock

The standard requires that a safety lock shall be provided for each channel closure to prevent it from being unintentionally released from a fuel channel. The safety lock must be a positive mechanical locking device. Frictional-type locking devices are not acceptable.

5.2.3.2.4 FM to Channel Coupling Interlock

The standard requires that for on-power fueling, two independent and diverse interlocks shall be provided to prevent the FM from accidentally unclamping from the reactor fuel channel, when the channel closure has been removed. Frictional-type locking devices are not acceptable. One of the two interlocks shall be a mechanical device actuated by reactor pressure.

The safety interlocks must be engaged prior to removal of the channel closure by the FM and remain engaged until the channel closure has been inserted and secured.

5.2.3.2.5 Threaded Connections

The standard defines the rules for use of small diameter threaded connections for fluid lines in class 1 application.

5.2.3.3 Requirements for Containment System Components in CANDU Nuclear Power Plants (CSA N285.3)

This standard specifies the requirements and establishes the rules for design, fabrication, and installation of pressure-retaining containment system components. This standard does not cover the requirements for systems.

5.2.3.3.1 Vessels

Design of vessels and their attachments forming part of the containment boundary must comply with the requirements for Class 2 components as defined in CSA Standard N285.0 and pertinent sections of the ASME Boiler and Pressure Vessel Code as specified in the standard.

5.2.3.3.2 Airlocks and Transfer Chambers

Airlocks and transfer chambers providing access through the containment boundary must meet the following requirements:

a) Doors must continuously maintain the containment boundary.
b) Airlocks or transfer chambers must have pressure-relief systems and minimize the spread of radioactive substances.
c) The shell of a metal airlock or transfer chamber is considered a vessel. If the shell is made of concrete, it is considered part of the containment structure to be designed in accordance with CSA Standard N287.3.

5.2.3.3.3 Seal Plates

Seal plates may be used between the containment structure embedment and process system components that penetrate the containment structure, to form a portion of the containment boundary. Seal plates may also provide an anchor or support function for the penetrating system.

5.2.3.3.4 Electrical and Mechanical Penetration Assemblies

Electrical and mechanical penetration assemblies shall be designed to comply with the requirements of the applicable class within CSA Standard N285.0.

5.2.3.3.5 Flexible Bellows and Seals

Flexible bellows and seals must accommodate movements between the containment structure and penetrating systems. When non-metallic flexible bellows or seals are used to perform the containment seal function for the penetrating systems, dual seals shall be installed with provision for in-service testing by pressurizing the space between the seals.

5.2.3.4 Design Procedures for Seismic Qualification of CANDU Nuclear Power Plants (CSA N289.3)

This standard applies to those structures and components in CANDU nuclear power plants that require seismic qualification by analytical methods.

Seismic design requirements for commercial structures and industrial plants have existed in Canada for many years through the National Building Code of Canada (NBCC), which is

mandatory throughout Canada. The seismic design of nuclear power plants requires special consideration for the safety of the public. The seismic design philosophy for CANDU nuclear power plants is based on principles established by the CNSC.

5.3 Operational Safety Experience

5.3.1 Review of Actual Accidents and Incidents

The Canadian designed and built power reactors, the CANDUs, have already operated for an accumulated service life of more than 450 reactor years. During this operating experience, there have been no fuel handling "accidents", as defined in Table 5-3: that is, with radioactivity releases from reactor containments, in which the emissions represented a health risk to the public at large. There were a few "major incidents" (level 3) as defined in Table 5-3, affecting the operations and causing some radiation overdoses to a few operators, some cases with modest activity release within the containment building, and a few cases resulting in operator radiation doses in excess of the regulatory limits. Lesser incidents (levels 2 and 1) were more numerous, but mostly of the nuisance type and easily corrected. The fuel handling incidents experienced from 1980 to 1989 and their methods of recovery or technical remedies are discussed in Appendix B. This chapter groups and discusses the most important events in fuel handling with safety implications from a broader period, covering all fuel handling related undesired events in CANDU.

Experience gained in design and operation of earlier CANDU reactors was used in the design and operation of CANDU 6 reactors. CANDU 6 reactors have operated for an accumulated service life of more than 60 reactor years. In the approximately 43500 fueling operations, no significant damage has been experienced by the CANDU 6 fuel bundles. This improved performance was then built upon for ACR suggesting a further level of improved safety will be realised.

5.3.2 Fueling Machine Events

Few fuel handling problems with safety implications were experienced. These events can be categorized as cases where FMs were on-reactor: that is, with a FM attached to an end fitting with the channel closure removed, or events with improper interfacing between a FM and the mated end fitting, or with FMs off-reactor: that is in transit or at the spent fuel port. The undesirable events included irradiated fuel bundle damage in transfer mechanisms (other than the FMs) on the way to the spent fuel storage bay, and an irradiated fuel bundle dropping to the vault floor, and remaining there without liquid cooling. These events, primarily with our earlier CANDU reactors, have been learned from with mitigating design features and operation practices being incorporated into the reactors concerned as well as into other CANDU reactors

5.3.2.1 Fueling Machine On-Reactor

With the FM attached to an end fitting with the channel closure removed, undesired events included:

a) Break or puncture of inlet or outlet hoses to a FM. Such infrequent events occurred within the predicted service life range of the flexible rubber hoses in spite of regular inspections for pinholes, and preventive maintenance programs that replace un-failed hoses at regular

intervals. The consequences of hose failures were spillages of tritiated reactor coolant via the FM into the containment. Most spillages were terminated by automatic excess-flow valves or fail-closed isolation valves. Very rarely has such a valve failed as well. There were no fuel failures in the reactors or in the FM due to such hose breaks. The ACR fuel handling system will use light water that will have a very low concentration of tritium.

b) Damage to fuel bundles in a fuel channel. Such infrequent events occurred due to operator errors or by failures of components of the mechanisms (e.g., too many bundles loaded, lack of fuel carrier tube, malfunctioning bundle stop, rotated magazine shearing a mislocated fuel bundle). During the recovery operations, some activity was released into the FM vaults. AECL has further improved operational interlocks and mechanism force limit requirements and mechanism designs to minimize the probability of occurrence of such events on an ACR reactor.

c) Damage to a fuel channel. Such an event occurred when a FM bridge moved while the FM was attached to an end fitting. The end fitting was permanently deformed (requiring fuel channel replacement), but the FM remained attached to the end fitting. A reactor coolant leak at the FM to end fitting interface started at 1400 kg/hr (3090 lbm/hr), but after a reactor shutdown, cooldown and depressurization according to normal operating procedures, the leak rate was reduced to 8 kg/hr (18 lbm/hr) within a few hours. There were no fuel failure consequences. Interlocks were subsequently improved on all CANDU bridge and carriage drives. The design optimization of the ACR bridge and its interlock structure have further minimized the risk of this scenario.

d) Damage to parts of a FM. For instance, a guide sleeve was jammed in the magazine with consequential loss of availability of the FM. The ACR fueling machine does not use a guide sleeve, thus eliminating this particular failure scenario.

e) Stuck components (e.g., shield plug) prevented removal of fuel. Fuelling machine mechanism design and reactor coolant filtration have been improved to mitigate this issue. ACR shield plug design has incorporated features to further mitigate this issue.

Event a) as previously described, resulted in leakages of less than 4 Mg (4.4 tons) of D_2O. In most cases the D_2O discharge amounted to a small spillage. The D_2O was almost completely recovered from the sump and the containment atmosphere.

Events b), d) and e), on occasions, prevented fuel removal for several days, sometimes necessitating a reactor shutdown to prevent fuel failure or to allow defueling the channel by one FM. If defective or damaged fuel had to be removed, it increased the radioactive contamination of the RCS and of the FM, or released some activity into the containment atmosphere during removal of the defective fuel by grapples or scoops.

Only one instance of event c) occurred. This discharged tritiated heavy water coolant into the containment, and some of the containment atmosphere was vented by the normally operating ventilation system. This resulted in a minimal radioactive emission through the stack.

5.3.2.2 Fueling Machine to End Fitting Interface Failure

The following types of undesired events have occurred:

a) Improper seal between the channel end fitting and the FM snout. This resulted in some minor heavy water spillage from the FM. The adequacy of the seal between the channel end

fitting and the FM snout is routinely checked by a leak test after clamping the FM to the end fitting but before removal of the channel closure. For the ACR, this would result in a light water spillage.

b) Channel closure seal failure. The success of a channel closure sealing is routinely checked by a leak test after the channel closure has been re-installed in the end fitting but before uncoupling the FM from the end fitting.

   On a few occasions, foreign material or debris at the sealing surfaces resulted in incomplete sealing of the end of the fuel channel. The spare channel closure that the FM carries was tried, but the leak could not be stopped. The FM had to be backed off and the end fitting capped until maintenance could be carried out. ACR has an improved closure seal to further mitigate this issue.

c) FM uncoupling from an open fuel channel. When the channel is under pressure, uncoupling of the FM from the end fitting is prevented by a pressure actuated safety lock. Once, however, when a reactor was shut down, and a fuel channel was depressurized for maintenance, a FM backed off from its end fitting when the channel closure was not in place. Some spillage of heavy water occurred. This event resulted in leakage or spillage of tritiated heavy water into containment. There were no resulting fuel failures. The current AECL safety lock design as also used on the ACR FM operates under all conditions including shutdown, preventing the inadvertent uncoupling of the FM.

5.3.2.3 Fueling Machine Off-Reactor

With irradiated fuel in the FM, various events with safety implications occurred:

a) Break or puncture of inlet or outlet hoses to a FM, or coolant line, or hose breaks, which depleted the coolant in the FM causing some irradiated fuel pencils to become overheated for a short time, but there was no fuel failure.

b) Loss of pressure control in a FM. Once, after a safety relief valve opened, it failed to re-close, pressure control was lost and spillage of D_2O ensued. There was no fuel failure.

c) Loss of coolant level control in a FM. This occurred once, when spillage from a broken hose short circuited the level control connections in a distribution box on the FM and caused exposure to air of irradiated fuel bundles in the magazine of the FM. Some fuel failure ensued.

d) Mechanical failure of a FM. On one occasion, a fuel transfer ram became stuck while irradiated fuel was in the magazine above the coolant level. Operator intervention by flooding the machine with water from the spent fuel bay prevented fuel failure. Once, a magazine could not be rotated to submerge the fuel bundles located in an upper chamber, and an irradiated fuel bundle overheated and failed, and fission products were dispersed.

e) Oil spill from a FM. On one occasion, up to 230 L (60 U.S. gal.) of oil spilled from a filter break on a FM ram operated by the oil hydraulic system. There was no ensuing oil ignition. Oil hydraulics has been eliminated from the ACR fueling machine.

Inlet or outlet hose breaks on an off-reactor FM are isolated by automatic valves or within 15 minutes after the breaks by remote isolation of the flows by the operator. This is the same procedure that is used for on-reactor hose breaks.

In the events where a hose broke, a supply line weld failed, or an operator error resulted in a FM calibration port vent valve remaining open, tritiated D_2O coolant was spilled. The worst spill was about 92 Mg (100 tons) of heavy water into containment, but in all cases, the heavy water was recovered. ACR has fewer hoses with improved isolation and uses light water with a very low concentration of tritium much reducing the probability and potential severity of such incidents on ACR.

Short-circuiting of control wiring by water outside the FM is now prevented by individual water-tight caps for each wire junction, and by physical separation of the redundant control devices and their wiring. In the ACR fuel handling system, controls and instrumentation that are required to function properly during and following a Design Basis Accident (DBA) such as a LOCA or main steam line break (MSLB), are environmentally qualified and as such, will not malfunction as a result of short circuits caused by coolant spills.

5.3.2.4 Fuel Failure Outside Reactor and Fueling Machine

Fuel failures outside a reactor and outside a FM have occurred during loading of fresh fuel into a FM, and during irradiated fuel transfer from the FM.

Fresh fuel is fed manually to a new fuel loader and from there to the FM. Mechanical damage to a new fuel bundle occurred in the new fuel loader, but the damage was detected and the fuel was discarded before insertion into the FM.

Irradiated fuel from a FM is fed via the spent fuel port to a transfer device and from there to the spent fuel storage bay. In these devices, a few incidents have occurred resulting in failed fuel due to overheating. In one case, irradiated fuel remained exposed to air and failed in a fuel transfer mechanism located at the entrance to the spent fuel bay, because a closed vent valve prevented water ingress. Once a fuel bundle remained without water cooling in a spent fuel transfer port, and a similar event occurred on a spent fuel elevator. In the latter case, the elevator became stuck with irradiated fuel stranded in air for an extended period, causing the fuel to overheat and fail, and fission products to be dispersed. Spray cooling was retrofitted to devices for which such incidents could be foreseen.

On one occasion, an irradiated fuel bundle was dropped to the floor of the FM vault from the open snout of a FM. Without liquid cooling, the fuel overheated, its clad failed and its UO_2 oxidized to U_3O_8. The FMs for CANDU 6 and ACR reactors do not move around with irradiated fuel and open snouts.

In serious incidents, when fuel broke into small pieces, (e.g., in the spent fuel elevator incident), most of the activity in a fuel bundle was released into the containment atmosphere. Although off-site activity releases were minimal, radiation exposure of the recovery work force, within the permissible limits, could not be avoided.

For ACR, many of the accident scenarios that involve a loss of cooling of irradiated fuel are eliminated totally by: (a) keeping the irradiated fuel submerged in water during its transfer from the FM to the spent fuel bay; (b) incorporating emergency cooling circuits in the FM process system and the spent fuel transfer system; (c) never having the snout open while not connected to a fuel port or fuel channel.

For the rare events involving defective fuel removal, there are remotely operated grapples, and robotic devices with scoops and buckets of various degrees of sophistication.

5.3.2.5 Non-Generic Fueling Machine Events

The following events are not specific to FMs, but occurred in connection with FMs:

a) Over-exposures to FM maintenance staff. On a few occasions, in the FM servicing area, fuel handling operators received full body, extremity (hand), or skin over-exposures while performing maintenance operations which took longer than anticipated; e.g., fixing quick disconnects, repairing a flow transmitter, or when the operators estimated lower radiation fields near a FM than existed. Routine monitoring was sometimes not enough to detect the high radiation fields, or the methods of extremity dosimetry were not sufficient.
b) FM heat exchanger failure. Once a FM heat exchanger failed such that tritiated D_2O was directed to the lake via the service water system, which supplies cooling to the heat exchanger.

These events are not unique to the fuel handling system. Use of an inadequate radiation monitor during maintenance, or human errors caused the over-exposures. The heat exchangers are designed against tube wall failures, but there is a small probability of defects. Thus, the FM heat exchangers were modified such that there is now no direct heat exchange to the service water, but to an intermediate recirculated water loop, which in turn transfers the heat to the service water. In the ACR, this intermediate loop is the recirculated cooling water system.

5.3.2.6 Summary of Past Operational Experiences

CANDU reactors design and operational practices have been continually upgraded to help prevent undesired events. The undesired events in fuel handling showed no major LOCA or major accidental radioactive releases or contamination.

The releases that were experienced dispersed a few fission products and some tritiated heavy water into the containment atmosphere or the spent fuel bay water, with the containment functioning normally. The heavy water was reclaimed both in liquid and vapour phases.

In all cases where failure of irradiated fuel bundles released fission products (uranium oxide or tritium activity) into the containment, the doses to the atomic radiation workers were less than the permissible limits in effect at that time (Table 5-2). Off-site activity releases and radiation doses in all fuel handling events were within allowable limits.

Protection of radiation workers against contamination in all events was carefully controlled, but some overdoses above the limits in Table 5-2 still occurred.

There were a few events of worker exposure to excessive radiation doses during FM maintenance. The over-exposures were classified as human errors, due to improper selection or use of radiation measuring instruments. There was one event of leakage of 2.3 Mg (2.5 tons) of tritiated D_2O from a FM heat exchanger into the environmental water source. This event is not specific to the CANDU fuel handling system.

All undesired events were thoroughly investigated, and suitable mechanical, control and operational improvements were made to prevent future recurrences, or to mitigate consequences. In cases where recurrence due to human error could not be eliminated by hardware and software

changes, procedural changes and further advanced operator training were implemented as remedial measures. Naturally, to achieve safe operation of fuel handling systems, responsible management is needed by the CANDU owners/utilities.

Epidemiological surveys of the workforce at CANDU nuclear stations and at AECL research reactors, which has supported the development of CANDU reactors for more than 45 years, did not identify any health effects beyond those experienced by the population at large. This is also an indicator of CANDU fuel handling safety, since the epidemiological surveys did not distinguish the fuel handling workers from other atomic radiation workers at the CANDU reactor plants.

ACR design has included features to further mitigate these events.

5.4 Probabilistic Safety Analysis of Fuel Handling Events

5.4.1 Events Considered for Reliability Studies

The operational incidents or accidents in CANDU fuel handling were small in number and limited in range. Design changes related to some of these events have been incorporated on the ACR.

The evaluation of safety concerns for the fuel handling system includes a systematic probabilistic study of conceived undesired events, which may result in some risk of:

- nuclear criticality of fuel (will be addressed for ACR which uses SEU fuel)
- FM induced LOCA
- FM failures causing mechanical damage to fuel
- loss of cooling to fuel in the FM

These events alone or in combinations were analyzed for past CANDU stations using various probabilistic analysis techniques.

5.5 Deterministic Analyses of Postulated Accidents

5.5.1 Accidents to be Analyzed

Consistent with the depth of safety analysis for other CANDU/ACR systems and components, fuel handling sequences are extensively reviewed for each phase of the fueling process to identify all failures that may cause the degradation of spent fuel cooling and releases of activity from spent fuel bundles. From this review, a number of postulated fuel handling accidents have been chosen for detailed analysis.

The safety analyses for reactor licensing will look at a number of postulated fuel handling accidents:

- fuel criticality outside a reactor. This is a more significant issue for the ACR because of the use of SEU fuel.
- loss of reactor coolant with FM on reactor
- improper interface connections between the FM snout and the end fittings

- loss of coolant from FM off-reactor. The probability of this accident occurring for the ACR is very low because of the implementation of a back-up emergency cooling system.
- fuel stuck in transit from the FM to the spent fuel reception bay. The significance of this event for the ACR is much less than for CANDU 6 because spent fuel is submerged in flowing water at all times during spent fuel transfers.
- loss of cooling in fuel transfer device between the spent fuel port and the spent fuel bay. The probability of this accident occurring in an ACR system is low because of the implementation of a back-up emergency cooling system.
- irradiated fuel dropped in vault. The probability of this accident occurring in an ACR system is low because the FM cannot back away from the channel end fitting far enough to allow a fuel bundle to fall from the inter-space between the FM snout and the end fitting unless there is also horizontal or vertical movement
- fuel damage in the spent fuel bay.

For calculation purposes, it is assumed that, for design basis events, the fuel handling system accident occurs with all reactor safety and accident mitigating systems operating as designed with a failure of one limiting component of the system. The cases to be analyzed cover all relevant events recommended by the government regulatory guide (ref. CNSC Consultative Document C-6, Reference [3]).

5.5.2 Methods of Analysis

The questions asked in the analyses are manifold: would the event become an uncontrollable power runaway (that is, nuclear criticality outside the reactor); if the power is controllable, would there be a loss of reactor coolant, fuel heat up in or out of the reactor or the FM, fuel failure, chemical reactions, release of radioactivity to and from the containment, and radiation doses to the work force or to the public outside the exclusion zone of the nuclear power station.

To answer these questions, a number of one and multi-dimensional, special or general purpose computer codes are used, for nuclear physics, thermal-hydraulics, heat transfer, stress analysis, chemical kinetics, shielding, dispersion and diffusion of fission products, and health physics calculations.

Nuclear criticality is checked by physics codes, loss of coolant predictions by thermal hydraulic codes, and fuel heatup without liquid cooling by heat transfer codes. Fission product release from the fuel is predicted by fuel behavior codes, and the containment performance and activity transport and dispersal to the environment, and the doses to operators or to the public by various special purpose codes.

5.5.3 Fuel Storage and Nuclear Criticality

Criticality provisions have been reworked for the ACR, which uses slightly enriched uranium fuel, rather than the natural uranium fuel in CANDU 6 stations. New SEU fuel is shipped from the manufacturer and stored at site in stainless steel baskets that guarantee sub-criticality by virtue of their design, which maintains an appropriate degree of separation between the fuel bundles, and incorporates neutron absorbing stainless steel elements between each fuel bundle. The design is such that sub-criticality is guaranteed even if the basket full of fuel becomes flooded. The same design of basket is used for storing spent/irradiated fuel bundles in the spent

fuel reception bays and in the main spent fuel storage bay. After several years in the spent fuel storage bay, the basket full of spent/irradiated fuel is dried and sealed in a canister full of inert gas for on-site dry storage and eventual shipping off-site to a central repository for long term storage.

5.5.4 Events with Fueling Machine On-Reactor

A loss of coolant accident from a feeder, header, or in-core fuel channel break, while a FM is on-reactor (that is, attached to the end fitting of a fuel channel with the channel closure removed), is similar to that of the LOCA without FMs attached, except for the slightly increased coolant inventory available in the FMs (but only at one fuel channel). The resulting extended blowdown period makes such LOCAs with a FM on-reactor less severe than with a FM off-reactor.

Other loss of coolant accidents while the FM is on-reactor can be hypothesized to occur in the following ways:

- Rupture of hoses
- Loss of FM coolant flow
- Inadvertent unclamping of the FM from the channel
- Inadvertent movement of the FM bridge

A LOCA via a FM is envisaged as a consequence of breaks of the FM inlet or outlet hoses or less credibly, of some fracture of the FM housing. In either case reactor coolant would blow down through the FM at a relatively slower rate than for an end fitting failure LOCA. The resulting slightly extended blowdown period makes such LOCAs with a FM on-reactor less severe than with hose failures with a FM off-reactor. In the on-reactor case no fuel failures are expected before operator action can be credited.

Following loss of coolant flow to a FM, that FM can be remotely isolated from the rest of the FM water system. Therefore, no loss of reactor coolant inventory will take place through the FM. Cooling of the spent fuel is provided by the water trapped in the FM. The RCS coolant is expected to replenish any loss of water inventory due to any local boiling in the vicinity of the spent fuel bundles. The ACR FM has an emergency back-up water supply that will be available once the reactor pressure is reduced to shutdown pressures.

The result of inadvertent unclamping of the FM from the channel would be a reactor coolant LOCA with or without ejection of fuel bundles, plus a loss of coolant from the FM. This event can only occur if there is a malfunction of the snout clamp mechanism, and the snout safety lock fails to perform its safety function, whereupon the FM will unclamp from the end fitting and the channel pressure will push against the FM, creating a gap between the snout and the end fitting. Coincident failures of the snout clamping mechanism, its interlocks, and the snout safety lock have never occurred, and this is a highly improbable scenario.

The result of inadvertent movement of the FM bridge would range from a leak at the interface between the fueling machine snout and the channel end fitting, to an end fitting failure with fuel ejection, with damage to other end fittings and a loss of coolant from the FM. It is postulated this could be caused by a bridge controls malfunction to drive the bridge up or down, or to allow the bridge to drift down, while the FM is clamped to an end fitting. If the displacement continues,

the leak will increase and the end fitting will bear against adjacent end fittings, causing them to bend.

The bridge and snout drive safety interlock system and the engineered safety features of the FM supports ensure that this is an incredible event.

5.5.5 End Fitting Damage Caused by Fueling Machine In-Transit

Damage to end fittings caused by the fueling machine while it is in transit across the reactor face approaching a channel for fueling or departing from it after completion of fueling is hypothesized to occur in two ways:

- Loss of fueling machine support.
- Fueling machine advances to the reactor face.

It is postulated that a loss of FM support could severely damage one or more end fittings. The bridge elevators or their controls malfunction to drive asymmetrically, creating a bridge tilt. If the tilt worsens unchecked, the FM assembly could fall towards the reactor face and damage one or more end fittings.

The safety interlock system and the engineered safety features of the FM supports ensure that this is an incredible event.

It is postulated that, while the FM is traversing the reactor face, a malfunction causes it to advance and interfere with the end fittings. However, for the reasons identified below, this can only result in superficial damage to the end fittings:

- The force of the advance motion is relatively low.
- The FM can tilt in pitch and yaw against centering springs, so that it is unlikely to become hung up on an end fitting.
- The channel lattice pitch of the ACR is small enough to prevent the FM snout from maneuvering itself between adjacent end fittings.

5.5.6 Loss of Fuel Cooling in a Fueling Machine Off-Reactor

The ACR FM system includes an environmentally and seismically qualified emergency back-up water system that mitigates instances where the fuel in the FM will not be cooled.

5.5.7 Uncontained Fuel Heatup

It could be postulated that a pair of spent fuel bundles could be ejected from a malfunctioning fueling machine, or left in air during spent fuel transfer. However, the probability of either of these accidents occurring in an ACR system is very low for the following reasons:

- The FM cannot back away from the channel end fitting far enough to allow a fuel bundle to fall from the inter-space between the FM snout and the end fitting unless there is also horizontal or vertical movement.
- Spent fuel is submerged at all times during spent fuel transfers.

The consequence of these failures is less than a FM induced end fitting failure which could result in up to 12 fuel bundles being ejected to the vault floor. Therefore, this event is treated as a special case bounded by an end fitting failure reactor coolant LOCA.

5.5.8 Spent Fuel Bay Incidents

Heat-up of the water in the spent fuel bay could result either from a loss of flow in the cooling/purification circuit, or from a loss of service water to the heat exchangers. For all cases, high water temperature alarms would be initiated. For CANDU 6 stations, and assuming the maximum irradiated fuel heat load in the bay, the high temperature alarm would be triggered within three hours at the earliest, after the loss of cooling, and the water would start bulk boiling within three days at the earliest, after the loss of cooling. This calculation was done conservatively, without crediting the heat capacity of the bay structures or heat losses from the bay. Three days is ample time for the operators to restore the cooling. There would be no fuel failure and fission product release caused by the slowly boiling bay water. The concrete walls of the bay, however, might suffer hairline cracks, but the overall structural integrity of the bay would be maintained. Unlike earlier CANDU 6s, the latest CANDU 6 and ACR spent fuel bays have stainless steel liners, which will minimize the impact on the bay walls.

A loss of fuel bay inventory (say by leakage through the spent fuel transfer system) would trigger a low level alarm at least 4 m (13 ft) above the highest stacked spent fuel bundle containers. Subsequent to the alarm, there would be at least 10 hours before the water level would drop to the top of the spent fuel baskets, assuming an inventory loss rate limited by that possible through a fuel transfer port. This is ample time for the operators to stop the outflow, or to provide make-up water from an emergency service water supply. This incident would not result in fuel failures with fission product release. The ACR spent fuel transfer system is a closed, water filled system, in which four motorized valves would have to malfunction to create an outflow from the bay: two reactor building containment valves, an isolation valve between the transfer tube and the spent fuel transfer mechanism, and an isolation valve between the spent fuel transfer mechanism and the spent fuel reception bay. In addition, the reception bays, where the spent fuel transfer tubes penetrate the bay walls, can be physically isolated from the main storage bay and allowed to drain, provided that the few spent fuel baskets that are temporarily stored in the buffer areas in the reception bays are first moved to the main storage bay.

For the case of a full fuel storage basket being dropped from a crane into the bay, failure of about 10% of the fuel elements in the basket was conservatively predicted due to the impact. The water soluble fission products are cleaned up by the bay purification system. Only a part of the noble gases and of the iodine in the defective fuel elements would reach the atmosphere above the bay, and their release would have a minimal impact on the existing airborne activity burden, which is caused by a very low defect rate in the large number of fuel bundles in a bay.

5.5.9 Seismic Events

An analysis of the consequences of earthquake induced accidents with the FM on-reactor are not required, since the FMs are designed to be seismically qualified for a Design Basis Earthquake (DBE). This means that fueling machines and their support structures and control systems are designed so that a fueling machine will not unclamp from, or damage an end fitting as a result of a DBE.

The radiological consequences of an earthquake have been analyzed for loss of cooling to the FMs containing irradiated fuel. However, the ACR FM system includes a seismically qualified emergency back-up water system that virtually eliminates the possibility that the fuel in the FM will not be cooled during and following a DBE.

The radiological consequences of an earthquake have been analyzed for two high power irradiated fuel bundles overheating in air in the transfer port/mechanism to the spent fuel bay. This could occur in a CANDU 6 plant, since on a postulated loss of electrical power at the onset of a DBE the defueling sequence may not be completed at the irradiated fuel port. However, this event is not applicable to ACR spent fuel transfers during which the spent fuel is always submerged. In addition, the seismically qualified FM emergency back-up water system can direct flow to the spent fuel transfer system.

The containment system is seismically qualified, but for calculating the doses to the population outside the containment, it was assumed that the containment is not isolated for one hour after the earthquake. The combined predicted releases and doses were found to be acceptable.

5.5.10 Summary of Consequence Analyses

The risks and possible consequences of postulated accidents are evaluated by analytical simulations of the events, and when needed, supported by tests.

Nuclear criticality is prevented by storing and transporting fuel in stainless steel baskets that guarantee sub-criticality by virtue of their design,

Deterministic analyses will be performed on postulated on-reactor and off-reactor fueling machine events that result in a possible release of radioactive fission products.

Loss of cooling or loss of coolant inventory incidents in the spent fuel bay would be manageable by the operators without causing fuel failures. Dropping a fuel storage basket into the bay would slightly increase the airborne activity in the atmosphere above the bay.

The loss of cooling of spent fuel in a fueling machine or spent fuel transfer system has been virtually eliminated by the incorporation of a seismically and environmentally qualified emergency water system.

5.6 Conclusions

In the more than 450 reactor years of accumulated CANDU fuel handling experience, there has been no serious accident causing harm to the operators or the public. Some incidents with minor dispersal of activity, within or even outside containment occurred, and in some cases operators received more irradiation than permitted.

The evaluation of the probability of the conceived undesired events shows that fuel failures and fission product releases due to loss of cooling within a FM or due to fuel ejection to a vault floor are probable top events of the fuel handling system failures, but with very low frequencies of occurrence. The probabilistic predictions of the frequencies of occurrences are so far supported by over 450 years of operating experience.

The consequences of fuel handling system failures are predicted to be less severe than allowed by the government licensing regulatory guides. The deterministic analyses of postulated events have been supported by tests, and by the outcome of the relatively minor fuel handling related

incidents that have occurred at CANDU stations. For each CANDU station, safety analyses are completed to show that the operation of the fuel handling systems will not pose an unacceptable risk to the public. Epidemiological evidence suggests that neither the workforce nor the public has suffered from fuel handling (or any other CANDU) operation to date.

The probabilistic and deterministic analysis described in this section is based on existing CANDU stations. Further analysis will be performed to address ACR-specific scenarios. Based on design improvements added to ACR fuel handling, including increased redundancy, significant improvements, to the already acceptable analysis results, are expected.

Table 5-1
Dose and Release Limits

(taken from CNSC C-6, Reference [3])

Requirement	Event Class				
effective dose (mSv)	0.5	5	30	100	250
lens of the eye (mSv)	5	50	300	1,000	1,500
skin (mSv, averaged over 1 cm^2)	20	200	1,200	4,000	5,000
30 day emissions of liquid effluent are within the derived annual emission limits for normal operation	✓	✓	N	N	N

✓ the limit shall be met by the worst failure sequence in the event class.

N not required.

Table 5-2
Dose Limits in Effect for Earlier CANDU 6 Stations

(taken from Reference [4])

Organ or Tissue	To Atomic Radiation Workers		To Any Other Person
	mSv (rem) per ¼ year	mSv (rem) per year	mSv (rem) per year
Whole body, gonads, bone marrow	30 (3)	50 (5)	5 (0.5)
Bone, skin, thyroid	150 (15)	300 (30)	30 (3)
Any tissue of hands, forearms, feet and ankles (extremities)	380 (38)	750 (75)	75 (7.5)
Lungs and other single organs and tissues	80 (8)	150 (15)	15 (1.5)

Table 5-3
Representation of the International Nuclear Event Scale (INES)

Type of Event	Level	Description	Consequence in Terms of Radioactivity Release, Dose, Protective Measures
Accident	7	Major accident	Off-site release radiologically equivalent to I-131 release of > 10000 terabecquerels (270,000 Ci). Acute and delayed health and environmental effects over wide areas.
	6	Serious accident	Off-site release radiologically equivalent to I-131 release of 1000 to 10000 terabecquerels (27000 to 270,000 Ci).
	5	Accident with off-site risks	Off-site release radiologically equivalent to I-131 release of 100 to 1000 terabecquerels (2700 to 27000 Ci). Partial implementation of emergency plans needed to lessen the likelihood of health effects.
	4	Accident mainly in installation	Off-site release with dose to most exposed individual a few millisieverts (< 1 rem). Local food control needed. On-site worker's dose > 1 sievert (100 rem). Some damage to reactor core.
Incident	3	Major or serious incident	Off-site release with dose to most exposed individual a few 0.1 to 1 sievert (10 to 100 rem). Off-site protective measures not needed. Overexposure of on-site workers with individual doses 0.05 to 0.1 sievert (5 to 100 rem).
	2	Incident	Undesired event which, although not directly or immediately affecting plant safety, are liable to lead to subsequent re-evaluation of safety provisions.
	1	Anomaly	Functional or operational undesired events which do not pose a risk, but indicate a lack of safety provisions
Non-Event	Below Scale	No safety significance	Operational limits and conditions not exceeded and event manageable with adequate procedures.

6. ACR SPECIFIC FEATURES

Many features of the CANDU 6 fuel handling system are applicable to the ACR design. The CANDU 6 fuel handling system is described in Appendix A. This section identifies some of the main differences between the ACR and CANDU 6 fuel handling systems.

6.1 Improved Channel Closure and Guide Sleeve Elimination

The ACR channel closure design differs from the CANDU 6 seal disc design described in Section A.11 of Appendix A. The new in-bore channel closure design was produced to accommodate the smaller lattice pitch and improve fuel handling operation through the elimination of the guide sleeve. As a result of this new design, the guide sleeve assembly described in Section A.9 of Appendix A is no longer required. The new channel closure design allows the end fitting internal diameter to be the same as the pressure tube for ease of fuel handling, and is expected to be less susceptible to debris collecting in the area of the seal than the seal disc type closure. The new design uses a flexible seal ring, the edge of which mates with a groove in the inside of the end fitting just adjacent to the feeder connection.

The guide sleeve and its insertion tool have in the past been the subject of several reported malfunctions and operator errors such as the one described in Section B.6 of Appendix B. The elimination of the guide sleeve also eliminates the complex guide sleeve insertion tool and reduces the potential for a malfunctioning fueling machine to require recovery from a reactor end fitting.

6.2 Improved Drives

The oil hydraulic drives and valves described in Section A.18 of Appendix A have been eliminated from the ACR fueling machine and are being replaced with brushless DC servo motors and solenoid valves. This change eliminates the failures and malfunctions specific to oil hydraulic controls:

- A sticking solenoid valve, due to oil varnish, which can compromise a single drive or block a port of a servo valve to compromise its operation
- A failed oil hose (catenary) or tube, that compromises all the hydraulic drives and motorized valves that are connected to that line
- Vibration induced cracking of the main oil supply piping

Electric drives are considered more reliable than oil hydraulic drives. In addition, potential problems will be mitigated as follows:

a) Fully redundant motors (with integral brakes and incremental resolvers where appropriate) will be provided for drives that will be inaccessible for any portion of the fuel handling operation. The redundant electric motors will eliminate the need to provide openings with removable plugs in the reactor vault floor in order to access emergency manual drives with remote tooling as described in Section B.5 of Appendix B.
    - Each drive will be provided with dedicated motors. That is, electromagnetic clutches will not be used to share motors with multiple drives.

- The redundant motors will be provided with dedicated connected controls (motion controllers and power amplifiers, or motor starters as appropriate), to maximize the redundancy concept.

b) The motors and power amplifiers will be sized so that, if required, the motor can drive through the brake and operate the mechanism long enough to bring the FM to a safe and accessible state. This will require temporarily changing the torque/current limit, and may require operating the drive at reduced speed, and subsequent replacement of the brake.

c) Motor/brake coordination will be controlled to avoid using holding brakes as dynamic brakes.

d) Motors and brakes will be sized in accordance with the maximum normal duty cycles (duration of operation; frequency of operation)

6.3 FARE Tool Elimination

The higher channel flows and the flatter radial profile of the ACR reactor, compared to CANDU 6, eliminate the need for the flow assist ram extension (FARE) tool described in Section A.13 of Appendix A. This simplifies the ACR refueling process.

6.4 Emergency FM Water Supply

In addition to the normal FM water system with its redundant supply pumps, the ACR FM system includes a seismically and environmentally qualified emergency water system to maintain fuel cooling when the FM is off reactor during and following a DBE, LOCA or MSLB, or if the normal system becomes unavailable. The flow can be directed to the spent fuel transfer tube or magazine.

6.5 Improved Spent Fuel Transfer

As the ACR uses light water for heat removal versus the heavy water used by the CANDU 6, the ACR fueling machine contains light water. Since the spent fuel handling and transfer system also contains light water, there is no longer any need to lower the FM magazine fluid level prior to pushing fuel bundles through the spent fuel port as described in Section A.19.3.1.1 of Appendix A. As the transfer of spent fuel from the fueling machine no longer needs to be performed in air to avoid heavy water downgrading, the concerns associated with a stuck fuel bundle as described in Section A.19.3.1.2.1 of Appendix A are significantly reduced. A standby cooling system, as described in Section A.19.4.8 of Appendix A under “Irradiated Fuel Auxiliaries” is no longer required. Nevertheless, an emergency cooling supply is provided to the spent fuel transfer system (refer to Section 6.4).

Spent fuel is transferred directly from the FM to the spent fuel receiving bay without the need to move the fuel to a lower elevation. The spent fuel elevator, which is a complex mechanism, is thus eliminated. In addition, the conveyor systems that transport the spent fuel between the reactor building and the receiving bay have been replaced by a process system that moves the spent fuel under water hydraulic drag.

6.6 Criticality

The use of SEU over NU increases the possibility of criticality. To address this, special baskets are being designed to guarantee sub-criticality in all mediums. Such baskets will be used at the fuel suppliers and for shipping of new fuel. The fuel will be kept in these baskets until required for refueling the reactor. Spent fuel will be stored in similar baskets in the spent fuel bay and in dry storage.

6.7 Fuel Bundle Shift

Refueling is the reactor long-term control system for maintaining satisfactory steady-state operating conditions. The rate of refueling is adjusted to compensate for the reduction in core reactivity due to burnup. Fuel management deals with the choice of the best fueling scheme – one which will give satisfactory power shape, low maximum channel and bundle powers and low fueling frequency. For the ACR with SEU fuel instead of the natural uranium fuel of CANDU 6, the optimum fueling scheme has been determined to be a 2-bundle-shift as opposed to the 8-bundle-shift employed on CANDU 6s.

6.8 Shutdown Defueling

Normal on-power refueling is flow assisted. It relies on channel flow to generate a differential pressure across the fuel string that pushes the fuel string towards the fueling machine which is attached to the downstream end of the channel (refer to Section 2.5). When the reactor is shut down, this high channel flow is unavailable. However, each ACR fueling machine incorporates a means of creating high channel flow towards it, so that either fueling machine can quickly defuel any channel independently of the other fueling machine. This feature is available only under shutdown conditions.

This enhancement provides the following benefits:

- Quick defueling of several channels for channel inspections during unit outages.
- Quick defueling of a channel, as part of a fueling machine recovery operation, when one of the fueling machines has become disabled while attached to the channel with the closure removed.
- Refueling of channels during unit outages.

7. CONCLUSIONS

On-power fueling:

- contributes to a high capacity factor
- reduces excess reactivity
- provides more flexibility in planning shutdown activities
- leads to improved reactor coolant chemistry
- keeps fuel costs low
- allows more fuel-cycle flexibility.

In the more than 450 reactor years of accumulated CANDU fuel handling experience, there has been no serious accident causing harm to the operators or the public. For each CANDU station, safety analyses are completed to show that the operation of the fuel handling systems will not pose an unacceptable risk to the public. Epidemiological evidence suggests that neither the workforce nor the public has suffered from fuel handling (or any other CANDU) operation to date.

The CANDU fuel handling systems have been proven to be reliable and station incapability due to fuel handling is traditionally less than 1%.

Some of the main differences between the ACR and CANDU 6 fuel handling systems are:

- elimination of the guide sleeve and guide sleeve tool
- electric drives in lieu of oil hydraulic drives
- elimination of the FARE tool
- wet transfer of spent fuel
- higher reactivity fuel
- 2-bundle-shift rather than 8-bundle-shift
- emergency FM water supply

Some of the differences simplify the fuel handling system while most increase the reliability of the fuel handling system.

8. REFERENCES

[1] 10810-01371-TED-001, Revision 0, "ACR-700 Technical Description", 2003 July.

[2] TTR-305, Revision 0, "The Technology of CANDU On-Power Fuelling", 1991 January.

[3] CNSC Consultative Document C-6, Revision 1, "Requirements for the Safety Analysis of CANDU Nuclear Power Plants", issued for comment 1999 September.

[4] "Atomic Energy Control Regulations", AECB Office Consolidation Document, 1986 February 27.

[5] "The International Nuclear Event Scale", IAEA and OECD Nuclear Energy Agency, 1999.

Appendix A

Description of CANDU 6 On-Power Fueling System

Note: This Appendix is a reproduction of Chapter 3 of document TTR-305: "The Technology of CANDU On-Power Fueling" with minor editorial changes. This document was submitted to the NRC in 1991. Some of the information on radiation doses is now out of date.

A.1 Introduction

This chapter covers the fuel handling system, its principles of operation, a broad description of the equipment involved, its duty cycle and associated reactivity considerations. It will generally focus on the CANDU 6 design.

The system is designed for operations availability on the reactor for 75% of the year, with a service incapability factor of 0.6% at station maturity, that is, five years after the in-service date.

The following design values of maximum radiation fields are applicable:

a) General access (fuel handling areas) 154.8×10^{-9} C/kg/h (0.6 mR/h)

b) Infrequent access (maintenance of equipment) 322.5×10^{-9} C/kg/h (1.25 mR/h)

c) Emergency access (using temporary shielding when necessary) 516×10^{-9} C/kg/h (2.00 mR/h)

The total absorbed radiation dose of a fueling machine (FM) maintainer is to be limited to 25 mGy (2.5 rad) per year.

All equipment is designed to withstand response spectra based on design basis earthquake (DBE) conditions appropriate to the station site to ensure integrity of the pressure retaining components.

The mechanical portion of this chapter includes descriptions of the following subjects:

Fuel Handling and Storage System
New Fuel Transfer and Storage
Fueling Machine (FM) Head
Channel Closure, Shield Plug, Snout Plug and FARE Tool
FM Bridge and Maintenance Lock Tracks
FM Carriage and Suspension
Irradiated Fuel Discharge Equipment
Defected Fuel Canning
Irradiated Fuel Transfer Equipment
Semi-Automated Irradiated Fuel Transfer
Storage Bay
Irradiated Fuel Dry Storage

The controls portion of this Appendix includes descriptions of the oil hydraulics auxiliary system, the FM head D_2O system, and the control and instrumentation for the above subjects.

A.1.1 Purpose of the Fuel Handling System

The purpose of the fuel handling system is to provide on-power, bi-directional fueling capability at a rate sufficient to maintain continuous reactor operation at full power.

A.1.2 System Description

A.1.2.1 Introduction

The fuel handling system is made up of two F/Ms, two FM support carriages and associated supporting tracks, two reactor vault bridge/column assemblies, two each of new fuel loading, irradiated fuel unloading and FM calibration facilities, one irradiated fuel transfer system, plus all associated auxiliaries, power supplies and control systems.

The fuel handling system can be divided into three interrelated systems: new fuel transfer, fuel changing, and irradiated fuel transfer. Figure A-1 shows the movement of fuel from the new fuel storage area through the reactor to the irradiated fuel storage bay.

A.1.2.2 New Fuel Transfer

The fuel arrives at site in pallets. Up to a nine month supply is stored in the service building new fuel storage room (Figure A-2, Item 27). As required by station operation, the pallets are transferred to the new fuel loading area located inside the reactor building. There, the fuel bundles are uncrated, inspected and transferred to the new fuel transfer room.

There are two new fuel transfer mechanisms (Item 10), one for each FM, serving each face of the reactor. Up to 12 fuel bundles can be stored in the new fuel magazine of each new fuel transfer mechanism, from where they are transferred, two bundles at a time, into the FM located in the maintenance locks (Item 9).

Each fuel bundle is inspected during the loading process to check for defects.

Loading of new fuel into the new fuel mechanisms is done under local manual control, while the transfer of new fuel from the new fuel transfer mechanism magazines to the FM magazines is normally done under computer control.

A.1.2.3 Fuel Changing System

The fuel changing system comprises two FMs (Figure A-2, Item 4), one on each reactor face, two FM head support carriages with associated catenary trolleys (Item 7) and two bridge-column assemblies (Item 2). The FMs are designed to interface with the fuel channel assemblies in order to transfer fuel on power while retaining heat transport system integrity. At the reactor site there is a total of three FMs (two operating FMs and one spare). Any one of the reactor FMs can operate at either reactor face.

The fuel channel assemblies (Figures A-3, A-4) locate and support the fuel bundles inside the reactor and form part of the primary heat transport system. There are 380 fuel channels in CANDU 6, with heavy water flowing through each channel and over the fuel bundles, removing up to 6.5 MW of heat per channel.

A fuel channel assembly consists of a pressure tube, two end fittings and associated hardware.

The pressure tube is connected by an expanded joint to an end fitting at each end. The pressure tubes are located inside the reactor calandria tubes which isolate the pressure tubes from the heavy water moderator in the calandria. The annular gap between the pressure and calandria tubes is filled with an insulating and protective gaseous atmosphere. Tube spacers in the annulus support and centralize the pressure tubes in the calandria tubes. The annulus is sealed at both ends by a bellows assembly rolled into and welded to the fueling tubesheet and also welded to the bellows attachment ring (shrunk onto the end fitting).

The end fittings are supported on two bearings at each end of the fuel channel. A positioning assembly at each end of the channel provides 'fixed' or 'free' end conditions to allow for thermal expansion and pressure tube creep.

The primary heavy water coolant flows into and out of the end fitting side-ports which are connected to the feeders by couplings. Inside the end fitting, coolant flows around a liner tube. Flow connection to the pressure tube is through holes at the inboard end of the liner tube.

The outboard face of each end fitting makes a sealed connection with the FM for fuel insertion and removal. When the FM is not engaged to the channel, the end fitting is sealed by a channel closure. The closure can be removed, stored, and reinstalled by the FM, during refueling.

Each end fitting liner tube houses a shield plug which is removed and stored in the FM during fueling operations. The shield plugs are located in the end fitting liner tube and provide the required shielding and axial location of the fuel bundles.

Once loaded with new fuel, the FM traverses to the reactor face and connects to a fuel channel. A second empty FM connects to the same fuel channel at the other side of the reactor. Automatic fuel changing operations then commence, with new fuel bundles being loaded at the upstream end while an equivalent number of irradiated fuel bundles are received by the downstream FM. Bundle movement is controlled by the two FMs, but assisted by the coolant flow inside the channel. Because the flow in each alternate channel is reversed for reasons of reactor symmetry, the FMs must be capable of operating bi-directionally, that is, the upstream machine can perform the functions of the downstream machine and vice versa.

In a typical eight bundle fueling sequence (Figure A-5), the following fuel movements inside the fuel channel can be identified:

- eight new bundles are inserted, two bundles at a time, from the upstream end.
- The whole 20 bundle fuel column (12 old bundles plus eight new bundles) is moved towards the downstream end.
- eight irradiated bundles are discharged, two at a time, from the downstream end.
- The remaining 12 bundle fuel column is moved back to the correct in-reactor position.

On completion of the fuel changing operation, the downstream machine traverses to the irradiated fuel port located in the maintenance lock.

A.1.2.4 Irradiated Fuel Transfer

Irradiated fuel is discharged from the FM through the irradiated fuel ports (Figure A-2, Item 12), located in the walls between the FM maintenance locks and the irradiated fuel discharge room.

Two ball valves are mounted in series in each discharge port to seal the port and complete the containment boundary. The discharge room is considered outside the containment boundary, and when fuel is being transferred the FM becomes part of the containment boundary.

The irradiated fuel discharge operation is performed in air from the point where the fuel bundles leave the D_2O environment in the FM magazine until they are lowered into the water in the discharge room by either one of two elevators (Item 17), depending from which FM the fuel is delivered.

The discharge bay (Item 11) is connected by an underground canal to a reception bay (Item 19) which in turn connects to the irradiated fuel storage bay (Item 23).

The elevators in the discharge room lower the irradiated fuel bundles, two at a time, onto a rack on a conveyor (Item 18) which transfers the bundles through the canal into the reception bay (Item 19). In the reception bay, the bundles are transferred onto trays for interim storage in the bay. The fuel trays are moved from the reception bay to the storage bay by the irradiated fuel transfer conveyor. In the storage bay, the trays are stacked one on top of the other, by an operator from a manbridge. The trays are normally stacked no more than 19 high as a minimum free water depth of 4.1 m (162 in) must remain between the top bundles and the water surface to ensure negligible radiation levels in the accessible area surrounding the irradiated fuel bay. The storage bay capacity for CANDU 6 allows for 10 years of reactor full power operation.

After the fuel leaves the reception bay, all operations are performed manually using tools suspended from the bay crane. Defected fuel is segregated from normal irradiated fuel in the discharge bay, and then is stored in a carousel type container for an initial decay and degassing period. Finally, it is canned and transferred to the defected fuel storage bay (Item 21) for long term storage.

Defected fuel is identified through two systems: the gross activity monitoring system and the defected fuel location system. The gross activity monitoring system continually monitors the two loops of the heat transport system for fission products indicative of a fuel defect. The defected fuel location system identifies the fuel channel containing the defected fuel and further indicates when the defected bundle or bundles have left the channel flow during the refueling operation. The location of the defected fuel bundles in the machine magazine is then known, so that, on arrival in the irradiated fuel discharge bay, the bundle pair can be manually segregated.

A.1.2.5 Fuel Handling Control

A fuel handling control console is provided in the station main control room. From here the fuel handling operations are controlled, except for the loading of new fuel into the new fuel transfer magazine and the semi-automated and manual operations of irradiated fuel storage. Two main digital control computers are available for reactor control: one in operation and the other on standby. The major portion of fuel handling operations are handled automatically by the standby digital control computer. This includes initiation of the semi-automatic irradiated fuel handling operations in the reception bay.

Two identical and complete separate control systems are provided, one for each FM. The only communication between the two systems occurs during the fuel column movement in a channel, and initially on channel closure plug removal to check that both machines are at the same fuel channel.

The mode of control is selected at the control room fuel handling control console. Four modes of control are available: automatic run, automatic step, semi-automatic and manual operation.

Automatic run is the preferred mode of operation. In this mode of control the station digital computer takes command once a fuel channel and "job" are selected, and continues until refueling is completed. Communication between the computer and the instrumentation and control devices permits the computer to maintain control and perform the fuel changing operation. Only if a malfunction occurs should it be necessary for operator intervention.

In the automatic single step mode of control the computer controls the fueling operation, however, after each step of a sequence is completed, the computer must be commanded by the operator to proceed to the next step.

Semi-automatic operation consists of keyboard statements supplied by the operator independent of any 'job' or 'sequence', which are then executed automatically under computer control.

Manual operation requires the operator to perform each step by operating the functional controls on the control console. The operator checks for completion of each step using the console indicators, and then initiates the next step.

A 'protective system', which is a set of logic relays, has all the output control commands (both computer controlled and manual) routed through it. Its function is to prevent, through the use of interlocks, major damage to equipment or creation of a hazardous environment for personnel. The logic of this system is separate and in addition to that provided in the computer. The interlocks can be by-passed by handswitches located at the control console only with proper authorization, which must be obtained beforehand.

The control room fuel handling console consists of two identical sections, one for each FM and a control panel for common systems. Apart from the control panels, each FM section contains a cathode ray tube for data display, an 'operate panel' to communicate commands and select desired displays, and an alpha-numeric keyboard for operator communications with the computer.

A.1.3 Operating Principles

A.1.3.1 Duty Cycle

The normal fueling duty cycle is made up of the incremental movements of the FMs as they traverse between the maintenance locks and the reactor vaults, inserting new fuel into the reactor and removing irradiated fuel.

Assuming continuous reactor full power operation, the rate of fueling in the equilibrium state is 112 bundles per week. Note that for approach to the equilibrium condition this rate is different, as described in Section A.1.3.2.

The normal fueling duty cycle is based on fueling seven days per week, and considers the addition and removal of 16 bundles per day, with bundles handled at a rate of eight bundles per channel fueled.

The minimum time required to fuel a channel can be divided into four separate duty cycles:

a)	At New Fuel Port	26.4 min
b)	Traversing to and from reactor face	12.5 min
c)	On-reactor duty cycle	60.3 min
d)	At Irradiated Fuel Port	28.7 min
	Total:	127.9 minutes or 2.13 hours

For two channels per day, the minimum fueling time would be 4.26 hours. Adding in a performance factor of 1.5 to provide for operator efficiency, routine calibration and check-out, the daily fuel handling system availability must not be less than 6.4 hours. Fuel handling system availability therefore must be about 28% per day to maintain full power operation in the equilibrium burn-up state, assuming a seven day per week fueling operation.

If a five day per week operation is introduced, a system availability of not less than 9.6 hours or 40% per day would be required for those days when three channels per day are refueled. For two channel refueling days, the system availability would be as in the preceding paragraph. The normal average rate of refueling of 112 bundles per week would require three three-channel refueling days for each two-day channel refueling day.

A.1.3.2 Approach to Equilibrium Burn-up

As mentioned before, the normal rate of fueling in the equilibrium state is 112 bundles per week, assuming sustained reactor full power operation. To obtain the equilibrium state, the new core load and its effect on reactivity must be considered. Because of built-in excess reactivity in the fresh core, there is a time period of approximately 120 days of full power operation during which refueling operations are not required. However, after that, fueling must proceed at about twice the normal rate (i.e., up to 50 bundles per day) for a three to six week period to compensate for an increased rate of reactivity decrease with burn-up.

A.2 New Fuel Transfer and Storage System

A.2.1 Introduction

The new fuel transfer and storage system covers the new fuel transfer process, from the delivery of new fuel pallets to the stations to the reception of new fuel bundles into the FM. It can be divided into two parts:

a) New fuel storage and handling, which extends from delivery of new fuel to the movement of this fuel into the new fuel transfer mechanism. These operations are performed manually.
b) The new fuel transfer mechanism, which loads new fuel bundles into the FM. This operation is performed under computer control.

A.2.2 Purpose

The purpose of the new fuel transfer system is to provide a safe and reliable way of supplying the two FMs with sufficient quantities of new fuel in order to maintain full-power operation. Since refueling is normally carried out with the reactor at power, the system also provides the facility to load fuel in an accessible area for transfer into the FMs, to which access is limited.

A.2.3 System Description

A.2.3.1 Storage and Handling up to the New Fuel Transfer Room

The new fuel for the 600 MWe CANDU reactor consists of 37 fuel sheaths per bundle (Figure A-6).

The bundles are individually packed in styrofoam containers, 36 bundles to a pallet, each pallet weighing about 900 kg (2000 lbf). The pallets arrive at the station via truck. Once the truck is parked at the unloading dock, the shipping personnel will use the service building hall crane with a pallet fork attachment to lift the pallets, two at a time, from the truck to the service building temporary loading area. The pallets are visually inspected to ensure that there was no damage during transit. A fork lift truck will then move the pallets, one at a time, to the new fuel storage area in the service building, and place them on specially designed racks for storage. Up to nine months supply of pallets can be stored in this room.

Each week enough fuel for one week's operation, normally 112 bundles or about three pallets, will be removed from the new fuel storage room via fork lift truck and placed in the service building crane hall. Using the service building hall crane, the fuel, two pallets at a time, are raised using a crane attachment and transported to the equipment airlock laydown area.

The pallets are next moved, two at a time, through the equipment air-lock using a pallet truck.

From the reactor side of the air-lock, the pallets, two at a time, are transported and lowered, using the 13600 kg (15 ton) reactor building crane with another crane attachment, to the new fuel transfer room (Figure A-7). The fuel is placed, two pallets high, in the storage area of the new fuel transfer room. Normally, there are six pallets in the new fuel transfer room.

A.2.3.2 New Fuel Transfer Room

Once a fuel pallet has been moved into the new fuel transfer room, an operator will open it and unwrap the individual fuel bundles. He will pick up one bundle at a time and move it onto the bundle inspection table via the bundle lifting tool attached to the air-balanced hoist. He carefully inspects the bundle size with the fuel spacer interlocking gage. He also ensures that each bundle is free of damage and foreign matter prior to loading.

The loading operation is preceded by a status check of the transfer mechanism to ensure that the system is ready.

Status of Transfer Mechanism Prior to Loading:

- All electrical and air systems are on.
- Magazine active vent is open (i.e., the vapor recovery system is on).
- Shield plug is locked in new fuel port.
- Transfer ram and loading ram are fully retracted.
- Air lock valve is closed.
- Magazine is empty of new fuel.

The actual loading operation is divided into a series of steps. Each step is a permissive for the one following. Confirmation of the successful completion of each step is indicated by either a limit switch or a shaft encoder.

All steps, except the first which is a manual operation, are controlled from the control panel mounted on the transfer mechanism.

- Manually open trough lid, load two fuel bundles into the loading trough and close trough lid.
- Index transfer mechanism magazine until an empty magazine position is in line with the loading trough.
- Open air lock valve to fully open.
- Advance loading ram to fully advanced position.
- Retract loading ram to fully retracted position.
- Close air lock to fully closed.
- Repeat above steps until the required number of bundles are loaded.

A.2.3.3 Transfer to FM

The transfer of fuel bundles from the transfer mechanism magazine to the FM magazine is normally performed under complete computer control. It is possible to operate the transfer mechanisms manually, using the switches on the main control room console, but the benefit of computer software checks will be lacking when manual mode is in use.

There is no provision on the local control panel to initiate this transfer. Prior to beginning the transfer sequence, the FM D_2O level is lowered below the snout level and the FM is clamped onto the new fuel port.

To ensure that the FM is ready to begin the sequence the computer memory is checked to see that the FM snout plug is in its magazine station and the guide sleeve has been installed in the snout. The feedback must indicate that all rams are at home positions without the ram adapter. The FM rams are not used in this sequence and must be clear of the magazine.

The feedbacks of new fuel system also check to ensure that the airlock valve is closed, that there is fuel in the new fuel magazine stations and that the new fuel magazine is not in use.

All conditions being satisfactory, the new fuel magazine is rotated to the shield plug station, the new fuel ram is advanced to remove the shield plug from the port and then retracted to deposit the shield plug in the magazine for storage.

The commands are then given to rotate the FM magazine to an empty station and the new fuel magazine to a full station. The new fuel transfer ram is then fully advanced to push two new fuel bundles into the FM magazine station.

The feedback of the new fuel transfer ram being fully advanced means that the two new fuel bundles have been transferred from the new fuel magazine to the FM magazine. The new fuel transfer ram is moved back to the home position. The FM and new fuel magazine are rotated to the next stations and two more fuel bundles are transferred. This process is repeated until the FM magazine contains the required number of bundles.

After completion of the bundle transfer, the shield plug is reinstalled into the new fuel port and locked in place.

The FM then removes the guide sleeve from the new fuel port, installs its snout plug, raises the D_2O level and unclamps from the new fuel port in order to transfer to the reactor face.

A.2.4 Equipment Description

A.2.4.1 Jib Cranes

Before loading new fuel bundles, a pallet must be moved from the storage area to the loading area in the new fuel transfer room. Two 1800 kg (2 ton) jib cranes are mounted in the corners of the new fuel transfer room above the fuel transfer mechanisms, to move pallets of new fuel and pieces of equipment within the room. They are provided with electrically powered hoists (Figure A-7, Item 8).

A.2.4.2 Air Balance Hoist

After uncrating, the individual fuel bundles are lifted and transferred between the pallet inspection table and the loading trough by the fuel lifting tool suspended from the air-balance hoist.

The air-balance hoist is mounted on a jib crane of 140 kg (300 lbf) capacity Figure A-7, Item 7). This crane is pivoted from the building wall above the two new fuel transfer mechanisms, at approximately the building center line, and covers the area of the new fuel transfer room through which new fuel bundles have to be moved. The air balancing hoist is free to travel along the jib. It is air powered at a gauge pressure of 827 kPa (150 psi) and can be adjusted to balance the load from a control on the operator's handgrip on the bundle lifting tool.

A.2.4.3 Bundle Lifting Tool

The bundle lifting tool is a manually operated device which clamps around the end plates of the fuel bundles, through lifting adaptors. When the weight of the bundle is on the tool, the tool is clamped securely to the bundle end plates by the toggle action of the tool linkage. The lifting adaptors are mounted on spherical bearings which allow the adaptors to align with the bundle end plates and permit the bundle to be rotated for inspection. The air balancing hoist used with the bundle lifting tool allows the operator to transfer the fuel bundles with a minimum of effort and without damage.

Once the bundle is on the air balance hoist, it is moved onto the inspection table (Figure A-7, Item 5), centrally located between the two new fuel transfer mechanisms (Item 1).

Before placing a bundle in the loading trough of the transfer mechanism, it must be thoroughly inspected and its serial number recorded with respect to its final location in the reactor. Under no circumstances may fuel be put into the reactor if there is any doubt about its physical condition. While the bundle is held in the lifting tool over the inspection table, a check of the bundle diameter and a visual check for cleanliness will be carried out to make sure no foreign material such as the polyethylene wrapping or styrofoam packing is stuck to the bundle.

A.2.4.4 Fuel Spacer Interlocking Gage

The fuel spacer interlocking gage (Figure A-8), is used to check the overall diameter of each fuel bundle before it is placed in the loading trough. Separation among the elements at the fuel bundle mid-length is maintained by three spacers which are brazed to the elements. The spacers are positioned on each individual element such that contact between any two mating elements is spacer-to-spacer. Furthermore, adjacent spacers are skewed in the opposite directions to increase

the effective width of contact among the spacers and to decrease the possibility of their interlocking. The diameter of the bundle indicates whether or not the spacers of the bundle elements are interlocked. The gage is used on the bundle while the bundle remains supported in the lifting tool. It consists of two pivoted segments and a dial gauge, the dial gage having a shaded area which indicates a 'GO/NO GO' range.

A.2.4.5 Loading Trough and Loading Ram

After the bundles are thoroughly inspected, they are placed in the fuel loading trough of one of the transfer mechanisms (Figure A-9). They are identical in construction but mounted in opposite directions, in order to supply new fuel to the FM on both faces of the reactor.

The loading trough and a ram are provided for loading the new fuel into the new fuel transfer mechanism magazine. Two fuel bundles are normally loaded into the trough (Item 10), and after the bundles are loaded, the lid is closed and the bundles are pushed into the magazine (Item 5) by the loading ram. The magazine is indexed to the next channel position and two more bundles are inserted, until the magazine contains the required number of fuel bundles.

The trough is provided with a hinged lid (Item 11) which is interlocked to prevent operation of the ram unless the lid is closed. Limit switches are mounted in the trough and provide an indication to the control system when a fuel bundle is placed in the trough.

The loading ram connects to the transfer mechanism rear cover at the top position, in line with the top magazine station. The ram is an oil/air operated, double-acting cylinder, supplied from the new fuel auxiliaries system. The oil/air system of ram operation is used since it enables better speed control and smoother ram operation. Proximity switches are installed at each end of the cylinder to indicate when the limits of ram travel have been reached.

A.2.4.6 Air Lock Gate Valve

The air lock gate valve (Figure A-9, Item 8 and Figure A-10) is pneumatically operated and is installed between the loading trough and the new fuel transfer mechanism magazine, to seal off the magazine whenever fuel is not being loaded into the magazine. This valve prevents the spread of any contamination from the FM head, the maintenance lock or the reactor vault, into the new fuel room. Limit switches indicate when the valve is at the open and closed positions.

A.2.4.7 New Fuel Transfer Mechanism Magazine

The transfer mechanism magazine assembly (Figure A-9, Items 4-7) consists of a leak tight housing, a rotor, and a drive unit. The magazine housing is a drum-like enclosure with a normally closed drain connection to the active drainage system and a vent to the reactor building vapor recovery system to remove any contamination through purging.

The magazine rotor contains seven tubular channels, six for accommodating the new fuel bundle pairs and one for the new fuel transfer mechanism shield plug. The shield plug, which is normally located in the new fuel port, reduces radiation streaming into the new fuel transfer room from the FM head when passing by the new fuel port of the FM maintenance lock.

The drive unit is shown in Figure A-11. A bevel ring gear is mounted to the rotor assembly, connecting with the bevel drive pinion for a 7:1 gear reduction. A coupling connects the bevel

drive pinion to a 'Ferguson' indexing unit located outside the magazine housing. This 'Ferguson' unit has a 4:1 reducing ratio. It features a special cam mounted on the input shaft meshing with eight roller followers mounted on the output shaft.

The lead on the cam is shaped such that through 90° of input shaft rotation, there is no movement on the output shaft. The spaces between the eight roller followers correspond to the seven magazine stations, thus allowing for accurate magazine positioning without close positioning requirement on the input shaft. A spring-set electrically released brake on the motor minimizes coasting and provides positive positioning.

A.2.4.8 Transfer Ram and Drive

The function of the transfer ram is to push the new fuel bundles from the new fuel transfer mechanism magazine into the FM, and to move the shield plug between the new fuel port and the transfer mechanism magazine. The openings for the transfer ram on the magazine front and rear covers is located at a bottom position, in line with the respective magazine station. The ram head incorporates a latch assembly for engagement with the shield plug (Figures A-12, A-13).

The ram is driven through a continuous duplex chain by a variable speed dc motor through a speed reducer and a torque limiter. The ram tube is supported at the rear on two pillow blocks, fitted with split ball bushings, which run on two roundways. The ram is sealed to the back of the new fuel magazine housing by a floating seal assembly. This contains a wiper and a seal, both mounted in a housing which is free to move radially within the main housing. The ram head is chrome plated and contoured to permit free movement in the magazine channels and in the port.

The ram is normally driven under program control from the digital computer, although manual control from the control console in the main control room is possible. When pushing fuel or a shield plug, the ram is operated at slow speed at the beginning and end of each stroke, and at high speed for the balance of the stroke. During ram retract, the slow speed is only used at the end of the stroke. Controlled acceleration and deceleration and dynamic braking are also provided by the motor controller.

Ram force is limited by a torque limiter mounted between the speed reducer and the chain drive sprocket.

Ram position, for control of ram stopping and speed changing operations, is detected by a shaft encoder driven through a speed reducer connected to the end of the chain drive sprocket shaft.

A.2.4.9 Magazine/Port Adaptor

An adaptor assembly is bolted to the new fuel transfer mechanism front cover, at a bottom position in line with the respective magazine station and the new fuel transfer ram. The adaptor connects the new fuel magazine to the new fuel port and consists of a spool piece with two double acting pneumatic cylinders (Figure A-9, item 7, and Figure A-12). The function of the two cylinders is to lock the new fuel shield plug in position in the new fuel port, and to release the transfer ram from the shield plug after locking, allowing the transfer ram to retract while the shield plug remains in the new fuel port. Whenever the shield plug or new fuel bundles require passage through this area, both pneumatic cylinders must be retracted.

The mechanism to unlatch the shield plug in the transfer mechanism magazine is illustrated in Figure A-13. A ramp bracket built into the magazine tube actuates the latching mechanism and disconnects the shield plug from the ram head.

A.2.4.10 New Fuel Port

Embedded in the walls of the FM maintenance lock are the new fuel ports (Figure A-14). Their centerlines are located 2.4 m (8 ft) above the floor in the maintenance locks and 460 mm (18 in) above the floor in the new fuel transfer room. Again there are two ports for the two FMs servicing the reactor. The port is a tubular connection with an end fitting extending into the maintenance lock and the other end engaging with the new fuel transfer mechanism port adaptor. On loading new fuel into a FM, the new fuel port becomes the passageway for bundle movement from the new fuel transfer mechanism to the FM.

The two ports are offset by 270 mm (10.5 in) relative to each other to join the two new fuel transfer mechanisms, which are offset. Where the new fuel port extends into the FM maintenance lock, a drain connection is located to collect any run-off from the FM magazine during new fuel transfer.

A.2.4.11 Local Control Panel

A local control panel is mounted beside each transfer mechanism. The control panel contains the controls and indicators required for loading the fuel bundles into the magazine and for indicating the magazine load status. A key operated switch permits the selection of ‘AUTO’, ‘MAN’ or ‘REMOTE’ for the loading function. When selected to ‘AUTO’, the normal method of operation, both transferring of the fuel into the magazine and indexing of the magazine are performed automatically through a single manual pushbutton actuation. In the ‘MAN’ mode of operation, the loading ram, air lock valve and the magazine operations are under full manual control through actuation of three-position switches on the panel. The ‘REMOTE’ selection permits operation under abnormal conditions of the ram and air lock valve from the fuel handling control console in the main control room.

A.3 Fueling Machine Head - General

A.3.1 Introduction

The FM (Figures A-15, A-16) is basically a pressure vessel designed to form an extension of the heat transport system to enable refueling operations with the reactor at full power.

A.3.2 Purpose

The purpose of the FMs is to transfer new fuel to the reactor, receive and transfer irradiated fuel from the reactor and to perform the operations necessary for on-power refueling at the reactor face.

A.3.3 System Description

The fuel changing operation is carried out by the FMs. This process requires the FM to interface with the new fuel port, fuel channels, irradiated fuel ports, and the associated plugs and adaptors. The fuel changing operation is shown in Figures A-17 to A-21.

The fuel changing operation begins as one FM traverses to the maintenance lock to receive new fuel. The operation is described by the duty cycle, 'at the new fuel port', as follows:

Step	Operation
1	Home and Lock FM
2	Drain down
3	Remove snout plug and insert guide sleeve
4	Remove port shield plug
5	Insert two bundles into FM and retract new fuel port ram
6	Repeat steps 4 and 5 three times
7	Index new fuel magazine, insert and lock port shield plug and retract ram
8	Remove FM guide sleeve and insert snout plug
9	Unlock FM 'Z' motion out

The FM then traverses to the reactor face and locks onto a fuel channel. The FM at the other side of the reactor also locks onto this channel. The FM then performs various functions to move the new fuel into the channel while the opposite FM receives the irradiated fuel. At both ends of the channel the channel closures and snout plugs must be removed.

The operation of the changing FM is described by the 'on reactor' duty cycle:

Step	Operation
1	Home and Lock FM
2	Pressurize
3	Remove snout plug and store
4	Remove closure plug and store
5	Insert guide sleeve in snout
6	Remove shield plug and store
7	Fuel eight bundles
8	Replace shield plug
9	Remove guide sleeve and store
10	Replace closure plug
11	Replace snout plug
12	Depressurize
13	Unlock FM 'Z' motion out

The FM accepting the irradiated fuel will then traverse to the irradiated fuel port to discharge the irradiated fuel bundles. This operation is described by the duty cycle, 'at irradiated fuel port', as follows:

Step	Operation
1	Home and Lock FM
2	Flood port, remove snout plug and insert guide sleeves
3	Drain down and open port valves
4	Index FM magazine
5	Advance FM ram to load two bundles onto ladle
6	Retract FM ram to clear and retract fuel stop
7	Lower ladle
8	Index rack
9	Raise ladle
10	Repeat steps 4 to 9 three times (includes complete ram retraction after last bundle pair)
11	Close port valves, remove guide sleeve, insert snout plug
12	Unlock FM 'Z, motion out

The process will then continue with the 'accept' FM traversing to the new fuel port in the maintenance lock. The 'accept' FM and 'charging' FM, therefore, perform both fueling functions. Fueling will always be done with the flow in the fuel channel. Alternate fuel channels have opposite coolant flows.

The traverse time of the FMs is lumped into one duty cycle, 'traversing to and from the reactor face':

Step	Operation
1	Traverse from start position to new fuel port
2	Traverse from new fuel port to bridge (average)
3	Raise bridge and position FM at fuel channel (average)
4	Align reactor area bridge with maintenance lock tracks (average)
5	Traverse to irradiated fuel port
6	Traverse from irradiated fuel port to finish position

A.3.4 Equipment Description

The FM is made up of several main assemblies, and also requires additional associated components, supporting structures, and supply and control systems.

The FM is comprised of four major assemblies: the snout assembly, the magazine assembly, the separators and the ram assembly.

The ram adaptor, guide sleeve assembly, snout plug, coolant channel closure, coolant channel shield plug, and the FARE tool are operated and handled by the FM major assemblies. These

components are required to maintain system integrity while not refueling or to allow proper handling of the fuel bundles.

The cradle (Figure A-15) supports the FM, and carries much of the D2O, electrical and oil hydraulic equipment. The cradle also supports the magazine manual drive equipment and the FM counterbalance weights. The FM is secured to the cradle through fittings on the magazine housing, while the ram housing is supported in the cradle on two pairs of rollers which permit differential expansion. To overcome the effects of ram housing whip under seismic loading, restraint straps are located over the ram housing at each support location. These straps also allow for differential expansion.

The equipment required for FM mobility, support, control and power supply include the FM bridge, FM carriage assembly, catenary system, FM D_2O control and FM oil hydraulics. The FM assemblies and associated equipment are described individually, in Sections A.4 to A.18.

A.4 FM Snout

A.4.1 Purpose

i) To achieve on-power fueling, the snout assembly enables the FM to clamp onto any reactor fuel channel end fitting and to seal the connection at high D_2O pressure and high temperature.

ii) To achieve loading of new fuel bundles and the discharging of irradiated fuel bundles from a FM, as well as testing and maintenance, the snout assembly enables the FM to clamp onto the new fuel port, irradiated fuel port, ancillary port, or rehearsal-facility port.

A.4.2 Equipment Description

The snout assembly (Figure A-22) comprises the center support, the clamping mechanisms, the emergency lock assembly, the head antenna and the snout probes. It is designed to prevent D_2O leakage under a high operating pressure and increased temperature during on-power fueling operations.

The pressure tight connection is accomplished by advancing the FM in the ‘Z’ direction until the clamping barrel (Figure A-22, Item 9) is over the end fitting and two of the snout probes (Item 27) are depressed. There are four snout probes that detect the proximity of the seal face to the end fitting, so that proper contact for clamping can be determined. Once the probes are depressed, clamping is initiated by driving wedge segments (Item 6) down behind the end fitting flange. This also serves to press the end fitting face up against metallic seal on the end of the center support (Item 14). A pressure tight connection is achieved when the required clamping force has been reached.

Another important feature of the snout assembly is the antenna which is mounted on the front of the snout and is used to detect any gross position error of the FM when it is advancing in the ‘Z’ direction towards a channel end fitting. If the FM is misaligned with the end fitting, the antenna plate (Item 1) will be depressed. This actuates the antenna switch (Item 3) and the motion of the FM towards the reactor is stopped as a consequence. Also, disengagement of the clamping

mechanism while the magazine is at reactor pressure is prevented by an emergency lock assembly which is activated when the magazine pressure is over 3.79 MPa (550 psi).

The snout plug, which is used to seal the FM, is held in place by jaws engaging the locking groove of the center support. The seal is made by expanding a radial bore seal in the smooth bore of the center support. The center support also acts as a connecting channel between the magazine and the end fitting, and accommodates the guide sleeve during fueling operations.

A.4.2.1 Snout Center Support and Seal

The snout center support (Figure A-23), is a concentric stainless steel forging extending the pressure boundary from the reactor end fitting into the FM magazine. It keys to the magazine front cover and has a smooth inside bore with a locking groove for the snout plug and a keyway for the guide sleeve.

Located on the front face of the snout center support is the static seal that interfaces between the FM snout and the fuel channel end fitting. The static seal is a one-convolution metallic ring. It is held in front of the center support by a seal holder and seal holder ring and is replaced on average every three to six months.

A.4.2.2 Snout Clamping Mechanism

The snout clamping mechanism is actuated oil-hydraulically by four pistons (Figure A-22, Item 23) mounted on either end of the upper and lower racks (Items 21, 22). Two pistons are used for clamping and two for unclamping. Linear rack movement causes a rotary motion in the screw and gear component (Item 16) which in turn moves the clamping barrel (Item 9) in an axial direction. The clamping force generated reacts against the snout center support through a thrust bearing (Item 17) and the lock ring (Item 15), placing the center support section forward of the lock ring under compression during clamping. A second thrust bearing locates the screw and gear components while a spacer and 'Belleville' spring washer (Items 18 and 19) accommodate any additional movement due to thermal expansion in the center support after the clamping action is complete.

The correct rack and gear meshing is ensured by a guide plug (Item 26) for the upper rack and the emergency lock piston housing (Item 28) for the low rack.

Four identical linkage mechanisms are provided to drive four wedge segments (Item 6) into position during clamping.

Each linkage mechanism (Figures A-22 and A-23), is comprised of a wedge segment (Figure A-22, Item 6), a post and screwed link (Item 8), a lever arm with two attached roller bearings (Item 7), a cam block (item 5), and a lever bearing. The lever bearing is rigidly mounted to the clamping barrel with an appropriate cut-out provided in the outer support to allow for movement in the axial direction, as shown in Figure A-23. The cam block is rigidly mounted to the outer support and engages the two roller bearings connected to either side of the lever arm. The slots in the cam block are shaped such that the lever arm is forced down when the clamping barrel (and hence the lever arm) retracts during the clamping operation. With the four wedge segments thus inserted, the clamping force is transmitted axially from the clamping barrel via the wedge segments to the end fitting shoulder, pressing the end fitting against the snout center support.

When the snout is unclamped the wedge segments are retracted. This is necessary, as the end fitting shoulder must pass the wedge segments prior to clamping.

An O' ring seal (Figure A-22, Item 13 and Figure A-23 Detail 'A') is provided to prevent corrosion in the annular space containing the threaded section as well as the main thrust bearing. The O' ring seals against any D_2O which otherwise may enter this area in the event of snout seal leakage. An inter-cavity leak-off is provided from the annular space to give an indication of either oil leakage past the rack pistons or D_2O leakage past the emergency lock piston. Another leak-off is provided from the inter-cavity between two O' rings (Figure A-22, Item 25), to detect any in-leakage from the magazine side.

A.4.2.3 Snout Emergency Lock Assembly

The snout emergency lock assembly safeguards against inadvertent snout unclamping while the snout cavity is pressurized above 3.93 MPa (570 psi). The snout cavity is defined as the area forward of the FM snout plug when installed in the snout. During refueling, both the coolant channel closure and the FM snout plug are removed and the FM becomes an extension of the heat transport system. Inadvertent snout unclamping (resulting in a loss-of-coolant accident) is therefore prevented by mechanically engaging a solid piston (Figure A-22, Item 29) into a recess on the lower rack, thus positively arresting the unclamping motion. The lock piston is engaged by D2O hydraulic pressure through a direct line connecting the snout cavity pressure to the underside of the lock piston. A spring (Item 30) fully returns the lock piston if the snout cavity pressure falls below 3.93 MPa (570 psi). Conversely, if the snout cavity pressure rises above 5.86 MPa (850 psi), the piston is fully engaged. The heat transport system pressure is approximately 10.76 MPa (1500 psi).

A.4.2.4 FM Antenna Assembly

The FM antenna consists of a stainless steel plate (Figure A-22, Item 1) shaped to interfere with the fuel channel end fittings if the position error between the end fitting and FM snout center lines is more than 12 mm (0.475 in) during homing operation. The plate is held in position by four spring assemblies mounted to a support ring (Item 2) which in turn attaches the whole antenna assembly to the snout clamping barrel. Depending on the direction of the position error, one or more of the four antenna switches (Item 3) mounted 90° apart on the support ring will be actuated if the antenna plate is depressed, that is, if misalignment exists beyond the capability of the 'X' and 'Y' correction-systems. The control system then stops further FM head advance and corrective action by the operator becomes necessary.

A.4.2.5 Snout Probes

Four probes (Figure A-22, Item 27) are located 90° apart on the seal face of the snout center support. The probes are actuated by the reactor end fitting during the homing operation to indicate close proximity of the end fitting seal face and hence correct position for snout clamping. Each probe is mounted through a lever bearing to the snout and connects to a linear potentiometer mounted to the outer support. A spring connected in parallel to the potentiometer holds the linkage assembly under tension.

A.5 FM Magazine Assembly

A.5.1 Purpose

The magazine assembly provides a storage facility within the FM head for fuel bundles, channel closures, shield plugs, snout plug, ram adaptor, and guide sleeve and insertion tool.

A.5.2 Equipment Description

The magazine assembly can be divided into three main parts, the magazine housing, the magazine rotor and the rotor drive unit.

A.5.2.1 Magazine Housing Assembly

The magazine housing assembly (Figure A-24) is a pressure vessel designed to operate at a rated pressure of 13.1 MPa (1900 psi) and a temperature of 149°C (300°F). It consists of two forgings; the magazine front cover and the magazine rear housing (Figure A-24, Items 18 and 23) held together by a 75 cm (30 in) clamp and seal ring (Items 21 and 22).

The 75 cm (30 in) clamp consists of two halves made of cast steel and a seal ring made of stainless steel. Each clamp half is designed with an integral lifting lug for convenience in handling. The threaded steel studs holding the clamp halves together are equipped with indicator rods fitted axially through their centers and secured at one end. Proper clamping force is indicated by the extension of the studs in tension relative to the untensioned rods. The steel nuts have spherical ends which seat in spherical seats of the clamp halves. The nuts have extended hexagon outer ends for access of the wrench socket without fouling the hoop or the clamp.

The seal ring provides concentricity between magazine front cover and rear housing while a dowel pin connecting into both contact faces assures correct alignment of the magazine housing and the front cover, so that the ram assembly and top center position of the magazine rotor will be lined up with the snout assembly.

The magazine front cover provides openings and mounting faces for the snout assembly, the separators and the weir, while the magazine rear housing has a smaller clamping hub for attachment of the ram assembly via another 25 cm (10 in) clamp (Item 33) and an extension to house the indexing drive unit. Components inside the magazine housing comprise the magazine rotor with its shaft seal, the D_2O lowering weir which maintains a minimum level of D_2O in the magazine, four D_2O mixing eductors, temperature sensing devices and a flow shield.

The funnel shaped flow shield (Item 28) is fitted into the back end of the magazine housing and is trapped in place between a shoulder in the housing and the spherical bearing housing of the ram assembly. Its function is to minimize thermal shock to the back end of the magazine housing by shielding it from the flow of cooler water entering the magazine housing from the ram housing.

The four mixing eductors (Item 35) are fed from the magazine D_2O supply line. Two eductors are fitted around the center hub near the back and two are fitted inside the rear housing about 400 mm (16 in) further forward.

The inner eductors direct flow clockwise and the outer eductors direct flow counterclockwise. Their purpose is to provide good mixing of the entering water with the water already in the magazine coming from the ram assembly.

The D_2O level control weir (Figure A-24, Item 20 and Figure A-16) is mounted on the inside of the front cover and allows the water level inside the magazine to be lowered below the snout if the drain valve is opened.

There are two or three temperature sensing resistance temperature detectors (RTDs), one on the top of the magazine front cover, one on the top of the magazine housing for some FMs, and another on the back of the magazine housing on the right hand side below the lowered water level.

A.5.2.2 Magazine Rotor Assembly

The magazine rotor consists of a solid rotor shaft and a cylindrical weldment holding 12 magazine tubes. All components are made of stainless steel. The end plates of the weldment are machined to a scalloped shape to form the 12 equally spaced saddles for positioning the magazine tubes. Two lugs on each tube provide for screws and dowels to form the attachment to the scalloped end plates of the weldment. Individual tubes can thus be replaced if they become worn or damaged.

There are five stations for fuel bundles (two bundles per magazine station), two stations for channel closures (one spare), two stations for shield plugs (one spare), one station for the ram adaptor, one station for the guide sleeve and insertion tool and one station for the snout plug. The guide sleeve station is the only one split along its length to provide a guiding key-way for the guide sleeve. The ram adaptor station has a bar welded across its front opening to ensure against entry of fuel bundles.

A.5.2.3 Rotor Shaft and Drive Unit

A.5.2.3.1 Rotor Shaft Support

The rotor shaft support is a stainless steel long neck flanged structure. It holds the rotor shaft in place with one set of single row deep groove radial ball bearings in the front and a triple stack of angular contact ball bearings at the rear. The rotor shaft support is bolted to the magazine rear housing. The bearings are designed to support the mechanical loads and to withstand the hydraulic load. The mechanical loads include the weight of the loaded magazine channel stations and the ram forces. The hydraulic load is generated by the magazine internal pressure.

A.5.2.3.2 Balanced Shaft Seal

The magazine housing has two separate compartments; the magazine enclosure and the Ferguson Drive enclosure. The rotor shaft passes through the wall between the two compartments and the pressure boundary is provided by a balanced shaft seal (Figure A-25). This seal assembly comprises a spring loaded rotor assembly mounted to the magazine rotor shaft and running against a stator which connects to the magazine housing through a gland plate.

A.5.2.3.3 Drive Unit

The rotor shaft section extending into the Ferguson Drive enclosure attaches to a plate of 12 equally spaced roller followers and also connects to a rotary potentiometer (Figure A-25). The roller followers engage an indexing cam. The cam shaft which mounts the indexing cam is installed perpendicular to the rotor shaft and supported by two sets of tapered roller bearings. Both ends of the cam shaft extend from the Ferguson Drive enclosure and are sealed by a pair of oil seals. One side of the cam shaft is attached to a drive gear which engages the worm gear of the oil hydraulic motor in the gearbox. The other side (not shown in Figure A-25) is attached to a rotary potentiometer. The oil hydraulic motor, the gearbox and the rotary potentiometer are mounted outside of the Ferguson Drive enclosure.

Whenever the oil hydraulic motor is energized, it rotates the magazine via the indexing cam and roller followers. For change of one channel station, the roller follower turns 30° while the indexing cam rotates 360° with 90° dwell. Throughout the 90° dwell the magazine station remains aligned.

A.5.2.3.4 Magazine Emergency Drive

The emergency drive gearbox assembly is mounted between the hydraulic drive motor and the worm drive reduction gear assembly, and enables the hydraulic drive motor to be disengaged and a manual drive shaft to be engaged with the worm drive input shaft for manual operation. The manual drive shaft of the emergency drive gearbox is connected through rotary drive shafts and a miter gearbox to a manual drive shaft at the rear of the ram assembly (Figure A-15). The manual drive is locked by a dowel pin engaging a hole in the manual input drive shaft flange. To rotate the manual drive, an upward force on the input drive must be maintained in order to release the flange from the pin.

In normal operation, a sliding coupling sleeve in the emergency drive gearbox (Figure A-26) is held in engagement with the hydraulic drive motor by an eccentric stop on the manual input shaft. When the manual input shaft is rotated 180˚, the eccentric stop releases the sliding coupling sleeve, which through springs, slides along the guide pins to disengage the hydraulic drive motor and engage the manual input shaft with the worm drive reduction gear input shaft. Continued rotation of the manual input shaft from the connection point at the rear end of the ram assembly will then rotate the magazine.

To return the emergency drive gearbox to ‘hydraulic motor operation, the manual input drive shaft is positioned so that the eccentric stop is clear of the sliding coupling sleeve. The sliding coupling sleeve is then repositioned by a squared shaft on the emergency drive gearbox and the manual input drive shaft is rotated 180° to engage the eccentric stop with the sliding coupling sleeve to hold the coupling sleeve engaged with the hydraulic drive motor.

A.5.2.4 Magazine D_2O Level Drain Assembly

The magazine housing is a pressure vessel filled with D_2O. Whenever new fuel bundles are loaded into the magazine, or discharge of irradiated fuel bundles from the magazine is required, the magazine must be depressurized and it’s D_2O level lowered below the snout opening. For this purpose, the magazine has a weir built in the magazine front cover (Figure A-16). In operating a drain valve, the weir retains the magazine D_2O level such that all channel stations

remain submerged except the one indexed to the snout. A drain valve is mounted under the bottom of the magazine front cover and is powered by an oil hydraulic actuator. The actuator stem of the drain valve has a heavy spring, such that when the oil pressure acting on the actuator is equal to (or greater than) the spring force, the valve is closed. The spring will force the valve to open if the oil pressure becomes lower. A linear potentiometer attached to the drain valve stem provides electrical signal feedback to the control system. Whenever the fueling operation requires lowering of the magazine D_2O level, a mechanism termed the D_2O discharge port comes into play.

The D_2O discharge ports, located on the floor of both FM maintenance locks under the new fuel, irradiated fuel, and ancillary calibration ports, provide for:

i) D_2O discharge from the FM magazine to be funneled back to the D_2O recovery system;
ii) drainage of D_2O collection tank mounted on the FM cradle.

The D_2O collection tank contains clean D_2O collected during snout cavity venting, and possible transfer of D_2O from the magazine during partial level lowering while the FM traverses with irradiated fuel from the reactor face.

A.5.2.4.1 D_2O Discharge Port

The D_2O discharge port consists of a mounting block assembly which engages with the drain flange on the FM magazine front cover. The mounting block contains a butterfly valve, flanged to a flexible braided stainless steel 7.62 cm (3 in) diameter hose. This assembly is connected through a four bar linkage to an air actuator.

Energizing the air actuator causes the entire mounting block assembly to be raised, making contact with the FM drain flange, and at the same time opening the butterfly valve on the discharge port through the linkage mechanism. By the same means this valve closes when the air actuator is de-energized.

Air actuators are mounted on each discharge port assembly. At the irradiated fuel and ancillary ports there are two air actuators which operate a butterfly valve on the FM to drain the magazine to weir level after the drain valve is opened, or to drain the collection tank. The run-off is gravity fed into the storage tank and then pumped back to the main D_2O storage facility.

At the new fuel port location, there is a third air actuator, which operates a ball valve which drains the oil and D_2O mix tank. The run-off is discharged into a separate container and then disposed of manually.

All air actuators located at the discharge port assembly are coupled with potentiometers, for positional feed back purposes, and the air actuators are controlled by solenoid-operated directional valves having a separate control panel.

A.6 Separator Assembly

A.6.1 Purpose

The functions of the separator assemblies are:

a) To sense the position of the fuel being fed into or being discharged from the reactor and to provide a signal to the computer to stop the ram at the correct position.

b) To insert a stop device between two adjacent fuel bundles or between the shield plug and the fuel column, and to restrain the motion of the fuel column extending from the stop device into the reactor.
c) To push the bundles that have been separated from the fuel column into the magazine to allow clearance for magazine rotation.
d) To verify the presence of the shield plug and FARE (Flow Assisted Ram Extension) tool as they pass under the separators at various steps during the refueling operation.

A.6.2 Component Description

The separators are components of the FM. The separators can be removed and replaced relatively easily.

For each FM there are two separator assemblies which perform identical functions and operate in synchronism. They penetrate through the magazine end cover at a point just forward of the magazine tubes and each assembly is oriented at 67.5° from the vertical. In order to distinguish between the two assemblies they are referred to as either the 'left hand' or 'right hand', as seen from the rear of the FM. The following descriptions refer to one separator only.

A.6.2.1 Feeler

The feeler, or sensor (Figure A-27, Item 13) acts as a mechanical finger, powered by D_2O pressure, in order to sense the presence of a fuel bundle or shield plug that is under the separator assembly. This mechanism is controlled by a piston ('C' piston, Item 19) through a mechanical linkage and it slides up and down inside the pusher (Item 14). The piston in turn has a connection to a rectilinear potentiometer (Item 7) for position monitoring of the feeler, which has three control positions. The feeler can move from the fully retracted, or 'OUT', position to the fully advanced, or 'INSERTED', position (Figure A-28). There is also an intermediate position known as 'FLOATING', in which there is equal D2O pressure on both sides of the piston. In this state, a light spring in the potentiometer assembly exerts a small force down on the feeler to float it on a fuel bundle or shield plug. If there is no such obstacle, then the spring will force the feeler into the 'INSERTED' position. The piston has no seal since this would create enough friction that the feeler might not drop under the force of the spring and gravity. The absence of this seal is not of vital importance since the actuating fluid is D_2O and leakage past the piston will only enter the snout assembly which has a D_2O environment. Grooves are provided on the piston and rod to reduce leakage.

A.6.2.2 Pusher

The main purpose of the pusher is to stop at the correct position for separating fuel, and to assist directly in the fuel separation. The pusher (Item 14) incorporates and acts as a guide for the feeler. When piston 'A' (Item 18), which is connected to the pusher, is activated by D_2O pressure, there is a pivotal movement of the pusher about the forward pin. This tends to move the feeler outwards (PUSH COMPLETE position) a distance which is necessary to move a fuel bundle fully into the magazine so that the magazine can be rotated freely. The forward pin is also attached to the side stops (Item 15) so that movement of the side stops will move this part of the pusher. The rear pin, however, is linked to piston 'A' which requires D_2O pressure to be

actuated. It is this linkage that causes the pusher to push the feeler outward. There are two spring and pin arrangements (Figure A-28) in the side stops that are linked to the pusher by a lug (Item 12). This assists the pusher to return to its neutral position in the event that piston 'A' may be sticking. Piston 'A' utilizes a commercial seal and also a series of grooves on the piston head to provide a water-tight seal. From piston 'A' there is a connection to a potentiometer assembly identical to that of the feeler for position monitoring of the pusher.

A.6.2.3 Side Stops and Safety Latch

The side stops are used to prevent the passage of the fuel string beyond the end of the guide sleeve. They are able to resist the combined load of the hydraulic drag of the fuel bundles in the fuel channel as well as the force of the rams of the upstream FM. The stops are inserted between adjacent bundles by actuation of two hydraulic pistons. These pistons are mechanically linked to the side stops and pinned to provide some pivoting of the stops. This motion is limited by a guide pin (Figure A-28), which extends downward from the side stops and is inserted in a guide bushing, which is a component of the snout center support. This bushing has a large enough bore to allow the pin to move from one side of the bushing to the other and provide limited motion of the stops.

The position of the stops is indicated by signals from magnetic reed switches which are actuated by a magnet and piston rod assembly (Figure A-27, Item 10) connected to the side stop piston 'B' (Item 17).

It is essential that the side stops remain in the position called for, either inserted or retracted. The inserted position must be assured to prevent the fuel string from entering the FM under uncontrolled conditions. The retracted position must be assured to avoid bundle damage since the side stops have sufficient force to cut into a fuel bundle if inserted out of step. The safety latch gives this assurance. This is effected by a latching rod (Item 24), the end of which engages with one of two notches cut in an extension spindle on the other side stop operating piston (Piston 'D', Item 20). The latching rod is held forward to engage either notch by spring pressure and is disengaged by energizing a solenoid. A magnet attached to the latching rod actuates magnetic reed switches (Item 27) so positioned as to indicate the 'LATCHED' or 'UNLATCHED' condition. In case there is a loss of power or the solenoid is defective, then the manual override (Item 5) can be used to unlatch the side stops. This mechanism consists of a T-handle, bellows and shaft. The handle is turned manually to depress a lever and engage a pin that is attached to the latch shaft. This pulls the shaft out from the notch on the side stop piston. The bellows on the override acts as a seal to prevent D_2O from escaping to the atmosphere.

A.7 FM Ram Assembly

A.7.1 Purpose

The ram assembly provides the necessary movements and forces required for transfer and discharge of fuel bundles, or installation and withdrawal of the guide sleeve, the plug, the shield plug and the snout plug.

A.7.2 Equipment Description

The FM ram assembly consists of a 'B' ram, 'latch' ram and 'C' ram. These rams are essentially concentric tube assemblies supported by the ram housing. Each ram has a different ram head assembly to perform the necessary plug or fueling operations. Both the 'B' ram and latch ram are driven by oil hydraulic motors through a gear system and ball screws. The 'C' ram is powered by D_2O from the D_2O supply system. All three rams have rotary potentiometers to provide continuous information of the ram positions to the control system.

The 'B' ram has three speeds and five force levels to perform its operational functions. The latch ram has one speed and one force level while the 'C' ram has five force levels and its speed varies with the force selected.

The ram sub-assemblies are discussed in detail in the following sections.

A.7.2.1 Ram Housing

The ram housing is a pressure vessel consisting of two parts: ram housing and ram rear forging. The housing (Figure A-29) has a 254 mm (10 in) inside diameter and an overall length of about 4 m (158 in). The front end of the ram housing (Figure A-30, Item 19) joins the smaller clamping hub of the magazine housing while the rear end of the ram housing (Figure A-31, Item 9) connects to the ram rear forging via small clamps and seal rings. The gearbox enclosure is bolted to the ram rear forging and is outside of the pressure boundary.

A.7.2.2 Ram Head Assemblies

The ram head assembly is shown in Figure A-32. The stainless steel 'B' ram head (Item 1) screws on to the front end of the 'B' ram tube. Four axial flutes in the outside diameter provide water passages. The chrome plated front end is reduced in diameter to provide a shoulder for pushing, and tapered for entry into the plugs and guide sleeve tool. Twelve balls are staked into the front end for gripping the plugs and guide sleeve tool.

Two cross pins (Item 6) are located between the push ring (Item 4) and the 'B' ram head through clearance openings in the latch tube. This enables 'B' ram force to be applied via the push ring to the deflecting rod.

The stainless steel latch sleeve (Item 2) screws into the front end of the latch tube. Eight latch balls are staked in place about halfway along the sleeves length (Item 10).

The stainless steel 'C' ram head (Item 3) is screwed into the front end of the 'C' ram tube. Six balls are staked into the front end for gripping plug, tool or adaptor stems. The back end of the 'C' ram head is slotted and, when screwed into the 'C' ram tube, a forward projection on the tape anchor plug (Figure A-29) enters its back end to prevent any tendency for the forked thread sections to collapse.

A.7.2.3 Ball Screws

There are four ball screws (Figures A-30 and A-31), and two bearing plates with radial ball bearings. A fixed bearing plate at the front of the ram housing (Figure A-30, Item 16) supports the four ball screw front ends (Items 22, 23). A stack of bearings in the ram rear forging supports the four ball screw rear ends.

The 'B' ram has two ball screws on a vertical plane, and the latch ram has the other two ball screws on a horizontal plane. A trunnion connection (Figure A-31, Item 13), which transmits an equal load, joins the two ball screws with the 'B' ram. The latch ram has a similar trunnion connection (Item 15). Each ball screw has a hydrostatic seal assembly (Item 22) with low friction and relatively small differences between starting and running torques. A stack of preloaded Belleville Spring Washers on both ends of the 'B' ram ball screws provide the 'B' ram with cushioned over-travel stops. The latch ram has independently adjustable over-travel stops. Forward of the front bearing plate, a spherical bearing (Figure A-30, Item 14) mounted inside a bearing housing supports the 'B' ram tube assembly and also provides an optimum alignment to the ram assembly and magazine housing. An oil lubrication system supplies the bearing oil gallery of each ball screw seal package housing and flows through the bearing into the gearbox. It also supplies the bearings of the 'B' ram and the latch ram worm gear shafts.

The facilities for oil seals and drain connection in the lubricating path prevent oil leak, or overflow.

A.7.3 'B' Ram

A.7.3.1 'B' Ram Drive Unit

The drive unit of the 'B' ram includes an oil hydraulic motor, a gear system and two ball screws. The motor is mounted outside the gearbox and is powered by the FM oil hydraulic system. Figure A-33 shows the 'B' ram gear system in the gearbox enclosure and is constantly bathed.

A.7.3.2 'B' Ram Manual Drive

The 'B' ram manual drive has two steps to move the 'B' ram manually as described below and in Figure A-34.

i) Disconnecting the worm gear shaft with the motor coupling.

   In front of the 'B' ram oil hydraulic motor, there is a 'B' ram coupling which connects the motor shaft to the worm gear shaft. A coupling - disconnecting unit is contained in a shaft housing and mounted perpendicular to the worm gear shaft. An eccentric cam follower connects to the sleeve coupling of the 'B' ram worm shaft. Should the 'B' ram oil hydraulic motor become disabled, a special tool would be used to engage and turn the manual coupling positioner which would disengage the worm gear shaft from the motor and allow for manual driving.

ii) Manual Drive Assembly

   The 'B' ram manual drive, which is housed in a guide funnel, is installed parallel to the coupling - disconnecting unit. It has an input drive shaft and a helical gear. The drive shaft with one end exposed in air is held by a threaded shaft, thrust bearings and ball bearings. Normally, the helical gear is pushed into a position by a compression spring such that it would not be able to engage the helical gear on the 'B' ram worm shaft. Once the coupling sleeve is disengaged from the worm shaft, a special tool is used to engage the 'B' ram manual drive shaft that forces the helical gear on the manual drive shaft to mesh with a helical gear on the 'B' ram worm shaft by compressing the compression spring. The torque produced by the special tool is

transmitted to the 'B' ram tube via the manual drive shaft, helical gears, 'B' ram worm shaft, sleeve gear pinions and 'B' ram ball screws.

The special tool can be turned in either the clockwise, or counterclockwise directions. This will drive the 'B' ram to advance, or retract.

A.7.3.3 'B' Ram Potentiometer Assembly

The 'B' ram potentiometer assembly is fixed in a cylindrical potentiometer cover, which is closed and bolted to the gearbox front cover with a mounting plate. In the potentiometer cover, there are four wire-wound potentiometers mounted in the upper space, and a counter mounted in the lower portion. The four potentiometers are divided into two sets. One is the main set; the other is the standby. Each set can provide a course and fine reading. They are driven by the 'B' ram worm gear shaft through speed reducers, gears, and a bellows coupling. On the bottom surface of the potentiometer cover, there is a magnifying lens that the operator can look through to read the counter. The counter is driven by the 'B' ram worm shaft via speed reducers, a series of gearing, and a bellows coupling. This facility is used primarily for calibration when the FM head is accessible.

A.7.4 Latch Ram

Latch ram is second to the outer tube in the three ram assemblies. It normally moves while the 'B' ram is moving, but can move independently, and extends 38.2 mm (1.5 in) more than the 'B' ram tube for plug latching. It consists of a latch head and tube, two ball screw assemblies, hydrostatic seals, a drive unit, and a potentiometer assembly for position feedback.

A.7.4.1 Latch Ram Drive

The latch ram drive motor is mounted outside the gearbox and is powered by the FM oil hydraulic system. The gear system is contained in the gearbox enclosure and is constantly bathed in oil (Figure A-33).

The latch ram manual drive has a similar construction to that on the 'B' ram manual drive. It is used only in an emergency for positioning of the latch ram.

A.7.4.2 Latch Ram Potentiometer Assembly

The construction and arrangement of the latch ram potentiometer assembly is similar to that on the 'B' ram potentiometer assembly.

The latch ram potentiometer continuously feeds electrical signals to both the digital computer and the control console, to control the motion of the latch ram, and monitors the position of the latch ram for the operating personnel.

A.7.5 Motivation Of 'B' Ram and Latch Ram

A.7.5.1 Combined 'B' Ram and Latch Ram Motion

The arrangement of the gear box planetary gearing system gives the latch ram drive a superimposition and synchronization on the 'B' ram drive.

Whenever the 'B' ram oil hydraulic motor is energized, it rotates the sleeve gear (Figure A-33, Item 30) around the gear box main shaft. Since the main shaft is fixed to the gear box, the power from the 'B' ram worm gear will transmit to both 'B' ram pinions and latch center gear (Item 37) through the sleeve gear. The torque to the 'B' ram pinions then turns the two 'B' ram ball screws to move the 'B' ram to advance or retract.

If the latch ram oil hydraulic motor is not energized, the torque transmitted to the latch center gear from the 'B' ram oil hydraulic motor via the sleeve gear will turn the two latch ram ball screws through the three sets of side-by-side pinions (Item 38), the double center gear (Item 42), and the two latch pinions (not shown).

A.7.5.2 Latch Ram Motion with 'B' Ram Stationary

Whenever the latch ram oil hydraulic motor is energized, it rotates the internal gear around the gear box main shaft. Since the main shaft is fixed in the gear box, the power from the latch ram worm gear will transmit only to the two latch ram ball screws through the internal gear, the three sets of side-by-side pinions, the double center gear and the two latch pinions. Because the oil hydraulic control system locks the 'B' ram motor, the sleeve gear and the latch center gear thus have no relative movement with respect to the gear box main shaft. So the three rear side-by-side pinions only spin on the latch center gear. The latch ram then moves alone with 'B' ram at a stationary position. The two pairs of the 'B' ram potentiometers will indicate to the control console where the 'B' ram is locked. Because the latch ram can move forward another 33 mm (1.3 in) to 38.2 mm (1.5 in) more than the locked 'B' ram position, the latch ram potentiometers will provide the control console with additional information about the latch ram moved position.

A.7.6 'C' Ram

The 'C' ram arrangement (Figure A-35) is powered by the FM D_2O system. It is formed by one 'C' ram tube and three telescopic tubes (tubes No. 1, No. 2, and No. 3). These tubes are concentrically fitted in the latch ram tube. The 'C' ram tube and tube No. 3 are moveable and are the longest tubes. Tube No. 1 and No. 2 are stationary and are the shortest tubes. The front ends of tube No. 1 and No. 2 are attached to the tube No. 2 piston. The piston, with piston rings, seals against the tube No. 3 bore and supports the front ends of tube No. 1 and No. 2. The rear ends of tube No. 1 and No. 2 are fixed to the ram rear forging and sealed.

The front of 'C' ram tube and tube No. 3 are attached and sealed by a tape anchor assembly. The rear end of tube No. 3 is screwed to the latch ram trunnion and the annulus between tube No. 3 and the latch ram tube becomes the 'C' ram hydraulic cylinder. The latch ram trunnion mounting forms the rear head for the 'C' ram hydraulic cylinder. When the latch ram moves forward, the 'C' ram hydraulic cylinder moves with it.

The rear end of the 'C' ram tube is screwed to a 'C' ram piston assembly. The piston moves in the annulus between latch ram and tube No. 3 so that when the 'B' ram reaches its extreme forward position, it will provide the FM an additional ram length.

The 'C' ram has a 127 mm (5 in) overtravel before its piston hits the latch ram trunnion stop. The Belleveille washers of the 'C' ram piston act as a cushion. This arrangement balances the dimensional changes due to temperature change in the different tubes when they lock onto a plug

and move it from the hot D_2O environment of an end fitting to the relatively cooler environment of the FM magazine.

A.7.6.1 'C' Ram Drive

Since the 'C' ram is powered by the FM D_2O system, it will not stop at any preset position and stops only when it hits an object. The traveling position of the 'C' ram is indicated by a tape drive assembly. The 'C' ram, with a ram adaptor, is used to push the fuel bundles to their final position in the reactor.

When 'C' ram advances, D_2O enters the annular space between tubes No. 1 and No. 2 through a drilled passage in the ram rear forging. It flows forward in this annulus to the back of No. 2 tube piston where it passes through holes to the annular space between tubes No. 2 and No. 3. It then flows backward in this annulus to holes near the back end of No. 3 tube where it enters the back space of 'C' ram piston. The D_2O pressure, therefore, exerts on the 'C' ram piston and pushes the 'C' ram forward.

When 'C' ram retracts, D_2O enters tube No. 1 inside space through a drilled passage in the ram rear forging. It flows forward to the front end of tube No. 1 through the opening of No. 2 tube piston and enters the front part of tube No. 3. Passing holes in the front part of tube No. 3, D_2O then flows into the annulus between No. 3 tube and 'C' ram tube. It then flows backwards in this annulus to holes near the back end of 'C' tube where it enters the front space of 'C' ram piston. The D_2O pressure, therefore, exerts on the 'C' ram piston and pushes the 'C' ram backwards.

A.7.6.2 Tape Anchor Assembly

A tape anchor pin joins the tape, the tape anchor and the tape anchor weight together. The tape which passes through tube No. 3 support is kept in a horizontal position. The tape anchor is sealed in a tape anchor plug. The plug is held by a retaining ring in the rear of 'C' ram head. The function of the tape anchor assembly is to prevent twisting of the tape if the 'C' ram turns when it moves.

A.7.6.3 Tape Drive Assembly

The tape drive assembly (Figure A-36) is housed in a blank cylindrical pressure vessel which is mounted at the rear end of the ram rear forging. The pressure rating of the vessel is 16.13 MPa (2340 psi) at 148.8°C (300°F) but the normal temperature will not be higher than 79°C (175°F). The assembly consists of tape, pulley, spring motor gears, drive shaft and four wire-wound potentiometers. The tape drive housing has a drive housing cover and a potentiometer cover. The tape drive housing is pressurized by FM D_2O supply system. The potentiometer cover is bolted to the drive housing and contains air at atmospheric pressure. The drive shaft passes through the drive housing cover where it is supported and sealed.

The tape front end attaches to the tape anchor assembly which seals the 'C' ram front end and its rear end winds around the tape driven pulley. When the 'C' ram advances, it pulls the tape forward. This not only gives a torque to the pulley to rotate the drive shaft, but also winds the spring motor to provide a tension in the tape itself. Once the drive shaft is turning, it turns the potentiometers through a set of gears. These potentiometers will give a continuous indication of

the ‘C’ ram position providing electrical feedback signals to the digital computer and the control console.

A.7.7 Ram Positioning

To achieve the sequences of various operations, such as pick-up of shield plug, installation of guide sleeve, etc., the computer controls the ‘B’ ram positioning by a positioning loop program. This enables the ‘B’ ram and latch ram to go to the preset position to accomplish the assigned job.

The ‘C’ ram cannot be positioned like the ‘B’ ram or latch ram, but its feedbacks are checked against a set point for positioning accuracy. Unlike the ‘B’ ram operation, the ‘C’ ram can only be advancing, or retracting, to stall against an obstruction. Using a ram adaptor, the ‘C’ ram pushes the fuel bundles into the fuel channel upstream, or maintains a pressure against the fuel bundle column from the fuel channel downstream. The ‘C’ ram is also used to discharge the irradiated fuel bundles from the FM magazine onto the irradiated fuel elevator ladle via the irradiated fuel port.

A.8 FM Ram Adaptor

A.8.1 Purpose

The ram adaptor provides:

i) a suitable face for contacting the end plate of a fuel bundle.
ii) It centralizes the ‘C’ ram, minimizing sagging of the ram during operation in a fuel channel.
iii) provides a buffer zone, absorbing neutrons emitted by irradiated fuel bundles, consequently preventing both fuel bundles and ram head from overheating.

A.8.2 Component Description

The ram adaptor consists of five parts. The ram adaptor body (Figure A-37, Item 1) provides the contact face with the fuel. The face is machined to simulate a fuel bundle, so that the gap between the ram adaptor and a fuel bundle is identical to the gap between two fuel bundles. Holes in the adaptor body provide for a through flow of D_2O through the ram adaptor. Contained within the adaptor body is the adaptor sleeve (Item 2) which is preloaded towards the FM end by an inner and outer spring (Items 4, 5). The stem (Item 3) which is machined from a solid piece and is centrally connected to the adaptor body, provides a shoulder for the adaptor sleeve and engages the FM ‘C’ ram.

A.8.3 Operating Principles

A.8.3.1 Pick-up From Magazine Station

The steps involved are illustrated in Figure A-37. After the correct magazine station has been selected, the FM ‘B’ ram head is advanced such that the ram deflector rod contacts the stem of the adaptor located in the magazine station (View 1). The ‘C’ ram is then advanced which causes the balls in the ‘C’ ram head to ride up the incline of the stem. The protruding balls come

in contact with the adaptor sleeve, causing the sleeve to move forward against the springs (View 2). Further 'C' ram advance motion causes the 'C' ram balls to drop behind the stem major diameter. The adaptor sleeve is now free to move back under the force of the springs and in so doing entraps the 'C' ram balls. Thus the 'C' ram is locked with the ram adaptor (View 3). Retraction of the 'C' ram will overcome the spring force of a small plunger (built into the magazine station to hold the ram adaptor in its storage position) and will cause the ram adaptor to stall out against the front face of the 'B' ram head. With continued ram 'C' retract motion, the ram adaptor thus becomes an extension of the ram head, suitable to contact and push the fuel string.

A.8.3.2 Deposition in Magazine Station

With the correct magazine station selected and the adaptor on the ram head locked to the 'C' ram, which is selected for retract, the 'B' ram is advanced until it stalls out against the locating bar in the magazine station (View 4). The latch ram then is advanced which pushes the adaptor sleeve back against the spring (View 5). Once the larger sleeve inside diameter reaches the plane of the 'C' ram balls, the 'C' ram balls become unlocked and ram 'C' is free to retract to its home position (View 6). The ram adaptor is now disconnected from the ram head and secured in its magazine storage position.

A.9 FM Guide Sleeve Assembly

A.9.1 Purpose

The channel closure seal face in each channel end fitting forms a step in the channel, the bore of the channel being smaller than the bore of the end fitting. This discontinuity forms an obstruction to the smooth passage of fuel bundles and the shield plugs through this region. A guide sleeve is stored in the magazine and is moved partially into the end fitting, when the channel closure is removed to provide a smooth bore for the passage of fuel bundles and shield plugs between the magazine and the fuel channel.

The guide sleeve is moved between the magazine and the FM snout by the FM rams using a guide sleeve insertion tool. The guide sleeve and the insertion tool are locked together except when the guide sleeve is in position in the snout and end fitting. When not in use, they are stored together in the magazine and are held there by means of a locating tube and a spacer located in the magazine tube. The guide sleeve and tool can only be installed in or removed from the head by disconnecting and removing the ram assembly from the magazine housing.

A.9.2 Component Description

The guide sleeve assembly is purely mechanical and there is no process system or instrumentation associated with it. Figure A-38, upper view, shows the guide sleeve assembly in its FM magazine storage condition while the lower view shows a cross-section of the guide sleeve tool insertion only.

A.9.2.1 Guide Sleeve

The sleeve is about 660 mm (26 in) long, with an inner diameter equal to the fuel channel diameter of 104.0 mm (4.094 in), and an outer diameter equal to the channel closure diameter.

The rear section of the sleeve (Figure A-39) has three outer keys, two of which are mounted rigidly to the sleeve body. The third key is part of a rotatable ring segment, called the 'latch ring', and is located between the two fixed keys. It is this latch ring that provides the locking function of guide sleeve to FM snout and guide sleeve to the insertion tool respectively.

Internally, the rear section of the sleeve has three similar keyways, two fixed, in line with the latch tang, and the third on the inside diameter of the latch ring between the two keyways. A second set of three keyways is located 120° from the main set to mate with the corresponding key arrangement on the insertion tool.

When the outer keys are 30° out of line, the guide sleeve is located in the FM snout. When the outside keys are out of line by 30°, the inside keyways are in line. At this condition, and only at this condition, the insertion tool can be withdrawn from the guide sleeve as it features a similar key arrangement, that is, two fixed outer keys and a rotable center key. The spring-loaded latch tang adjacent to the latch ring locks the ring in place when the keys are out of line by 30°, that is, when the guide sleeve is located in the FM snout. The entry of the guide sleeve tool into the sleeve depresses the latch tang and thus allows rotation of the latch ring. The front stationary key on the insertion tool releases the latch tang.

The keyway configuration in the FM snout center support engages the guide sleeve keys. The guide sleeve cannot rotate because its two fixed keys are located in the keyway, and the key on the latch ring is locked out of line which prohibits any axial movement.

The two cut-outs in the rear end of the guide sleeve provide for access of the FM separator mechanisms to fuel bundles, and other components passing through the sleeve.

Summarizing the important guide sleeve features:

a) Keys on the outside out-of-line by 30° implies keyways on the inside are in-line. In this condition, the guide sleeve is locked in the FM snout and the insertion tool can be withdrawn from the guide sleeve.
b) Keys on the outside in-line implies keyways on the inside are out-of-line. In this condition, the insertion tool is locked into the guide sleeve and the guide sleeve can be withdrawn from the FM snout.
c) There is also an arrangement where the latch ring has rotated only 15° instead of 30° (Figures A-39 and A-40). In this condition, neither keys nor keyways are aligned and the guide sleeve and insertion tool remain locked together. This partial stroke is required when transferring the guide sleeve to and from the FM magazine and is possible in one specific location in the FM magazine only.

A.9.2.2 Guide Sleeve Insertion Tool

The guide sleeve insertion tool is shown cross-sectioned in Figure A-38, lower view. The front half of the tool up to the shoulder engages into the rear of the guide sleeve, while the larger diameter rear section fits into the magazine locating tube and also engages with the FM ram 'B' head.

The tool's function is to translate the linear motion of the FM latch ram into a rotary motion required to manipulate the guide sleeve latch ring while also serving as an adaptor between ram head and guide sleeve. The translation of motion is effected by the ball spline assembly, which

consists of two outer races and an inner race. When assembled, one of the outer races is fixed to the tool body and the other is mounted on two bearings so that it can rotate.

The ball spline inner race (Figure A-38) has two sections, a straight spline section, and a helical spline (or screw) section. This translates to axial motion on the inner race in order to obtain the 30° rotation required on the helical spline outer race for guide sleeve operation.

The ball spline straight outer race is keyed to the tool body and is positioned on the straight spline section of the common inner race. This outer race allows for axial motion of the common inner race, but does not allow it to rotate.

The ball spline helical outer race is mounted on bearings and positioned on the helical spline section of the common inner race. Therefore, when the common inner race is pushed in, the helical outer race will rotate.

The helical outer race incorporates locking ears which extend through cutouts in the tool body to form part of the key arrangement on the outside of the guide sleeve tool. Rotational positioning of the helical outer race with its locking ears is a function of the FM latch ram movement. The locking ears on the insertion tool, in turn, position the guide sleeve latch ring, thereby controlling the alignment of the guide sleeve outer keys.

There are three keys on the insertion tool: two are mounted rigidly to the tool body while the third one is the locking ear which is part of the helical outer race. This key arrangement is duplicated on the guide sleeve tool to obtain a better torque transmission from the tool to the sleeve. The lower view shows the two locking ears while for clarity only one set of the fixed keys is shown.

A circumferential groove is provided in the end of the tool body for latching of the FM ‘B’ ram balls. The FM latch ram head contacts a spring-loaded push ring which is rigidly connected to the inner race. The inner race is pushed in when the latch ram advances, and is spring-returned on retracting the latch ram. In addition to the springs behind the push-ring, there is another spring in the front of the tool which is relied on to assist in pushing back the inner race. The inner race has a hole through its center through which a rod passes. One end of the rod is the ‘C’ ram shaft end while the other end reacts against the spring arrangement. The rod and stem end have no direct involvement in the operation of the tool. They merely safeguard against inadvertent tool actuation by the FM ‘C’ ram. If the ‘C’ ram were to advance accidentally, it would contact the ‘C’ ram shaft end and depress the front spring until the slide bottomed out against the front cover. No actuation of the inner race would occur as the clearance in the front spring arrangement is less than the clearance between the shaft end and the ball spline inner race.

The insertion tool is kept aligned angularly in the FM magazine guide sleeve station by a key mounted on the tool’s outside diameter. Longitudinal cut-outs on either side of the key allow for clearance with two small lugs that protrude into the inside diameter of the locating tube. These lugs engage the tool’s moveable keys and locate it axially in its magazine storage position.

A.9.2.3 Locating Tube and Spacer

The locating tube and spacer tube are located against a shoulder in the FM magazine guide sleeve station. They are held in place axially by a retaining ring while a key on each tube ensures correct radial position.

On removing the retaining ring, the whole assembly can be pulled from the FM magazine, once access has been provided by removing the FM ram assembly.

The latch ring key prevents any axial motion of the guide sleeve so that it cannot be advanced from the magazine storage position until the latch ring key has been rotated through 15° to navigate around the lug in the locating tube. The 15° rotation, however, is not enough to release the guide sleeve from the insertion tool. This allows the insertion tool to lock the guide sleeve securely in the magazine locating tube, while itself remaining locked to the guide sleeve.

A.10 FM Snout Plug

A.10.1 Purpose

The snout plug is used to seal the snout of the FM head when the FM is off the reactor. The interior of the FM head can then be maintained full of water at controlled temperature and pressure, as required, to maintain cooling of the spent fuel while in transit from the reactor fuel channel to the irradiated fuel port.

The snout plug also serves as an isolation device for leak testing the channel closure seal prior to unclamping the FM from the reactor end fitting after refueling, and for leak testing the FM snout seal prior to opening the channel.

As a side benefit during maintenance, the snout plug prevents the spread of contamination, such as tritium and air-borne particulates, and provides shielding against direct radiation from the FM magazine. Contamination will usually be present in the magazine since it has contact with irradiated fuel.

A.10.2 Component Description

The FM snout plug (Figure A-41) is composed basically of two parts, the latching mechanism and the seal assembly. Operation is shown in Figure A-42.

The latching mechanism, which makes up the rear half of the plug, has four jaws which are extended by a spider mechanism. These four jaws locate the plug in a groove in the FM snout center support.

The spider movement is achieved by the FM latch ram head pushing the spider down by means of four latch pins. This is necessary as the FM snout plug operation requires two independent actuations, latching and sealing.

The front end of the snout plug is comprised of the seal assembly, which is screwed onto the latch assembly. The seal assembly contains a large elastomer O' ring seal and the associated mechanism required to expand and retract it.

Expansion of the O' ring, to make a radial seal, is achieved by mounting the O' ring on a fixed diameter and applying an axial squeeze. This causes the O' ring to bulge out and make a seal on the FM center support bore. The axial squeeze is applied by a spring, which activates the links that move the squeeze ring onto the O' ring. Retraction of the O' ring is obtained by pushing the plunger to compress the spring and actuate the links to move back the squeeze ring, unloading the O' ring. The O' ring retracts by freely returning to its natural shape in the retracted condition.

The FM magazine has a tube position suitable for storing the snout plug during channel fueling and fuel transfer operations. When the snout plug is deposited in the magazine, the O' ring is in the compressed and extended condition. A relief diameter in the FM magazine bore is provided to prevent permanent setting of the O' ring and subsequent reduction in seal effectiveness.

A.11 Coolant Channel Closure

A.11.1 Purpose

The purpose of the channel closures is to reliably seal the ends of the coolant assemblies in order to prevent the escape of heavy water from the end fittings, under all modes of reactor operation. There are 380 coolant channel assemblies in a CANDU 6 reactor, with a closure at each end, for a total of 760 channel closures. Thus, even small leaks would result in high demands on the D_2O collection and upgrading systems.

The normal operating conditions of the primary heat transport system against which the channel closures seal are 11.24 MPa (1630 psig) and 266°C (511°F) at the flow inlet end fittings, and 10.34 MPa (1500 psig) and 310°C (590°F) at the flow outlet end fittings. The design objective is to limit the leakage from the closures under these conditions to a maximum of 10 g (0.35 oz) of heavy water per day per closure. Actual long term leak rates have been found, typically, to be in the range of zero to 1 g (0.035 oz) per day per channel closure.

A.11.2 Component Description

A.11.2.1 Closure Locking Mechanism

The basic element of the closure design is a flexible metallic seal disc (Figure A-43, Item 12), which makes a face seal against a shrunk-in ring in the end fitting. The seal disc is supported and retained by the body of the closure, which is held in position by jaws (Item 6) engaging a groove in the end fitting.

During fuel changing, it is necessary to withdraw these closures. This is accomplished by the FM which connects onto the end fittings, removes the closures and stores them in the magazines. Following the refueling, the closures are reinstalled in the end fittings prior to unclamping the FMs.

The locking mechanism in the channel closure is referred to as a toggle-jaw mechanism to differentiate it from the type of mechanism used in the shield plug. In the channel closure, the jaws (Item 6) are moved by toggles (Item 7), which are fastened to a spider (Item 13) and stem (Item 14). When the mechanism is locked in an end fitting, the toggles do not play any part; the jaws are actually wedged against the end fitting by the taper on the spider. To assist in the extension of the jaws, and to keep them extended while the channel closure is in the FM magazine, the spider is spring-loaded against the front housing (Item 1) by four helical springs (Item 3).

To facilitate the manufacture of this closure, the housing is made in two pieces; the front housing (Item 1) and the rear housing (Item 2). These two housings are held together by four cap screws (Item 8), which are installed from the rear in such a way that it is possible to dismantle the channel closure, if it ever became jammed in an end fitting.

The seal disc (Item 12) is retained in position on the front of the closure by means of a loosely fitted seal disc pin (Item 9). The pin is, in turn, kept in place by one of the four cap screws. The raised annular ridge on the front housing, where it contacts the back of the seal disc, is called, the rocker seat.

A.11.2.2 Safety Mechanism

Independent safety mechanisms prevent one of the FM rams, operating inadvertently, to unlatch one of these closures. Each of these safety devices consists of a bar spring (Item 10), located in the spider, and a safety latch (Item 11), attached to the other end of the bar spring. If the hydraulic 'C' ram of the FM was to advance by itself and hit the channel closure, the safety latches would be jammed axially between the stem end (Item 5) and the inner sleeve of the rear housing. This would prevent complete movement of the spider and stem assembly into the closure, and would prevent the withdrawal of the jaws from the end fitting. In normal operation, the FM latch ram is used to unlatch the safety latches, after all three rams are in their correct position. If the 'B' ram advances with the latch ram in the 'unlatching' position, the protruding 'B' ram balls would prevent it entering the channel closure housing.

A.11.2.3 Seal Disc

The seal disc is installed in the following manner:

The seal disc is deflected by the 'B' ram at both the center, through the plunger (Item 4), and the rocker seat on the front housing. The plunger has a 0.89 mm (0.035 in) offset to provide a greater disc deflection at the center. As the jaws are wedged into the end fitting groove, the reaction of this force on the front housing rocker seat provides additional force on the disc.

A.12 Coolant Channel Shield Plug

A.12.1 Purpose

The shield plug serves two main functions:

a) it provides a radiation shield at both ends of the fuel channel,
b) it provides the means of locating the fuel bundles in the fuel channel.

A.12.2 Component Description

The shield plug consists of three basic parts. The fuel adaptor and flow tube (Figure A-44, Items 14 and 13) provide a suitable contact face for the fuel column and facilitate free channel coolant flow. The center section of the shield plug is a solid stainless steel body (Item 11) which serves as a radiation shield. The outer end of the shield plug is the latch mechanism (Item 10), which serves to hold the shield plug in place in the end fitting liner tube.

The shield plug rests on two wear rings. One is machined from the latch assembly casing, and the other is a separate wear ring (Item 12) press-fitted onto the shield body.

The fuel adaptor is press-fitted onto the flow tube and spot welded in two places. The flow tube, in turn, is a press-fit on to the end of the shield body and is locked in place by means of a groove

pin (Item 15) inserted on assembly. At the other end of the body, the latch mechanism casing is a press-fit onto the body, and, in addition, is locked in place by two tangential roll pins (Item 9).

The latch mechanism consists of a spider and jaw assembly housed in a casing (Item 1) in which the spider stem assembly can move back and forth. As the spider (Item 6) is moved axially, the eight jaws (Item 4) move radially, riding on the angled fingers of the spider. Four spider springs (Item 8) situated between the spider and body of the shield plug, maintain the spider in the position at which the jaws are extended. The stem end (Item 2) is fastened to the outer end of the spider stem (Item 3), onto which the FM 'C' ram can be locked. Advancing the FM ram into the assembly will overcome the spring force on the spider and retract the jaws.

In addition to the basic mechanism described so far, there is a safety mechanism to prevent the jaws being withdrawn if an accidental axial force is put on the stem end. This might happen if the 'C' ram of the FM were to advance uncontrolled. This safety mechanism consists of a safety latch (Item 5) and a safety spring (Item 7). When the shield plug is stored in the magazine, or is properly installed in the end fitting, the safety latch has its major diameter underneath the jaws of the shield plug. If an accidental axial force is applied to the stem end, the jaws can only move inwards about 0.5 mm (0.02 in.) before they jam up on the major diameter of the safety latch sleeve. This prevents the removal of the shield plug from the magazine or from the end fitting except when the entire FM ram head assembly is in the proper position to do so.

The FM cannot release the shield plug at a position where the jaws will not extend into a groove, since the FM ram head is provided with mechanically interlocking balls to prevent the release of the shield plug in any position other than where the jaws are fully extended.

It is dimensionally possible for the shield plug to enter the reactor core, but the 'B' ram stroke is physically restricted to safeguards against this. Provision has been made to ensure that the coolant channel flow is not entirely blocked should the ram stroke limit be reached. Two possibilities of blockage could exist if the shield plug detached from the ram head and went down the channel. The first case is when the shield plug is in the main coolant channel, in which case it would obstruct flow in the axial direction. The second case is when the shield plug body or the casing is situated directly underneath the flow holes in the fuel channel liner tube. In this case it would obstruct flow in or out of the channel.

The first flow blockage problem was solved by providing a series of holes through the latch mechanism past the rear wear ring, then reducing the outside diameter of the solid shield plug body, and providing a series of holes past the second wear ring, to permit at least 33% of the normal flow to pass the shield plug. The second flow blockage problem was partially solved in solving the first. Since the outside diameter of the body is reduced, there is no longer any problem of the shield body blocking the flow holes in the liner tube. In the situation where the shield plug latch mechanism casing is opposite the flow holes in the liner tube, there is not quite enough flow area, so two additional rows of eight holes were drilled through the casing on either side of the jaw holes. With these two sets of holes and the clearance around the outside of the casing, there is sufficient room to prevent any significant blockage of flow should the casing come into a position in front of the flow holes in the linear tube. It must be emphasized, however, that this occurrence would be extremely unusual. The FM 'B' ram, cannot move the shield plug any further forward than about 50 mm (2 in) from the nominal installed position, since the ram then reaches its forward mechanical stop. In addition, there are checks by the FM

separators, every time a shield plug is removed, to ensure that there actually is a complete shield plug there.

A.13 Flow Assist Ram Extension (FARE) Tool

A.13.1 Introduction

During fueling operations with the coolant flow, additional force must be applied to the upstream end of the fuel string to move it (and bundles in the discharge machine) downstream when the coolant flow drag on the fuel is insufficient to move the string on its own. This force can be produced either by the 'C' ram of the upstream machine or by a restrictive element in the channel which develops the necessary coolant-flow drag force without the use of the FM ram. This drag force is created by the FARE tool.

The FARE tool is used in place of the upstream FM ram so that the latter does not enter the core and become activated and contribute to the dose rate of maintenance personnel working on the machine. The FARE tool (which also becomes activated when it passes into the core) is discharged from the FM in the same manner as irradiated fuel bundles before maintenance work is started.

The FARE tool concept was developed and used first in Picketing reactors in channels with coolant flows ranging from 21.5 kg/s (1.47 slug/s) down to the core minimum of 15 kg/s (1.03 slug/s). These tools have a fixed geometry and develop a drag force proportional to the square of the coolant flow rate. The range of coolant flow rates in Pickering reactors is small enough that the force developed at both extremes is satisfactory. In the case of the CANDU 6 reactors, however, because of the lower coolant flows in the outermost channels, the range of flows from 21.5 kg/s (1.47 slug/s) to 9.5 kg/s (0.651 slug/s) is too large for use of a single fixed geometry FARE tool. The alternatives were to provide a number of fixed geometry tools, each with a specific range of operation, or a single variable geometry tool which would cover the entire range of coolant flows. The latter was chosen for design of the CANDU 6 FARE tool to avoid the hazard of misuse and for economy. The CANDU 6 FARE tool permits the usual number of fuel bundles (eight) to be changed in one channel visit.

A.13.2 Description

The FARE tool (Figure A-45) is similar to that used in Picketing reactors, except that the ring orifice instead of being fixed, is spring loaded to move and open flow bypass slots at a predetermined ring orifice pressure drop (tool drag force). The pressure drop across the FARE tool and thereby the drag force on the tool is almost independent of flow for the full range of flows of interest.

The fuel adaptor at the downstream end of the FARE tool supports the end plate of the fuel. It has three concentric rings which bear on the three concentric rings of the 37 element fuel bundle end plate.

The upstream end of the tool is primarily for the interface with 'C' ram. The flow area between the lands which support the tool in the pressure tube is larger than in the Pickering tool in order to decrease the pressure drop and to reduce the amount of vibration that is incited by the flow in

this area of the tool. The plug prevents flow from passing through the bore of the upstream casing.

The tube adaptor section is the major departure from the fixed orifice design of the Pickering tool. Most of the total tool pressure drop is across the tube adaptor section. This section comprises the tube adaptor body ring orifice, spring, spring holder, and four pins. The four bypass slots in the tube adaptor are sufficiently wide that when the ring orifice moves a small amount axially, the total flow area in the tube adaptor section increases significantly.

The spring length supporting the ring orifice is such that full ring orifice travel results in a small increase in the spring force which is balanced by the hydraulic drag across the ring orifice. Therefore, the hydraulic drag (and pressure drop) across the tube adaptor section increases very little for large increases in flow through the bypass slots in the tube adaptor. The ring orifice has circumferential grooves machined into its outside diameter in order to increase its pressure drop. By this means, the annular gap between the pressure tube and ring orifice can be large thereby making the pressure drop less sensitive to pressure tube bore variations.

The zircaloy tube makes the total length of the tool equal to approximately the length of two bundles so that it can be handled conveniently by the fuel handling system. This component is made of zircaloy in order to reduce the neutron capture cross section of the tool to a minimum. The two planes of eight drain holes in the tube section ensure that the pressures inside and outside of this tube section are approximately equal.

A.13.3 Operation

The tool is carried in the FM magazine and is pushed into the channel in the same manner as fuel bundles after the last new bundle is inserted in the channel. The ‘C’ ram pushes the tool and fuel string until the ram adaptor face is just inboard of the coolant inlet and the tool is functioning under the influence of the coolant. Irradiated fuel bundles are discharged from the downstream end of the channel in the normal manner with the tool pushing against the upstream end of the string and following its movement back and forth until the remaining twelve bundles are placed in their normal in-core position. With the string in position, the FARE tool is removed from the channel by the charging (upstream) machine ‘C’ ram which latches onto it in the same manner as to the ram adapter. The tool is withdrawn and stored in the magazine until it is needed again, or until it is discharged to the irradiated fuel bay while the FM is being serviced.

Eight fuel bundles are normally changed during FARE fueling. Normal fueling operations on non-FARE channels also change eight bundles. The main difference between the automatic sequences controlling each fueling mode is the extra steps required for FARE tool insertion and recovery.

As the FARE tool first intercepts the flow from the liner tube holes, the flow will pass over the tool OD and through the drain holes in the zircaloy tube section to pass through the fuel adapter. The channel flow restriction at this condition is insignificant. As the ring orifice passes the liner tube holes, the flow is divided by the ring orifice and with further tool movement the total channel flow passes through the tube adapter section. This is the tool position for the maximum channel flow restriction. At this position the ring orifice will have moved and uncovered the bypass slots for all channel flows. As the tool moves into the core pushing fuel bundles into the

downstream FM, the channel flow will increase and the ring orifice will move to increase the bypass slot flow area.

The movement of the ring orifice will be reversed as the fuel column is pushed upstream by the downstream FM until the FARE tool is pushed out of the channel flow.

In any specific channel, the ring orifice will move slightly to accommodate changes in flow as bundles are removed or added to the channel flow stream, but the ring orifice will assume a gross position depending on the flow in the channel.

A.14 FM Bridge

A.14.1 Purpose

The FM bridge provides the means of supporting the FM and its carriage at the reactor face. It positions the FM to the desired horizontal row of fuel channels, using the coarse 'Y' drive system, and holds this position during subsequent carriage traverse (coarse 'X'), fine homing, locking on and fuel changing procedures.

A.14.2 Component Description

A.14.2.1 Bridge Assembly

Each bridge assembly consists of two fixed columns and a bridge beam, which travels vertically on the columns by means of four ball screws, two on each column (Figure A-46). The bridge beam is fabricated from two hollow L-shaped steel beams, which are interconnected and diagonally braced by a series of rectangular section steel beams. It is supported at each end by two cam followers supported on bearing blocks on the column elevators. The cam followers permit limited axial and horizontal movement between the bridge and the elevators. Each cam follower is seated in a bearing block attached to the elevator. Two of these bearing blocks have oversized grooves to allow for axial movement of the bridge beam at one column, while the other two bearing blocks hold the cam followers rigidly to axially locate the bridge beam to the opposite column. The bridge beam incorporates rails, on which the FM carriage travels horizontally and parallel to the reactor face.

The total vertical travel of the beam is the distance from the maintenance lock port elevation to the uppermost fuel channel plus 76 mm (3 in) overtravel. This is equal to a total travel of 6.66 m (21.9 ft). Solid stops position the bridge in line with the maintenance lock tracks. The arrow side of each bridge beam extends beyond the column, such that, when the beam is in its lowest position, the carriage, FM and catenary are free to pass under the lower end of the column during transfer operations between the maintenance lock and the reactor vault.

The bridge must span approximately 11 m (36 ft) between the two columns. The two bridge assemblies, one at each end of the reactor, are approximately 15 m (50 ft) apart. Each column is a welded T-shape fabrication. Two 76.2 mm (3 in.) diameter roundways on each column guide the elevator. Two stationary ball screws are supported from a head bracket bolted to the top of the column, and are located laterally by two brackets at the bottom.

One column is supported from the floor on a fabricated lower column and restrained near the top and at mid-height by horizontal bracing to the building wall. The opposite column is entirely

supported from the building wall, and terminates at the lower end of the elevator travel. This enables the FM carriage to pass under the column, when transferring from the reactor vault to the maintenance lock. The column support structure terminates above the bottom of the column to leave space for the shielding door to traverse between the column and the building wall. An elevator is mounted on each column to support the bridge beam, and is guided and secured to the two column roundways by eight roundway bearings. The four bearings in contact with each roundway are rigidly mounted while those on the other roundway are spring-mounted to compensate for tolerances in the parallelism of the two roundways.

A.14.2.2 Drive Unit Assembly

Each elevator is supported and moved vertically up and down the column by two ball screw jacks mounted on the elevator and engaged with stationary ball screws on the column. The two ball screw jacks on each elevator are driven by a double-ended, two-speed induction motor through two miter gear boxes. An electrically released, spring-actuated brake is mounted on each ball screw jack and is connected to one end of the ball screw jack worm shaft (inset Figure A-46).

The two elevator drive systems on each bridge are interconnected through two of the miter gear boxes by a drive shaft mounted on the bridge. This allows the bridge to be driven by either motor. A shaft encoder is coupled to the second miter gear box on each elevator to provide position information to the control system. The bridge position is normally sensed by the encoders, but limit switches are provided to stop motion if the normal limits of travel are exceeded. Mechanical stops are also provided.

A.14.2.3 Instrumentation and Control

Motor control is normally performed automatically by the control computer, but it may be controlled manually by switches on the control console. A single MAN/AUTO switch allows manual control of both motors and the four brakes. When in the MAN position, each bridge motor can be controlled independently for UP/STOP/DOWN and FAST/SLOW operation, the UP/DOWN selections automatically releasing the bridge brakes through contacts in the motor starters. Motor control is interlocked by a series of relays in related systems to prevent hazardous operation, and are effective during both manual and automatic operation. An interlock bypass switch, located under a locked cover, permits the interlocks to be overridden.

Four spring-actuated, electrically released brakes are mounted on each bridge, two on each elevator. They are normally controlled from the control computer, but they may be controlled manually from the control console through a MAN RELEASE/ENGAGE switch in conjunction with the AUTO/MAN switch.

The position of each bridge is detected by two shaft encoders, driven from the input shaft of each ball screw jack. A relay is actuated to stop bridge motion, when the encoder outputs are out of synchronization.

Electrical power and control signals are connected to the bridge assembly through two power tracks on one column.

A.15 FM Carriage

A.15.1 Purpose

The carriage supports the FM head in the maintenance lock and at the face of the reactor. It travels along the tracks in the maintenance lock and along the tracks on the bridge in the reactor area, In addition to the coarse 'X' motion (horizontal), the carriage also provides fine 'X' motion, fine 'Y' motion (vertical) and 'Z' motion (direction of reactor axis) and allows a controlled amount of rotation of the head about the horizontal and vertical axes. Coarse 'Y' motion is provided by the bridge that supports the carriage. The carriage also serves as the termination point for the main catenary loop and carries the catenary frames and 'Z' motion hose and cable loop. The clamping mechanisms securely anchor the carriage to the bridge rails when the FM is clamped to a channel end fitting, to ensure that excessive loads are not applied to the end fitting by the FM during a seismic event.

A.15.2 Component Description

The FM carriage (Figures A-47 and A-48), can be divided into a drive unit assembly including four carriage clamping mechanisms, and a gimbal assembly.

A.15.2.1 Drive Unit Assembly

The drive unit assembly consists of three subassemblies, an 'X' drive unit, an idler unit and a fine 'Y' drive unit. The 'X' drive unit and the idler unit each have four double-flanged wheels, mounted in pairs; which run on the crane rails on the maintenance lock track and on the bridge. The four wheels on each unit are interconnected to enable the carriage to cross the gap between the maintenance lock track and the bridge.

The 'X' drive unit consists of a welded box frame, which supports the carriage drive wheels and drive components.

The four wheels are mounted on and keyed to shafts, each of which runs in two flanged bearing assemblies. A spur gear is mounted on the inboard end of each shaft and the two gears on each side are interconnected by idler gears. The idler gears are in turn driven from a double-worm speed reducer through spur gears.

The coarse 'X' drive motor is a two-speed motor with an integral electrically-released, spring-applied brake. The motor is connected to one end of the gear reducer input shaft while the other end is connected to a fine 'X' drive planetary gear reducer through an electromagnetic clutch. The clutch must be energized to engage the fine 'X' drive.

The idler unit is of similar construction to the 'X' drive unit, but without the drive system components. The two wheels on each side are interconnected by spur gears and the spur gears are interconnected by a shaft. A toothed sprocket is mounted at the center of the shaft to drive a shaft encoder through a roller chain. This encoder provides 'X' motion position information to the control system.

The fine 'Y' drive unit forms the central part of the carriage drive unit assembly and supports the gimbal assembly. It contains the fine 'Y' drive mechanism, a turntable bearing, and the 'X, centering mechanism. The fine 'Y' drive mechanism consists of three machine screw jacks,

which elevate a horizontal bearing plate to which the gimbal assembly is bolted. The jacks are interconnected by drive shafts and two miter gear boxes, and are driven by two hydraulic motors. The jacks have a nominal travel each side of the center position, which is the position maintained prior to coarse homing.

The gimbal suspension plate, to which the gimbal is bolted, is mounted on the bearing plate through the turntable bearing. The bearing allows some rotation around a vertical axis of the gimbal assembly, together with the head, the amount of movement being limited by an 'X' centering mechanism, which also centers the gimbal assembly when deflected.

The 'X' centering mechanism consists of two pre-loaded springs and a plunger assembly, contained in a housing. A linear potentiometer is mounted parallel to the centering mechanism and provides a signal proportional to the amount by which the head is off center. Similarly, there is a 'Y' centering mechanism, which is attached to the lower gimbal unit to allow for head tilting in the vertical plane.

The four carriage-to-bridge clamping mechanisms are arranged in pairs, one at each side of the fine 'Y' drive unit assembly, on each side of the carriage (Figure A-48). Each clamping mechanism is a pair of caliper-type jaws, which clamp onto the side of the bridge rail, and is actuated by a machine screw via two lever arms integral with the clamping jaws.

The actuating screw is driven by a reversible oil-hydraulic rotary motor powered by the FM oil hydraulic system via remotely controlled solenoid valves. The motor is located on the lower trunnion block and the motor shaft is keyed to the lower end of the actuating screw shaft. A double-thrust ball bearing takes the thrust between the screw shaft and the lower trunnion block. The upper trunnion block is threaded to accept the threaded portion of the screw shaft. The clamp, screw shaft and motor are all supported by the clamp fulcrum shaft and are free to move about it, thus ensuring equal clamping pressure on each side of the bridge rail.

In the event of failure of the control system to release the clamps, when required for carriage 'X' motion, a manually operated screw is provided to remove the pressure on the rail. With no hydraulic pressure to the motor, the clamp will not back off as the screw pitch is such that the clamp is self-locking.

A.15.2.2 Gimbal Unit Assembly

The gimbal unit assembly consists of an upper unit and a lower unit. The upper unit is bolted directly to the gimbal suspension plate of the fine 'Y' drive mechanism and carries eight roundway linear bearings, two at each corner. The lower unit is supported in the roundway bearings on two roundways which allow the lower unit to move in the 'Z' direction, relative to the upper unit. The 'Z' motion is provided by two double-acting hydraulic cylinders. The cylinder piston rods are secured to the lower unit, while the cylinders are bolted to the upper unit. Two gear racks are mounted on each side of the upper unit, adjacent to the hydraulic cylinders. Pinion drive units are mounted on each side of the lower unit and engage with the gear racks to permit the head to be moved manually, in case of failure of the hydraulic system.

A.15.2.3 Instrumentation and Control

Motor, clutch and brake control for the coarse and fine 'X' motion drives is normally performed automatically from the control computer, but manual control from the control console is possible.

The position of the carriage on both the maintenance lock tracks and on the bridge is detected by a shaft encoder, driven by a roller chain from the carriage idler unit wheel shaft. This provides a signal which is utilized by the control computer to provide carriage position control and console CRT display. There are also two position switches, mounted on the carriage, that are actuated at a point just beyond the end of normal carriage travel. When actuated, the switches provide signals to the control computer and also illuminate indicating lights mounted on the fuel handling control console.

A solenoid valve controls the operation of the two double-acting 'Z' drive hydraulic cylinders that provide 'Z' motion of the carriage. Position detection is by a shaft encoder driven from a gear box in the 'Z' drive mechanism. A limit switch provides positive indication, to the control computer, that the head is fully retracted and also operates a relay in the interlock systems for the coarse 'X' and 'Y' motions.

Position indication for the 'Y' drive mechanism is also from a shaft encoder. The 'Y' correction drive system hydraulic motors are controlled by a solenoid valve, for which normal control is from the control computer in response to signals originating from the 'Y' correction potentiometer.

During the homing operation, the head is allowed to pivot through an angle of approximately 40 minutes each side of the center position in the horizontal and vertical planes. This movement is sensed by two linear potentiometers, one mounted on the 'X' centering mechanism and one on the 'Y' centering mechanism. The signal from the potentiometers is used as an analog input to the control computer, to drive the 'X' and 'Y' correction drive systems, and to drive a digital voltmeter on the control console.

A.16 Catenary System

A.16.1 Purpose

The catenary system transfers the electric power supplies and control signals, and the D_2O and hydraulic oil flows, between the system connection points in the maintenance lock and the FM head and carriage.

A.16.2 System Description

The system, shown in Figure A-49, consists of a catenary loop, a powered catenary trolley, a 'Z' motion loop, and a hose and cable carrier. The catenary loop is connected, at one end, to the FM carriage, and at the other, to the powered catenary trolley, which travels on tracks in the maintenance lock. The flexibility and length of the catenary loop, and the travel of the trolley, permit the head to connect with all the service ports in the maintenance lock and with all reactor end fittings. System connections between the ends of the catenary loop on the catenary trolley and the termination points in the maintenance lock are made through a flexible hose and cable carrier. The 'Z' motion loop connects the end of the catenary loop on the carriage with the

FM head and provides the flexibility required to permit all motions of the head relative to the carriage, that is 'Z' motion, fine 'Y' motion and fine 'X' motion, including 'X' and 'Y' centering.

The catenary trolley is normally driven, under computer control, by the fuel handling control system. It is positioned such that minimum tension is applied to the catenary loop, and the loop is held clear of the floor, except when the head and carriage are in the maintenance lock.

A.16.2.1 Catenary Loop

The catenary loop consists of a series of flexible metal and rubber hoses and cables, supported and protected by a catenary chain. The chain is made up of two lengths of flat side plates interconnected by pairs of cross bars. The side plates are hinged together and can pivot in each direction, the amount of movement being restricted to limit the minimum bend radius of the hoses and cables in the loop. Wheels are provided on each side of the chain, in the area where the loop makes contact with the floor, to prevent damage to the floor and the catenary loop.

The loop is rigidly connected to the catenary trolley, on one end, and to the frame on the FM carriage, on the other end, via two loop supports. Couplings are provided at each end of the hoses. These are secured to the loop supports, in pairs, through mounting plates. The cables, which are installed in a continuous length from the junction boxes in the maintenance lock to the bulkhead on the FM, are clamped to the loop supports. A bar is installed across the loop support at the carriage end to keep the catenary loop clear of the FM, if the FM has to enter the maintenance lock with the catenary trolley at the end of its tracks nearest the shielding door (Figure A-50). This would only occur during breakdown conditions. The bar can also be used, in conjunction with holes in the trolley loop support, to allow the catenary loop to be lifted by the maintenance lock crane for maintenance purposes.

A.16.2.2 Catenary Trolley

The catenary trolley supports the end of the catenary loop in the maintenance lock. It consists of two longitudinal beams, interconnected by two transverse members. A dual roundway bearing is located at each end of the longitudinal beams. These bearings run on two roundways mounted on two wide flange beams which extend almost the full length of the maintenance lock.

A bracket is mounted on top of one of the trolley transverse beams to allow the trolley to be moved if the drive system fails. This bracket is shaped so that the hook of the maintenance lock crane will automatically engage it, when the hook is correctly positioned. When the hook is engaged, and the trolley drive system is disconnected, the crane can be traversed to pull the trolley in either direction.

The catenary trolley is chain-driven from a drive unit mounted below the trolley rails. The drive unit consists of a double-reduction worm-gear reducer, a drive motor, a torque limiter coupling and an output shaft, which carries a drive sprocket. The gear reducer is driven by a directly coupled reversible induction motor. The drive motor shaft is double-ended. A square-ended adaptor is mounted on the lower end of the shaft to allow the trolley to be manually driven under breakdown conditions, or for maintenance purposes.

Trolley position is continuously detected by a shaft encoder, driven from the end of the drive unit extension shaft. The control system positions the trolley relative to the FM carriage such that the

tension in the catenary loop is kept to a minimum, while keeping it clear of the floor as much as possible.

A.16.2.3 Flexible Hose and Cable Carriers

The flexible hose and cable carriers (power tracks) carry the electric power and control signal cables, and the D_2O and hydraulic oil hoses, between the rigid piping and junction boxes, in the maintenance lock and the catenary trolley. The carriers permit the catenary trolley to travel the full length of the lock.

Each carrier consists of two flexible chain loops, which run on a steel frame secured to the maintenance lock outer wall. The fixed end of each loop, connecting to the various supplies, is secured to the support frame, while the other end is attached to, and moves with, the catenary trolley. A series of rollers, mounted on a frame, run between the two loops and support the upper run of each loop. There is also a set of wheels, attached to every other roller, in order that the hose and cable carrier can move along its track and follow the progression of the carriage.

The electric power and control signal cables are installed in a continuous length from the junction boxes in the maintenance lock, through the hose and cable carrier, the catenary loop and the 'Z' motion loop to the junction boxes on the FM cradle. The hoses, however, are installed in three sections, one extending from the fixed piping in the maintenance lock to the trolley, one in the catenary loop and one in the 'Z' motion loop. Joint Industry Conference (JIC) hydraulic couplings are used at each position, except at the connection to the FM bulkhead, where quick-disconnect couplings are used.

A.16.2.4 'Z' Motion Loop

The hoses and cables at the FM machine end of the catenary loop are led either directly to the termination points on the carriage, or through the 'Z' motion loop to the bulkhead connections and junction boxes on the head cradle. Figure A-47 shows the 'Z' motion loop supported at its upper end on two support beams, which are mounted on the FM carriage drive unit assembly. Two vertical chain deflectors extend down from the support beam on the catenary side of the carriage and deflect the catenary loop away from the FM head when the carriage approaches the catenary trolley. A horizontal support frame is mounted on each side of the lower gimbal assembly of the carriage. These frames move with the lower gimbal and the FM head during fine 'Y' motion, 'Z' motion and FM head tilting, and support the lower ends of the cables and hoses of the 'Z' motion loop.

A.16.2.5 Instrumentation and Control

The catenary trolleys are each driven by a reversible three-phase induction motor. Two methods of control are available, automatic and manual. The control computer utilizes these signals, in conjunction with similar signals from the FM carriage shaft encoder, to position the catenary trolley.

A.17 FM D_2O Control System

A.17.1 Introduction

Fuel changes in the reactor are carried out by using two FMs working together, the machines being clamped one at each end of the appropriate channel.

In order to remove irradiated fuel and introduce new fuel it is necessary to remove the snout plug which normally closes the end of the FM and to "open" the coolant tube by removing the closure plug and shield plug from each end.

Three rams, the 'B' ram, the latch ram, and the 'C' ram of the FM, are used to remove these plugs and to move the fuel along the reactor channel into or out of the FM as required.

Two separator assemblies on each FM assist in controlling fuel and plug movement. The 'B' ram and latch ram are mechanically operated by ball screws driven by oil hydraulic motors. The 'C' ram and the separators are hydraulically operated by D_2O actuated cylinders.

A heavy water environment in the magazine housing is required because:

a) this region is in contact with the heavy water of the reactor primary system during fuel changing, and
b) a liquid coolant is required to prevent overheating of irradiated fuel bundles in the FM..

The FM D_2O control system provides the heavy water environment at the required conditions to different parts of the FM and the controlled motive power for the FM mechanisms driven by water-hydraulic actuators.

A.17.2 Purpose

The purposes of the D_2O control systems are:

a) To supply a controlled flow of heavy water to the FM sufficient to maintain the magazine at various desired temperatures and pressures, and, when required, to raise or lower the temperature and pressure to a new desired level.
b) To supply a controlled flow of cooling water to various seals in the FM.
c) To supply a flow of heavy water to the 'C' ram in such a manner as to control the direction, force and speed of movement of the ram.
d) To supply a flow of heavy water to the separators, to operate the actuators of the feelers, pushers and stops at controlled speeds and pressures.
e) To supply a flow of heavy water at controlled temperature to the ram housing.
f) To provide a method of detecting leakage of heavy water from the snout cavity (i.e., the cavity between the FM snout plug and the channel closure plug) when the FM is mechanically coupled to an end fitting.
g) To provide a means of filling, venting and draining the FM.

A.17.2.1 Temperature Considerations

The heavy water for control of the environment in the FM magazine housing is provided at temperatures between 40°C and 180°C (356°F). When the FM is on-reactor the temperature

control point for the magazine is 93°C (200°F). The magazine D_2O supply temperature is maintained at a higher temperature to compensate for cooling flow at 53°C to the FM ram assembly.

The temperature difference between the primary system fluid and the fluid in the FM is limited to avoid excessive thermal shock to the irradiated fuel bundles which have been exposed to the stress conditions in the reactor.

A.17.3 System Description

A.17.3.1 Introduction

The D_2O system, or group of circuits, which directly serves one FM is covered in the flowsheet general arrangement of Figure A-51. The same flowsheet applies to the circuits for each FM.

The physical location of the various circuit elements which are represented above the row of the catenary arcs is at the valve station, and the elements represented below the catenary arcs are located at the FM. Some of the FM water-hydraulic circuits given in Figure A-51 are process water and the others are power water.

The process water circuits provide environmental control in the magazine housing and in the ram housing; environmental control at the local regions of hydrodynamic seals on the drive shafts for the magazine, the 'B' ram and the latch ram; and the detection of leakage into and out of the cavity between the FM snout plugs and the end fitting closure plug.

The power water circuits are for hydraulic actuation of the 'C' ram; feeler, pusher and stop of the fuel separator, and the safety lock of the snout clamp.

For convenience in the process description, the total D2O system may be broken down into a number of sub-circuits associated directly with individual FM components (Figures A-52 to A-55). In the following sections the text is generally in terms of one FM since the circuits are identical.

A.17.3.2 Magazine Supply Line

The magazine is supplied with D_2O at approximately 38°C (100°F) and maintains this temperature when empty or with new fuel. On receiving a full load of irradiated fuel, the temperature rises approximately 8°C (14.5°F).

The magazine D_2O control circuit is given in Figure A-52. The magazine supply line is shown on the left side of the sheet. Water enters the valve station via manual shut-off valve and flows via the magazine supply line through the catenary hoses to discharge into the magazine.

Before leaving the valve station and returning to the low pressure side of the supply system, this process water is throttled by the pressure control valve which controls magazine pressure.

The water temperature in the magazine is detected by resistance temperature detectors (RTDs) mounted in the magazine housing. The signals from the RTDs are averaged and give temperature indication.

Two calibrated orifices FE-22 and RO-21 are at the upstream end of the supply line. Orifice FE-22 is a flow monitoring element, across which is a differential pressure transmitter FT-22.

Orifice RO-21 is a simple flow resistance element whose function is to provide a pressure drop, which in addition to the pressure drop in tubing and catenary hoses, sets the flow to the FM magazine.

In the magazine supply line, the motorized valve PV-17, shown downstream of orifice RO-20, shuts off the flow when the FM operates at reduced water level at the new and irradiated fuel ports.

Check valve NV1 prevents reverse flow from the FM in case of a catenary hose failure.

A.17.3.3 Magazine Return Line

The return flow of heavy water from the FM can take different routes depending on the mode of FM operations. One of these routes is via the "magazine return line" which goes back through the catenary, while another is a direct route into the reactor primary system via the FM snout. A third route is a line provided at the fuel transfer port through the weir to tank, TK3.

A.17.3.4 Magazine Supply Pressures

Four magazine pressure levels for the corresponding FM operating conditions are listed below:

1. Park Condition - 3.10 MPa (450 psi)

   "Park" describes the situation when the FM is not performing any particular task but is kept in a state of readiness. The FM when at "Park" condition may be clamped to the new fuel port, or may be in transit between the new fuel port and reactor or between the reactor and irradiated fuel port.
2. Off-Reactor (High) Condition - 11.40 MPa (1650 psi)

   In this situation the FM is mechanically clamped to a reactor channel end fitting but is hydraulically isolated from the reactor.
3. On-Reactor Condition - 11.04 MPa (1600 psi)

   The FM is clamped to reactor channel and hydraulically connected. The magazine pressure is slightly higher than the channel pressure to provide positive flow from magazine to reactor.
4. Fuel Transfer (Low) Condition - Atmospheric Pressure

   The FM is clamped to fuel ports and either receiving new fuel or discharging irradiated fuel.

When the FM is at either condition (1) or (2) the return flow is through the magazine return line and the pressure is controlled by valve PCV-1 in this line.

Valve positioning is derived from pressure transmitters monitoring the magazine sense line, the resultant pressure being determined by the selected set point. Duplicate catenary hoses, each with its own isolating valve, are provided for the magazine return flow. In the event of a ruptured hose, that line may be isolated while magazine return flow is maintained through the other line.

The check valves NV23 and NV24 are provided to prevent return of flow in the event of a burst catenary. Two accumulators, TK1 and TK2, in the magazine return line upstream of the control valves, dampen any sudden pressure fluctuations.

To prevent over-pressurization in the FM head, two safety relief valves RV1 and RV2 on top of the magazine housing are set to operate at 12.64 MPa (1835 psi) and 13.24 MPa (1922 psi) respectively.

A.17.3.5 Shaft Seals Circuits

The four ball screws driving the 'B' ram and the latch ram and the drive shaft of the magazine pass through the pressure containment boundary of the FM.

Hydrostatic seals are provided on the heavy water side to accommodate the high pressure differential with a minimum of frictional losses.

Duplicate catenary hoses are provided to guarantee a supply to the seals in the event of a hose failure. Under failure condition, check valves NV4 or NV5 provide remote isolation from FM, but hand-valves V30, or V31 must be closed to prevent continued flow from supply.

A.17.3.6 Superflow Circuit

For some operations on the reactor it is necessary to increase the total flow into the FM. This additional flow is intermittent and is brought to the FM through the "superflow" circuit.

A fixed orifice and needle valve upstream of the catenary are provided to establish the required flow rate. A remote shut-off valve is actuated when the flow is required. In case of catenary hose failure a check valve automatically isolates the FM side against D_2O loss, while the valve station side again must be manually isolated by closing the needle valve.

A.17.3.7 'C' Ram Hydraulic Control Circuit

This circuit is shown in Figure A-53.

The 'B' ram and 'C' ram together form a telescopic ram assembly having an extended stroke capable of reaching through the FM magazine half way into the reactor channel. Their functions include the provision of appropriate forces and movements to withdraw and replace the snout plug, closure plugs and shield plugs, and to move fuel as required.

A third mechanism, the latch ram, has a short stroke superimposed onto the 'B' ram to assist in these operations. Both the 'B' ram and the latch ram are driven mechanically by ball screw assemblies, whereas the 'C' ram is powered by D2O hydraulics.

The 'C' ram is a telescoping hydraulic ram carried within the latch ram and 'B' ram. The 'C' ram motion is produced by differential pressures applied during operation.

Heavy water from the actuator supply line passing through a flow element and control valve, is directed by a directional control valve to the advance or retract side of the same cylinders with exhaust water returning to the valve station.

The force produced by 'C' ram results from the pressure, which is determined by the setting of a control valve. The setting of the control valve is derived from the differential pressure existing between the ram ports. The pressure is monitored by a differential pressure transmitter which provides the feedback. One side of the pressure transmitter is connected to the magazine sense line, thus the ram operating pressure is always referred to the magazine pressure.

Five 'C' ram forces are provided, each of which is produced when the appropriate setpoint is selected. Ram operating speed is regulated by friction within the ram, line impedance and a throttling valve in the return line.

Downstream of the control valve is a check valve, followed by a relief valve. This relief valve is connected to relieve to the return line and is referenced to the upstream side of the check valve. The relief valve will open when the pressure across the check valve exceeds 70 kPa (10 psi).

The differential relief valve is included to prevent hydraulic locking in the circuit, which would otherwise occur under three separate modes of operation as follows:

a) 'C' ram stalled against a component in the advanced position and held in this position while 'B' ram is advanced.
b) 'C' ram fully retracted within 'B' ram while 'B' ram retracts.
c) During "on reactor" fueling operations, 'C' ram set for "advance" but is moving in the retract direction, that is, being pushed by the fuel string which in turn is pushed by the 'B' ram of the other FM.

A 'C' ram by-pass flow is provided from downstream of the control valve to the return line. This ensures a flow which does not fall below a minimum level to maintain control and thus hold the pressure at a given setpoint. This is required when the ram has been driven to a desired position and is stalled, consuming only leakage flow. In addition, the by-pass is required to prevent overpressurization of the supply line which would raise the reference power (and thus the cracking pressure) of the overhaul relief valve.

Emergency differential pressure relief valves are provided to prevent build-up of excessive ram force. Two pressure transmitters connected in parallel across the actuating line sense the pressure differential between the actuating lines and provide an independent check on the direction of motion selected.

A.17.3.8 Separators Control Circuit

The fuel separators are two similar mechanisms, mounted on the FM to separate fuel bundles, shield plug or ram adaptor. They perform identical actions which are carried out simultaneously.

Three independent water-hydraulic circuits are associated with the two separator assemblies of a FM (Figure A-54). One circuit is for the feelers, one for the pushers and one for the side stops.

The hydraulic supply pressure to the actuators is referenced to magazine pressure, since the mechanisms operate against magazine pressure.

D_2O is taken from the actuator supply line at a temperature of about 54°C (129°F) and a pressure of 3.43 (491), 7.84 (1138) or 16.37 MPa (2380 psi) depending on the mode of operation, and is fed to the different circuits through a pressure reducing valve.

The pressure reducing valve has its pilot line connected to the 'C' ram return line which in turn is referenced to magazine pressure. The valve is set to give an outlet pressure 3.43 MPa (490 psi) above magazine pressure.

The feeler circuit controls two feeler actuators, one for each of the two separators per FM. The two separators are identified as 'left hand' and 'right hand' as viewed from the rear of the FM.

The feeler circuit provides three hydraulic conditions known as ‘feelers inserted’, ‘feelers removed’ and ‘feelers float’.

The basic feeler circuit consists of supply and return lines connected through a four-way directional valve, actuating lines and a double-acting actuator. The circuit provides simple two-way directional control of the actuator, that is, insertion and withdrawal. Both sides of the actuators are connected through an additional directional valve, thereby equalizing the pressure to obtain the float condition.

The ‘feelers float’ condition applies when the feelers are riding on a moving fuel bundle in readiness to drop into the approaching gap between bundles, and to check the presence of fuel or shield plug.

The ‘float’ condition not only requires zero hydraulic forces on the actuators, but also zero hydraulic restraint to movement of the actuators as the feelers must be free to move up and down with irregularities on the surface of a spent bundle, and must drop into the gap between bundles without delay. A light downward force is exerted by a spring in the feeler’s position feedback assembly.

The D_2O circuits for the pushers and fuel stops are identical except that the pushers do not have a float condition and thus the directional valve for this function is not present. In addition, twice the number of actuators are used on the fuel stop mechanisms. Again D_2O at 3.43 MPa (500 psi) above magazine pressure is taken to the actuators on the FM via solenoid operated directional valves.

A.17.3.9 Snout Cavity Leak Detection Circuit

Two separate checks are required during FM sequences to ensure that no FM snout D_2O leakage exists and that the primary heat transport system boundary remains intact after a fueling operation. Each check is carried out after the respective seal has been made as described below, and in Figure A-55.

The snout cavity leakage check is carried out after the FM has been mechanically clamped to the end fitting, and before the snout plug is removed. The test ensures that a good hydraulic seal exists at the interface between the FM snout and the reactor channel end fitting, that is, that D_2O will not leak from the snout cavity to atmosphere.

The channel closure leakage check is carried out after completion of the fueling operation and when the channel closure and snout plugs have been replaced, but before the FM is unclamped. The test will ensure that the channel closure has been properly replaced in the end fitting and that D_2O will not leak past the closure to atmosphere after the FM has been unclamped.

Leak detection is carried out by the use of a differential pressure transmitter and suitable valving to join or isolate the cavities from the D_2O system. The pressure transmitter is deflected by the flow of water into or out of it, resulting from any leakage. The electrical signal produced is differentiated and the value representing rate of leakage is displayed.

A.17.3.10 Snout Clamp Lock Hydraulic Circuit

Snout clamping action is carried out by rotation of the clamping barrel, driven by two gear racks which are oil hydraulically operated.

To ensure clamping action is maintained one of the racks is locked by the insertion of a pin. This pin is pushed into position by a water hydraulic actuator which is pressurized from the snout cavity. The piston in the actuator operates against a spring pressure so that when the pressure is reduced the piston is pushed back and the lock pin is withdrawn. Thus as long as the snout cavity pressure remains above a specified level inadvertent unclamping cannot take place.

A.17.3.11 D_2O Discharge Port Mechanisms

All operations on the new fuel, spent fuel and ancillary port are performed with the FM magazine depressurized and its D_2O level lowered below the snout opening.

At each port a discharge mechanism connects the FM to the drain to lower its D_2O level. Each mechanism has pneumatic actuators to raise it into contact with the drain port on the FM. Through a suitable linkage, pneumatic actuators on each discharge port operate the drain valve on the FM. A further actuator at the new fuel port can be operated to open a valve which allows the drainage of the D_2O/oil collection tank on the FM.

D_2O from the drain tank on the FM drains by gravity to a holding tank, from which it is pumped to the main D2O storage tank. The mixed D_2O and oil is drained from a holding tank on the FM to another tank and disposed of manually.

A.17.4 Equipment Description

A.17.4.1 Directional Control Valves

The directional control valves which are used in the ‘C’ ram and separator circuits are special poppet type valves designed for AECL CANDU.

The valve is a magnetically operated, latching, four-way, two-position valve with manual override. A latching mechanism holds the valve in the last energized position when the solenoids are de-energized. In the event of solenoid failure, a spring or latch mechanism holds the poppet in the last energized position, regardless whether the poppet was moved by solenoid or manual override.

A.17.4.2 Overhaul Relief Valve

The ‘C’ ram hydraulic control circuit is fitted with an overhaul relief valve to prevent hydraulic locking in the circuit, which would otherwise occur under some modes of operation. The valve is a pilot controlled, poppet type pressure relief valve specially designed for this application.

A.17.4.3 Pressure Reducing Valve PRV-1

The separator hydraulic circuit is required to provide close control of the actuator forces to avoid damage to the fuel, as the separator actuators contact and act against the relatively fragile spent fuel bundles. As well, the displacement volumes of the separator actuators are small and so uncontrolled pressure fluctuations could quickly produce complete repositioning of the actuators.

For close control of actuator pressures it is necessary that the actuator supply and return pressures be referenced to magazine pressure, which is accomplished by a pressure reducing

valve. This valve is essentially a poppet type of special design which provides a high degree of internal hydraulic balancing both statically and dynamically.

A.17.4.4 Piping and Tubing

All the lines on the valve station and FM equipment are made of stainless steel.

A.18 FM Oil Hydraulic System

A.18.1 Introduction

Several functions on the FM and carriage are carried out by means of oil hydraulic power provided by power supplies and their associated control systems through the catenary system.

The oil hydraulic system operates actuators, which, with their associated valves and tubing, are mounted on the FM and carriage.

A.18.2 Purpose

The purpose of the FM oil hydraulic system is to provide controlled conditions of flow, pressure and temperature to operate its associated actuators on the FM and carriage. A block diagram of the complete system for one FM is shown in Figure A-56.

A.18.3 System Description

The overall FM oil hydraulic system consists of two identical and completely separate systems, one for each side of the reactor. Each system is comprised of an oil hydraulic power supply system and oil hydraulic control circuits, servicing the FM and carriage.

A.18.3.1 Oil Hydraulic Power Supply System

The hydraulic power supply is composed of:

5. The pressure generating unit (power pack) including the oil storage tank.
6. The smoothing and filtering unit with its isolating valves (valve station). The description of this system is outside the scope of this appendix.

A.18.3.2 FM and Carriage Oil Hydraulic Control Circuits

The oil hydraulic power is supplied via flexible catenary hoses which terminate with quick disconnects at the FM and carriage manifolds and operates the following actuators:

Magazine Drive
'B' Ram Drive Speed and Force Control
Latch Ram Drive
Snout Clamp
Lubrication Pump Drive
D_2O Valves
'Z' Drive
Fine 'Y' Drive
Carriage to Bridge Clamps.

A.18.3.2.1 Magazine Drive

The magazine is driven by an oil hydraulic motor (Figure A-57) operating through gears and a 'Ferguson' drive. Direction of rotation is determined by the selection of two solenoid valves. With one solenoid energized rotation is clockwise and with the other energized rotation is counterclockwise. Stop is produced by both solenoids being de-energized.

The supply pressure of 12.54 MPa (1820 psi) is reduced by a pressure regulating valve to 3.45 MPa (760 psi). Return flow resulting from rotation in either direction passes through a flow control valve to regulate the speed of rotation.

Pilot operated check valves in the motor feed lines prevent flow when the solenoid valves are not energized thereby stopping motor rotation.

A.18.3.2.2 'B' Ram Drive Speed and Force Control

The 'B' ram is a ball screw type ram driven through gears by an oil hydraulic motor (Figure A-58).

A pilot directional control valve directs oil to the motor to operate the ram in the advance or retract direction. In the stop position both lines to the motor are blocked to prevent oil flow and ram movement.

By the use of three flow regulator valves and a further pilot directional control valve, three flow rates can be selected for the oil in the return line. In this manner three speeds of operation are obtained.

The 'B' ram operates at five levels of force. Force selection is regulated by a pressure regulating valve in the supply line. This valve is controlled by a pilot pressure derived from one of four pressure regulating valves, each of which is set to a specific pressure. Associated with each pressure regulating valve is a solenoid valve. Thus by energizing a solenoid valve a pressure regulating valve becomes operative to produce the desired ram force. In the fifth force level the

main regulating valve is closed resulting in zero pressure across the drive motor and consequently zero force is produced.

A.18.3.2.3 Latch Ram Drive

The latch is a ball screw type ram driven through gears by an oil hydraulic motor.

Oil supply pressure is reduced to 2.74 MPa (400 psi) by a pressure reducing valve to provide the required latching force when applied to the drive motor. A flow regulating valve in the return line determines drive speed.

A directional solenoid valve operates to select advance or retract. When the solenoid is de-energized both lines to the motor are blocked and thus the motor is prevented from rotating.

A.18.3.2.4 Snout Clamp

The snout clamp mechanism clamps the FM snout to the reactor end fitting and provides a pressure tight connection.

The mechanism is driven by four single-action oil-hydraulic pistons (Figure A-59) which are installed at either end of two racks. The racks mesh with a gear-screw which in turn moves the clamping barrel in an axial direction to produce the clamping and unclamping action.

A solenoid directional valve determines the direction in which oil pressure is applied to clamp or unclamp.

A.18.3.2.5 Ram Lube Pump Drive

Lubricating oil for the 'B' ram and latch ram is supplied to their various bearings, gears and moving parts.

From the hydraulic oil supply, oil at reduced pressure is supplied to a hydraulic motor which drives a pump to circulate the lubricating oil. The oil is fed to a distributor which regulates the flow to the various components. Having passed through the components the lubricating oil collects at the bottom of the ram gearbox, from where it returns to the pump to be recirculated.

A relief valve limits the oil pump's output which is normally greater than the consumption of the distributor. A filter is included in the output line from the pump to ensure the cleanliness of the lubricating oil.

The solenoid valve controlling oil flow to the hydraulic motor is energized when the 'B' ram or latch ram are operated.

A.18.3.2.6 D_2O Valves

The FM system includes on/off D_2O valves operated by oil hydraulic actuators.

Oil for these functions is derived from the oil hydraulic supply with the operating pressure reduced by a pressure reducing valve. Directional solenoid valves are employed to control the hydraulic oil flow. A relief valve is installed across the supply to provide overpressure protection.

A.18.3.2.7 'Z' Drive

The 'Z' motion is the FM movement in the line of the fuel channel axis. The FM is advanced for clamping to an end fitting and following unclamping, it is retracted for clearance between snout and end fitting to permit the machine to traverse the reactor face. The 'Z' motion drive is actuated by two double-acting hydraulic cylinders, mounted at the top of the upper gimbal, one on each side, with the cylinder rods connected to the lower gimbal.

Hydraulic oil from the supply is reduced in pressure by a pressure regulating valve to limit developed forces. A directional solenoid valve determines the application of oil to the operating cylinders to produce advance or retract 'Z' motion. In both 'Z' advance or 'Z' retract the pressure is applied through a check valve but the return is through the regulating valve. In this way the advance and retract speeds may be adjusted independently.

Connected between the cylinder supply lines is a fixed flow element. This permits a low flow between the supply lines when the solenoid valve is de-energized, that is, in the stop position. Thus the FM can move, due to thermal effects, when clamped onto an end fitting. The flow through this element is very small and thus does not adversely affect the advance-retract operation.

A.18.3.2.8 Fine 'Y' Drive

The fine 'Y' drive consists of two oil hydraulic motors connected together through suitable gearing to three screw jacks.

Hydraulic oil from the supply is reduced in pressure to give the required torque to raise the FM. A pilot operated directional control valve directs the oil to the motors for raising or lowering.

Check valves in parallel with regulating valves are in both lines to the motors so that the raise speed and lower speed can be adjusted independently.

A pressure regulating valve across the input is set to prevent overpressurization.

A.18.3.2.9 Carriage to Bridge Clamps

The carriage to bridge clamping mechanism is driven by four oil hydraulic motor driven screw jacks. The oil to the hydraulic motors is applied through two solenoid valves (Figure A-60). When one valve is energized the motors are driven to clamp the mechanism and energizing the other valve causes the motors drive to unclamp. With both solenoids de-energized the system is held stationary.

Two solenoid valves are employed since the force applied to clamp differs from that to unclamp and the two related oil pressures are set by two independent pressure regulating valves.

A.18.4 Major Equipment

A.18.4.1 Oil Reservoir

The oil reservoir is a totally sealed tank internally treated to prevent corrosion and suitably sized to minimize oil foaming and air entrainment. The tank is provided with a clean out panel, oil sight glass and filter breather assembly. A level switch provides indication of critical, low and full levels and also controls the pumps.

An electric heater ensures the minimum temperature is adequate for satisfactory operation of the oil system.

A.18.4.2 Supercharge and High Pressure Pumps

The pressurization of hydraulic oil is performed by two electrically driven pumps in series. The first pump provides an adequate supply of oil to the second pump for efficient operation. The second pump delivers oil at the required supply pressure and flow.

A duplicate pair of similar pumps provides a backup in case of failure. Normally only one set of pumps is operated at one time.

A.18.4.3 Strainers and Filters

Strainers and filters are installed in the oil system to ensure the cleanliness of the oil. In each pump circuit, a strainer is located in the reservoir in the suction line. The air filter between the priming pump and pressure pump will automatically bypass in the event of filter blockage. A further filter located in the output line gives final protection against foreign material in the oil before it enters the system.

A.18.4.4 Heat Exchanger and Accumulator

An accumulator in the output line reduces the effects of pressure transients. Oil returning to the reservoir passes through a heat exchanger which removes the heat acquired from the FM and generated by fluid friction.

A.18.4.5 Piping and Tubing

The lines of 1/2 inch nominal size and smaller are constructed from stainless steel tubing. All other lines are carbon steel pipe. On the FM all tubing is from stainless steel, regardless of size.

A.18.4.6 Location

The power pack, valve panel and heat exchanger are located in the reactor building and are accessible during reactor operation.

The oil hydraulic drive actuators and oil hydraulic control elements for the balance of the system are located on the FM and its support cradle and carriage. They are generally not accessible at the reactor face during reactor operation.

A.18.4.7 Instrumentation and Control

The general method of controlling the FMs is by computer.

The conditions within the oil hydraulic system are monitored by various control elements. Oil level and pump operation are determined by a level switch within the oil reservoir tank. Return oil temperature is monitored and the cooling water to the heat exchanger regulated to limit oil temperature during operation. The oil temperature within the oil reservoir tank is monitored to ensure operation within a specified range. Above the limit an alarm is given and below the limit an electric heater is turned on.

Pressure switches are used to indicate the condition of the filters and a pressure switch in the output line gives an alarm if the oil pressure falls below a desired level.

A.19 Irradiated Fuel Transfer and Storage System

A.19.1 Introduction

The irradiated fuel transfer system covers the process and equipment of the irradiated fuel transfer operations from the reception of irradiated fuel bundles, at the irradiated fuel port, until the irradiated fuel bundles are stored, under water, in the irradiated fuel storage bay. The general arrangement of the irradiated fuel transfer system is shown in Figures A-2 and A-61. The associated building areas are listed below.

Dimensions of Irradiated Fuel Bays

BAY	BAY SIZE	WATER DEPTH	REMARKS
Discharge Bay	T Shape, Top 7.6 x 24 m (25 x 78.75 ft)	5.3 m (17.5 ft)	Height of Bay Floor to Ceiling is 9.7 m (31.75 ft)
Transfer Canal	Area in R.B.: 1.8 x 1.8 m (6 x 6 ft). Opening: 1.5 x 1.2 m(5 x 4 ft). Area in Service Bldg. 2.4 x 2.6 m (8 x 8.5 ft)		
Reception Bay	8.5 x 4.6 m (28 x 15 ft)	7.6 m (25 ft)	
Storage Bay	11.6 x 22.5 m (38 x 74 ft)	7.6 m (25 ft)	
Defected Fuel Storage Bay	2.4 x 5.5 m (8 x 18 ft)	6.0 m (20 ft)	
Irradiated Fuel Shipping Area	4.6 x 8.5 m (15 x 28 ft)		Part of Reception Bay

The expected average radiation dosage to operating personnel in the bay is 6 to 10 μSv/h (0.6 to 1.0 m rem/h).

A.19.2 Purpose

The irradiated fuel transfer system is designed to transfer and handle the irradiated fuel bundles on route to the irradiated fuel storage bay from the irradiated fuel port, after the bundles have been discharged by the FM. A separate defected irradiated fuel storage bay and associated equipment accommodates fuel bundles with cladding failure, due either to inadvertent core exposure beyond maximum rated bundle power or mishandling on transfer.

The irradiated fuel storage bay is designed to provide the nuclear generating station with underwater shielding and cooling for the irradiated fuel bundles, which are potential radiation and heat sources. The storage bay capacity allows for ten years of reactor full-power operation.

A.19.3 System Description

A.19.3.1 Irradiated Fuel Transfer and Handling System

A.19.3.1.1 Normal Operation

After the FM receives a certain number of irradiated fuel bundles (normally eight) from the reactor fuel channel, it travels to the FM maintenance lock from the reactor vault. The following operations are then performed automatically under digital computer control and access control interlocks prevent entry into the irradiated fuel discharge room during irradiated fuel discharge. The machine clamps onto the irradiated fuel discharge port, withdraws the snout plug, installs the guide sleeve, picks up the ram adaptor and lowers the magazine D_2O level. Before the irradiated fuel bundles are pushed into the irradiated fuel discharge port, the cart with an empty rack must be on the discharge bay conveyor under the irradiated fuel elevator with the rack indexed to its first-loading position, the elevator ladle must be in line with the irradiated fuel discharge port and the elevator bundle stop in the correct position, the two irradiated fuel port valves must be fully closed, and the irradiated fuel cooling system and ventilation system must be operational.

The two irradiated fuel port ball valves are then fully opened, and the ‘C’ ram advances to push the first bundle pair onto the ladle. Fuel is normally transferred in pairs. The bundles are stopped by the irradiated fuel elevator bundle stop. The ‘C’ ram retracts into the FM magazine and the irradiated fuel elevator’s bundle stop moves away from its stopping position. The irradiated fuel ladle is then lowered into the discharge bay water to deposit the irradiated fuel bundles on the rack.

Once the elevator is fully down, the conveyor rack indexes to the second-loading position, and the elevator bundle stop moves back to the stopping position. The FM magazine indexes to the next full fuel station and the discharge of irradiated fuel continues until all irradiated fuel bundles in the FM magazine are discharged onto the conveyor rack. Then the discharge port ball valves are closed, and the guide sleeve is withdrawn into the FM magazine. The FM snout plug is reinstalled, the magazine re-pressurized and the FM head unclamps from the irradiated fuel port. The FM is then ready for its next assignment.

The irradiated fuel transfer operation continues underwater in the discharge bay. The loaded rack on the conveyor cart is driven from the discharge bay to the reception bay by electric motors mounted above the water on the bay walkway floors. The two conveyors are normally controlled by the station digital computer but a manual operating facility is also available.

Once the cart reaches the gap between two conveyors, one slotted bracket of the cart disengages the discharge bay conveyor, and automatically aligns with the reception bay conveyor, which drives the cart further to the reception bay. The cart will stop at its end travel in the reception bay. After stopping, semi-automated irradiated fuel handling equipment transfers the irradiated fuel bundles from the cart onto irradiated fuel storage trays. The cart will then be driven back to the discharge bay, to the rack first-row-bundles loading position under the elevator ladle, for the next loading.

Each tray holds a total of 24 bundles, placed in two rows. The reception bay usually has one week's supply of empty storage trays for operational flexibility. After the loading of irradiated fuel bundles to the storage tray, the tray is moved onto a storage tray conveyor for transferring the storage tray from the reception bay to the storage bay through an opening in the wall between the two bays. Once in the main bay, the irradiated fuel storage tray is lifted by a hoist on the manbridge and placed on a tray stand for interim storage. The storage tray conveyor then retracts. Once completely retracted, it seals the opening in the wall with a flow obstruction plate, in order to minimize the movement of water between the two bays.

The manbridge is electrically driven, and spans the width and runs the full length of the storage bay to provide a movable working platform for the operator to handle the irradiated fuel. The operator on the manbridge above the bay water maneuvers all storage trays, and stacks them up to 19 trays high, using the manbridge electrical hoist and storage bay handling tools.

Stacking up to 19 trays high provides a minimum depth of water shielding of 4.1 m (13.5 ft) from the top row of the irradiated fuel bundles to the water surface, in order to maintain acceptably low radiation levels in the irradiated fuel bay.

The irradiated fuel bundles are expected to be stored in the storage bay for the next 10 years, or more. Irradiated fuel will then be loaded into shipping flasks in the reception bay for shipping from the station to permanent storage that is scheduled to commence in 2035. By using the Service Hall crane, the loaded shipping flask would be passed through a removable hatch above the reception bay, at the elevation of the air lock level. The shipping flask would then be removed and be loaded onto a transfer truck to transport the irradiated fuel to a permanent storage site.

A.19.3.1.2 Abnormal Operation

A.19.3.1.2.1 Stuck Fuel Bundles

An abnormal operating state exists when the fuel bundles become stuck in the irradiated fuel port, or on the elevator before entry into the water of the discharge bay.

When the operator is alerted to this situation, either by the monitoring of equipment operations or due to the pre-set timed alarm indication, he must initiate the appropriate steps to ensure that the fuel bundles are kept cool, thereby preventing rupture due to overheating. Four minutes is allowed before spray cooling is initiated and 12 minutes where flooding is used.

Standby cooling water is applied in accordance with the applicable mode of operation.

Since H_2O is used for cooling, there is a possibility of downgrading the D_2O in the FM, resulting in significant cost penalty. If irradiated fuel is exposed to air for a prolonged period, there is possibility of fission release. The operator will consider the different options before cooling is initiated.

Once cooling of the bundles is assured, means to free the stuck fuel and lower it into the bay can be decided upon and executed. If the fuel bundles have been damaged, they will be placed in the defected fuel storage carousel for defected fuel canning at a later time.

A.19.3.1.2.2 Semi-Automated Irradiated Fuel Handling Equipment Out of Service

If the semi-automated irradiated fuel handling equipment in the reception bay is out of service, the conveyor cart may be unloaded manually by the operator from the walkway floor. The loaded rack is transferred from the cart to a rack stand, using the transfer rack handling tool. An empty rack is then placed on the cart, and the cart is moved back to the discharge bay, and positioned under the irradiated fuel elevator for the next loading operation. In the reception bay, the operator manually transfers all irradiated fuel bundles from the loaded rack onto an irradiated fuel storage tray and continues the operation.

A.19.3.2 Defected Fuel Transfer and Handling System

The defected fuel detection system is used to detect the presence of defected fuel in the reactor core. By monitoring the bulk coolant, it detects and indicates in which reactor loop the defected fuel is in. The purpose of the defected fuel location system is to identify in which channel of the particular coolant loop the fuel defection occurred and to find, in this particular channel, which bundle pair contains the defected bundle(s).

The design target for defected fuel bundles at station maturity is 0.3%, average, of discharged fuel bundles, with 1.5% maximum over a short term.

After the FM receives the defected fuel bundle, it is transferred onto a rack in the discharge bay. The rack is indexed two rows of loading positions after receiving a defected fuel bundle. The defected fuel bundle is then manually removed from the rack and set into a ‘carousel’ for temporary storage. After a decay and degassing period of four weeks or more, it is manually moved from the carousel, inserted into a can and sealed with a lid. The operator, using a canning device and a set of extension tools, performs the bundle handling and canning operations from the discharge bay walkway. This method prevents continued fission-product escape from the defected fuel bundle.

After canning, the canned defected fuel (one bundle per can), is transferred, one can at a time, by the discharge bay/reception bay conveyor. Using the defected fuel handling tools, the operator on the reception bay walkway floor manually opens the defected fuel bay isolation port valve, fully advances the defected fuel transfer mechanism into the reception bay from the defected fuel bay, and moves the canned-defected fuel bundle onto the mechanism from the reception bay conveyor. Then he manually retracts the transfer mechanism, closes the bay isolation port valve and moves the canned-defected fuel bundle onto a defected fuel storage tray, which is supported by a tray stand in the defected fuel storage bay. Each tray contains 10 canned defected fuel bundles in a single row and is stacked to a 10-tray height.

A.19.4 Equipment Description

A.19.4.1 Irradiated Fuel Ports

Spent fuel must be discharged from the FM to the discharge bay, and then to the main storage bay area. Two irradiated fuel ports are mounted in the wall between the two FM maintenance locks and the irradiated fuel discharge room. The two irradiated fuel ports (Figure A-62), are mounted in port sleeves in embedments in the walls. Each port consists of an end fitting, a housing and two ball valves.

The discharge room is located in the reactor building, with the room walls forming part of the containment boundary. The two ball valves, mounted in series on the bay end of each port, seal the ports and complete the containment boundary when fuel is not being transferred. When fuel is being transferred, the FM is locked onto the port, thus forming part of the containment boundary.

A carbon steel framework, approximately 1.5 m (5 ft) high by 1.5 m (5 ft) wide, is embedded in the concrete containment wall. Centered in this embedment is an opening to accommodate the irradiated fuel port assembly.

A port sleeve is mounted in the wall embedment opening and is aligned using eight radially mounted centering bolts. After alignment, the space between the embedment and the port sleeve is packed with lead wool for shielding purposes. A ring is installed at each end of the lead wool cavity and welded to the embedment and port sleeve.

A port housing flange, at the FM maintenance room end, and a flange, at the discharge room end, are mounted inside the port sleeve and are secured to the sleeve at the discharge room flange. The port is thus cantilevered from the discharge room end to provide the degree of flexibility necessary for FM machine lock-up. A split-sleeve spacer bolts around the port housing, filling the void between the housing and the port sleeve for shielding purposes.

The port slopes down towards the FM end, at a slight angle, to ensure that D_2O carried into the port with the fuel bundles drains back into the FM.

An end fitting mounts to the flange at the FM maintenance lock end of the port. It accommodates the clamping action of the FM snout. A channel closure can be installed in the end fitting to seal the port, but is normally not required.

A detachable stainless steel liner tube is installed in the bore of the port housing, forming an annulus between the liner and the housing, for emergency cooling of irradiated fuel, if required. The liner has a row of ten holes along the top and five holes around the FM end. The annulus connects to the standby cooling system water supply, to provide adequate cooling water through the liner holes for cooling of any irradiated fuel bundles, which may, inadvertently, be held up in the port.

The two ball valves are of similar construction, metal-sealed, with an adjustable open-position stop, to provide a clear bore for the passage of the fuel bundles. The valves are operated by double-acting pneumatic actuators. Each valve is controlled separately, either by handswitch, from the control console, or automatically, by the fuel handling control system. Manual operation of the valves is possible using a handscrew on the valve actuator. Adjustable position limit switches indicate the fully-open and fully-closed valve positions.

A.19.4.2 Elevating Ladles and Drives

Two electrically driven elevating ladles (Figure A-63) accept the irradiated fuel bundles from the irradiated fuel ports and lower them onto a rack on a conveyor at the bottom of the discharge bay room.

The two elevators consist of two ladles (Item 5) running on tubular and angle rails (item 7). The rails are inclined at 30° to the vertical, except for the lower 1.2 m (4 ft), which are vertical. The

30° inclination of the rails allows both elevators to terminate at the single conveyor at the bottom of the discharge bay, providing that only one ladle enters the vertical section at any time.

Each ladle accommodates two fuel bundles and is suspended by a stainless steel cable from a drum mounted above the rails. The drum is driven by an electric motor and gear reducer, mounted in the adjacent new fuel room to facilitate access under conditions where irradiated fuel is located inside the discharge room.

The rails are manufactured and assembled in three major sections, two upper sections and a lower section. The lower section, which is underwater, is mounted in slots for easy removal without draining the bay. The joints between the upper and lower sections are spigoted for ease of assembly and disassembly.

The ladle assembly consists of a frame, which runs on two gimballed guide roller assemblies and a fixed guide roller assembly. The gimballed rollers run on the tubular rails, while the fixed rollers run on the angle rail. The gimballed rollers allow the assembly to accept rail mounting tolerances, so that accurate positioning of the rails is only critical at the fully-up and fully-down positions. During installation, the rails are set up to position the ladle at a slight slope at the top of its travel, so as to align with the slope of the irradiated fuel port. At the bottom, the ladle is horizontal.

The ladle assembly has deliberately been made heavy to reduce the risk of jamming. The ladle itself is semicircular and slotted. It is made of stainless steel, with chrome plating on the wear surfaces to reduce the wear from the sliding fuel bundles. The slots in the ladle coincide with the frame of the conveyor rack to allow the bundles to be transferred onto the rack. The ladle mounts to a frame with shoulder screws permitting the ladle to move horizontally, relative to the frame, against a spring. This ability to move in the direction of fuel loading is provided to guard against possible damage. Should a fuel bundle snag the ladle while being pushed onto it by the FM ram, the ladle will move horizontally until it contacts a stop on the fuel positioning arrangement. This stops the FM ram, thus preventing high ram forces from being transferred to the ladle guide rollers and rails, which would be damaged.

The hoisting units (Item 3) are mounted directly above the elevators, and each consists of a cable wound on a grooved drum, a slack-cable detector, adjustable ladle stops and the ladle upper-position detector. The drum is of painted carbon steel, with nickel plated grooves, and is mounted in two flanged cartridge bearings.

The stainless steel hoisting cable, tested to 3200 kg (7050 lb), connects to the ladle frame through a spring-loaded attachment consisting of a stack of disk springs. The cable has a safety factor of 15.

When the ladle reaches the top of its travel, it contacts a mechanical stop that accurately aligns the ladle with the irradiated fuel port and immediately actuates a switch to cut off power to the hoisting unit motor and brake. Motor inertia compresses the disk spring assembly until the motor comes to rest under the action of the brake. The ladle is then held against the stop by spring compression through the brake.

The slack-cable detector consists of a roller held in contact with the cable by a counterweight. If the cable becomes slack due to the ladle jamming, or contacting the stops at the bottom of the elevator, the detector switch actuates and stops the motor.

The ladle-position detector mounts on the hoisting unit frame. The detector is a limit switch activated by a spring-loaded contoured plunger, which contacts a plate on the cable attachment assembly mounted on the ladle frame.

A retractable stop (Item 8) is mounted at the elevator ladle upper position to provide a positive stop for the fuel bundles as they are discharged onto the ladle. The stop must be retracted prior to the elevator lowering because the elevator moves at an angle of 30° to the vertical and interference would result. The stop assembly consists of a vertically sliding plate, on which mounts the fuel positioning stop, a ladle guide and a mechanical ladle latch. The plate is offset 5° from the vertical to minimize sliding of the stop on the fuel bundle end plate. The plate is retracted by a double-acting pneumatic cylinder powered from the irradiated fuel transfer auxiliaries.

The fuel positioning stop has a spring-loaded plunger, which, when depressed by a fuel bundle, actuates a switch to provide a signal to the control system. The ladle guide provides positive lateral alignment of the ladle with the irradiated fuel port, while the ladle latch limits horizontal movement of the ladle. Limit switches indicate the retracted and extended positions of the end positioning stop. If the stop fails to retract, it is possible to lower the ladle, but the fuel bundles will be displaced laterally.

The ladle drive unit (Item 4) consists of a variable-speed, reversible DC motor with integral brake. It connects to a speed reducer via a torque limiter coupling. For unrestricted access, the drive unit is located in the new fuel room. The output shaft of the speed reducer is coupled to the hoisting unit in the discharge room by a shaft assembly, which penetrates the containment wall. A flexible coupling is located in the discharge room.

The shaft assembly, penetrating the containment wall, consists of a stepped shaft mounted in a housing on two bearing assemblies, a standard cartridge bearing assembly at the discharge room end, and a magnetic-fluid cartridge seal assembly at the new fuel room end. The complete assembly is mounted in an embedment in the containment wall and aligned during installation by eight jacking screws. To prevent radiation streaming, the cavity between the shaft housing and the penetration is filled with lead wool, held in place by welded cover plates.

The magnetic-fluid cartridge seal assembly consists of two ball races and a liquid seal, mounted on a hollow shaft and enclosed in a flanged housing. The entire seal assembly can be removed and replaced as a unit for servicing. The assembly is backed up by a mechanical lid-type seal located behind the standard cartridge bearing at the discharge room end. The two seals provide the double protection necessary for the containment boundary.

A.19.4.3 Discharge Bay/Reception Bay Conveyor

After being lowered to the discharge bay by the elevator ladle, the irradiated fuel bundles are automatically loaded on a rack, which is supported on a cart moving on two conveyors from the discharge bay to the reception bay, via the transfer canal. The essential equipment of both conveyors are a rack and cart, conveyor track, drive unit, sprocket and chain. The following sections give a more detailed description.

A.19.4.3.1 Rack and Cart

The rack is mounted on the cart (Figure A-64, Item 5). The position of the cart is automatically indexed by the drive unit shaft encoder, when it is below the discharge bay conveyor for loading of irradiated fuel bundles. The stainless steel rack weldment consists of four fuel bundle support plates, each having six troughs on the top. Two irradiated fuel bundles are supported end to end in the troughs of the four support plates. The rack, therefore, has a capacity to take 12 fuel bundles at one time.

The stainless steel cart has four pairs of wheels and runs in both directions on the discharge bay/reception bay conveyors. It has two sets of slotted brackets on one side, to engage the pins of each conveyor drive chain, and three pairs of rollers, which engage the two conveyor guide rails at its center. The two slotted brackets are positioned so that, when the cart is driven over the gap in the junction between two conveyors, in either direction, the pins on the first conveyor disengage from one slotted bracket, as the pins go around the first conveyor sprocket. This automatically aligns the other slotted bracket with the pins on the second conveyor chain to drive the cart to its final destination. There are two mechanical stops, one at each end of the cart travel. These stops permit overtravel from the normal end-of-travel positions. A shaft encoder, driven by the shaft of the conveyor drive unit through a reducer, sprockets and a chain, detects the position of the cart when it is on the discharge bay conveyor, thus providing continuous position feedback for indexing and end-of-travel position of the cart.

The cart end-of-travel position on the reception bay conveyor is detected by two cam-operated switches. These switches are also driven by the shaft of the conveyor drive unit through a reducer, sprockets and a chain.

A.19.4.3.2 Conveyor Track

Both conveyor tracks have the same width and mount at the same level. The conveyors have an upper and lower chain support, a rectangular section guide rail that guides the conveyor cart running along the whole length of the track, a drive gearbox and lifting lugs. Both conveyors are set up in line and secured by captive screws and tapered alignment pins on the two bays' floors. Two conveyors are used to simplify removal for maintenance, if required. The length of the discharge bay conveyor (Item 3) is 7.16 m (282 in) long, starting from the bottom of the irradiated fuel elevator in the discharge bay and ending in front of the entrance of the transfer canal. The reception bay conveyor track (Item 4) is 7.19 m (283 in) long, starting from the transfer canal entrance and running to the reception bay.

A.19.4.3.3 Drive Train

Each conveyor chain is driven by a reversible motor with an integral brake, through a speed reducer mounted at the bay walkway level (Item 6). The output shaft of the speed reducer is connected with a pair of bevel gears on the conveyor to drive the conveyor chain. A torque-limiter coupling is mounted on the reducer output shaft to limit the torque that can be applied by the motor.

The cart-position feedback mechanism differs for each conveyor to the extent that the discharge bay conveyor has a continuous position feedback, via a shaft encoder, while the reception bay conveyor end-of-travel positions are indicated only via two cam-operated switches. Both shaft

encoder and cam switches are mounted above the water level, on the respective drive motor assemblies, and are driven through sprockets and a chain.

A.19.4.4 Semi-Automated Irradiated Fuel Handling Equipment

Semi-automated irradiated fuel handling equipment is provided in the reception bay for the automatic transfer of the irradiated fuel bundles from the conveyor cart rack onto the storage trays (Figure A-65).

Empty storage trays are manually positioned, in the reception bay, to receive the bundles from the conveyor. The bundles are transferred from the conveyor cart rack to a storage tray, in pairs, by two J-tools, mounted on a carriage and operated automatically under the control of a microprocessor. The conveyor cart rack normally carries eight bundles, while the storage trays have a capacity of 24 bundles. When a storage tray is full, it is manually removed and replaced by an empty one.

The major component of the equipment is a carriage, which runs on rails at the edge of the bay, and extends over the bay to support the two J-tools, which handle the bundles. Operation of the system is normally initiated by the fuel handling control system control computer, and is then controlled by a microprocessor and related equipment, mounted in a control console located adjacent to the equipment.

System operation is, therefore, integrated with the overall spent-fuel discharge operation. Manual operation of the equipment is possible from switches and pushbuttons on the console, but is only intended for use during maintenance and set-up, or in the event of failure of some part(s) of the system.

The irradiated fuel storage trays are manually positioned to receive the spent fuel bundles from a platform on the carriage. The trays are carried on a storage tray lifting tool, suspended from the reception bay crane. For this operation the carriage is controlled from a pushbutton station on the carriage.

Interlocks are provided to prevent conflict between operation of the bay crane and the semi-automated system equipment.

Canned defected fuel cannot be handled by the semi-automated equipment and must be removed from the conveyor cart using manual tools.

The reception bay semi-automated irradiated fuel handling equipment is described in the following sections.

A.19.4.4.1 General Arrangement

The mechanism consists of a carriage (outer frame), an elevator (inner frame), and two J-tool. assemblies. The cantilevered carriage runs on a rail and a ball-bushing roundway mounted on the edge of the reception bay, parallel to the discharge bay/reception bay conveyor. The elevator moves vertically within the carriage and carries the two J-tools.

Electric power and control signals are transmitted to the carriage through catenary cables secured to junction boxes on the adjacent reception bay wall.

A.19.4.4.2 Carriage

The carriage is a welded carbon-steel structure of rectangular steel tubing. It is mounted on the roundway on two ball bushings, with an underrunning roller engaging the rail. A drive system, consisting of a stepping motor driving a ball lead screw, is mounted adjacent to the roundway. A squared adapter is fitted to the end of the lead screw to allow the carriage to be driven manually for maintenance.

The motor is controlled by an indexer module (motor controller), which permits the selection of two motor-speed ranges, a base speed range and a high speed range. The actual motor speed in each range is adjustable through potentiometers in the control console. The carriage has a total travel of 2596 mm (102.2 in). It is required to stop at 20 positions: one reference position, six positions for the transfer rack, 12 positions for fuel for the storage tray, one free position for the storage tray. Primary carriage position detection is by counting the number of steps of the motor from the reference position, and is performed by the stepping motor indexer module. The number of steps and direction the drive is to be moved are selected by the microprocessor under automatic control, or by the operator, when under manual control. Confirmation of the location of the carriage is provided by a bank of four proximity switches, while accurate positioning is confirmed by a pair of position switches, actuated by a series of cams mounted on the rail adjacent to the proximity switches. There is one cam per carriage stopping position. The reference position cam has 30° slope while all other cams have 15° slope. This minimizes error in indication for the reference position and minimizes wear on the other cams.

A.19.4.4.3 Elevator

The elevator consists of a welded carbon-steel structure of rectangular steel tubing, and rides on two ball bushings on a vertical roundway, and on a pair of cam followers, which engage a vertical guide rail. It has a vertical travel of 930 mm (36.625 in) to accommodate the difference in elevation between the rack and the storage tray. Both the roundway and the guide rail are secured to the carriage outer frame. The elevator is driven by an induction motor, driving a ball lead screw through a gear reducer and a torque-limiter coupling. The torque-limiter coupling is adjusted to slip, if the drive is overloaded, to prevent damage to the system. Position detector switches, mounted on the carriage, indicate elevator position to the control system, and are operated by cams mounted on the elevator. Three positions of the elevator are required: elevator up position to clear the rack, elevator at cart level position, about 63.5 mm (2.5 in) below the top position, and elevator at tray level position, which is the bottom position.

A squared adapter is fitted on the input shaft of the gear reducer to allow the elevator to be driven manually, if necessary, for maintenance.

A.19.4.4.4 J-Tool Assemblies

The purpose of the J-tool assemblies is to lift bundles off the transfer rack and deposit them in the storage tray. The J-tools are mounted on the elevator, which raises the bundles clear of the rack and lowers them to the storage tray elevation.

The bundles on the rack are in pairs, each pair having its two bundles placed end-to-end, touching each other. To place a pair of bundles in the storage tray, it is necessary to separate the

two axially by 32 mm (1.25 in). This is required because the storage tray has a central rib, which, in effect, divides the 24 bundles into two groups of 12.

To accommodate this difference, one J-tool assembly is moved laterally by 32 mm (1.25 in) during the elevator motion, while the other assembly is mounted rigidly on the elevator. The removable assembly is mounted on two ball bushings, running on a horizontal roundway at the bottom of the elevator frame, and is stabilized at the top by two cam followers, that engage a short horizontal rail. The lateral movement is effected by a grooved cam on the elevator. A cam follower on the J-tool engages the groove.

Each tool has a fixed outer thin-wall tube and a sliding inner tube, the full length of the outer tube. A ball spline between the inner and outer tubes maintains their relative orientation. The inner tube has a J-hook attached to its lower end to lift the fuel bundles on its center set of wear pads. To stabilize the bundle, a saddle contoured to suit the two outer sets of wear pads of the fuel bundle, is attached to the outer tube at the lower end. The J-hook has 63.5 mm (2.5 in) of vertical motion, and is driven by a linear actuator mounted on the upper end of the inner tube.

The operation of lifting a bundle off the rack, and placing it in the tray, consists of the following sequences. With the tool open, that is, the J-hook lowered, the tool is moved horizontally by means of carriage motion to align with a bundle on the rack. Then the hook is raised, initially lifting the bundle on its center set of wear pads. When the tool is completely closed, the bundle is stabilized by the saddle mounted on the outer tube. To deposit a bundle on the storage tray, this operation is reversed and the tool is moved horizontally to clear the bundle. The open and closed position of each J-tool are detected by two limit switches mounted near the upper end of the assembly.

The hook and saddle are free to pivot through a limited angle. Pivoting is normally inhibited by a spring mounted at the top of the tool and connected to the hook through a linkage system. The saddle and hook are connected by a pair of rollers, which ensures that each moves in conformity with the other. If the carriage inadvertently overtravels, to cause the hook or fuel to strike the rack or another object, then the system will pivot and operate a switch that will stop all motions.

In addition, the saddle has the capability to travel vertically through a limited distance, and the hook has some excess vertical motion normally resisted by a spring at the lower end of the assembly. If the elevator inadvertently overtravels, to cause the hook or fuel to strike the rack, the spring will be compressed. This will also result in actuation of the switch mentioned in the previous paragraph and will stop all motions.

A.19.4.5 Reception Bay Manual Defected and Irradiated Fuel Handling Equipment

A series of extension tools and accessories (Figure A-66) are provided in the reception bay to facilitate the manual handling of canned defected fuel bundles, and empty and loaded irradiated fuel storage trays. These tools and accessories are also used for the manual handling of loaded and empty discharge bay/reception bay conveyor racks, and irradiated fuel bundles if the semi-automated irradiated fuel handling equipment is out of service for any reason. The tools and accessories are described in the following sections.

A.19.4.5.1 Transfer Rack Handling Tool

This tool (Figure A-64, Item 9) is used in the reception bay to remove loaded transfer racks (Item 8) from the discharge bay/reception bay conveyor cart (Item 5) and place them on single or triple rack stand-offs. In use, it is suspended from the bay crane (Item 11) controlled by an operator on the bay walkway.

The tool consists of a head connected to a U-shaped handle and a lifting eye by a length of pipe. The head consists of two side plates interconnected by three pipes. Two horizontal plates which run along the inside of each side plate engage with plates on the side of each rack and have lugs to ensure positive engagement. Except for the lifting eye, the tool is of stainless steel. The tool weighs approximately 163 kg (360 lb) and its overall length is 6.3 m (248 in).

The tool can carry a fully loaded rack, or a rack containing any number of bundles, including canned bundles, in any position.

The tool is normally stored directly above the end of the conveyor in such a position that, when the conveyor cart reaches the end of the conveyor, the rack is aligned with the tool. As the tool is lifted, the rack is automatically picked up.

When the rack is removed from the conveyor, water coverage is approximately 3.9 m (13 ft) because of the discharge bay/reception bay conveyor elevation. In order to keep the dose rate below the acceptable 6 µSv/h (.6 mrem/h), personnel are required to stay outside a radius of 3 m (10 ft) from directly above the transfer rack while it is being lowered to a safe depth in the bay. Three indicator rings indicate the position of the tool relative to the bay water level.

A.19.4.5.2 Bundle Lifting Tool

This tool (Figure A-64, Item 16) is provided to enable fuel bundles to be transferred, one at a time, from the discharge bay/reception bay conveyor racks, located on the single rack stand-off (Item 12), to the storage tray (Item 15).

Three head-position indicator rings indicate maximum elevation, bundle pick-up from rack elevation (also delivery to storage tray elevation), and traveling elevation to clear the rack and tray.

The tool weighs approximately 35 kg (77 lb) and its overall length is 6.9 m (271.5 in).

A.19.4.5.3 Rack Stand-Offs

A single (Figure A-64, Item 12), and a triple (Item 13), rack stand-off are located on the floor of the reception bay. The single rack stand-off is located in line with the discharge bay/reception bay conveyor, and adjacent to the storage tray loading position, while the triple rack stand-off is placed to one side of the bay.

The single rack stand-off is used when the bundles are being transferred onto a storage tray, while the triple rack stand-off is used to store additional racks.

A.19.4.5.4 Storage Tray Support Table

Empty storage trays (Figure A-64, Item 22) are supported in the reception bay on two tables (Item 14), 2.3 m (7.5 ft) high in the 7.6 m (25 ft) deep part of the bay.

The tables support the trays at a height convenient for pickup by the reception bay tray handling tool (Item 20). Tapered locating pins are provided on the top of the tables and engage with mating slots in the trays.

A.19.4.5.5 Tool for Lowering Empty Trays

This tool is provided to lower up to seven empty storage trays into the reception bay. It consists of a four-leg frame with a latch mechanism at the bottom of each leg. The tool is lowered over the stacks of empty storage trays, using the bay crane, until the latch mechanism is in line with the lowest tray of the stack to be picked up. The latches are then manually engaged and the tool is lifted with the trays. The tool is lowered into the bay with the trays. When the weight of the trays is off the tool, it is lowered until lever-operated cams disengage the latches. The tool can be removed from the bay and stored in the laydown area next to the reception bay, after use.

A.19.4.5.6 Storage Tray Lifting Tool

The storage tray lifting tool (Figure A-64, Item 20) is used to move storage trays after they have been lowered into the reception bay. The tool weighs approximately 136 kg (300 lb) and its overall length is 680 cm (268 in). Two indicator rings indicate the upper and lower storage tray positions of the tool head, relative to the bay water level.

A.19.4.5.7 Storage Tray Conveyor

The manually driven storage tray conveyor (Figure A-64, Item 18) has three superimposed frames for telescopic extension. The fixed bottom-frame is mounted on the floor by supports and captive screws in the reception bay, at one end, while the other end extends into a rectangular opening in the wall between the reception bay and storage bay. The bottom frame is essentially a weldment of stainless steel pipes and brackets. Its two guide rails, which run the whole length of the frame, provide a support and guide way for the center frame. The movable center frame consists of stainless steel pipes, support pads, bogie assembly, guide rails, stop pad and a flow obstruction plate. The center frame has a travel of 1.3 m (51 in), by running its rollers in the guide rails of the bottom frame. The flow obstruction plate, attached with two lifting lugs, becomes a seal to minimize the water flow between the storage bay and the reception bay, when the storage tray conveyor is fully retracted. The top frame provides a support for the fully loaded storage tray. It has a travel distance of 2.05 m (80.5 in), by running its rollers in the guide rails of the center frame. After the top frame hits the center frame stop, the former will pick up the latter, moving together. As soon as the center frame advances, it moves the flow obstruction assembly away from the storage bay wall. The two frames will cease their movement by hitting the bottom frame stop. With the spent fuel storage tray now clear of the storage bay wall, it can be picked up by the storage bay tray lifting tool, via the manbridge.

The storage tray conveyor is manually operated from a handwheel, located on the bay walkway. A drive shaft (Item 19) mounts vertically through the reactor hall floor and connects to the underwater conveyor drive gearbox in the reception bay. A drive sprocket, attached to the horizontal gearbox shaft, engages a single-strand roller chain, which is held up by idler sprockets and tightened by a chain tensioner. No position feedback equipment is associated with the storage tray conveyor. It is driven manually until it stalls in the fully extended, or retracted, position.

A.19.4.6 Storage Bay Equipment and Tools

A.19.4.6.1 Storage Bay Manbridge

The storage bay manbridge (Figure A-2, Item 24) is an above-water crane-girder structure that consists of a monorail crane, an under-slung walkway, and a two-ton hoist mounted on an electrically driven trolley. The monorail crane is supported 16 m (52.5 ft) apart across the bay, by wheels running on runways and rails. The under-slung walkway, which is rigidly attached to the monorail crane, provides safe access for operating personnel to handle irradiated fuel or other radioactive components. It spans approximately 12 m (40 ft) and runs the full length (approximately 22.5 m (74 ft)) of the storage bay. It is covered with non-slip checker plates on its decking floor and has kick plates, and handrails along both sides of the walkway. Facilities for extra lighting are provided underneath the walkway decking floor. The 1800 kg (2 ton) hoist has a clear lift of 12 m (40 ft). Whenever the spent fuel storage tray is hooked to the hoist, the operator must keep the spent fuel bundles immersed in the bay water, to a minimum depth of 4.10 m (161.5 in), at all times, to ensure minimal radiation levels at the bay water surface. The trolley, running along the monorail crane, supports the 1800 kg (2 ton) hoist and the bridge pendant control station.

The travel speed of 76 ~ 102 mm/s (3 ~ 4 in/s) is the same for both monorail crane and trolley. The hoist has two travel speeds, a fast speed of 40 ~ 81 mm/s (1.5 ~ 3.2 in/s), and a low speed of one third of the fast speed.

A.19.4.6.2 Storage Trays

The overall size of the storage trays is 1.08 m (42.5 in) long x 1.52 m (59.8 in) wide x 140 mm (5.5 in) high. Each storage tray can hold 24 fuel bundles in two rows of 12 each.

The trays are of stainless steel welded construction, with contoured cradle strips welded to support the fuel bundles. Two lifting plates are provided in each end rail and correspond to the pins on the tray lifting tools. Cut-outs are provided in the top section of the end rails and, together with an angled guide strip, guide the lifting tool pins into engagement with the storage tray lifting plates. Each tray is provided with two tapered locating pins and two slots, the pins engaging with the slots of the next-higher tray in the stack.

The trays are identified by a letter and three numbers, cut from sheet stainless steel, and located one in each upper corner.

The trays are normally stacked no more than 19 high. This provides a minimum water shielding of 4.42 m (14.5 ft), over the bundles on the top tray, with a minimum shielding of 4.10 m (13.46 ft) of water, above a tray in transit, passing over the top fuel tray.

A.19.4.6.3 Storage Tray Supports

Storage tray supports (Figure A-2, Item 25) are provided in the reception bay, and in the main storage bay, to support the stacks of trays. The supports ensure the bay floor loading is not exceeded, provide the necessary clearance between the first row of fuel bundles and the hay floor, and permit the free flow of water around the trays.

Each support consists of a diagonally braced, stainless steel frame, supported on four raised pads. Two tapered locating pins locate the first tray in the stack.

A.19.4.6.4 Storage Tray Lifting Tool

This tool is similar to the storage tray lifting tool used in the reception bay, except for the length of the tool and the orientation of the handle to the head. An eye is provided at the top of the handle for attaching the tool to the hoist on the bay manbridge. The head consists of two plates, interconnected by three lengths of pipe, and is connected to the handle by a vertical pipe. Two pins are mounted in each plate to engage with lifting plates on the ends of the spent fuel trays. The entire assembly, except for the lifting eye, is of stainless steel.

The tool weighs approximately 163 kg (360 lb) and is designed to carry one fuel storage tray, carrying any number of fuel bundles up to the maximum of 24. There are no lifting limitations on the location of fuel bundles on a partially loaded tray.

The tool is stored standing on the bay floor with the handle secured to the bay hand rail,

A.19.4.7 Defected Fuel Handling Equipment in Discharge Bay

Defected fuel bundles are identified, before being discharged from the FM, through fuel channel Delayed Neutron (DN) monitoring, via a sample station. The DN count rate will decrease sharply when a defected bundle leaves the channel flow. The bundle or bundles are then recorded via the FM magazine rotor position. When discharged from the FM, they are lowered on the elevator, in the same way as normal fuel bundles. However, in the case of a defected fuel bundle, the conveyor rack is indexed two positions, and the defected bundle is removed from the rack and inserted into the carousel, using a fuel handling tool suspended from the discharge bay monorail hoist. The carousel is then indexed to position the bundle under the carousel canopy. The defected bundles remain in the carousel until they have decayed sufficiently to permit canning, between four and eight weeks. After canning, the bundles are transferred, on the conveyor, to the reception bay for storage in the defected fuel storage bay in the service building. The description of tools and. equipment required for defected fuel handling follows.

A.19.4.7.1 Carousel

A carousel (Figure A-67, Item 1) is located in the discharge bay to provide temporary storage for defected fuel, for a decay period of four to eight weeks after the bundle has been discharged from a FM. It can be indexed to support a total of 12 defected fuel bundles and is designed to handle 30 bundles per year, 15 bundles per month, eight bundles per week, four bundles per day.

The rate for each period is subject to the limits for the next higher period, as it would be impossible for example, to handle four bundles per day for one week.

The carousel base is a weldment of angles bolted onto the bay floor. The outside walls consist of an octagonal lower wrapper, open at the bottom, with a removable conical hood of octagonal shape covering the top of the tray. The tray is made up of 12 sides, with each side holding one defected bundle. A ventilation pipe connects from the hood to the negative side of the irradiated fuel ventilation system, to purge active gases from the carousel. The hood has lifting eyes for access to the carousel for maintenance. A bundle handling tool places the defected fuel into the

tray, through an opening on the top of the hood. The indexing unit (Item 2) is operated manually, from the bay walkway level, via a handle and pipe penetrating the reactor hall floor.

A.19.4.7.2 Defected Fuel Can

Each defected fuel bundle is inserted into a stainless steel can (Figure A-67, Item 13), after a necessary decay period in the carousel. The can has one open end for the bundle insertion, while the other end is blanked and punched with a small hole to prevent the internal can pressure from building up, during and after canning operations. The can is sealed by a lid, after the defected fuel bundle has been pushed in it. The empty cans and lids are lowered into the discharge bay by one of the bay elevator ladles.

A.19.4.7.3 Canning Device

The canning device consists of a can storage rack (Figure A-67, Item 12), a can support (Item 9), a fuel bundle trough (Item 11), and a bundle transfer ram (Item 14). All these components are mounted on the canning device support frame (Item 15) under the discharge bay water. The can support, which has a stand frame, a guide plate and a blanked end plate, holds the can in a proper position during canning operations. After temporary storage in the carousel, a defected fuel bundle is placed into the canning trough, using a bundle handling tool (Item 4). The bundle transfer ram is supported at the rear by a bearing, which runs in a tube, and at the front by a rectangular bearing. The ram head is slotted to accept the spigots on the can lids. The bundle transfer ram, which is mounted 1.24 m (48.75 in) above the bay floor, is driven by a manually operated drive unit. To clear the irradiated fuel elevator spray-cooling header, the shaft of the drive unit has been cut into two pieces. The drive mechanism (Item 17), consists of a crank handle and a torque wrench on a crankshaft, mounted above the bay walkway level. The drive shaft (Item 16), whose top end is embedded in the reactor hall floor and bottom end has a pinion, meshes with the rack of the bundle transfer ram in the bay water, thus advancing or retracting the ram. The crankshaft and the drive shaft are connected to each other by a set of sprocket gears and a single roller chain in a ram drive base on the bay walkway level. The full travel of the bundle transfer ram is 620 mm (24.5 in) limited by positive stops in both directions.

A.19.4.7.4 Bundle Lifting Tool

The bundle lifting tool (Figure A-67, Item 4) is provided to enable defected fuel bundles to be lifted from the discharge bay/reception bay conveyor rack into the defected fuel storage carousel, and from the carousel to the defected fuel canning equipment.

The tool consists of a length of pipe with a U-bolt at the top, and an outrigger and clamping jaws at the bottom. The jaws are operated by a pivoting handle at the top of the tool.

In operation, the bay crane is connected to the U-bolt and the tool is lowered, with the handle in the open position, until it rests on the bundle. When the tool is in position, the handle is rotated 180° to clamp the jaws around the bundle. The outrigger holds the bundle in a horizontal position. The jaw linkage geometry is adjusted to prevent the jaws applying unnecessary pressure to the bundle.

Two indicator rings, on the tool outer tube, indicate the permitted upper and lower positions of the tool, relative to the bay water level, when carrying a defected fuel bundle.

The tool weighs approximately 31 kg (68 lb) and is similar to the bundle lifting tool in the reception bay, except for length and the number of indicator rings on the outer tube.

A.19.4.7.5 Lid Rack Handling Tool

Racks of defected fuel can lids (Figure A-67, Item 10), are lowered into the bay on an elevating table, mounted on one of the discharge elevator ladles. The lid storage rack handling tool (Item 5) is used to transfer full racks from the ladle onto the defected fuel canning mechanism, and empty racks back to the elevating table. The tool weighs approximately 3.6 kg (8 lb).

A.19.4.7.6 Elevating Table

The elevating table (Figure A-67, Item 18) is a rectangular, carbon-steel table, which can be hooked onto either of the elevator ladles. A rack of can lids can then be loaded onto the table and lowered into the bay on the elevator.

A.19.4.7.7 Can Handling Tool

The can handling tool, or 'J-tool' (Figure A-67, Item 7), is used to move empty defected fuel cans between the elevator ladle and the can storage rack, and between the rack and the can loading trough, and to move full cans between the trough, and conveyor rack. A similar handling tool is used on the reception bay to transfer full cans from the conveyor cart to the carrier of the defected fuel transfer mechanism.

The tool consists of a handle connected to a double lifting hook by a length of pipe. The tool is of stainless steel except for the lifting eye. In use, it is suspended from the bay monorail. When not in use, it is stored in the bay, suspended from a bracket at the walkway level.

It is fitted with a series of five indicator rings, which indicate the position of the hooks relative to the water level.

A.19.4.7.8 Lid Handling Tool

The lid handling tool (Figure A-67, Item 6), picks up can lids from the storage rack and places them in position in the defected fuel canning equipment ram.

The tool consists of a length of pipe, with a hook at the top and a contoured fork at the bottom. A spigot on the can lids engages with the fork, the lid being held in engagement with the fork by a hook. The hook is operated through a toggle clamp at the top of the tool and allows the operator to lock the lid to the tool, or release it, as required.

The tool weighs approximately 108 kN (24 lb). A single indicator ring is provided to indicate the position of the hook relative to the water level.

A.19.4.8 Defected Fuel Storage Bay Handling Equipment

The defected fuel bay (Figure A-68, Item 11) is used to store canned defected fuel. The bay is fully enclosed to prevent possible spread of contamination from defected fuel. A separate 900 kg (1 ton) crane (Item 13) facilitates handling of extension tools to manipulate defected fuel cans and storage trays.

After the fuel is canned in the discharge bay, the canned fuel is transferred to the reception bay on the discharge/reception bay conveyor. The reception bay can handling tool (Item 2) is used to transfer the canned fuel from the conveyor rack on to the carrier of a defected fuel transfer mechanism (Item 6). This transfer mechanism is located underwater in the defected fuel bay and extends through a circular port into the reception bay. The port is sealed when the mechanism is not in use by a manually operated isolation mechanism in the reception bay (Items 3 and 4).

Canned defected fuel is stored in the defected fuel bay on storage trays, each stack of trays being supported on a tray support (Item 9). The supports limit the bay floor loading and provide the required clearance between the bottom row of canned bundles and the bay floor. Each tray contains 10 canned fuel bundles and the trays can be stacked 10 high.

The individual canned fuel bundles are moved inside the defected fuel bay using the can lifting tool (Item 2) suspended from the crane which spans the bay. Trays of fuel are moved using a tray handling tool (Item 12), also suspended from the crane. For operator convenience, the tray handling tool is designed to permit the trays to be stacked only five high. The ceiling restricts stacking any higher. When all stacks are five trays high, the tool must be shortened to permit higher stacking.

Space is available in the bay for the installation of a defected fuel bundle examination facility, if required.

Underwater lighting is provided by portable underwater lights connected to receptacles around the bay.

Defected Fuel Storage Bay Isolation Mechanism

The bay isolation mechanism (Item 3) consists of a seal plate, operated from a handwheel (Item 4) at the bay walkway level, which seals against a sealing face on a mounting base, which forms an extension of the port.

The mounting base consists of a length of pipe, cut at an angle of 45° and welded to a base plate, with a flange to form the sealing surface. The operating mechanism consists of a stainless steel threaded shaft, running in an Ampco 18 shaft guide. A shaft guide is bolted to the mounting base and the shaft is connected to the handwheel. The lower end of the shaft is connected to the sealing plate through a clevis and a fork, and a seal plate lever. The seal plate has limited freedom about the lever, to ensure alignment with the sealing surface. The seal is made with an O' ring in the sealing plate.

The handwheel and the short section of the drive shaft, which extends above the walkway, is normally removed to prevent obstructing the walkway, except when the mechanism is being operated, and is stored on a bracket on the adjacent walkway handrails. The drive shaft is flush with the walkway, when the sealing plate is closed.

The operating mechanism is secured to the mounting base by tapered alignment pins and captive screws to permit removal for servicing. The drive shaft is connected to the operating mechanism and to the handwheel by hexagonal joints, which permit the handwheel and the shaft to be easily removed.

Defected Fuel Transfer Mechanism

The transfer mechanism consists of a carrier, which runs on tracks machined into two slide rails. The carrier is driven by a roller chain from a bevel gearbox, via a vertical shaft from a handwheel at the bay walkway level (Item 7). The carrier is essentially a cantilevered tube that extends into the reception bay to accept a canned fuel bundle when the carrier is at the reception bay end of its travel. With the carrier retracted into the defected fuel bay, the port valve is normally closed to prevent flow between the two bays.

The transfer mechanism is mounted on a support frame in the defected fuel bay. The frame is, in turn, secured by tapered locating pins and captive screws to two plates fixed to embedments in the bay floor. This facilitates installation and removal of the mechanism. A captive screw is provided on the mechanism to allow the carrier to be locked in the retracted position, to prevent carrier movement when the assembly is being moved during servicing.

The handwheel and vertical drive shaft can be lifted out of the transfer mechanism gearbox for servicing, the vertical shaft being coupled to the gearbox by a key fixed to the bore of the gearbox input shaft.

Defected Fuel Bay Tools and Accessories

The can handling tool in the defected fuel bay is identical to the one in the reception bay. The tool consists of a handle connected to a double lifting hook by a length of pipe. The tool is of stainless steel, except for the lifting eye. When not in use, the tools are stored in the respective bays, suspended from brackets at the walkway level. Two indicator rings on the tools indicate the vertical position of the tool hooks relative to the water surface. The tool weighs approximately 25 kg (55 lb).

The storage tray lifting tool is similar in construction to the reception bay main storage bay tray lifting tools.

The defected canned fuel storage trays are similar to the main storage bay trays, but contain only 10 canned fuel bundles in a single row.

The defected canned fuel storage tray supports are similar to the main storage bay tray supports and perform the same functions.

Irradiated Fuel Auxiliaries

The irradiated fuel auxiliaries comprise a series of systems to provide air and water for the irradiated fuel discharge mechanisms. Auxiliary systems are provided for: standby cooling, D_2O leak collection, fuel stop actuating, port relief, FM overflow detection, and port valve actuating. Duplicate systems are provided for both FM sides, except for the standby cooling system pump.

The station instrument air supply system provides air pressure at a nominal pressure of 690 kPa (100 psi) for purging the D_2O leak collection system, the port ball valve, and the fuel stop actuators. A separate regulator provides 35 kPa (5 psi) for purging the D_2O port. Isolating valves are installed in all lines passing through the wall between the new fuel room and the irradiated fuel discharge room. They can be closed during servicing of any irradiated fuel equipment to maintain the reactor containment integrity.

The irradiated fuel is transferred in air, from the time it leaves the D_2O in the FM head until it is submerged in the discharge bay. If, due to a delay, the irradiated fuel remains in air longer than a predetermined time, an alarm is provided to the operator. He then selects the standby cooling system 'on' to supply cooling water to the exposed fuel bundles to prevent bundle overheating, and possible subsequent bundle failure.

The water supply is provided by a single stage centrifugal electrically driven pump, mounted vertically in the discharge bay with the pump submerged. It provides a flow of 10 kg/s (0.68 slug/s), at a pressure of 330 kPa (48 psi).

Two pneumatically operated globe valves control the flow of cooling water to either the port or elevator or both, depending on where the fuel bundles are located. If the fuel bundles are struck in the port, and the outer ball valve can be closed, the level of the FM D_2O can be raised to flood the port with D_2O and cool the fuel. The standby cooling system would not be used.

The standby cooling system has three modes of operation:

i) If the fuel becomes stuck in the port such that the outer ball valve cannot be closed, the port cooling portion of the system would be used. To prevent downgrading of the head D_2O, the guide sleeve would be removed and the snout plug installed to isolate the FM from the port. The cooling water then flows over the stuck fuel and discharges into the bay.

ii) If the fuel bundles are stuck with one bundle on the ladle and one in the port valve, both the elevator ladle and the port cooling systems must be operated. As in (i), the FM should be isolated from the port.

iii) If both bundles are on the elevator the outer ball valve should be closed and the elevator cooling system operated. The outer ball valve is closed to prevent downgrading of the FM D_2O.

During FM operation on the irradiated fuel port, the FM and port are filled with D_2O and pressurized. Some D_2O will leak past the inner ball valve seal into the cavity between the inner and outer valves. Prior to the opening of the ball valves for fuel transfer, the water level in the FM is reduced below snout level.

Whenever the FM is connected to the port and the FM D_2O level is being raised or lowered, or the FM is full, the D_2O leak collection system is in operation. A pneumatically operated drain valve connects to the cavity between the port valves. It opens, through a solenoid valve, to drain any D_2O into a tank in the FM D_2O system. At the same time, the cavity is supplied with air at a nominal pressure of 35 kPa (5 psi), through a solenoid valve, to assist in clearing any D_2O from the cavity. Two check valves, mounted in series in the line between the solenoid valve and the port, provide double protection against loss of D_2O, when the port is pressurized by a FM. A leak detector, mounted between the valves, detects leakage and energizes a warning lamp on the control console, so that corrective action may be taken.

A port relief valve connects to the port and is set to relieve at 3.5 MPa (500 psi), with a flow of up to 4 L/s (63 U.S. gal/min), to prevent excess pressure being applied to the port and port ball valves. D_2O discharged from the valve is returned to a tank in the FM D_2O.

A D_2O collection container is located below the discharge end of the port and connects to the port. The container drains into the discharge bay through a removable orifice. If the FM level

control system fails and the flow of D_2O from the FM into the container exceeds the flow through the orifice, a liquid level detector probe in the container actuates a transmitter. A lamp on the control console energizes, providing a signal for corrective action to be taken. This detector also operates if the standby cooling system flow to the port is operated with the port ball valves open.

The port ball valves are operated by pneumatic actuators, the air supply to each actuator being controlled by a four-way, two-position, double-solenoid valve. A hand valve connects across the two lines to each actuator and is normally closed. If the ball valves are to be operated manually, the hand valves are opened to equalize the pressure across the ball valve actuators.

The fuel stop can be raised from its stop position by a double-acting pneumatic ram, controlled by a four-way two-position, single-solenoid valve. When energized, the ram raises the stop to allow the ladle to be lowered. The stop is held in the raised position until the ladle has been returned to the fuel discharge port, at which time the solenoid valve is de-energized to allow the fuel stop to be lowered, ready for the ladle to receive the next fuel bundles.

A.20 Irradiated Fuel Dry Storage

A.20.1 Introduction

When the original irradiated fuel storage bay becomes full, auxiliary storage bays are provided at some nuclear power stations. However, with the need to place used fuel from decommissioned nuclear power plants in interim dry storage, a viable process has been developed and is being implemented at some CANDU 6 stations.

It has been demonstrated that used CANDU fuel can be placed in dry storage within five years after discharge from a reactor. The future size of the storage bays on CANDU stations now can be reduced to as little as six years capacity, including capacity for a full core load.

The process that is used for irradiated fuel dry storage in canisters was evolved from the WNRE, Gentilly-1 and Douglas Point projects and is well established. The storage element is the basket (Figure A-69) which stores fuel vertically, thus minimizing the structural needs. For the CANDU 6 system 60 bundles are stored per basket. The baskets are stored 9 high, one on top of each other inside the concrete canister (Figure A-70).

The fuel is stored horizontally in the storage fuel bay, in trays of 24 bundles. Twelve of the 24 bundles are placed in the vertical position, transferred one by one into the basket and followed by the 12 additional bundles. The fuel transfer to the basket is made with a manual tool. Once filled, a basket cover is placed over the basket base and is transferred to the shielded workstation for welding of the cover.

The fuel is then dried with hot air circulation through the basket. The basket cover is subsequently welded to the basket bottom and to the top of the basket center post to seal the basket and form a rigid structure. The welded baskets are lifted into a shielded transfer flask. The flask is moved on a transporter to the concrete canister. The flask is lowered on the canister loading platform, the canister plug is removed and the flask moved over the canister. The basket is lowered into the canister and the flask is returned to the shielded workstation where the basket transfer cycle is repeated.

The process is capable of handling a quantity of 6,000 bundles per year from the plant. As a guide, the manual fuel handling equipment will be able to handle the normal loading of a quantity of approximately 20 baskets per week for one shift.

The dry storage of irradiated fuel is covered by CSA N292.3 "Concrete Canister Storage of Used Fuel". It covers the requirements, codes and standards which are generic to dry irradiated fuel storage in canisters, including seismic conditions.

"Pool Storage of Irradiated CANDU Fuel" is referenced in the CSA N292.3 standard and will apply to new structures implemented in the bay for basket loading and temporary storage in the bay.

When storage of irradiated fuel is considered, the following five licensing concerns must be satisfactorily addressed:

i) adequate fuel cooling;
ii) effective containment of radioactive release in the event of fuel failure;
iii) adequate radiation shielding;
iv) adequate physical security and ease of safeguards verification;
v) long term structural integrity against natural events.

A.20.2 System Description

A.20.2.1 Basket Loading

Manipulation of the individual fuel bundles takes place underwater, using manual tools and hoists (Figures A-71 and A-72). The empty fuel basket is first placed on the underwater work table. The fuel bundles from a tray are tilted from the horizontal to the vertical position, twelve at a time. Using the bundle lifting tool, the bundles are removed from the tray one-by-one, and loaded into the fuel basket.

After the basket has been filled to capacity and the bundles in it noted for IAEA safeguards purposes, the cover is placed over the basket and the basket is ready for removal from the bay.

A.20.2.2 Basket Drying and Welding

These operations are performed in a shielded welding station (Figure A-73). The basket is lifted through the shielded loading chute into the shielded welding station and placed on the turntable. It is spray washed, moved into the drying position, and both it and the fuel bundles inside it are dried by means of a hot air blast. The basket is then moved to the welding area in the shielded welding station and the cover seal-welded to the baseplate and the center post.

A.20.2.3 Flask Transportation

After the seal-welding has been verified, the fuel basket is hoisted out of the shielded work station, into the fuel transport flask, which has been in place over the opening in the top of the shielded work station while the basket has been in the shielded work station (Figure A-73). The loaded flask, with its door closed and locked, is transferred to the trailer. The trailer is pulled out of the building and towed for a short distance to the Waste Management Area, where the Canister Site is located.

A.20.2.4 Concrete Canister Loading

At the Canister Site the flask is brought under the gantry crane, and lifted onto the loading platform using a hoist. An auxiliary hoist is used to remove the canister plug (Figure A-70). As the plug is removed, the flask is positioned over the canister opening to maintain shielding.

The fuel basket inside the flask is then hoisted just enough to take its weight off of the gate. The door is opened, and the basket lowered into the concrete canister, using the flask winch. The canister plug is put back into place and the flask lowered back onto the trailer, to be returned to the station for the next iteration.

When the canister contains nine baskets, the canister plug liner is seal-welded to the canister liner. An IAEA seal is affixed.

A.20.3 Equipment Description

A.20.3.1 Fuel Basket

The fuel basket (Figure A-69) is approximately 1050 mm (41 in) outside diameter and 550 mm (22 in) in height. Type 304L stainless steel is used in its construction to assure compatibility with bay water and high resistance to any potential corrosion.

Each basket has a capacity of 60 bundles, arranged in four rings. The bundles are held in position by means of two retaining plates. A 102 mm (4 in), schedule 80, stainless steel pipe, located along the axis of the basket, serves to uniformly transfer the weight of the 60 bundles (which rest on the baseplate) up to the ring at the top into which the grapple engages during the lifting operation.

A.20.3.2 The Fuel Bundle Tilter

The fuel bundle tilter (Figures A-71, A-72) will reside permanently on the underwater work table, which is at an elevation of 2.75 m (9 ft) above the bottom of the irradiated fuel bay. Its function is to reorient the fuel bundles from the horizontal to the vertical position. A grapple is used to transfer the bundles underwater, one-at-a-time, from the trays on which they have been stored to the fuel baskets.

The undercarriage arrangement tilts the inner row of 12 bundles, in unison, so that the axis of the respective bundles is vertical and, hence, amenable to grapple attachment. After these 12 bundles have been removed and transferred to the basket which is positioned alongside, the tray is lifted to just above the fuel bundle tilter, rotated 180°, and lowered back onto it. The remaining row of bundles now rests over the tilter's undercarriage arrangement and these bundles can now be tilted, removed from the tray, and placed into the basket.

The tilter is designed to accommodate the standard CANDU 6 fuel tray design, which is a two-row fuel bundle tray arrangement. The previous fuel bundle tilters were designed and fabricated to accommodate a single-row tray arrangement.

A.20.3.3 Shielded Welding Station

The shielded welding station that has been designed for the CANDU 6 fuel storage program is quite similar to the design employed during several earlier CANDU spent fuel dry storage programs.

There are two rails inside the welding station (Figure A-73) running along the length of the station, on the base section. The turntable that rests on these rails is moved by a drive mechanism, transporting the basket so that the following activities take place:

- the washing and draining of the basket,
- the air drying of its interior (and the fuel bundles), and
- the semi-automatic seal-welding.

The shielded work station has two lead-glass windows in the walls for visual observation, and two TV cameras inside for monitoring of the seal-welding operation.

The main departure from previous projects is related to the irradiated fuel bay layout. A crane will be added over the shielded work station and a new building extension constructed to facilitate the flask transfer to the transporter. The station will be constructed of sections assembled into a unit, with its base section anchored to the bay wall concrete in the region of the wall where the transfer canal was to have been located. The walls and ceiling sections of the shielded work station will be fabricated from 10 mm (0.40 in) steel plate on the inside and outside, with 190 mm (7.5 in) of lead in between to provide sufficient shielding so that the radiation field at the exterior is restricted to less than 25 μSv/h (2.5 mrem/h) on contact.

A.20.3.4 Fuel Transport Flask

The fuel transport flask that will be used for the CANDU 6 is different in design from the design used in previous CANDU programs, in three significant areas:

- the flask will be circular in cross-sectional configuration (not square), and
- a sliding bottom door will be employed, in lieu of the hinged bottom “shutters” used in the past, and
- its internal diameter can house a larger basket.

The manual hoist used for lifting and lowering the basket (into and out of the flask) uses chain rather than cable, to prevent basket rotation while these activities are underway.

The shielding consists of 190 mm (7.5 in) of lead between inside and outside steel plate, 9.5 mm (0.37 in) in thickness. Radiation fields on contact with the outside surface of the fuel transfer flask are expected to be less than 25 μSv (2.5 mrem).

A.20.3.5 Canister

The canister (Figure A-70) is a cylindrical, reinforced concrete structure with an internal liner of 9.5 mm (3/8 inch) standard weight carbon steel pipe. The canister is approximately 3 m (10 ft) in diameter, 6.2 m (20 ft) tall and the liner is 1.12 m (44 in) in diameter. The canister provides a combined shielding of 0.94 m (37 in) of concrete and 9.5 mm (0.37 in) of steel. The opening at the top is circular and sized to accept the canister plug and adapt to the flask. The carbon steel

lined canister plug is seal-welded to the liner at the completion of the loading operation, and the IAEA safeguard seals are installed.

The CANDU 6 concrete canister design is similar to that in use at Douglas Point and is an adaptation of the original WNRE design. The canisters are designed for deadweight, thermal, wind and tornado driven missiles and seismic loads. They are supported on a common reinforced concrete foundation that rests on a deep bed of crushed stone.

The concrete mix is designed to provide a 28-day design compressive strength of 27.6 MPa (4000 psi). The mix incorporates 5% air entrainment to provide resistance to alternate freezing and thawing cycles.

Two main rebar cages serve to reinforce the canister. One is located alongside the canister liner; the other envelops the canister periphery. Supplementary rebar is also present along the plug/liner interface and between the canister and the base. The rebar at the base anchors the canister to the foundation pad.

The conceptual design and licensing of these concrete canisters took place in the early seventies and actual demonstration testing in 1975-1976. Quarterly surveillance inspections have been carried out during the ensuing years and no significant deterioration has been observed to date.

A.20.3.6 Canister Site Description

The canisters will be arranged in two arrays of 150 each (i.e., 30 rows of five canisters per row). The two arrays will be separated by a road, which will serve to provide access to both of the arrays.

The canisters will be sequentially built, at a rate of 10 per year. About nine are needed for an 80% capacity factor.

Ten of these canisters will be filled during the first year. During each subsequent year ten canisters will be constructed and ten canisters filled. The loading schedule will be such that the canisters in the row being loaded and canisters in the row being constructed will be separated by two rows of empty canisters. Construction of the canisters in the second array will commence in the fifteenth year.

The canister site will require an area of about 55 m (180 ft) by 130 m (430 ft). The site fence will enclose an area of about 80 m (260 ft) by 155 m (510 ft).

A.21 Bibliography

1. “CANDU 600” Atomic Energy of Canada Limited, Public Affairs Office, Sheridan Park, PP-26, September 1979.
2. J.C. Dunlop (AECL) and S. Alikhan (NBEPC), ‘The Proposed Spent Fuel Dry Storage Facilities at Point Lepreau Nuclear Generating Station”, CNA 10th Annual Conference, Ottawa, 1989 June.

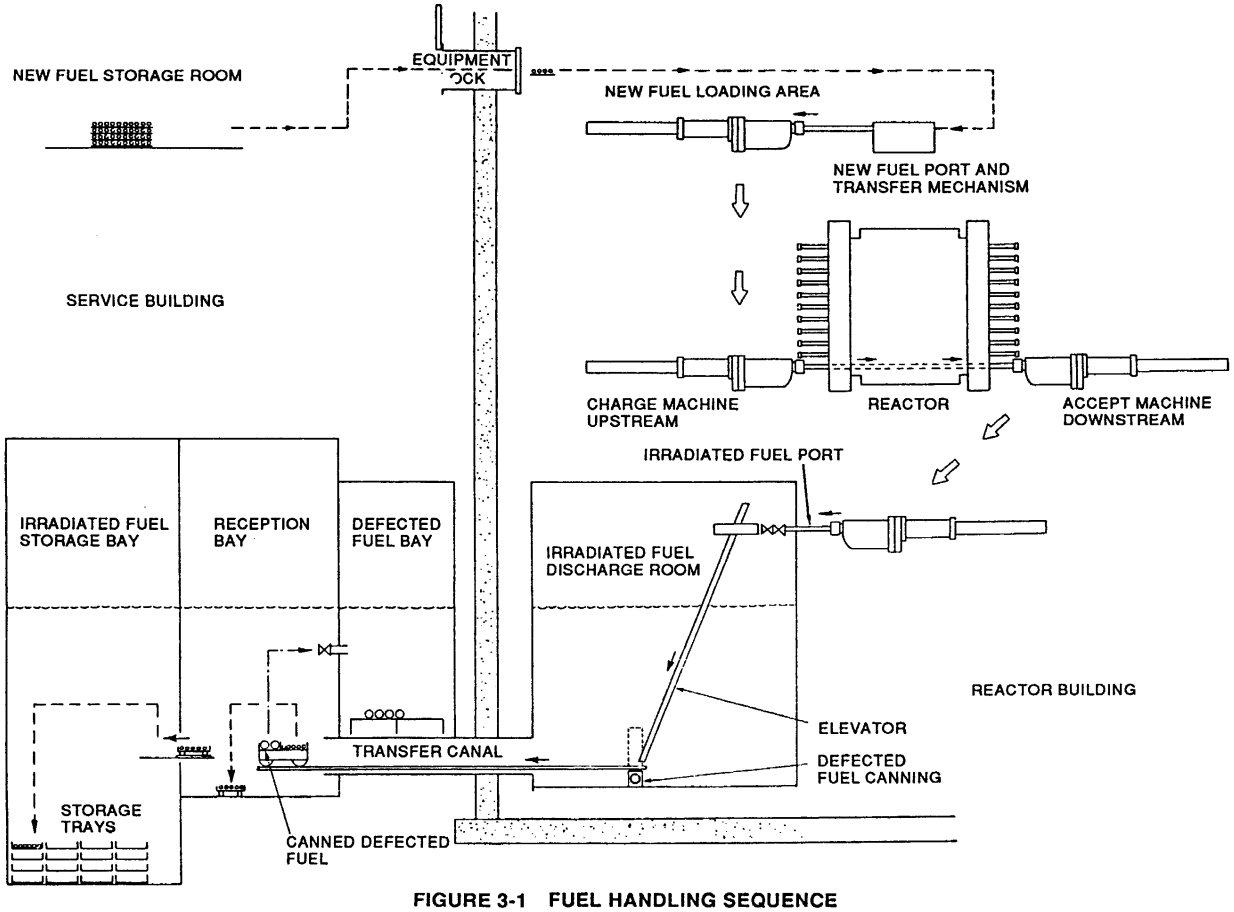

Figure A-1 Fuel Handling Sequence

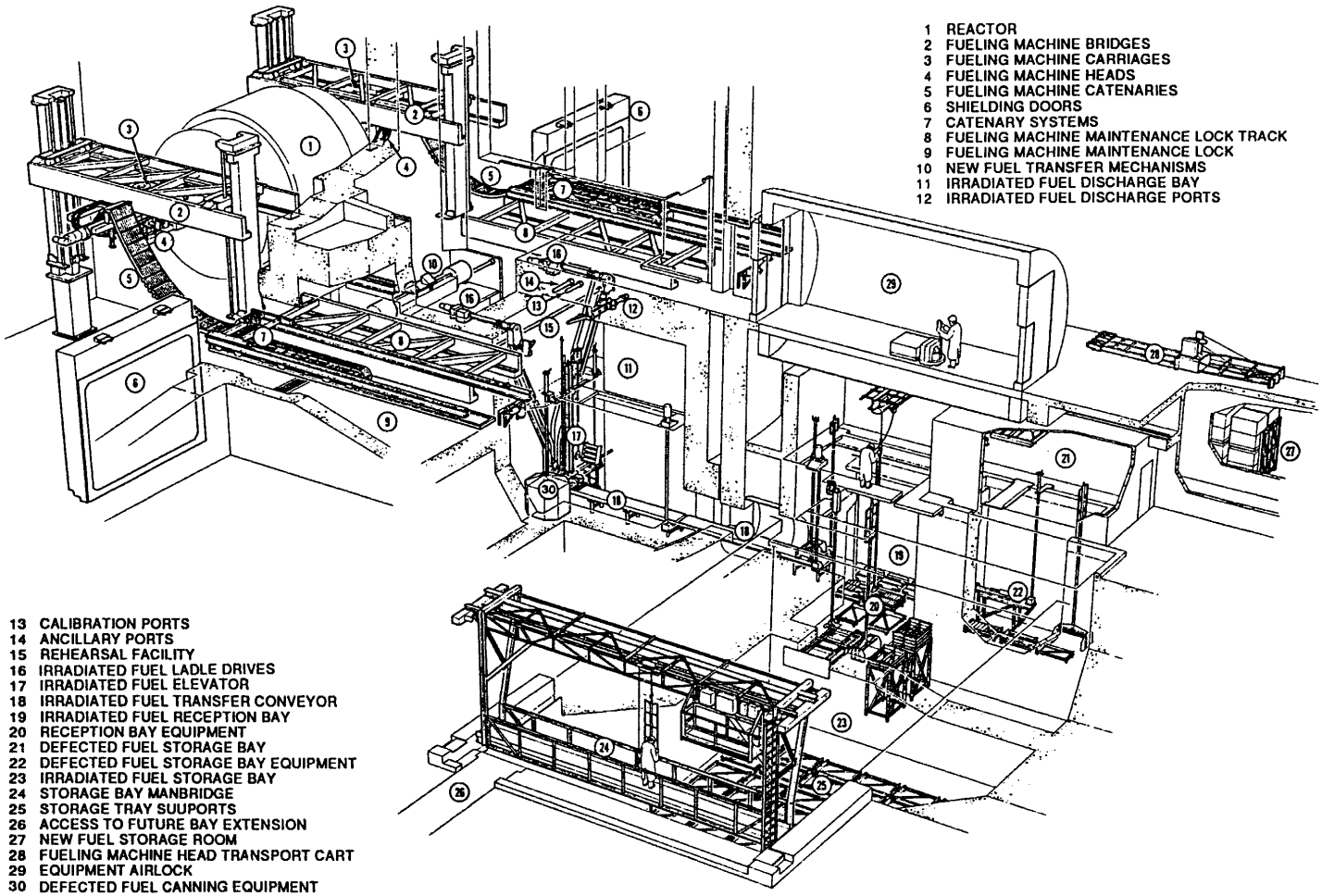

FIGURE 3-2 CANDU 6 EL HANDLING SYSTEM

Figure A-2 CANDU 6 Fuel Handling System

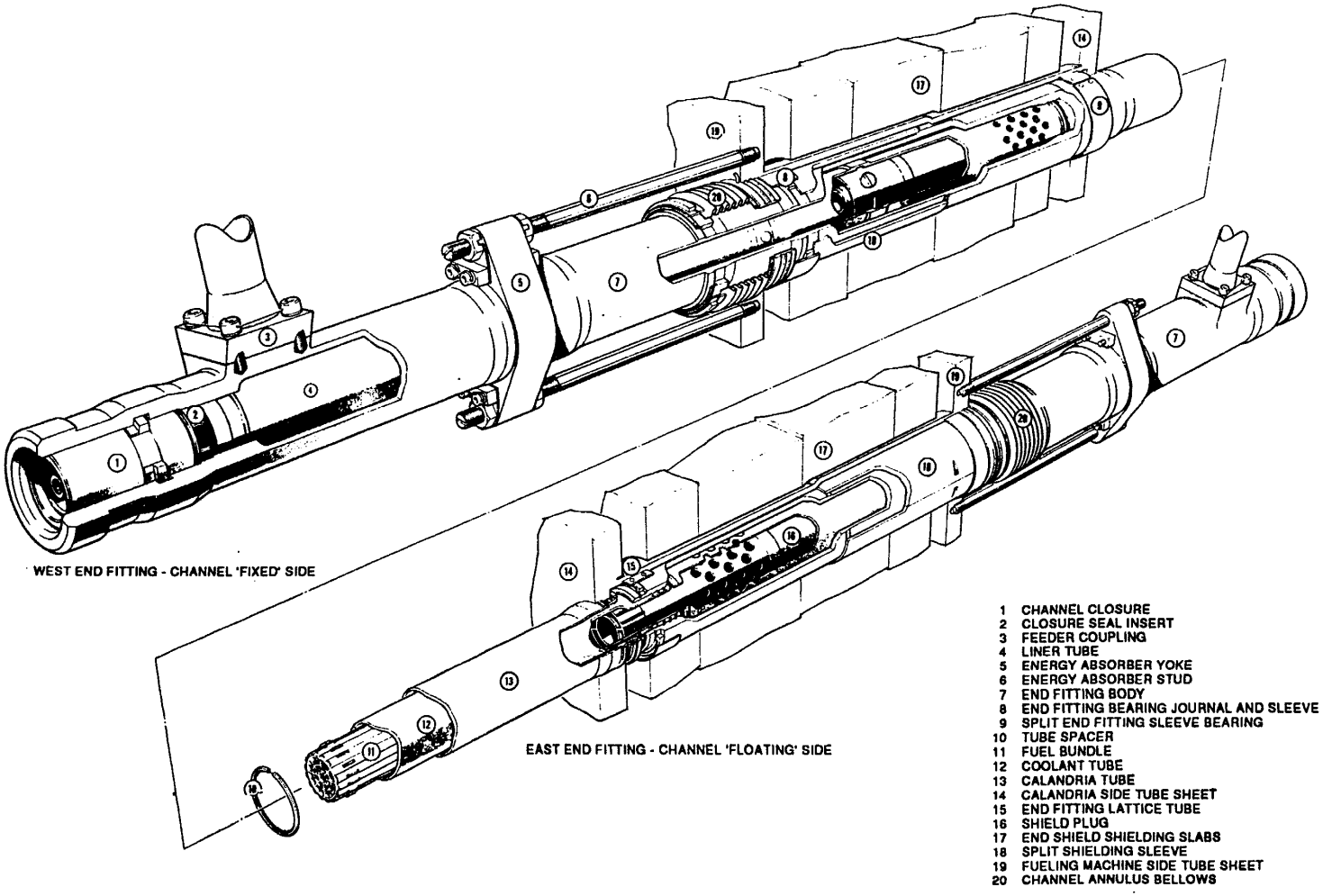

FIGURE 3-3 FUEL CHANNEL ASSEMBLY

Figure A-3 Fuel Channel Assembly

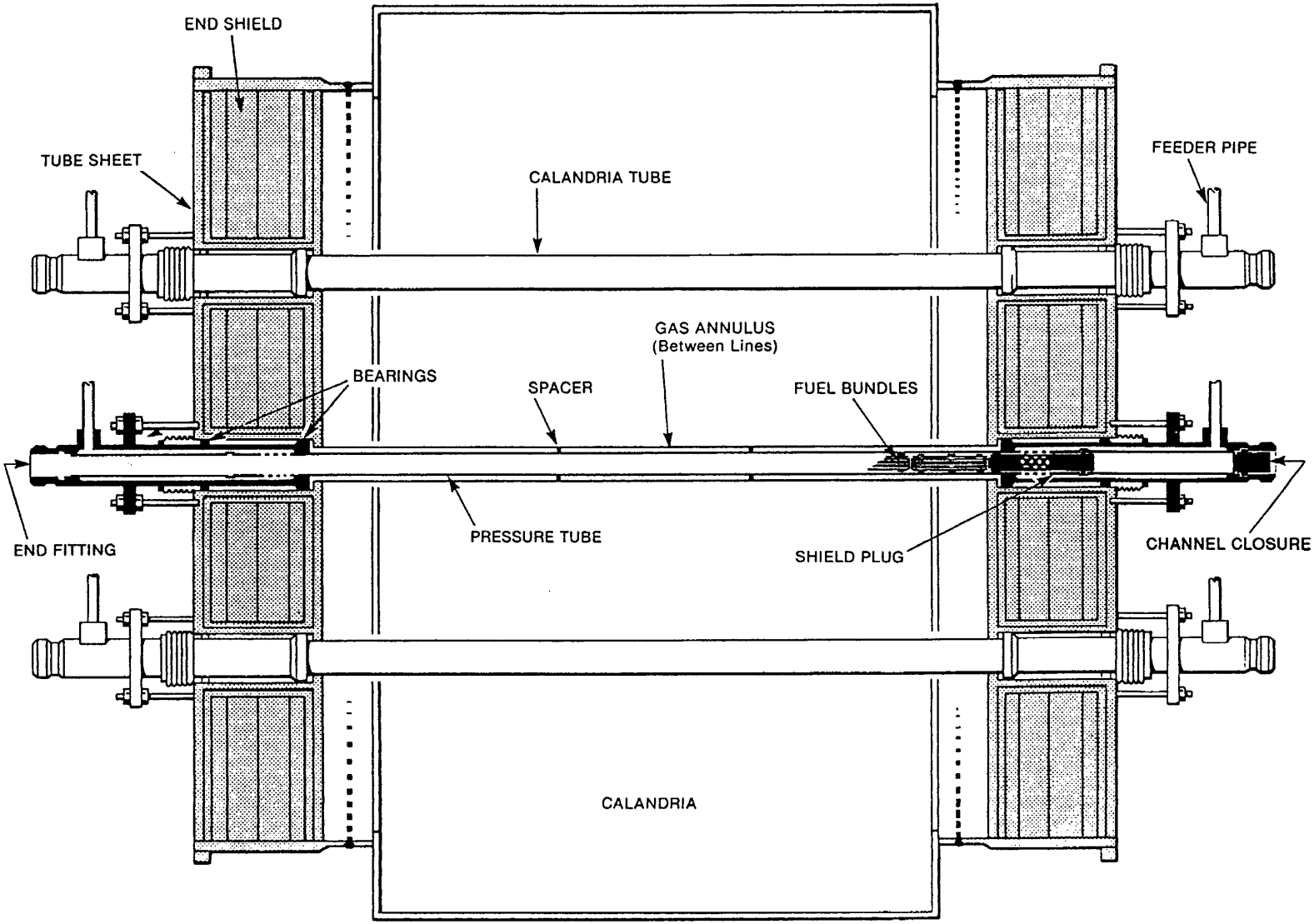

Figure A-4 Simplified Diagram of CANDU Reactor

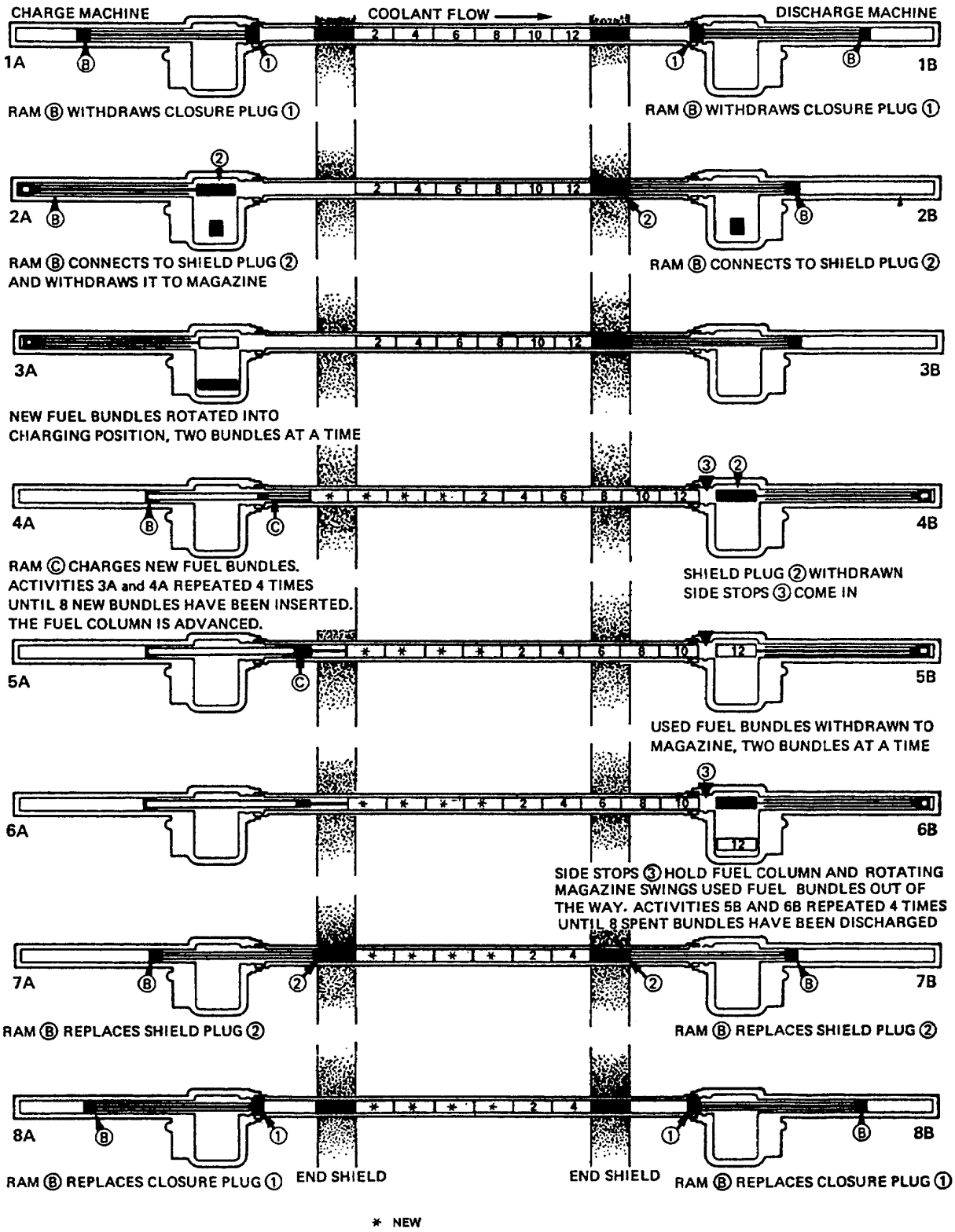

Figure A-5 FAF 8-Bundle Fuel Changing Sequence

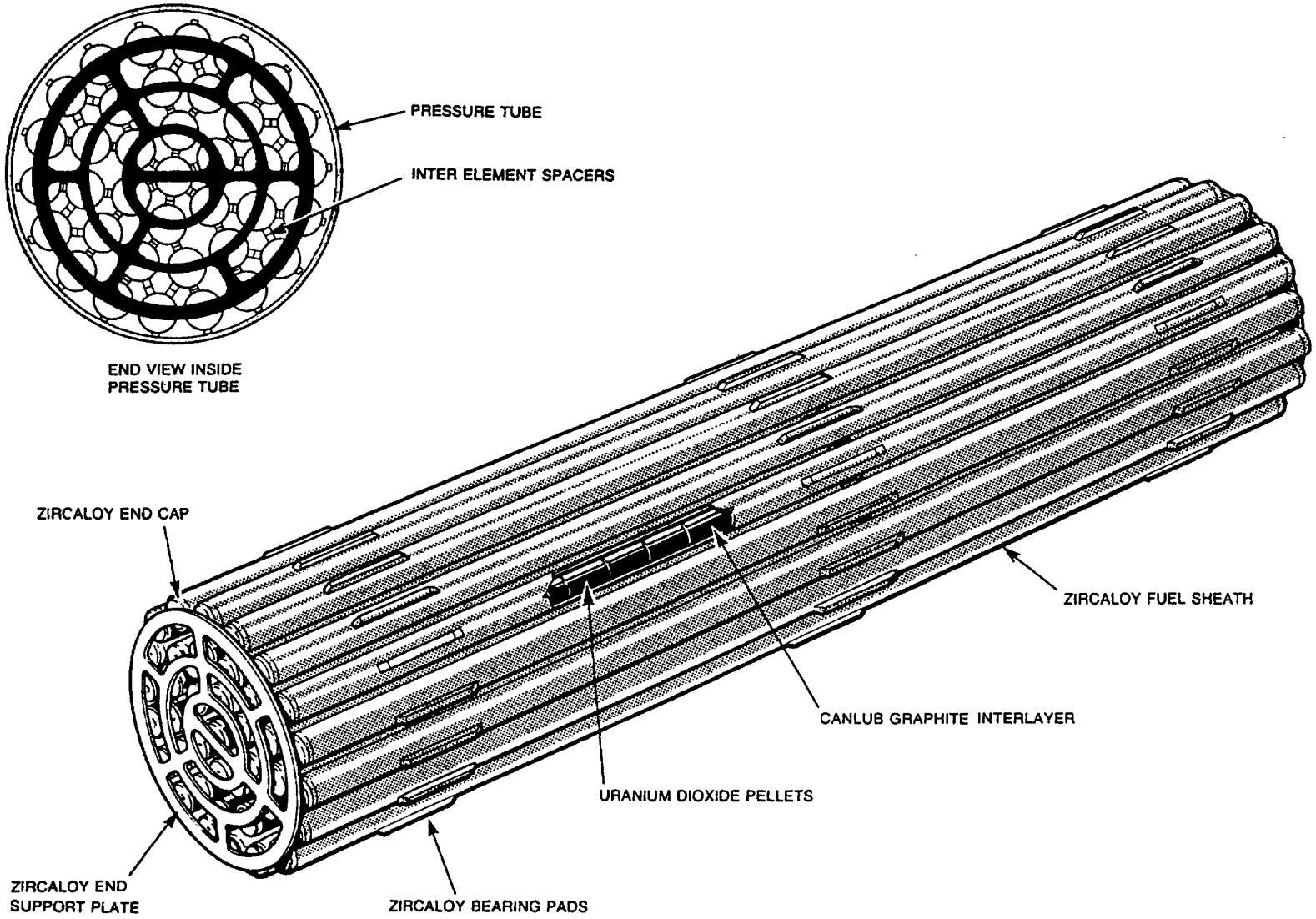

Figure A-6 37 Element Fuel Bundle

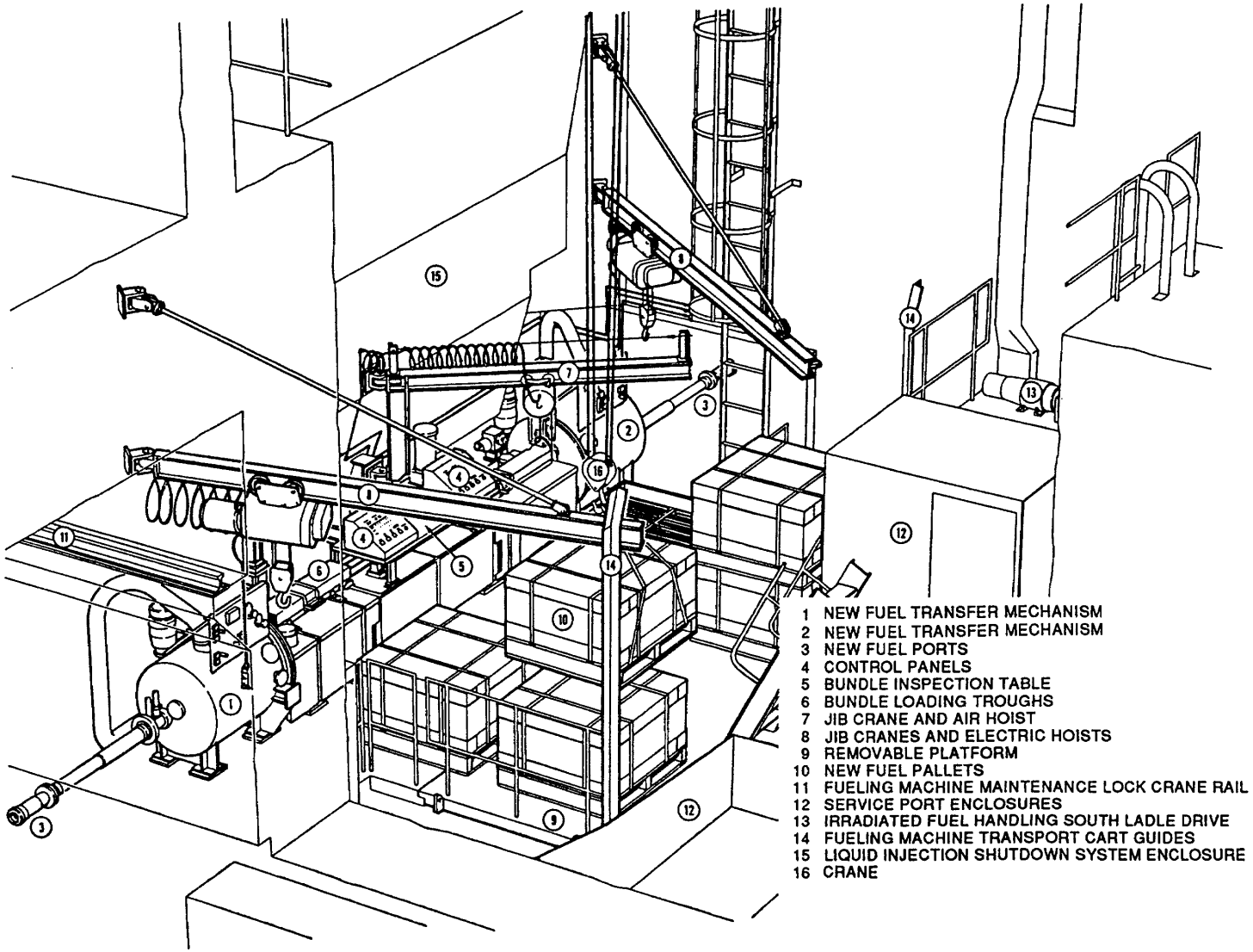

Figure A-7 New Fuel Room Equipment

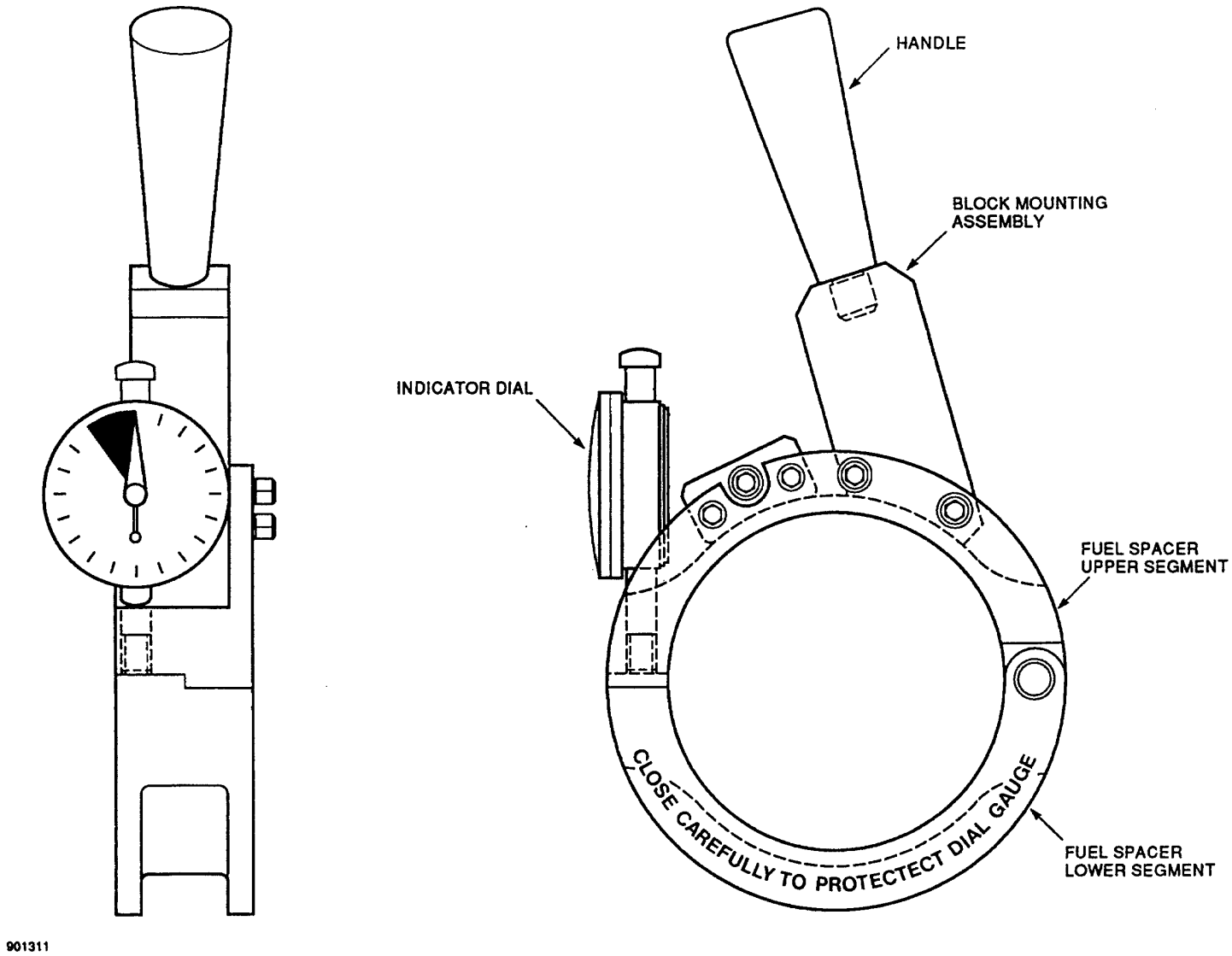

Figure A-8 New Fuel Bundle Spacer Interlock Gauge

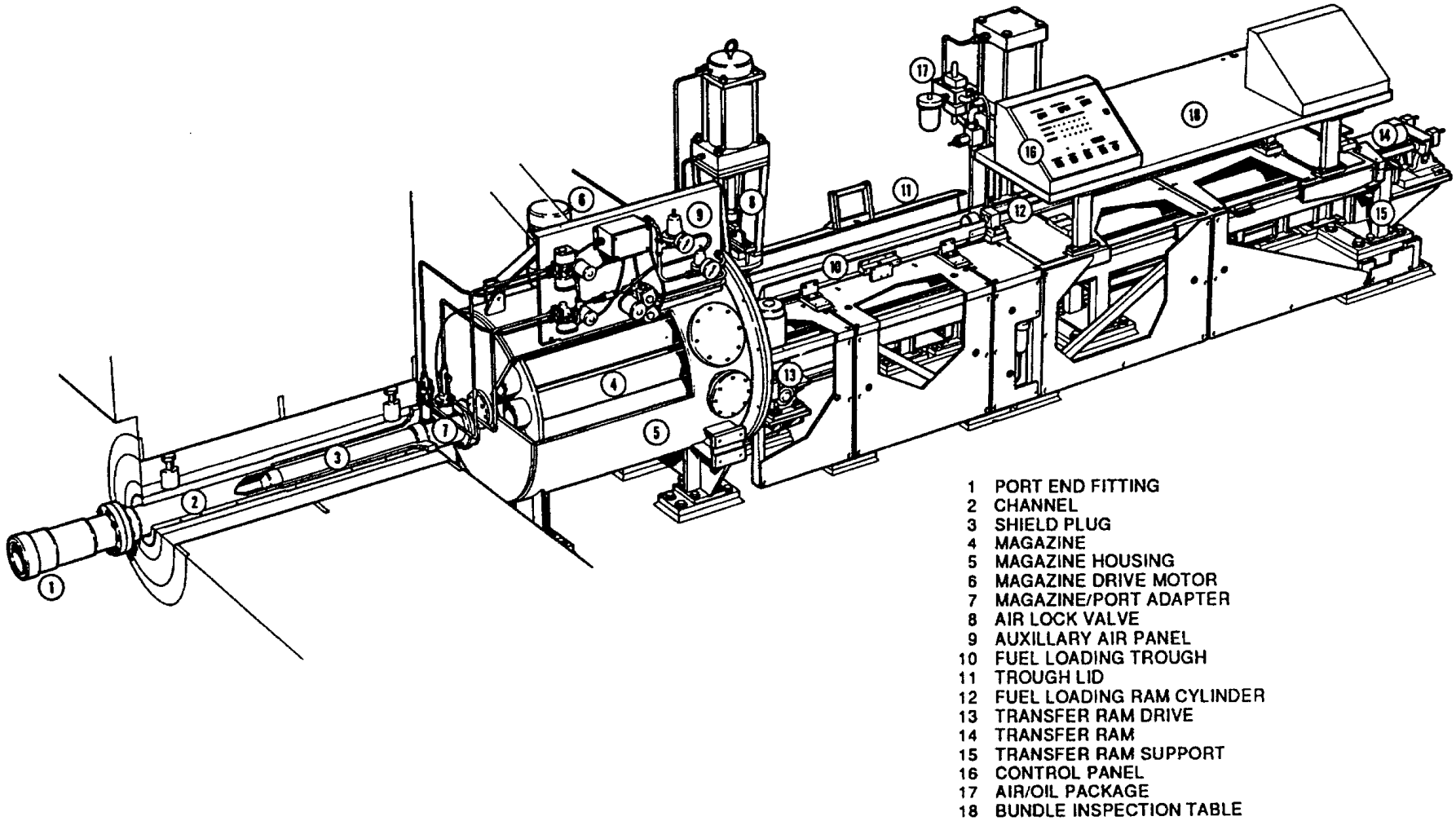

Figure A-9 New Fuel Transfer Mechanism

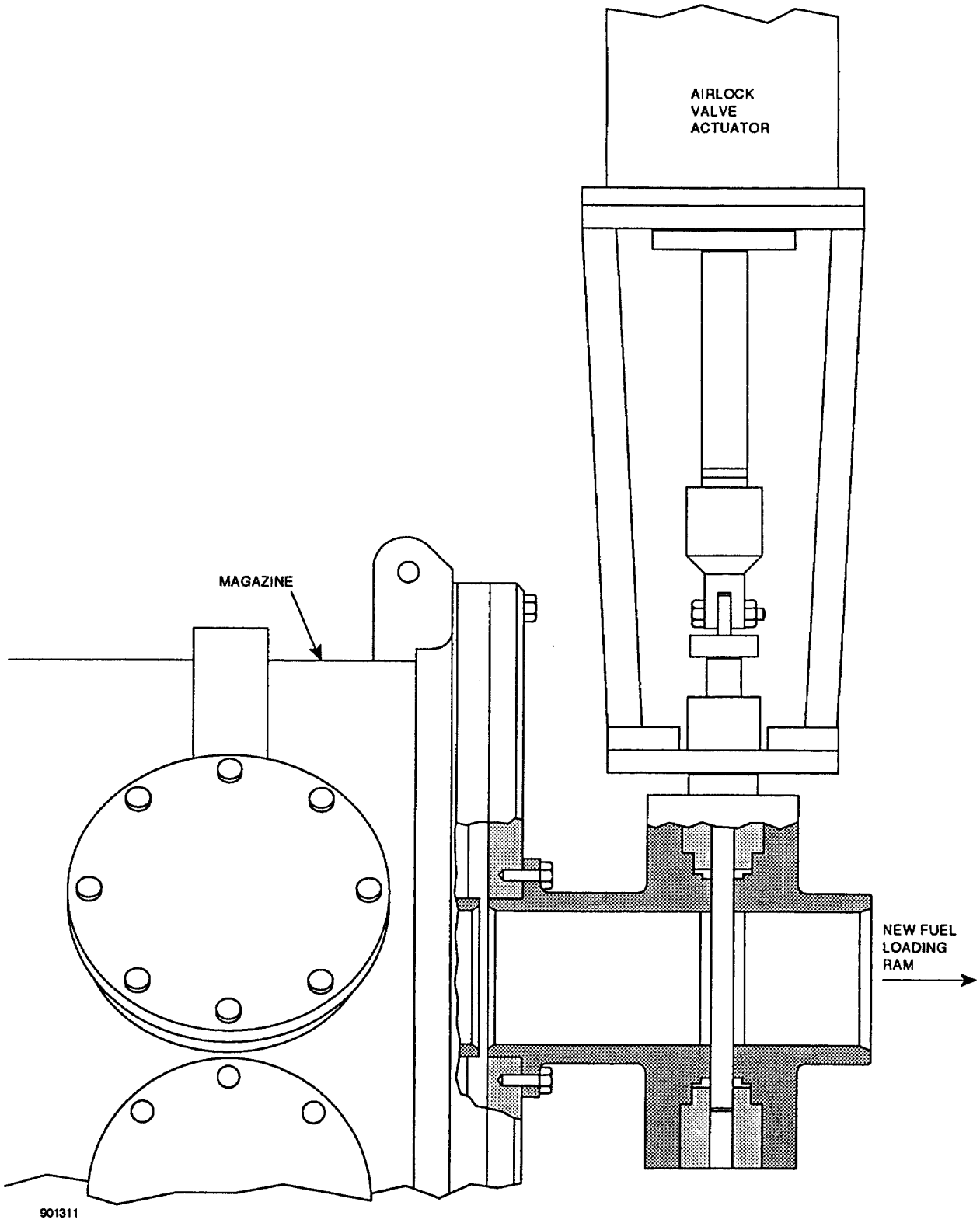

Figure A-10 Airlock Valve

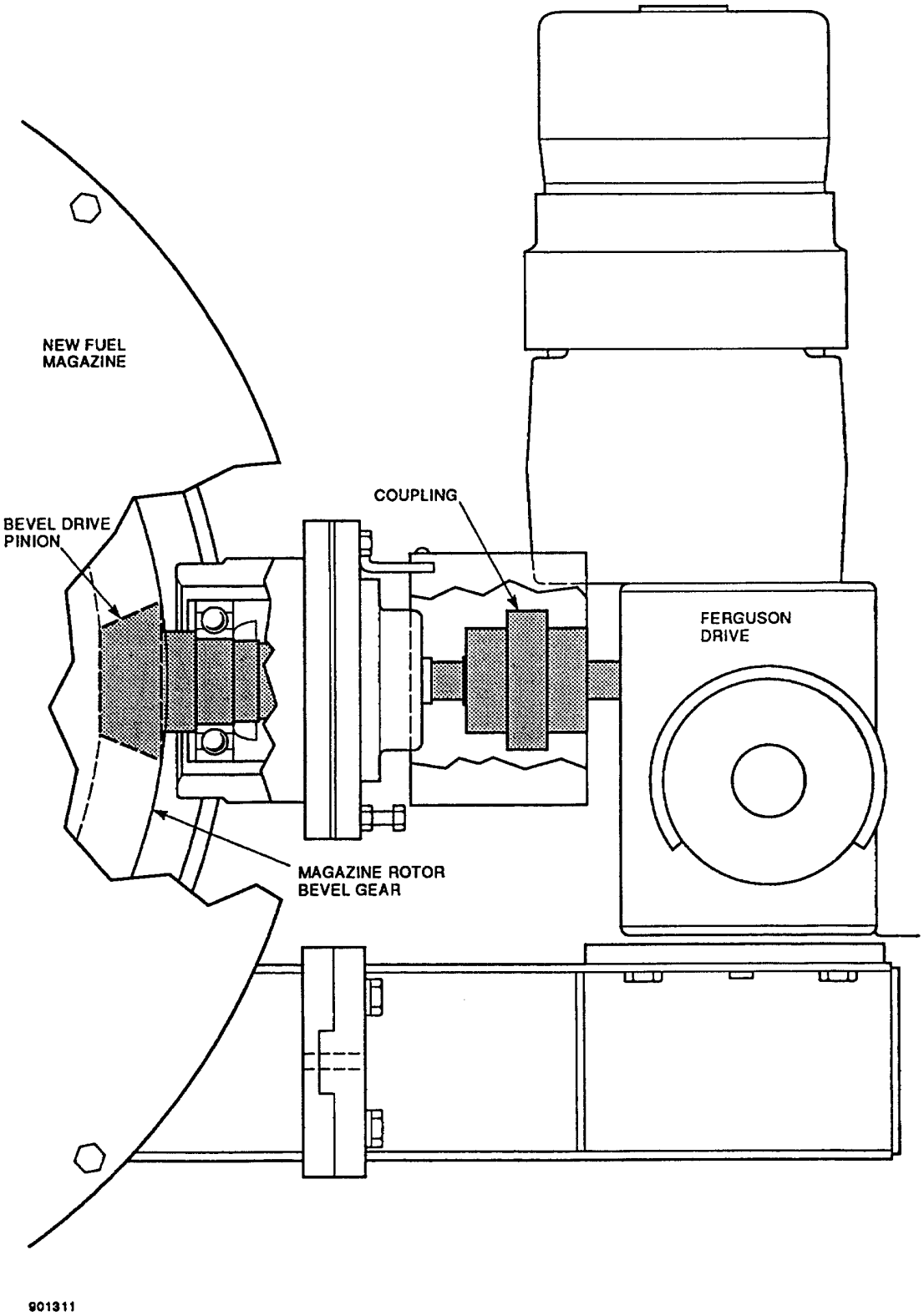

Figure A-11 New Fuel Magazine Drive

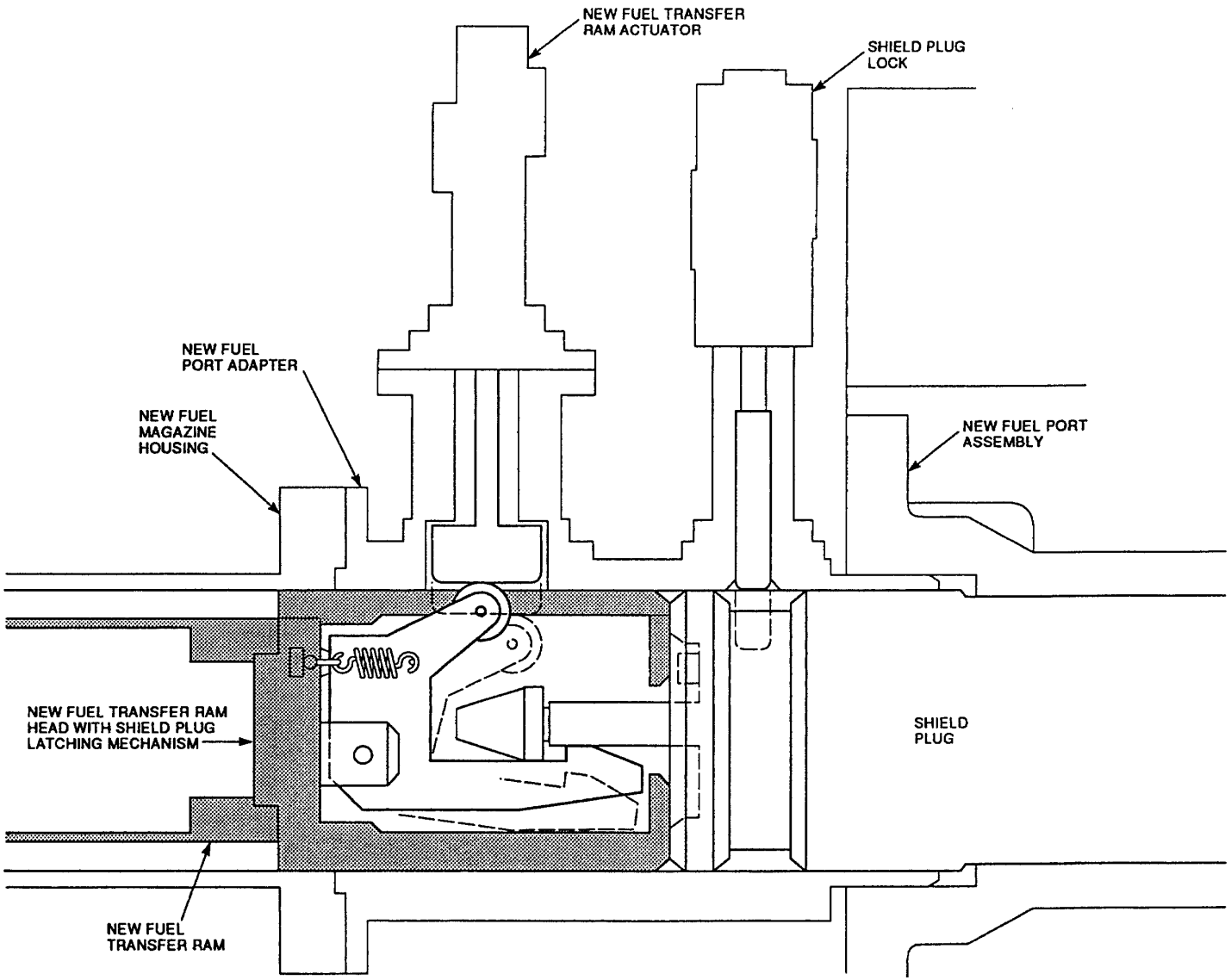

Figure A-12 Shield Plug In New Fuel Port

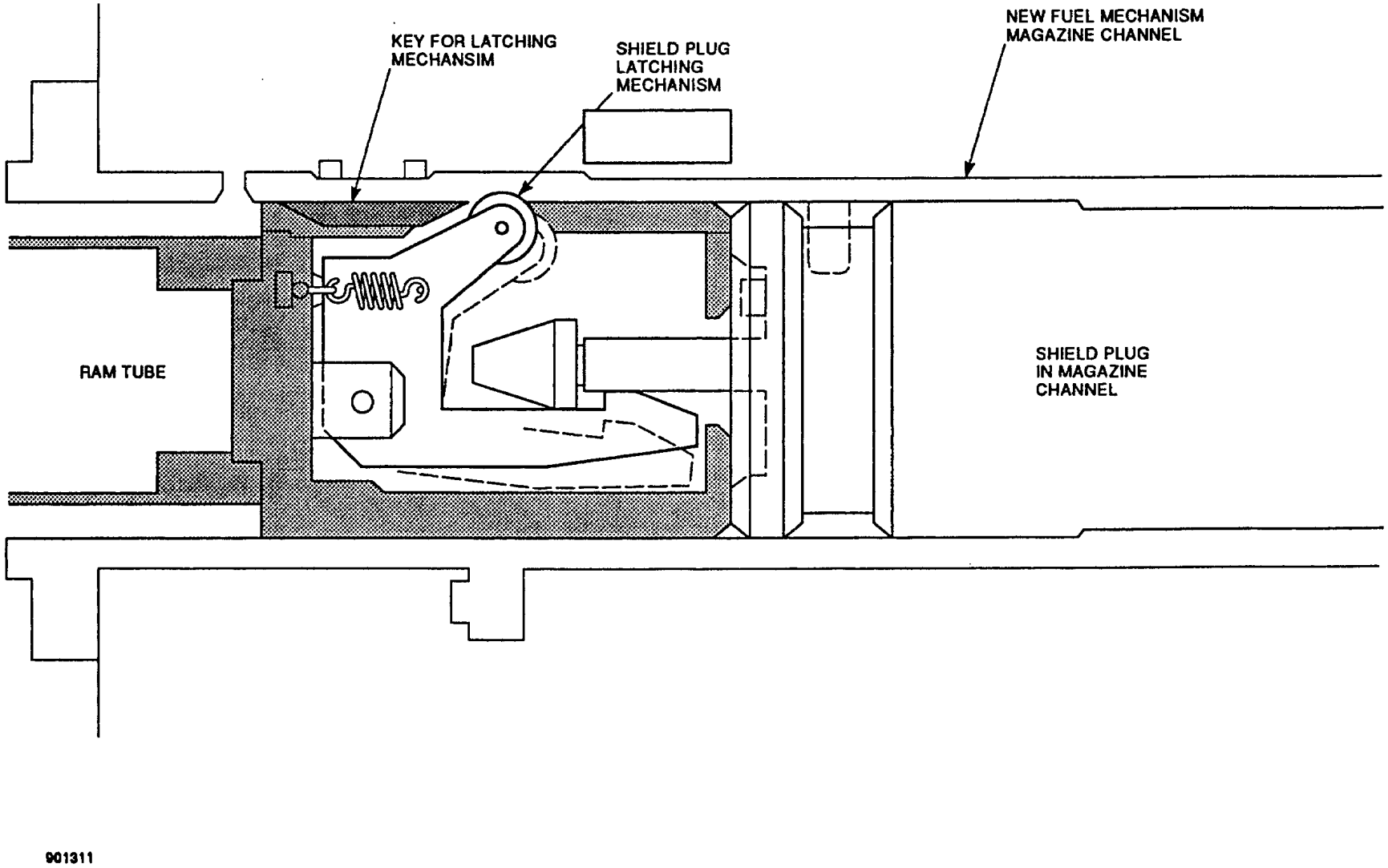

Figure A-13 Shield Plug in New Fuel Mechanism Magazine

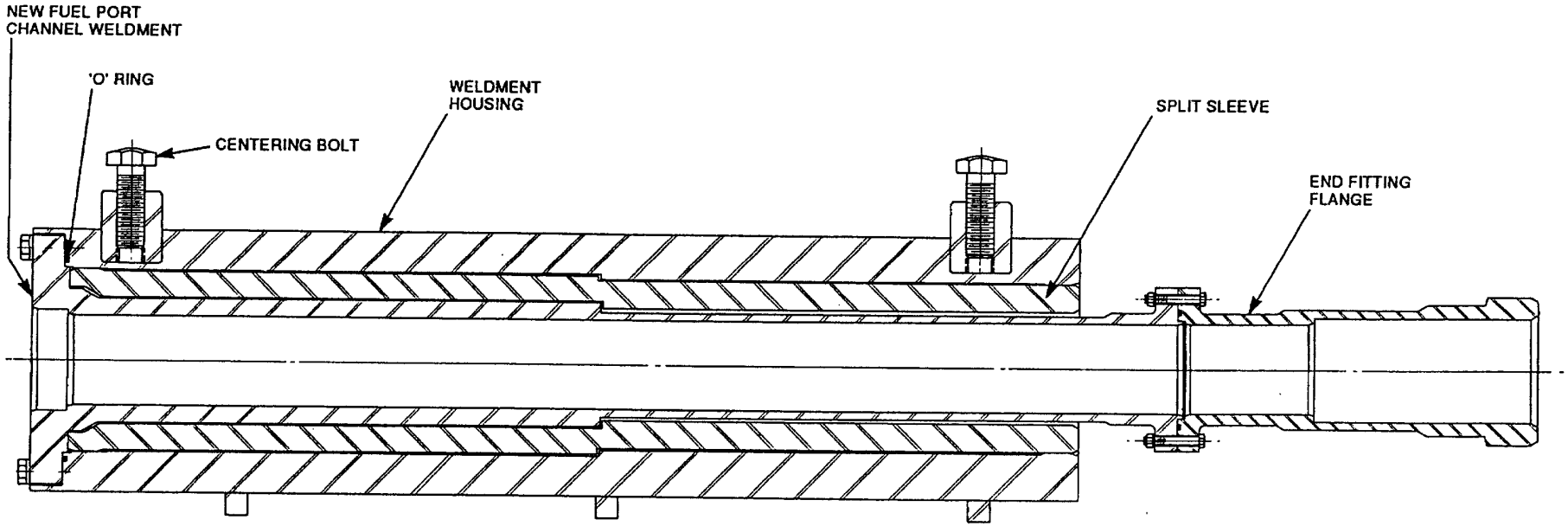

Figure A-14 New Fuel Port Assembly

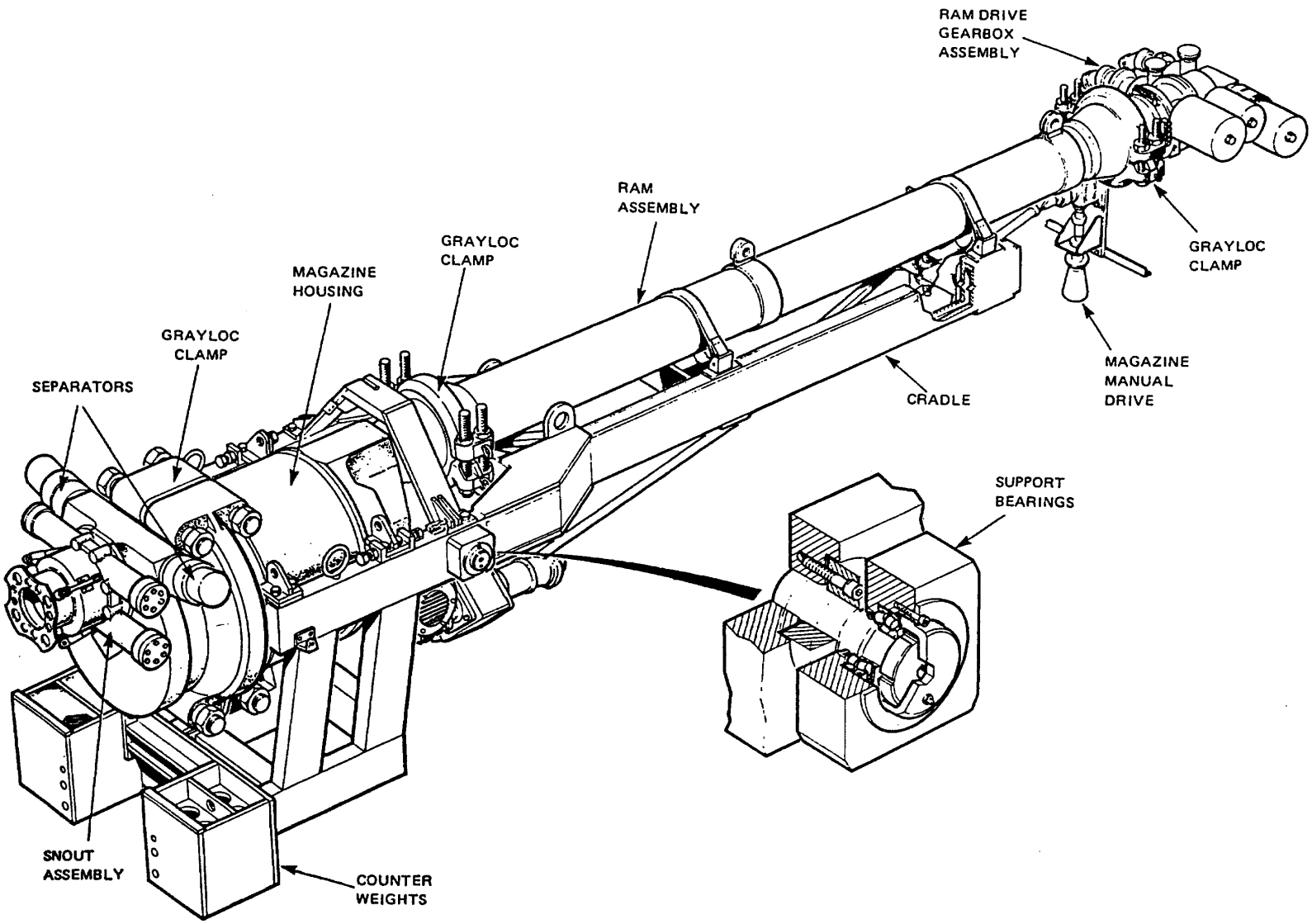

Figure A-15 Fueling Machine Head and Support Cradle Assembly

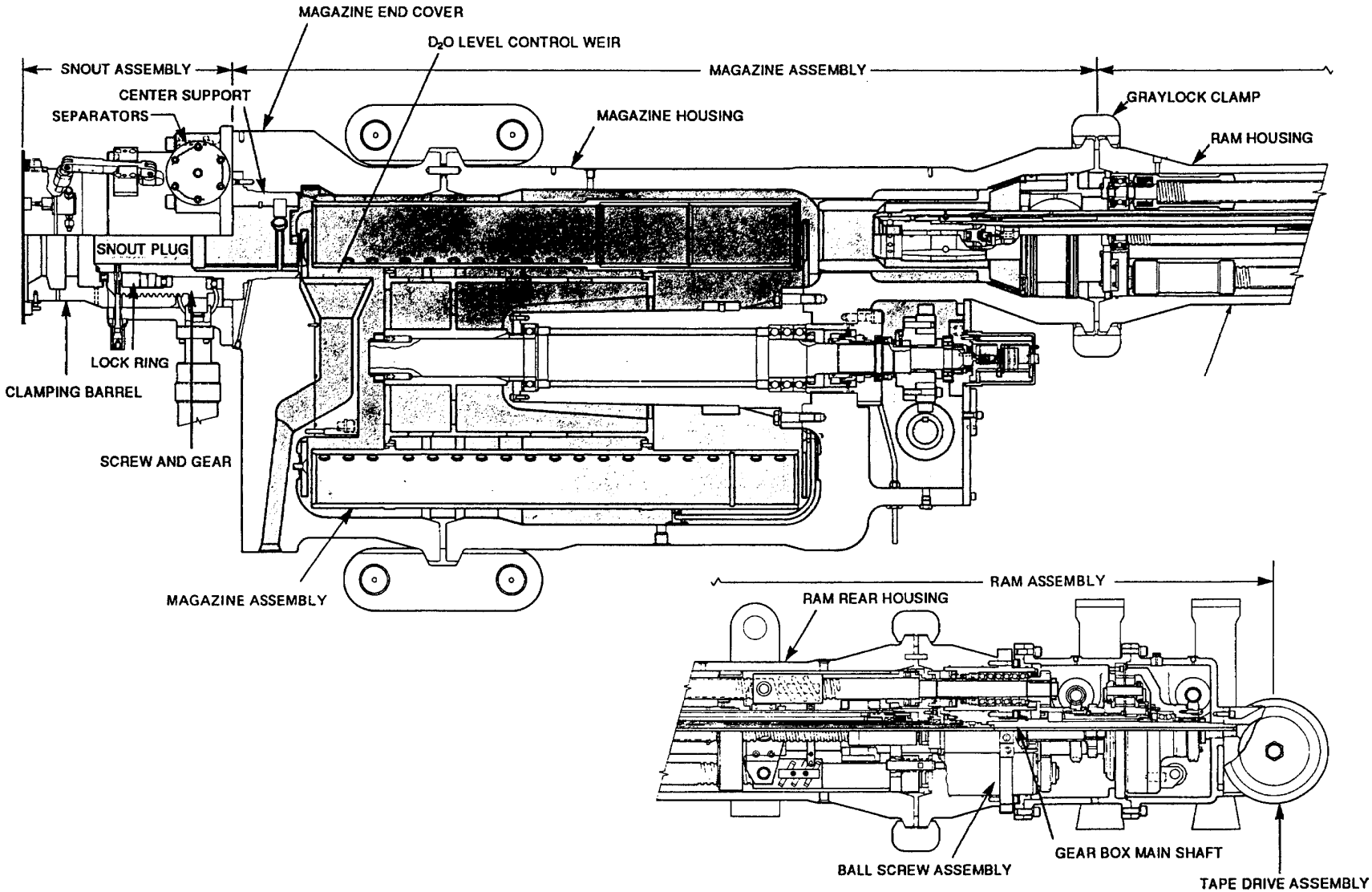

Figure A-16 Fueling Machine Head (Sectional View)

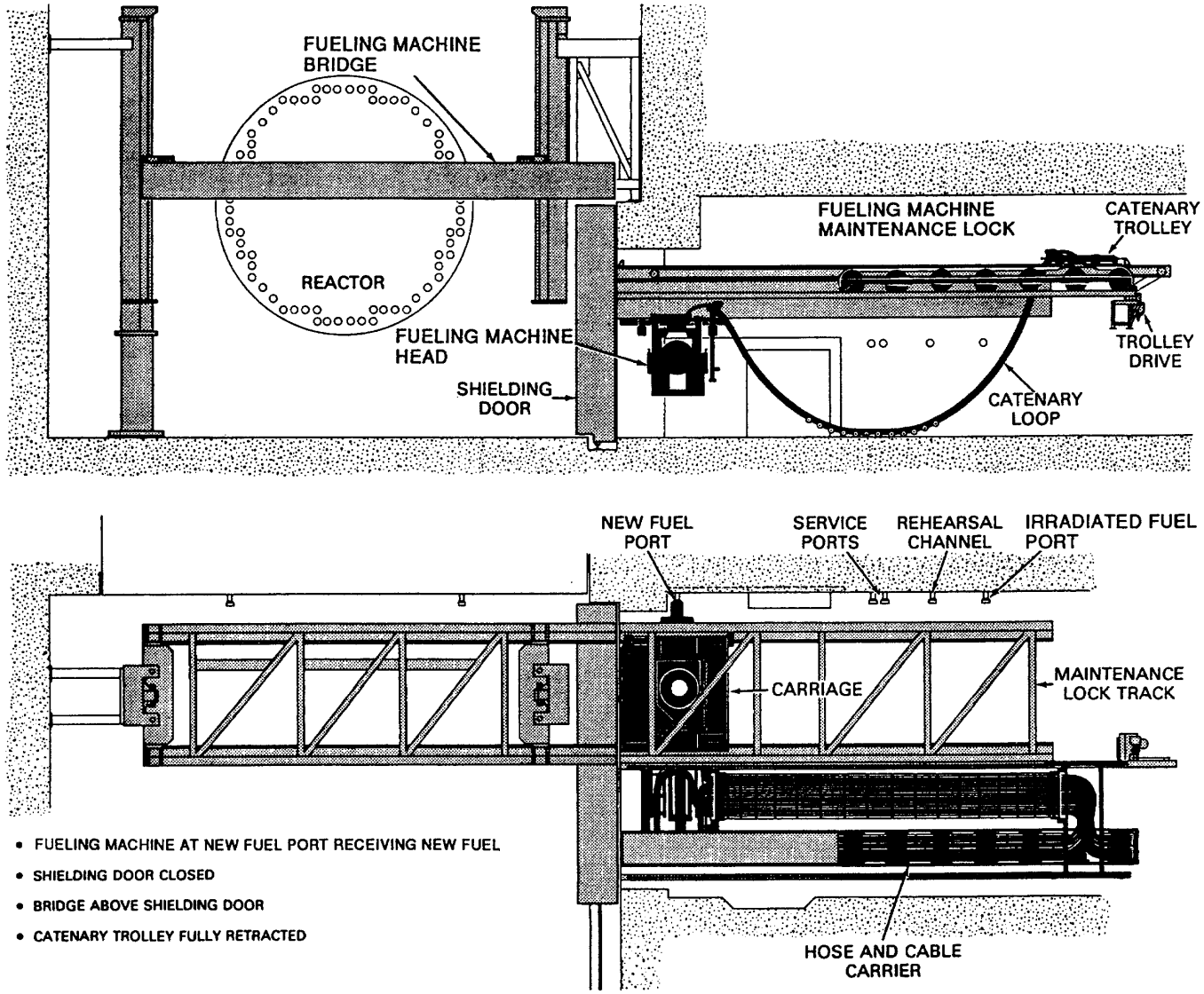

Figure A-17 Fueling Machine at New Fuel Port

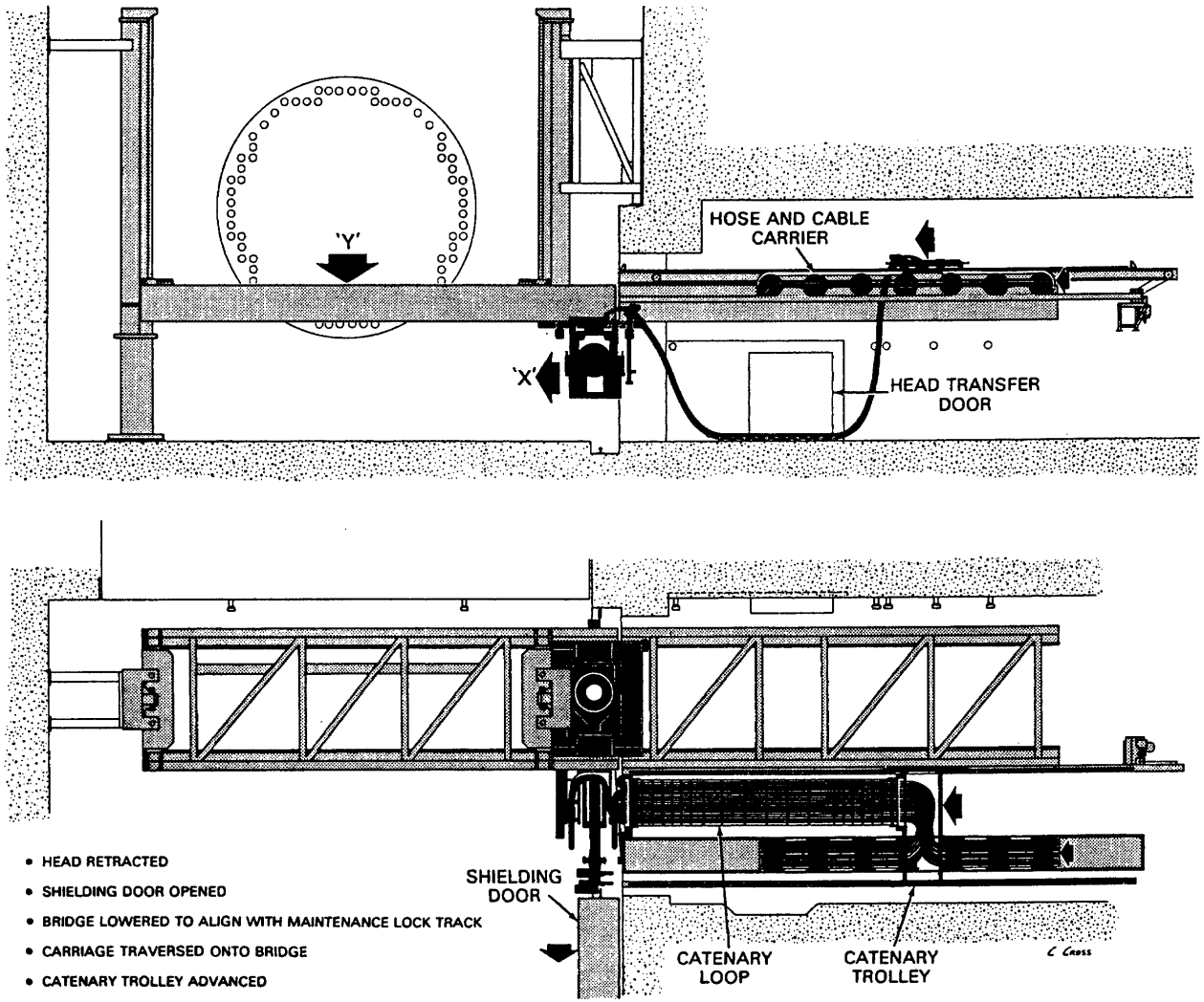

Figure A-18 Fueling Machine Traversing onto Bridge

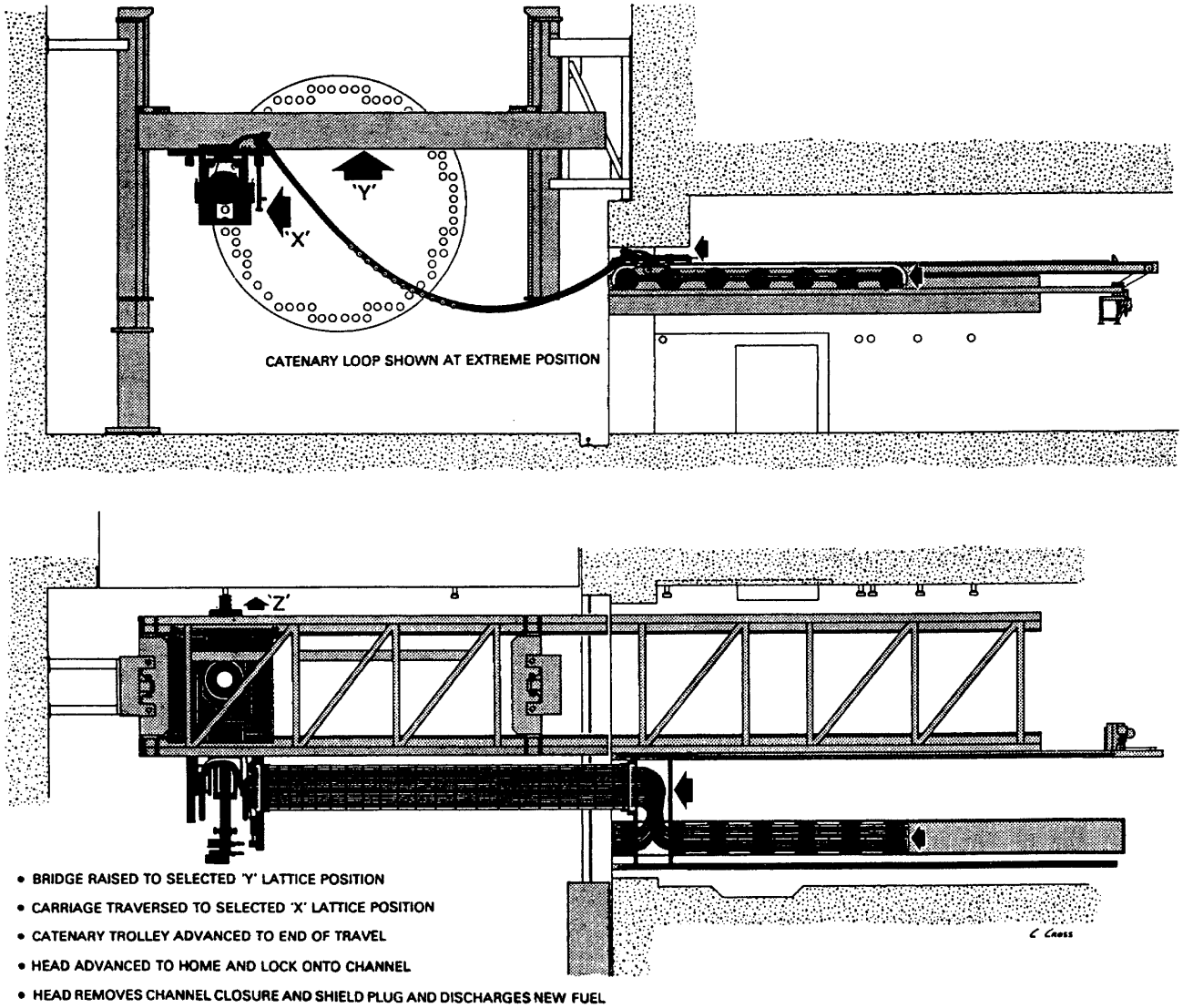

Figure A-19 Fueling Machine at Reactor Face

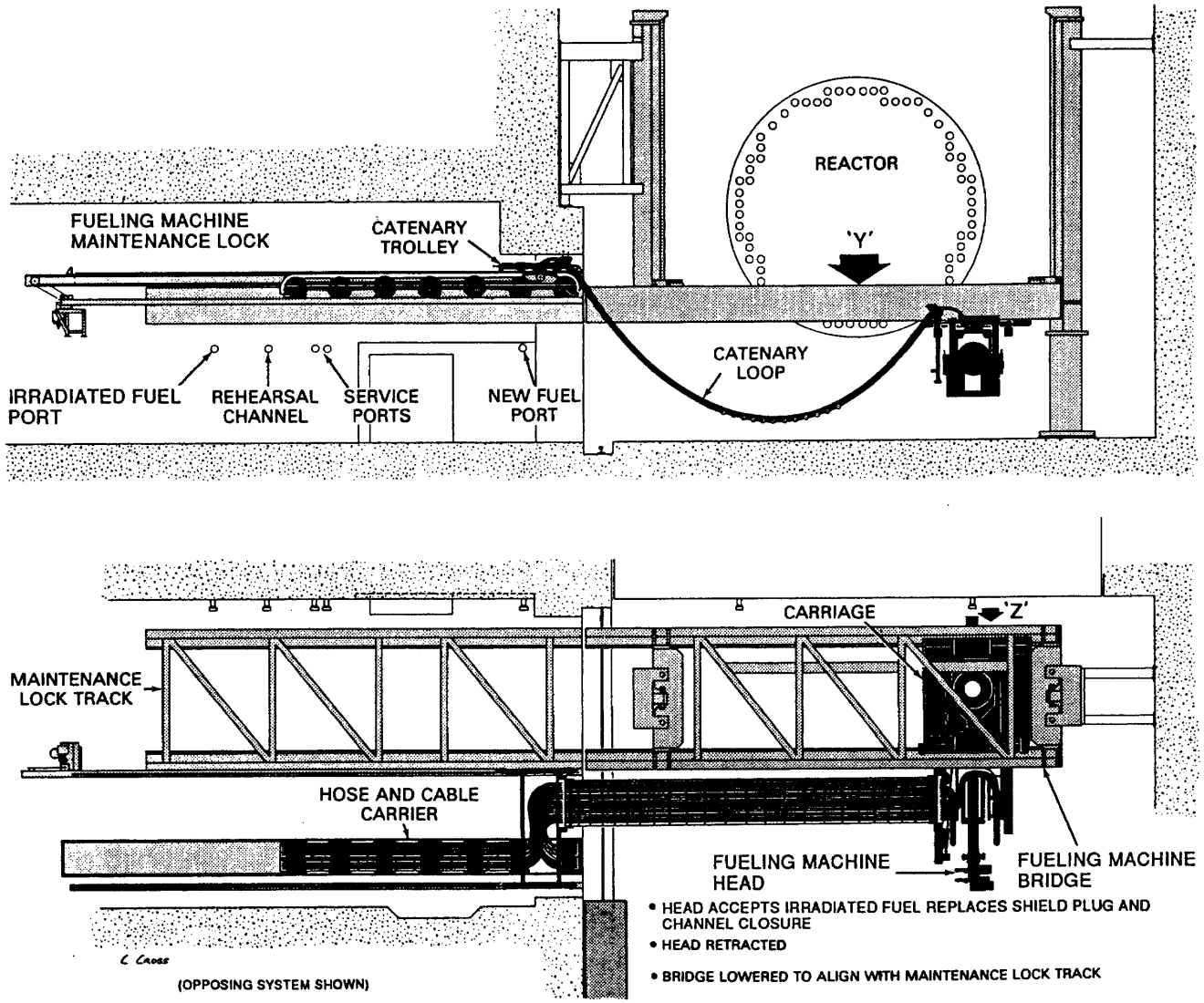

Figure A-20 Fueling Machine Leaving Reactor Face

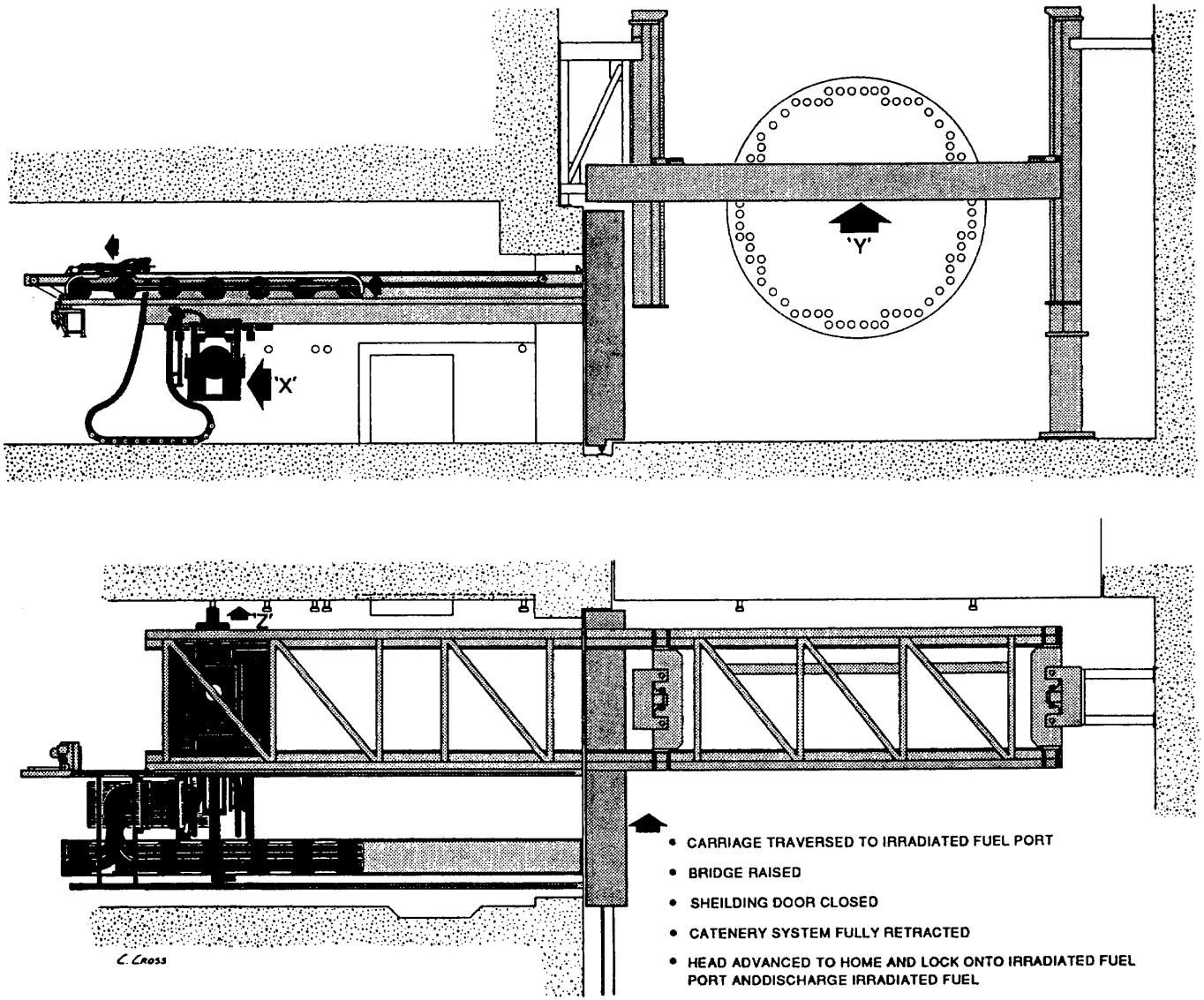

Figure A-21 Fueling Machine at Irradiated Fuel Port

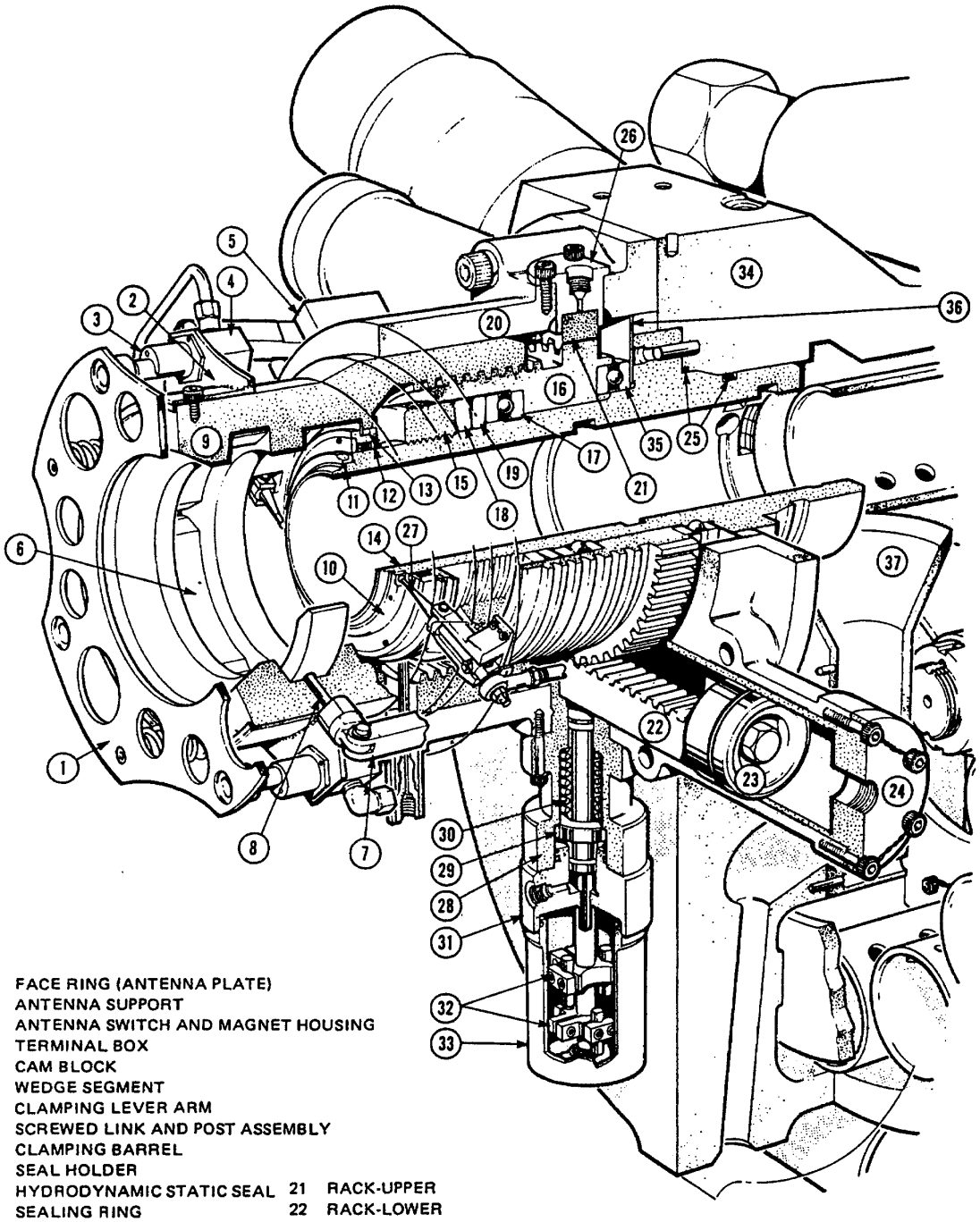

1 FACE RING (ANTENNA PLATE)
2 ANTENNA SUPPORT
3 ANTENNA SWITCH AND MAGNET HOUSING
4 TERMINAL BOX
5 CAM BLOCK
6 WEDGE SEGMENT
7 CLAMPING LEVER ARM
8 SCREWED LINK AND POST ASSEMBLY
9 CLAMPING BARREL
10 SEAL HOLDER
11 HYDRODYNAMIC STATIC SEAL
12 SEALING RING
13 'O' RING
14 CENTRE SUPPORT
15 LOCK RING
16 SCREW AND GEAR
17 FRONT THRUST BEARING
18 BELEVILLE SPRING WASHER
19 SPACER
20 OUTER SUPPORT
21 RACK-UPPER
22 RACK-LOWER
23 PISTON
24 CYLINDER
25 'O' RING
26 GUIDE PLUG
27 SNOUT PROBES
28 EMERGENCY LOCK PISTON HOUSING
29 EMERGENCY LOCK PISTON
30 EMERGENCY LOCK SPRING
31 EMERGENCY LOCK COVER (CYLINDER)
32 REED SWITCHES
33 EMERGENCY LOCK COVER
34 MAGAZINE END COVER
35 REAR THRUST BEARING
36 SPLIT SPACER
37 WEIR

Figure A-22 Snout Assembly

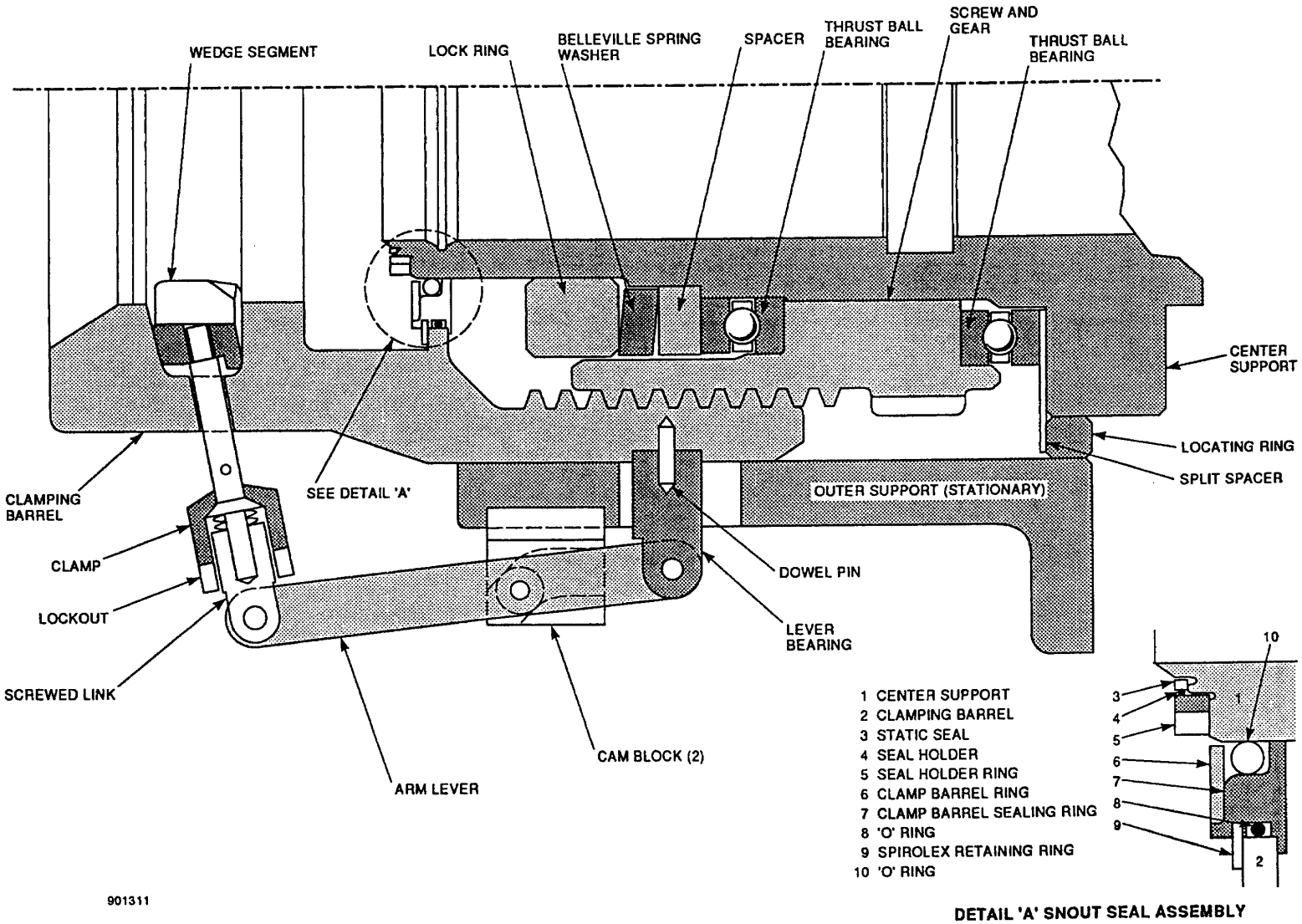

Figure A-23 Fueling Machine Head Snout Assembly (Sectional View)

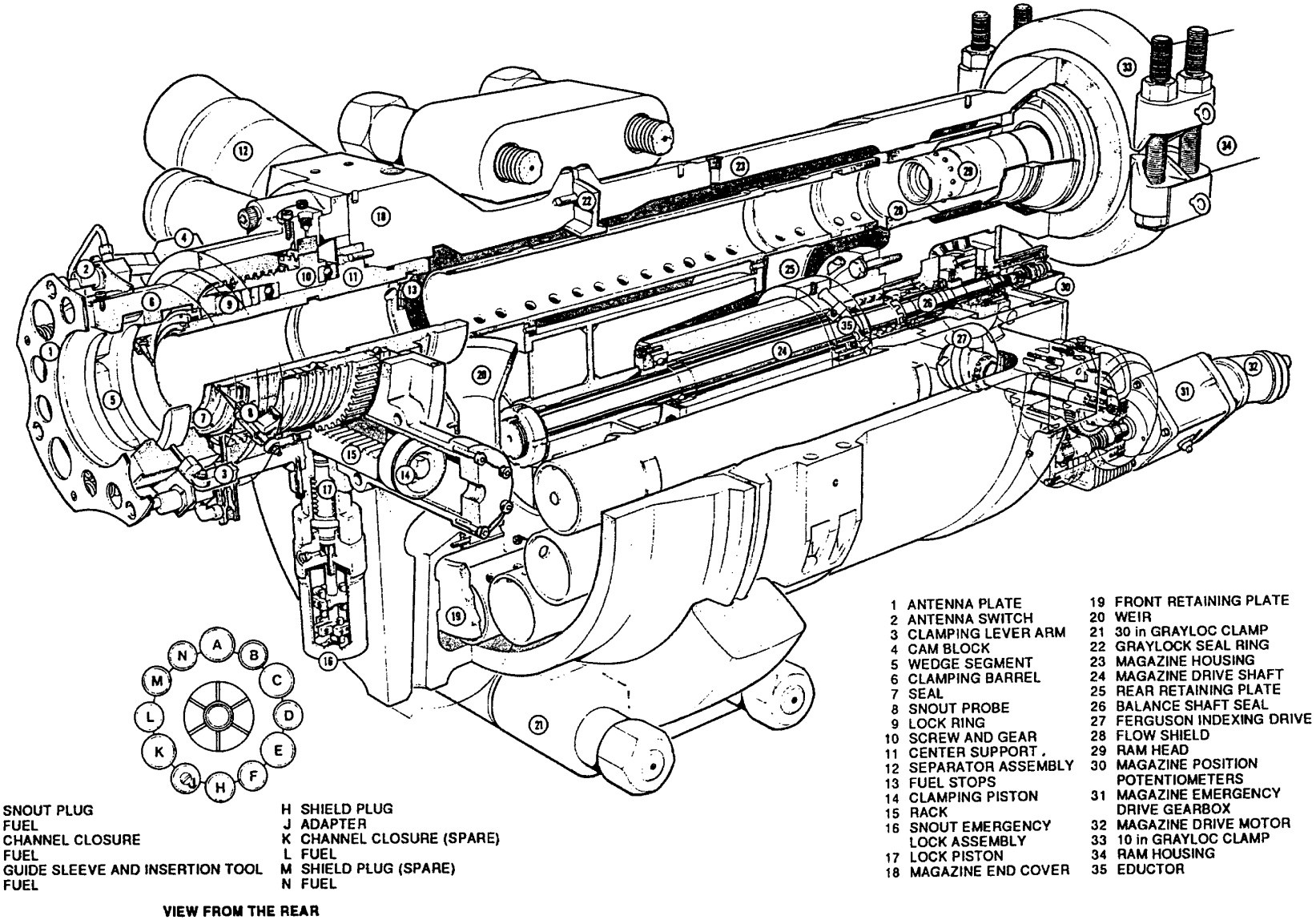

Figure A-24 Magazine Assembly Fueling Machine Head

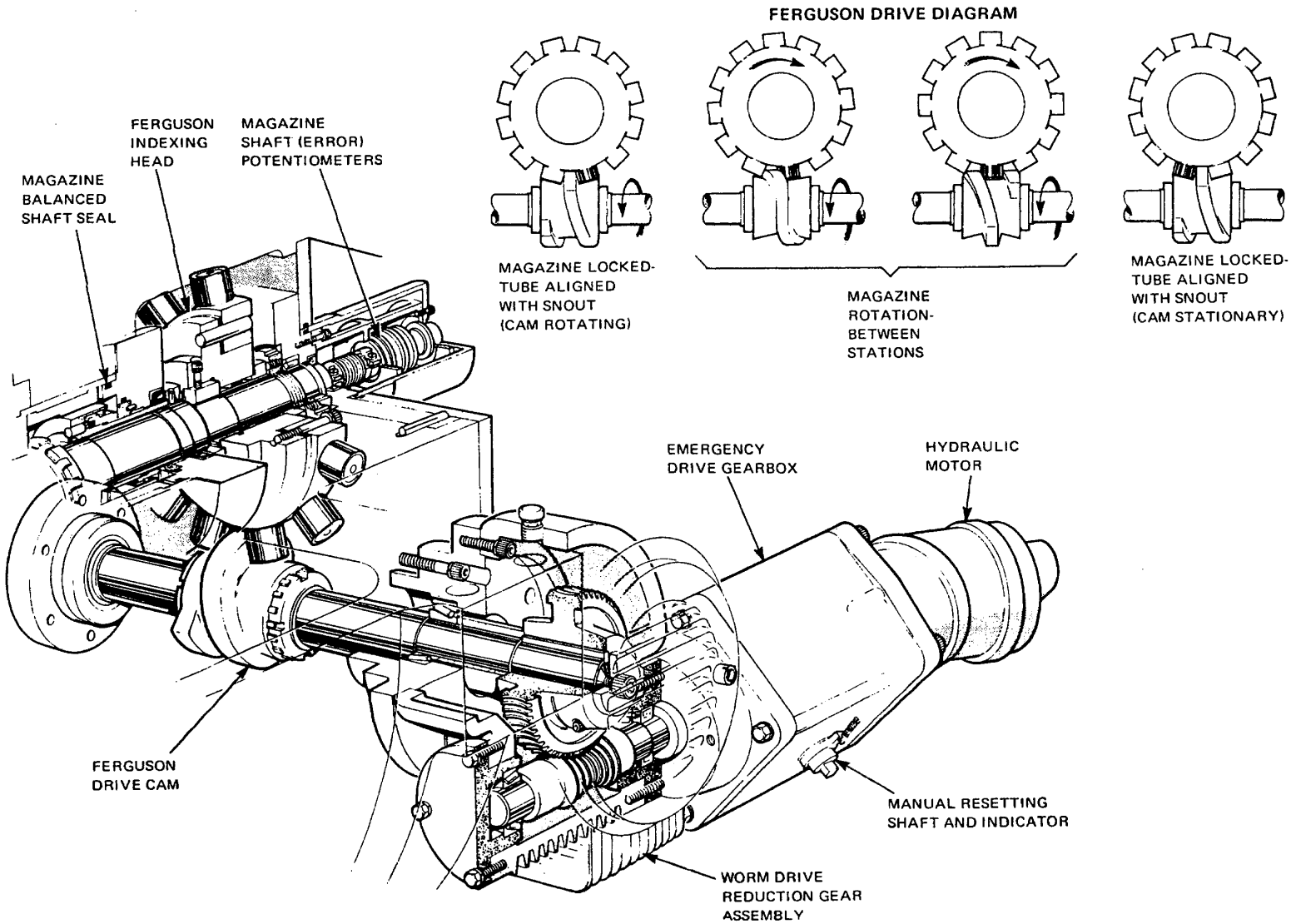

Figure A-25 Magazine Drive System

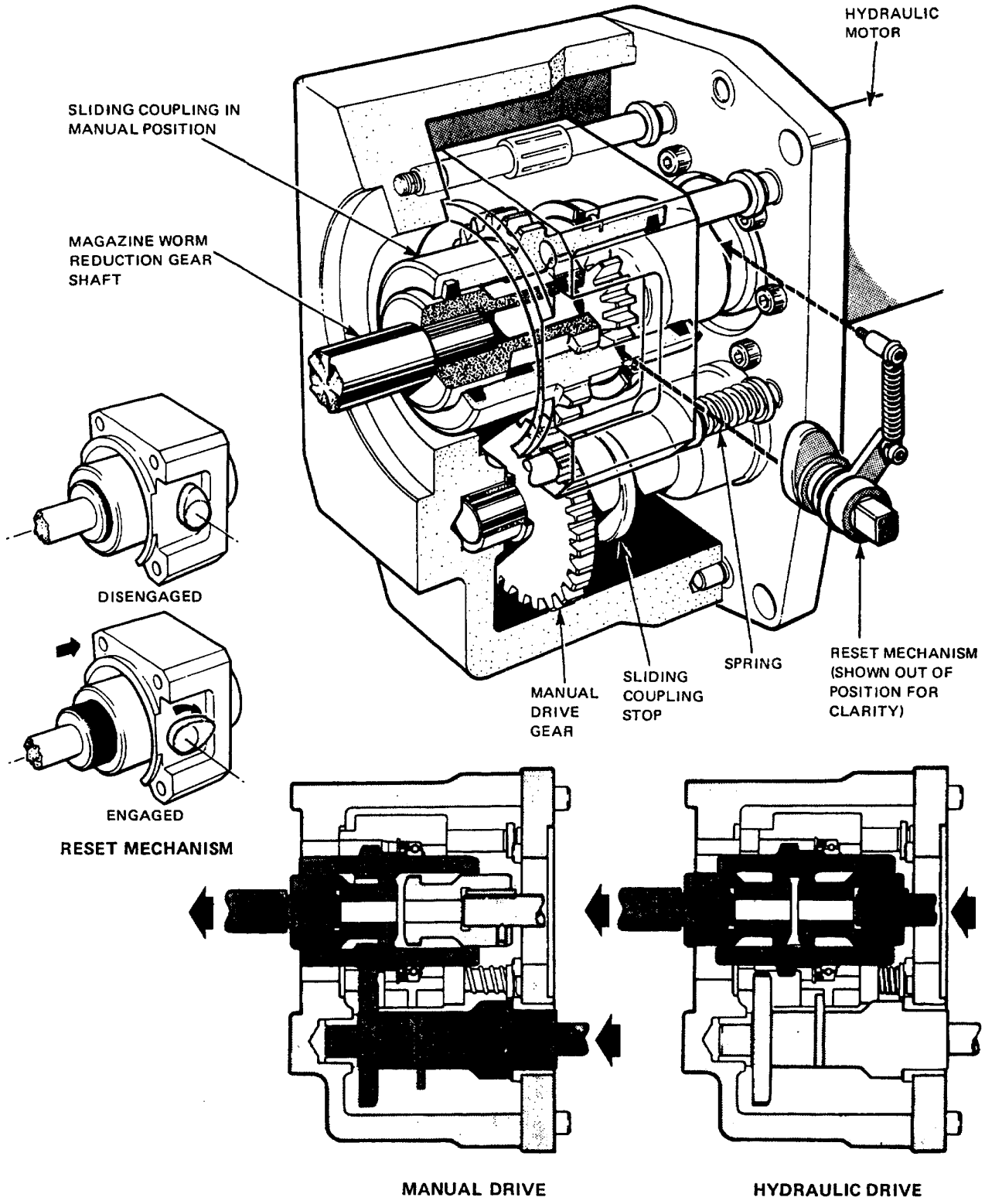

Figure A-26 Magazine Emergency Drive Gearbox

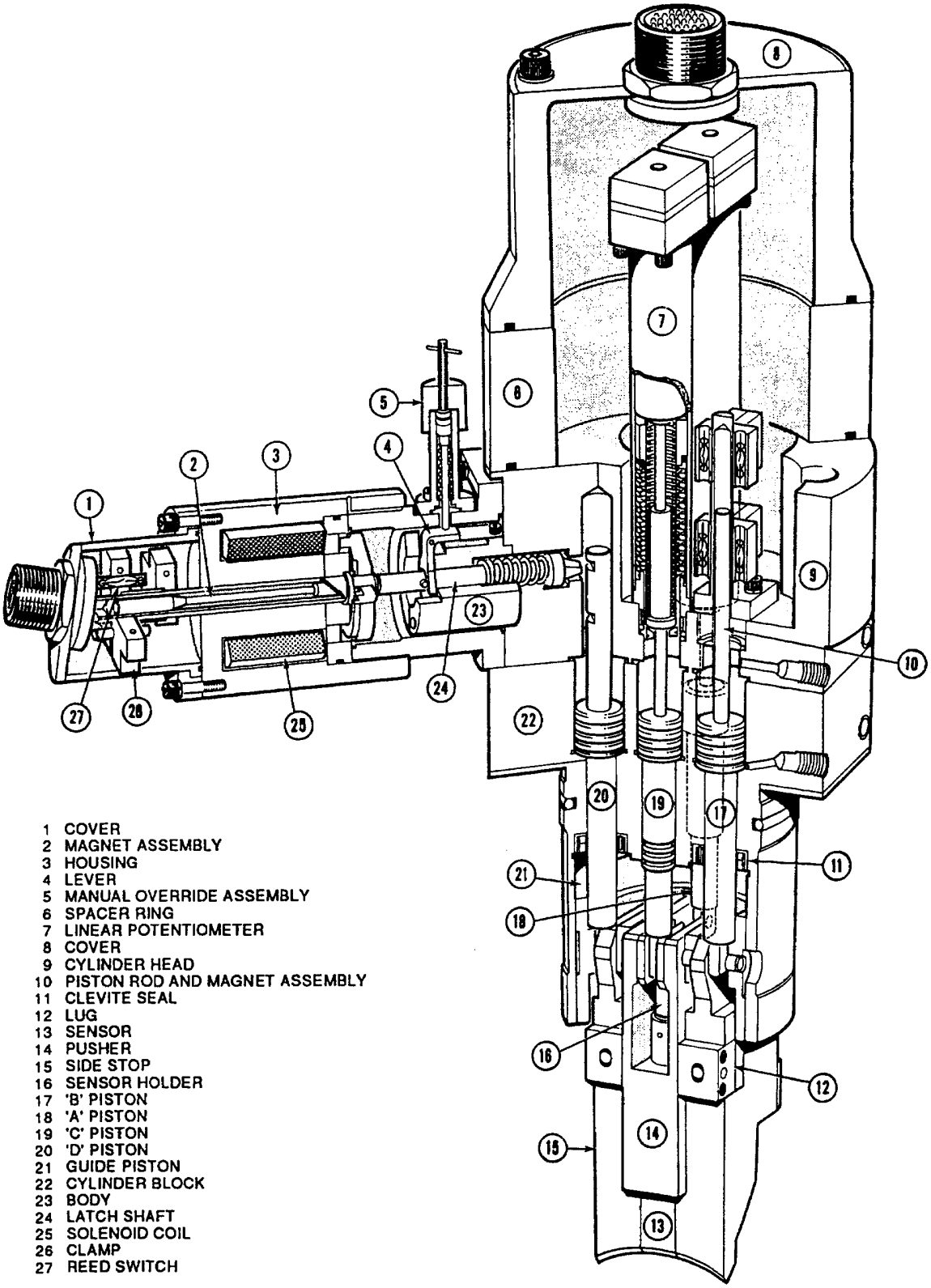

Figure A-27 Fueling Machine Separator

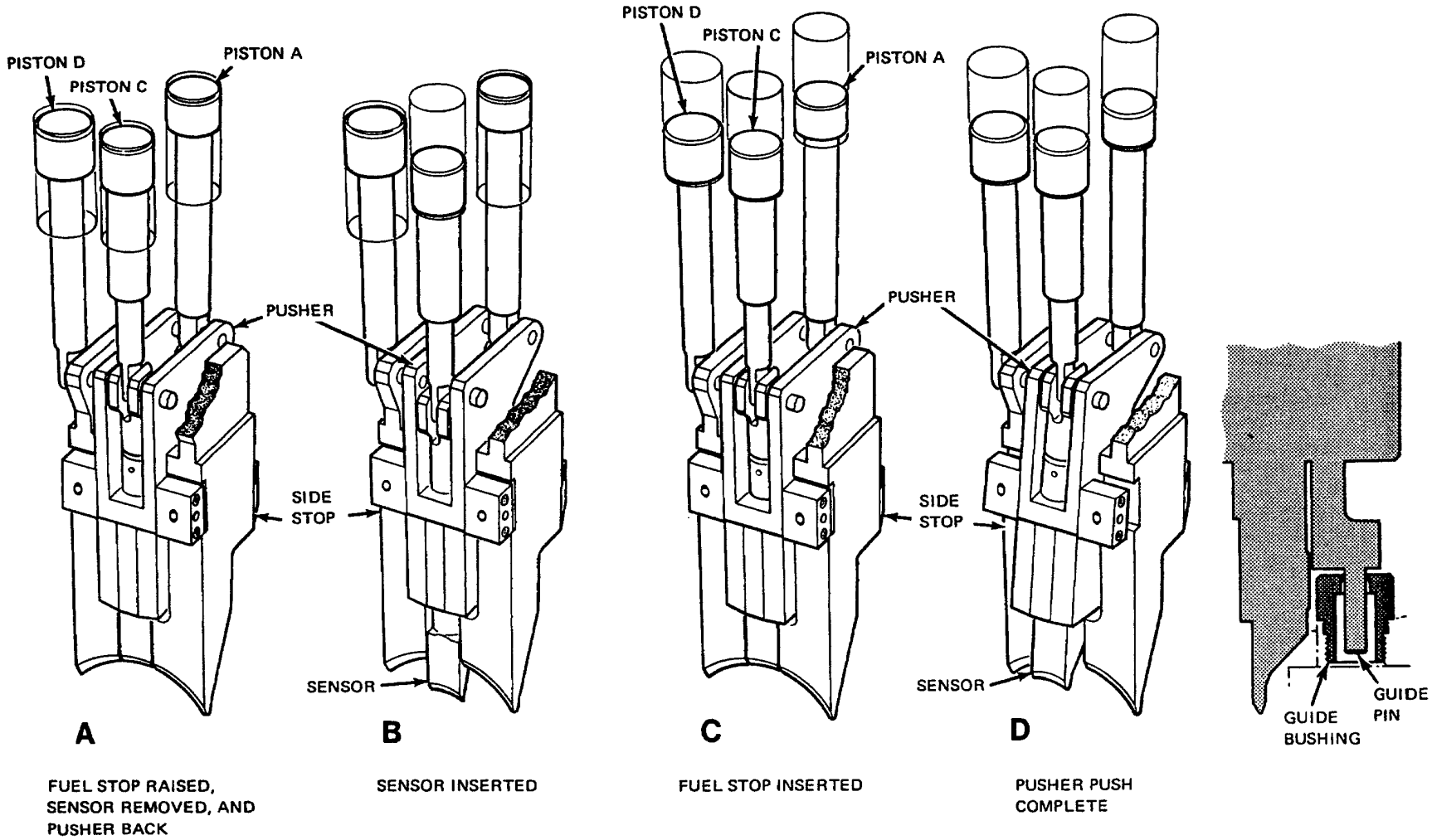

Figure A-28 Operation of Side Stop, Sensor and Pusher

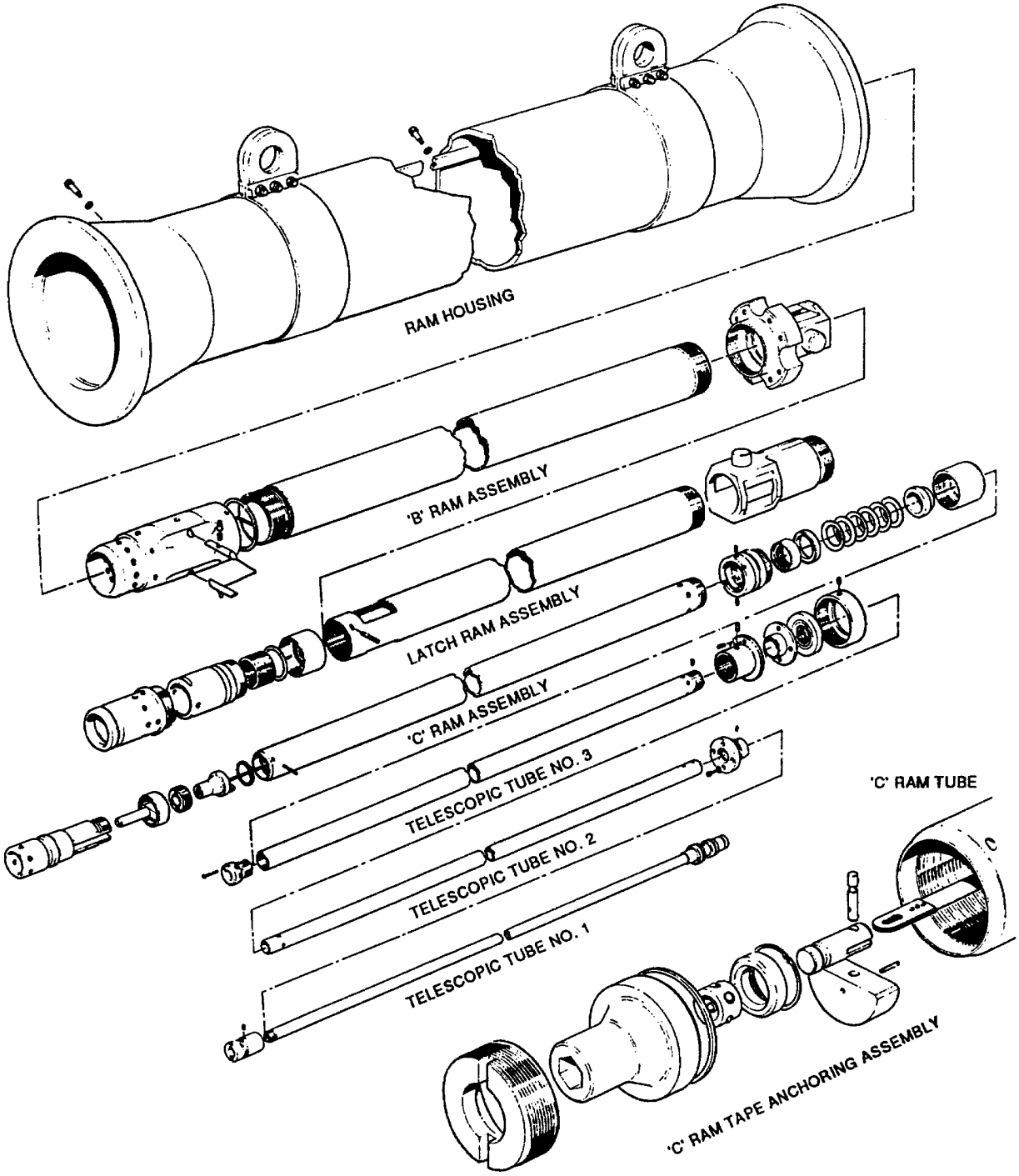

Figure A-29 Ram Assembly – Exploded View

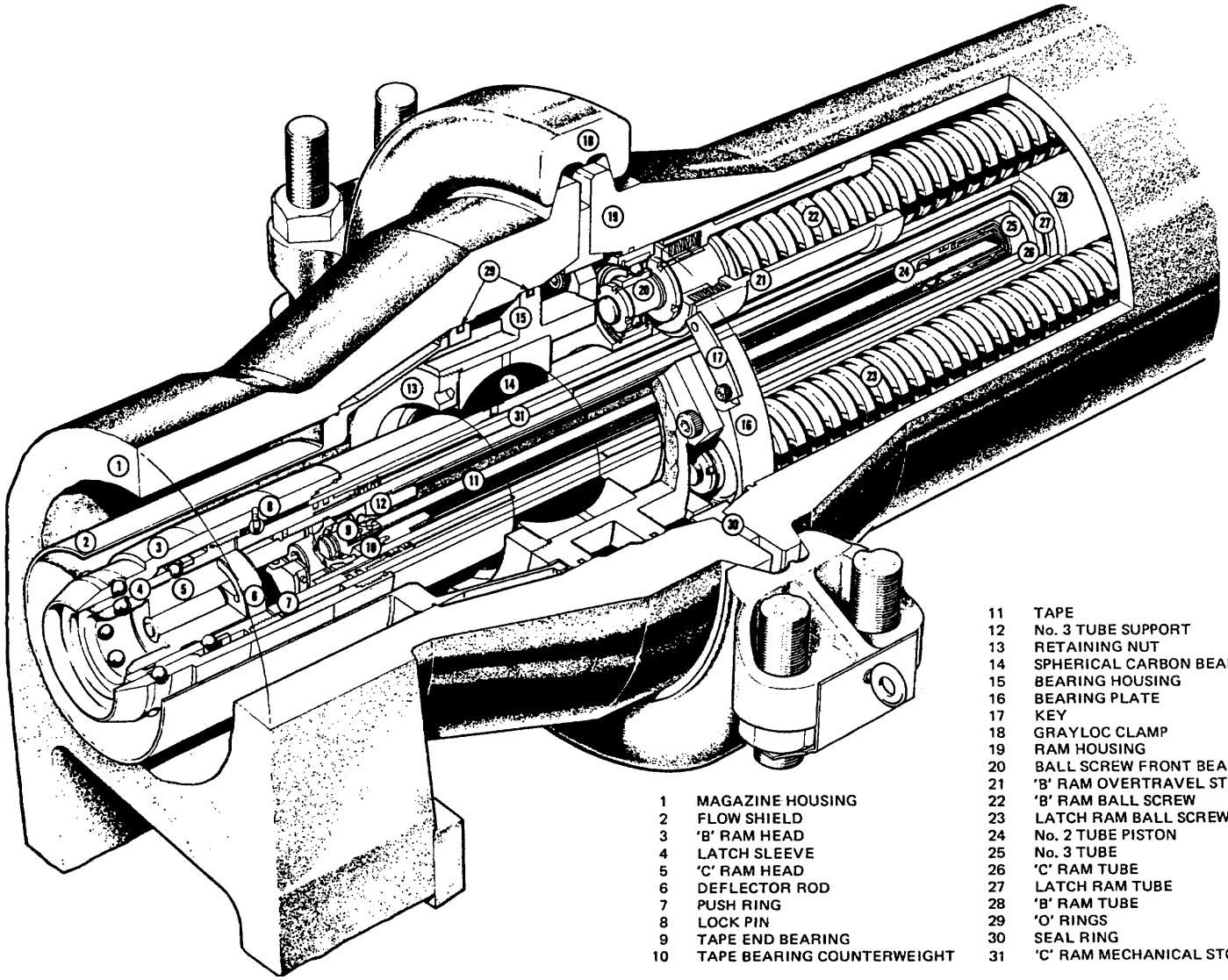

1 MAGAZINE HOUSING
2 FLOW SHIELD
3 'B' RAM HEAD
4 LATCH SLEEVE
5 'C' RAM HEAD
6 DEFLECTOR ROD
7 PUSH RING
8 LOCK PIN
9 TAPE END BEARING
10 TAPE BEARING COUNTERWEIGHT
11 TAPE
12 No. 3 TUBE SUPPORT
13 RETAINING NUT
14 SPHERICAL CARBON BEARING
15 BEARING HOUSING
16 BEARING PLATE
17 KEY
18 GRAYLOC CLAMP
19 RAM HOUSING
20 BALL SCREW FRONT BEARING
21 'B' RAM OVERTRAVEL STOP TUBE
22 'B' RAM BALL SCREW
23 LATCH RAM BALL SCREW
24 No. 2 TUBE PISTON
25 No. 3 TUBE
26 'C' RAM TUBE
27 LATCH RAM TUBE
28 'B' RAM TUBE
29 'O' RINGS
30 SEAL RING
31 'C' RAM MECHANICAL STOP

Figure A-30 Ram Assembly – Front End

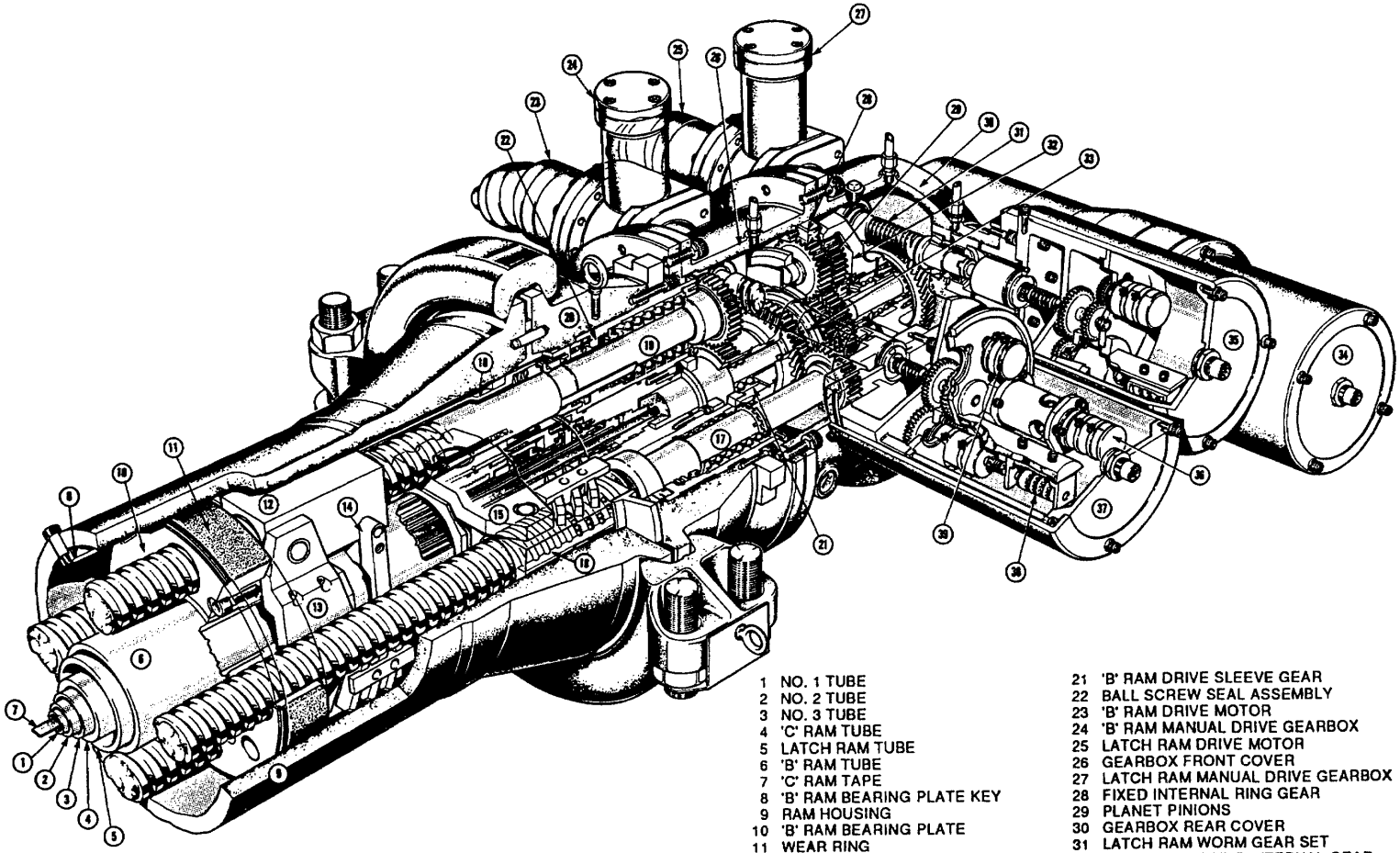

1 NO. 1 TUBE
2 NO. 2 TUBE
3 NO. 3 TUBE
4 'C' RAM TUBE
5 LATCH RAM TUBE
6 'B' RAM TUBE
7 'C' RAM TAPE
8 'B' RAM BEARING PLATE KEY
9 RAM HOUSING
10 'B' RAM BEARING PLATE
11 WEAR RING
12 'B' RAM UPPER BALL NUT
13 'B' RAM TRUNNION PLATE
14 'B' RAM BALL NUT SUPPORT LINKS
15 LATCH RAM TRUNNION PLATE
16 LATCH RAM BALL NUT
17 LATCH RAM BALL SCREW
18 'B' RAM RETRACT STOP
19 'B' RAM BALL SCREW
20 RAM REAR FORGING
21 'B' RAM DRIVE SLEEVE GEAR
22 BALL SCREW SEAL ASSEMBLY
23 'B' RAM DRIVE MOTOR
24 'B' RAM MANUAL DRIVE GEARBOX
25 LATCH RAM DRIVE MOTOR
26 GEARBOX FRONT COVER
27 LATCH RAM MANUAL DRIVE GEARBOX
28 FIXED INTERNAL RING GEAR
29 PLANET PINIONS
30 GEARBOX REAR COVER
31 LATCH RAM WORM GEAR SET
32 LATCH RAM DRIVE INTERNAL GEAR
33 DOUBLE ENDED CENTER GEAR
34 'C' RAM TAPE DRIVE ASSEMBLY
35 LATCH RAM POTENTIOMETER ASSEMBLY
36 COARSE POTENTIOMETERS
37 'B' RAM POTENTIOMETER ASSEMBLY
38 COUNTER
39 FINE POTENTIOMETER

Figure A-31 Ram Assembly – Rear End

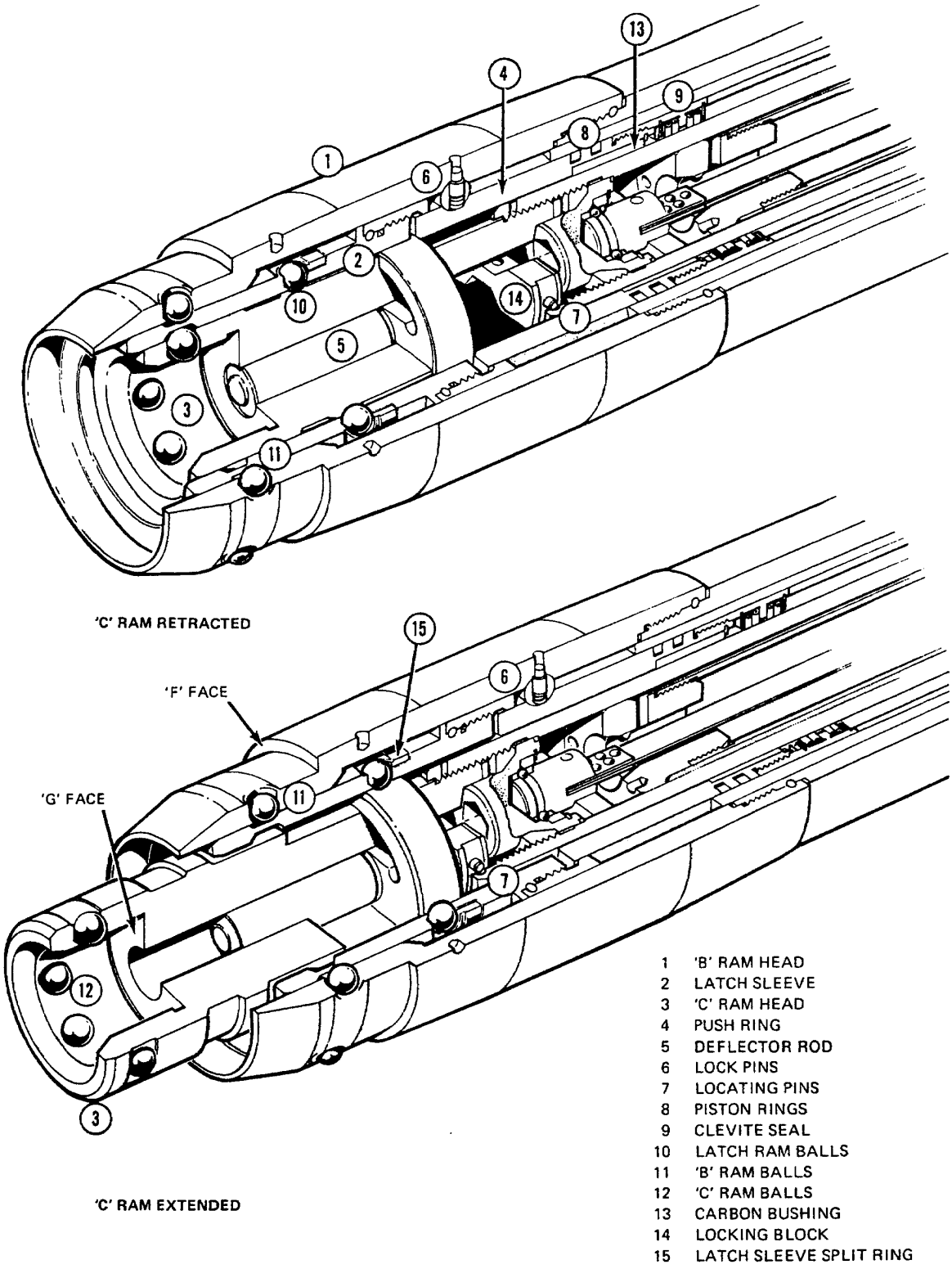

Figure A-32 Ram Head

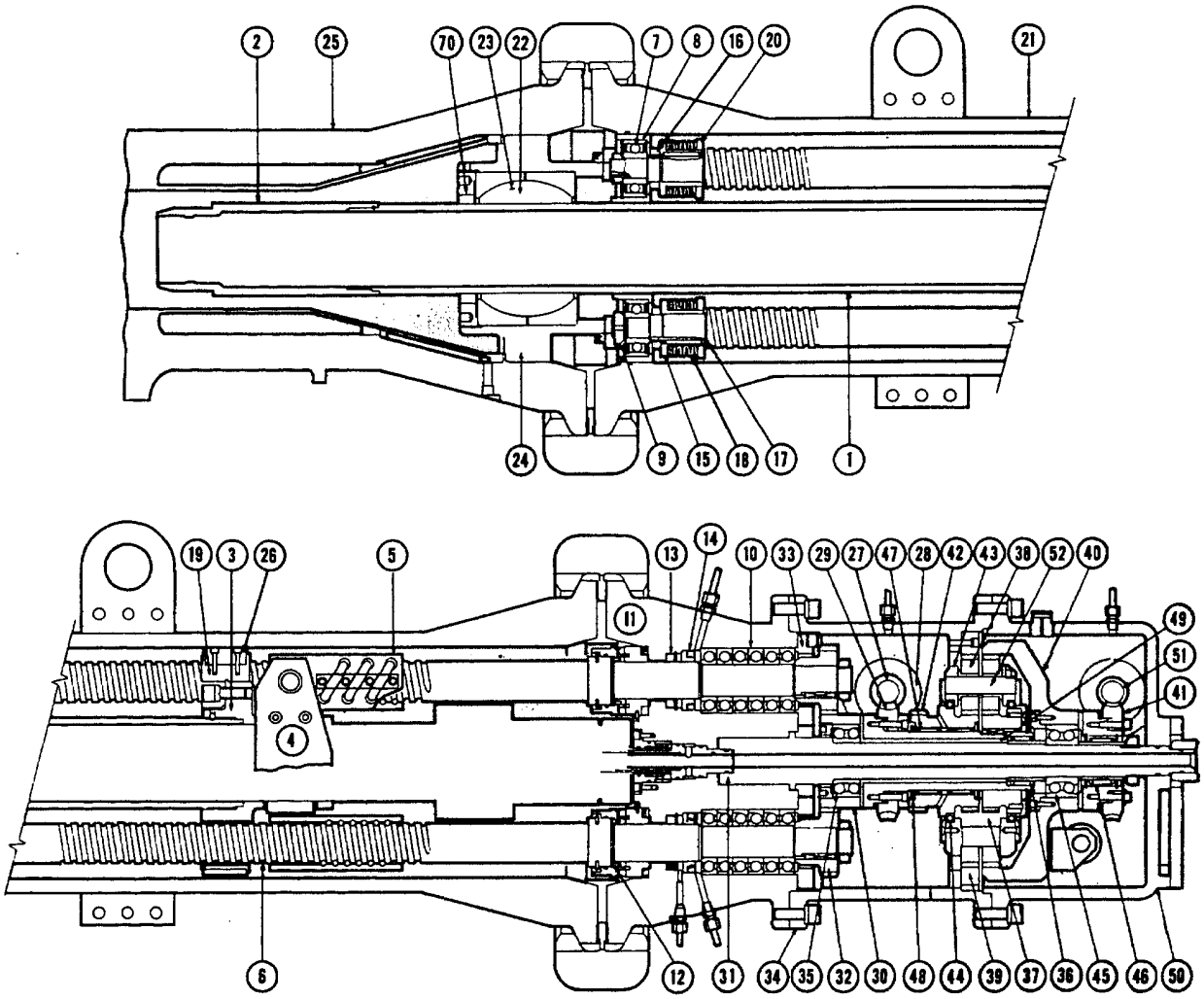

1 'B' RAM TUBE
2 'B' RAM HEAD
3 'B' RAM TRUNNION
4 TRUNNION PLATE
5 BALL SCREW NUT
6 'B' RAM BALL SCREW
7 BALL BEARING
8 BEARING PLATE
9 LOCK NUT
10 ANGULAR CONTACT BEARINGS
11 RAM REAR FORGING
12 BALL SCREW FACE SEAL
13 SEAL
14 OIL SEAL
15 OVERTRAVEL SLEEVE
16 LOCKNUT
17 OVERTRAVEL SPACER
18 BELLEVILLE WASHER SPRING
19 BEARING PLATE
20 OVERTRAVEL RING
21 RAM HOUSING
22 CARBON BEARING
23 CARBON BEARING RETAINER
24 BEARING HOUSING
25 MAGAZINE HOUSING
26 CARBON RING
27 WORM SHAFT
28 ROLLER BEARING
29 WORM GEAR
30 SLEEVE GEAR
31 GEAR BOX MAIN SHAFT
32 'B' RAM PINION
33 BEARING CAP
34 GEAR BOX FRONT COVER
35 DOUBLE ROW A/C BEARINGS
36 ROLLER BEARING
37 LATCH CENTRE GEAR
38 PLANET PINION GEARS
39 INTERNAL RING GEAR
40 INTERNAL GEAR
41 LATCH WORM GEAR
42 CENTRE DOUBLE GEAR
43 PLANET GEAR CARRIER
44 BALL BEARING
45 DOUBLE ROW A/C BEARINGS
46 ROLLER BEARINGS
47 NEEDLE BEARING
48 THRUST BEARING
49 SPACER RING
50 GEAR BOX REAR COVER
51 LATCH WORM SHAFT
52 PLANET PINIONS SHAFT
70 BEARING RETAINER PLATE

Figure A-33 'B' Ram and Mechanical Drive

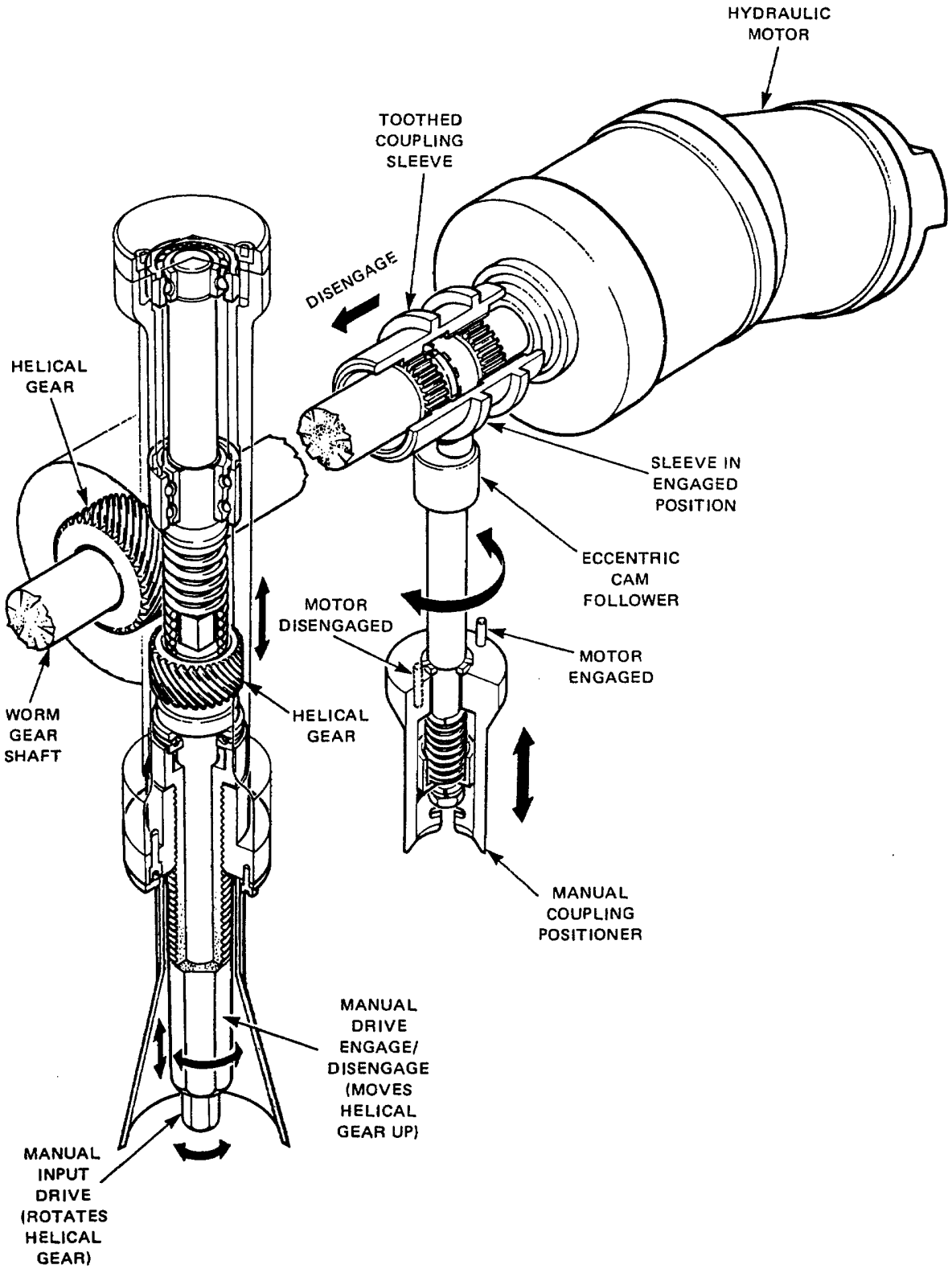

Figure A-34 'B' Ram/Latch Ram Manual Drive Assembly

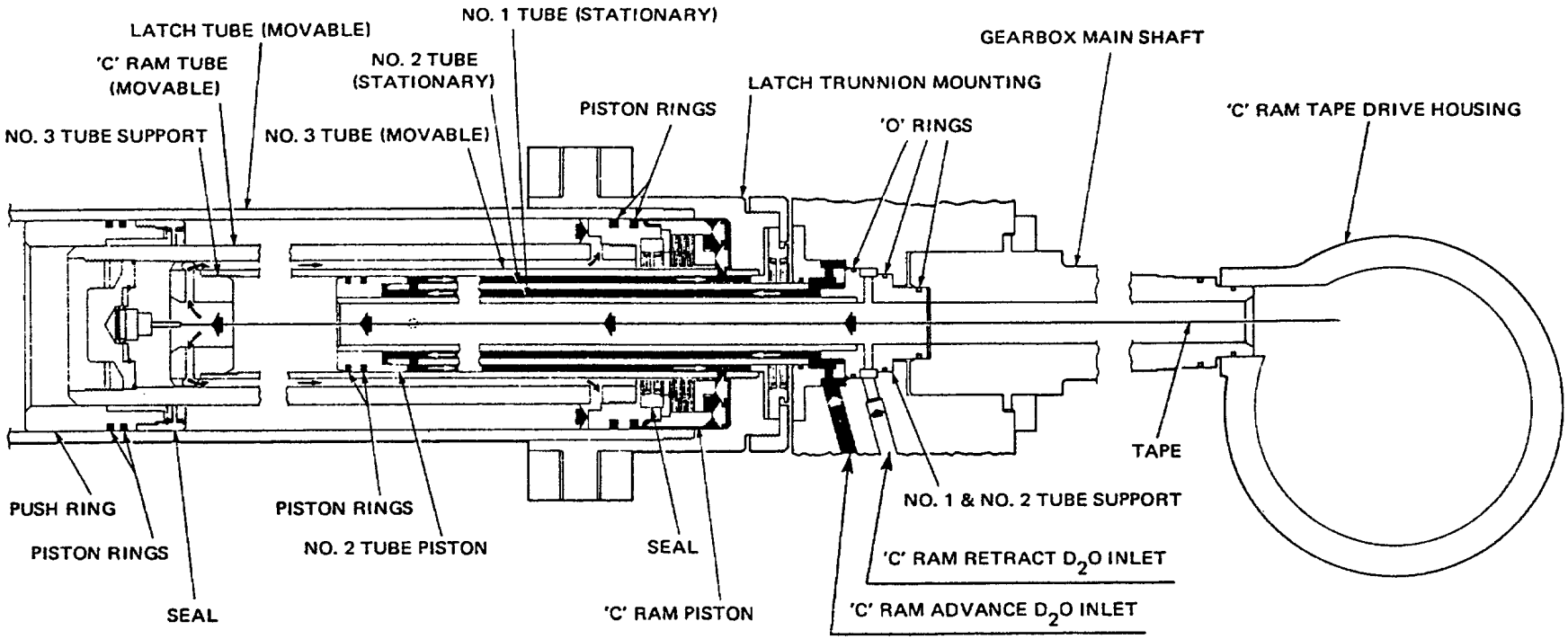

Figure A-35 Hydraulic 'C' Ram and Drive (Schematic)

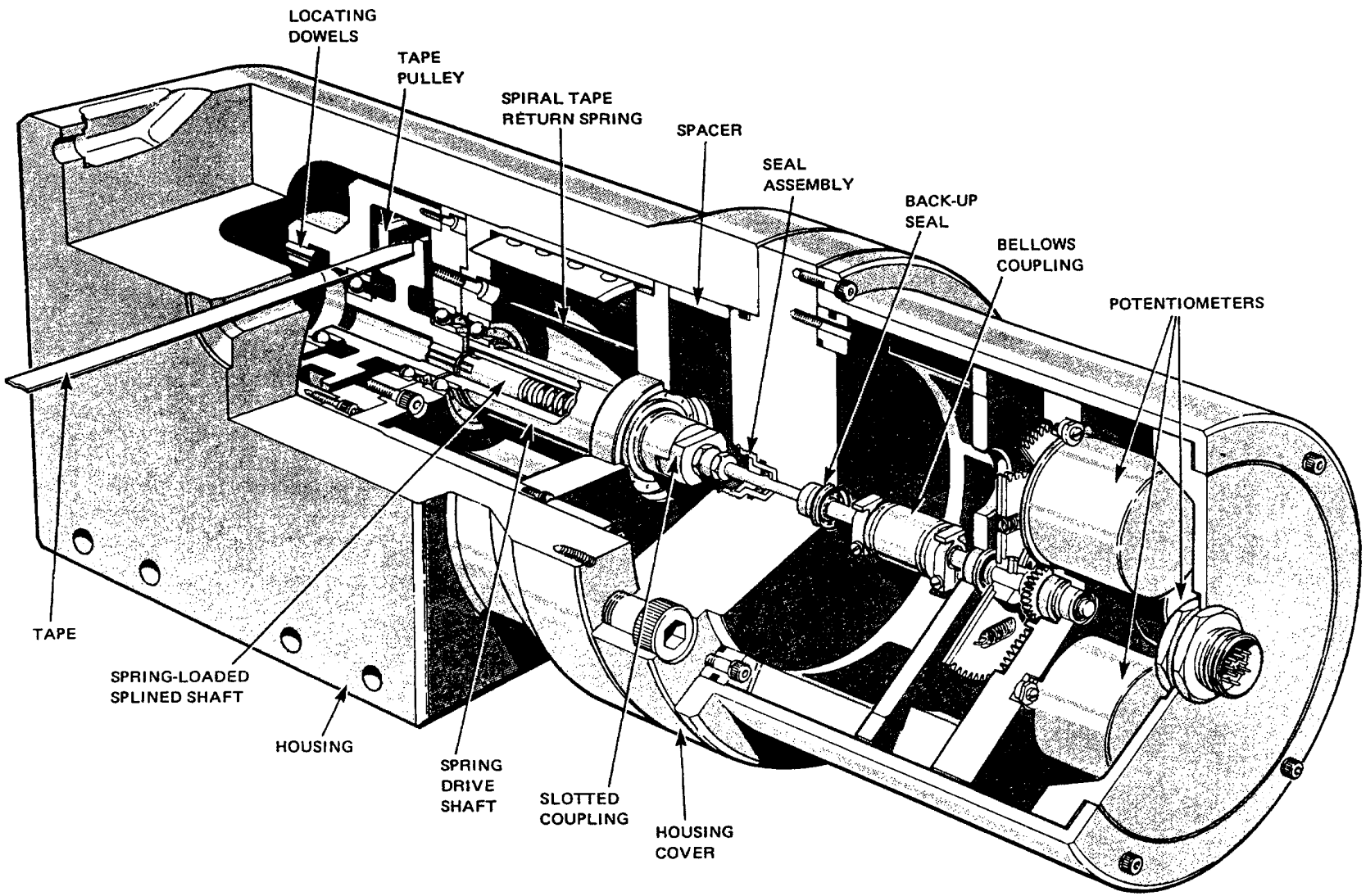

Figure A-36 Fueling Machine 'C' Ram Tape Drive Assembly

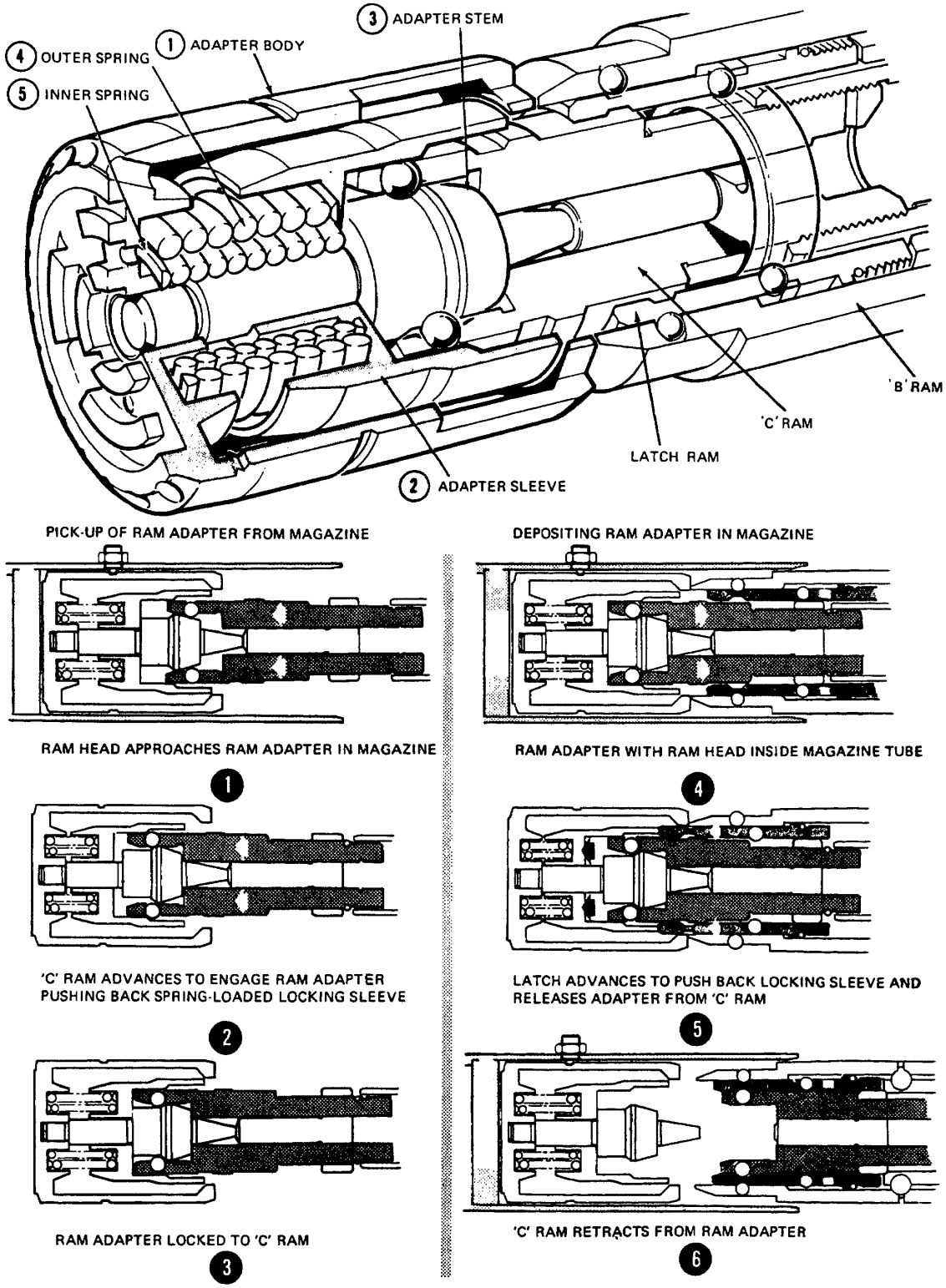

Figure A-37 Ram Adapter and Operation

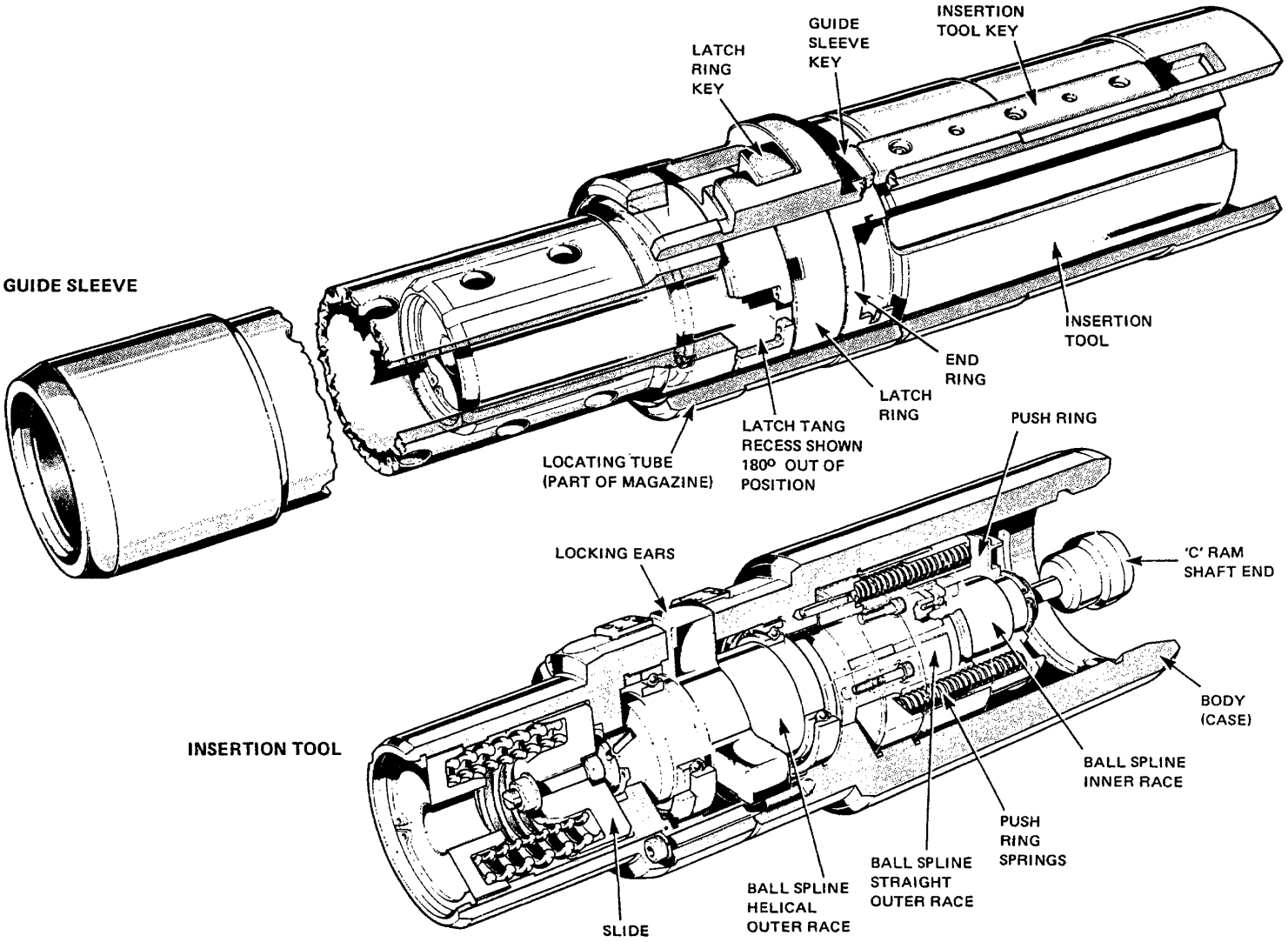

Figure A-38 Guide Sleeve and Insertion Tool

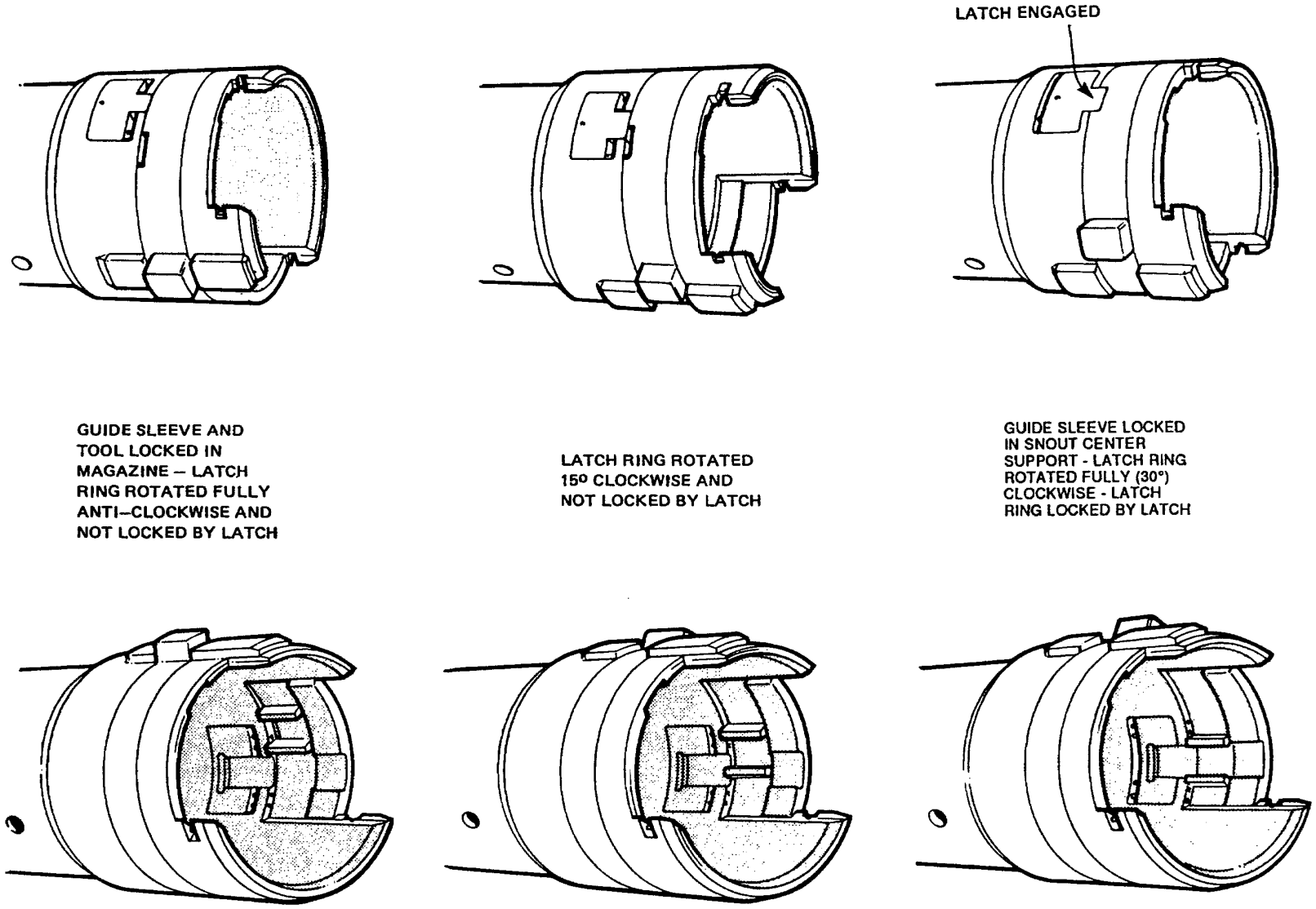

Figure A-39 Guide Sleeve Latch Ring Operation

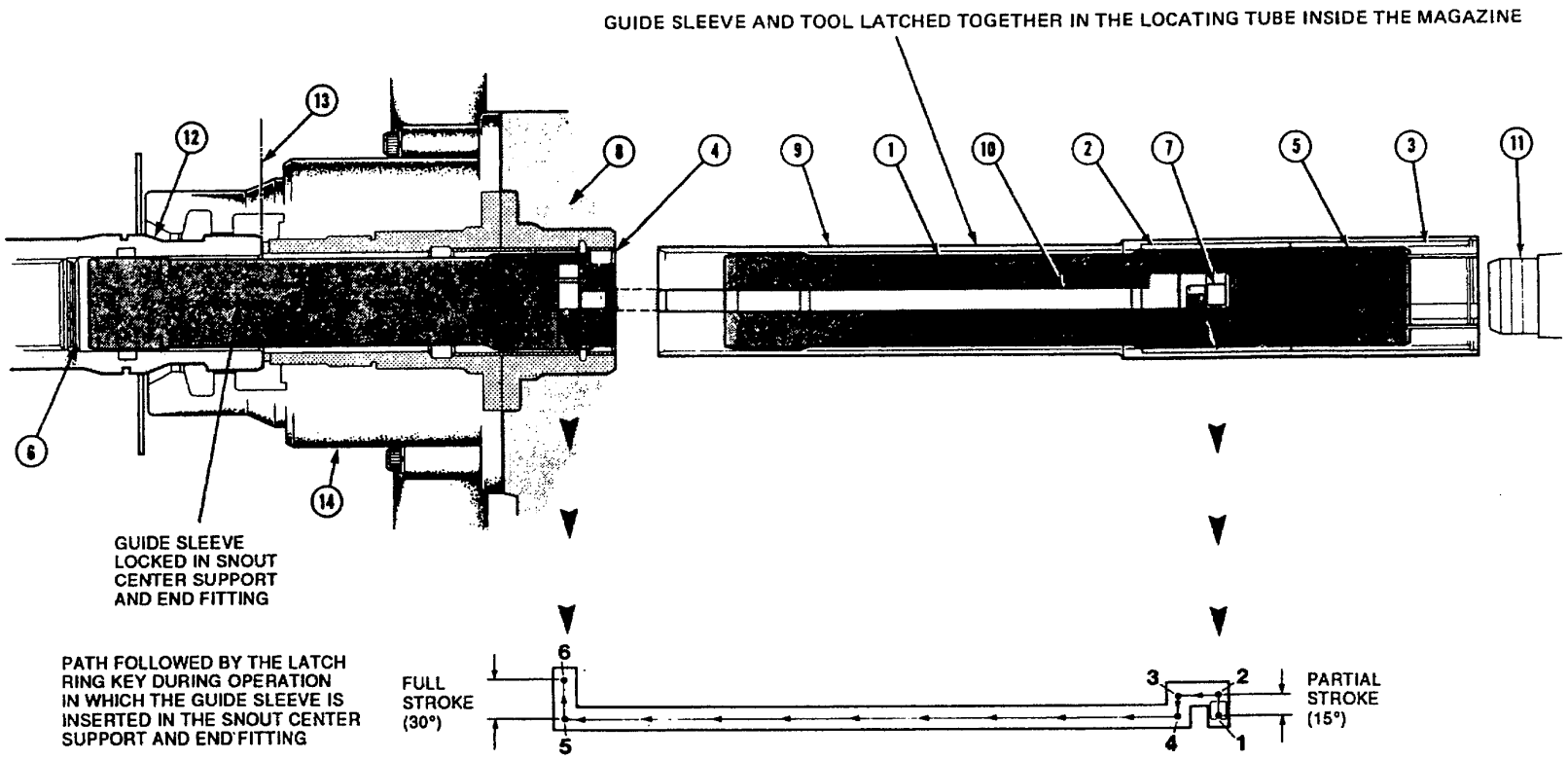

1	GUIDE SLEEVE	8	MAGAZINE END COVER
2	GUIDE SLEEVE LOCATING TUBE	9	MAGAZINE TUBE
3	LOCATING TUBE SPACER	10	MAGAZINE TUBE SLOT
4	SNOUT CENTER SUPPORT	11	'B' RAM HEAD
5	GUIDE SLEEVE INSERTION TOOL	12	END FITTING
6	SEAL FACE	13	END FITTING DATUM FACE
7	LATCH RING KEY	14	SNOUT

(FRONT PORTION OF TOOL IS POSITIONED INSIDE THE GUIDE SLEEVE)

Figure A-40 Guide Sleeve and Tool Positions

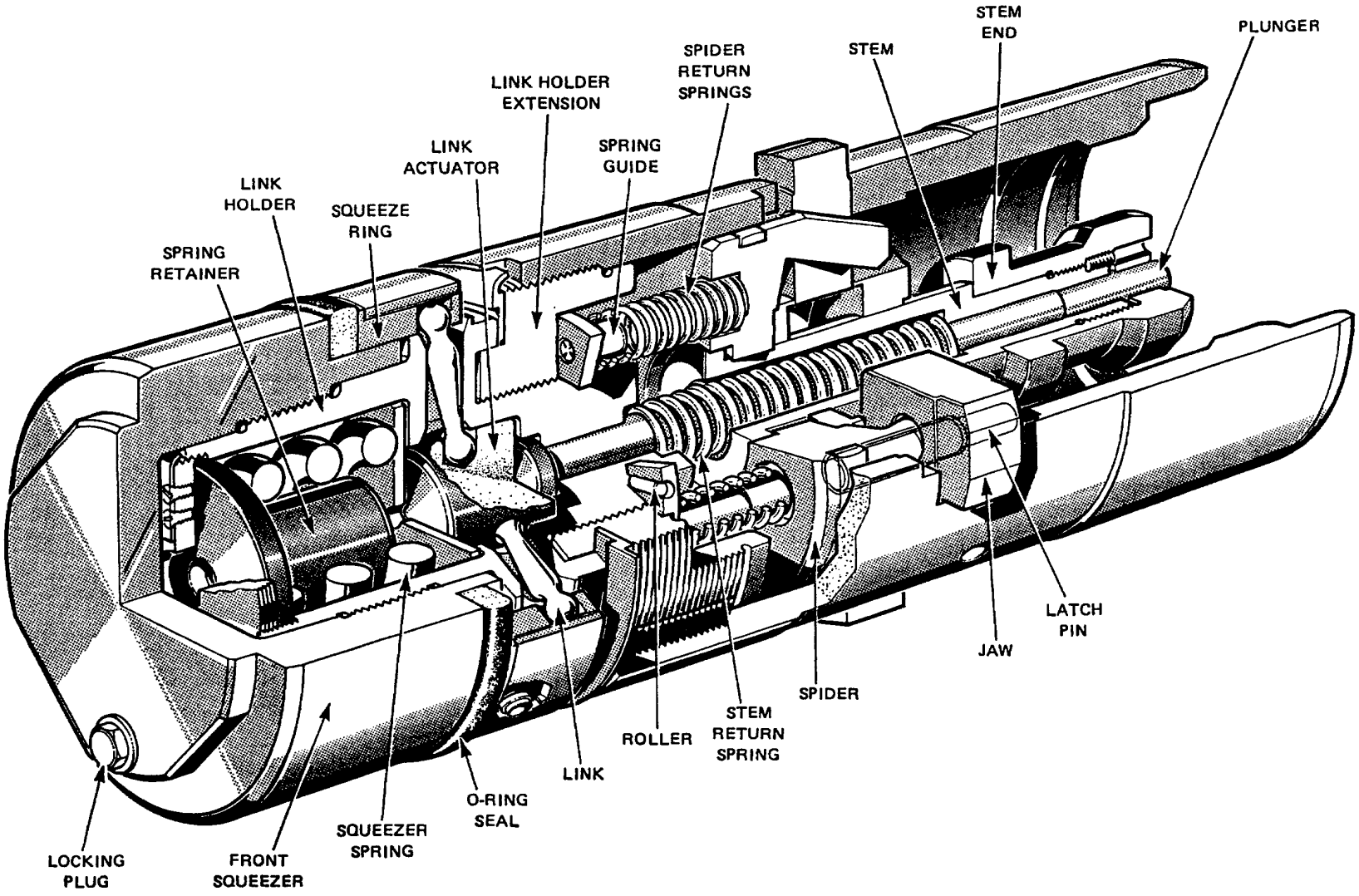

Figure A-41 Snout Plug

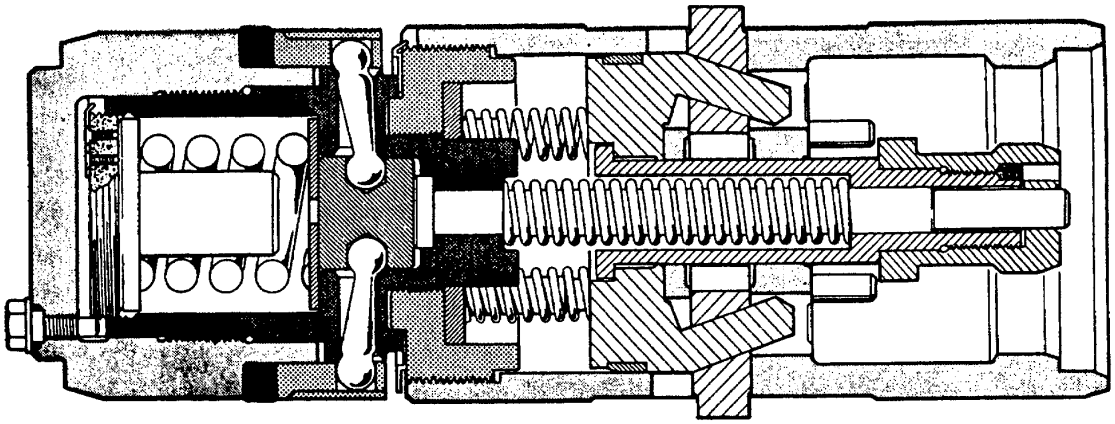

SNOUT PLUG WITH JAWS EXTENDED AND O-RING SEAL COMPRESSED

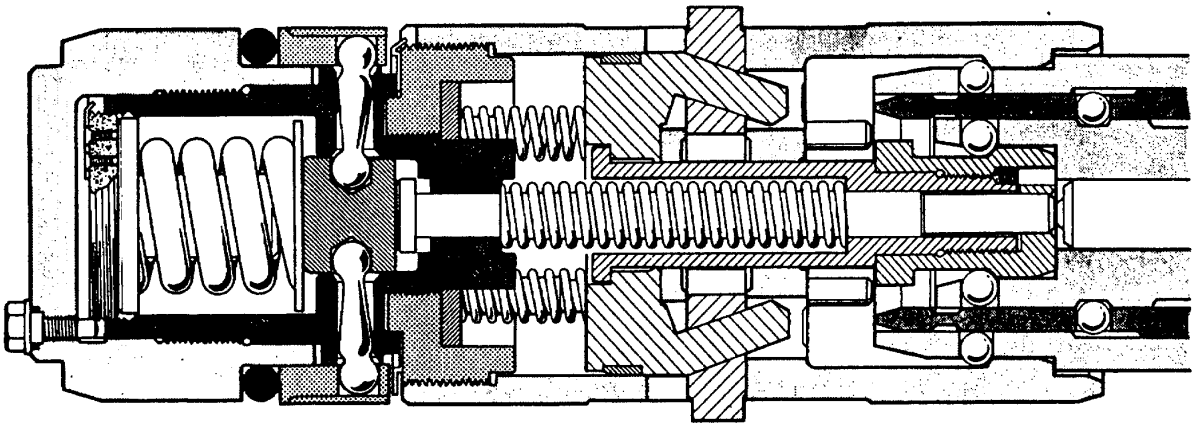

SNOUT PLUG WITH JAWS EXTENDED AND PLUNGER DEPRESSED TO RELAX THE O-RING

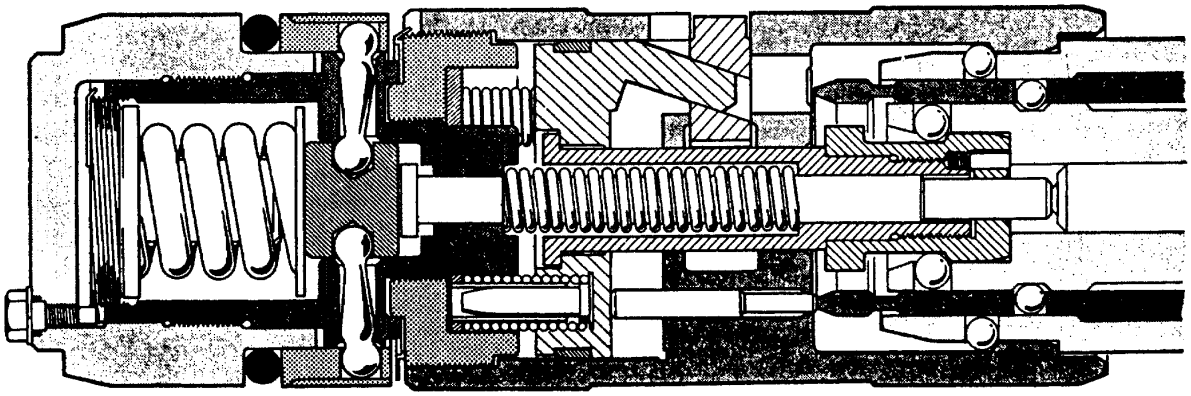

SNOUT PLUG ON THE FUELING MACHINE RAM, WITH THE LATCH RAM ADVANCED 3.38 cm (1.33 in) TO DEPRESS THE SPIDER, VIA THE LATCH PINS, AND RETRACT THE JAWS. THE O-RING SEAL IS RELAXED BY THE ACTION OF THE DEFLECTOR ROD ON THE PLUNGER

Figure A-42 Operation of Snout Plug

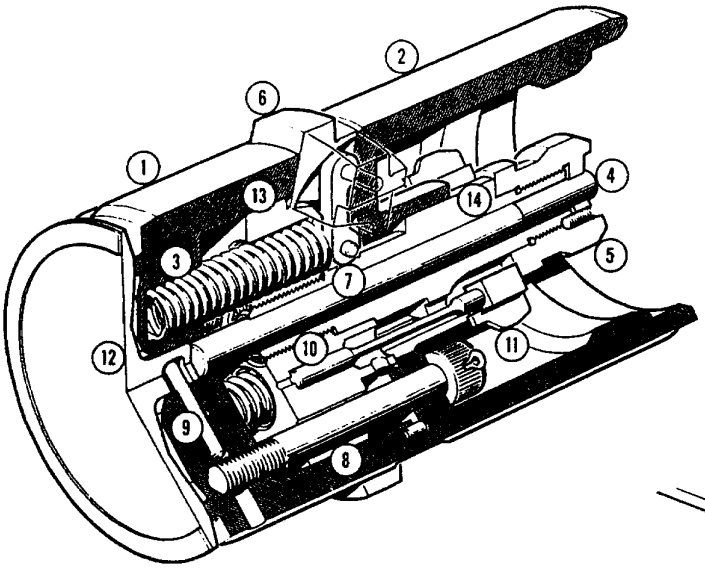

1 FRONT HOUSING
2 REAR HOUSING
3 SPRING
4 PLUNGER
5 STEM END
6 JAW
7 TOGGLE
8 CAP SCREW
9 SEAL DISC PIN
10 SAFETY LATCH SPRING
11 SAFETY LATCH
12 SEAL DISC
13 SPIDER
14 STEM

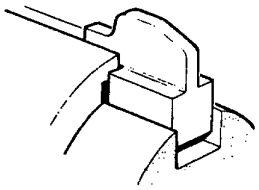

SAFETY LATCH LOCKED
VIEW 2

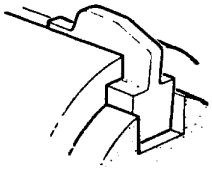

SAFETY LATCH UNLOCKED
VIEW 3

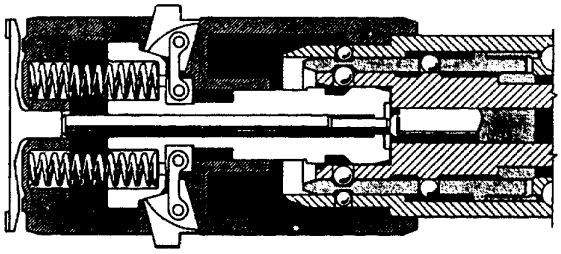

1 SECTION SHOWING THE JAWS AND SPIDER SPRINGS. THE RAM ASSEMBLY HAS JUST CONTACTED THE REAR HOUSING, ADVANCING THE SEAL DISC 0.89 mm (0.035 in)

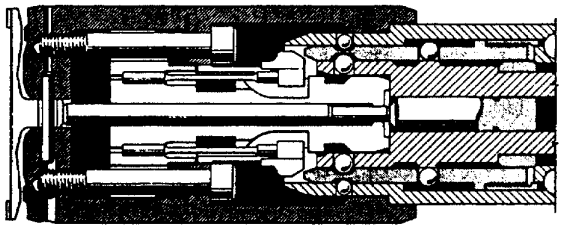

2 SECTION SHOWING THE SAFETY MECHANISM AND THE CAP SCREWS. THE SAFETY LATCHES ARE IN THIER LOCKED POSITION PREVENTING THE ACCIDENTAL DEPRESSION OF THE STEM

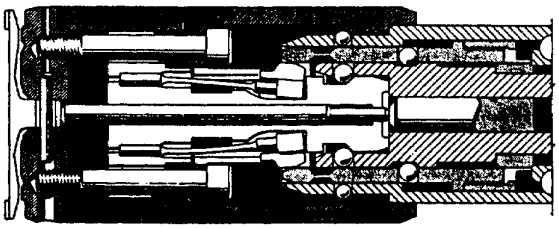

3 HERE THE LATCH RAM HAS ADVANCED 12.7 mm (0.500 in) TO UNLOCK THE SAFETY MECHANISM BY PUSHING THE TWO SAFETY LATCHES INWARD

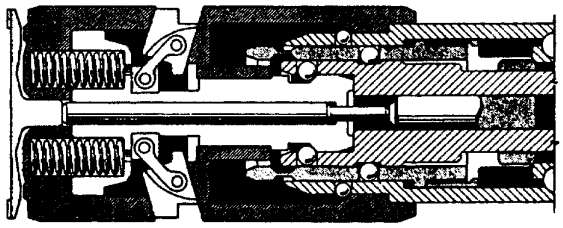

4 THE LATCH RAM AND 'C' RAM HAVE BOTH MOVED A FURTHER 21 mm (0.830 in) TO COMPLETELY RETRACT THE FOUR JAWS

Figure A-43 Coolant Channel Closure

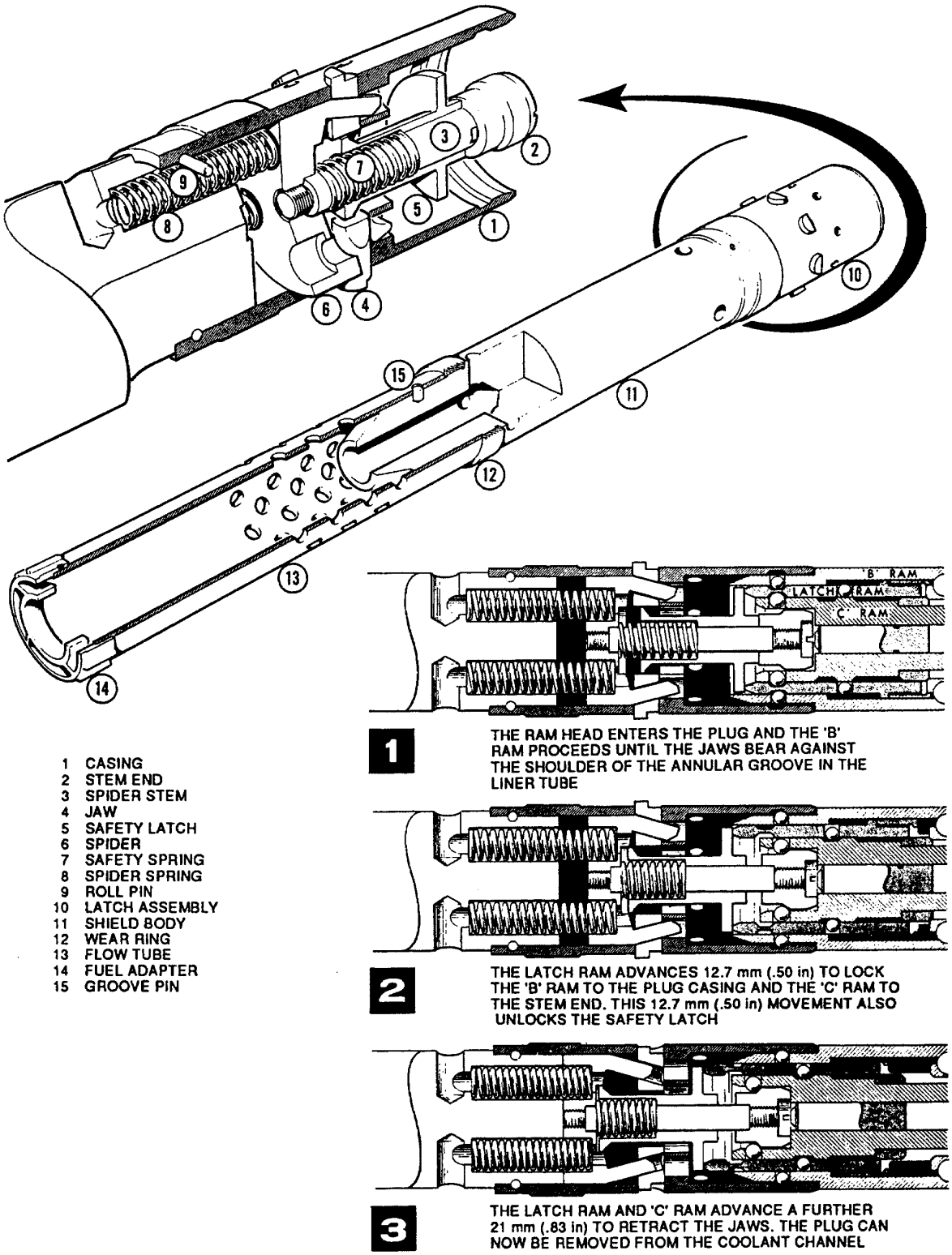

Figure A-44 Coolant Channel Shield Plug

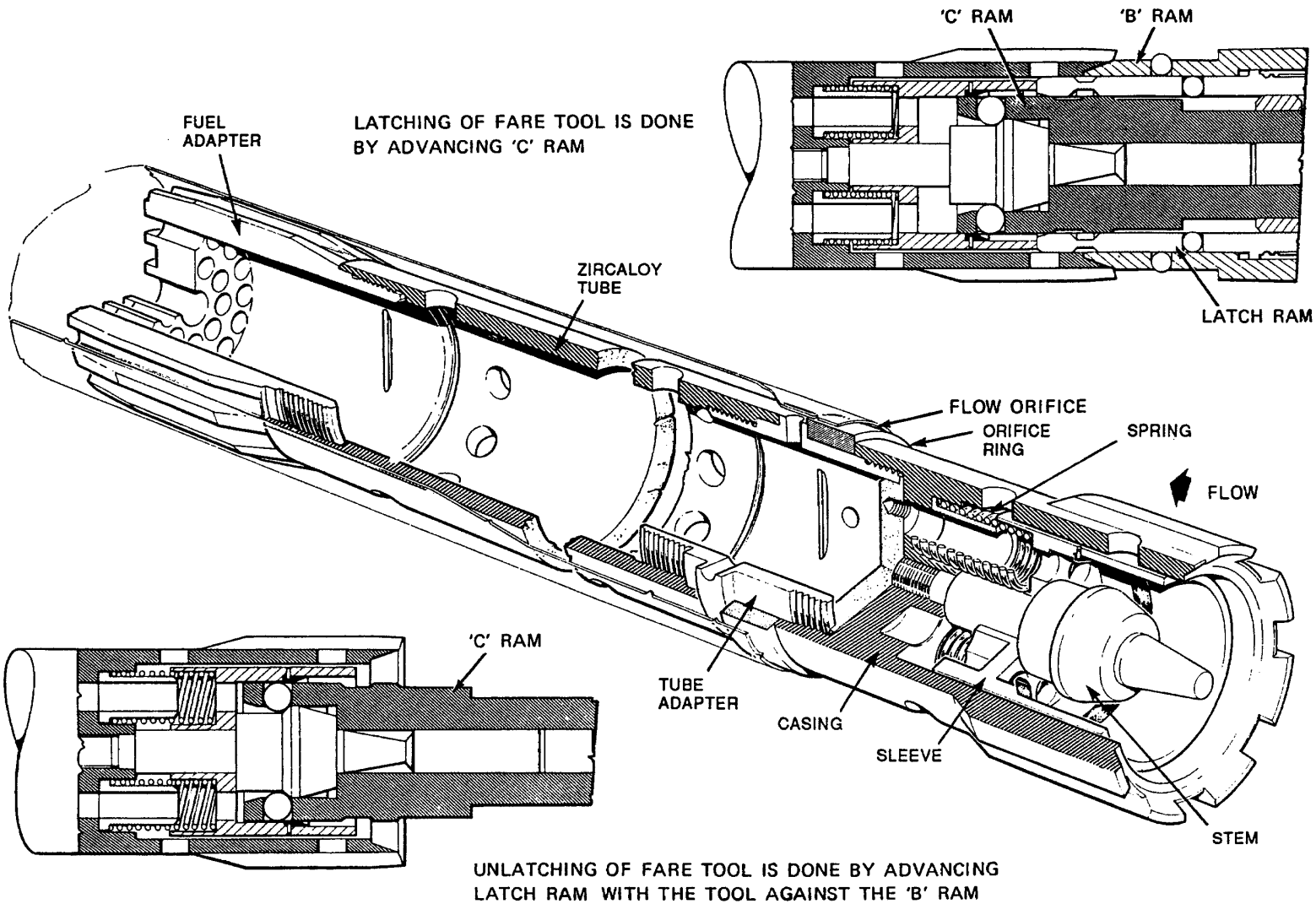

Figure A-45 FARE Tool Assembly

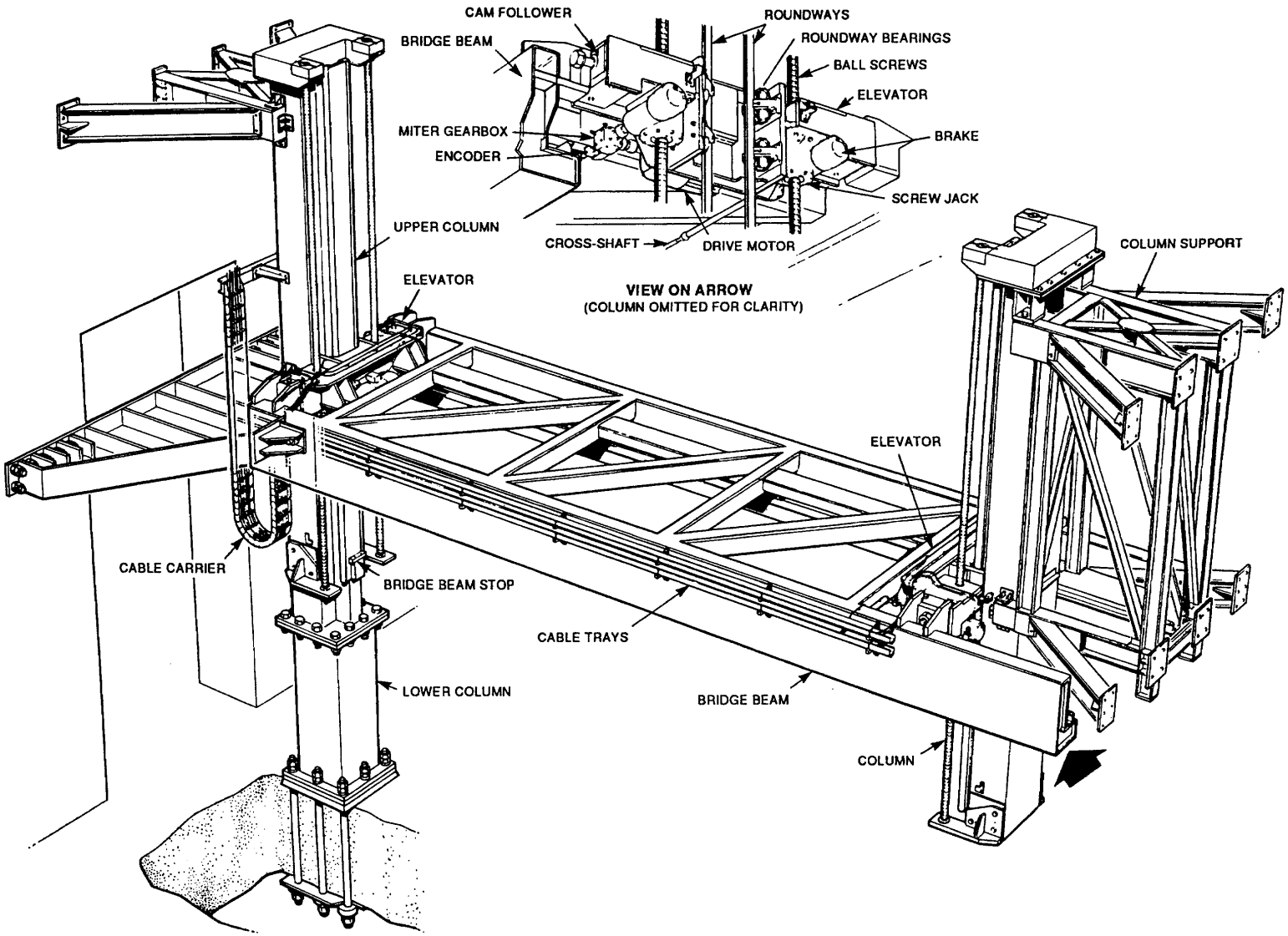

Figure A-46 Fueling Machine Bridge Assembly

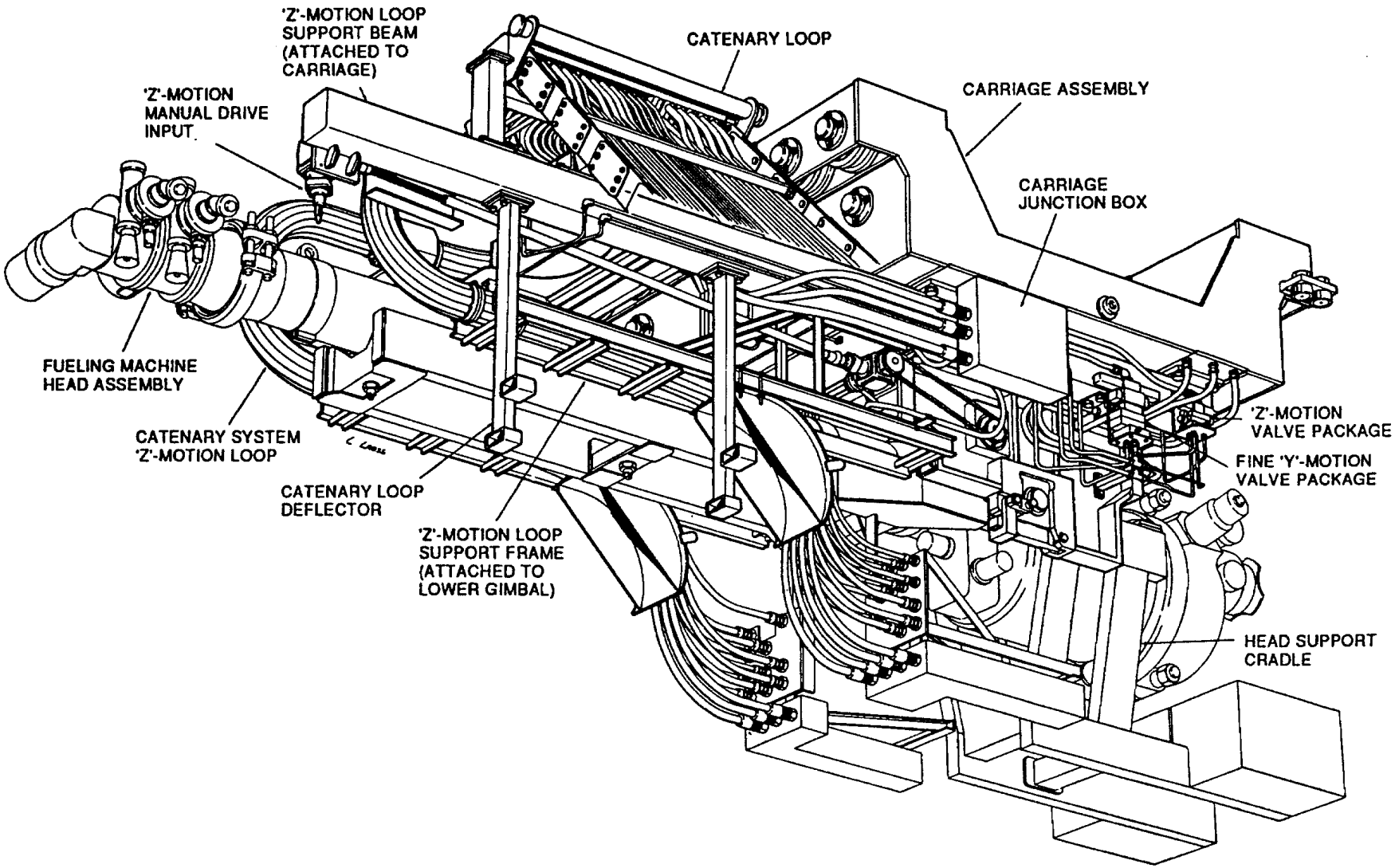

Figure A-47 Carriage/Fueling Machine Assembly

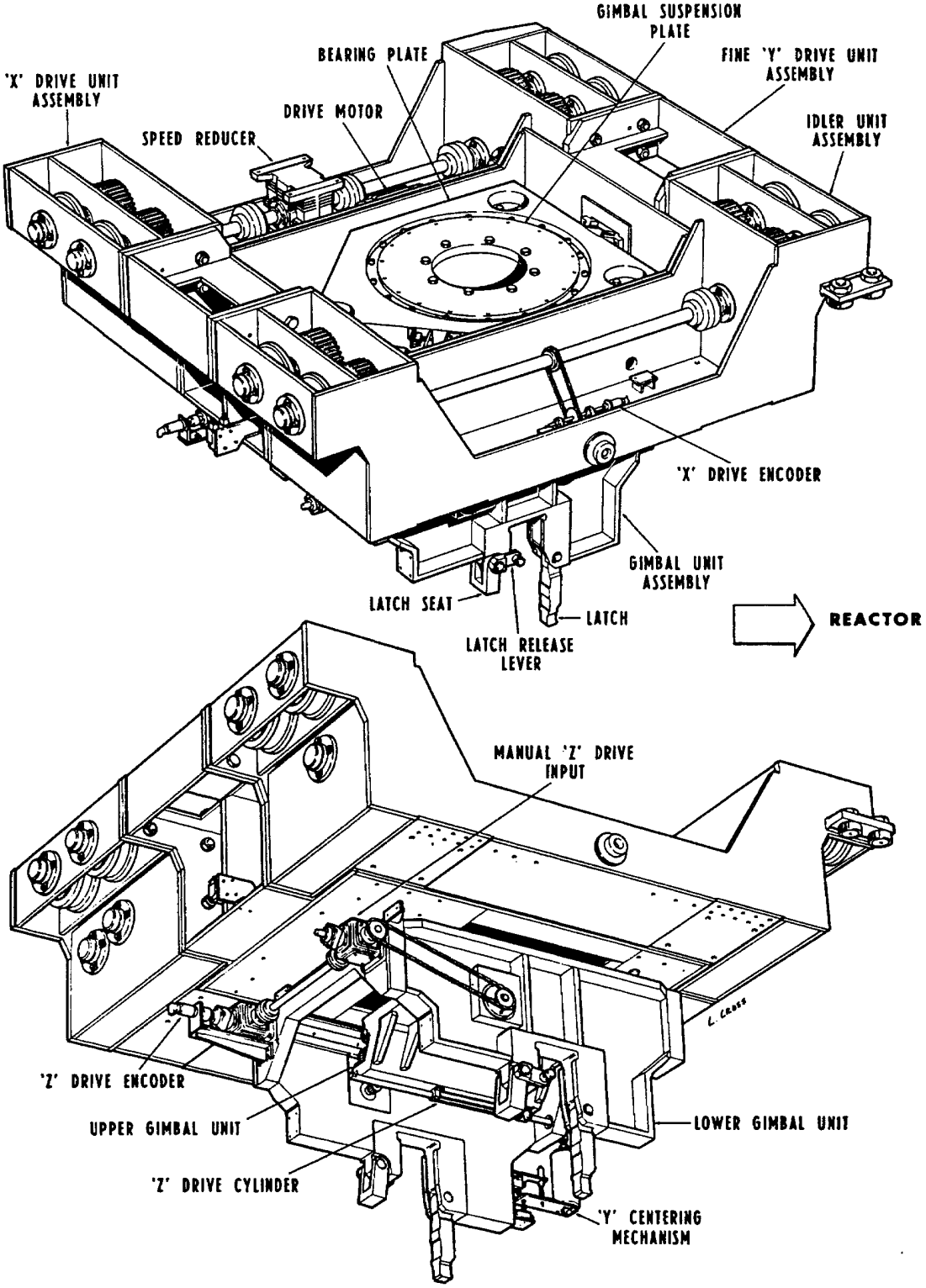

Figure A-48 Fueling Machine Carriage Assembly

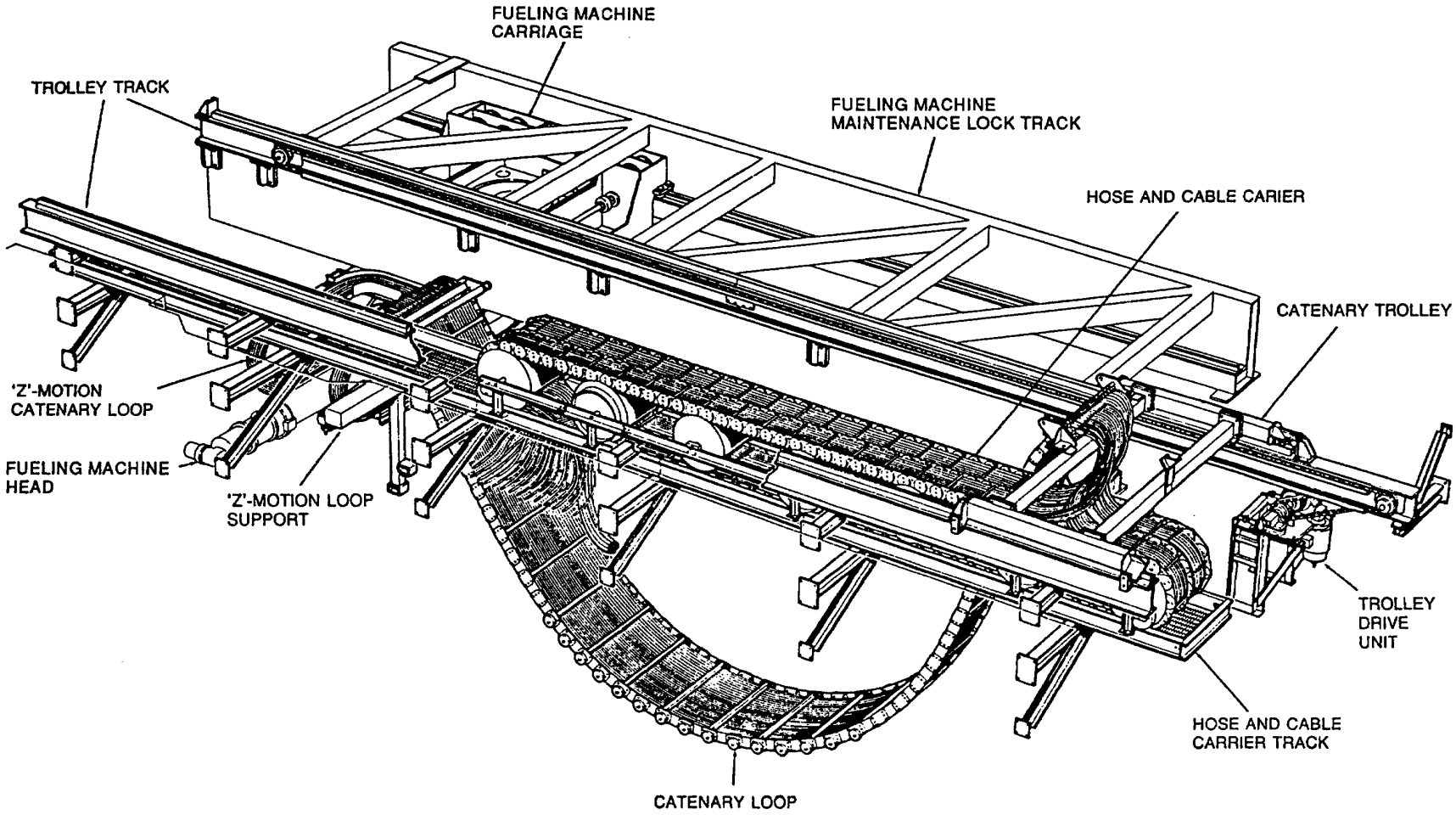

Figure A-49 Catenary System Assembly

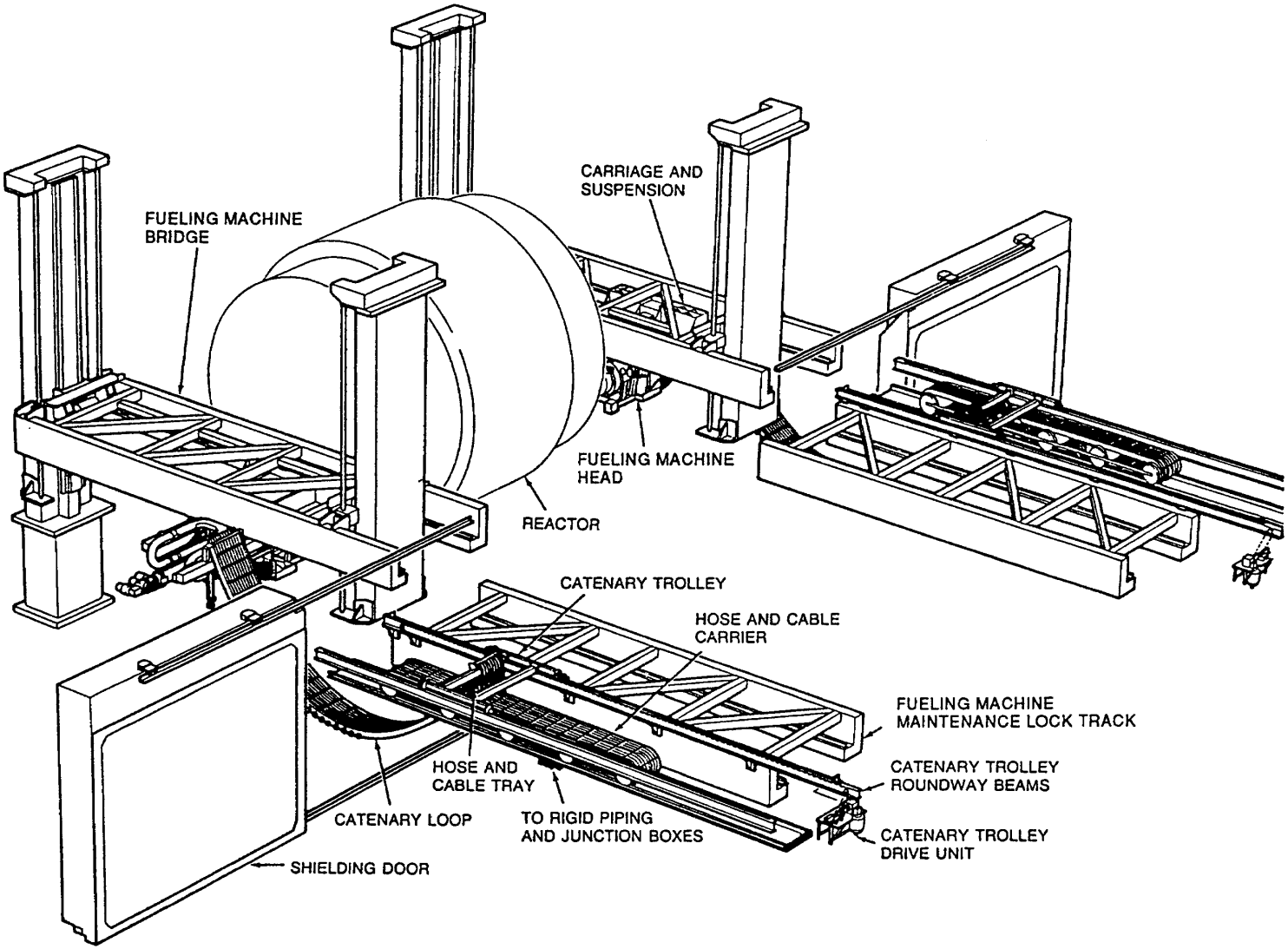

Figure A-50 General Arrangement of Fueling Machine Bridge, Carriage and Catenary

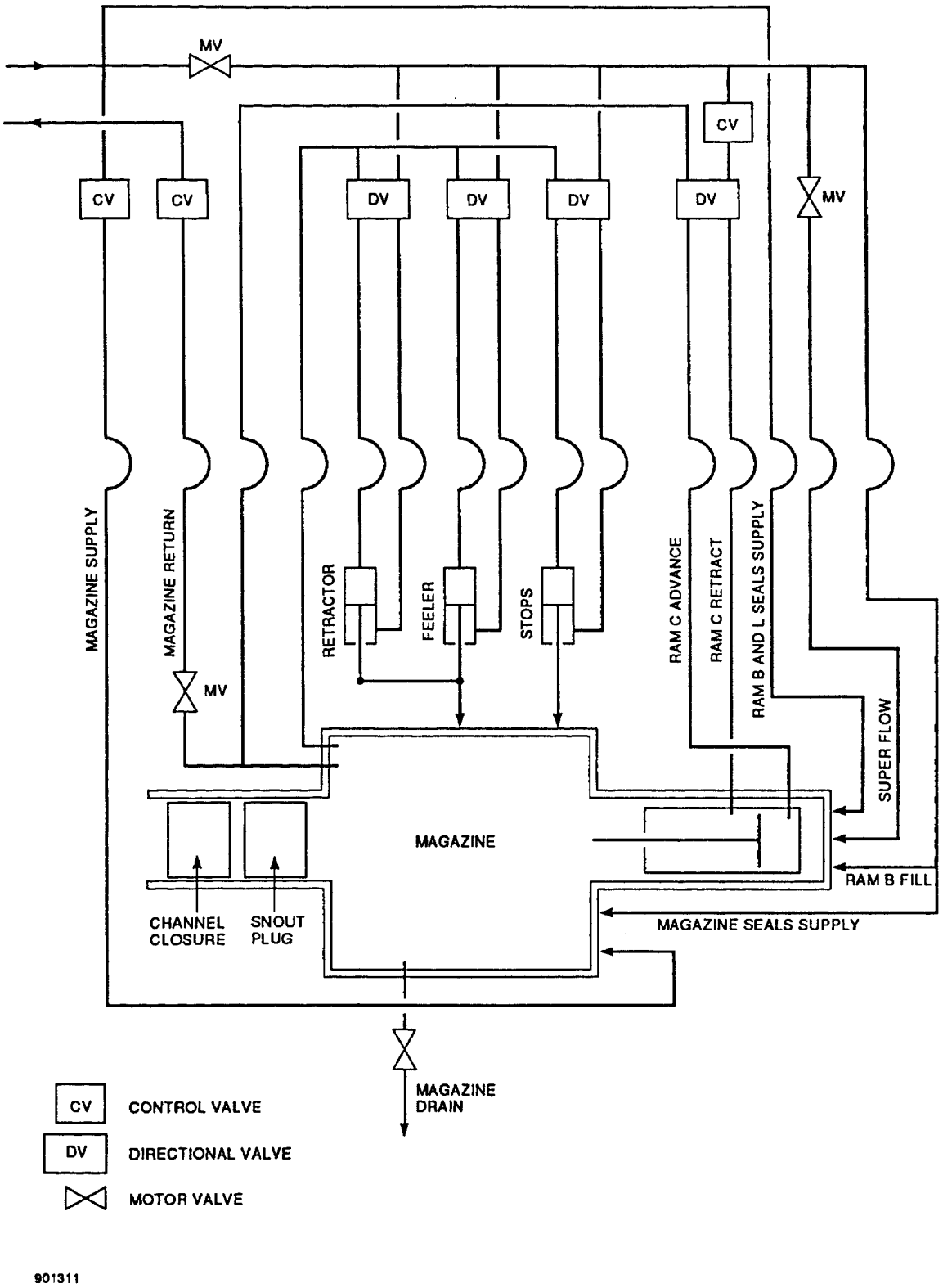

Figure A-51 Fueling Machine D_2O System Basic Flow

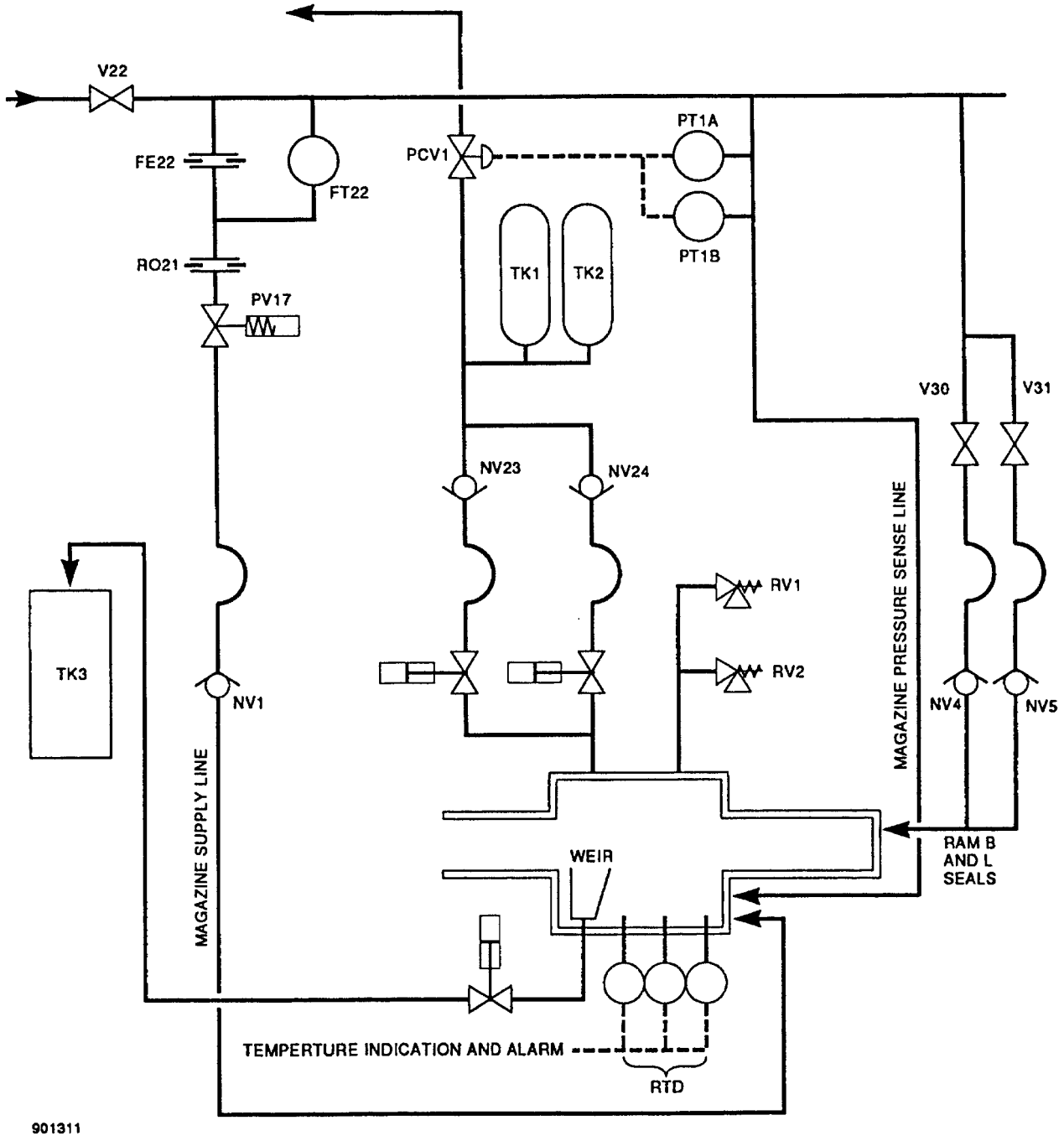

Figure A-52 Fueling Machine Magazine Supply Line

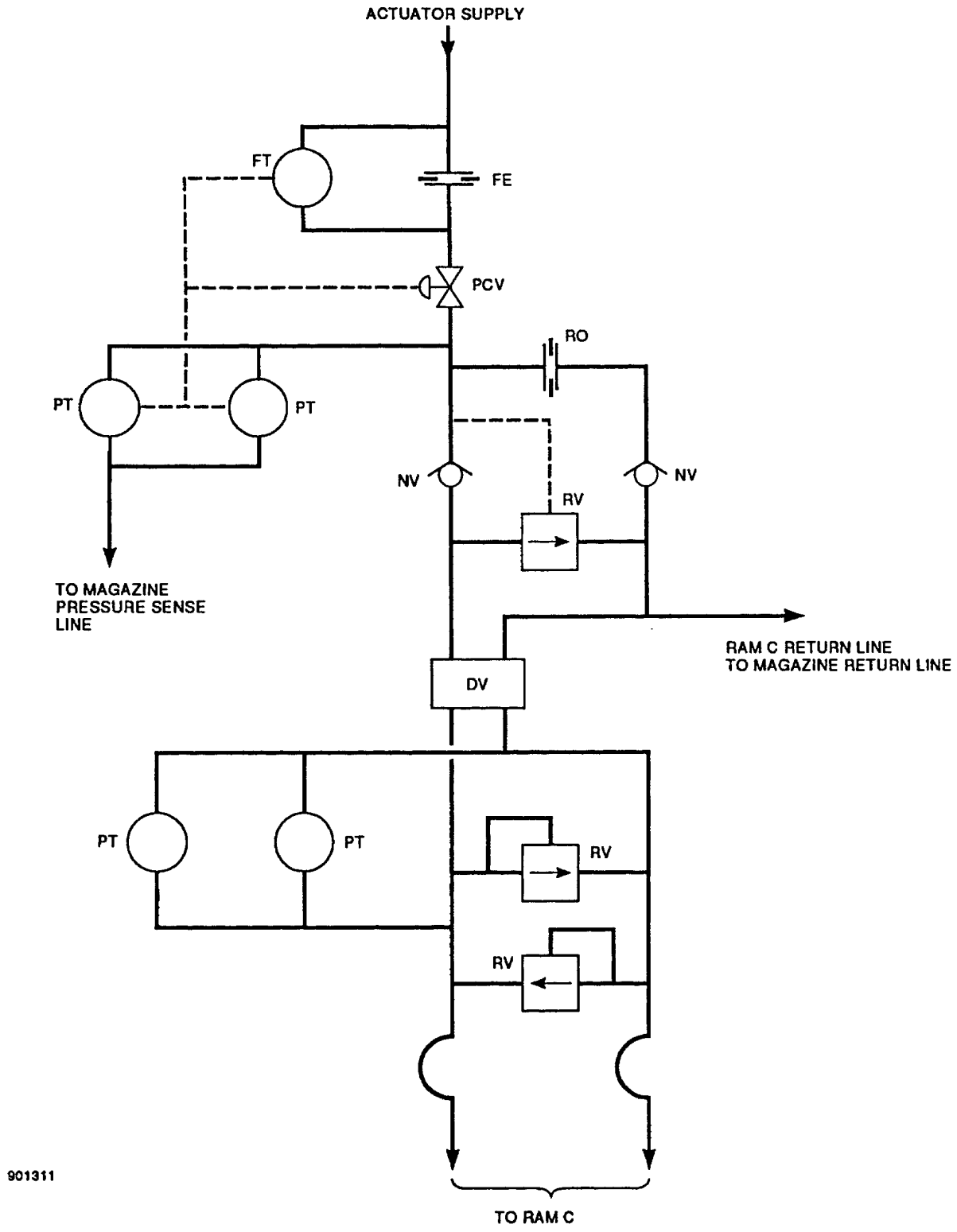

Figure A-53 Fueling Machine Ram C Hydraulic Control Circuit

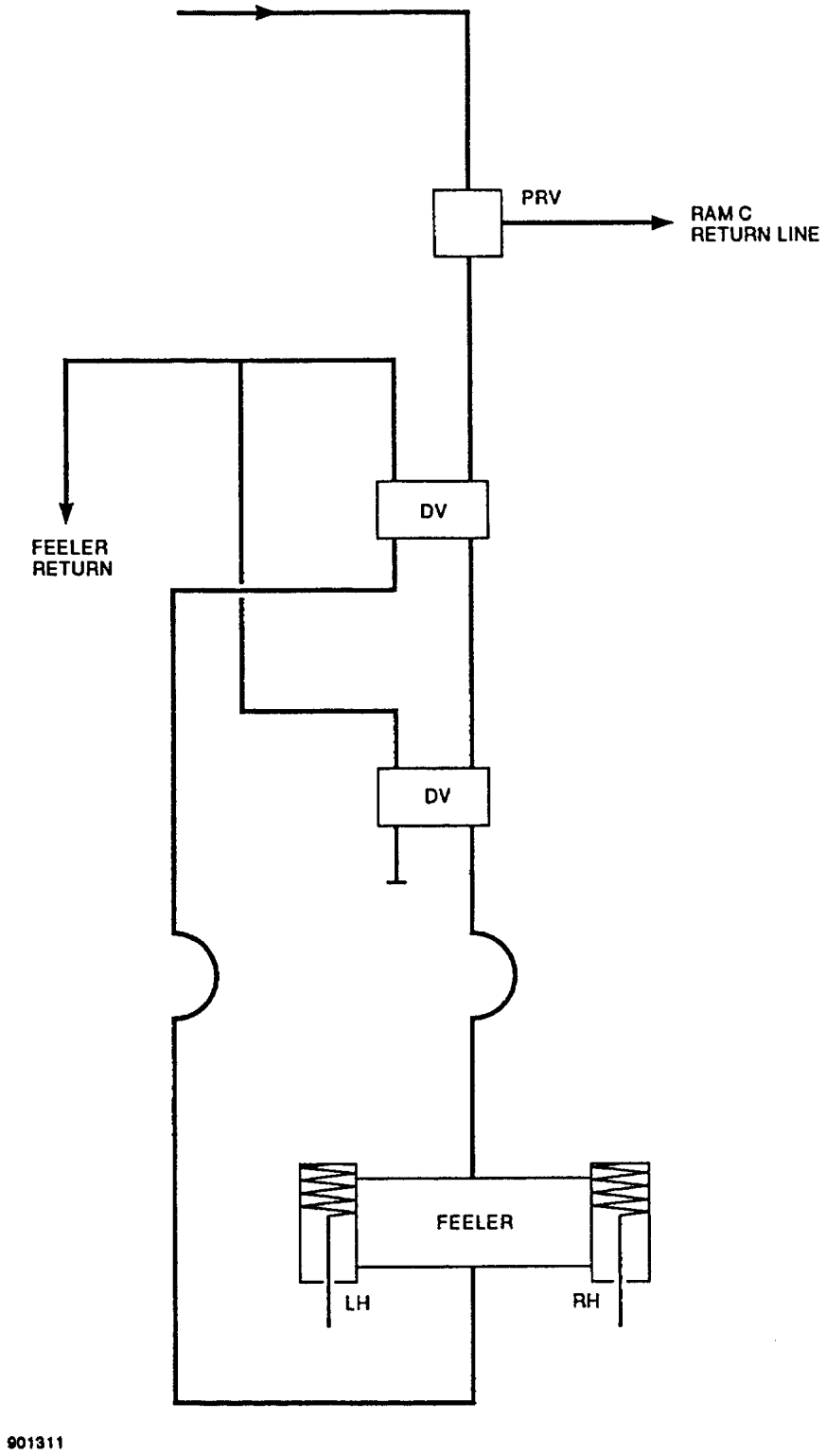

Figure A-54 Fueling Machine Separators Control Circuit

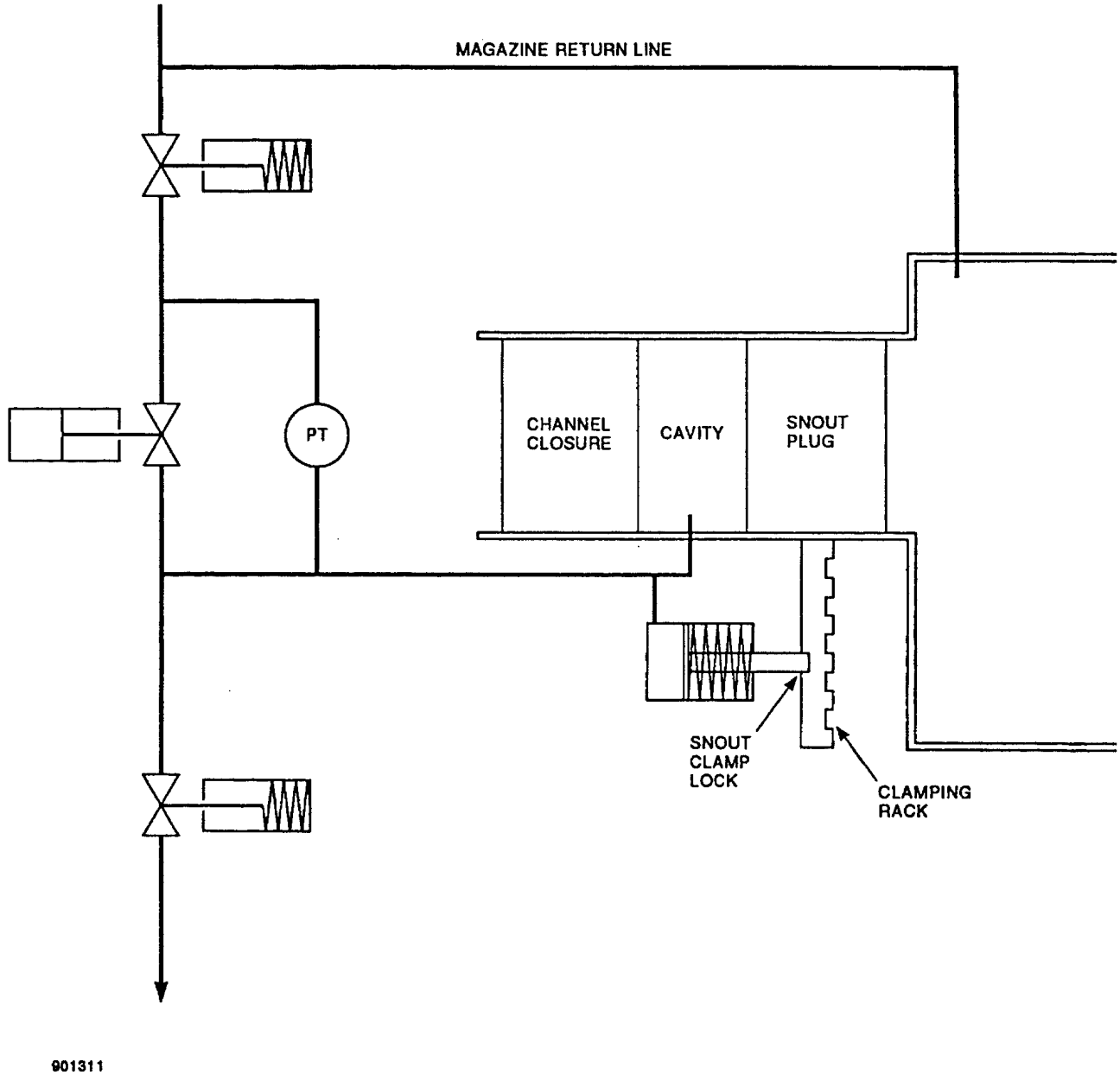

Figure A-55 Fueling Machine Snout Cavity Leak Detection Circuit

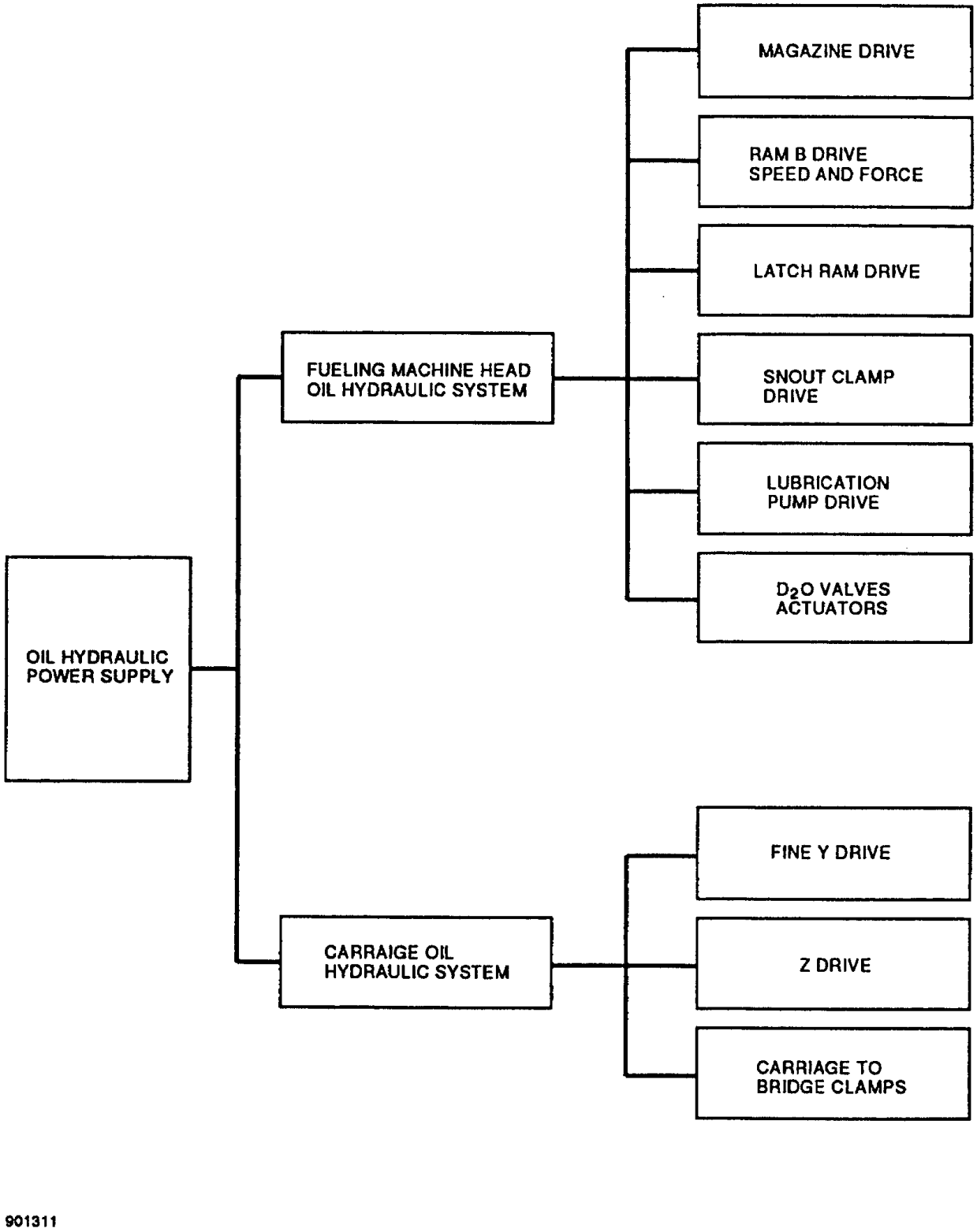

Figure A-56 Fueling Machine Oil Hydraulic System Block Diagram

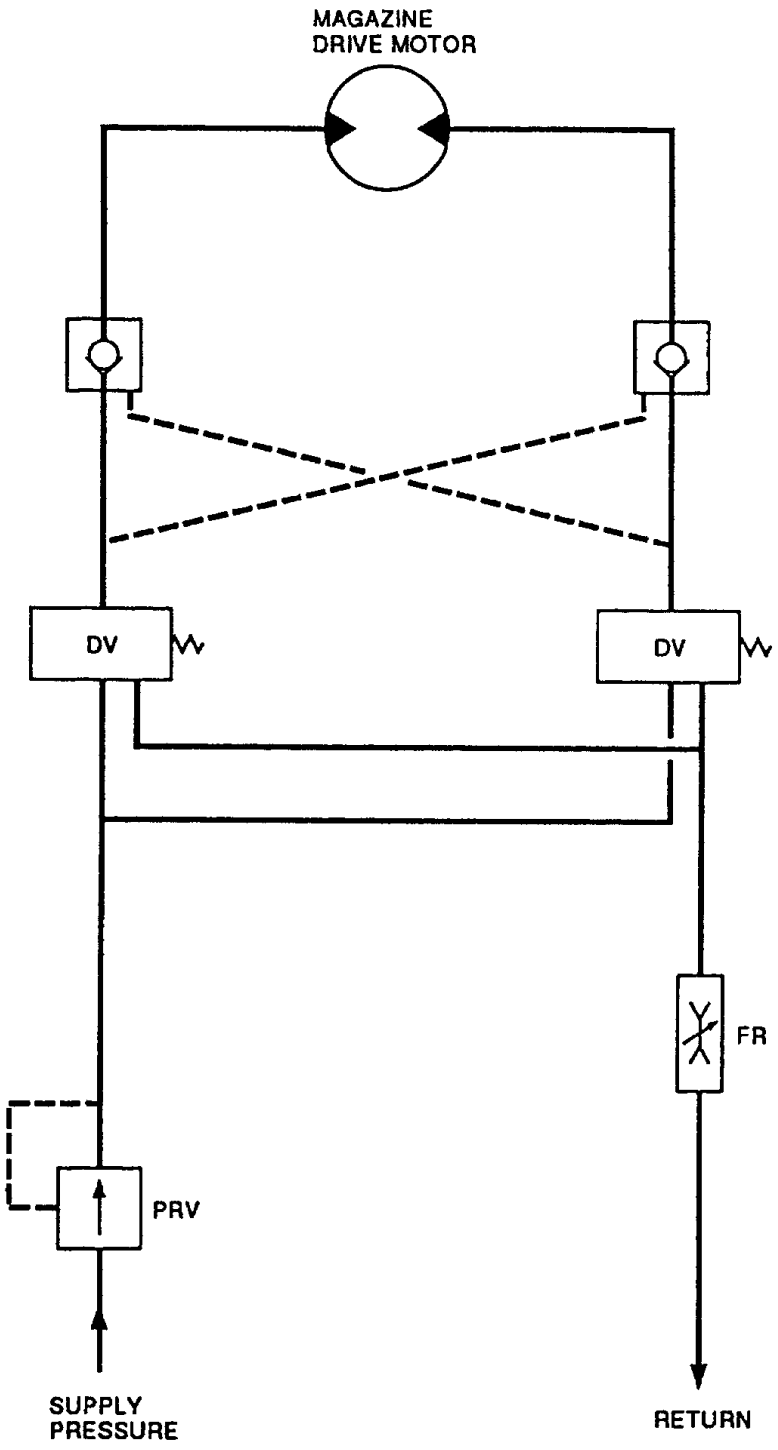

901311

Figure A-57 Fueling Machine Magazine Drive

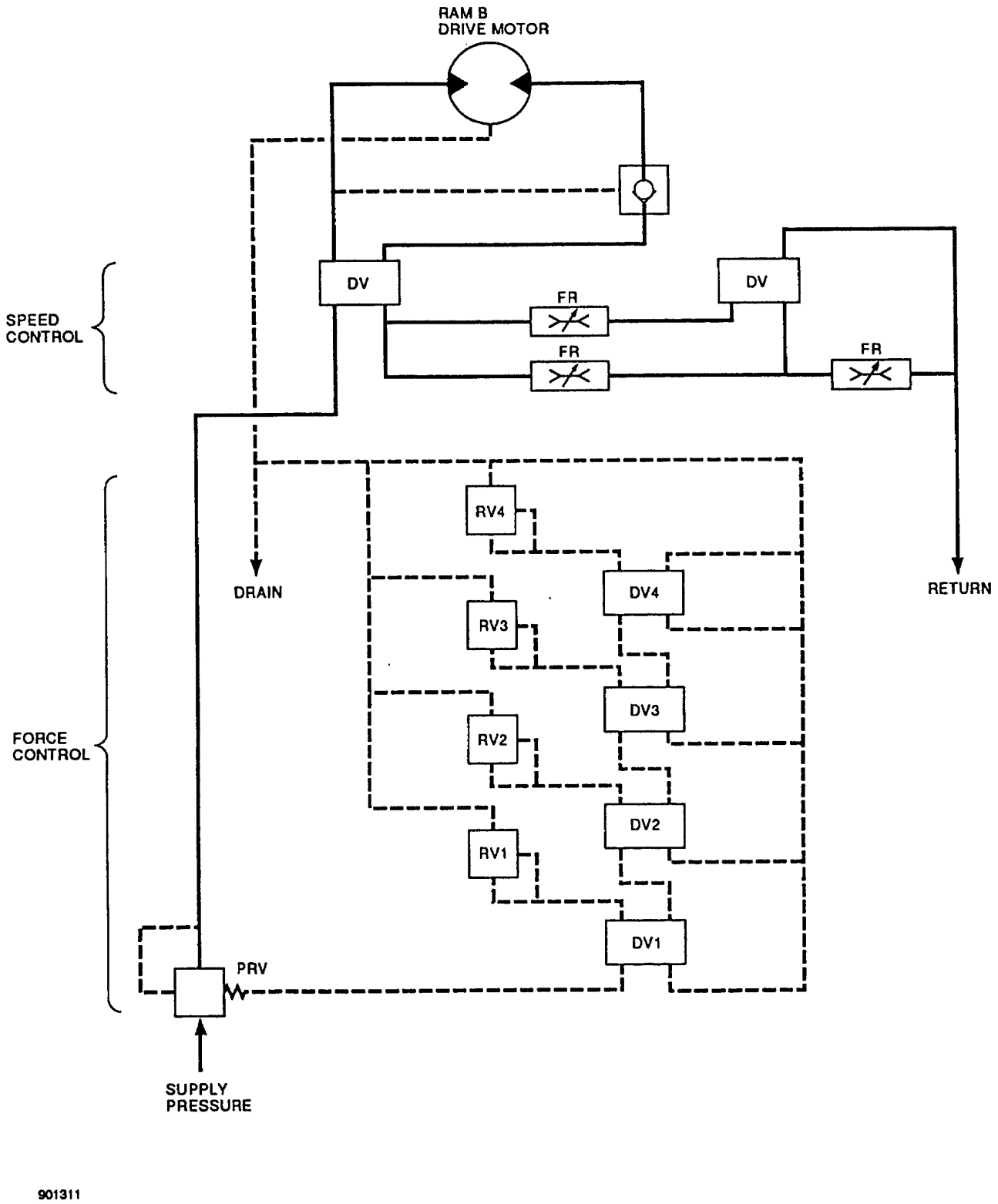

Figure A-58 Fueling Machine Ram B Drive Speed and Force Control

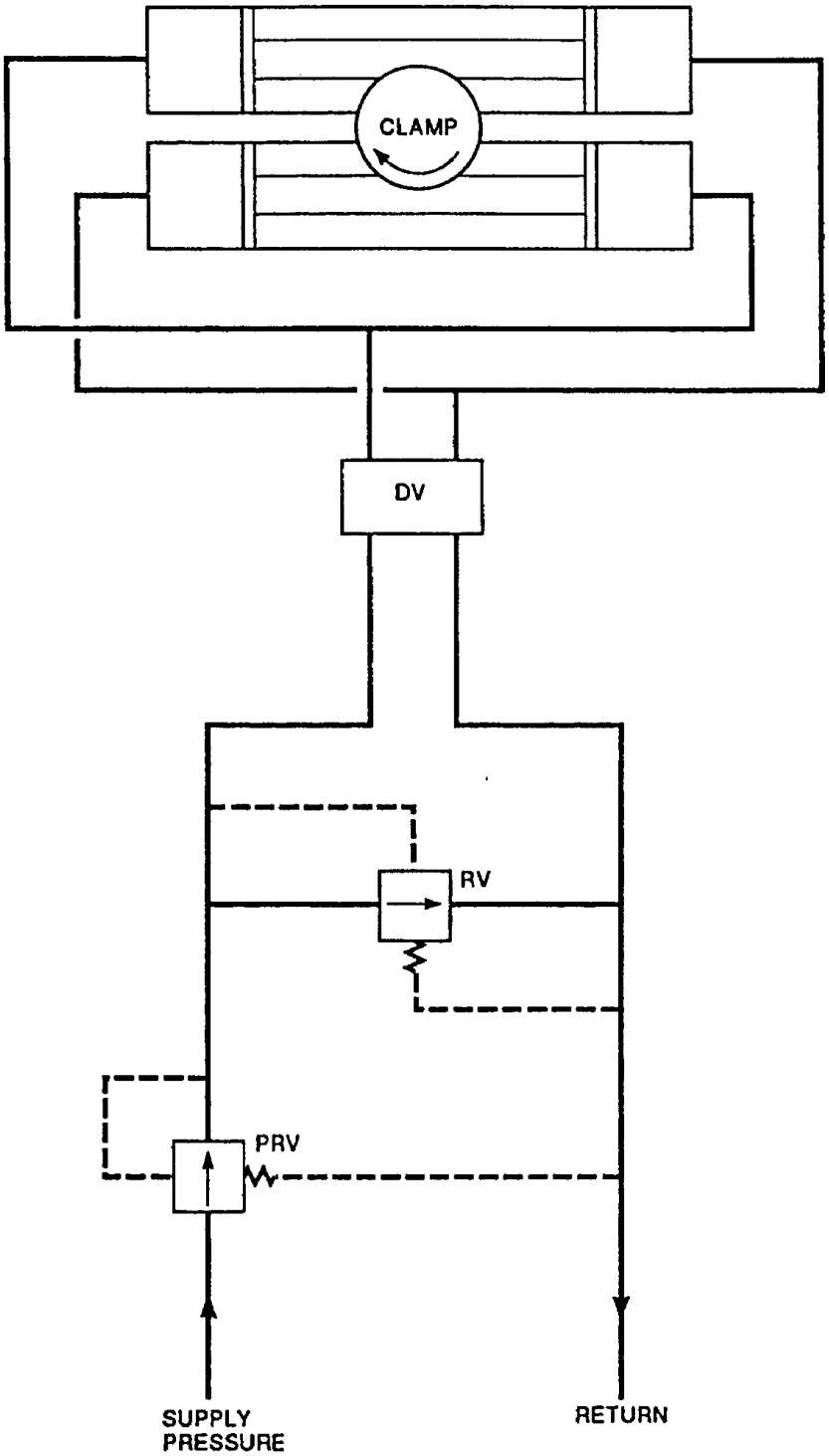

Figure A-59 Fueling Machine Snout Clamp

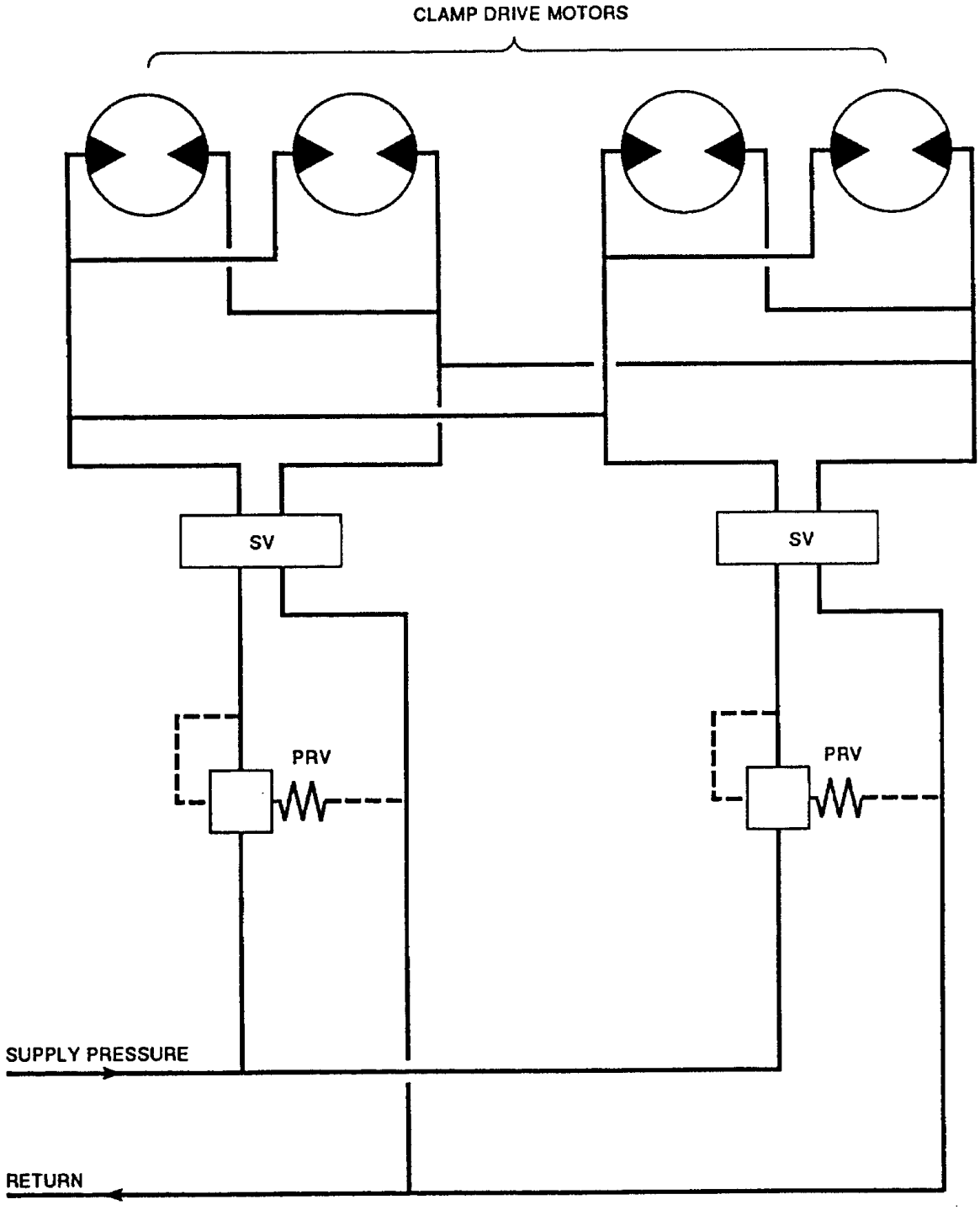

901311

Figure A-60 Fueling Machine Carriage-to-Bridge Clamps

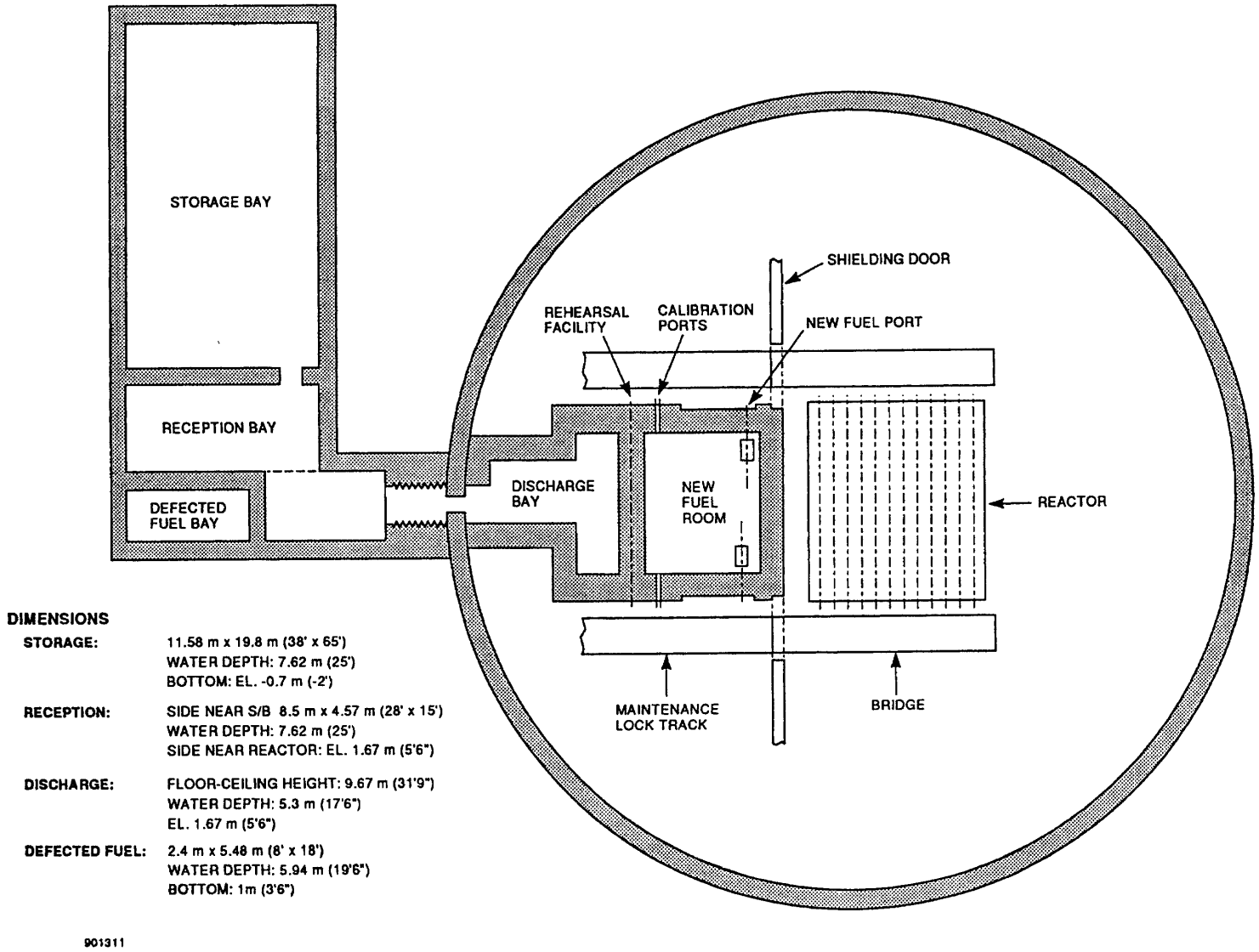

Figure A-61 Reactor and Irradiated Fuel Bays

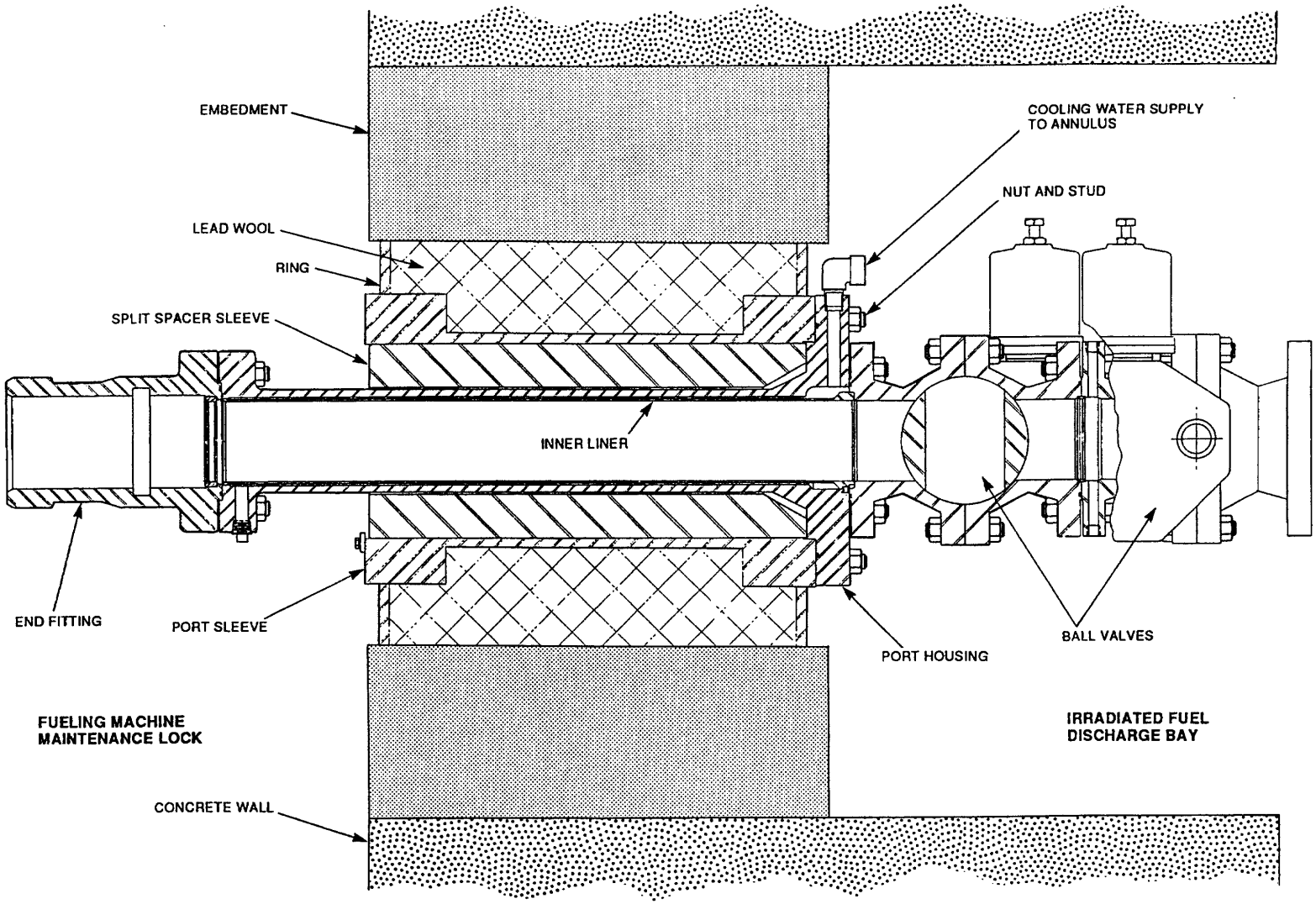

Figure A-62 Irradiated Fuel Port

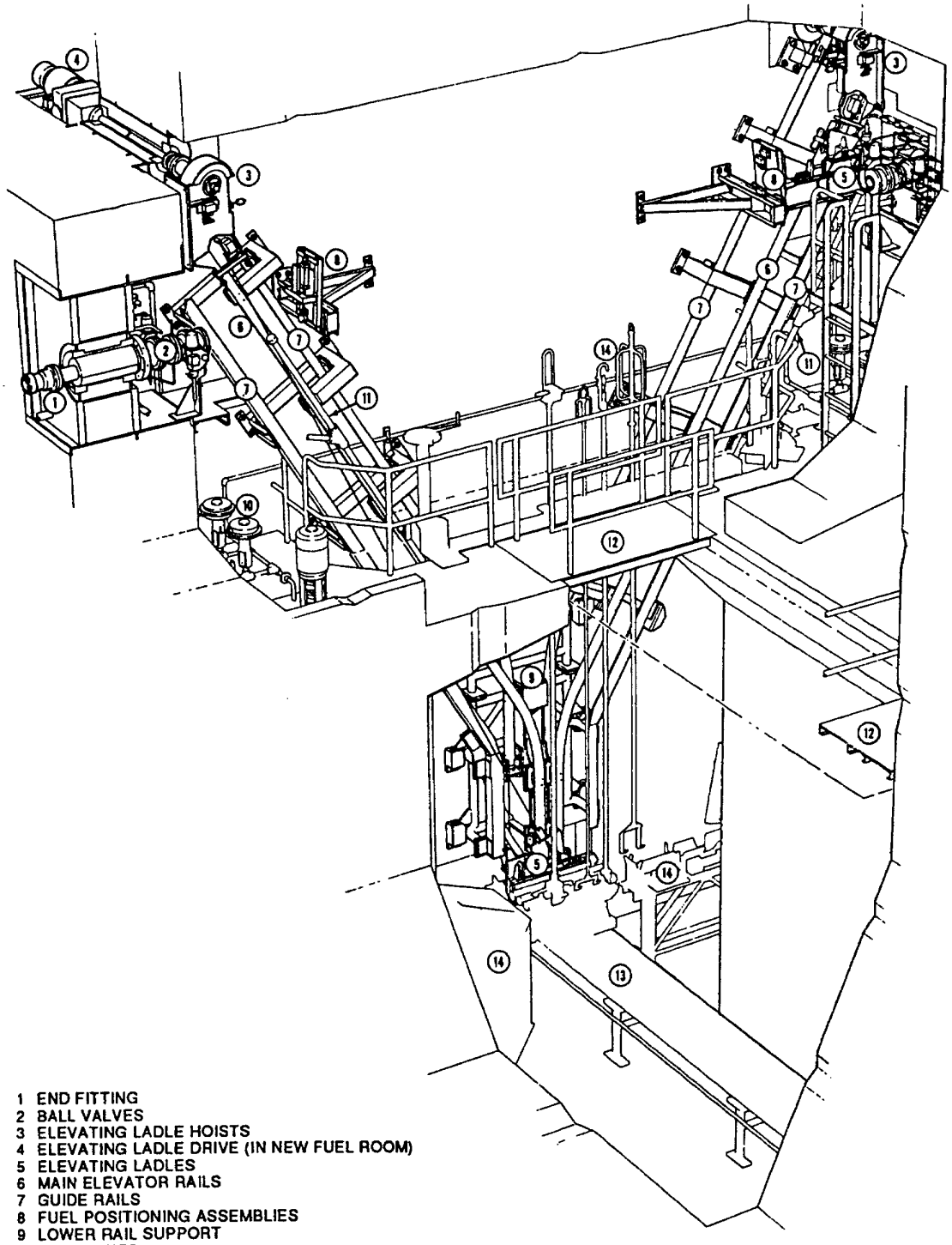

1 END FITTING
2 BALL VALVES
3 ELEVATING LADLE HOISTS
4 ELEVATING LADLE DRIVE (IN NEW FUEL ROOM)
5 ELEVATING LADLES
6 MAIN ELEVATOR RAILS
7 GUIDE RAILS
8 FUEL POSITIONING ASSEMBLIES
9 LOWER RAIL SUPPORT
10 AUXILIARIES
11 SPRAY HEADERS
12 REMOVABLE PLATFORMS
13 FUEL TRANSFER EQUIPMENT
14 DEFECTED FUEL CANNING EQUIPMENT

Figure A-63 Irradiated Fuel Discharge Equipment

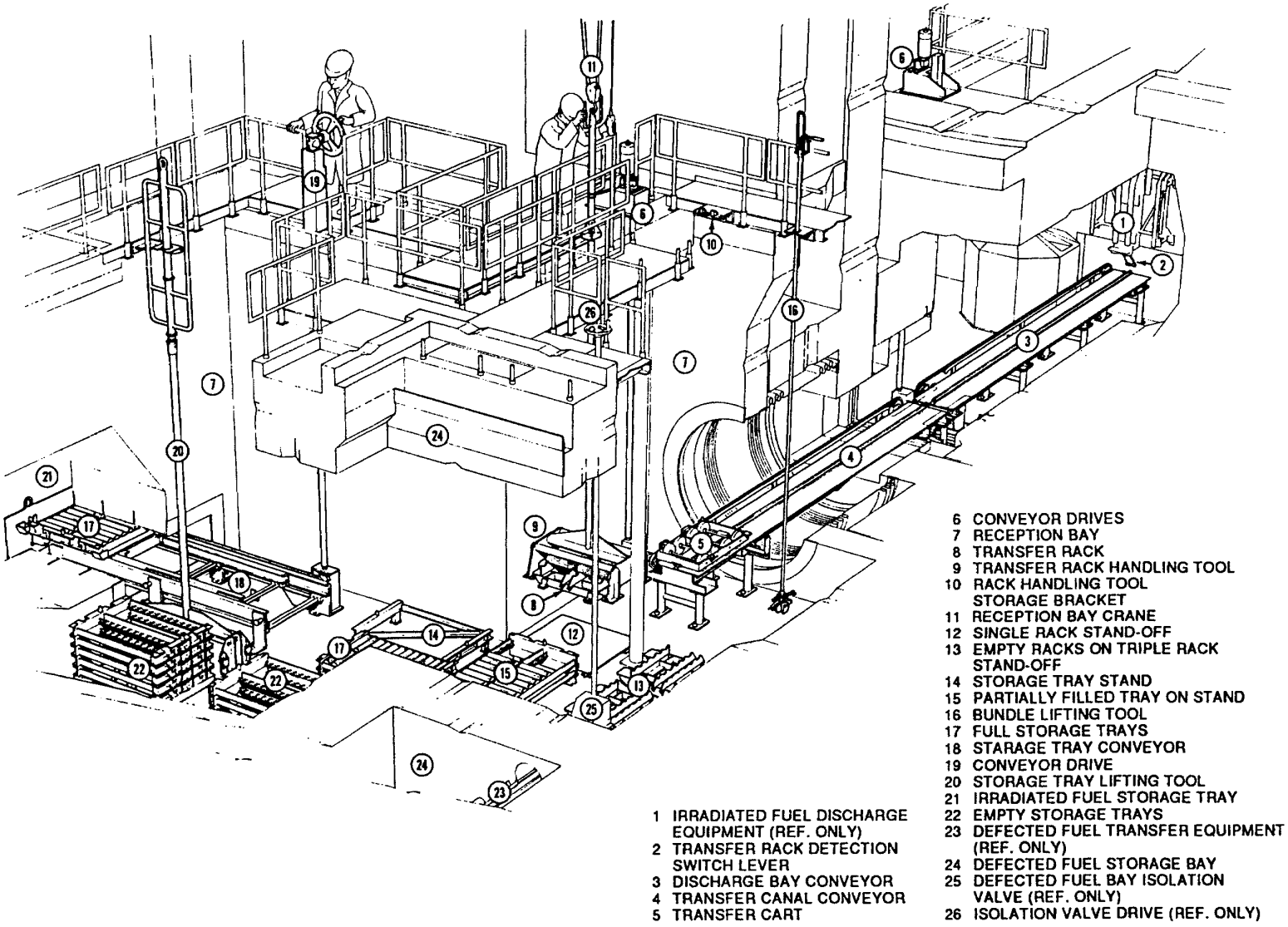

Figure A-64 Irradiated Fuel Transfer Equipment

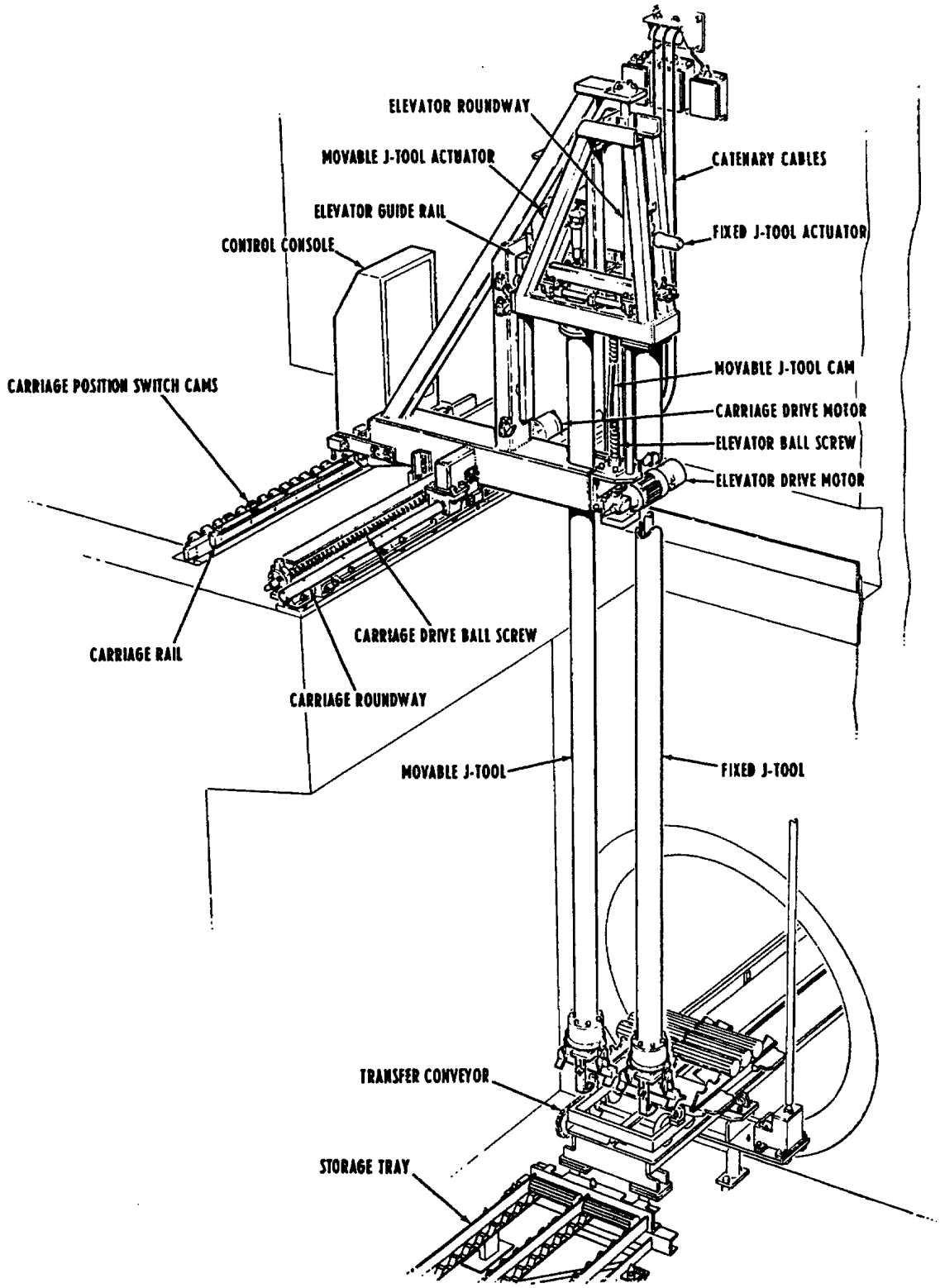

Figure A-65 Semi-Automated Fuel Handling System

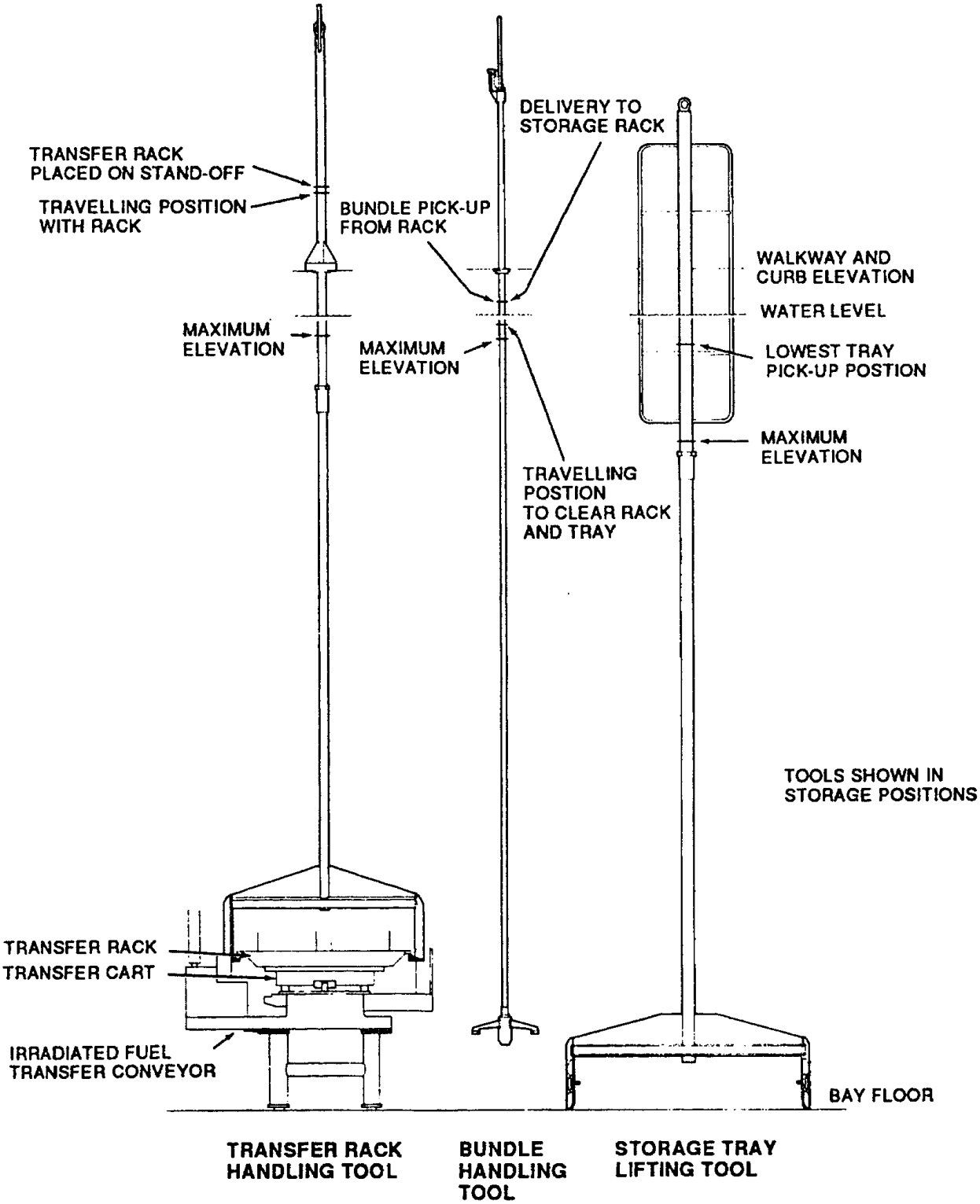

Figure A-66 Irradiated Fuel Handling Tools in Reception Bay

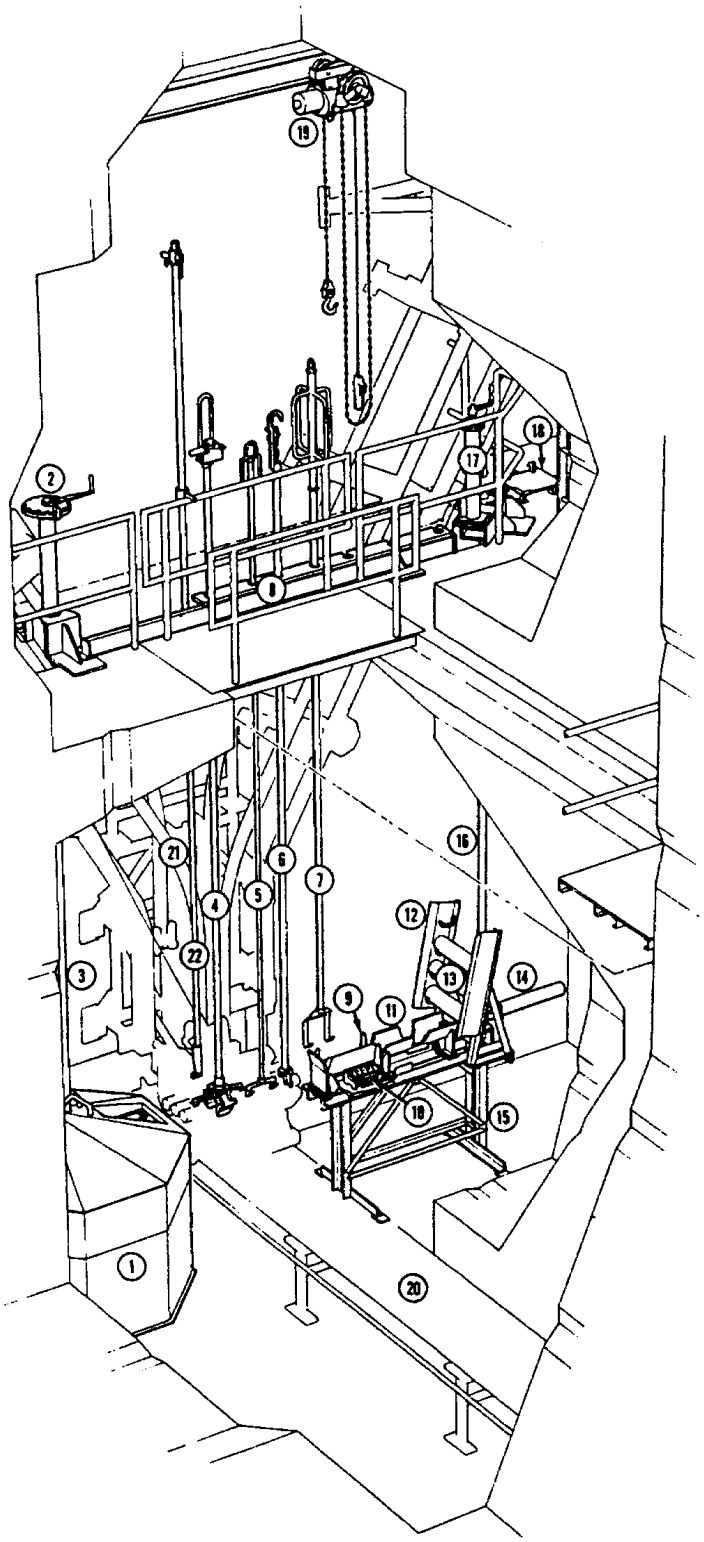

1 DEFECTED FUEL TEMPORARY STORAGE CAROUSEL
2 CAROUSEL INDEXING DRIVE
3 DRIVE SHAFT
4 FUEL HANDLING TOOL
5 LID STORAGE RACK HANDLING TOOL
6 LID HANDLING TOOL
7 CAN HANDLING TOOL
8 TOOL STORAGE RACK
9 CAN STAND
10 LID STORAGE RACK
11 FUEL TROUGH
12 CAN STORAGE RACK
13 STORAGE CANS
14 LOADING RAM
15 SUPPORT STRUCTURE
16 RAM DRIVE SHAFT
17 RAM DRIVE MECHANISM
18 LID STORAGE RACK ELEVATING TABLE
19 MONORAIL
20 FUEL TRANSFER EQUIPMENT
21 IRRADIATED FUEL DISCHARGE EQUIPMENT

Figure A-67 Defected Fuel Temporary Storage and Canning Equipment

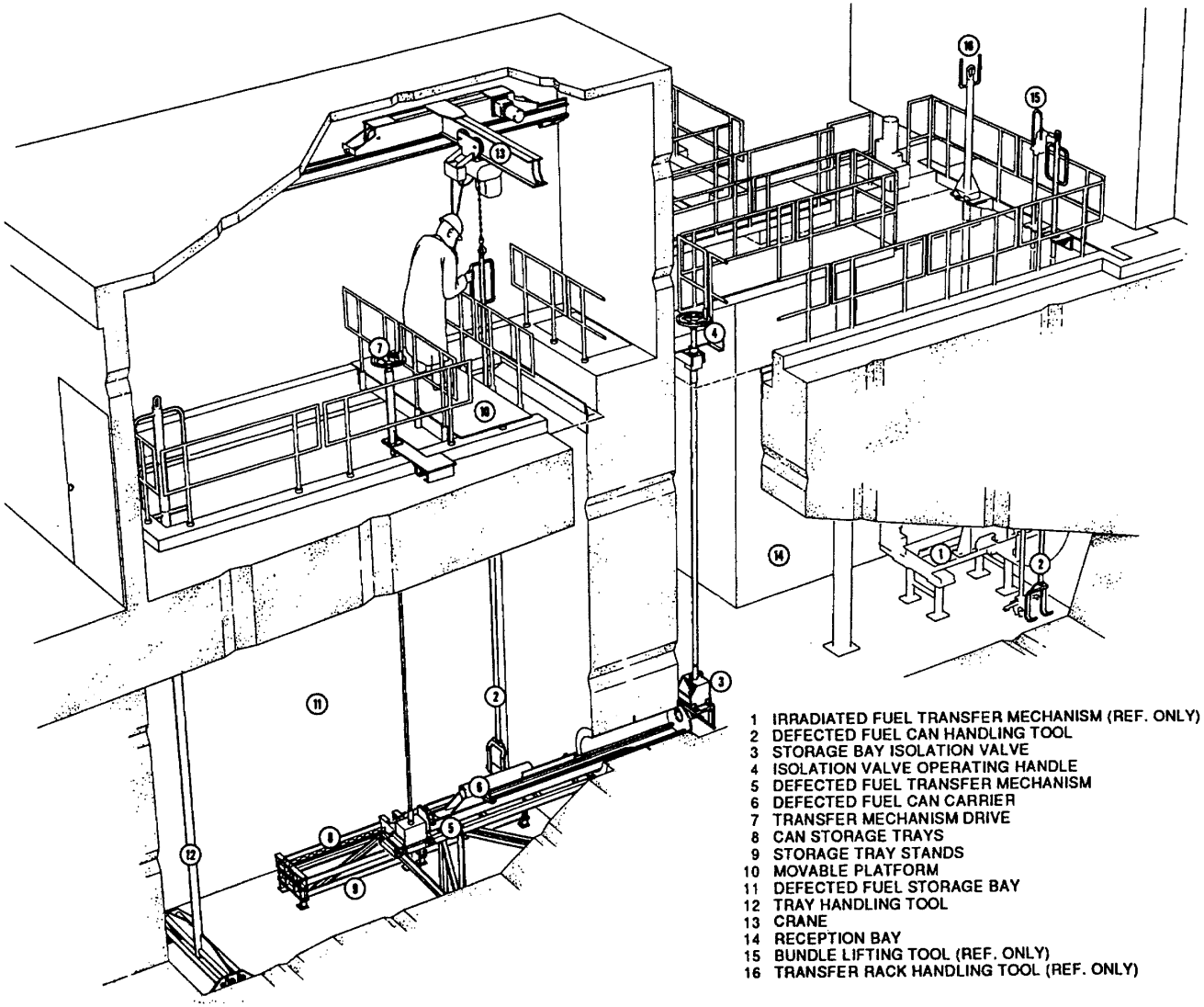

Figure A-68 Defected Fuel Handling Equipment

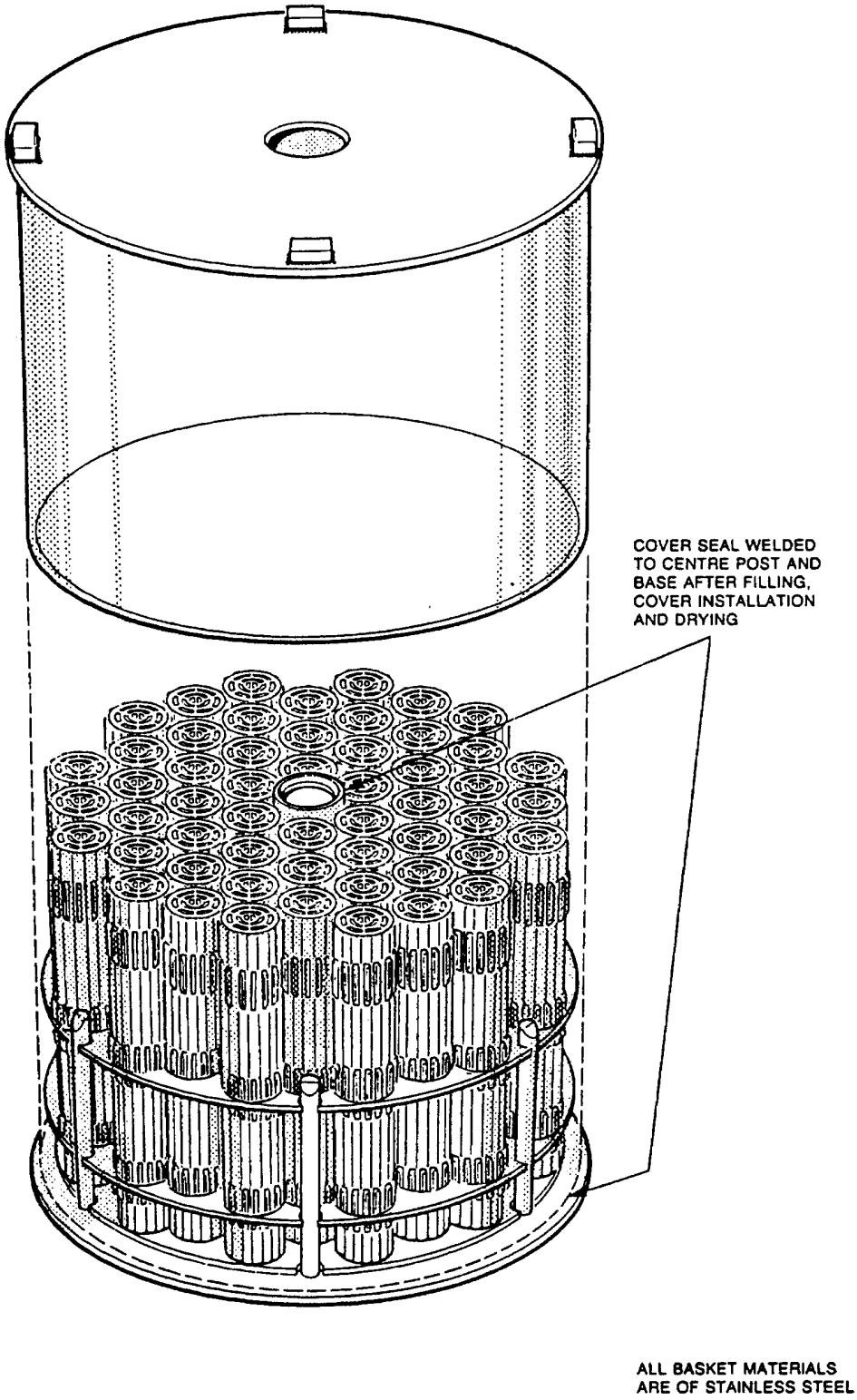

Figure A-69 Storage Basket

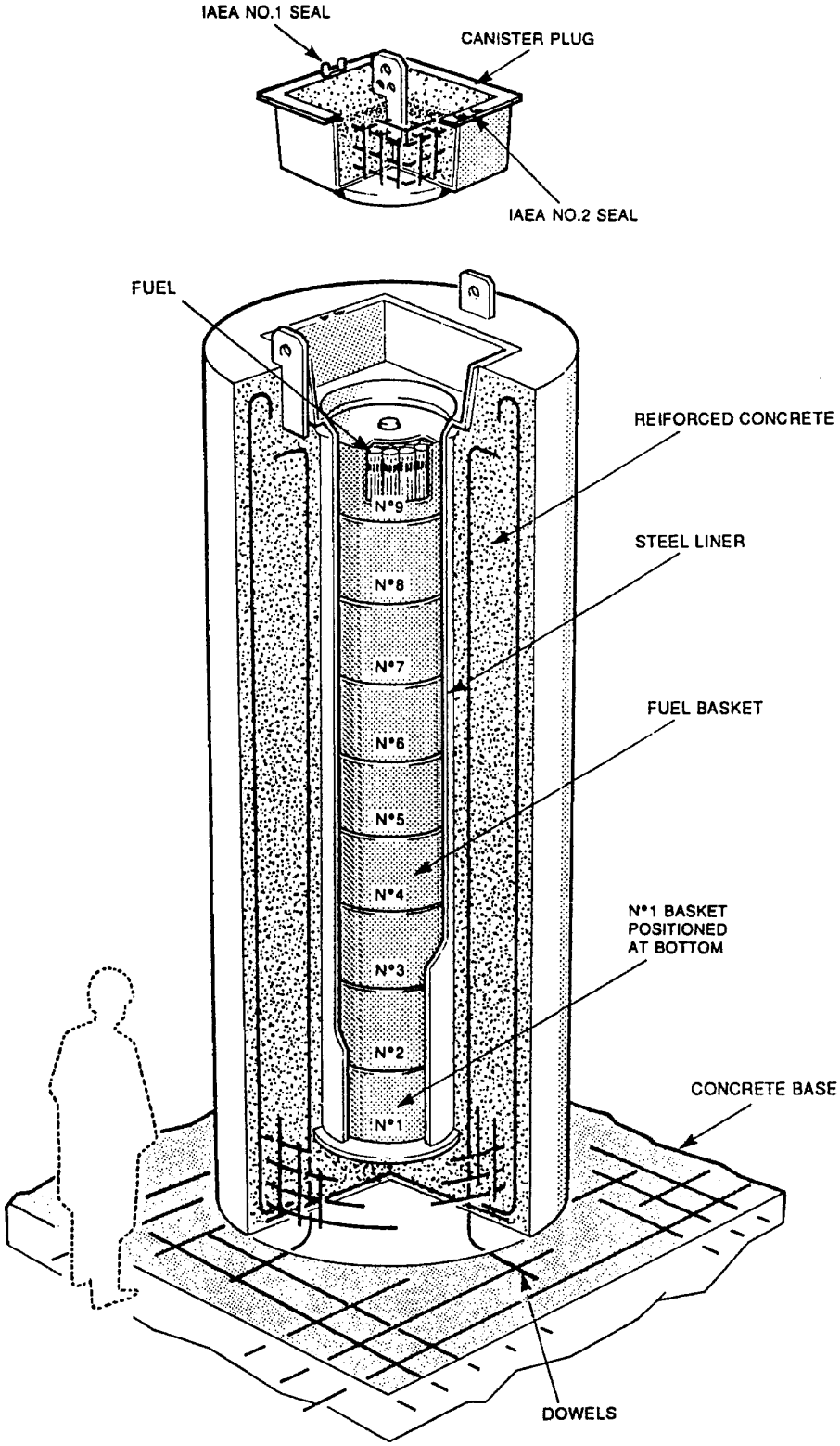

Figure A-70 Interim Dry Storage Concrete Canister

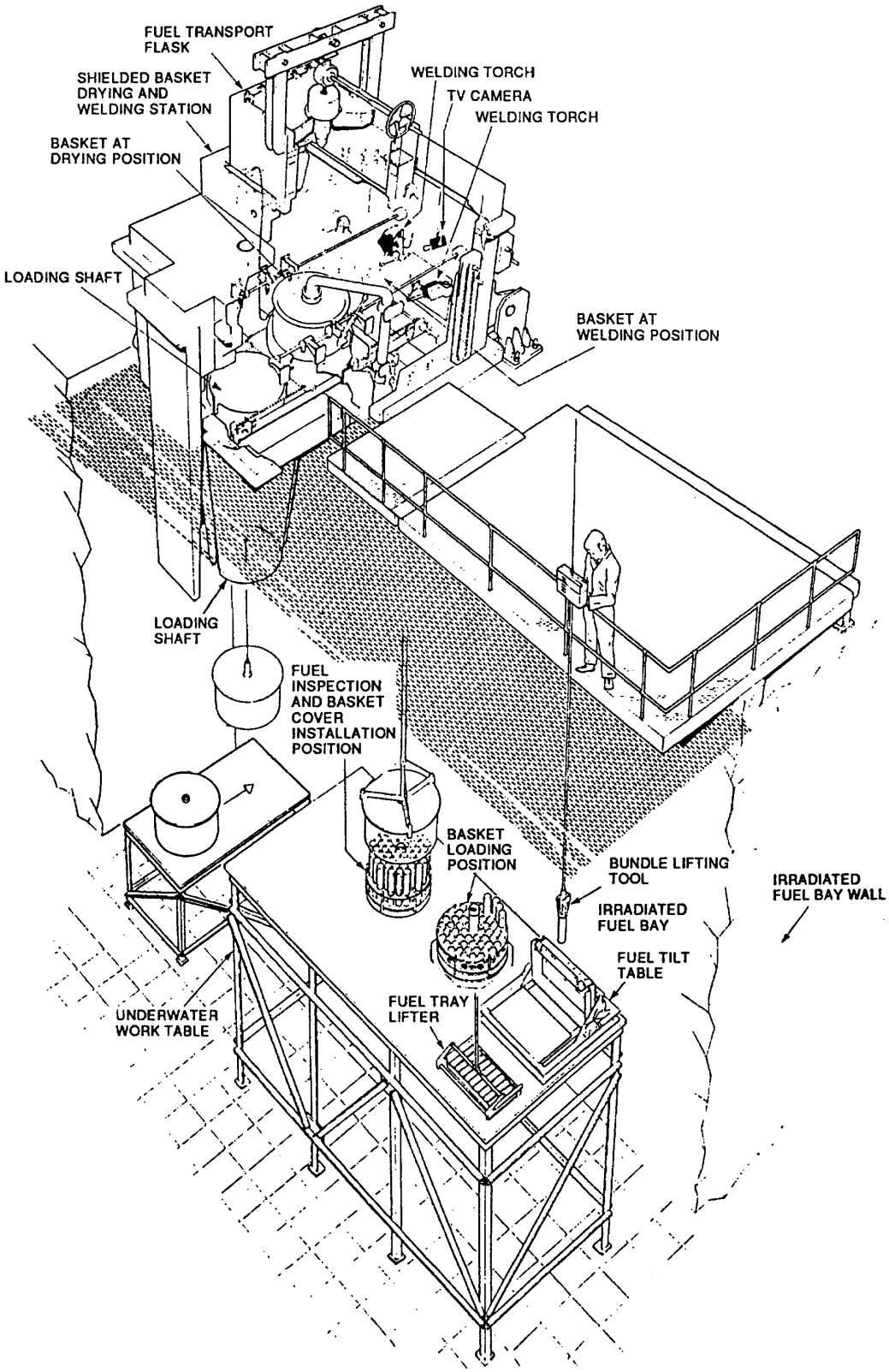

Figure A-71 Dry Storage Basket Loading Equipment

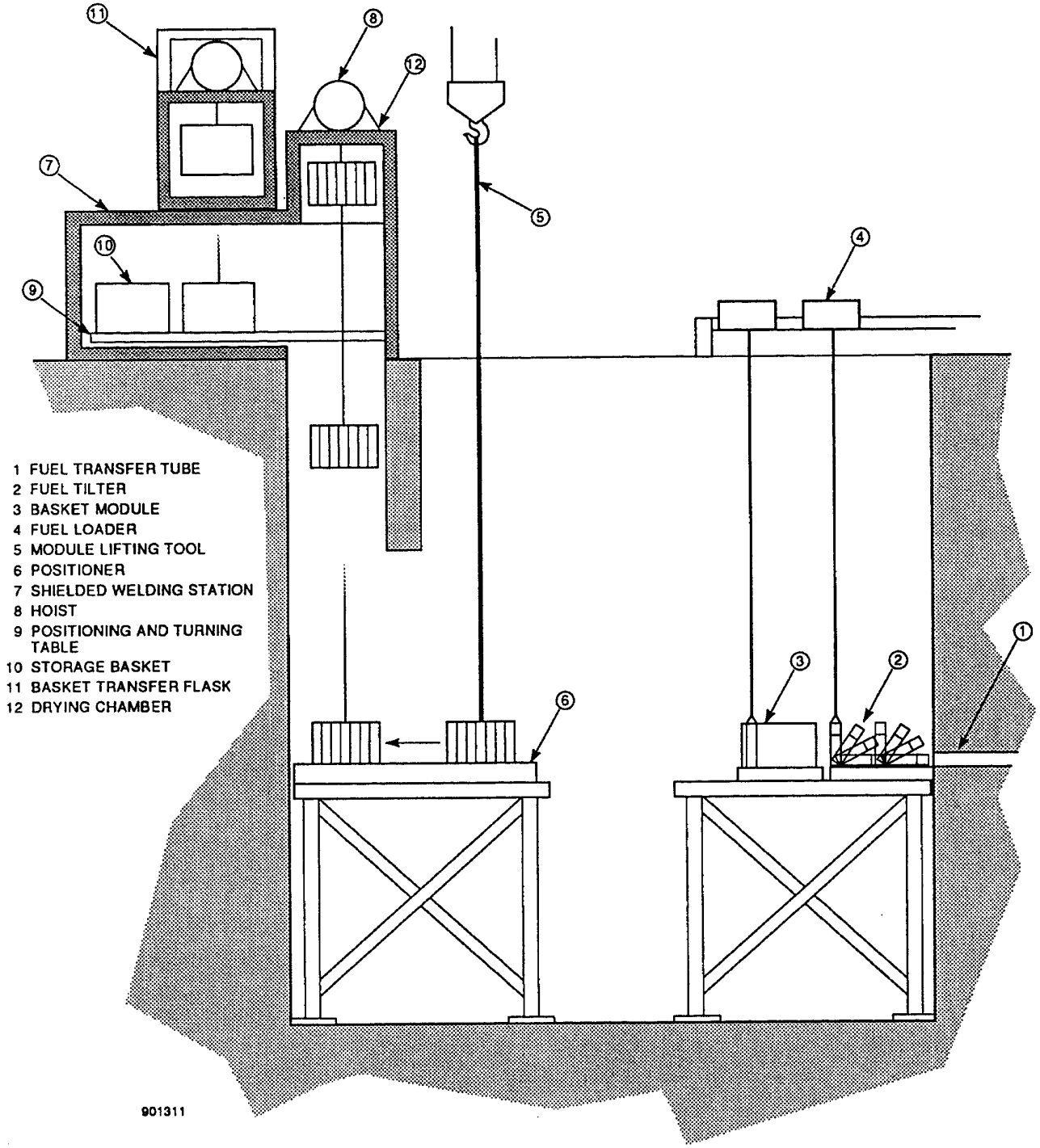

Figure A-72 Fuel Handling and Storage Operations

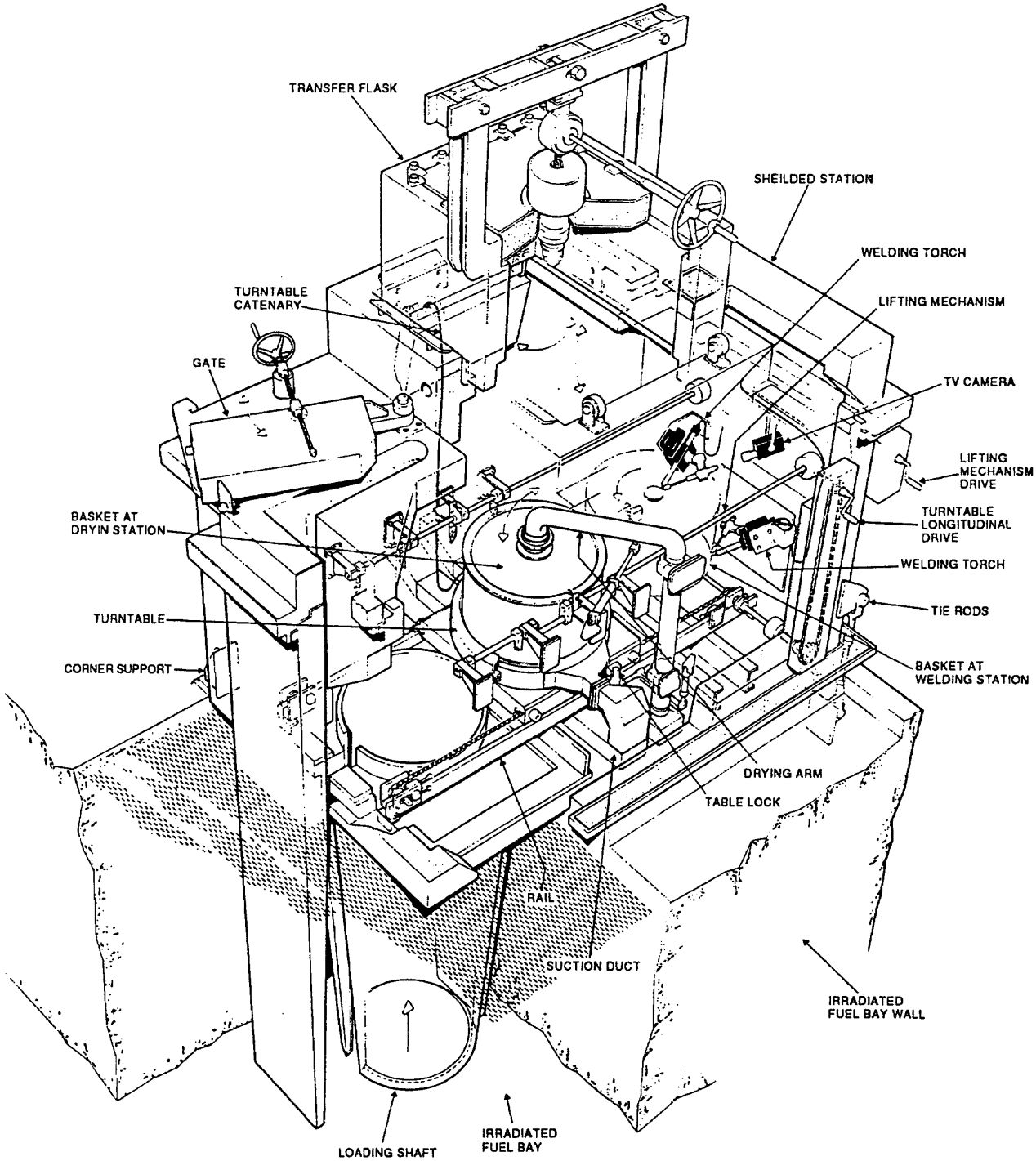

Figure A-73 Shielded Work Station Installation

Appendix B

Fueling Machine Recovery

Note: This Appendix is a modified reproduction of Chapter 5 of document TTR-305: "The Technology of CANDU On-Power Fueling", with information related to CANDU 3 deleted from Sections B.5 and B.8 as it is no longer applicable, and minor editorial changes incorporated. TTR-305 was submitted to the NRC in 1991. Some of the ACR specific features described in Section 6 eliminate some of the scenarios listed in this appendix. CANDU 6 reactors have operated for an accumulated service life of more than 60 reactor years. In the approximately 43500 fueling operations, no significant damage has been experienced by the CANDU 6 fuel bundles.

B.1 Introduction

In the event that a malfunctioning fueling machine (FM) is required to be recovered from the reactor end fitting, provision is made by built-in redundancy and manual drives that can be driven with hand tools through penetrations into the reactor vault.

In abnormal cases, experience has shown that tooling can be built as required at the time, rather than to have a number of tools on hand to meet postulated events. One exception, however, is the grapples which permit use of a functioning FM to defuel a fuel channel with the reactor shutdown, working only from one end of the channel, including removal of fuel from a disabled FM at the far end of the channel.

This chapter describes the recovery aspects of the CANDU fuel handling system. Examples are given to show how significant malfunctions have been resolved in the past. Subsequent to these occurrences, modifications have been incorporated into the FM to preclude recurrence.

This chapter will cover most major incidents that have generic implications; therefore, the information will not be confined to CANDU 6 experience.

B.2 Snout Lock-Up

The snout mechanism temperature increases when clamped to the high temperature reactor fuel channel end fitting. Difficulty with hydraulic lock-up occurred when the temperature of the oil in the actuating hydraulic system increased with a corresponding rise in the entrapped actuating pressure. This temporarily prevented unclamping of the mechanism. The oil hydraulic system has since been redesigned to preclude a similar incident.

In many of the CANDU FM snout designs, the anti-friction bearings which support the actuating screw are provided with Belleville washers to allow for any differential thermal expansion in the unclamping mechanism. The bearing races are tempered at a relatively low temperature; hence brinnelling of the bearing races was experienced at one time due to over-tempering of the races from the heat conducted from the reactor end fittings. This created difficulty in unclamping the snout. As an emergency measure, it was necessary to cut the return line on the hydraulic circuit to reduce the back pressure, hence increasing the differential hydraulic pressure in the mechanism to achieve a higher actuating force.

The snout is designed to maintain sufficient clamping force to maintain a leak-tight joint with the reactor end fitting. There was an incident where the mechanism was found to backwind and have a tendency for the snout to unclamp. This was overcome by specifying a more suitable lubricant in the Acme screw mechanism.

At Gentilly-2, the snout became stuck on the fuel channel end fitting, apparently due to lack of maintenance, resulting in deterioration of the lubricant in the snout mechanism. Reducing the back pressure in the oil hydraulic actuating system to increase the unclamping force was ineffective. Finally, the 'B' ram was used to relieve some pressure on the snout mechanism Belleville washers located adjacent to the anti-friction thrust bearings to enable the snout to unclamp.

B.3 Ram Assembly

The ram assembly in the Pickering and CANDU 6 FM is designed so that it can be readily replaced without having to remove the FM from the carriage. Before any serious problem is encountered with the mechanical ram, warning of any impending malfunction is generally forecast by evidence such as increased operating torque or seal leakage. Ball screw problems usually occur due to broken or worn balls. It is important that all load balls are of equal size and that they be kept in matched sets. Should there be any appreciable variation in the ball size, only the larger balls will carry the load, thus resulting in overloading and possible failure.

When the ball screw assembly reaches its extreme ends of travel, jamming of the nut could occur, the extent being dependent upon the lead angle of the thread. It was necessary to avoid this jamming action for proper operation of the ram. One method which has been used to avoid jamming is to provide dog stops on the ball nut and ball screw members so that at the extreme ends of travel, the dog stops terminate the relative rotary motion.

The rotating members of the mechanical ram drive are designed with low inertia to minimize any undesirable impact forces, particularly with respect to the fuel string.

In the event that the mechanical ram is coupled to the reactor fuel channel hardware, and the ram becomes inoperative, provision is made to ensure that differential thermal expansion will not result in high stresses in the mechanism. The ball screw lead is selected so that the unit has backwinding capability.

There have been instances when the ram head became jammed on the fuel channel hardware due to the 'C' ram preventing the latch ram to retract. 'C' ram balls on the ram head have now been preloaded with Belleville washers such that an increase in ram force will allow the 'C' ram balls to retract and release the latch ram. This has resulted in a significant improvement since a stuck ram head on a shield plug or channel closure in the fuel channel will otherwise prevent the normal closing of the fuel channel and subsequent operation of FM snout unclamping from the end fitting.

Mechanical shaft seal malfunction is usually evident from leakage or improper separating flow rates in the case of hydrostatic seals due to plugged jets. Mechanical ram force control is important and worn seal surfaces could result in increased input torque. The seal friction and other variable losses are designed to be a small percentage of the running torque, therefore, variation of the starting and running torque of the seal becomes less important. The manual

emergency drives that are provided on the mechanical ram are designed so that the input torque for manual intervention is possible with a manageable torque requirement.

An alternative position monitoring system such as a mechanical digital counter is used during manual intervention. It has been found that position monitoring read-out equipment with small shafts using couplings which rely on friction, tend to drift. Components are selected with adequate shaft sizes to allow the couplings to be positively fastened with locking pins.

On CANDU 6, stationary calibration ports are provided where they are readily accessible by the FM to set the ram forces. A commercial load cell is used to sense the ram forces. Since force calibration is carried out under pressure, pressure differential across the sensor rod which penetrates the pressure boundary must be compensated.

Calibration is required to provide the correct settings on the pressure control valves so that the oil hydraulic motors will provide the required ram forces.

On most CANDU FMs, precise force control is required during installation of the channel closure to provide the correct seal disc deflection, since a high installation force may result in difficulty during removal.

B.4 Mechanical Drives

On some of the FMs, a central gearbox is provided with multiple outputs to provide the different drives. It is equipped with two a.c. induction motors to provide redundancy. Speed control is achieved by variable frequency. Torque control is only moderate. The output drive shafts are equipped with clutches that are interconnected by a series of spur gears. Provision for manual emergency drive is provided on each output shaft on the shaft extension at the non-driving end.

Other CANDU FMs generally use oil hydraulic drives. Oil hydraulic motors provide excellent speed and torque control. However, maintenance of oil hydraulic systems often leads to some oil spillage. Frequently, problems have been encountered in trying to obtain spare oil hydraulic components several years after they were initially specified. In many cases, it was found that the manufacturer no longer makes the identical component, hence creating installation problems with substitute components, particularly when space is at a premium.

Several failures have occurred in mechanical drives when couplings on the shaft of the drive systems were lost due to the failure of a fastener (tab washers, locknut, key). Some of these incidents prevented reinstallation of the channel closure in the channel end fitting after fueling. Costly unit outages were required to recover the incapacitated FM. In some cases, the keyed coupling between the shaft and the gear were changed to a more reliable splined connection. In other cases, improvements were made to preclude recurrence. The capital cost of retrofitting splined shafts would be somewhat expensive. Problems arise in modification of existing commercial equipment such as gearboxes.

B.5 Emergency Drives

Over the years, manual emergency drive capability has been incorporated on the major drives of the CANDU FMs.

These drives generally feature a mechanism to disconnect the drive motor prior to manual drive input. This is particularly important with hydraulic motors to avoid torque resistance. For the

electrical system, it may be possible to specify an electric motor with double-ended shaft so that the emergency capability is available from the shaft extension.

On some CANDU applications, access to the FM in the reactor vault is available at the floor opening which is provided for the bridge. On other CANDU applications, openings with removable plugs are provided in the reactor vault floor at different locations to provide access for remote tooling.

The emergency drive shafts are generally pointed downwards and are equipped with cone-shaped funnels to provide guidance for the manual tools. An air motor attached to the end of extensions has been used to actuate emergency manual drives.

Manual emergency tools are not generally fabricated in advance. On occasion, when they have been required, tools have been designed and fabricated to meet the need.

When a FM with a disabled mechanical ram is clamped onto a fuel channel containing irradiated fuel, the second FM at the opposite end of the fuel channel has been used to remove the irradiated fuel using special grapple tools, thus allowing access to the disabled FM during reactor shutdown.

B.6 Guide Sleeve Station

The guide sleeve is installed in position, partially in the end fitting in the channel closure position and in the FM snout, to provide a constant bore passage for the fuel bundle to pass from the FM magazine station into the fuel channel. However, the guide sleeve station in the FM magazine is left with a bore larger than that of a fuel bundle outside diameter.

There was an incident at Pickering ‘A’ when a fuel bundle inadvertently entered the guide sleeve magazine station in the aforementioned condition. It was a very difficult task to remove a fuel bundle that had broken apart, from a large bore into a smaller bore. Special tools, including a scoop were designed to remove the damaged fuel bundle over the step in diameters.

Unfortunately, a portion of the fuel bundle pencil dropped into the bottom of the magazine housing. It was necessary to remove this FM from the carriage and place it in quarantine for several months in a specially designed water-filled tank. This FM was eventually disassembled in a new water filled pool that was constructed for Pickering ‘B’, as part of the FM maintenance facility.

The guide sleeve insertion tool was subsequently redesigned with an extension so that in the absence of the guide sleeve, it was not physically possible for a fuel bundle to enter the guide sleeve station in the magazine.

B.7 Separator

When the separator side stop is in the advanced position, it provides a mechanical restraint for the fuel string which is under the influence of the hydraulic drag force due to channel flow.

A mechanical safety lock is incorporated in the separator assembly to maintain the side stop in the advanced position which prevents accidental release of the side stop which could allow the fuel string to move into the FM, possibly with a high impact force.

The safety lock actuation is achieved by means of a canned solenoid, used on a large solenoid valve.

An incident occurred at Pickering 'A' when the solenoid failed and the separator side stop could not be retracted. In the resulting condition, it was not possible to move the fuel string which was partially located inside the FM snout.

A manual override assembly was incorporated in the separator assembly but access was very difficult. It was necessary to use the bridge as partial shielding to allow a manually operated tool with an extension to actuate the manual override lever.

Subsequently, the separator safety lock manual override lever has been equipped with a flexible cable extension shaft to improve access for emergency actuation.

B.8 Grapples

In the event of malfunction of a FM or during a shutdown, it may be necessary to remove fuel bundles from the fuel channel or from a disabled FM. Grapples may be utilized and defueling is possible using only one FM.

A grapple is a mechanical device that can be attached to the ram head on the ram assembly and manipulated in the same manner as in handling a channel closure or a shield plug. The grapple length is equivalent to one fuel bundle. It incorporates spring loaded fingers that can be used to latch onto the fuel bundle at the end plate.

Once the fuel bundle is attached to the grapple, the FM ram assembly can pull the grapple and the attached fuel bundle into the FM magazine station.

One or more ram extensions are used to allow the grapple to reach inside the fuel channel and as far as the disabled FM magazine at the far end to retrieve any stuck fuel bundle. These ram extensions are two bundle length, comprising cylindrical sections that can be attached and detached to one another as well as the grapple. They can be stored in the FM magazine stations in a similar manner to a pair of fuel bundles.

The ram extensions and grapples may become contaminated but they can be discharged from the FM during maintenance and servicing.

B.9 Fueling Machine Bridge Tilt

The vertical motion of the FM bridge is achieved by a pair of ball screws located in the support columns at each end.

Incidents have occurred that have resulted in tilting of the bridge to a small degree. In one instance a lock nut that fastened the thrust ball bearing at the top of one of the ball screws had detached from the threaded end. This was rectified by an improved tab washer on the locknut that secures the ball bearing. Also, a switch signal system was added to detect axial displacement of the ball screw (which is an abnormal state if the ball nut loosens).

Bridge tilt of a more significant amount occurred at Pickering 'A' in 1990 May during the current retubing program. The FM and its carriage assembly had been removed and replaced by a shielded work station that is used for the retubing work. The flexible coupling that is located

on the cross-shaft between the two column drives had failed due to loss of a key on the shaft in one half of the coupling.

An improved tab-lock key is now recommended as a more reliable arrangement. Splined connections between the shafts/couplings and gearboxes are also being implemented. Additional brakes are also implemented to ensure back-ups are provided for all modes of failure.

It is also necessary to ensure that a supplementary device such as a mechanical brake or hydraulic lock is also provided as a back-up.

In order to detect minor tilt conditions, instrumentation to detect tilt has been incorporated in some installations.

A bridge tilt estimated at 1.4 m (56 in) occurred at Bruce 'A' on 1980 October during vertical traverse. Bridge stop was initiated immediately after a bridge tilt alarm. With the aid of the periscope, the bridge tilt was corrected by manual intervention.

Apparently the cross-shaft coupling had failed due to cracking of the tapered bushing in one hub. It was postulated that the retaining set screws loosened and fell out due to vibration and/or improper initial installation.

There was no apparent visible damage to the bridge elevating mechanism and a new replacement coupling was installed on the cross-shaft.

However, nine months later during maintenance outage, it was discovered that mounting bolts on two of the roundway bearings that locate the bridge had failed. The failure might have occurred during the prior bridge tilt, or the bolts may have been overstressed and had failed later.

B.10 Fueling Machine Bridge Vertical Drift

An incident happened at the Bruce NGS in 1990 January in which the FM bridge drifted downwards with the FM clamped onto a reactor fuel channel end fitting. This resulted in tilt of the FM causing a breach in the leak tight joint between the FM snout and the reactor fuel channel end fitting. This had occurred as a result of software error in the fuel handling protective computers. A change had been made to the operating sequence at the site to eliminate the error but the revision had not been fed back to the design office where the source codes for the operating sequences are located.

In the event of abnormal fueling, operator intervention of FM control is intended. The incident occurred during such an operator intervention mode because the designer was not aware of the changes made to the computerized operating mode and had designed the operator intervention mode in accordance with the original design. This error, along with others, was detected during commissioning of the changes. However, it was the only error that was not corrected. Subsequent testing and software validation failed to reveal that the error was still present.

The bridge drive was not actuated but the brakes were released inadvertently and the bridge drifted downward. The end fitting that was attached to the FM deflected about 100 mm (4 in) and contacted the end fitting that was located just below it and deflected it by about 38 mm (1.5 in).

This incident resulted in leakage of 20,000 L (5300 U.S. gal.) of coolant of which 98.4% was recovered.

There was no apparent damage to the lower end fitting which sprung back to its original position within the permissible tolerance. The end fitting that was clamped to the FM was bent in two places; namely at the tube sheet and at the channel closure location. There was significant damage to the FM suspension and no damage to the FM itself was apparent.

Two design changes were made:

- The protective computer and control computer must be fully operational before bridge movement is permitted. When one of the computers is not available, no control power will be permitted to the bridge or carriage drives or to release the brakes.
- Hard-wired interlocks will inhibit bridge and carriage drives whenever the 'Z' drive is advanced.

As a result of this incident, fuel handling software configuration management system, particularly the software change procedure, is being thoroughly reviewed. All future fuel handling software changes will be subjected to a more rigorous change control procedure.

B.11 Carriage Drive

Some commercial gearboxes have been specified on the carriage and related drives. There have been instances when the drive was lost due to failures resulting from loss of a key at the shaft and coupling joint.

Especially in critical applications, precaution is taken to ensure that the specifications and quality of the commercial units meet minimum standards to specify fasteners equipped with a positive means of locking.

B.12 Hose Failure

Elastomeric and metal flexible hoses are used on the catenary system for the D_2O and oil hydraulic systems.

In the event of hose failure associated with safety systems, flow fuses or excess flow valves have been used as well as individual solenoid valves to stop the leakage of fluid. Redundancy is built into the systems so that a hose failure does not result in a significant consequence.

Hoses are only purchased from approved suppliers and development of more reliable hoses is carried out on an on-going basis.

Visual inspection of hoses and cables was found to be unreliable, leading to replacement at pre-determined intervals as part of a preventative maintenance program. Pressure testing and destructive tests are performed on in-service hoses and cables to provide data regarding service life.

If temperature permits the use of elastomeric hoses, they are preferred over metallic hoses due to lower pressure drop characteristics.

B.13 Conclusions

The fuel handling systems have been proven to be reliable and station incapability due to fuel handling is traditionally less than 1%.

Upgrading of the fuel handling system is carried out on an on-going basis to enhance capability, improve maintainability and reduce radiation exposure.

Research and development of generic nature for possible back-fits to existing operating equipment, as well as for future advanced systems is carried out separately under programs sponsored by the CANDU Owners Group (COG), over and above specific improvements pertaining to any plant design.

B.14 Bibliography

1. S. Jayabarathan, "Ten Year Performance of Bruce Nuclear Generating Station 'A' On-Power Fueling System", CNA 10th Annual Conference, Ottawa, 1989 June.