CorSTAR

A TEKNEKRON INDUSTRIES AFFILIATE

July 10, 1985

NRC FIN B6985

WM-RES
WM Record File
B6985
CorStar

WM Project 10, 11, 16
Docket No.
PDR ✓
LPDR ✓ (B, N, S)

Distribution:
x P. Brooks x Joan Ticket
x Still
(Return to WM, 623-SS)

Pauline Brooks, Project Officer
Division of Waste Management
MS 623 SS
U.S. Nuclear Regulatory Commission
Washington, D.C. 20555

Subject: Contract No. NRC-02-81-026
Benchmarking of Computer Codes and Licensing Assistance
Monthly Letter Progress Report for May 1985

Dear Pauline:

This letter contains a management level summary of progress during the month of May. Attached to the report is a copy of the technical status summary and further discussion of work performed during this period. We are submitting a cost summary under separate cover.

Task 3 - Benchmark Problem Report - Waste Package Codes

We are awaiting the receipt of the NRC's comments on this report.

Tasks 4 & 5 - Siting Codes

There was no significant activity on this code area during the month.

Tasks 4 & 5 - Radiological Assessment Codes

During May the internal draft benchmark problem results report was reviewed by CorSTAR personnel.

Tasks 4 & 5 - Repository Design Codes

During May, the results of Problem 6.1 (Project Salt Vault) were reduced. These more detailed results are presented in the Technical Status Summary and supersede those presented in the October 1984 progress report.

The results from VISCOT Problem 5.2 - Basalt have been summarized and plots of the horizontal and vertical displacements and major and main principal stress contour for time of 10, 30, and 100 years are included at the end of the report.

WM DOCKET CONTROL CENTER
'85 JUL 17 P3:06

8508010680 850710
PDR WMRES EECCORS
B-6985 PDR

CORPORATE SYSTEMS, TECHNOLOGIES, AND RESOURCES
2121 ALLSTON WAY • BERKELEY, CALIFORNIA 94704 • (415) 548-4100

BERKELEY WASHINGTON, D.C. INCLINE VILLAGE

2221

During May, CorSTAR started to prepare input for the STEALTH benchmark problems. Several of the benchmark problems will require the development of subroutines to simulate material properties and boundary conditions.

General

As we have discussed, the lengthly delay caused by the unavailability of the ADINA, ADINAT, and STEALTH codes has caused us to fall behind schedule for submitting the benchmark problem results report. Since we do not know when the codes will be available, we are unable to provide you with a revised schedule at this time. Further delays are likely to have cost and well as schedule impacts.

We are changing accounting computer systems. Cost information for this month will be provided when the new accounting computer system is operational.

Sincerely,

Douglas K. Vogt

Douglas K. Vogt
Project Manager

TECHNICAL STATUS SUMMARY

TABLE 3

MATRIX OF CODE/PROBLEM COMBINATIONS*
(Revised 2/21/85)

Legend:

x Benchmark Problems by Acres.
0 Benchmark Problems by Teknekron.
(1) Requires 2 runs, one for MATLOC and one for VISCOT.
(2) Two-Dimensional Analysis.
(3) Requires 3 runs, one for MATLOC and two for VISCOT.
(4) Requires 2 runs, one for Salt and one for Basalt.
S - Problems run for Salt.
B - Problems run for Basalt.

	ADINA - 3D	ADINAT - 3D	DOT	HEATING	MATLOC	SPECTROM 11	SPECTROM 41	VISCOT	COYOTE	SALT 4	STEALTH
2.0 THERMAL ANALYSIS CASE PROBLEMS											
2.6 Transient Temperature Analysis of an Infinite Rectangular Bar With Anisotropic Conductivity (Schneider, 1955, pp. 261)		(2)	x	0					x		0
2.8 Transient Temperature Response to the Quench of an Infinite Slab With a Temperature-Dependent Convection Coefficient (Kreith, 1958, pp. 161)		(2)		0					x		0
2.10 Steady Radiation Analysis of a Infinite Rectangular Opening (Rohsenow and Hartnett, 1973, pp. 15-32)		x		0					x		0
3.0 GEOMECHANICAL ANALYTICAL PROBLEMS											
3.2 Circular Tunnel (Long Cylindrical Hole in An Infinite Medium)											
a) Unlined in elastic medium - biaxial stress field					x						
b) Unlined in plastic medium (Tresca) von Mises	(2)							x			0
3.3 Thick-Walled Cylinder Subjected to Internal and/or External Pressure											
c) Plane strain - creep	(2)							x			
3.5 Plane Strain Compression of an Elastic-Plastic Material von Mises; Drucker, Prager	(2)							x			0
5.0 HYPOTHETICAL REPOSITORY DESIGN PROBLEMS											
5.1 Hypothetical Very Near Field Problem	x	x		0							
5.2 Hypothetical Near Field Problem			S,B x(3)		B x			S,B (4)	S x	S x	0
5.3 Hypothetical Far Field Problem	(2)	(2)								x	0
6.0 FIELD VALIDATION PROBLEMS											
6.1 Project Salt Vault-Thermomechanical Response Simulation Problem	(2)	(2)	x					x		x	0
6.3 In Situ Heater Test-Basalt Waste Isolation Project	(2)	(2)	(1)		x			x	x		0

* From NUREG/CR-3636, Benchmark Problems for Repository Design Models, February 1984.

Problems completed

Problems attempted, results not analyzed

DOT PROBLEM 6.1P — ROOM 3

TEMPERATURE HISTORY @ MID–HEATER LEVEL

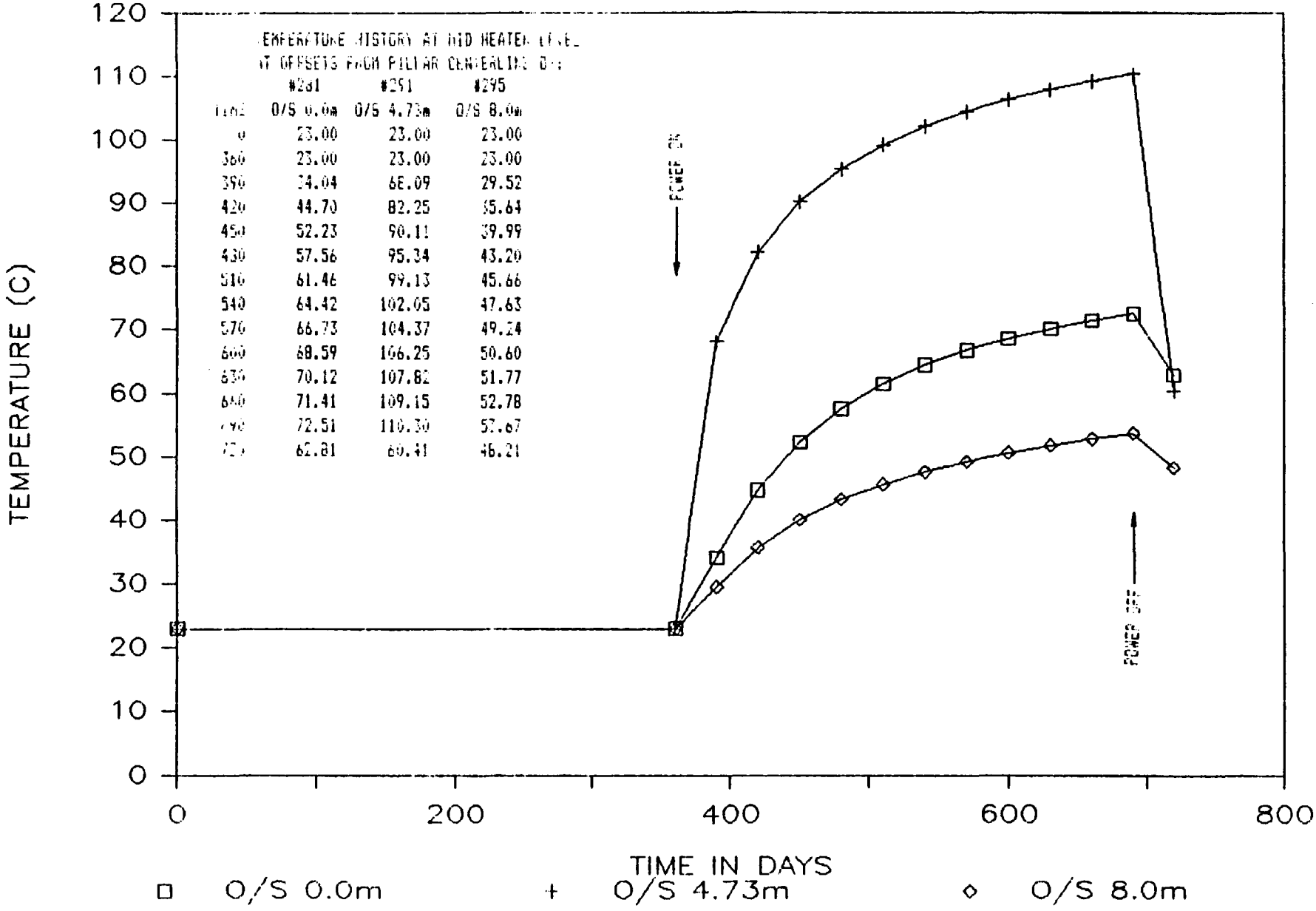

TEMPERATURE HISTORY AT MID HEATER LEVEL
AT OFFSETS FROM PILLAR CENTERLINE OF:

TIME	#281 O/S 0.0m	#291 O/S 4.73m	#295 O/S 8.0m
0	23.00	23.00	23.00
360	23.00	23.00	23.00
390	34.04	68.09	29.52
420	44.70	82.25	35.64
450	52.23	90.11	39.99
480	57.56	95.34	43.20
510	61.46	99.13	45.66
540	64.42	102.05	47.63
570	66.73	104.37	49.24
600	68.59	106.25	50.60
630	70.12	107.82	51.77
660	71.41	109.15	52.78
690	72.51	110.30	53.67
720	62.81	60.41	46.21

Figure 6.5-3 DOT Problem 6.1P - Room 3
Horizontal Temperature Profile
on Day 690

DOT PROBLEM 6.1P — ROOM 3

HORIZONTAL TEMPERATURE PROFILE @DAY 690

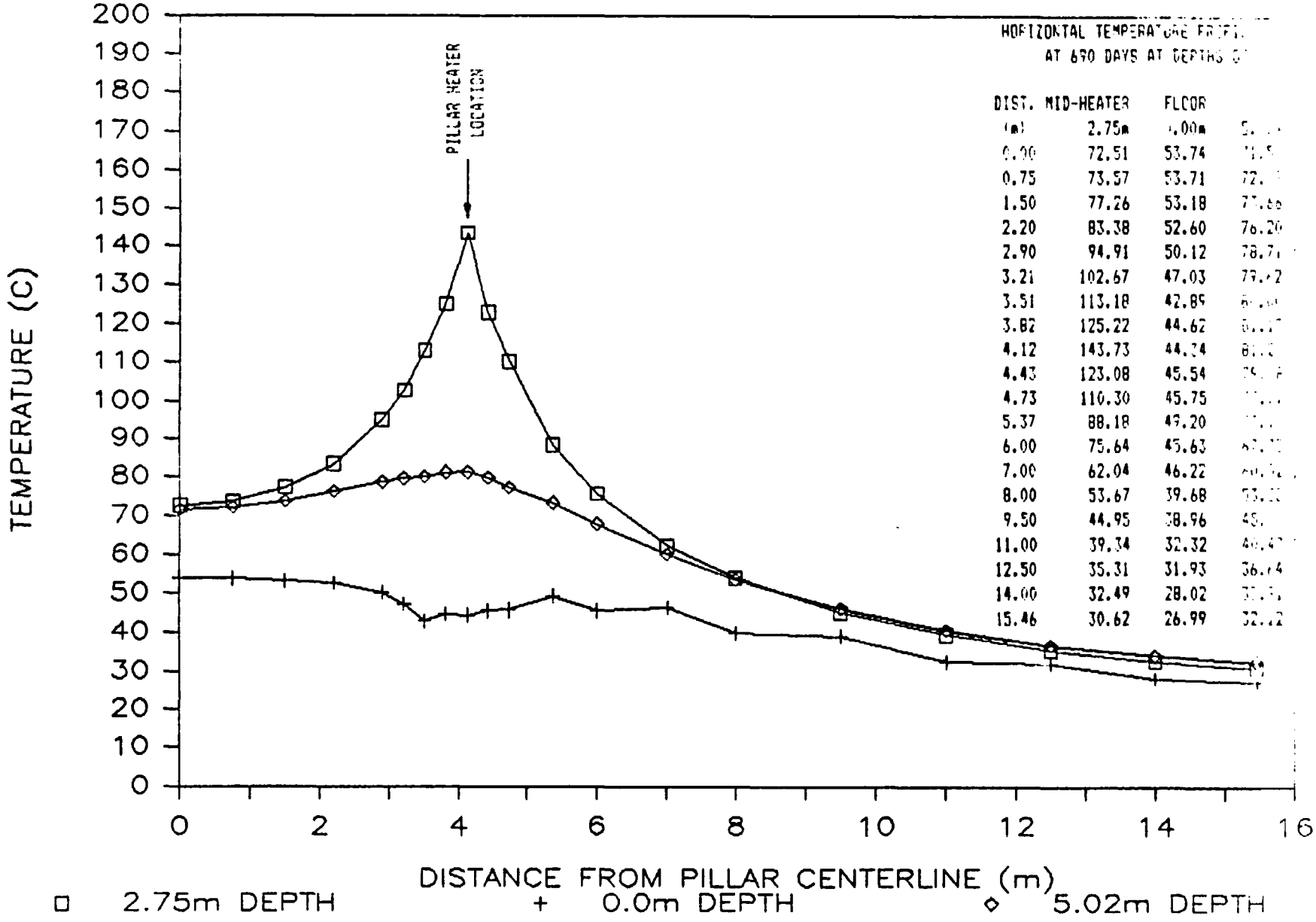

HORIZONTAL TEMPERATURE PROFILE
AT 690 DAYS AT DEPTHS OF

DIST. (m)	MID-HEATER 2.75m	FLOOR 4.00m	[illegible]
0.00	72.51	53.74	[illegible]
0.75	73.57	53.71	[illegible]
1.50	77.26	53.18	[illegible]
2.20	83.38	52.60	76.20
2.90	94.91	50.12	[illegible]
3.21	102.67	47.03	[illegible]
3.51	113.18	42.85	[illegible]
3.82	125.22	44.62	[illegible]
4.12	143.73	44.34	[illegible]
4.43	123.08	45.54	[illegible]
4.73	110.30	45.75	[illegible]
5.37	88.18	43.20	[illegible]
6.00	75.64	45.63	[illegible]
7.00	62.04	46.22	[illegible]
8.00	53.67	39.68	[illegible]
9.50	44.95	38.96	[illegible]
11.00	39.34	32.32	[illegible]
12.50	35.31	31.93	36.64
14.00	32.49	28.02	[illegible]
15.46	30.62	26.99	32.42

Figure 6.5-5 DOT Problem 6.1P - Room 3
Horizontal Temperature Profile
on Day 690

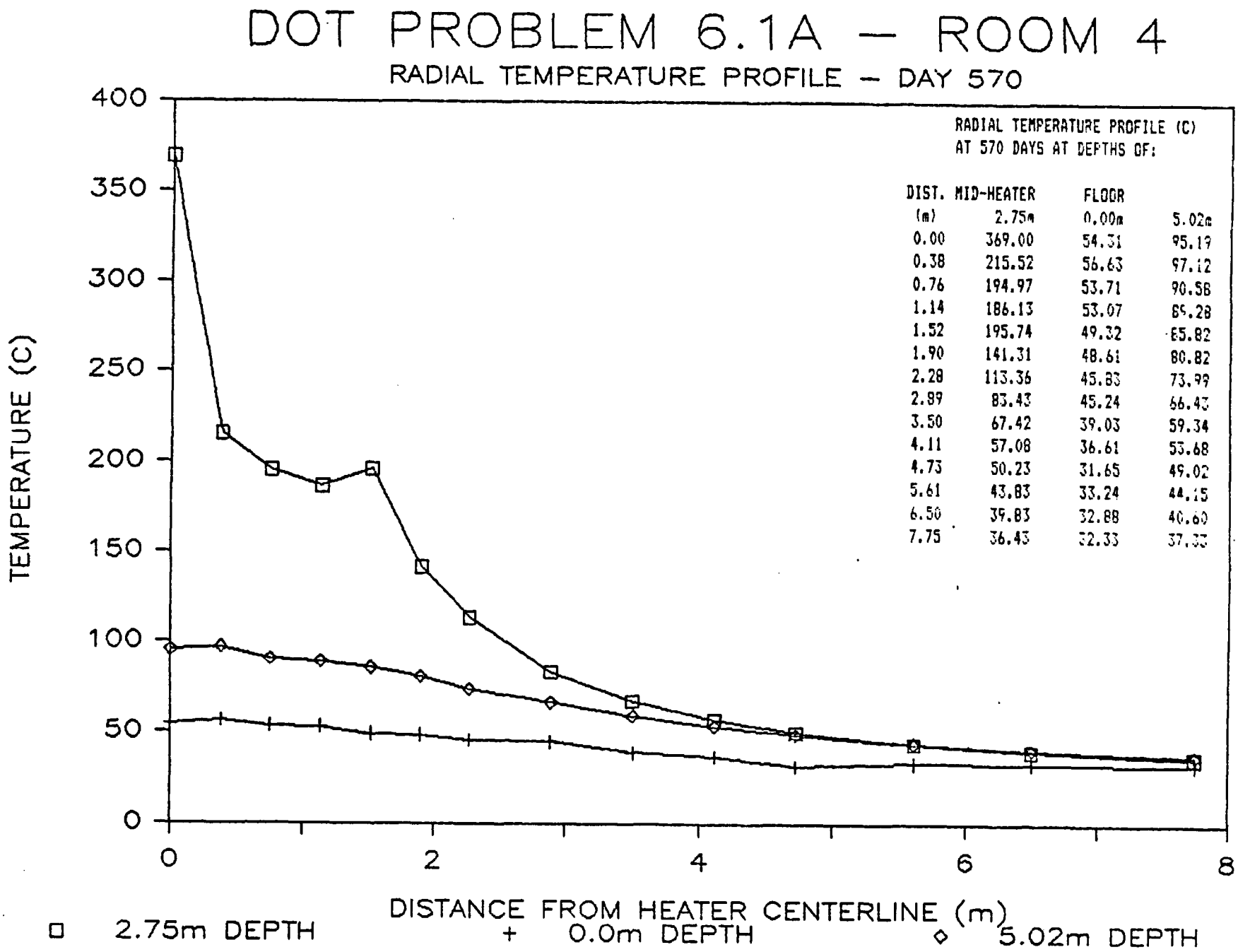

RADIAL TEMPERATURE PROFILE (C)
AT 570 DAYS AT DEPTHS OF:

DIST. (m)	MID-HEATER 2.75m	FLOOR 0.00m	5.02m
0.00	369.00	54.31	95.19
0.38	215.52	56.63	97.12
0.76	194.97	53.71	90.58
1.14	186.13	53.07	89.28
1.52	195.74	49.32	85.82
1.90	141.31	48.61	80.82
2.28	113.36	45.83	73.99
2.89	83.43	45.24	66.43
3.50	67.42	39.03	59.34
4.11	57.08	36.61	53.68
4.73	50.23	31.65	49.02
5.61	43.83	33.24	44.15
6.50	39.83	32.88	40.60
7.75	36.43	32.33	37.33

Figure 6.5-6 DOT Problem 6.1A - Room 4
Radial Temperature Profile
on Day 570

DOT – PROBLEM 6.1 (PSV) FIELD VALUES

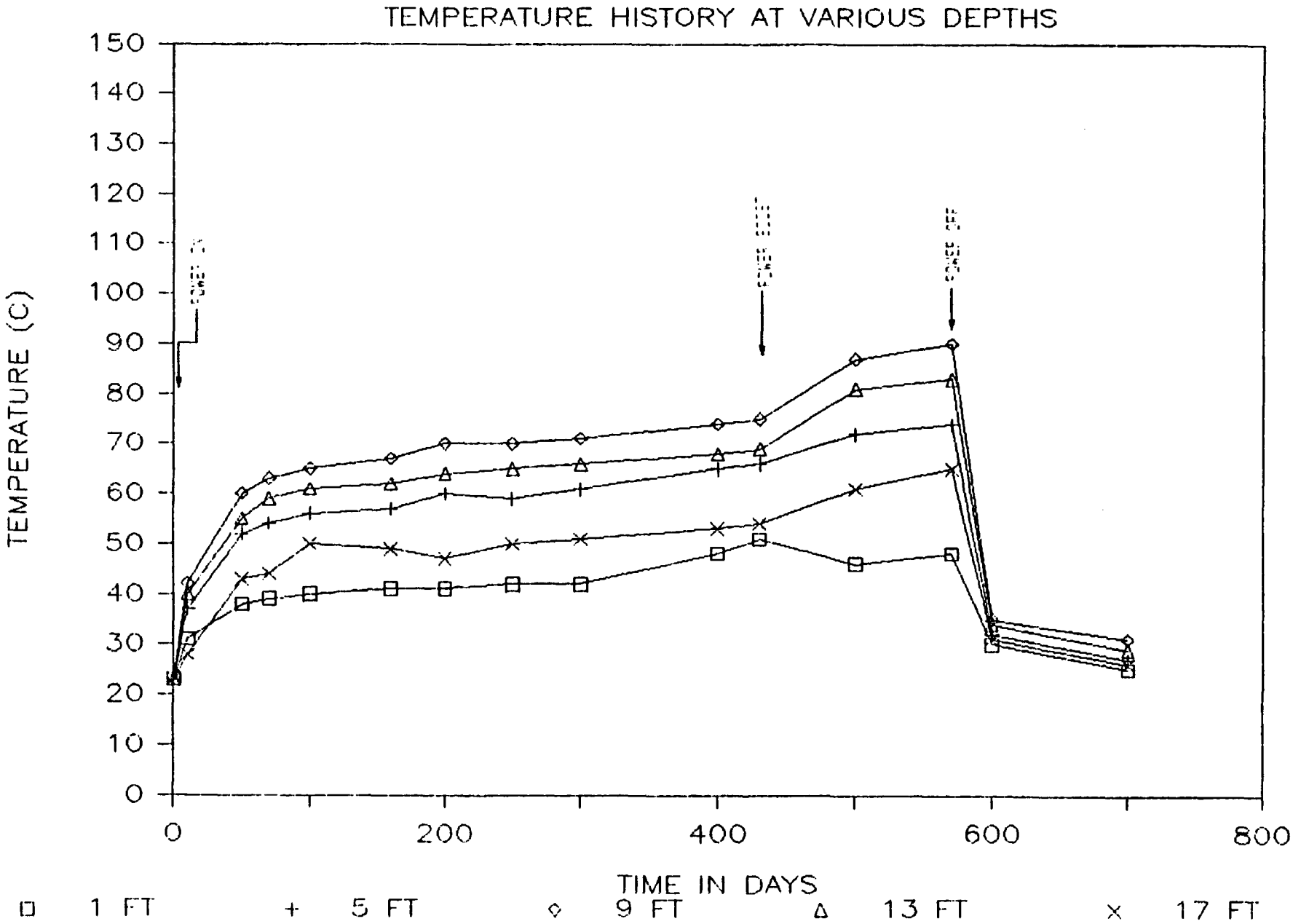

DOT Problem 6.1 PSV
Field Measured Temperatures at Various Depths
Below Floor of Room 4 at 8 ft Offset from
Center of Room

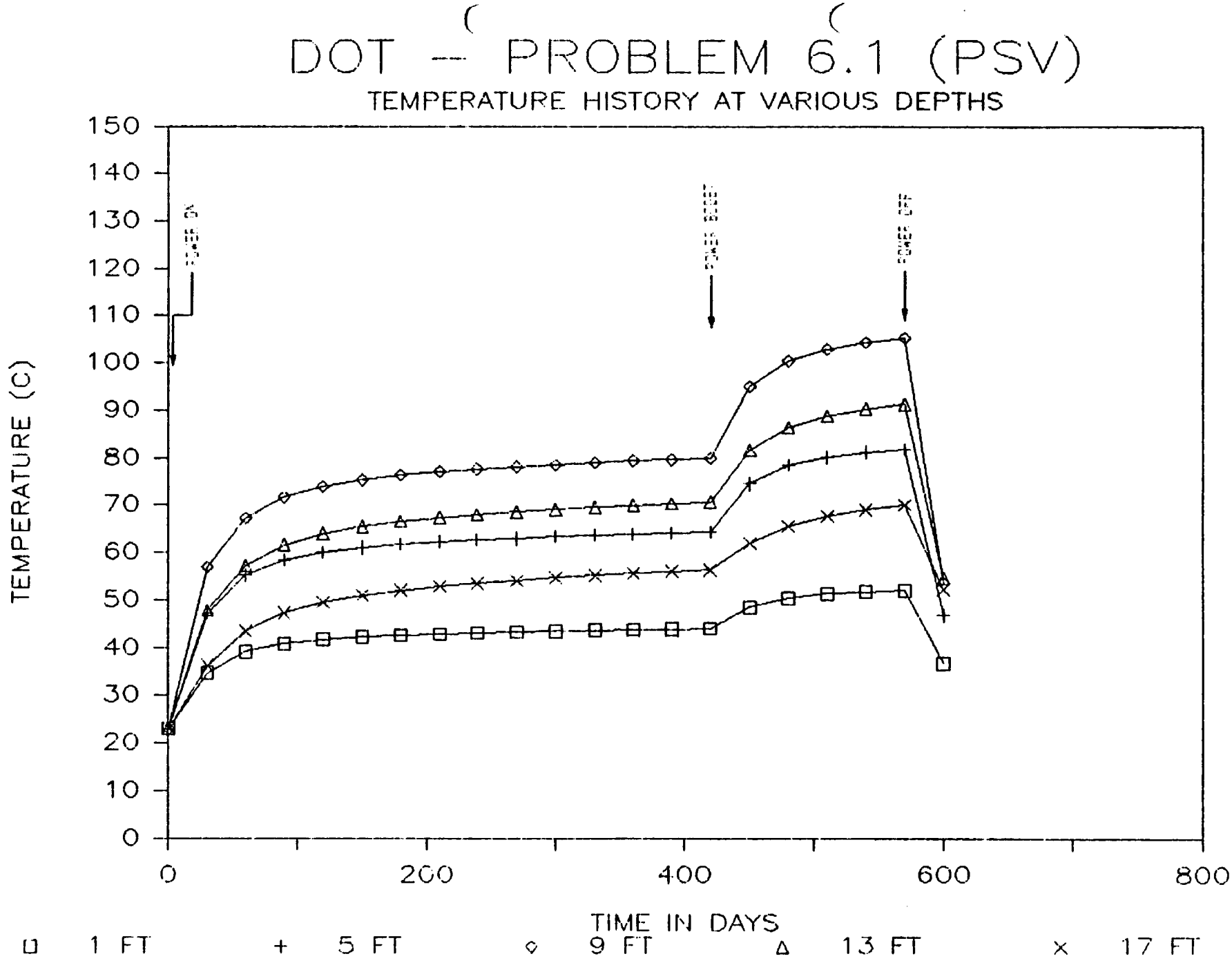

DOT Problem 6.1 PSV
Calculated Temperatures at Various Depths
Below Floor of Room 4 at 8 ft Offset from
Center of Room

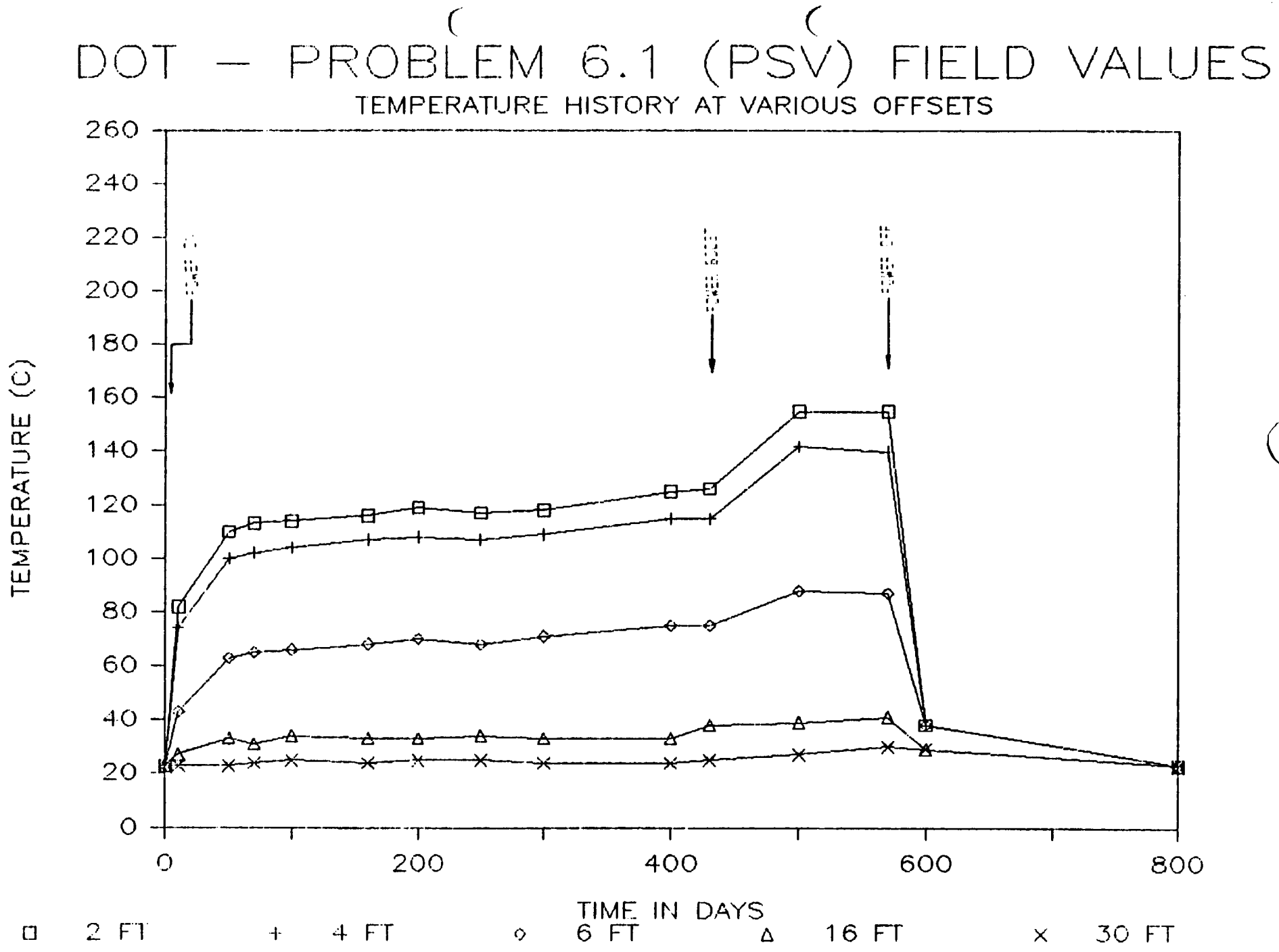

DOT Problem 6.1 PSV
Field Measured Temperatures at Various Offset
Locations from Center of Room 1 at
9 ft Depth Below Floor

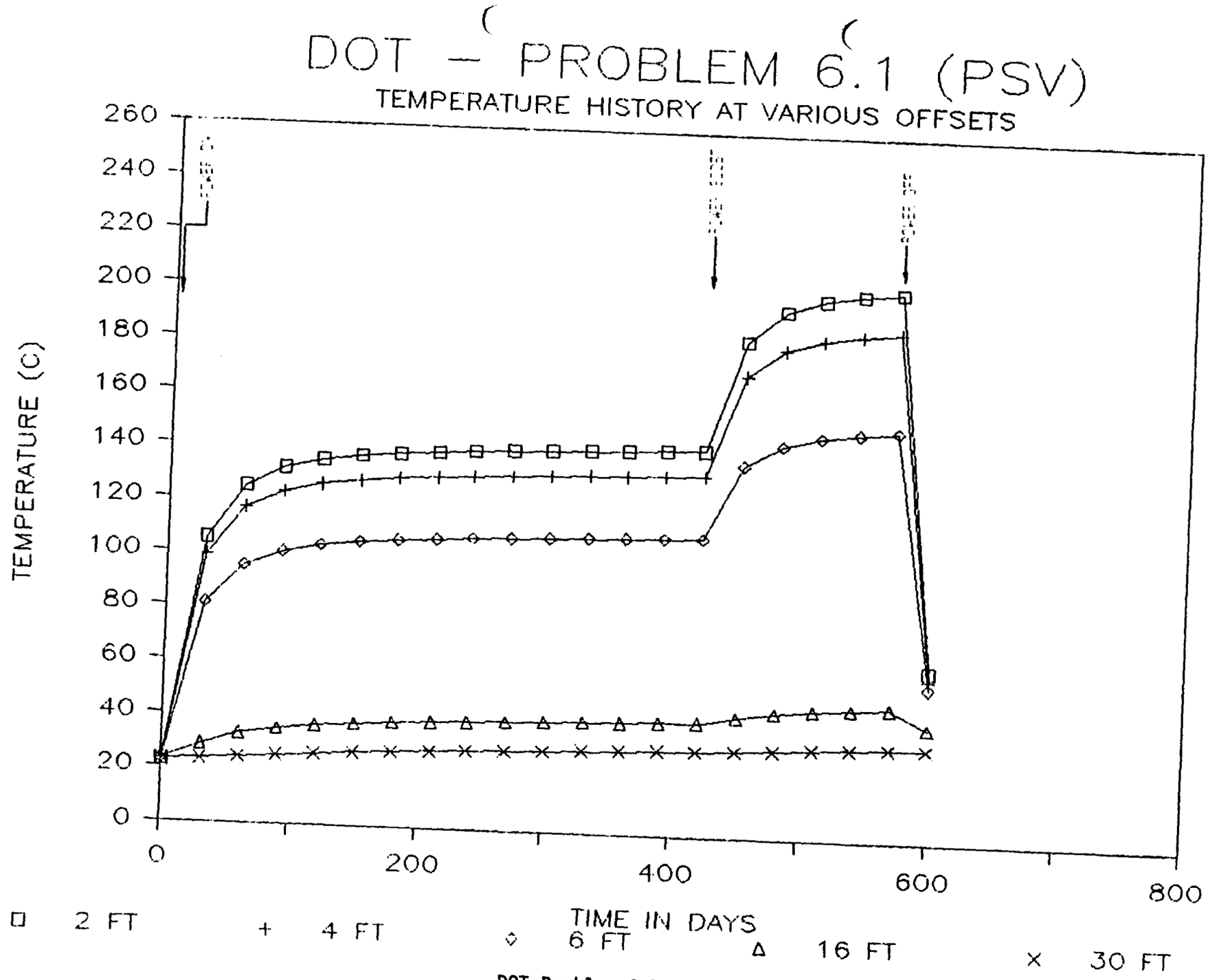

DOT Problem 6.1 PSV
Calculated Temperatures at Various Offset
Locations from Center of Room 1 at
9 ft Depth Below Floor

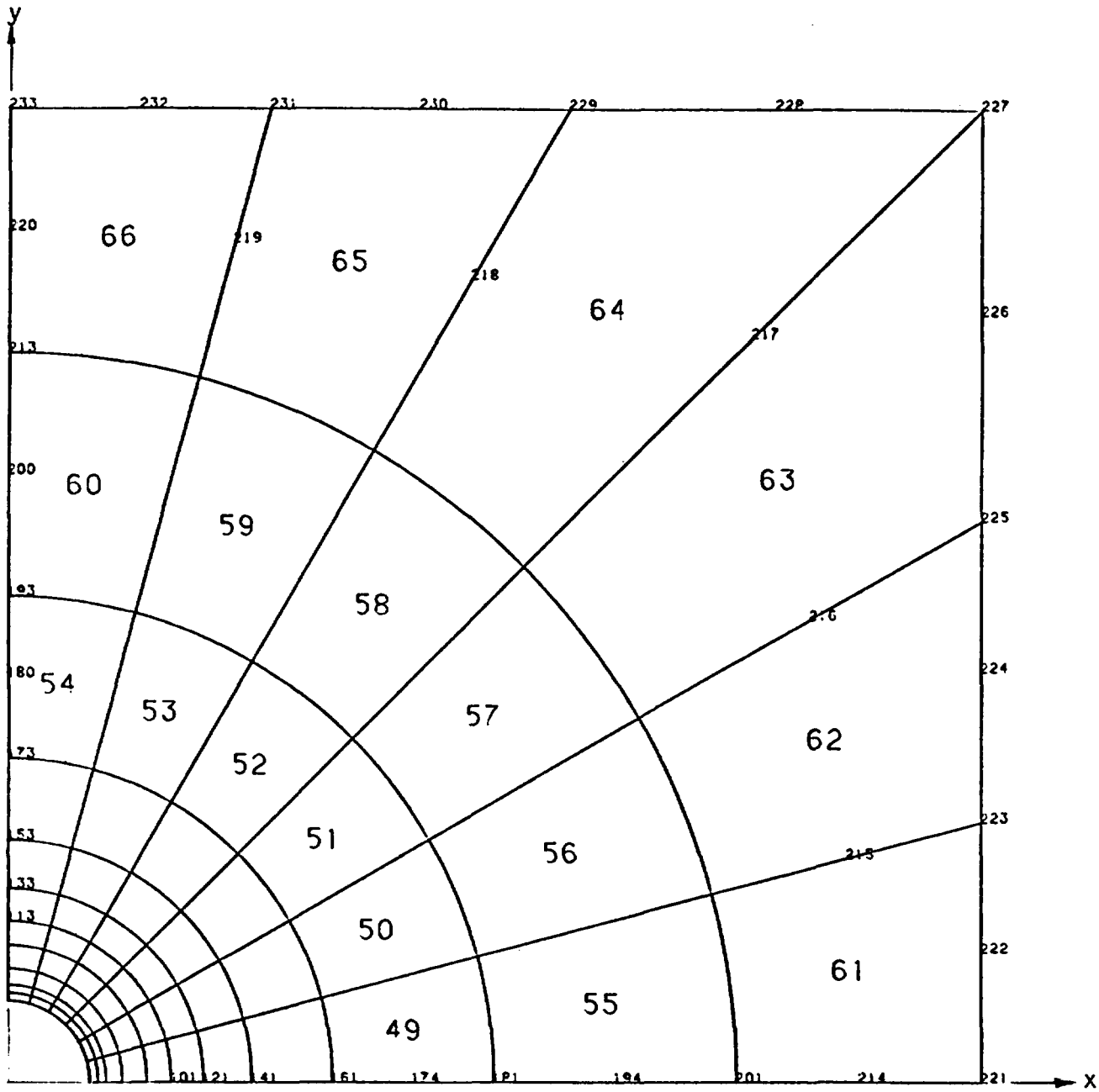

MATLOC Problem 3.2a - Finer Mesh
Finite Element Mesh

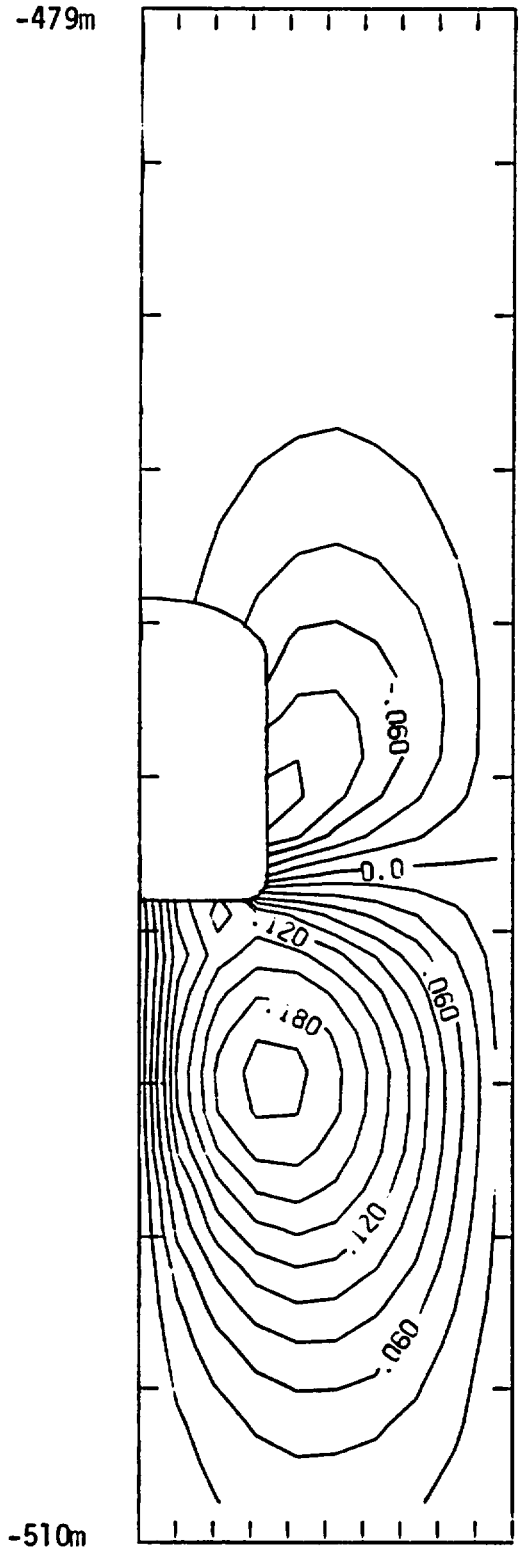

CØNTØUR FRØM -0.12000 TØ 0.22000 CØNTØUR INTERVAL ØF 0.20000E-01
X INTERVAL= 0.75000 Y INTERVAL= 3.000

VISCOT Problem 5.2 (Basalt)
Horizontal Displacements (mm)
at 10 years

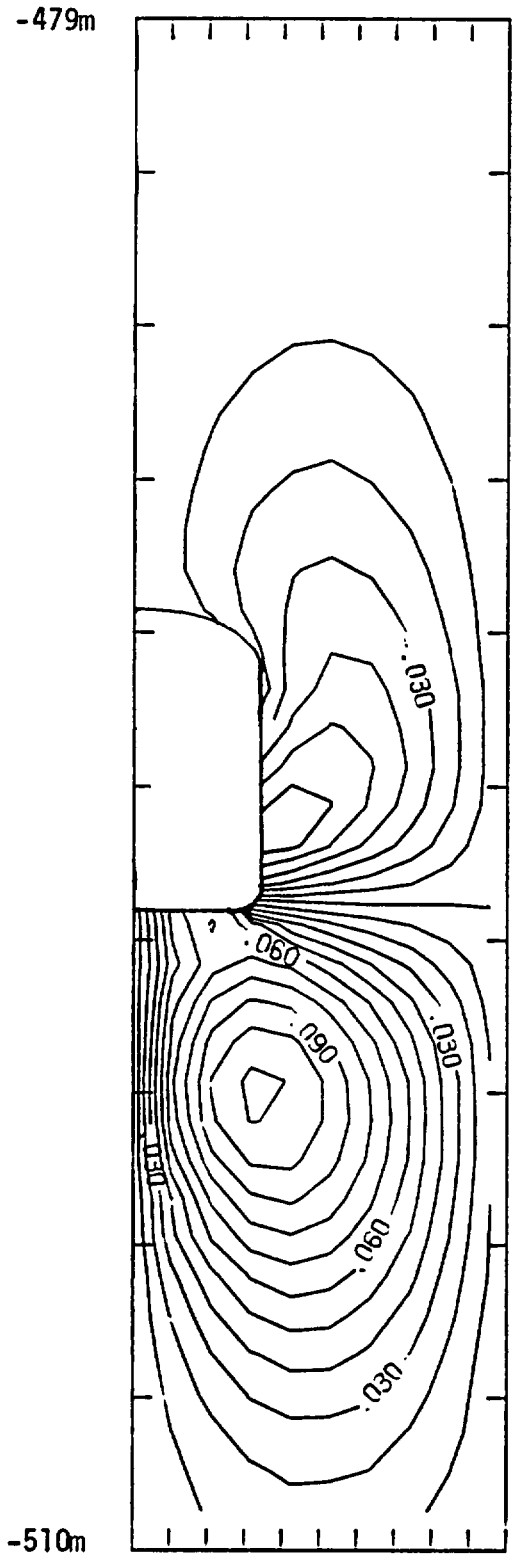

CØNTØUR FRØM -0.70000E-01 TØ 0.12000 CØNTØUR INTERVAL ØF 0.10000E-01
X INTERVAL = 0.75000 Y INTERVAL = 3.000

VISCOT Problem 5.2 (Basalt)
Horizontal Displacements (mm)
at 30 years

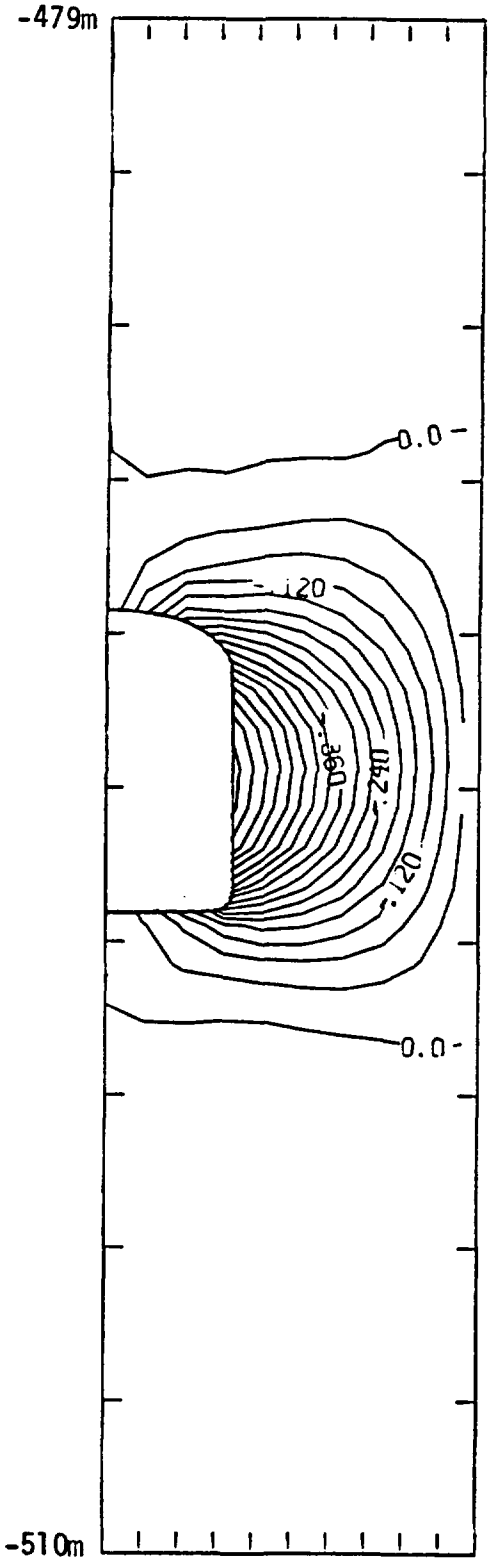

CØNTØUR FRØM -0.72000 TØ 0.40000E-01 CØNTØUR INTERVAL ØF 0.40000E-01
X INTERVAL= 0.75000 Y INTERVAL= 3.1000

VISCOT Problem 5.2 (Basalt)
Horizontal Displacements (mm)
at 100 years

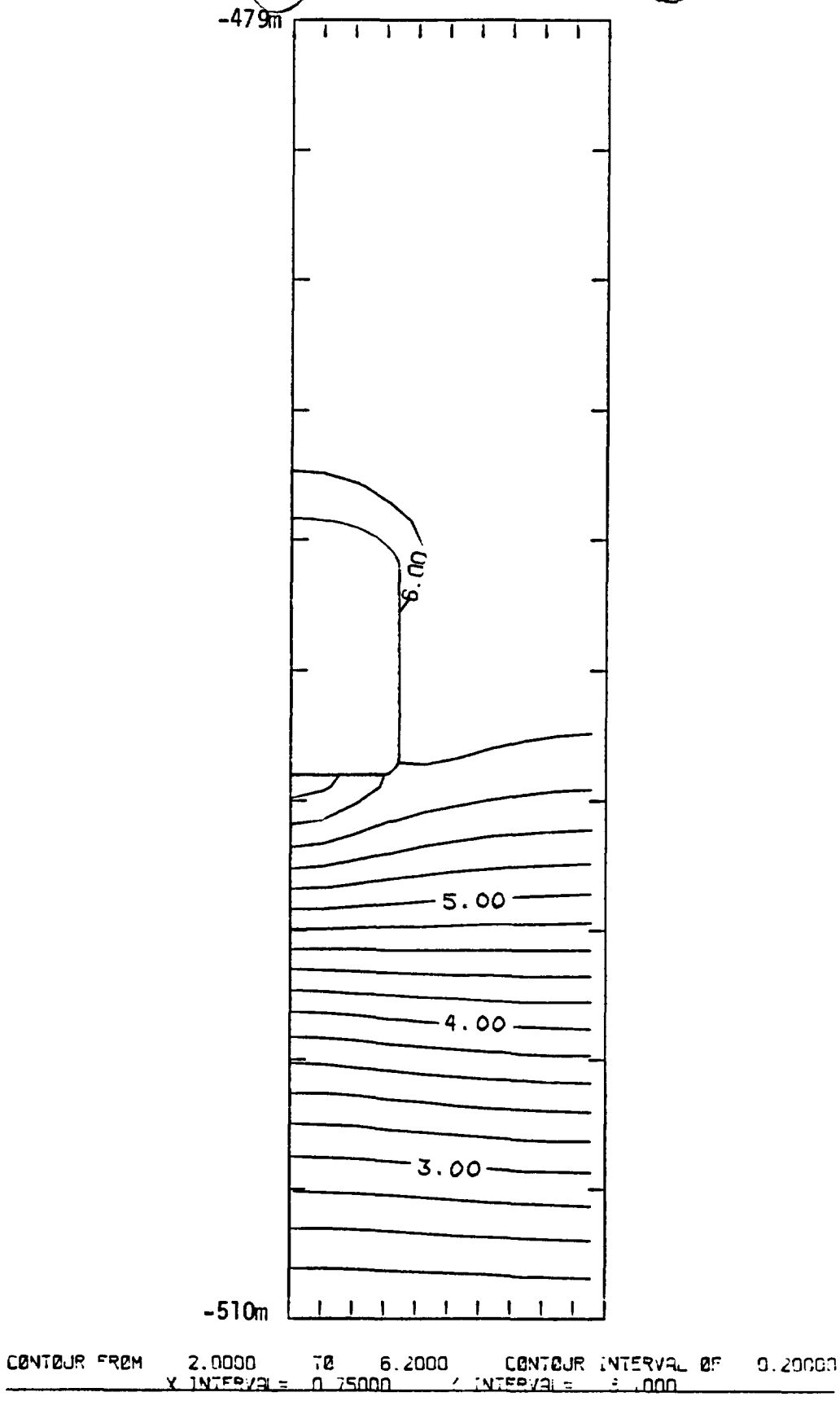

VISCOT Problem 5.2 (Basalt)
Vertical Displacements (mm)
at 10 years

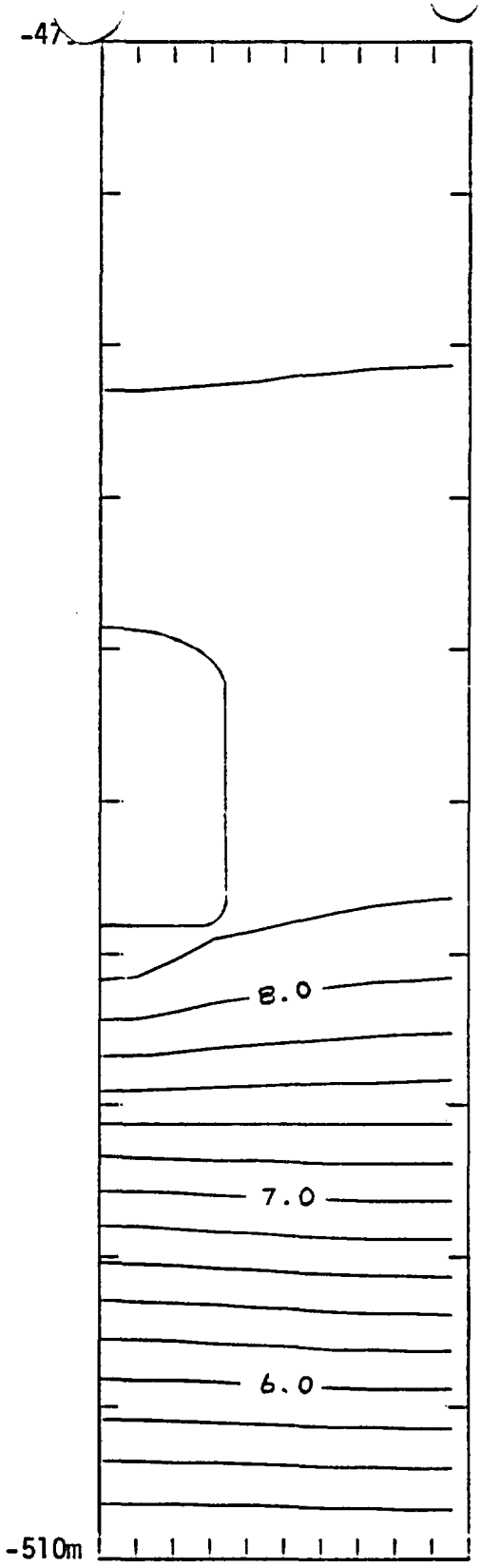

CØNTØUR FRØM 5.0000 TØ 8.6000 CØNTØUR INTERVAL ØF 0.20000
X INTERVAL = 0.75000 Y INTERVAL = 3.1000

VISCOT Problem 5.2 (Basalt)
Vertical Displacements (mm)
at 30 years

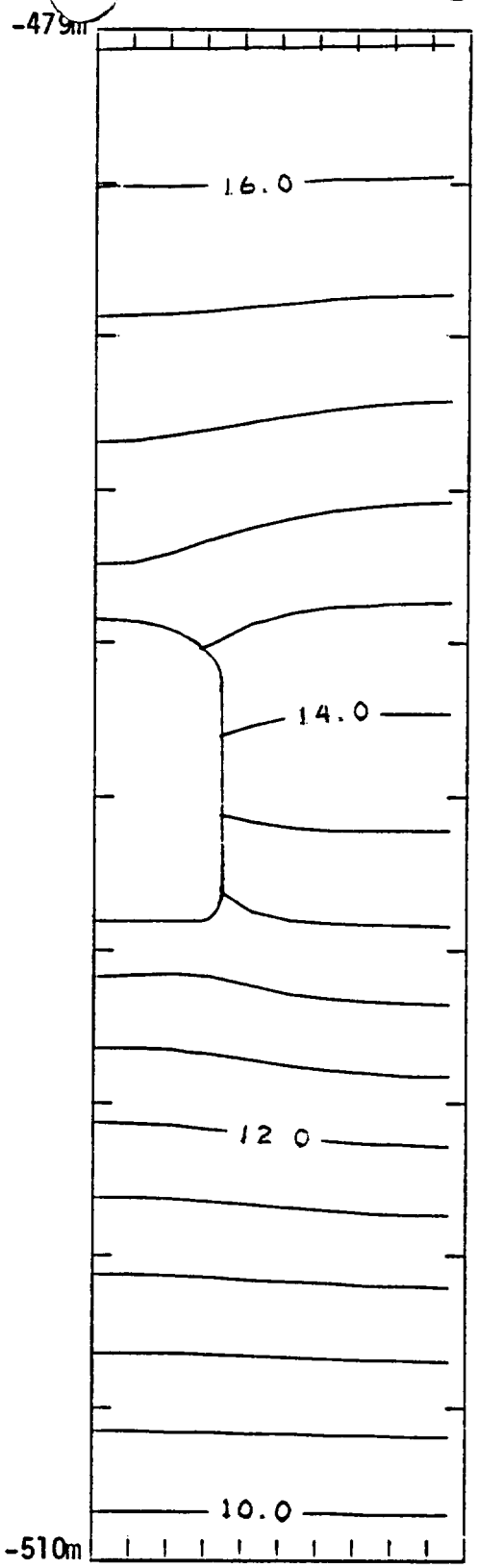

CØNTØUR FRØM 9.6000 TØ 16.800 CØNTØUR INTERVAL ØF 0.40000
X INTERVAL = 0.75000 Y INTERVAL = 3.000

VISCOT Problem 5.2 (Basalt)
Vertical Displacements (mm)
at 100 years

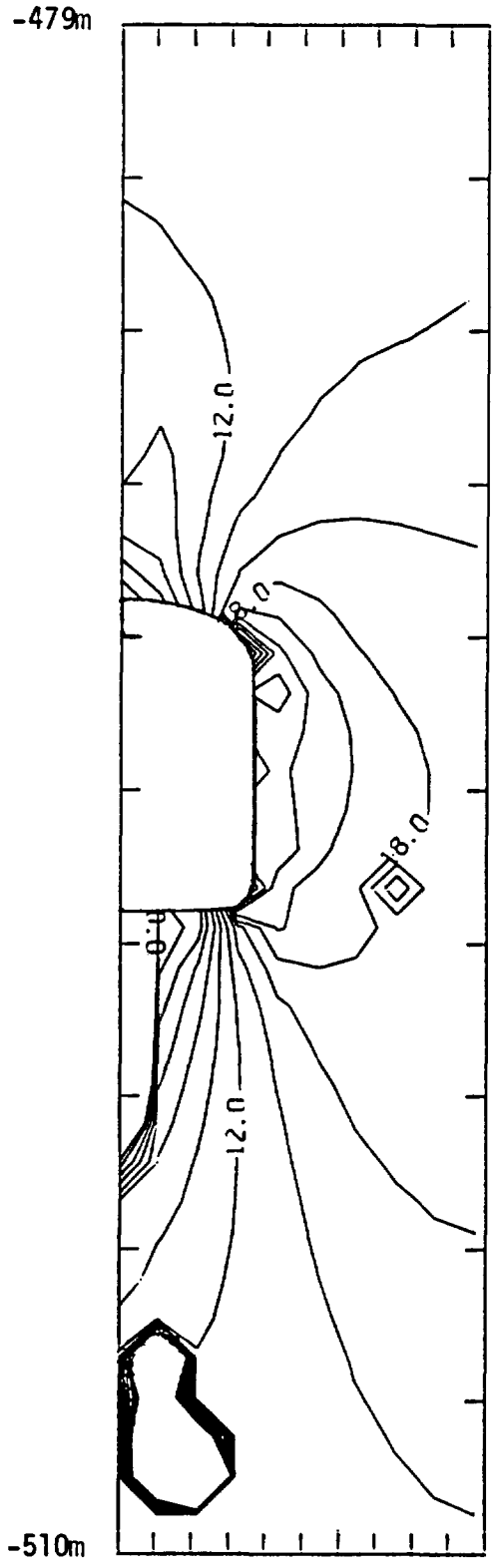

CØNTØUR FRØM -2.0000 TØ 40.000 CØNTØUR INTERVAL ØF 2.0000
X INTERVAL = 0.7600 Y INTERVAL = 3.0000

VISCOT Problem 5.2 (Basalt)
Major Principal Stresses (MPa)
at 10 years

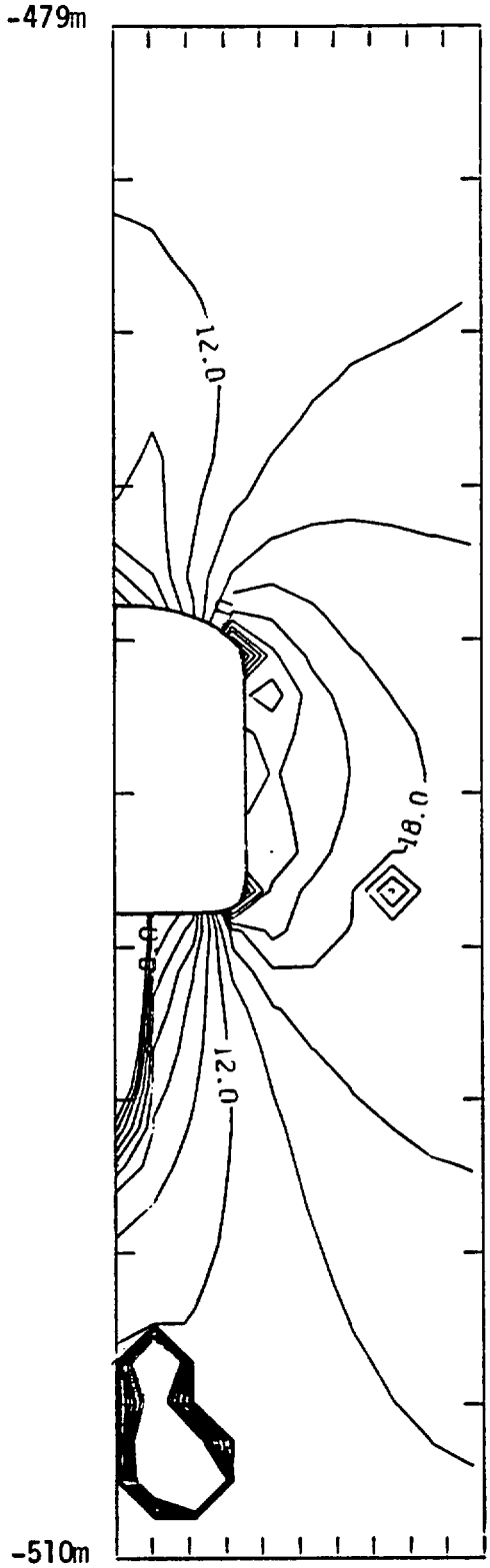

CØNTØUR FRØM -4.0000 TØ 40.000 CØNTØUR INTERVAL ØF 2.0000
X INTERVAL = 0.71600 Y INTERVAL = 3.0110

VISCOT Problem 5.2 (Basalt)
Major Principal Stresses (MPa)
at 30 years

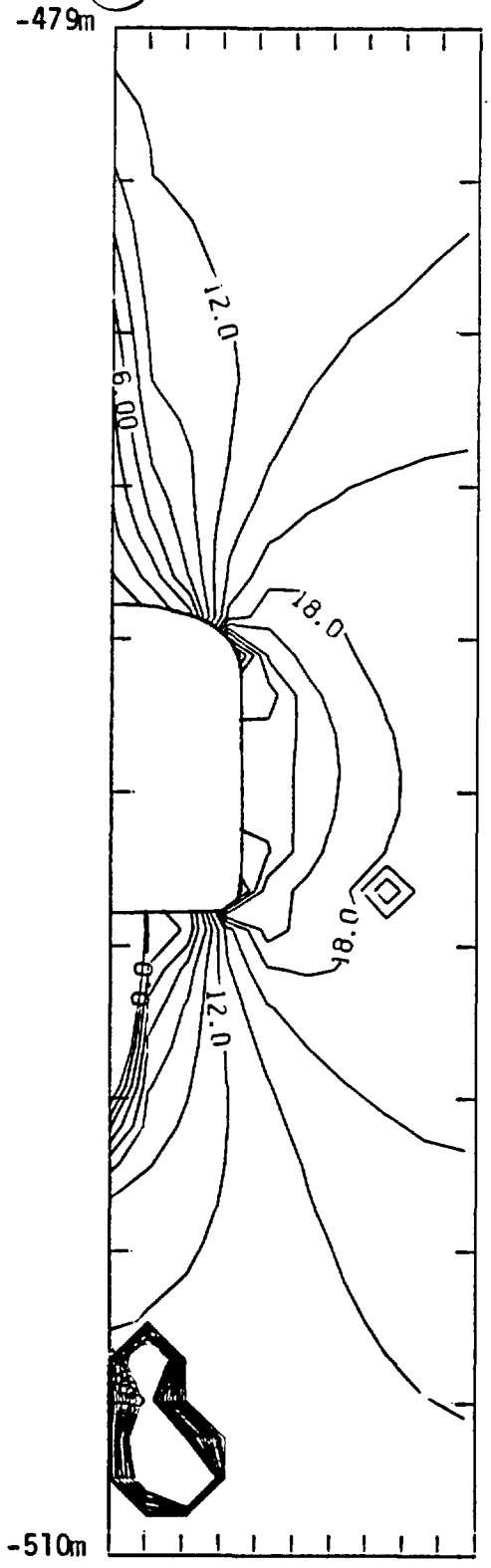

CØNTØUR FRØM -2.0000 TØ 38.000 CØNTØUR INTERVAL ØF 2.0000
X INTERVAL = 0.71600 Y INTERVAL = 3.0000

VISCOT Problem 5.2 (Basalt)
Major Principal Stresses (MPa)
at 100 years

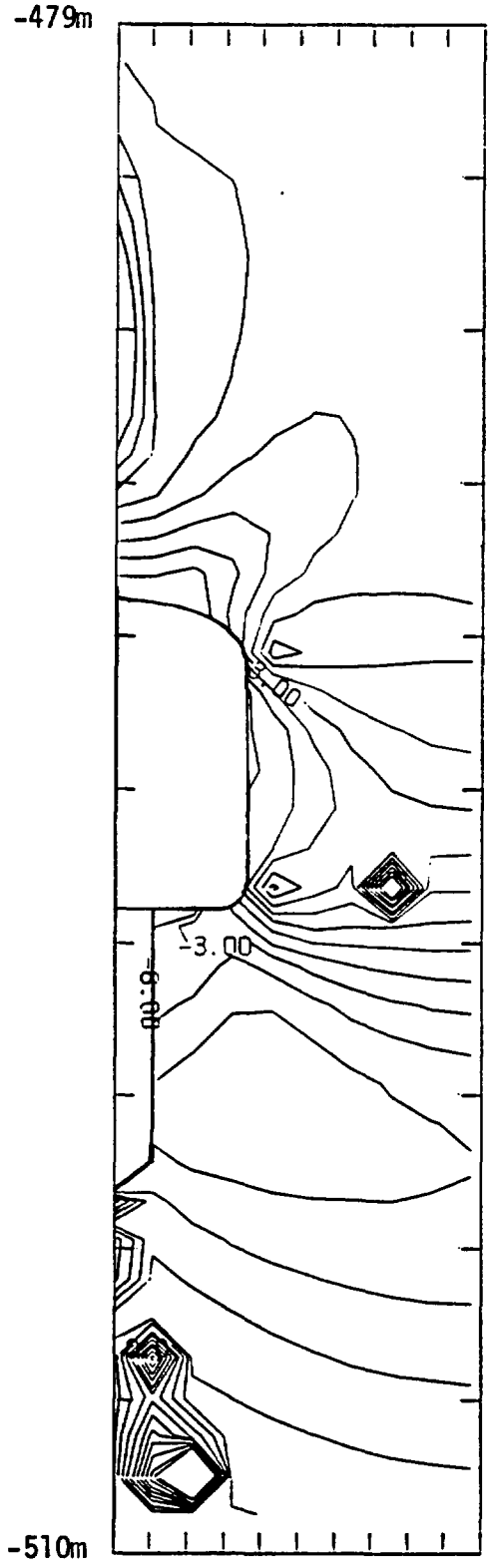

CØNTØUR FRØM -7.0000 TØ 8.0000 CØNTØUR INTERVAL ØF 1.0000
X INTERVAL = 0.71600 Y INTERVAL = 3.0110

VISCOT Problem 5.2 (Basalt)
Minor Principal Stresses (MPa)
at 10 years

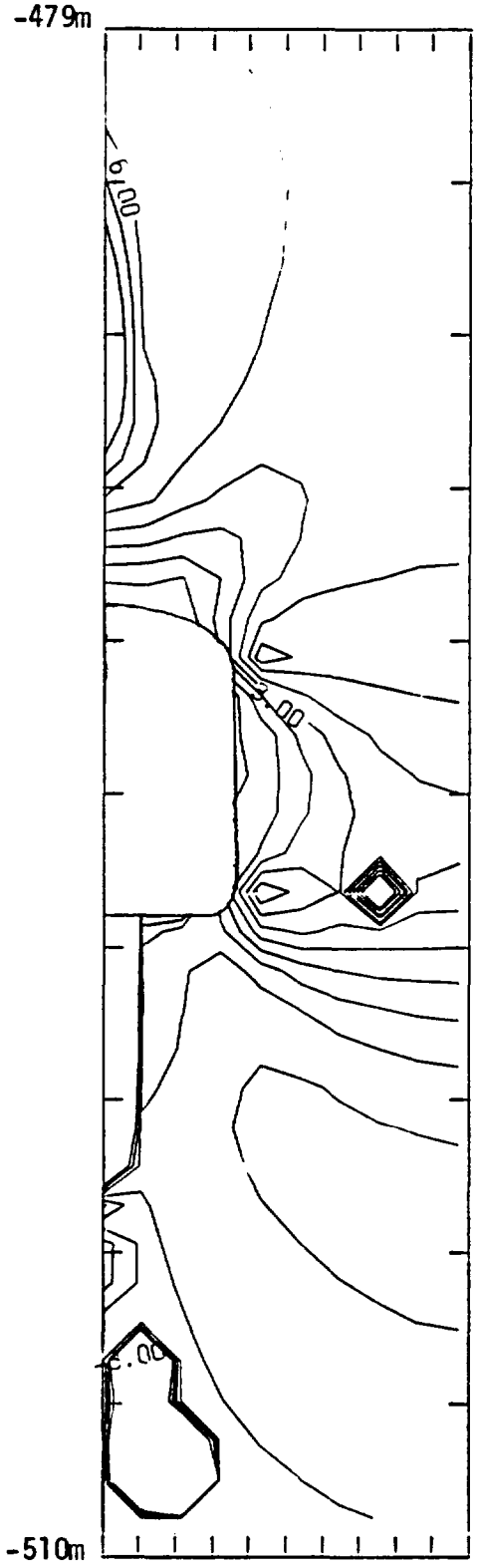

CØNTØUR FRØM -5.0000 TØ 8.0000 CØNTØUR INTERVAL ØF 1.0000
X INTERVAL = 0.21600 Y INTERVAL = 3.0100

VISCOT Problem 5.2 (Basalt)
Minor Principal Stresses (MPa)
at 30 years

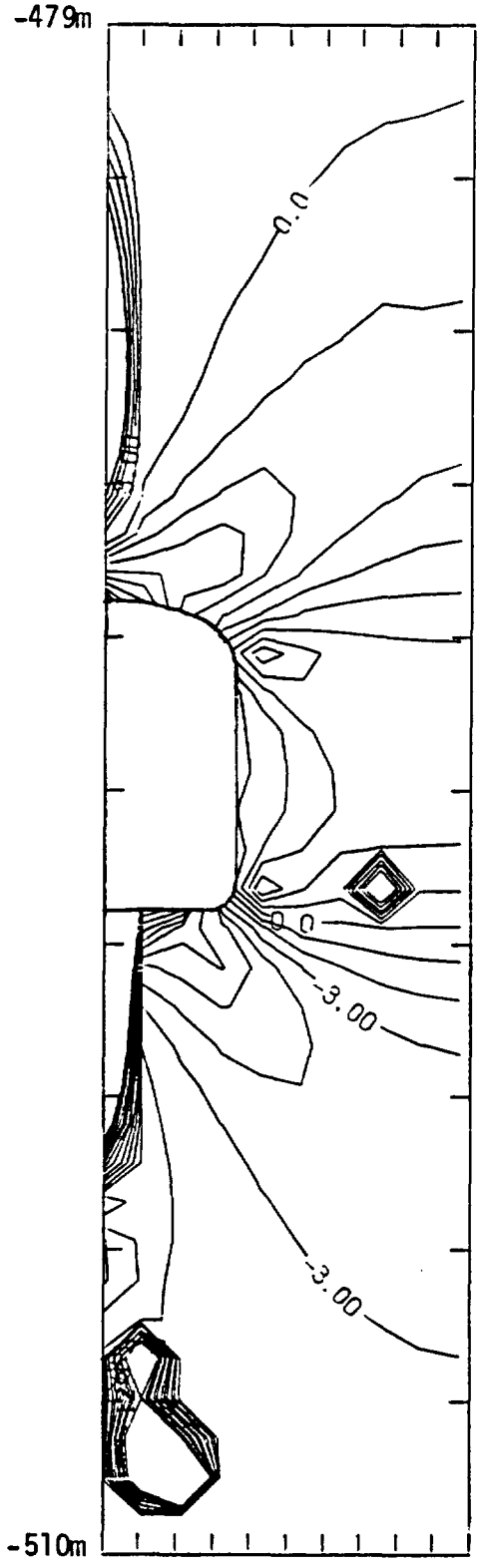

CONTOUR FROM -13.000 TO 6.0000 CONTOUR INTERVAL OF 1.0000
X INTERVAL= 0.71600 Y INTERVAL= 3.0110

VISCOT Problem 5.2 (Basalt)
Minor Principal Stresses (MPa)
at 100 years