SI
APERTURE
CARD

Also Available On
Aperture Card

NOTES:
1. FOR QUALITY ASSURANCE ARRANGEMENT, SEE GALA 6.2.1.-0001
2. FOR GENERAL NOTES, SEE DRAWING C2.

PROFILE
SCALE: 1"=40' HORIZ., 1"=10' VERT.

PLAN
SCALE: 1"=40'

NORTH

FOR REFERENCE DRAWINGS, SEE DRAWING T2
FOR ABBREVIATIONS AND SYMBOLS, SEE DRAWING T3, T4, AND T5

NO.	DATE	REVISIONS	BY	CK	SUP	CK	PE	CK	CON	CK

U. S. DEPARTMENT OF ENERGY
NEVADA OPERATIONS OFFICE — LAS VEGAS NEVADA

DESIGNED	DRAWN	NEVADA NUCLEAR WASTE STORAGE INVESTIGATION; EXPLORATORY SHAFT FACILITY
L.H.A.	DW/DL	G4 ROAD
CHECKED		PLAN & PROFILE
SAFETY N/A	QA P.I.S.	
PROJECT ENGINEER		

SUBMITTED BY: HOLMES & NARVER, INC. — AGENCY APPROVAL — DOE ACCEPTANCE — DATE: 12-15-91

HOLMES & NARVER, INC.
ARCHITECTS-ENGINEERS
ENERGY SUPPORT DIVISION
1050 E. FLAMINGO ROAD LAS VEGAS NEVADA 89109

I.D. NO. 000000
W.B.S. NO. 1.2.3.2.1.3
DRAWING NUMBER JS-025-ESF-C24
SHEET 19 OF 41

TITLE I

800104017 2-112

SI
APERTURE
CARD

Also Available On
Aperture Card

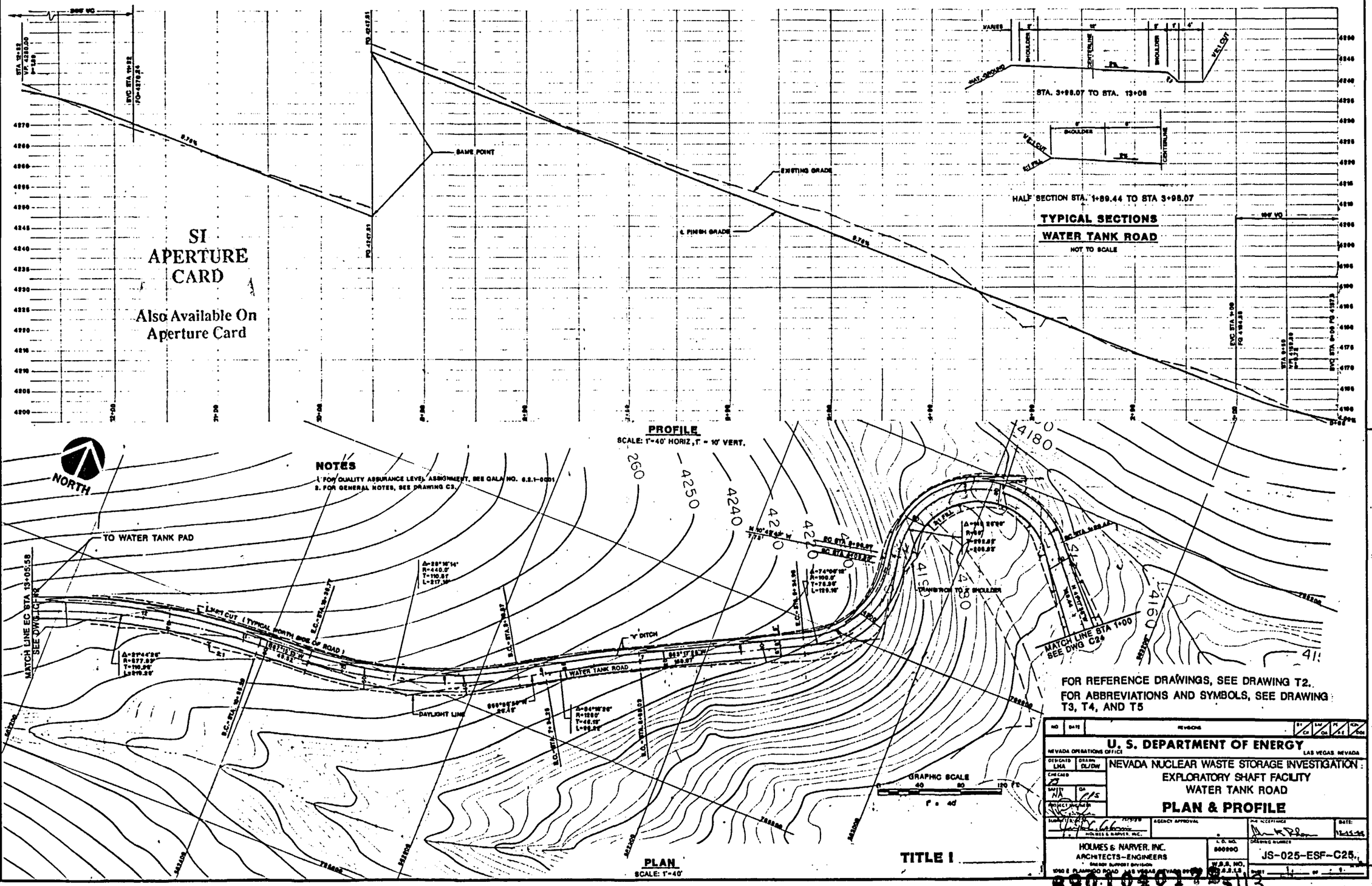

U. S. DEPARTMENT OF ENERGY
NEVADA OPERATIONS OFFICE — LAS VEGAS, NEVADA

NEVADA NUCLEAR WASTE STORAGE INVESTIGATION
EXPLORATORY SHAFT FACILITY
WATER TANK ROAD

PLAN & PLOT

HOLMES & NARVER, INC.
ARCHITECTS–ENGINEERS
ENERGY SUPPORT DIVISION
1050 E. FLAMINGO ROAD LAS VEGAS, NEVADA 89119

DRAWING NUMBER: JS-025-ESF-C25.

8901040178 2113

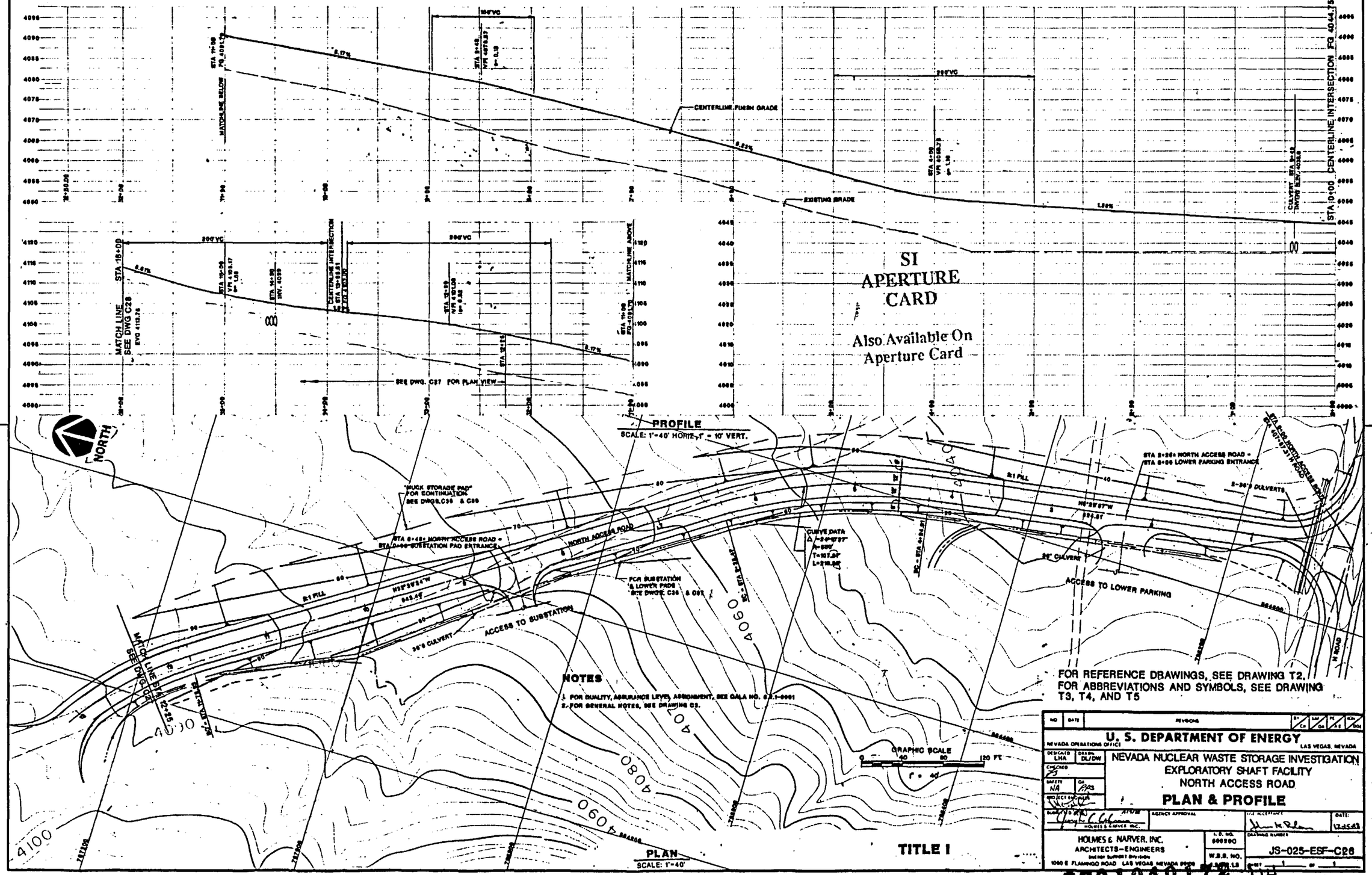

SI APERTURE CARD

Also Available On Aperture Card

8901040172-114

SI
APERTURE
CARD

Also Available On
Aperture Card

PROFILE
SCALE: 1"=40' HORIZ, 1" = 10' VERT.

PLAN
SCALE: 1"=40'

NOTES
1. FOR QUALITY ASSURANCE LEVEL ASSIGNMENT, SEE QALS NO. 6.2.1-8901
2. FOR GENERAL NOTES, SEE DRAWING C2.

FOR REFERENCE DRAWINGS, SEE DRAWING T2.
FOR ABBREVIATIONS AND SYMBOLS, SEE DRAWING T3, T4, AND T5

GRAPHIC SCALE
0 40 80 120 FT
1" = 40'

TITLE 1

NO	DATE	REVISIONS	BY	CK	EA	QA	PE	A-E	KEY DWG

U. S. DEPARTMENT OF ENERGY
NEVADA OPERATIONS OFFICE — LAS VEGAS, NEVADA

NEVADA NUCLEAR WASTE STORAGE INVESTIGATION
EXPLORATORY SHAFT FACILITY
HAUL ROAD

PLAN & PROFILE

DESIGNED LA	DRAWN DL/DW	DOE ACCEPTANCE	DATE: 12-15-88
CHECKED RB			
SAFETY NA	QA RB3		
PROJECT ENGINEER			
PLANNED BY: HOLMES & NARVER INC. 12/7/88	AGENCY APPROVAL		

HOLMES & NARVER, INC.
ARCHITECTS-ENGINEERS
ENERGY SUPPORT DIVISION
1050 E. FLAMINGO ROAD LAS VEGAS NEVADA 89109

L.D. NO. 800890 — DRAWING NUMBER: JS-025-ESF-C27:
W.B.S. NO. 1.2.3.2.1.3 — SHEET 1 OF 1

8901040173-15

SI
APERTURE
CARD

Also Available On
Aperture Card

PROFILE
SCALE: 1"=40' HORIZ, 1" = 10' VERT.

NORTH

PLAN
SCALE: 1"=40'

NOTES
1. FOR QUALITY ASSURANCE LEVEL ASSIGNMENT, SEE QALA NO. S.S.L-0001.
2. FOR GENERAL NOTES, SEE DRAWING C3.

FOR REFERENCE DRAWINGS, SEE DRAWING T2.
FOR ABBREVIATIONS AND SYMBOLS, SEE DRAWING T3, T4, AND T5

TITLE I

U. S. DEPARTMENT OF ENERGY
NEVADA OPERATIONS OFFICE — LAS VEGAS, NEVADA

NEVADA NUCLEAR WASTE STORAGE INVESTIGATION
EXPLORATORY SHAFT FACILITY
EXPLOSIVE STORAGE ROAD
PLAN & PROFILE

HOLMES & NARVER, INC.
ARCHITECTS-ENGINEERS
1050 E. FLAMINGO ROAD LAS VEGAS NEVADA 89109

L.D. NO. 800200
W.B.S. NO.
DRAWING NUMBER JS-025-ESF-C28.

8901040172-116

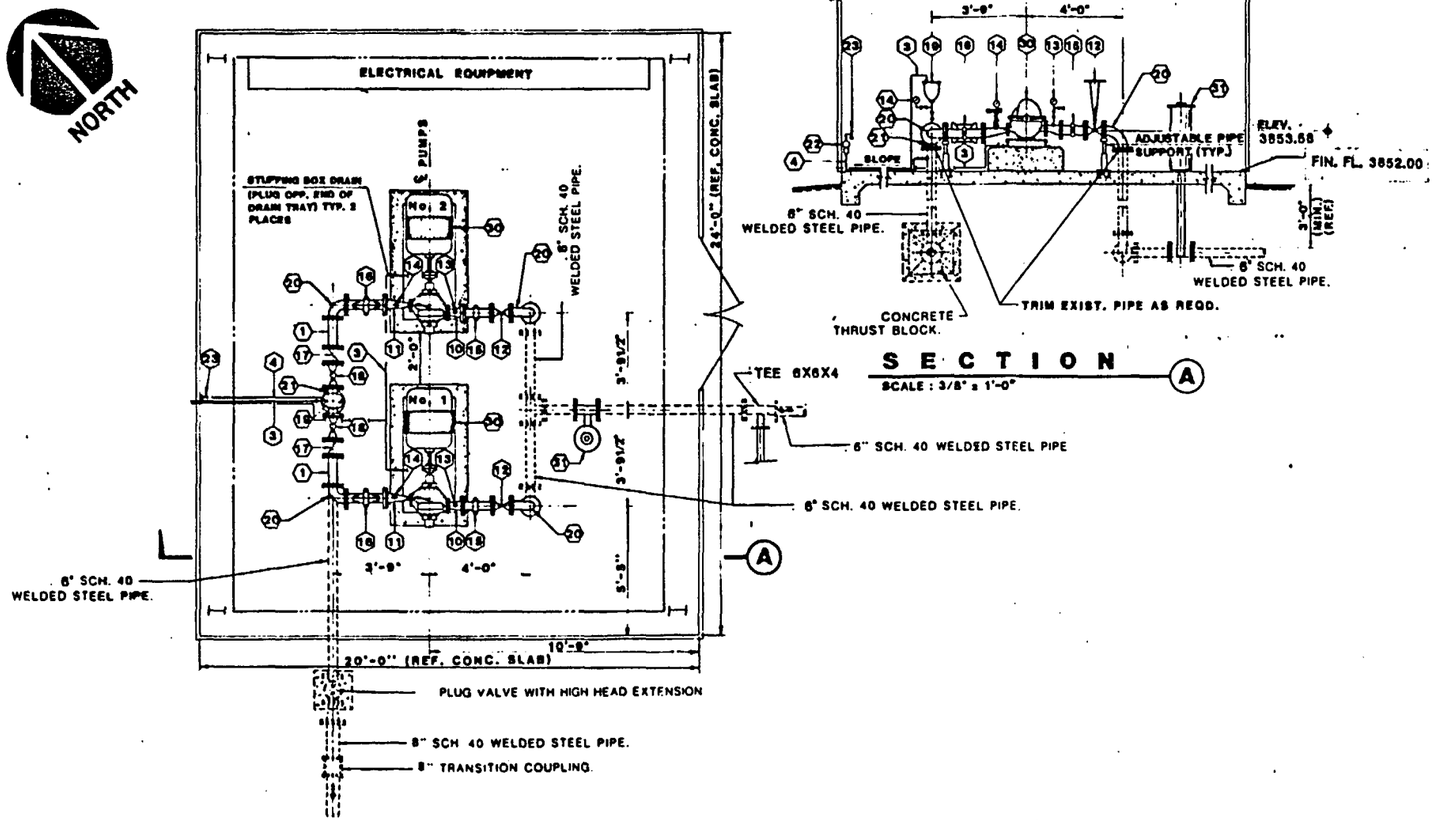

LAYOUT

SCALE : 3/8" = 1'-0"

SI
APERTURE
CARD

Also Available On
Aperture Card

NOTES

1. ALL VALVES & FLANGES ON THE SUCTION SIDE TO BE RATED @ 150 P.S.I. & ALL VALVES & FLANGES OF THE DISCHARGE SIDE TO BE RATED @ 250 P.S.I.
2. MINIMUM WORKING PRESSURE TO BE DEFINED ON TITLE II DRAWINGS.
3. FOR QUALITY ASSURANCE LEVEL ASSIGNMENT, SEE QALA NO. 6.2.2-0001, 1.2.6-0001
4. FOR GENERAL NOTES, SEE DRAWING C3.

FOR REFERENCE DRAWINGS, SEE DRAWING T2,

FOR ABBREVIATIONS AND SYMBOLS, SEE DRAWING T3, T4, AND T5

8901040172-117

PIPING SCHEDULE

LINE	DIA.	MIN. WALL THK.	PIPE MATERIAL
1	6"	SCH. 40	WELDED ST'L.
2		NOT USED.	
3	1"	SCH. 40	GALV. ST'L.
4	3/4"	SCH. 40	GALV. ST'L.

VALVES & FITTINGS SCHEDULE

ITEM	DESCRIPTION (VENDOR'S CATALOG No. OR OTHER APPROVED)	MIN. W.P.	No. REQ'D.
10	3"x6" ECC. REDUCER	150 psi	2
11	11/2"x6" ECCENTRIC REDUCER	250 psi	2
12	6" GATE VALVE W/HANDWHEEL (OSY)	150 psi	2
13	PRESSURE GAUGE	0-25 psi	2
14	PRESSURE GAUGE /RELEASE VALVE	0-500 psi	2
15	6" VICTAULIC COUPLING	150 psi	2
16	6" VICTAULIC CPL'G. W/HARNESS SET	250 psi	2
17	6" SILENT CHECK VALVE	250 psi	2
18	6" PLUG VALVE W/OPERATOR ARM	250 psi	2
19	1" COMB. AIR RELEASE VALVE	250 psi	1
20	6" SCH. 40 FLG. 90° BEND.		4
21	6" SCH. 40 FLG. TEE.		1
22	3/4" PRESSURE REDUCING VALVE	250 psi	1
23	3/4" HOSE BIB		1

EQUIPMENT SCHEDULE

ITEM	DESCRIPTION (VENDOR'S CATALOG No. OR OTHER APPROVED)	No. REQ'D.
30	HORIZONTALLY SPLIT CASE CENTRIFUGAL PUMP, 150 gpm AT 545 FT. TDH EFF. 50%, 50HP-3550 RPM-480VOLT-3PHASE O.D.P. MOTOR. (OVERLOAD PROTECTED)	2
31	TRACER INJECTION SYSTEM	1

GRAPHIC SCALE

0 1 2 3 4 5 6 7 8 FT

3/8" = 1'-0"

TITLE I

NO	DATE	REVISIONS	BY	CK	SAF	QA	PE	RE	KOH	DOE

U. S. DEPARTMENT OF ENERGY
NEVADA OPERATIONS OFFICE — LAS VEGAS, NEVADA

NEVADA NUCLEAR WASTE STORAGE INVESTIGATION
EXPLORATORY SHAFT FACILITY
BOOSTER PUMP STATION
LAYOUT

DESIGNED LB — DRAWN LB — CHECKED — SAFETY NA — QA RPS — PROJECT ENGINEER

SUBMITTED — HOLMES & NARVER, INC. — AGENCY APPROVAL — JOE ACCEPTANCE — DATE 12-15-88

HOLMES & NARVER, INC.
ARCHITECTS-ENGINEERS
ENERGY SUPPORT DIVISION
1050 E. FLAMINGO ROAD LAS VEGAS NEVADA 89109

L.D. NO. 500218 — W.B.S. NO. 1.2.6.2.2.2 — DRAWING NUMBER JS-025-ESF-C31 — SHEET 1 OF 1

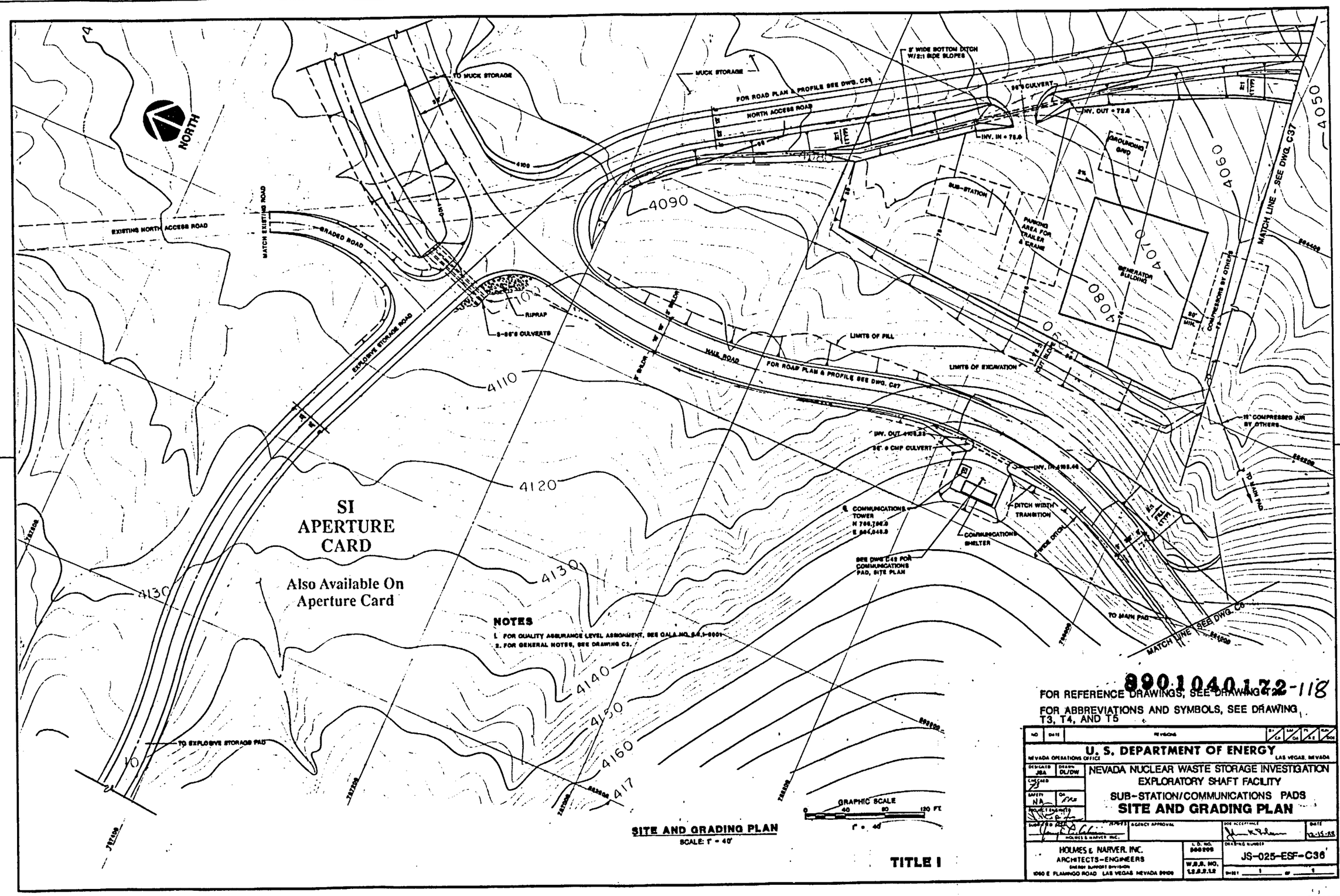

NOTES

1. FOR QUALITY ASSURANCE LEVEL ASSIGNMENT, SEE QALA NO. 8.2.1-8001
2. FOR GENERAL NOTES, SEE DRAWING C3.

NORTH

TO DETENTION POND

MUCK STORAGE AREA

MATCH LINE SEE DWG. C37

INTERSECTION STA 404+78.08

ROAD DIP

CONNECT 8" DRAIN LINE TO MINE WASTEWATER LINE

R=35' 6 CULVERTS INV.-OUT=39.08

R=85' (TYP)

NORTH ACCESS ROAD

NEW BURIED FUEL TANK FOR EMERGENCY GENERATORS

50'R

6 ACCESS ROAD

INV. IN = 48.57

INV. OUT = 48.77

50'R CULVERT

INV. IN = 40.89

5' BERM

LOWER PARKING

6 V-DITCH

MATCH LINE SEE DWG. C38

COMPRESSORS

TOP OF CUT SLOPE

TOE OF CUT SLOPE

TOE OF SLOPE TO MAIN PAD ABOVE

PEDESTRIAN STAIRWAY (TYPICAL)

SANITARY SEWER LIFT STATION GRINDER PUMP

15"AIR (BURIED) (BY OTHERS)

TO COMPRESSOR

CLEAN-OUT ON MWW LINE

6" FORCE MAIN

8" GRAVITY LINE

6" DRAIN PIPE

S.S. MANHOLE

DROP INLET

8" MWW 8" GRAVITY LINE

SHOP

ESF MAIN PAD

MATCH LINE SEE DWG. C8

9 MILE ROAD

MATCH LINE SEE DWG. C39

RC STA 1+43.00

RC STA 2+99.99

LOWER PARKING PG 4031.0

LOWER PARKING PG 4045.0

LOWER PARKING PG 4065.0

5' BERM (TYP)

END OF PAD CONSTRUCTION

OUT-V-DITCH

SITE AND GRADING PLAN
SCALE: 1"=40'

GRAPHIC SCALE
40 0 80 120 FT

TITLE I

4020 4030 4040 4050 4060 4070 4080 4090 4100 4110 4120 4130 4140 4150 4160 4170

NOTES
1. FOR QUALITY ASSURANCE LEVEL ASSIGNMENT, SEE DALA NO. 4.2.1-0901
2. FOR GENERAL NOTES, SEE DRAWING C1.

SI APERTURE CARD

Also Available On Aperture Card

8901040172-119

FOR REFERENCE DRAWINGS, SEE DRAWING T2.
FOR ABBREVIATIONS AND SYMBOLS, SEE DRAWING T3, T4, AND T5

NO	DATE	REVISIONS	BY	CH	SAC	QA	PE	KOM	DOE

U. S. DEPARTMENT OF ENERGY
NEVADA OPERATIONS OFFICE LAS VEGAS, NEVADA

DESIGNED RK/BA DRAWN CL/DW
CHECKED
DATE 7/79 QA
PROJECT ENGINEER

NEVADA NUCLEAR WASTE STORAGE INVESTIGATION
EXPLORATORY SHAFT FACILITY
LOWER PARKING
SITE AND GRADING PLAN

SUBMITTED BY HOLMES & NARVER INC. 7/79/79
AGENCY APPROVAL
DOE ACCEPTANCE DATE 12-05-89

HOLMES & NARVER, INC.
ARCHITECTS-ENGINEERS
ENERGY SUPPORT DIVISION
1050 E. FLAMINGO ROAD LAS VEGAS NEVADA 89109

L.D. SEQ. 500908
W.B.S. NO. 1.2.3.2.1.4
DRAWING NUMBER JS-025-ESF-C37
SHEET 1 OF 1

SI APERTURE CARD

Also Available On Aperture Card

NOTE:
100 YEAR FLOOD DEPTH IS D=1.8'

NOTE:
100 YEAR FLOOD DEPTH IS D=2.44'

CHANNEL EXCAVATION BORROW PIT (DRILL HOLE WASH)

MUCK STORAGE PAD WITH LINER

MATCH LINE SEE DWG C27

MATCH LINE SEE DWG C38

NORTH ACCESS ROAD

MUCK STORAGE ACCESS ROAD

8" DRAIN LINE

8" PERFORATED DRAIN LINE (TYP)

LIMITS OF TOE OF MUCK FILL (TYP)

NEW SHELDY TRANSITION

4060

4070

4080

4090

4050

+ 4058.2

NOTES

1. FOR QUALITY ASSURANCE LEVEL ASSIGNMENT, SEE QALA NO. 8.2.1-0001
2. FOR GENERAL NOTES, SEE DRAWING C3.

SITE & GRADING PLAN

SCALE: 1" = 40'

GRAPHIC SCALE 0 40 80 120 FT. 1" = 40'

TITLE I

FOR REFERENCE DRAWINGS, SEE DRAWING T2.
FOR ABBREVIATIONS AND SYMBOLS, SEE DRAWING T0, T4, AND T5

NO	DATE	REVISIONS	BY	CHK	PE	CHK

U. S. DEPARTMENT OF ENERGY
NEVADA OPERATIONS OFFICE LAS VEGAS, NEVADA

NEVADA NUCLEAR WASTE STORAGE INVESTIGATION
EXPLORATORY SHAFT FACILITY
MUCK STORAGE AND BORROW PIT
SITE & GRADING PLAN

DESIGNED RLL DRAWN DJW CHECKED JE SAFETY NA QA PROJECT ENGINEER

SUBMITTED BY HOLMES & NARVER INC. 11/7/86

AGENCY APPROVAL

DOE ACCEPTANCE 12-15-86

HOLMES & NARVER, INC.
ARCHITECTS-ENGINEERS
ENERGY SUPPORT DIVISION
1050 E. FLAMINGO ROAD LAS VEGAS NEVADA 89109

L.D. NO. 800298
W.B.S. NO.
L.S.S.I.S.
DRAWING NUMBER JS-025-ESF-C38
SHEET 1 OF 1

8901040172-120

SI APERTURE CARD

Also Available On Aperture Card

NOTES

1. FOR QUALITY ASSURANCE LEVEL ASSIGNMENT, SEE QALS NO. 6.2.1-0001
2. FOR GENERAL NOTES, SEE DRAWING C2.

NORTH

MATCH LINE SEE DWG. C38

MATCH LINE SEE DWG. C40

MATCH LINE SEE DWG. C37

CHANNEL EXCAVATION BORROW PIT (DRILL HOLE WASH)

MUCK STORAGE ACCESS ROAD

CONCRETE SPLASH PAD

DETENTION POND W/LINER PD-4038.0

INV.=4039.0

2-4' DRAIN PIPES

6" DRAIN PIPE

TOP SOIL STORAGE PAD

MUCK STORAGE PAD

6" PERFORATED DRAIN

TO 8" MWH PONDE MAIN

OPEN STORAGE AREA

WAREHOUSE BUILDING 6001 F.F. 3999.0

CONCRETE HEADWALL

INV IN 4001.8

INV. OUT 3999.8

STA. 401+78

2-36" ϕ CULVERTS

SITE & GRADING PLAN

SCALE 1"=40'

GRAPHIC SCALE

0 40 80 120 FT

1" = 40'

TITLE I

FOR REFERENCE DRAWINGS, SEE DRAWING T2.
FOR ABBREVIATIONS AND SYMBOLS, SEE DRAWING T3, T4, AND T5

8901040172-121

NO	DATE	REVISIONS	BY	CH	APP	APP

U. S. DEPARTMENT OF ENERGY
NEVADA OPERATIONS OFFICE LAS VEGAS, NEVADA

DESIGNED RL	DRAWN DLDOW
CHECKED	
SAFETY N/A	QA
PROJECT ENGINEER	

NEVADA NUCLEAR WASTE STORAGE INVESTIGATION
EXPLORATORY SHAFT FACILITY
TOP SOIL, BORROW PIT
SITE AND GRADING PLAN

SUBMITTED BY: Craig L. Gahr, HOLMES & NARVER INC. — AGENCY APPROVAL — USR ACCEPTANCE — DATE: 12-15-88

HOLMES & NARVER, INC.
ARCHITECTS-ENGINEERS
ENERGY SUPPORT DIVISION
1050 E. FLAMINGO ROAD LAS VEGAS NEVADA 89109

I.D. NO.	DRAWING NUMBER
880209	JS-025-ESF-C39
W.B.S. NO. 1.2.2.2.1.2	SHEET 1 OF 71

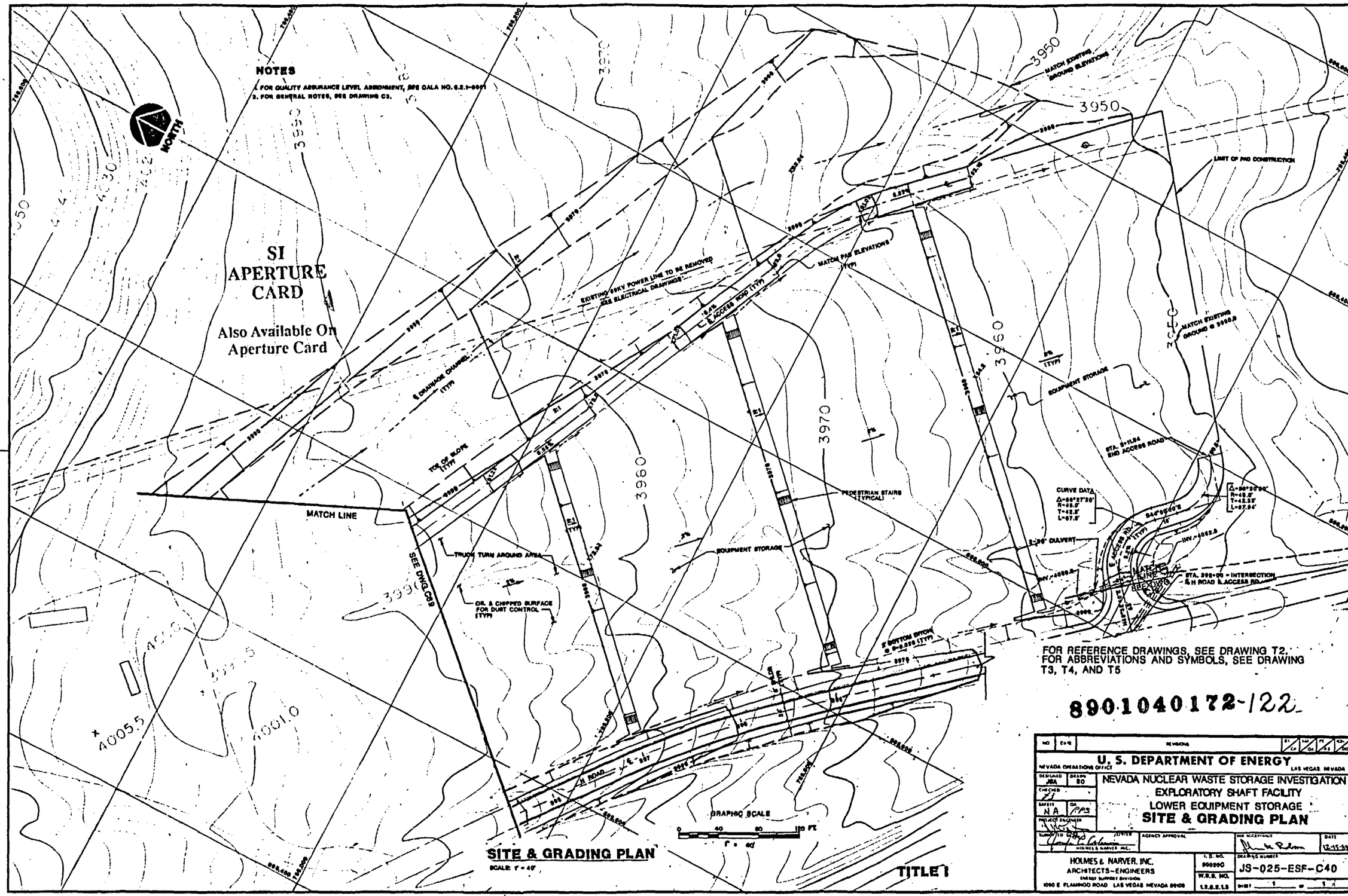
NOTES
1. FOR QUALITY ASSURANCE LEVEL ASSIGNMENT, SEE DALA NO. 6.2.1-0001
2. FOR GENERAL NOTES, SEE DRAWING C3.
NORTH
SI APERTURE CARD
Also Available On Aperture Card
MATCH LINE
SEE DWG. C69
TRUCK TURN AROUND AREA
OIL & CHIPPED SURFACE FOR DUST CONTROL (TYP)
EXISTING 69KV POWER LINE TO BE REMOVED SEE ELECTRICAL DRAWINGS
MATCH PAD ELEVATIONS (TYP)
MATCH EXISTING GROUND ELEVATIONS
LIMIT OF PAD CONSTRUCTION
EQUIPMENT STORAGE
PEDESTRIAN STAIRS (TYPICAL)
CURVE DATA
STA. 392+00 = INTERSECTION ℄ H ROAD & ACCESS RD.
GRAPHIC SCALE
SITE & GRADING PLAN
SCALE: 1" = 40'
TITLE I
FOR REFERENCE DRAWINGS, SEE DRAWING T2.
FOR ABBREVIATIONS AND SYMBOLS, SEE DRAWING T3, T4, AND T5
8901040172-122
U. S. DEPARTMENT OF ENERGY
NEVADA OPERATIONS OFFICE
LAS VEGAS, NEVADA
NEVADA NUCLEAR WASTE STORAGE INVESTIGATION
EXPLORATORY SHAFT FACILITY
LOWER EQUIPMENT STORAGE
SITE & GRADING PLAN
HOLMES & NARVER, INC.
ARCHITECTS-ENGINEERS
1050 E. FLAMINGO ROAD LAS VEGAS NEVADA 89109
JS-025-ESF-C40

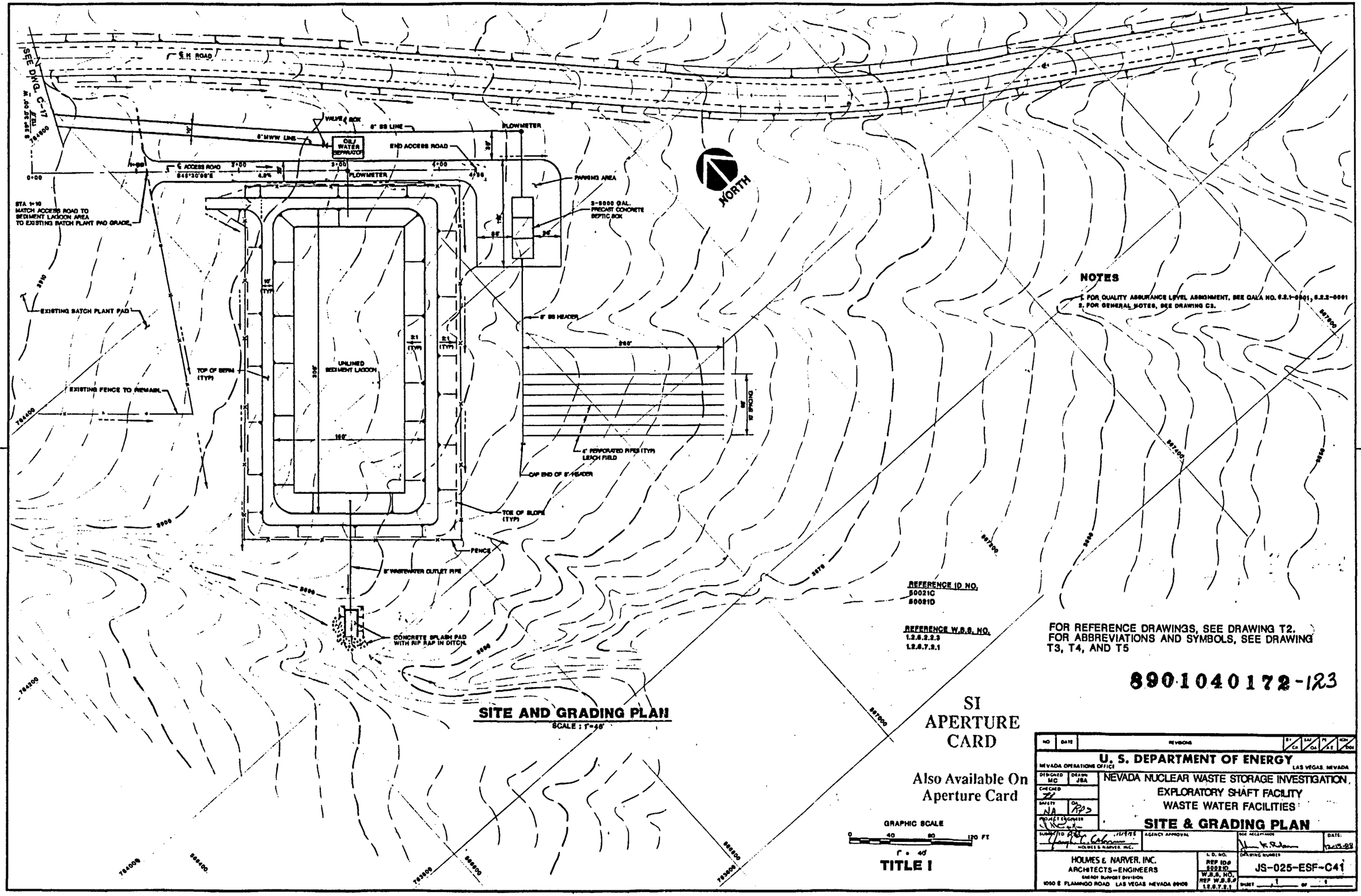

SITE AND GRADING PLAN

SCALE : 1"=40'

TITLE I

NOTES

1. FOR QUALITY ASSURANCE LEVEL ASSIGNMENT, SEE QALA NO. 6.2.1-0001, 6.2.2-0001
2. FOR GENERAL NOTES, SEE DRAWING C3.

REFERENCE ID NO.
50021C
50021D

REFERENCE W.B.S. NO.
1.2.6.2.2.3
1.2.6.7.2.1

FOR REFERENCE DRAWINGS, SEE DRAWING T2.
FOR ABBREVIATIONS AND SYMBOLS, SEE DRAWING T3, T4, AND T5

8901040172-123

SI APERTURE CARD

Also Available On Aperture Card

NO	DATE	REVISIONS	BY / CK	SAF / QA	PE / AE	KCH / DDE

U. S. DEPARTMENT OF ENERGY
NEVADA OPERATIONS OFFICE — LAS VEGAS, NEVADA

DESIGNED MC — DRAWN JSA
CHECKED
SAFETY NA — QA RPS
PROJECT ENGINEER
SUBMITTED — HOLMES & NARVER, INC.
AGENCY APPROVAL
SOE ACCEPTANCE — DATE: 12-15-88

NEVADA NUCLEAR WASTE STORAGE INVESTIGATION,
EXPLORATORY SHAFT FACILITY
WASTE WATER FACILITIES

SITE & GRADING PLAN

HOLMES & NARVER, INC.
ARCHITECTS-ENGINEERS
ENERGY SUPPORT DIVISION
1050 E. FLAMINGO ROAD LAS VEGAS NEVADA 89109

I. D. NO. REF ID# 50021D
W.B.S. NO. REF W.B.S.# 1.2.6.7.2.1

DRAWING NUMBER JS-025-ESF-C41

SHEET 1 OF 1

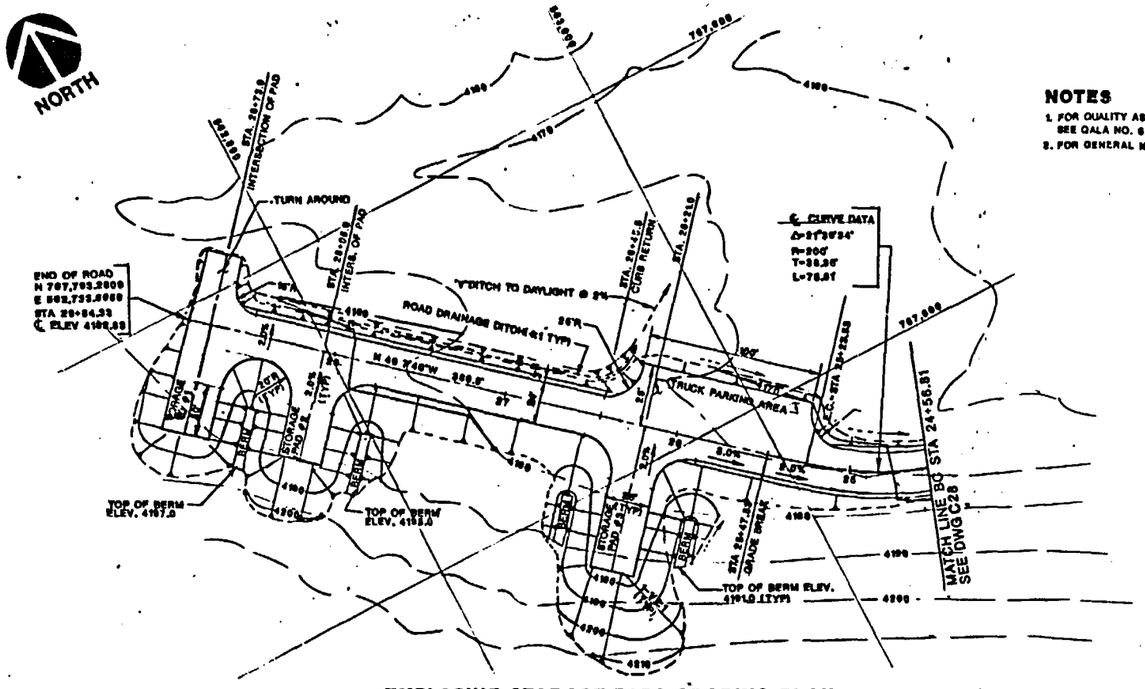

EXPLOSIVE STORAGE PADS GRADING PLAN
SCALE : 1"=40'

NOTES

1. FOR QUALITY ASSURANCE LEVEL ASSIGNMENT, SEE QALA NO. 6.2.1-0001
2. FOR GENERAL NOTES, SEE DRAWING C3.

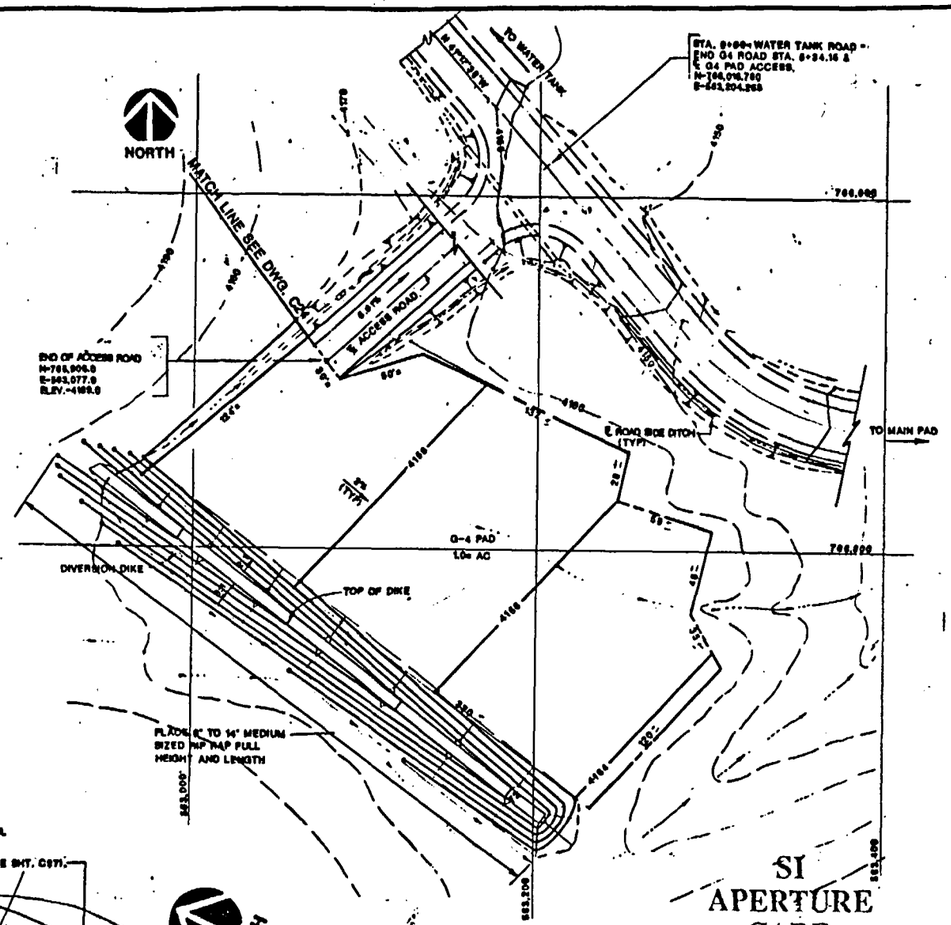

G4 PAD GRADING PLAN
SCALE : 1"=40'

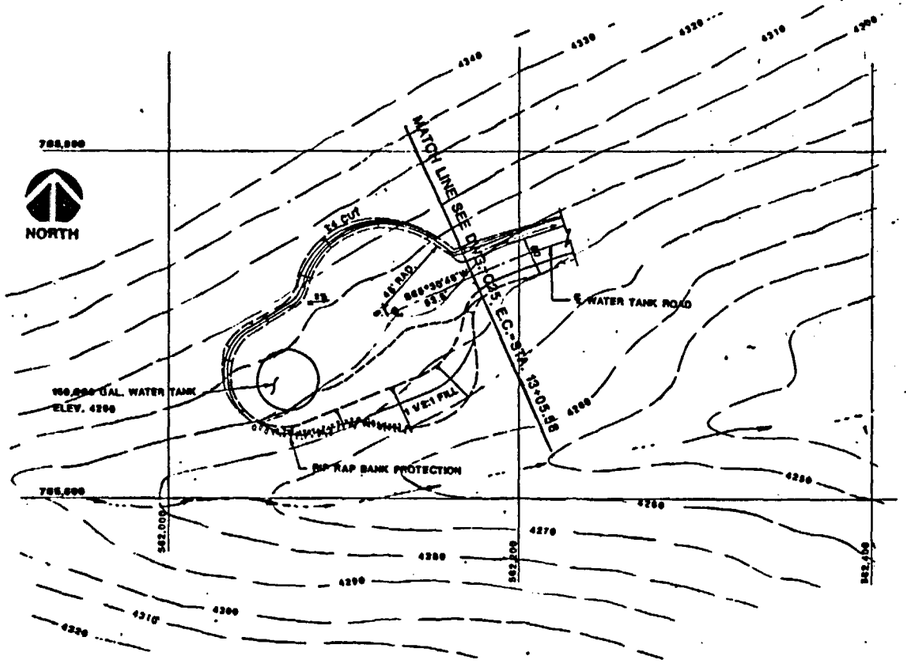

WATER TANK PAD GRADING
SCALE : 1"=40'

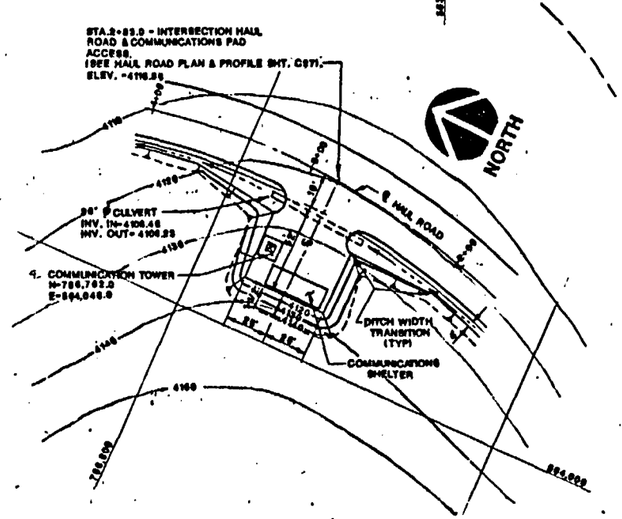

COMMUNICATION PAD SITE PLAN
SCALE 1" = 40'

GRAPHIC SCALE
0 40 80 120 FT
1" = 40'

TITLE I

SI APERTURE CARD

Also Available On Aperture Card

FOR REFERENCE DRAWINGS, SEE DRAWING T2.
FOR ABBREVIATIONS AND SYMBOLS, SEE DRAWING T3, T4, AND T5

8901040172-124

NO	DATE	REVISIONS	BY	CK	SAF	QA	PE	AE	ION	DOE

U. S. DEPARTMENT OF ENERGY
NEVADA OPERATIONS OFFICE — LAS VEGAS, NEVADA

DESIGNED LB — DRAWN JBA — CHECKED — SAFETY NA — QA — PROJECT ENGINEER

NEVADA NUCLEAR WASTE STORAGE INVESTIGATION
EXPLORATORY SHAFT FACILITY
EXPLOSIVE STORAGE, G-4, WATER TANK & COMMUNICATION PADS
SITE & GRADING PLANS

SUBMITTED — HOLMES & NARVER INC. — AGENCY APPROVAL — SOIL ACCEPTANCE — DATE 12-15-88

HOLMES & NARVER, INC.
ARCHITECTS-ENGINEERS
ENERGY SUPPORT DIVISION
1050 E. FLAMINGO ROAD LAS VEGAS NEVADA 89109

I. D. NO. 500208 — 1.2.6.21.2

DRAWING NUMBER JS-ESF-025-C42

SHEET 1 OF 2

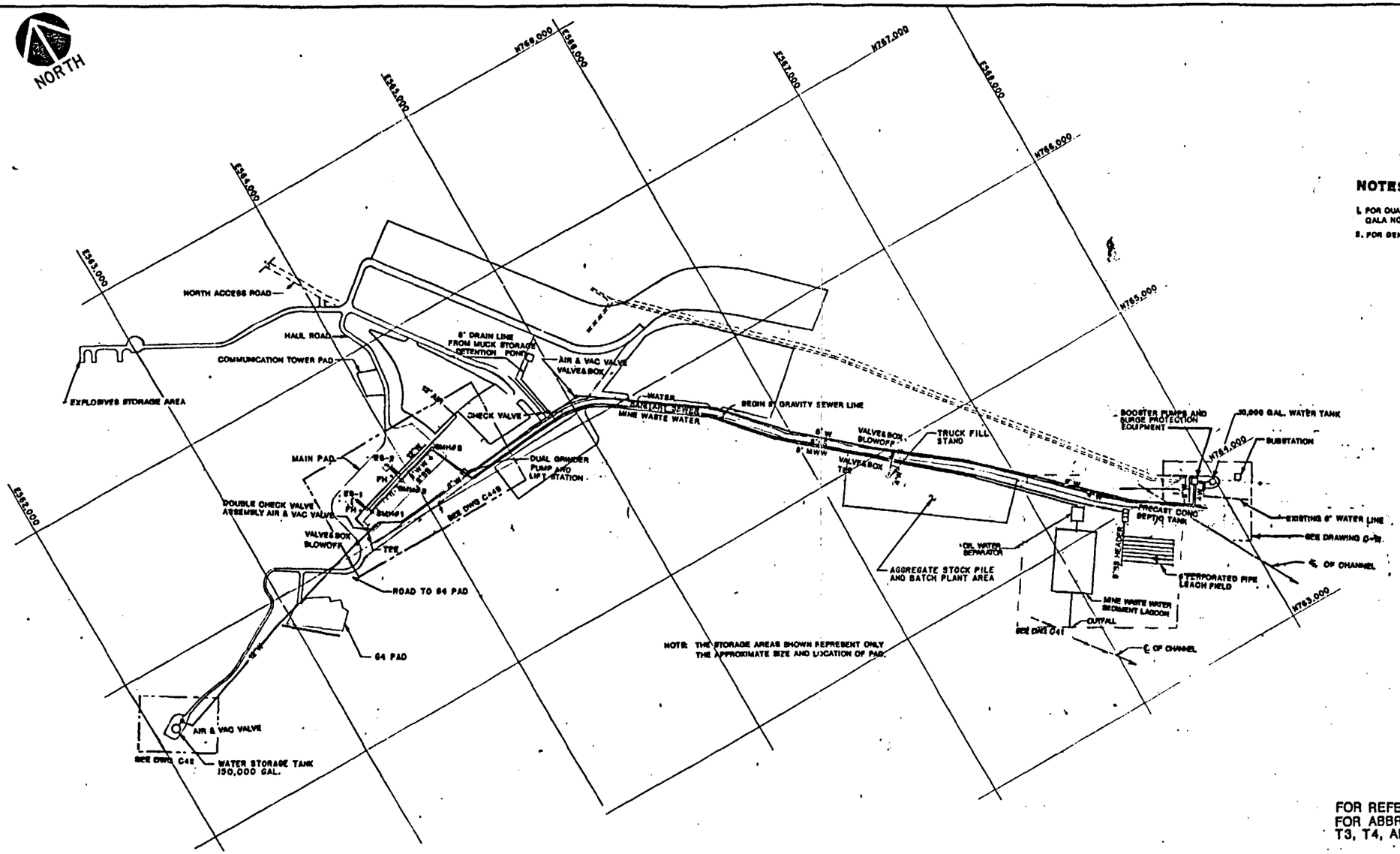

NOTES

1. FOR QUALITY ASSURANCE LEVEL ASSIGNMENT, SEE QALA NO. 0.2.2-0001 & QALA NO. 1.2.6-0001.
2. FOR GENERAL NOTES, SEE DRAWING C3.

SI APERTURE CARD

Also Available On Aperture Card

FOR REFERENCE DRAWINGS, SEE DRAWING T2.
FOR ABBREVIATIONS AND SYMBOLS, SEE DRAWING T3, T4, AND T5

8901040172-125

UTILITY PLAN

SCALE: 1" = 300'

GRAPHIC SCALE
0 300 600 900 FT.
1"=300'

TITLE I

NO.	DATE	REVISIONS

U.S. DEPARTMENT OF ENERGY
NEVADA OPERATIONS OFFICE — LAS VEGAS, NEVADA

NEVADA NUCLEAR WASTE STORAGE INVESTIGATION
EXPLORATORY SHAFT FACILITY
SYSTEM OVERALL
UTILITY PLAN

DESIGNED: LB — DRAWN: MC
CHECKED: [illegible]
SAFETY: NA — QA: [illegible]
PROJECT ENGINEER: [illegible]
SUBMITTED: [illegible] — ENGINEER
SHEET APPROVAL
BOE ACCEPTANCE: [illegible] — DATE: 12-15-88

HOLMES & NARVER, INC.
ARCHITECTS - ENGINEERS
ENERGY SUPPORT DIVISION
1050 E. FLAMINGO ROAD LAS VEGAS, NEVADA 89109

ID. NO. 500218
W.S.S. NO. 1.2.6.2.2.2
DRAWING NUMBER JS-025-ESF-C43
SHEET 1 OF 1

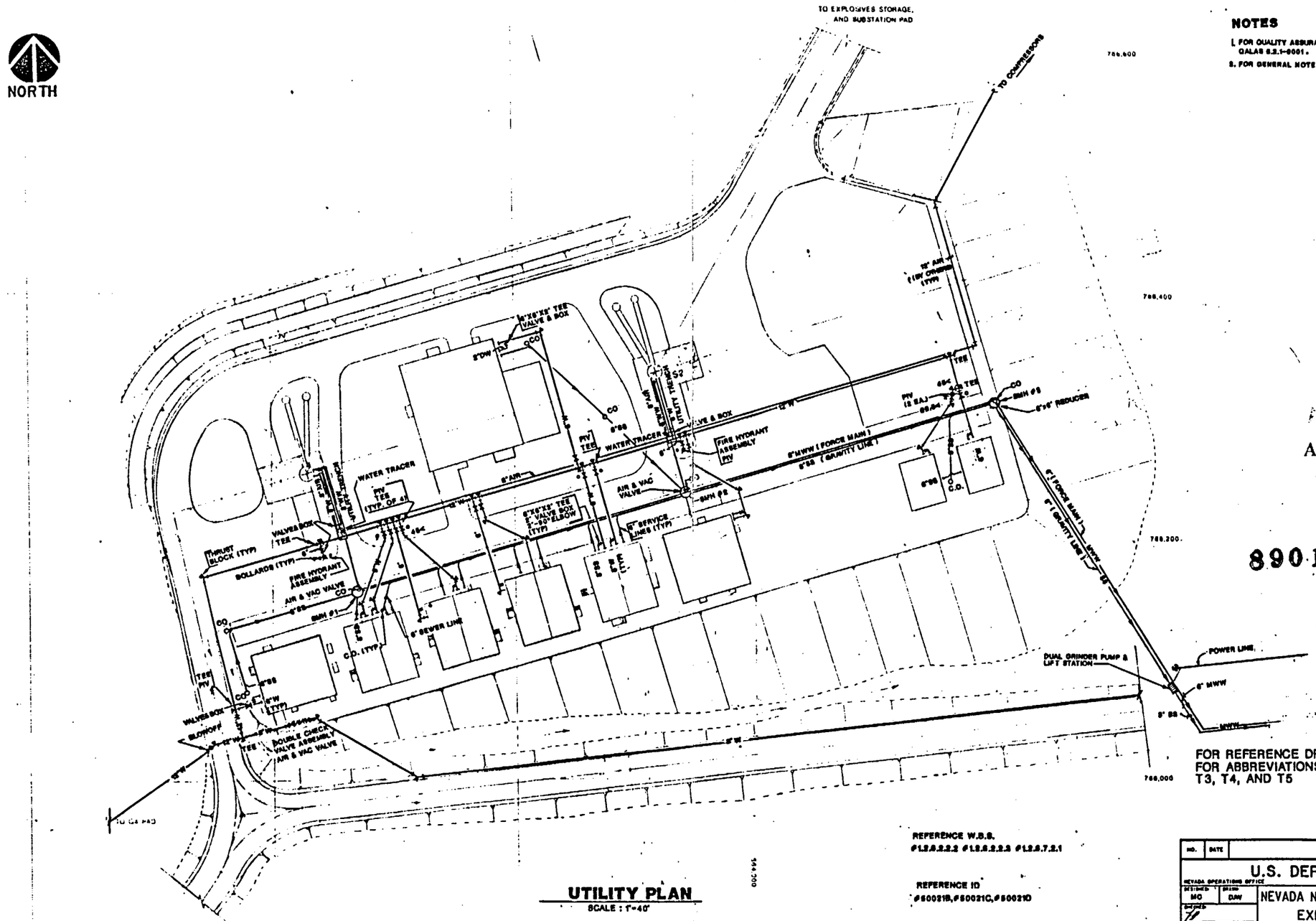

NOTES

1. FOR QUALITY ASSURANCE LEVEL ASSIGNMENT, SEE QALA NO. 8.2.2-0001 & QALAS 8.2.1-0001.
2. FOR GENERAL NOTES, SEE DRAWING C3.

SI APERTURE CARD

Also Available On Aperture Card

8901040172-126

FOR REFERENCE DRAWINGS, SEE DRAWING T2.
FOR ABBREVIATIONS AND SYMBOLS, SEE DRAWING T3, T4, AND T5

REFERENCE W.B.S.
#1.2.6.2.2.2 #1.2.6.2.2.3 #1.2.6.7.2.1

REFERENCE ID
#50021B,#50021C,#50021D

UTILITY PLAN
SCALE : 1"=40'

GRAPHIC SCALE
0 40 80 120 FT
1" = 40'

TITLE I

NO.	DATE	REVISIONS

U.S. DEPARTMENT OF ENERGY
NEVADA OPERATIONS OFFICE — LAS VEGAS, NEVADA

NEVADA NUCLEAR WASTE STORAGE INVESTIGATION
EXPLORATORY SHAFT FACILITY
SYSTEM MAIN PAD
UTILITY PLAN

DESIGNED: MC — DRAWN: DJW
SAFETY: NA — QA: PRS
PROJECT ENGINEER:
SUBMITTED: — AGENCY APPROVAL: — DOE ACCEPTANCE: — DATE: 12-15-89

HOLMES & NARVER, INC.
ARCHITECTS - ENGINEERS
ENERGY SUPPORT DIVISION
1050 E. FLAMINGO ROAD LAS VEGAS, NEVADA 89109

ID. NO. REF. ID — W.B.S. NO. REF. W.B.S.

DRAWING NUMBER: JS-025-ESF-C44

SHEET 1 OF 1

DRAINAGE AREA - A

DRAINAGE AREA - B

DRAINAGE AREA - C

DRAINAGE AREA - D

ESF - 1

ESF - 2

G-4 PAD

NORTH

LEGEND

DRAINAGE BASIN BOUNDARIES

* P.M.F. FLOOD BOUNDARIES

100 YR. FLOOD BOUNDARIES

EXISTING CONTOURS

* P.M.F. - PROBABLE MAXIMUM FLOOD

SI APERTURE CARD

Also Available On Aperture Card

FOR REFERENCE DRAWINGS, SEE DRAWING T2.
FOR ABBREVIATIONS AND SYMBOLS, SEE DRAWING T3, T4, AND T5

EXISTING CONDITIONS

SCALE 1"=100'

GRAPHIC SCALE

NO.	DATE	REVISIONS	BY	CH	SAP	PC	ADM

U.S. DEPARTMENT OF ENERGY
NEVADA OPERATIONS OFFICE — LAS VEGAS, NEVADA

NEVADA NUCLEAR WASTE STORAGE INVESTIGATION
EXPLORATORY SHAFT FACILITY
PMF AND 100 YEAR FLOOD PLAINS
EXISTING CONDITIONS

DESIGNED MC | DRAWN RLL | CHECKED ZI | DATE NA | PROJECT ENGINEER

DESIGN AGENCY APPROVAL | PROJECT ENGINEER | DATE 12-15-93

HOLMES & NARVER, INC.
ARCHITECTS - ENGINEERS
ENERGY SUPPORT DIVISION
1050 E. FLAMINGO ROAD LAS VEGAS, NEVADA 89109

H&N JOB NO. 60026D | DRAWING NUMBER JS-025-ESF-C45 | U.S.E. NO. L2.2.2.L4 | SHEET 1 OF 1

8901040172-127

NORTH

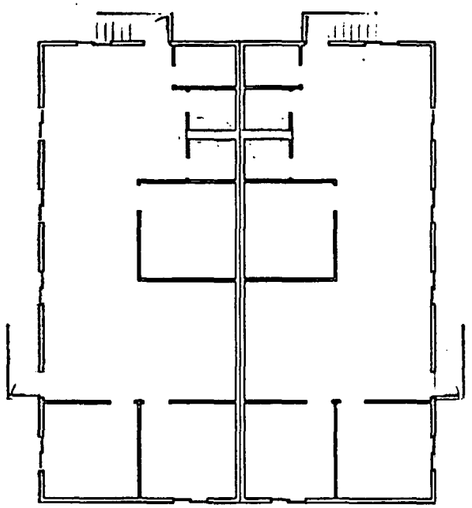

(2) OFFICE TRL. TYPE A (REVERSED)

(3) OFFICE TRL. TYPE A

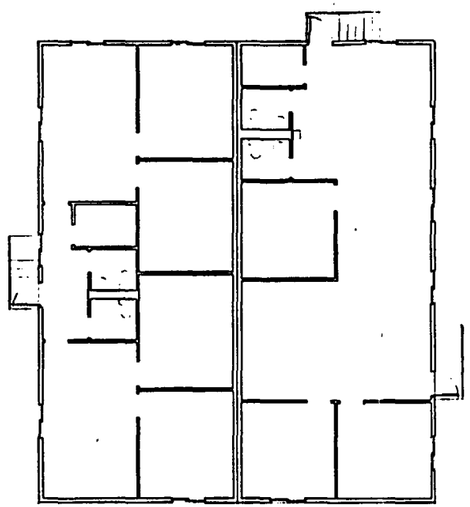

(4) OFFICE TRL. TYPE B

(5) OFFICE TRL. TYPE A

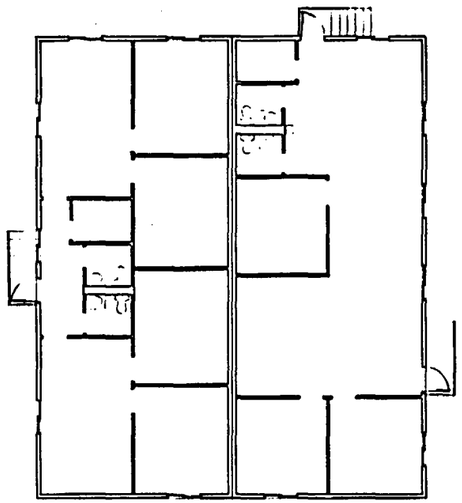

(6) OFFICE TRL. TYPE B

(7) OFFICE TRL. TYPE A

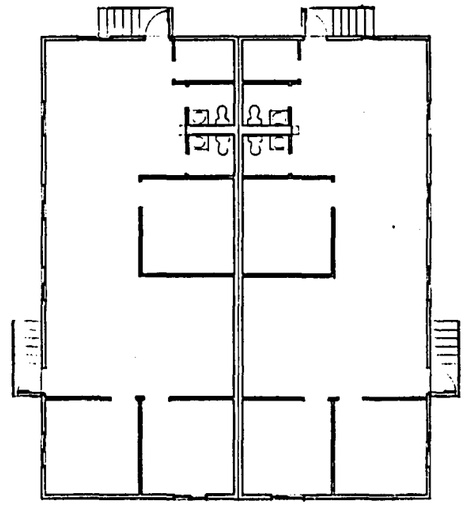

(19) OFFICE TRL. TYPE A (REVERSED)

(20) OFFICE TRL. TYPE A

TRAILER COMPLEX PLAN

SCALE: 1/8"=1'-0"

GENERAL NOTES

1. THIS TITLE I DRAWING DEPICTS ONLY THE MAJOR DESIGN FEATURES OF THIS PROJECT. ALL DETAILS, EQUIPMENT DESCRIPTIONS, AND SPECIAL INSTRUCTIONS SHALL BE DEVELOPED DURING THE TITLE II EFFORT.
2. BATT INSULATION SHALL BE VINYL FACED FIBERGLASS BLANKETS WITH A MINIMUM THERMAL RATING OF R-19. ALL JOINTS SHALL BE SEALED WITH 6" WIDE TAPE TO PROVIDE A CONTINUOUS VAPOR BARRIER. INSULATION SHALL MEET THE FIRE RATINGS DESCRIBED IN THE CONSTRUCTION SPECIFICATIONS.
3. FABRICATION AND ERECTION OF STRUCTURAL STEEL FRAMING MEMBERS SHALL CONFORM TO THE LATEST EDITION OF THE AISC SPECIFICATIONS. ALL WELDING TO STRUCTURAL STEEL SHALL CONFORM TO THE AWS STRUCTURAL WELDING CODE D1.1.81 AND BE PERFORMED BY CERTIFIED WELDERS. DESIGN LOADS SHALL CONFORM TO THE MINIMUM REQUIREMENTS OF THE LATEST EDITION OF THE U.B.C. WITH THE FOLLOWING:

   WIND LOAD ——— 20 PSF
   ROOF LOAD ——— 20 PSF
   SEISMIC ZONE ——— 3
   MINIMUM WIND UPLIFT RATING — CLASS 60
   IMPORTANCE FACTOR ——— 1

4. INTERIOR DOORS SHALL BE HOLLOW METAL CORE, COMPLETE WITH FRAMES, MOUNTING HARDWARE, LOCKS AND LOCKSETS, AND THRESHOLDS AS REQUIRED.
5. EXTERIOR DOORS SHALL BE HOLLOW METAL INSULATED CORE, COMPLETE WITH FRAMES, MOUNTING HARDWARE, LOCKS AND LOCKSETS, THRESHOLDS, AND FULL WEATHERSTRIPPING.
6. WINDOWS SHALL BE ALUMINUM FRAME SLIDERS WITH DOUBLE PANE INSULATED GLASS.
7. UNLESS NOTED OTHERWISE ALL INTERIOR WALLS SHALL BE METAL STUDS WITH 5/8" GYP. BD. TAPED AND FINISHED AND PAINTED. WATER RESISTANT GYP. BD. SHALL BE USED FOR ALL WALLS IN TOILETS AS REQUIRED BY THE U.B.C. TOILETS, FIRE RISER ROOMS, AND FOYERS SHALL HAVE VINYL FLOORING AND OFFICES SHALL HAVE CARPETING AS DESCRIBED IN THE CONSTRUCTION SPECIFICATIONS. ALL WALLS SHALL HAVE 4" VINYL BASE.
8. THE BUILDING MANUFACTURER SHALL FURNISH ALL STRUCTURAL CALCULATIONS AND SHOP DRAWINGS FOR THE ERECTION, INSTALLATION AND SET-UP AS REQUIRED FOR A COMPLETE AND USEABLE BUILDING.BLDG. MFR. SHALL DELIVER ALL BUILDINGS TO THE JOB SITE COMPLETE WITH ALL COMPONENTS REQUIRED FOR SET-UP. SET-UP AND UTILITY CONNECTIONS WILL BE BY OTHERS.
9. SEE REFERENCE DRAWING JS-025-ESF-C4 FOR TRAILER OCCUPANCY.
10. EACH OFFICE TRAILER WILL ACCOMODATE EIGHT (8) PEOPLE BASED ON APPROX. 100 SQ. FT. NET EACH.
11. NUMBERS BELOW PLANS INDICATED BY ◯ REFER TO BUILDING NUMBERS SHOWN ON DWG. NO. C4 LEGEND.
12. FOR QUALITY LEVEL REFER TO ESF QUALITY ASSURANCE LEVEL ASSIGNMENT SHEET, QALAS NO. 6.3.1-0001
13. FOR ABBREVIATIONS AND SYMBOLS SEE DWG. JS-025-ESF-T3, T4 AND T5

GRAPHIC SCALE
0 5 10 15 20 25FT.
1/8"=1'-0"

TITLE I

FOR REFERENCE DRAWINGS, SEE DRAWING T2

SI APERTURE CARD

Also Available On Aperture Card

8901040172-128

NO	DATE	REVISIONS	BY	CH	PE	PM

U. S. DEPARTMENT OF ENERGY
NEVADA OPERATIONS OFFICE — LAS VEGAS, NEVADA

DESIGNED DRAWN CHECKED SAFETY QA PROJECT ENGINEER

NEVADA NUCLEAR WASTE STORAGE INVESTIGATION
EXPLORATORY SHAFT FACILITY
TRAILER COMPLEX

PLAN AND GENERAL NOTES

SUBMITTED FOR C. Cabo 10/1/85 HOLMES & NARVER, INC.
AGENCY APPROVAL
DOE ACCEPTANCE DATE 12-15-86

HOLMES & NARVER, INC.
ARCHITECTS-ENGINEERS
ENERGY SUPPORT DIVISION
1050 E. FLAMINGO ROAD LAS VEGAS NEVADA 89109

L.D. NO. 800259
W.B.S. NO. 1.2.3.1.10

DRAWING NUMBER JS-025-ESF-A1
SHEET 1 OF 1

H G F E D C B A

12 11 10 9 8 7 6 5 4 3 2 1

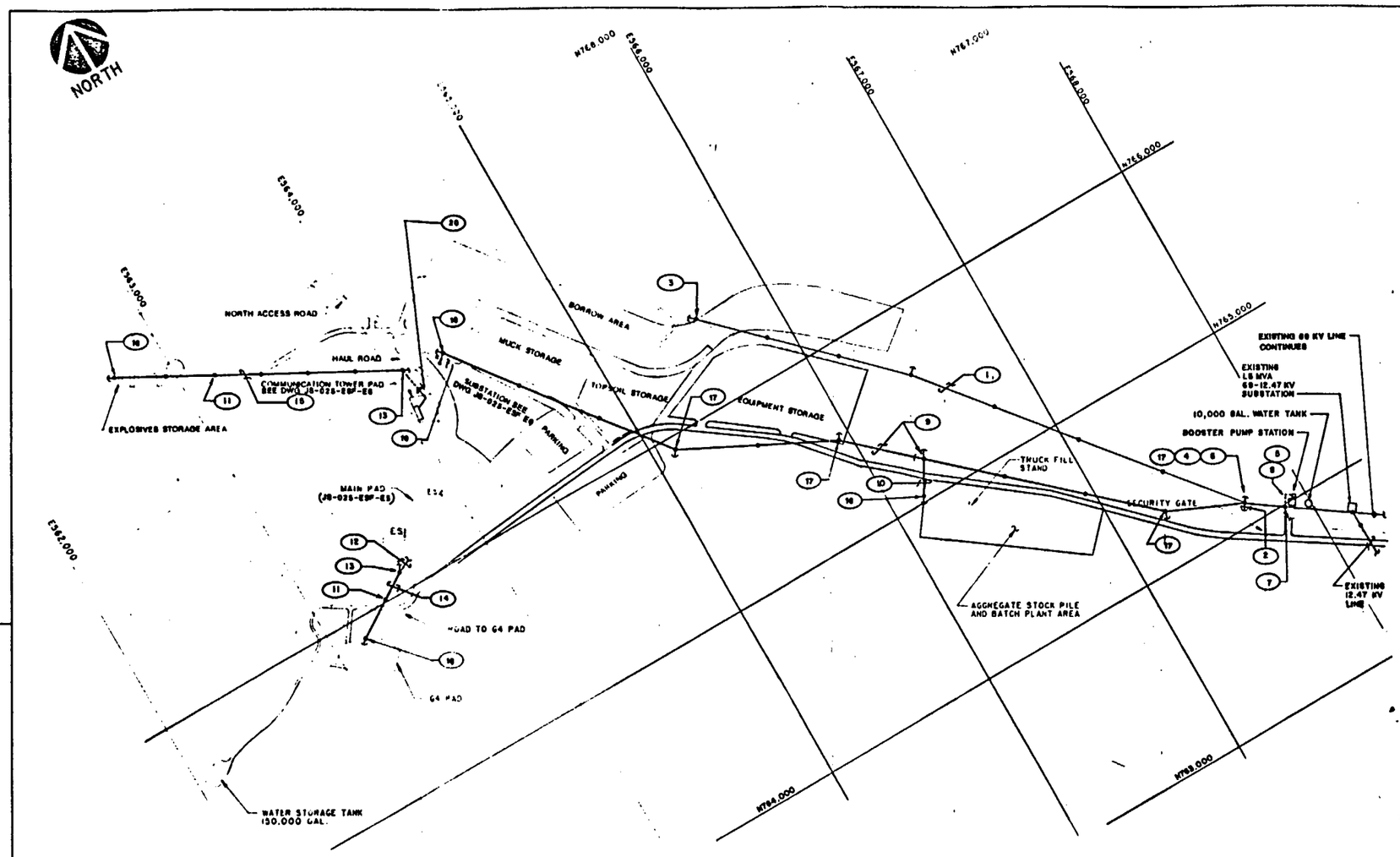

GENERAL NOTES

1. THIS TITLE I DRAWING DEPICTS ONLY THE MAJOR DESIGN FEATURES OF THIS PROJECT. ALL DETAILS, EQUIPMENT DESCRIPTIONS AND SPECIAL INSTRUCTIONS SHALL BE DEVELOPED DURING THE TITLE II EFFORT.
2. ALL EQUIPMENT SHALL BE U.L. LISTED.
3. ALL WORK, EQUIPMENT AND MATERIAL SHALL BE IN ACCORDANCE WITH THE LATEST EDITION OF THE NATIONAL ELECTRICAL CODE, NATIONAL ELECTRICAL SAFETY CODE, ANSI C2 AND THE PROJECT CONSTRUCTION SPECIFICATIONS.
4. NOT USED.
5. FOR ABBREVIATIONS AND SYMBOLS SEE DWG. JS-025-ESF-T4.

KEYED NOTES

(1) REMOVE THE EXISTING 69 KV, 3Ø 4/0 ACSR AND 3/8" E.H.S. STATIC LINE, 3Ø 4/0 ACSR 12.47 KV LINE UNDERBUILT AND POLES FROM POLE # EW 61 TO POLE # EW 64 EXCEPT FOR POLE # EW 64, WHICH IS TO REMAIN.

(2) REMOVE THE EXISTING GUY WIRE.

(3) EXISTING POLE #EW61.

(4) EXISTING POLE #EW 64.

(5) SEE DWG. JS-025-0004-E1 FOR CONTINUATION.

(6) INSTALL NEW GUY WIRE.

(7) INSTALL NEW INLINE 75' CLASS 2 POLE, FOR 12.47 KV POWER TO BOOSTER PUMP STATION BLDG.

(8) INSTALL 4 # 2, 12.47KV SHIELDED UNDERGROUND CABLE IN CONDUIT TO BOOSTER PUMP STATION BUILDING.

(9) INSTALL 3 #4/0 ACSR & 3/8" E.H.S. STATIC, 69KV LINE AND 75' CLASS 2 POLE FROM THE EXISTING POLE #EW 64 TO THE NEW SUBSTATION PAD. SEE DWG E6 FOR CONTINUATION INTO SUBSTATION. SEE STD # 80801 OF THE DOE/NV OVERHEAD POWER LINE STANDARDS.

(10) INSTALL 4 #4/0 ACSR, 12.47KV LINE FROM THE EXISTING POLE #EW 64 TO POLE AT THE BATCH PLANT AREA. SEE STD #80101 OF THE DOE/NV OVERHEAD POWER LINE STANDARDS.

(11) INSTALL 45' CLASS 2 POLE TYPICAL FOR 4.16KV LINE.

(12) NEW 4.16KV UNDERGROUND SERVICE TO NEW DEADEND POLE WITH RISER. SEE DWG. E6 FOR CONTINUATION.

(13) NEW 4.16KV DEADEND POLE WITH RISER. SEE STD. #80110 OF THE DOE/NV OVERHEAD POWER LINE STANDARDS.

(14) INSTALL 4#2 ACSR, 4.16KV DISTRIBUTION LINE FROM THE DEADEND POLE WITH RISER TO THE USW-G4 PAD DEADEND POLE. SEE STD #80101 OF THE DOE/NV OVERHEAD POWER LINE STANDARDS.

(15) INSTALL 4#2 ACSR, 4.16KV DISTRIBUTION LINE FROM THE DEADEND POLE WITH RISER TO EXPLOSIVE STORAGE AREA. SEE STD #80101 OF THE DOE/NV OVERHEAD POWER LINE STANDARDS.

(16) NEW HORIZONTAL DEADEND POLE. SEE STD # 80104 OF THE DOE/NV OVERHEAD POWER LINE STANDARDS.

(17) SEE STD # 80803 OF THE DOE/NV OVERHEAD POWER LINE STANDARDS FOR THE INSTALLATION OF 69 KV MEDIUM ANGLE STRUCTURE.

(18) SEE STD # 80804 OF THE DOE/NV OVERHEAD POWER LINE STANDARDS FOR THE INSTALLATION OF THE VERTICAL DEAD-END STRUCTURE.

(19) 69 KV SLACK SPAN CONSTRUCTION SIMILAR TO STD # 80801 OF THE DOE/NV OVERHEAD POWER LINE STANDARDS, BUT WITHOUT THE GUY WIRES.

(20) INSTALL 4 # 2, 4.16 KV SHIELDED UNDERGROUND CABLE IN CONDUIT, FROM COMMUNICATION PAD TO UTILITY POLE FOR CONTINUATION TO EXPLOSIVE STORAGE AREA.

NOTES

1. FOR QUALITY LEVEL REFER TO ESF QUALITY ASSURANCE LEVEL ASSIGNMENT SHEET, GALAS NO. 0.2.2-0002, 0.2.2-0003.

SI APERTURE CARD

Also Available On Aperture Card

FOR REFERENCE DRAWINGS, SEE DRAWING T2

8901040172-129

ESF ELECTRICAL SITE PLAN
SCALE: 1" = 300'

GRAPHIC SCALE
0 300 600 900 FT.
1"=300'

TITLE I

U.S. DEPARTMENT OF ENERGY
NEVADA NUCLEAR WASTE STORAGE INVESTIGATION
EXPLORATORY SHAFT FACILITY
ESF ELECTRICAL SITE PLAN

J.D.	R.F.C.	
NA		12-15-88

HOLMES & NARVER, INC.
ARCHITECTS - ENGINEERS
ENERGY SUPPORT DIVISION
LAS VEGAS, NEVADA

90021 A
I.2.6.2.2.1
JS-025-ESF-E1

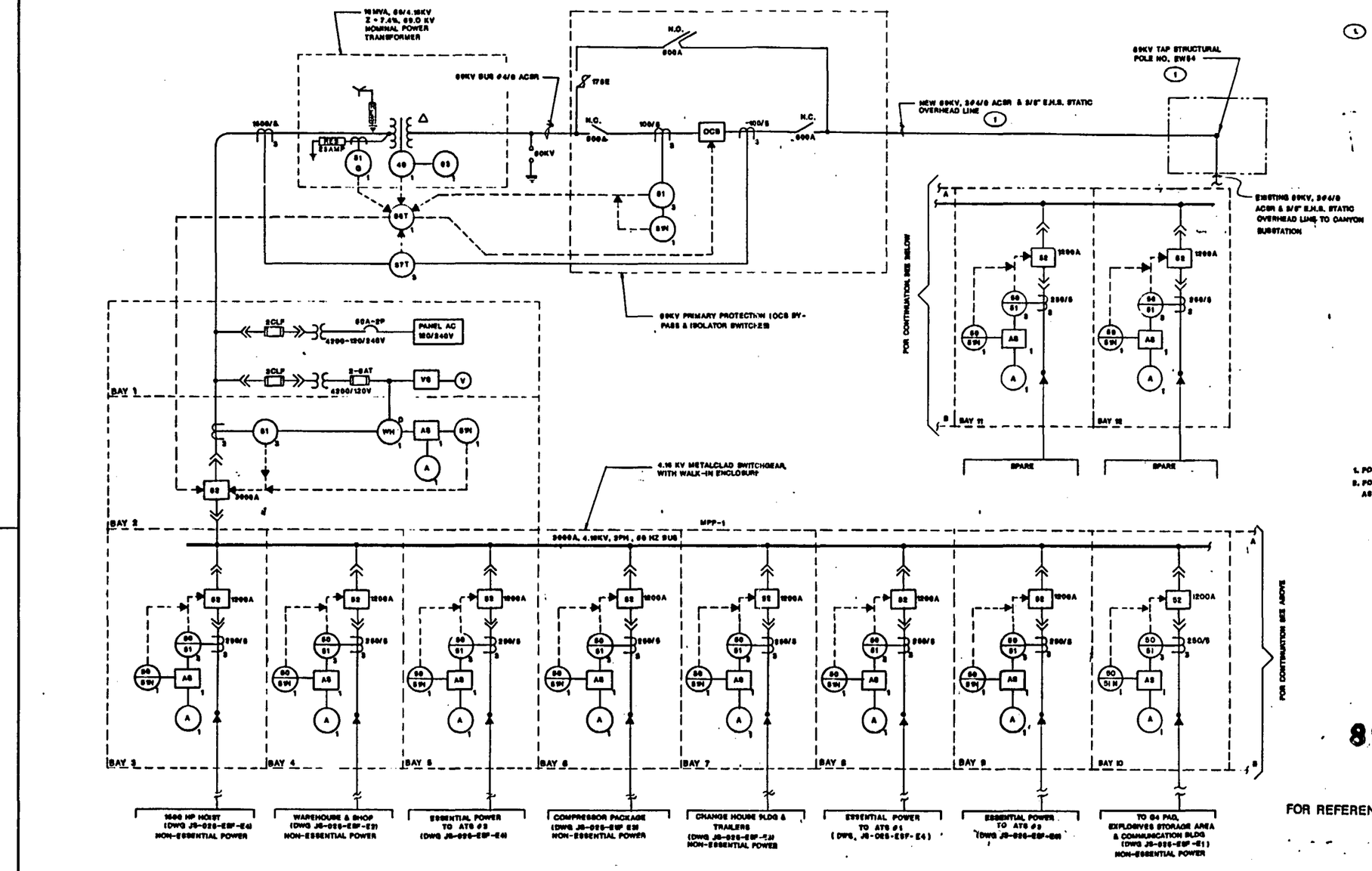

MAIN SWITCHGEAR ONE LINE DIAGRAM

KEYED NOTES

1. SEE DWG JS-025-ESF-E1

NOTES

1. FOR GENERAL NOTES, SEE DRAWING JS-025-ESF-E1.
2. FOR QUALITY LEVEL REFER TO ESF QUALITY ASSURANCE LEVEL ASSIGNMENT SHEET QALAS NO. 6.2.2-0002 & 6.2.2-0003.

SI
APERTURE
CARD

Also Available On
Aperture Card

8901040172-130

FOR REFERENCE DRAWINGS, SEE DRAWING T2

TITLE I

NO	DATE	REVISIONS	BY	CK	SAF	QA	PE	AE	RCH	DOE

U. S. DEPARTMENT OF ENERGY
NEVADA OPERATIONS OFFICE — LAS VEGAS, NEVADA

DESIGNED JD — DRAWN M.S.F.
CHECKED
SAFETY NA — QA RPS
PROJECT ENGINEER
SUBMITTED — HOLMES & NARVER, INC. — 12/19/88
AGENCY APPROVAL
DOE ACCEPTANCE — DATE 12-15-88

NEVADA NUCLEAR WASTE STORAGE INVESTIGATION
EXPLORATORY SHAFT FACILITY

MAIN SWGR-ONE LINE DIAGRAM

HOLMES & NARVER, INC.
ARCHITECTS-ENGINEERS
ENERGY SUPPORT DIVISION
1050 E. FLAMINGO ROAD LAS VEGAS NEVADA 89109

L.D. NO. 50021A
W.B.S. NO. 1.2.6.2.2.1
DRAWING NUMBER JS-025-ESF-E2
SHEET 1 OF 1

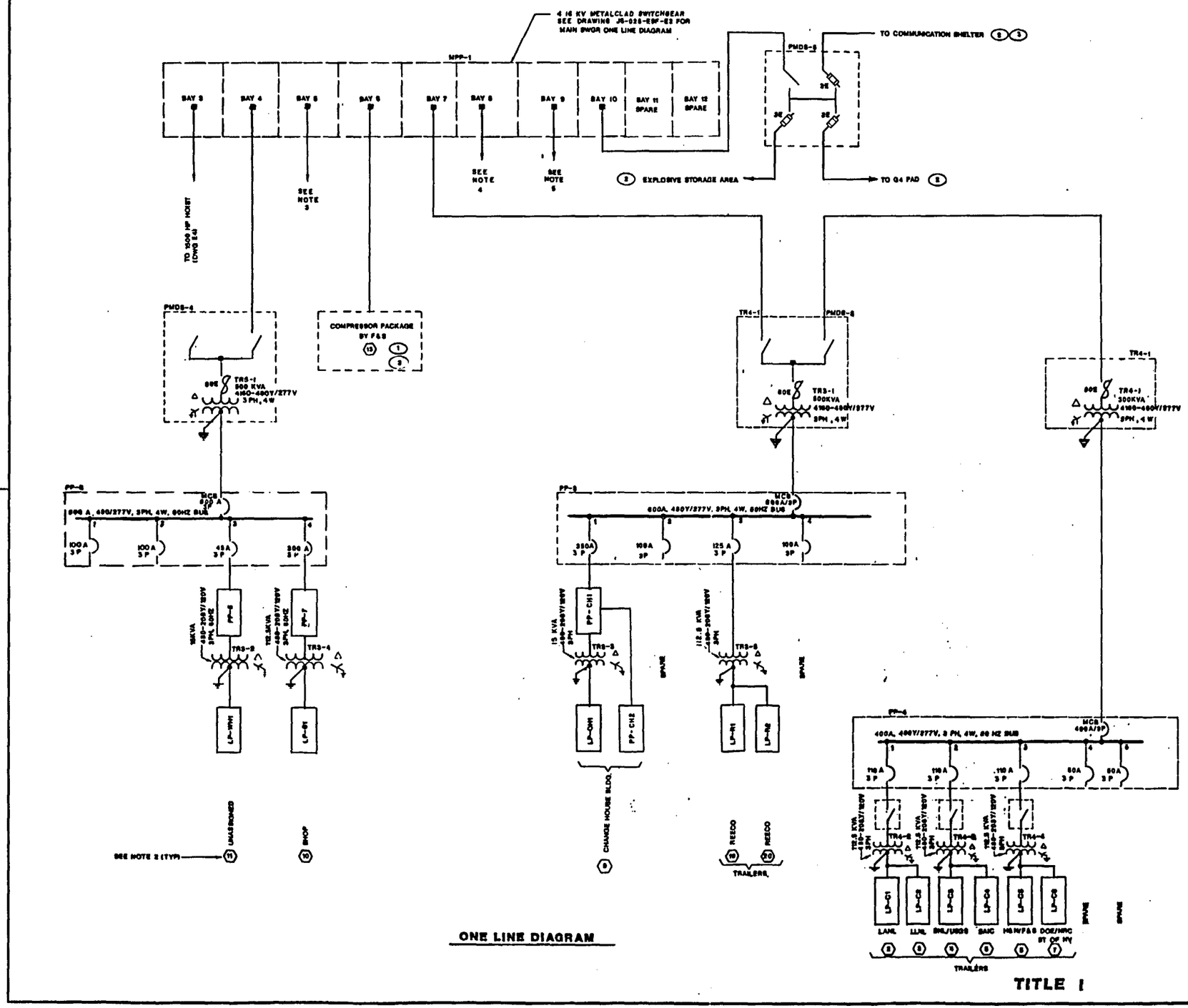

ONE LINE DIAGRAM

TITLE I

KEYED NOTES

1. COMPRESSOR PACKAGE BY F & S CONSIST OF 6-392 HP, 4160V, 3PH MAIN COMPRESSORS WITH 2 BACKUPS, 6-16HP, 480V, 3PH OIL COOLERS WITH 2 BACKUPS AND 6-1.5HP, 480V, 3PH AFTER COOLER UNITS WITH 2 BACKUPS, ALSO PROTECTIVE DEVICES AND SWITCHES.
2. SEE DWG JS-025-ESF-E1.
3. SEE DWG JS-025-ESF-E6.

NOTES

1. FOR GENERAL NOTES, SEE DRAWING JS-025-ESF-E1
2. NUMBER IN HEXAGON (3) IDENTIFIES ITEM AS SHOWN IN LEGEND ON DRAWING JS-025-ESF-E6.
3. TO AUTOMATIC TRANSFER SWITCH ATS-2 FOR SWITCHGEAR MPP-2. SEE DRAWING JS-025-ESF-E4.
4. TO AUTOMATIC TRANSFER SWITCH ATS-1 FOR SWITCHGEAR MPP-3. SEE DRAWING JS-025-ESF-E4.
5. TO AUTOMATIC TRANSFER SWITCH ATS-3 FOR SWITCHGEAR MPP-4. SEE DRAWING JS-025-ESF-E4.
6. FOR QUALITY LEVEL REFER TO ESF QUALITY ASSURANCE LEVEL ASSIGNMENT SHEET QALAS NO. 0.2.2-0003,0.2.2-0003 & 0.3.1-0001.

SI
APERTURE
CARD

Also Available On
Aperture Card

FOR REFERENCE DRAWINGS, SEE DRAWING T2

8901040172-131

NO	DATE	REVISIONS	BY	CK	CH	PE	ACK

U. S. DEPARTMENT OF ENERGY
NEVADA OPERATIONS OFFICE — LAS VEGAS NEVADA

DESIGNED JD — DRAWN M.S.F.
CHECKED
SAFETY NH — QA RPS
PROJECT ENGINEER

NEVADA NUCLEAR WASTE STORAGE INVESTIGATION
EXPLORATORY SHAFT FACILITY
NON-ESSENTIAL POWER
ONE LINE DIAGRAM

SUBMITTED — HOLMES & NARVER INC. — AGENCY APPROVAL — DOE ACCEPTANCE — DATE 12-15-81

HOLMES & NARVER, INC.
ARCHITECTS-ENGINEERS
ENERGY SUPPORT DIVISION
1050 E. FLAMINGO ROAD LAS VEGAS NEVADA 89109

I.D. NO. 80021A — W.B.S. NO. 1.2.0.2.2.1

DRAWING NUMBER JS-025-ESF-E3

SHEET 1 OF 1

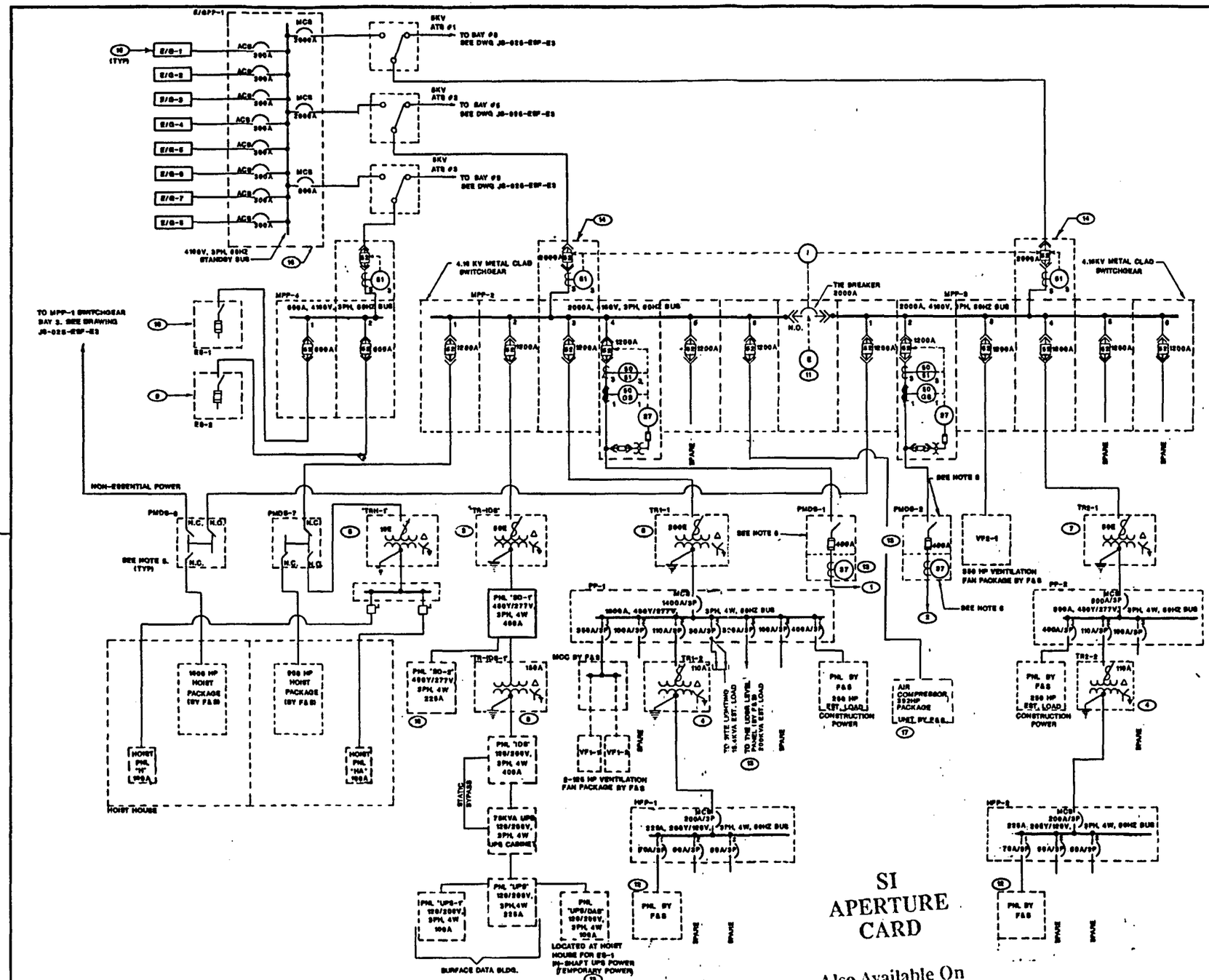

KEYED NOTES:

1. ES-1 SHAFT POWER 4160V, 3PH, 60HZ (BY F&S)
2. ES-2 SHAFT POWER 4160V, 3PH, 60HZ (BY F&S)
3. 500KVA, 4160-480Y/277V, 3PH, 4W, 60HZ TRANSFORMER
4. 112.5KVA, 480Y/277V, 3PH, 4W, 60HZ TRANSFORMER
5. 45 KVA, 4160-208Y/120V, 3PH, 4W, 60HZ TRANSFORMER
6. 1500KVA, 4160-480Y/277V, 3PH, 4W, 60HZ TRANSFORMER
7. 500 KVA, 4160-480Y/277V, 3PH, 4W, 60HZ TRANSFORMER
8. 112.5KVA, 480-208Y/120V, 3PH, 4W, 60HZ TRANSFORMER
9. FUSED 5KV, 400AMP DISCONNECT SWITCH FOR F&S PORTABLE 1000KW, 4160V, 3PH ELECTRIC HEATER FOR ES-2. ACTUAL SIZE TO BE DETERMINED IN TITLE II EFFORTS.
10. SAME AS NOTE (9) EXCEPT 2000KW HEATER FOR ES-1
11. ELECTRICALLY OPERATED TIE BREAKER.
12. F&S PANEL FOR THE COLLAR AND HEADFRAME POWER. ESTIMATED LOAD IS 20KVA.
13. ALL SUBSURFACE POWER SHALL BE PROTECTED AGAINST UNDERVOLTAGE, GROUNDED PHASE, SHORT CIRCUIT & OVER-CURRENT TO INCLUDE GROUND MONITORING RELAYS. DETAILS SHALL BE DEVELOPED DURING TITLE II EFFORTS.
14. MAIN SWITCHGEARS DISCONNECT FOR MPP-2 &MPP-3 SHALL BE ELECTRICALLY INTERLOCKED. DETAILS SHALL BE DEVELOPED DURING TITLE II EFFORTS.
15. STAND BY ENGINE GENERATOR 1400KW, 4160V, 3PH
16. PARALLELING SYNCHRONIZING POWER SYSTEM FOR ENGINE GENERATOR.
17. 200HP AIR COMPRESSOR WITH 10HP OIL COOLER & 15HP AFTER COOLER (UNIT BY F & S).
18. COMPUTER HVAC PANEL WITH MAIN SHUNT TRIP BREAKER

NOTES:

1. FOR GENERAL NOTES, SEE DRAWING JS-025-ESF-E1.
2. NOT USED.
3. NUMBER IN HEXAGON (9) IDENTIFIES ITEM AS SHOWN IN LEGEND ON DRAWING JS-025-ESF-E5.
4. FOR TEMPORARY IN-SHAFT 120/240V, 1PH UPS POWER FOR THE DATA ACQUISITION STATIONS IN SHAFT ES-1.
5. ALL PMDS SWITCHES ARE RATED AT 5KV, 600AMP.
6. ACTUAL LOADS AND DETAILS SHALL BE FURNISHED DURING TITLE II EFFORTS.
7. FOR QUALITY LEVEL REFER TO ESF QUALITY ASSURANCE LEVEL ASSIGNMENT SHEET GALAS NO. 6.2.2-0003, 6.2.2-0010, 6.3.1-0006, 6.4.2-0003, 6.5.2-0003 & 6.7.1-0003.

FOR REFERENCE DRAWINGS, SEE DRAWING T2

8901040172-132

SI APERTURE CARD

Also Available On Aperture Card

TITLE I

NO	DATE	REVISIONS	BY CH	BY DH	PE	PE/DH

U. S. DEPARTMENT OF ENERGY
NEVADA OPERATIONS OFFICE — LAS VEGAS, NEVADA

DESIGNED JAD	DRAWN TAN
CHECKED	
SAFETY	QA
PROJECT ENGINEER	

NEVADA NUCLEAR WASTE STORAGE INVESTIGATION
EXPLORATORY SHAFT FACILITY
ESSENTIAL POWER
ONE LINE DIAGRAM

SUBMITTED: 10/17/85 — AGENCY APPROVAL — DOE ACCEPTANCE — DATE: 12-16-85

HOLMES & NARVER, INC.
ARCHITECTS-ENGINEERS
ENERGY SUPPORT DIVISION
1050 E FLAMINGO ROAD LAS VEGAS NEVADA 89109

A.E. NO.	DRAWING NUMBER
84021A	JS-025-ESF-E4
W.B.S. NO. 1.2.2.2.2.1	SHEET 1 OF 1

NORTH

KEYED NOTES:

1. 20 -4"C 69-4.16KV FEEDERS & 7 SPARES)
2. 2-4"C (1-4.16KV FEEDER & 1 SPARE)
3. 90-4"C 82-4.16KV FEEDERS & 6 SPARES
4. 2 -4"C (1-4.16KV FEEDER & G4 PAD FEEDER)
5. 5-4"C (1-4.16KV FEEDER & 3 SPARES)
6. 14 -4"C (9-4.16KV FEEDERS & 5 SPARES)
7. 18 -4"C (11-4.16KV FEEDERS & 7 SPARES)
8. 4-4"C (2-4.16KV FEEDERS & 2 SPARES)
9. 3-4"C (1-4.16KV FEEDER & 1 SPARE) & 2-3"C (SPARES)
10. 10 -4"C (5-4.16KV FEEDERS & 5 SPARES)
11. 5 -4"C (3-4.16KV FEEDERS & 2 SPARES)
12. 4-3"C (2-480V FEEDERS FOR UGDR POWER & CONSTRUCTION POWER) & 2 SPARES
13. SEE DRAWING E4 FOR ONE LINE DIAGRAM
14. SEE DRAWING E3 FOR ONE LINE DIAGRAM
15. 1-2"C (SITE LIGHTING)
16. 4-4"C (2-4.16KV FEEDERS & 2 SPARES) & 2-3"C (SPARES)
17. 2-3"C (SPARES)
18. FOR 1500 HP HOIST
19. FOR 500 HP HOIST
20. FOR ES-1 SUBSURFACE MAIN PAD 4.16 KV POWER
21. FOR ES-2 SUBSURFACE MAIN PAD 4.16 KV POWER
22. 2-3"C (1-480V FEEDER & 1 SPARE) FOR COLLAR AND HEAD FRAME POWER
23. NOT USED
24. 4-3"C (1-480 V POWER & 3 SPARES)
25. PANEL BY F & S. SEE DWG E4 FOR ONE LINE DIAGRAM.
26. 2" C TO PANEL UPS/DAS.

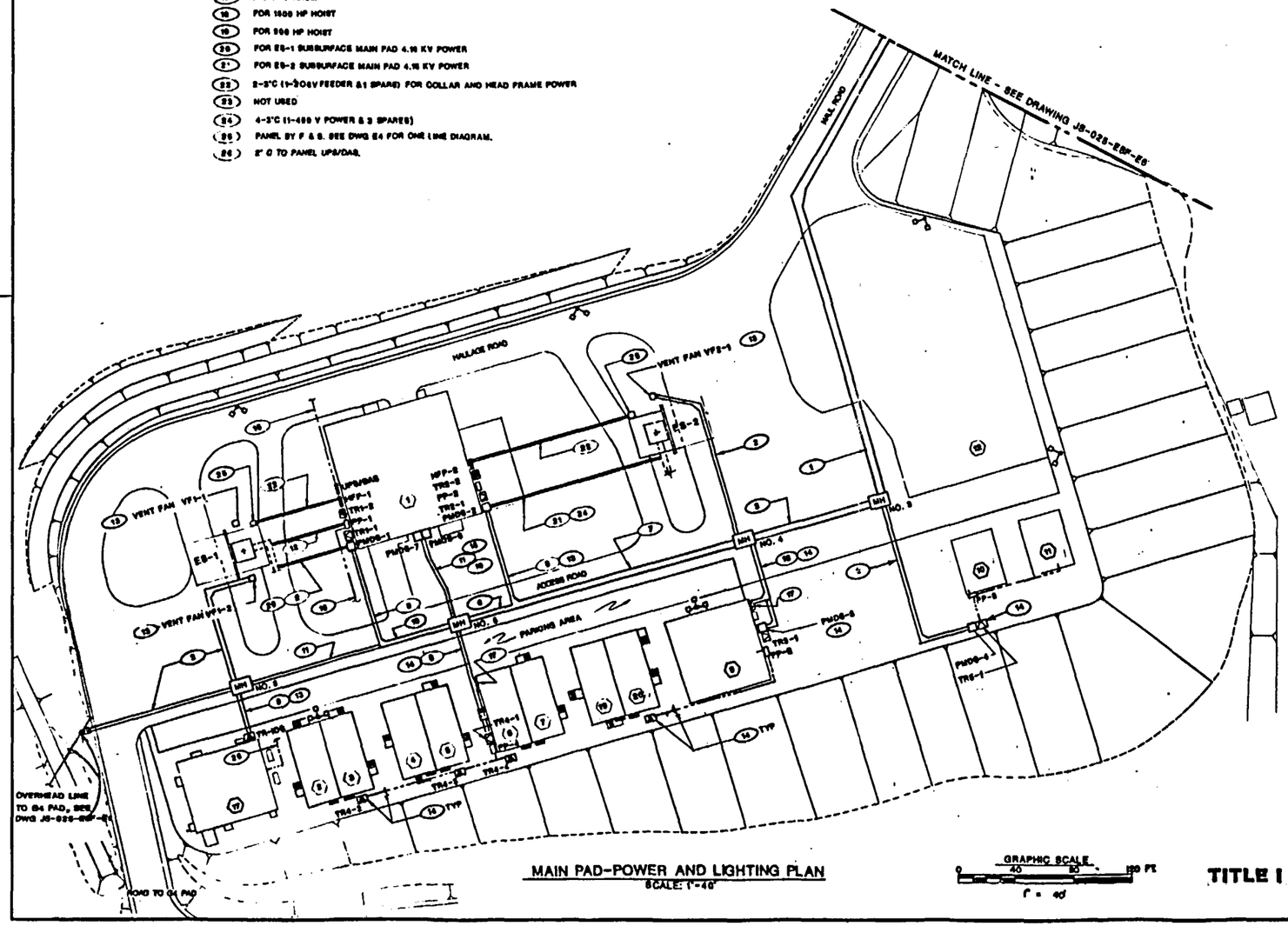

MAIN PAD-POWER AND LIGHTING PLAN
SCALE: 1"=40'

GRAPHIC SCALE
0 40 80 120 FT
1" = 40'

TITLE I

LEGEND:

1. HOIST HOUSE
2. L&ML OFFICE
3. LLNL OFFICE
4. SNL/USGS OFFICE
5. SAIC OFFICE
6. H & N/F & S OFFICE
7. DOE/NRC/STATE OF NEVADA
8. SAFETY GROUNDING GRID (SEE DWG JS-025-ESF-E6)
9. CHANGE HOUSE/REECO SAFETY
10. SHOP
11. UNASSIGNED
12. SUBCONTRACTORS AREA
13. COMPRESSOR PAD (SEE DWG JS-025-ESF-E6)
14. BURIED FUEL TANK (SEE DWG JS-025-ESF-E6)
15. SUBSTATION (SEE DWG JS-025-ESF-E6)
16. STANDBY ENGINE-GENERATOR BUILDING (SEE DWG JS-025-ESF-E6)
17. SURFACE DATA BUILDING
18. MICROWAVE TOWER (SEE DWG JS-025-ESF-E6)
19. REECO TRAILER
20. REECO TRAILER
21. COMMUNICATIONS SHELTER (SEE DWG JS-025-ESF-E6)
22. PARKING AREA FOR TRAILER & CRANE (SEE DWG JS-025-ESF-E6)

- DISCONNECT SWITCH (5 KV)
- TRANSFORMER (4.16KV-480Y/277V)
- TRANSFORMER (480-208Y/120V)
- POWER PANEL (480/277V)
- LIGHTING PANEL (208/120V)
- LIGHTING FIXTURE (NOTE 2)
- MH MANHOLE
- CONCRETE ENCASED DUCT BANK (NOTE 4)
- DIRECT BURIAL CONDUIT (MIN 18" BELOW GRADE)

SI APERTURE CARD

Also Available On Aperture Card

NOTES:

1. FOR GENERAL NOTES, SEE DWG. JS-025-ESF-E1.
2. ALL CONDUIT SIZES INDICATED ARE ASSUMED.
3. LIGHT FIXTURE-1000W HIGH PRESSURE SODIUM FLOODLIGHT TYPE, MOUNTED AT TOP OF 40 FT. POLE, QUANTITY OF FIXTURES AS INDICATED IN SYMBOL.
4. TOP OF DUCT BANK TO BE INSTALLED A MINIMUM OF 48" BELOW FINISHED ROAD OR PARKING AREA WITH A 4"/50' DRAIN SLOPE TOWARD MANHOLE AND TO HAVE A MINIMUM OF 6" CONCRETE ENCASEMENT AT THE TOP, BOTTOM AND SIDES.
5. THE PANELS & TRANSFORMERS SHOWN ALONG BOTH SIDES OF THE HOIST HOUSE ARE SHOWN DIAGRAMMATICALLY & WILL BE LOCATED DURING THE TITLE II EFFORTS.
6. FOR QUALITY LEVEL REFER TO QMP QUALITY ASSURANCE LEVEL ASSIGNMENT SHEET QALAS NO. 8.3.2-0003, 8.3.2-0004, 8.3.2-0005, 8.3.1-0001 & 8.3.1-0006.

FOR REFERENCE DRAWINGS, SEE DRAWING T2

890104 0172-133

NO.	DATE	REVISIONS	BY	CK	EAP	QA	PE	SE	KCM/TOM

U. S. DEPARTMENT OF ENERGY
NEVADA OPERATIONS OFFICE — LAS VEGAS, NEVADA

DESIGNED JDM — DRAWN M.B.P. — CHECKED LAD — SAFETY NA — QA PLS — PROJECT ENGINEER

NEVADA NUCLEAR WASTE STORAGE INVESTIGATION
EXPLORATORY SHAFT FACILITY
MAIN PAD
POWER AND LIGHTING PLAN

SUBMITTED: [signature] ENGINEER, HOLMES & NARVER INC. — AGENCY APPROVAL — DOE ACCEPTANCE: [signature] — DATE: 12-15-89

HOLMES & NARVER, INC.
ARCHITECTS-ENGINEERS
ENERGY SUPPORT DIVISION
1050 E. FLAMINGO ROAD LAS VEGAS NEVADA 89109

L. D. NO. 20001A — W.B.S. NO. 1.2.6.2.2.1 — DRAWING NUMBER JS-025-ESF-E5 — SHEET 1 OF 1

12 11 10 9 8 7 6 5 4 3 2 1
H G F E D C B A

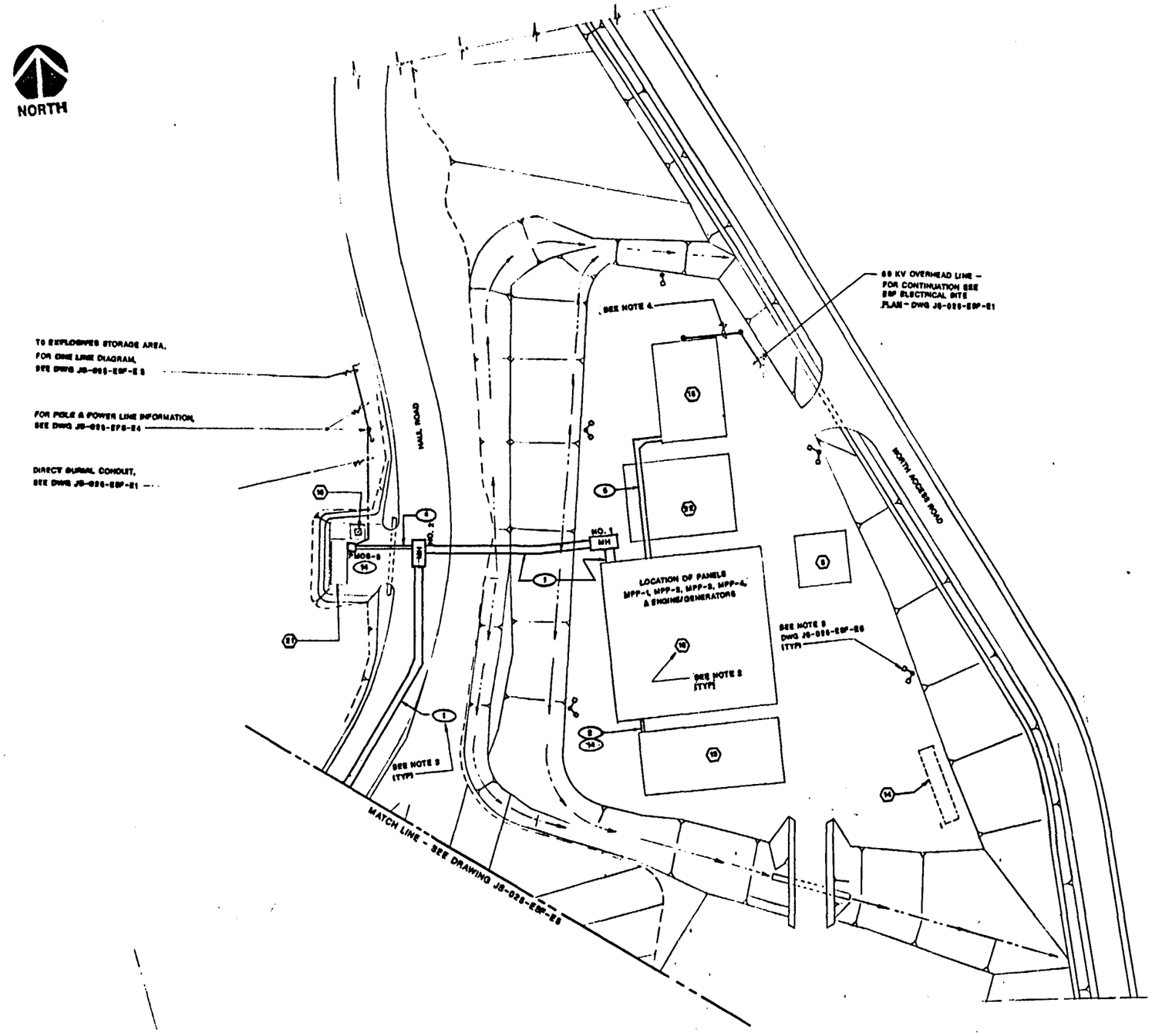

POWER AND LIGHTING PLAN
SCALE: 1"=40'

GRAPHIC SCALE
0 40 80 120 FT
1" = 40'

TITLE 1

SI APERTURE CARD..
Also Available On Aperture Card

NOTES:

1. FOR LEGEND AND NOTES, SEE DRAWING JS-025-ESF-E6
2. NUMBER IN HEXAGON (1) IDENTIFIES ITEM AS SHOWN IN LEGEND ON DRAWING JS-025-ESF-E6
3. NUMBER IN ELLIPSE (1) DESCRIBES NOTE AS SHOWN UNDER KEYED NOTES ON DRAWING JS-025-ESF-E6.
4. 69 KV BLACK SPAN CONSTRUCTION SIMILAR TO STD # 80804 OF THE DOE/NV OVERHEAD POWER LINE STANDARDS.
5. FOR GENERAL NOTES, SEE DRAWING JS-025-ESF-E1.
6. FOR QUALITY LEVEL REFER TO ESF QUALITY ASSURANCE LEVEL ASSIGNMENT SHEET QALAS NO. 0.2.2-0002, 0.2.3-0003, 0.2.3-0004 & 0.2.2-0010.

FOR REFERENCE DRAWINGS, SEE DRAWING T2

890.1040172-134

NO	DATE	REVISIONS	BY	BAP	PE	KAM
			LR	QA	RE	DPM

U. S. DEPARTMENT OF ENERGY
NEVADA OPERATIONS OFFICE — LAS VEGAS, NEVADA

NEVADA NUCLEAR WASTE STORAGE INVESTIGATION
EXPLORATORY SHAFT FACILITY
SUBSTATION PAD
POWER AND LIGHTING PLAN

DESIGNED M.S.F. DRAWN M.S.F. CHECKED L.J.D. SPECS N/A QA N/A WORK (C) ENGINEER L.A.C.

SUBMITTED Douglas E. Glover — HOLMES & NARVER, INC. — AGENCY APPROVAL — DOE REPRESENTATIVE — DATE 12-15-88

HOLMES & NARVER, INC.
ARCHITECTS-ENGINEERS
ENERGY SUPPORT DIVISION
1050 E. FLAMINGO ROAD LAS VEGAS NEVADA 89109

L.E. NO. 80081A
W.B.S. NO. 1.2.2.2.2.1
DRAWING NUMBER JS-025-ESF-E6
SHEET 1 OF 1

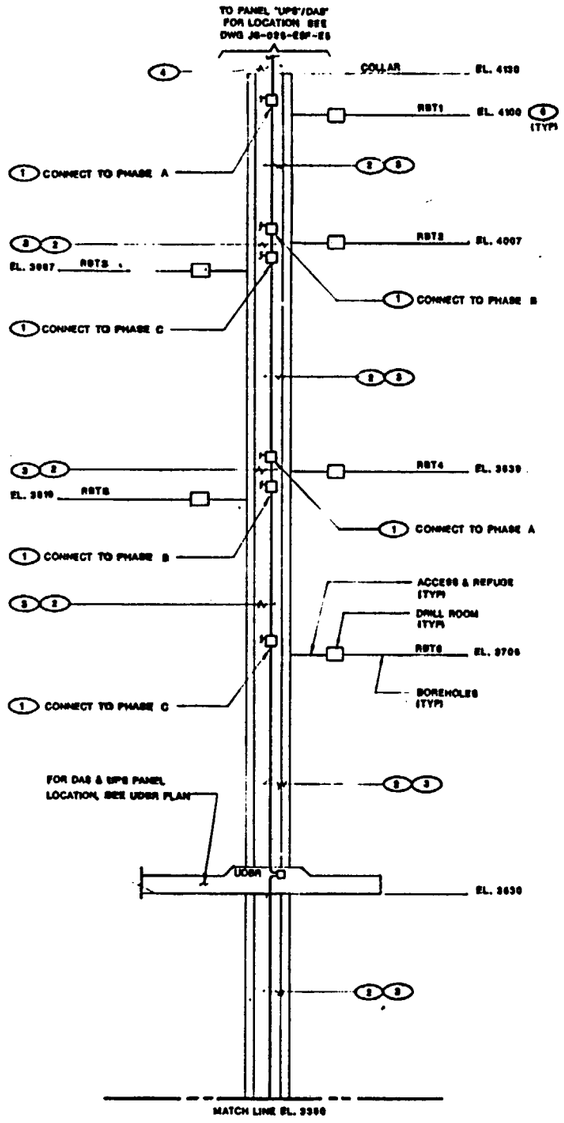

DAS UPS POWER RISER DIAGRAM
SCALE: 1" = 50'

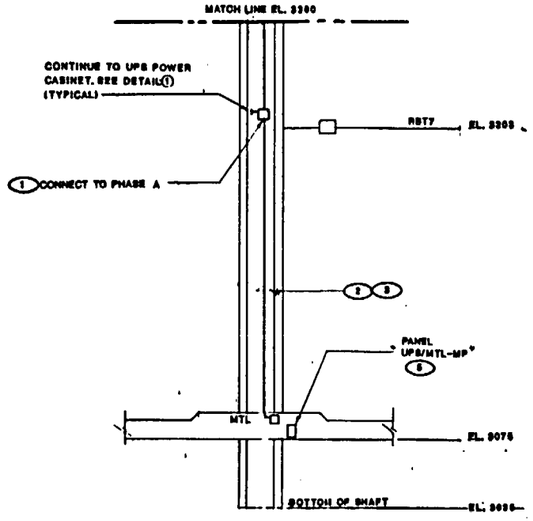

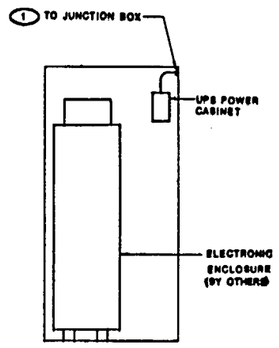

DETAIL 1
SCALE: NONE

KEYED NOTES

1. JUNCTION BOX LOCATED APPROXIMATELY 10 FT ABOVE BOREHOLE FOR CONNECTING TEMPORARY 208 VOLT FEEDERS TO PHASES AS SHOWN ON THIS DRAWING FOR DAS AND UDBR UPS POWER. SEE ONE LINE DIAGRAM JS-025-ESF-E3.
2. CABLES INSTALLED ARE FOR TEMPORARY DOWNSHAFT POWER AND ARE TO REMAIN IN PLACE FOR PERMANENT POWER CONNECTION.
3. CABLE SUPPORTS & INSTALLATION DETAILS TO BE DESIGNED BY F&S.
4. FOR TEMPORARY POWER, ROUTE CABLE FROM JUNCTION BOX TO PANEL "UPS/DAS" LOCATED AT THE HOIST HOUSE. THIS CABLE WILL BE REMOVED WHEN PERMANENT CONNECTIONS ARE MADE.
5. SEE MAIN TEST LEVEL UPS DISTRIBUTION DWG JS-025-ESF-E3.
6. ELEVATIONS OF BOREHOLES ARE APPROXIMATE.

NOTES

1. FOR GENERAL NOTES, SEE DRAWING JS-025-ESF-E1.
2. FOR QUALITY LEVEL REFER TO ESF QUALITY ASSURANCE LEVEL ASSIGNMENT SHEET QALAS NO. 8.7.1-5005.

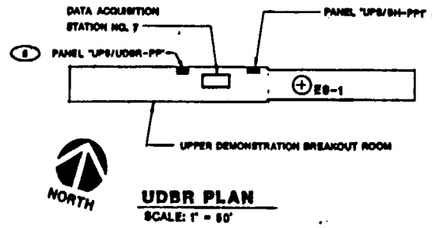

UDBR PLAN
SCALE: 1" = 50'

SI
APERTURE
CARD

Also Available On
Aperture Card

890 1040172-135

FOR REFERENCE DRAWINGS, SEE DRAWING T2.

GRAPHIC SCALE
0 50 100 150 FT
1" = 50'

TITLE I

NO	DATE	REVISIONS	BY / CH	CHK / QA	PE / E	CM / QCM

U. S. DEPARTMENT OF ENERGY
NEVADA OPERATIONS OFFICE — LAS VEGAS, NEVADA

DESIGNED M.D.P.	DRAWN M.D.P.
CHECKED	
SAFETY HA	QA APD
PROJECT ENGINEER	
SUBMITTED (DATE)	AGENCY APPROVAL (DATE)
HOLMES & NARVER, INC.	

NEVADA NUCLEAR WASTE STORAGE INVESTIGATION
EXPLORATORY SHAFT FACILITY
SHAFT ES-1
DAS UPS POWER RISER DIAGRAM

DOE ACCEPTANCE — DATE 12-15-88

HOLMES & NARVER, INC.
ARCHITECTS-ENGINEERS
ENERGY SUPPORT DIVISION
1050 E FLAMINGO ROAD LAS VEGAS NEVADA 89109

L.D. NO. 90088A
W.B.S. NO. 1.2.6.7.1.1
DRAWING NUMBER JS-025-ESF-E7
SHEET 1 OF 1

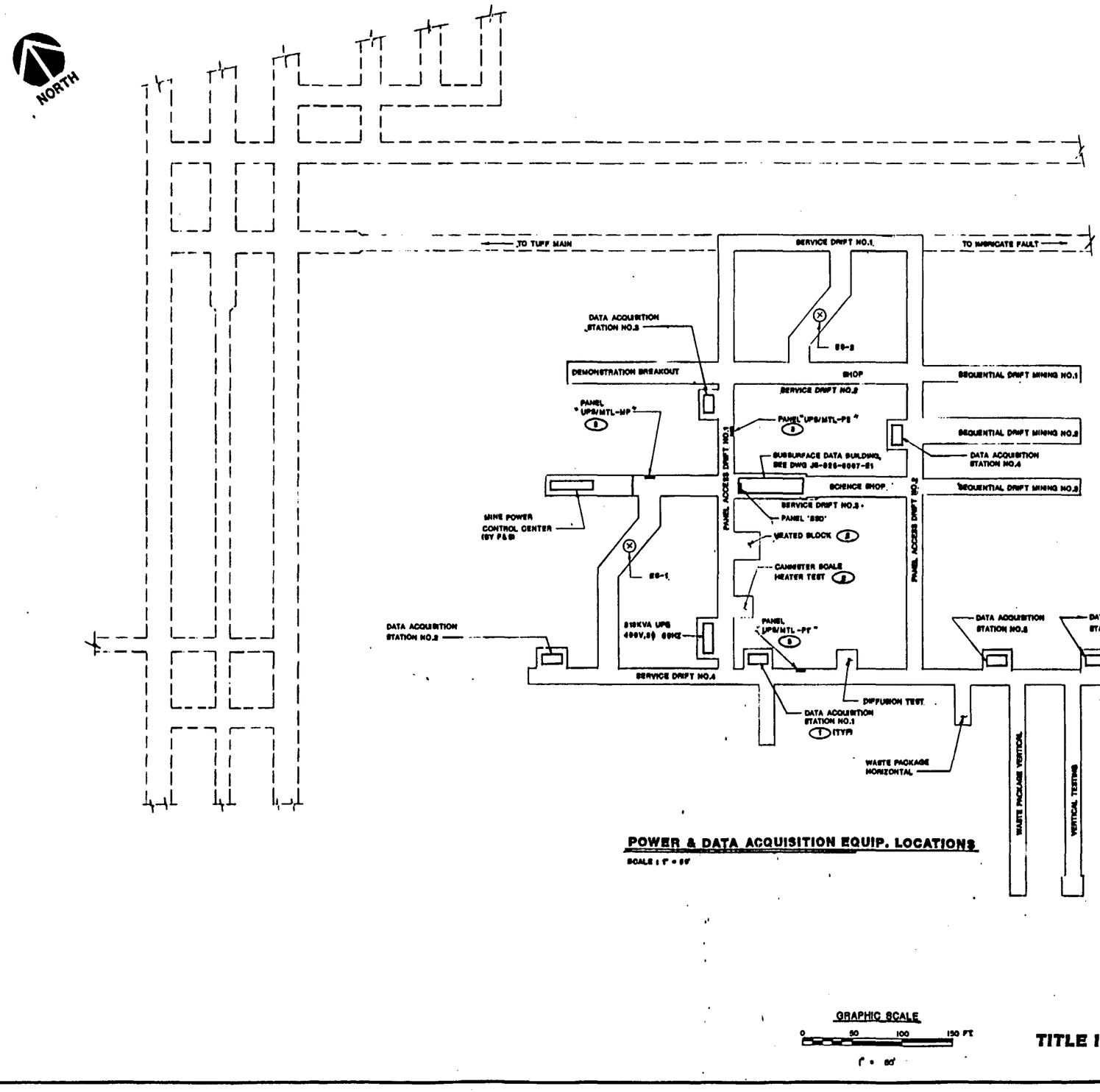

POWER & DATA ACQUISITION EQUIP. LOCATIONS

SCALE 1" = 50'

GRAPHIC SCALE
0 50 100 150 FT
1" = 50'

TITLE I

KEYED NOTES

1. DATA ACQUISITION STATIONS BY OTHERS.
2. HEATED BLOCK AND CANNISTER SCALE HEATER TEST ELECTRICAL LOAD REQUIREMENTS ARE NOT AVAILABLE FOR THE TITLE I DESIGN. LOADS TO BE DEVELOPED DURING TITLE II EFFORTS.
3. SEE MAIN TEST LEVEL UPS DISTRIBUTION DWG JS-025-ESF-E9.

NOTES

1. FOR GENERAL NOTES, SEE DRAWING JS-025-ESF-E1.
2. FOR QUALITY LEVEL REFER TO SCP QUALITY ASSURANCE LEVEL ASSIGNMENT SHEET QALAS NO. 8.7.1-0002 & 8.7.1-0006.

SI
APERTURE
CARD

Also Available On
Aperture Card

FOR REFERENCE DRAWINGS, SEE DRAWING T2.

8901040172-136

NO	DATE	REVISIONS	BY	CK	APP	M & E	MGR. DOE

U. S. DEPARTMENT OF ENERGY
NEVADA OPERATIONS OFFICE — LAS VEGAS, NEVADA

DESIGNED M.S.F.	DRAWN M.S.F.
CHECKED	
SAFETY N/A	QA Pas
PROJECT ENGINEER	

NEVADA NUCLEAR WASTE STORAGE INVESTIGATION
EXPLORATORY SHAFT FACILITY
MAIN TEST LEVEL
PWR & DATA ACQ EQUIP LOCATIONS

SUBMITTED: 1/17/89 — HOLMES & NARVER, INC.
AGENCY APPROVAL
DOE ACCEPTANCE — DATE: 12-15-89

HOLMES & NARVER, INC.
ARCHITECTS–ENGINEERS
ENERGY SUPPORT DIVISION
1050 E. FLAMINGO ROAD LAS VEGAS, NEVADA 89109

L.D. NO. 800258A
W.B.S. NO. 1.2.0.7.1.1
DRAWING NUMBER JS-025-ESF-E8
SHEET 1 OF 1

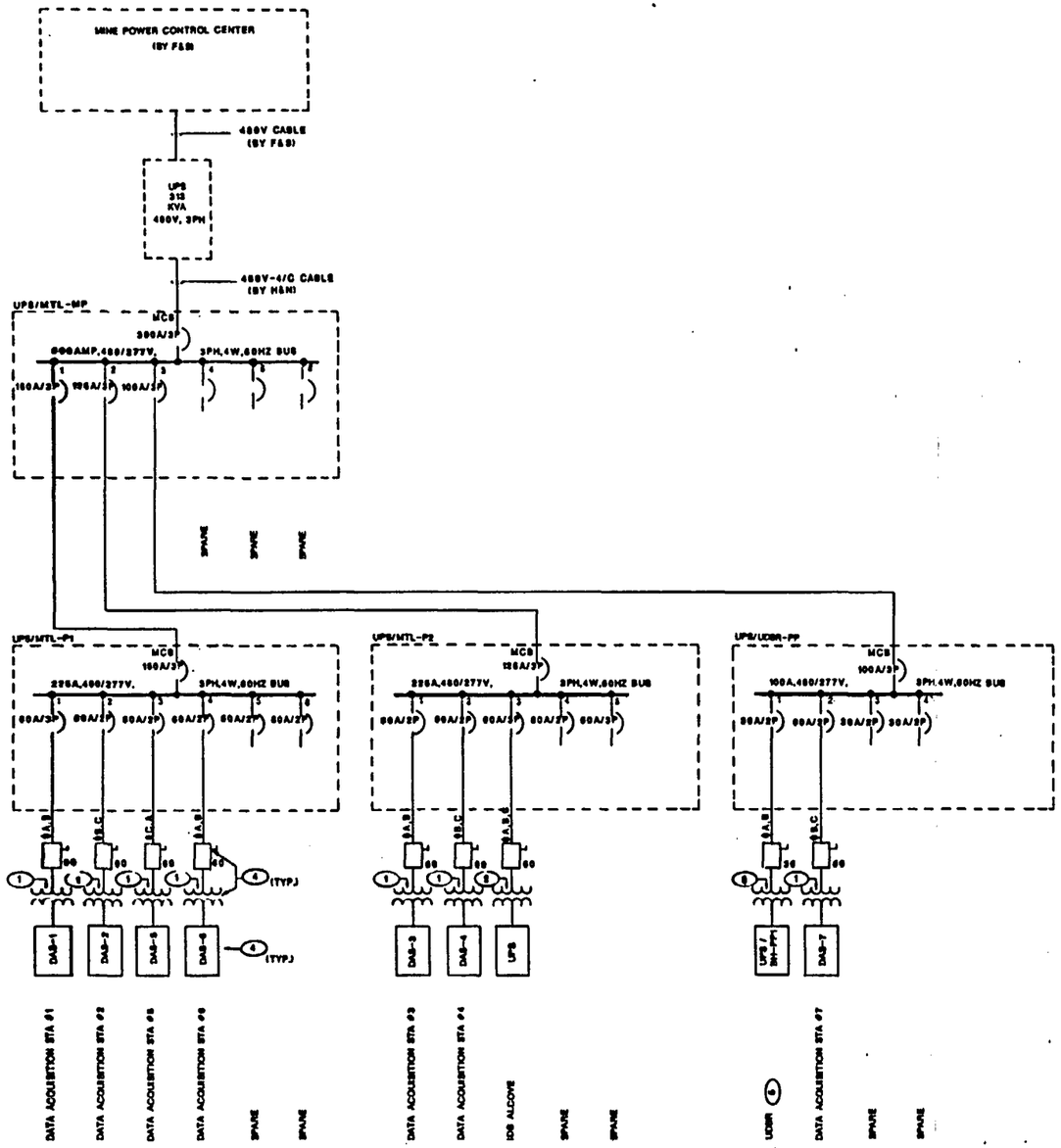

UPS DISTRIBUTION - ONE LINE DIAGRAM

TITLE I

KEYED NOTES

1. TRANSFORMER,25KVA,480-120/240V,1PH,60HZ.
2. TRANSFORMER,45KVA,480-208Y/120V,3PH,60HZ.
3. TRANSFORMER,5KVA,480-120/240V,1PH,60HZ.
4. PANELS, TRANSFORMERS AND DISCONNECT SWITCHES ARE TO BE LOCATED IN ALCOVES FOR EACH DATA ACQUISITION STATION, UDBR AND CHDR.
5. IN-SHAFT DATA ACQUISITION STATIONS LOCATED IN ES-1 SHAFT, SHALL BE FED FROM PANEL UPS/BH-PP1 IN THE UDBR, ONCE THE 313KVA UPS BECOMES OPERATIONAL.

NOTES

1. FOR GENERAL NOTES, SEE DRAWING JS-025-ESF-E1.
2. FOR QUALITY LEVEL REFER TO ESF QUALITY ASSURANCE LEVEL ASSIGNMENT SHEET QALAS NO. 8.7.1-0002.

SI
APERTURE
CARD

Also Available On
Aperture Card

FOR REFERENCE DRAWINGS, SEE DRAWING T2

8901040172-137

NO	DATE	REVISIONS	BY	CK	QA	PE	AE	ICH	DOE

U. S. DEPARTMENT OF ENERGY
NEVADA OPERATIONS OFFICE — LAS VEGAS, NEVADA

DESIGNED M.S.P. — DRAWN T.A.H.
CHECKED
SAFETY NA — QA PPS
PROJECT ENGINEER
SUBMITTED — HOLMES & NARVER, INC.
AGENCY APPROVAL
SITE ACCEPTANCE — DATE 12-15-88

NEVADA NUCLEAR WASTE STORAGE INVESTIGATION
EXPLORATORY SHAFT FACILITY
ONE LINE DIAGRAM
MAIN TEST LEVEL UPS DISTRIBUTION

HOLMES & NARVER, INC.
ARCHITECTS-ENGINEERS
ENERGY SUPPORT DIVISION
1050 E. FLAMINGO ROAD LAS VEGAS NEVADA 89109

L.D. NO. 60023 A
W.B.S. NO. 1.2.8.7.1.1
DRAWING NUMBER JS-025-ESF-E1
SHEET 1 OF 1

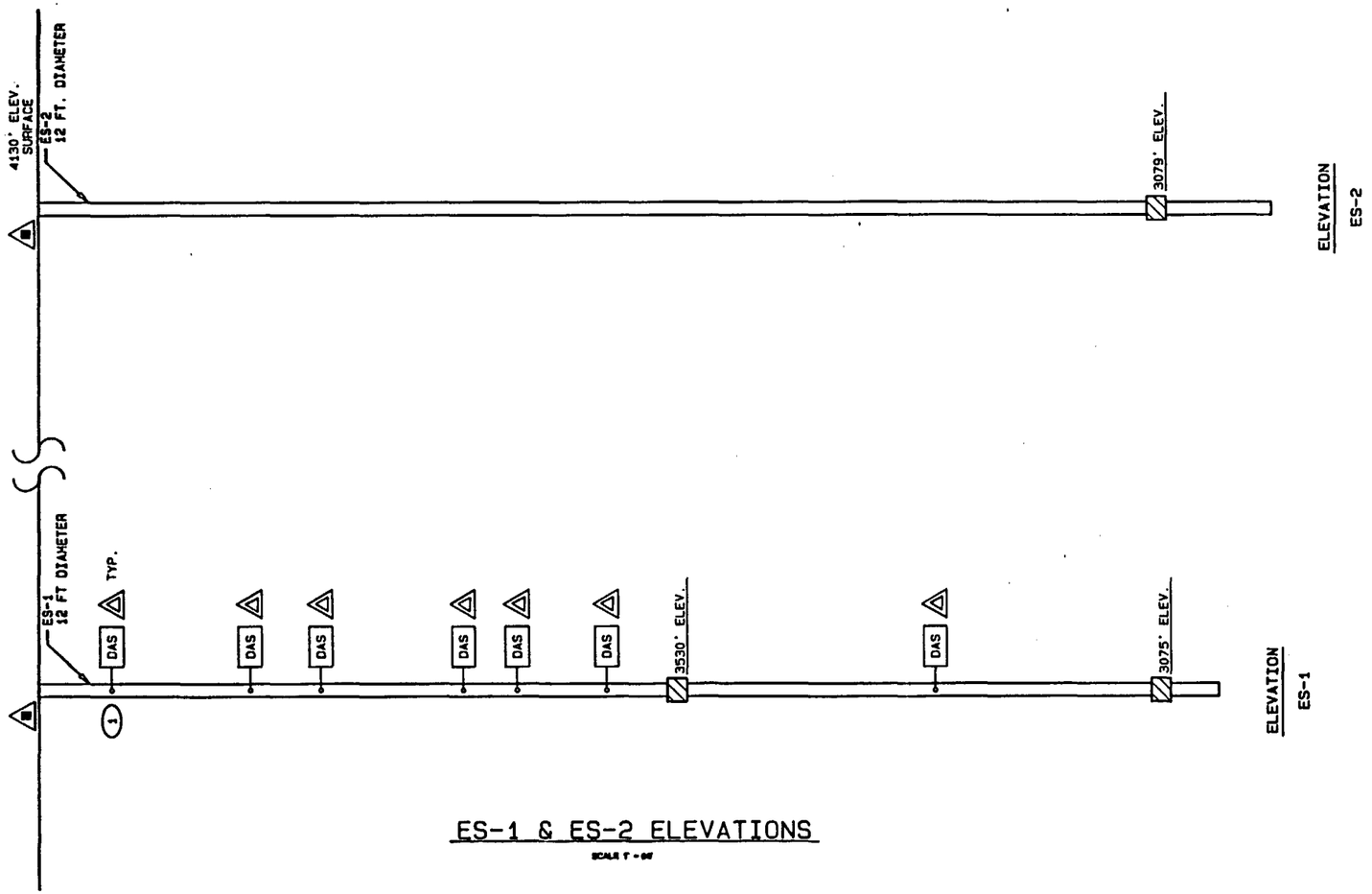

ES-1 & ES-2 ELEVATIONS

SCALE 1" = 60'

GRAPHIC SCALE

60' 0' 60' 120' 180'

1" = 60'

GENERAL NOTES:

1. THIS TITLE I DRAWING DEPICTS ONLY THE MAJOR DESIGN FEATURES OF THIS PROJECT. ALL DETAILS, EQUIPMENT DESCRIPTIONS AND SPECIAL INSTRUCTIONS SHALL BE DEVELOPED DURING TITLE II EFFORT.
2. FOR SYMBOLS AND ABBREVIATIONS SEE DRAWING JS-025-ESF-T3, T4 & T5
3. FOR DRAWING INDEX SEE DRAWING JS-025-ESF-T2.
4. QALA TBD

KEYED NOTES:

(1) THE EXACT LOCATIONS OF ALL DATA ACQUISITION STATIONS [DAS] SHALL BE DETERMINED BY OTHERS.

SI
APERTURE
CARD

Also Available On
Aperture Card

TITLE I

NO.	DATE	REVISIONS	BY	BJ	PE	ISM
			CH	QA	AE	DOE

U.S. DEPARTMENT OF ENERGY
NEVADA OPERATIONS OFFICE — LAS VEGAS, NEVADA

NEVADA NUCLEAR WASTE STORAGE INVESTIGATION
EXPLORATORY SHAFT FACILITY
FIRE PROTECTION SYSTEMS

ES-1 & ES-2 ELEVATIONS

DESIGNED: DJK | DRAWN: PALAGI | CHECKED: | SAFETY: N/A | PROJECT ENGINEER:
SUBMITTED: HOLMES & NARVER INC. | AGENCY APPROVAL | DOE ACCEPTANCE | DATE: 12-15-92

HOLMES & NARVER INC.
ARCHITECTS-ENGINEERS
ENERGY SUPPORT DIVISION
1000 E. FLAMINGO ROAD LAS VEGAS, NEVADA 89119

I.D. NO. 500238 V004541-2
WBS NO. 1.2.6.7.1.2
DRAWING NUMBER JS-025-ESF-FP1
SHEET 1 OF 1

8901040172-138

NORTH

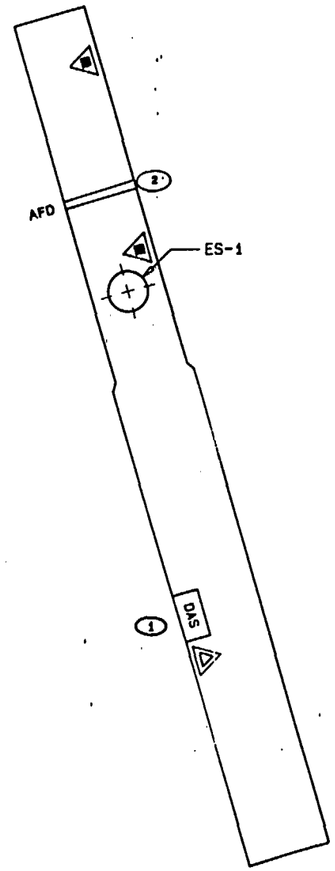

UPPER DEMONSTRATION BREAKOUT ROOM (UDBR) PLAN
ELEVATION = 3530'
SCALE 1" = 20'

GRAPHIC SCALE
20' 0' 20' 40' 60'
1" = 20'

TITLE I

GENERAL NOTES:

1. THIS TITLE I DRAWING DEPICTS ONLY THE MAJOR DESIGN FEATURES OF THIS PROJECT. ALL DETAILS, EQUIPMENT DESCRIPTIONS AND SPECIAL INSTRUCTIONS SHALL BE DEVELOPED DURING TITLE II EFFORT.
2. FOR SYMBOLS AND ABBREVIATIONS SEE DRAWING JS-025-ESF-T3,T4 & T5
3. FOR DRAWING INDEX SEE DRAWING JS-025-ESF-T2.
4. QALA TBD

KEYED NOTES:

(1) THE EXACT LOCATIONS OF ALL DATA ACQUISITION STATIONS [DAS] SHALL BE DETERMINED BY OTHERS.

(2) THE EXACT LOCATION OF ALL FIRE DOORS SHALL BE DETERMINED BY OTHERS.

SI
APERTURE
CARD

Also Available On
Aperture Card

8901040172-139

NO.	DATE	REVISIONS	BY	CK	LJJ	BA	PE	AE	LDM	DOE

U.S. DEPARTMENT OF ENERGY
NEVADA OPERATIONS OFFICE — LAS VEGAS, NEVADA

DESIGNED: D.K. | DRAWN: PALAGI
CHECKED:
SAFETY: NA
PROJECT ENGINEER:

NEVADA NUCLEAR WASTE STORAGE INVESTIGATION
EXPLORATORY SHAFT FACILITY
FIRE PROTECTION SYSTEMS

UDBR PLAN

SUBMITTED: HOLMES & NARVER INC. | AGENCY APPROVAL | DOE ACCEPTANCE | DATE

HOLMES & NARVER INC.
ARCHITECTS-ENGINEERS
ENERGY SUPPORT DIVISION
1050 E. FLAMINGO ROAD LAS VEGAS, NEVADA 89119

I.D. NO. 500238 V004542-2
VER NO. 1.2.0.7.1.7

DRAWING NUMBER: JS-025-ESF-FP2
SHEET 1 OF 1

12 11 10 9 8 7 6 5 4 3 2 1
H G F E D C B A

NORTH

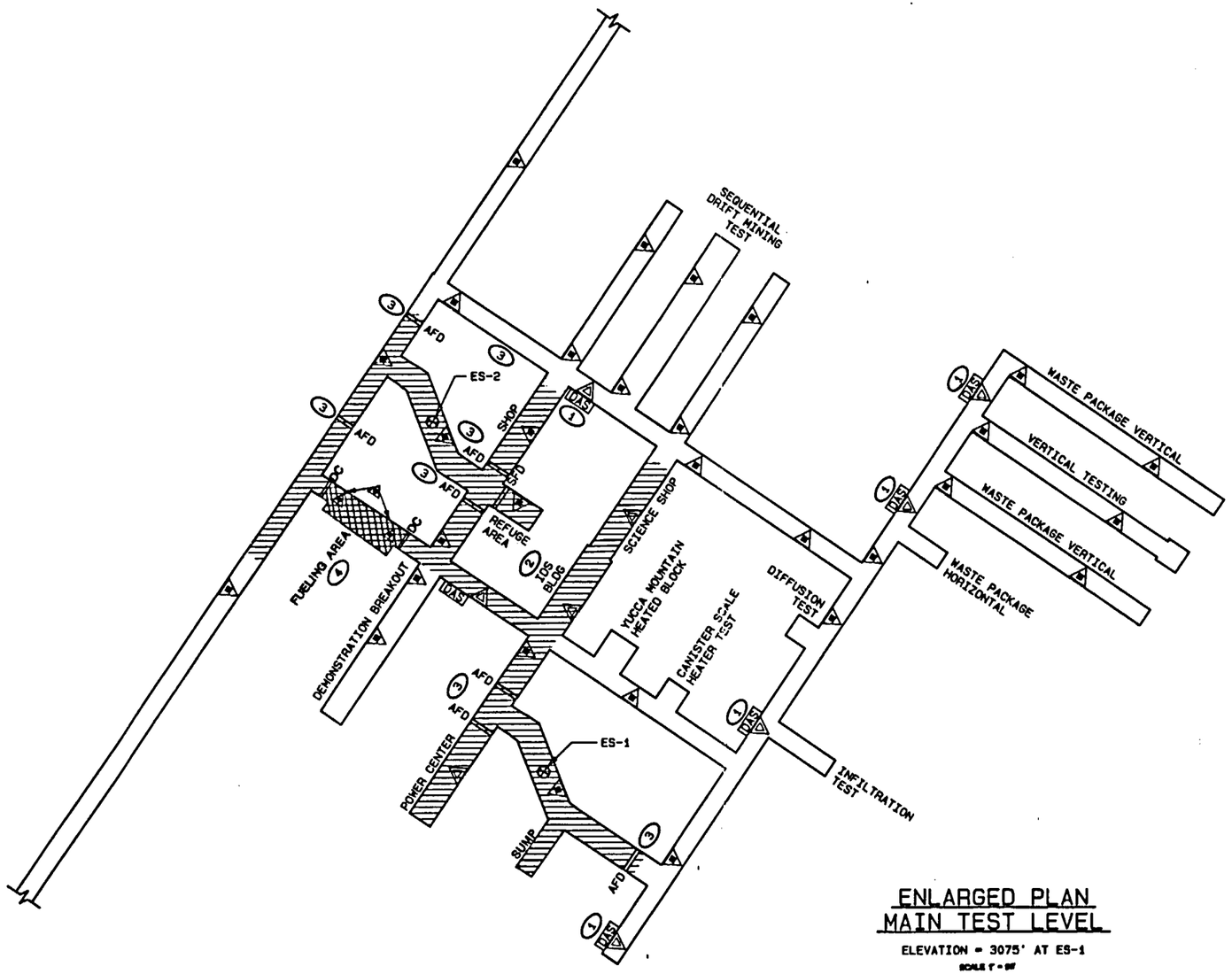

ENLARGED PLAN
MAIN TEST LEVEL

ELEVATION = 3075' AT ES-1

SCALE 1" = 50'

GRAPHIC SCALE
50' 0' 50' 100' 150'
1" = 50'

TITLE I

GENERAL NOTES:

1. THIS TITLE I DRAWING DEPICTS ONLY THE MAJOR DESIGN FEATURES OF THIS PROJECT. ALL DETAILS, EQUIPMENT DESCRIPTIONS AND SPECIAL INSTRUCTIONS SHALL BE DEVELOPED DURING TITLE II EFFORT.
2. FOR SYMBOLS AND ABBREVIATIONS SEE DRAWING JS-025-ESF-T3, T4 & T5
3. FOR DRAWING INDEX SEE DRAWING JS-025-ESF-T2.
4. QALA TBD

KEYED NOTES:

(1) THE EXACT LOCATION OF ALL DATA ACQUISITION STATIONS [DAS] SHALL BE DETERMINED BY OTHERS.

(2) FOR FIRE PROTECTION INSIDE IDS BLDG. SEE SHEET JS-025-0007-FP1. PROTECTION SHOWN IS FOR ALCOVE.

(3) THE EXACT LOCATION OF ALL FIRE DOORS SHALL BE DETERMINED BY OYHERS.

(4) THE EXACT LOCATION AND SIZE OF THE FUELING AREA SHALL BE DETERMINED BY OTHERS.

REFERENCE DRAWINGS

MTL EXTENSION DRIFTS----------FP4

SI
APERTURE
CARD

Also Available On
Aperture Card

8901040172-140

NO.	DATE	REVISIONS	BY CK	BAP BA	PE AE	ADM DOE

U.S. DEPARTMENT OF ENERGY
NEVADA OPERATIONS OFFICE — LAS VEGAS, NEVADA

DESIGNED: DJM	DRAWN: PALAGI
CHECKED: [illegible]	
SAFETY: NA	QA: [illegible]
PROJECT ENGINEER: [illegible]	

NEVADA NUCLEAR WASTE STORAGE INVESTIGATION
EXPLORATORY SHAFT FACILITY
FIRE PROTECTION SYSTEMS

MAIN TEST LEVEL PLAN

SUBMITTED: HOLMES & NARVER INC.	AGENCY APPROVAL	DOE ACCEPTANCE	DATE

HOLMES & NARVER INC.
ARCHITECTS-ENGINEERS
ENERGY SUPPORT DIVISION
1000 E. FLAMINGO ROAD LAS VEGAS, NEVADA 89119

I.D. NO. 500236
VO04543-2
WBS NO. 1.2.6.7.1.2

DRAWING NUMBER: JS-025-ESF-FP3
SHEET 1 OF 1

12 11 10 9 8 7 6 5 4 3 2 1
H G F E D C B A

NORTH

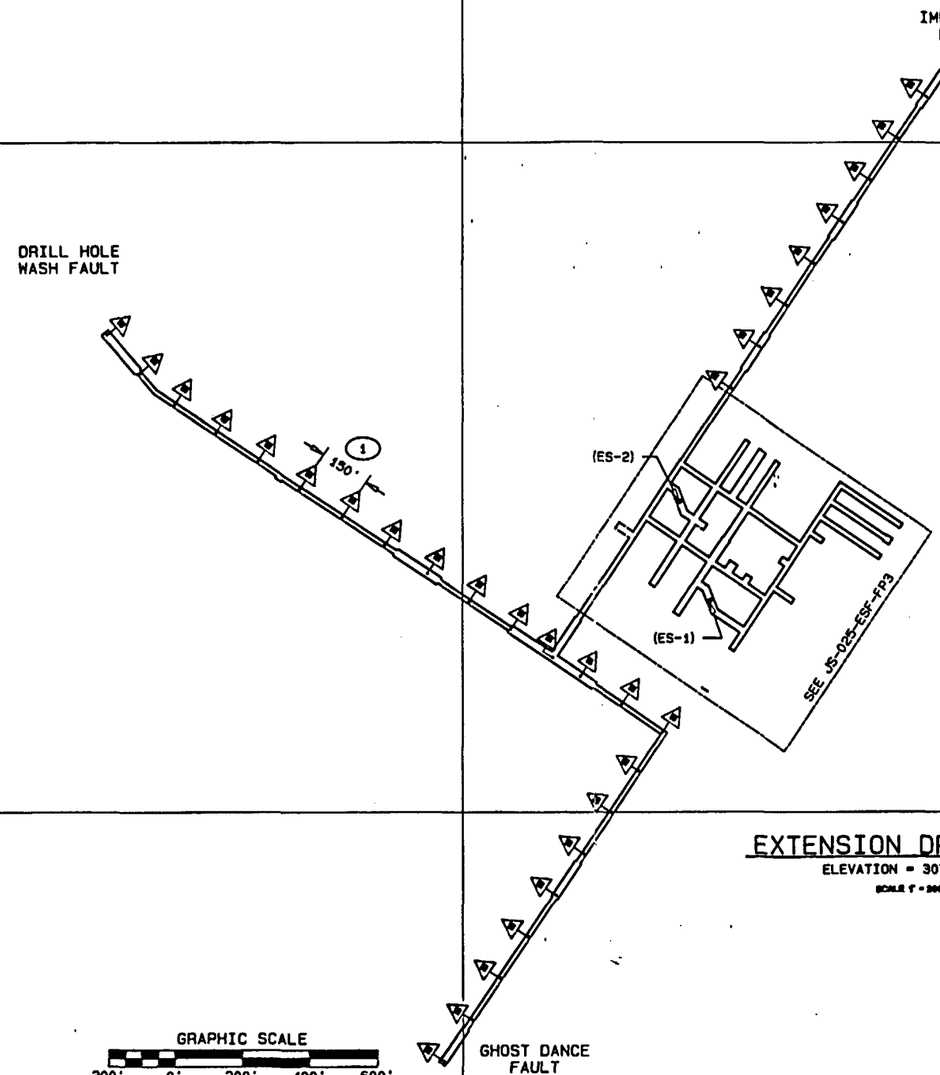

565,000

563,000

769,000

767,000

765,000

GENERAL NOTES:

1. THIS TITLE I DRAWING DEPICTS ONLY THE MAJOR DESIGN FEATURES OF THIS PROJECT. ALL DETAILS, EQUIPMENT DESCRIPTIONS AND SPECIAL INSTRUCTIONS SHALL BE DEVELOPED DURING TITLE II EFFORT.
2. FOR SYMBOLS AND ABBREVIATIONS SEE DRAWING JS-025-ESF-T3, T4 & T5
3. FOR DRAWING INDEX SEE DRAWING JS-025-ESF-T2.
4. QALA TBD

KEYED NOTES:

(1) TYPICAL SPACING FOR FIRE EXTINGUISHER (F) IS 150 FEET.

EXTENSION DRIFTS PLAN

ELEVATION = 3075' AT ES-1

SCALE 1" = 200'

TITLE I

SI
APERTURE
CARD

Also Available On
Aperture Card

8901040172-141

NO.	DATE	REVISIONS	BY	CK	SUP	BA	PE	AE	ADM	DOE

U.S. DEPARTMENT OF ENERGY
NEVADA OPERATIONS OFFICE — LAS VEGAS, NEVADA

DESIGNED: DJK	DRAWN: PALAGI
CHECKED:	
SAFETY: NA	
PROJECT ENGINEER	

NEVADA NUCLEAR WASTE STORAGE INVESTIGATION
EXPLORATORY SHAFT FACILITY
FIRE PROTECTION SYSTEMS
EXTENSION DRIFTS PLAN

SUBMITTED: HOLMES & NARVER INC. — AGENCY APPROVAL — DOE ACCEPTANCE — DATE 12-15-88

HOLMES & NARVER INC.
ARCHITECTS-ENGINEERS
ENERGY SUPPORT DIVISION
1600 E. FLAMINGO ROAD LAS VEGAS, NEVADA 89119

I.D. NO. 500236 V004544-2
WBS NO. 1.2.0.7.1.2

DRAWING NUMBER JS-025-ESF-FP4
SHEET 1 OF 1

12 11 10 9 8 7 6 5 4 3 2 1

H G F E D C B A

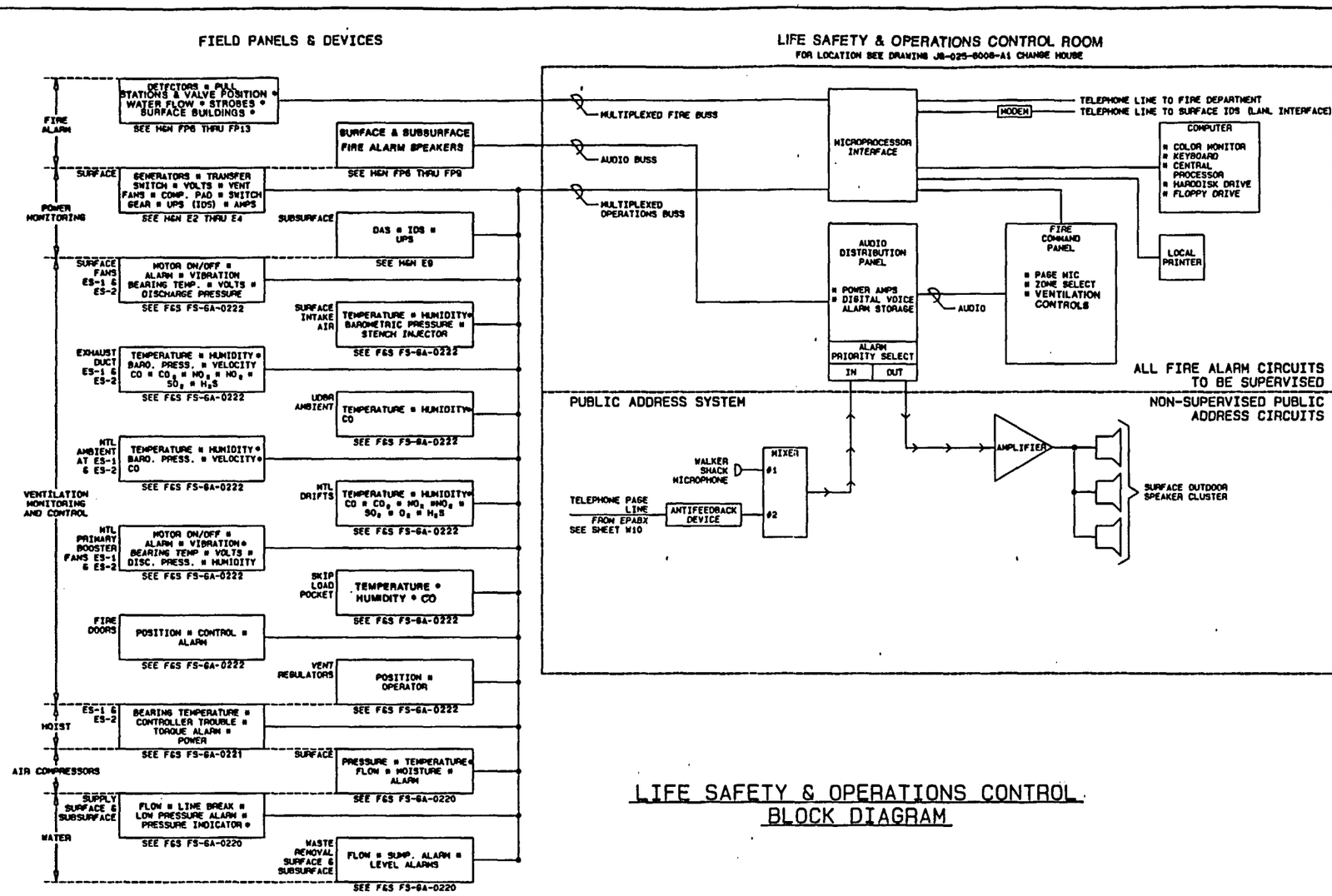

LIFE SAFETY & OPERATIONS CONTROL
BLOCK DIAGRAM

TITLE I

GENERAL NOTES:

1. THIS TITLE I DRAWING DEPICTS ONLY THE MAJOR DESIGN FEATURES OF THIS PROJECT. ALL DETAILS, EQUIPMENT DESCRIPTIONS AND SPECIAL INSTRUCTIONS SHALL BE DEVELOPED DURING TITLE II EFFORT.
2. FOR SYMBOLS AND ABBREVIATIONS SEE DRAWING JS-025-ESF-T3,T4 & T5
3. FOR DRAWING INDEX SEE DRAWING JS-025-ESF-T2.
4. QALA TBD
5. ALL FIRE ALARM CIRCUITS, EQUIPMENT AND DEVICES SHALL HAVE UL - LISTED COMPONENTS OR BE FM APPROVED.

SI
APERTURE
CARD

Also Available On
Aperture Card

8901040172-142

NO.	DATE	REVISIONS	BY	CK	RAP	QA	PE	AE	ADM	DOE

U.S. DEPARTMENT OF ENERGY
NEVADA OPERATIONS OFFICE — LAS VEGAS, NEVADA

DESIGNED: MCS	DRAWN: PALAGI
CHECKED: [illegible]	
SAFETY: NA	QA: [illegible]
PROJECT ENGINEER: [illegible]	

NEVADA NUCLEAR WASTE STORAGE INVESTIGATION
EXPLORATORY SHAFT FACILITY
LIFE SAFETY - OPERATIONS CONTROL
BLOCK DIAGRAM

SUBMITTED: [illegible] HOLMES & NARVER INC. — ISSUED — AGENCY APPROVAL — DOE ACCEPTANCE — DATE 12-15-89

HOLMES & NARVER INC.
ARCHITECTS-ENGINEERS
ENERGY SUPPORT DIVISION
1050 E. FLAMINGO ROAD LAS VEGAS, NEVADA 89119

I.D. NO. 500238 V004548-3
USE NO. 1.2.6.7.1.8

DRAWING NUMBER JS-025-ESF-FP5
SHEET 1 OF 1

GENERAL NOTES:

1. THIS TITLE I DRAWING DEPICTS ONLY THE MAJOR DESIGN FEATURES OF THIS PROJECT. ALL DETAILS, EQUIPMENT DESCRIPTIONS AND SPECIAL INSTRUCTIONS SHALL BE DEVELOPED DURING TITLE II EFFORT.
2. FOR SYMBOLS AND ABBREVIATIONS SEE DRAWING JS-025-ESF-T3,T4 & T5
3. FOR DRAWING INDEX SEE DRAWING JS-025-ESF-T2.
4. QALA TBD
5. ALL FIRE ALARM CIRCUITS, EQUIPMENT AND DEVICES SHALL HAVE UL - LISTED COMPONENTS OR BE FM APPROVED.

KEYED NOTES:

(1) THE EXACT LOCATIONS OF ALL DATA ACQUISITION STATIONS [DAS] SHALL BE DETERMINED BY OTHERS.

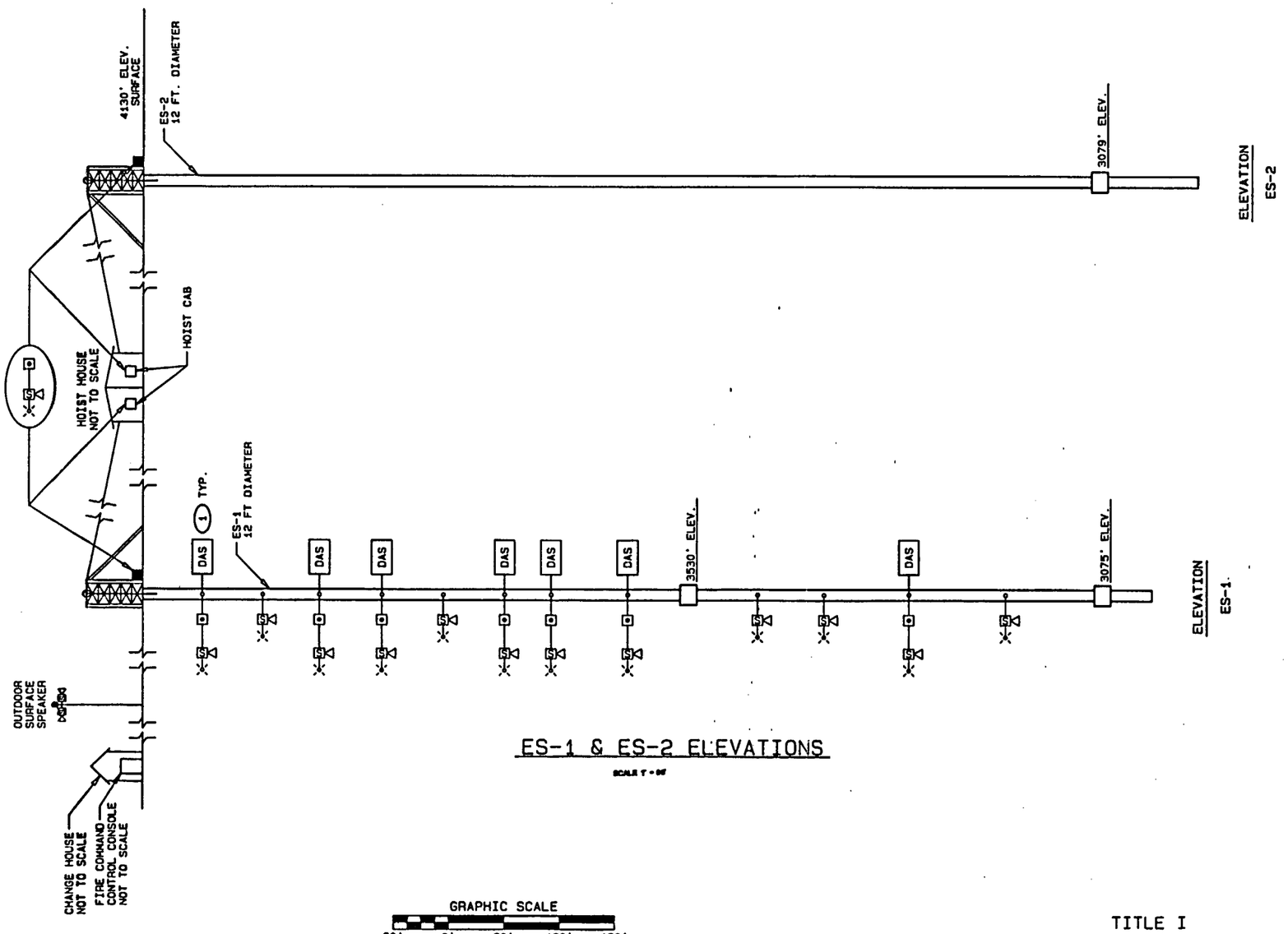

ES-1 & ES-2 ELEVATIONS

SCALE 1" = 60'

TITLE I

SI APERTURE CARD

Also Available On Aperture Card

8901040172-143

NO.	DATE	REVISIONS	BY	CK	ELE	QA	PE	AE	ADM	DOE

U.S. DEPARTMENT OF ENERGY
NEVADA OPERATIONS OFFICE — LAS VEGAS, NEVADA

DESIGNED: MCS	DRAWN: PALAGI
CHECKED:	
SAFETY: NA	
PROJECT ENGINEER:	
SUBMITTED: HOLMES & NARVER INC.	AGENCY APPROVAL
DOE ACCEPTANCE	DATE: 11-15-88

NEVADA NUCLEAR WASTE STORAGE INVESTIGATION
EXPLORATORY SHAFT FACILITY
LIFE SAFETY - ALARM WARNING SYSTEM
ES-1 & ES-2 ELEVATIONS

HOLMES & NARVER INC.
ARCHITECTS-ENGINEERS
ENERGY SUPPORT DIVISION
1050 E. FLAMINGO ROAD LAS VEGAS, NEVADA 89119

I.D. NO. 500238 V004545-2
WBS NO. 1.2.8.7.1.8

DRAWING NUMBER: JS-025-ESF-FP6
SHEET 1 OF 1

H G F E D C B A

12 11 10 9 8 7 6 5 4 3 2 1

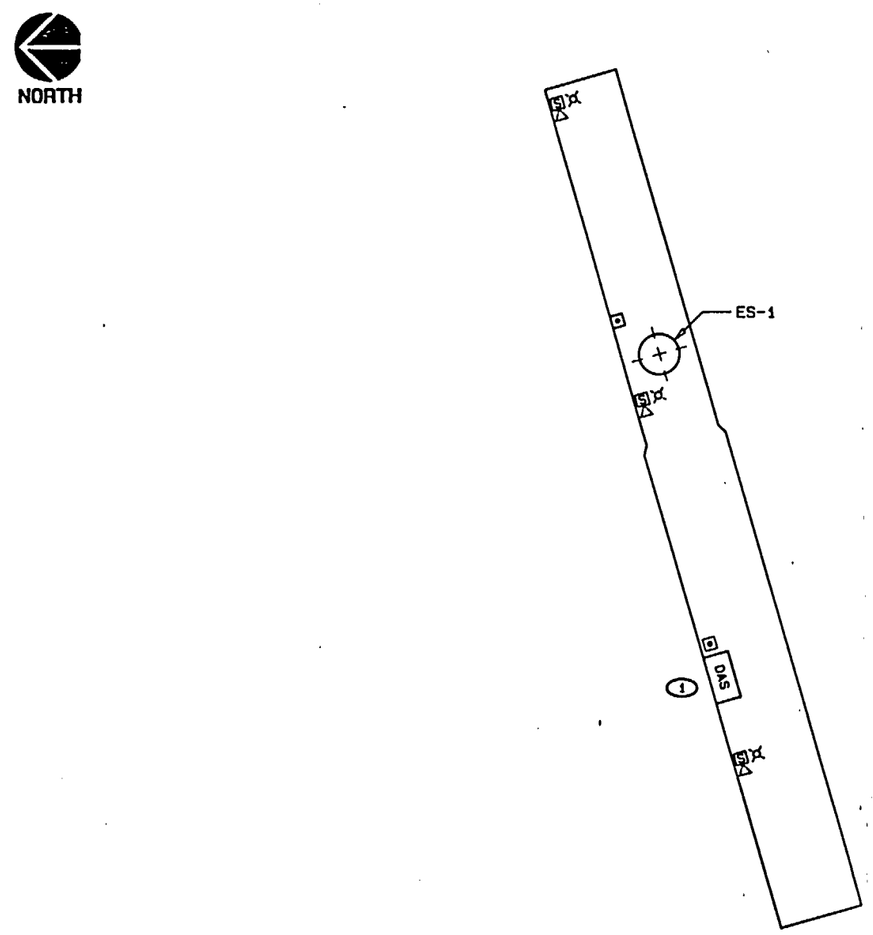

UPPER DEMONSTRATION BREAKOUT ROOM (UDBR) PLAN
ELEVATION = 3530'
SCALE 1" = 20'

GRAPHIC SCALE
20' 0' 20' 40' 60'
1" = 20'

TITLE I

GENERAL NOTES:

1. THIS TITLE I DRAWING DEPICTS ONLY THE MAJOR DESIGN FEATURES OF THIS PROJECT. ALL DETAILS, EQUIPMENT DESCRIPTIONS AND SPECIAL INSTRUCTIONS SHALL BE DEVELOPED DURING TITLE II EFFORT.
2. FOR SYMBOLS AND ABBREVIATIONS SEE DRAWING JS-025-ESF-T3.T4 & T5
3. FOR DRAWING INDEX SEE DRAWING JS-025-ESF-T2.
4. QALA TBD
5. ALL FIRE ALARM CIRCUITS, EQUIPMENT AND DEVICES SHALL HAVE UL - LISTED COMPONENTS OR BE FM APPROVED.

KEYED NOTES:

1. THE EXACT LOCATIONS OF ALL DATA ACQUISITION STATIONS DAS SHALL BE DETERMINED BY OTHERS.

SI
APERTURE
CARD

Also Available On
Aperture Card

8901040172-144

NO.	DATE	REVISIONS	BY / CK	EAP / GA	PE / AE	ASM / DOE

U.S. DEPARTMENT OF ENERGY
NEVADA OPERATIONS OFFICE — LAS VEGAS, NEVADA

DESIGNED: MCS — DRAWN: PALAGI
CHECKED:
SAFETY: NA — S/A: RS
PROJECT ENGINEER:
SUBMITTED: — APP'D: HOLMES & NARVER INC.

NEVADA NUCLEAR WASTE STORAGE INVESTIGATION
EXPLORATORY SHAFT FACILITY
LIFE SAFETY - ALARM WARNING SYSTEM

UDBR PLAN

AGENCY APPROVAL — DOE ACCEPTANCE — DATE: 12-15-88

HOLMES & NARVER INC.
ARCHITECTS-ENGINEERS
ENERGY SUPPORT DIVISION
1050 E. FLAMINGO ROAD LAS VEGAS, NEVADA 89119

I.D. NO. 500238 V004546-3
WBS NO. 1.2.6.7.1.2

DRAWING NUMBER: JS-025-ESF-FP7
SHEET 1 OF 1

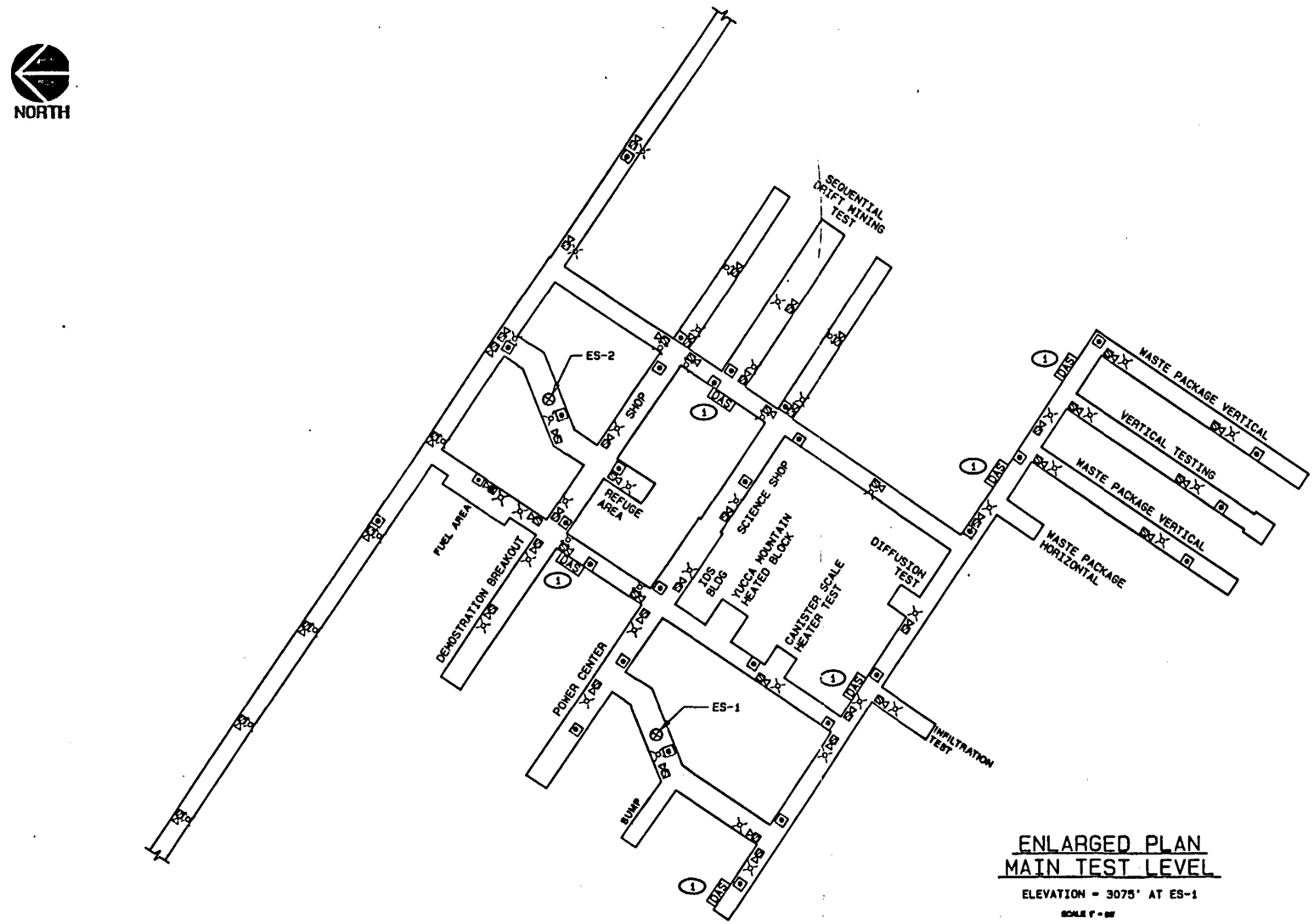

ENLARGED PLAN
MAIN TEST LEVEL

ELEVATION = 3075' AT ES-1

SCALE 1" = 50'

GRAPHIC SCALE

50' 0' 50' 100' 150'

1" = 50'

TITLE I

GENERAL NOTES:

1. THIS TITLE I DRAWING DEPICTS ONLY THE MAJOR DESIGN FEATURES OF THIS PROJECT. ALL DETAILS, EQUIPMENT DESCRIPTIONS, AND SPECIAL INSTRUCTIONS SHALL BE DEVELOPED DURING THE TITLE II EFFORT.
2. FOR SYMBOLS AND ABBREVIATIONS SEE DRAWING JS-025-ESF-T3,T4 & T5
3. FOR DRAWING INDEX SEE DRAWING JS-025-ESF-T2.
4. QALA TBD
5. ALL FIRE ALARM CIRCUITS, EQUIPMENT AND DEVICES SHALL HAVE UL - LISTED COMPONENTS OR BE FM APPROVED.

KEYED NOTES:

1. THE EXACT LOCATION OF ALL DATA ACQUISITION STATIONS DAS SHALL BE DETERMINED BY OTHERS.

SI APERTURE CARD

Also Available On Aperture Card

8901040172-145

NO.	DATE	REVISIONS	BY / CK	EAF / GA	PE / AE	ASH / DOE

U.S. DEPARTMENT OF ENERGY

NEVADA OPERATIONS OFFICE — LAS VEGAS, NEVADA

DESIGNED: MCS — DRAWN: MCCANTISH — CHECKED: — SAFETY: NA — SCALE: NTS — PROJECT ENGINEER

NEVADA NUCLEAR WASTE STORAGE INVESTIGATION
EXPLORATORY SHAFT FACILITY
LIFE SAFETY - ALARM WARNING SYSTEM

MAIN TEST LEVEL PLAN

SUBMITTED BY: HOLMES & NARVER INC. — AGENCY APPROVAL — DOE ACCEPTANCE — DATE 12-15-88

HOLMES & NARVER INC.
ARCHITECTS-ENGINEERS
ENERGY SUPPORT DIVISION
1000 E. FLAMINGO ROAD LAS VEGAS, NEVADA 89119

I.D. NO. 500238 V004536-2 — WBS NO. 1.2.0.7.1.2

DRAWING NUMBER JS-025-ESF-FP8

SHEET 1 OF 1

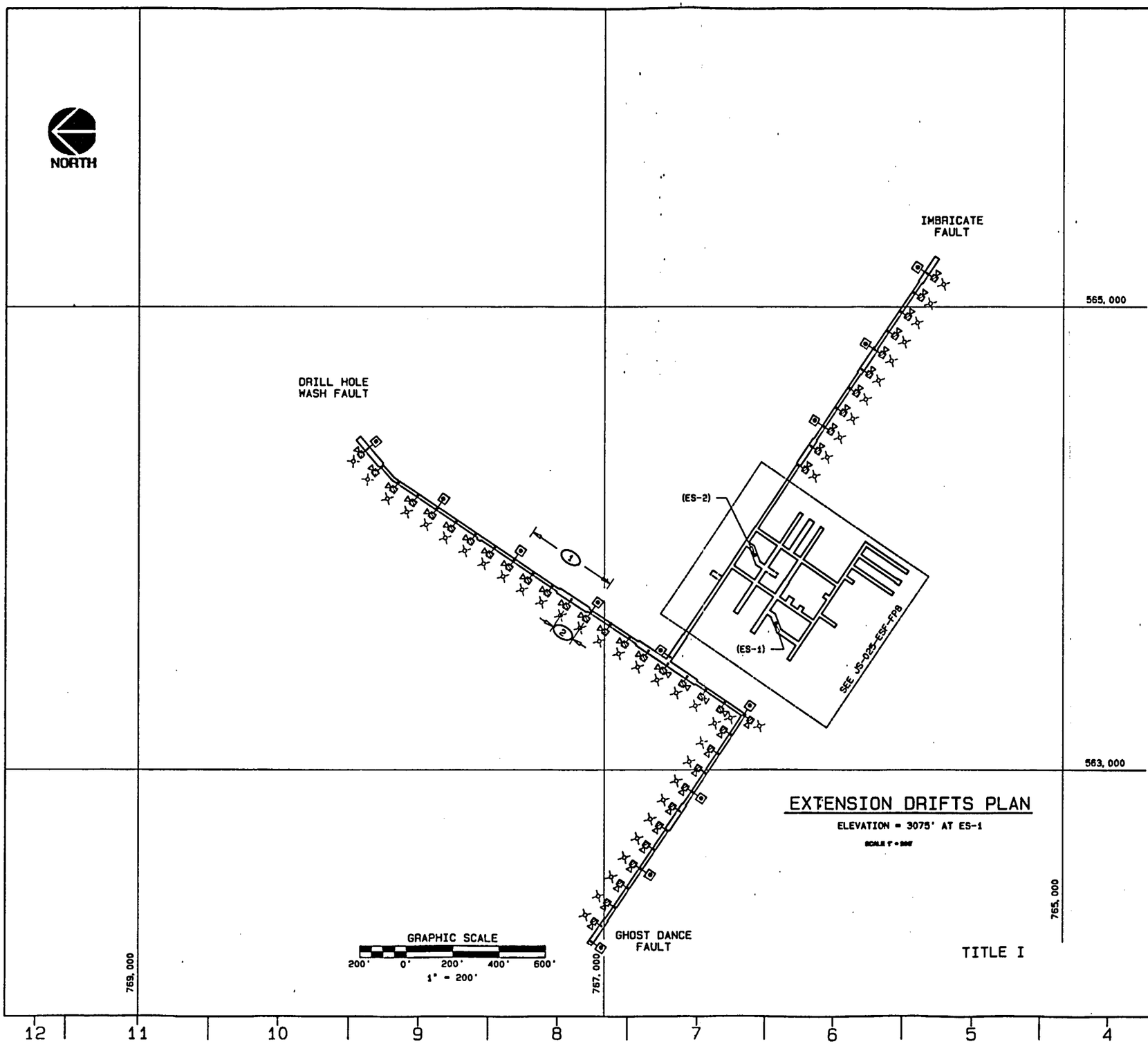

EXTENSION DRIFTS PLAN

ELEVATION = 3075' AT ES-1

SCALE 1" = 200'

GENERAL NOTES:

1. THIS TITLE I DRAWING DEPICTS ONLY THE MAJOR DESIGN FEATURES OF THIS PROJECT. ALL DETAILS, EQUIPMENT DESCRIPTIONS, AND SPECIAL INSTRUCTIONS SHALL BE DEVELOPED DURING THE TITLE II EFFORT.
2. FOR SYMBOLS AND ABBREVIATIONS SEE DRAWING JS-025-ESF-T3,T4 & T6
3. FOR DRAWING INDEX SEE DRAWING JS-025-ESF-T2.
4. QALA TBD
5. ALL FIRE ALARM CIRCUITS, EQUIPMENT AND DEVICES SHALL HAVE UL - LISTED COMPONENTS OR BE FM APPROVED.

KEYED NOTES:

1. TYPICAL SPACING FOR ALARM STATIONS IS 400 FT.
2. TYPICAL SPACING FOR SPEAKERS AND VISUAL INDICATORS IS 100 FT.

SI APERTURE CARD

Also Available On Aperture Card

8901040172-146

NO.	DATE	REVISIONS	BY / CK	SAF / SA	PE / AE	ASM / DOE

U.S. DEPARTMENT OF ENERGY

NEVADA OPERATIONS OFFICE — LAS VEGAS, NEVADA

DESIGNED: MCS — DRAWN: MCCANISH — CHECKED: — SAFETY: NA — PROJECT ENGINEER — SUBMITTED: HOLMES & NARVER INC. — AGENCY APPROVAL — DOE ACCEPTANCE — DATE: 12-15-88

NEVADA NUCLEAR WASTE STORAGE INVESTIGATION
EXPLORATORY SHAFT FACILITY
LIFE SAFETY - ALARM WARNING SYSTEM

EXTENSION DRIFTS PLAN

HOLMES & NARVER INC.
ARCHITECTS-ENGINEERS
ENERGY SUPPORT DIVISION
1000 E. FLAMINGO ROAD LAS VEGAS, NEVADA 89119

I.D. NO. 500238 V004539-2 — WBS NO. 1.2.8.7.1.2

DRAWING NUMBER: JS-025-ESF-FP9

SHEET 1 OF 1

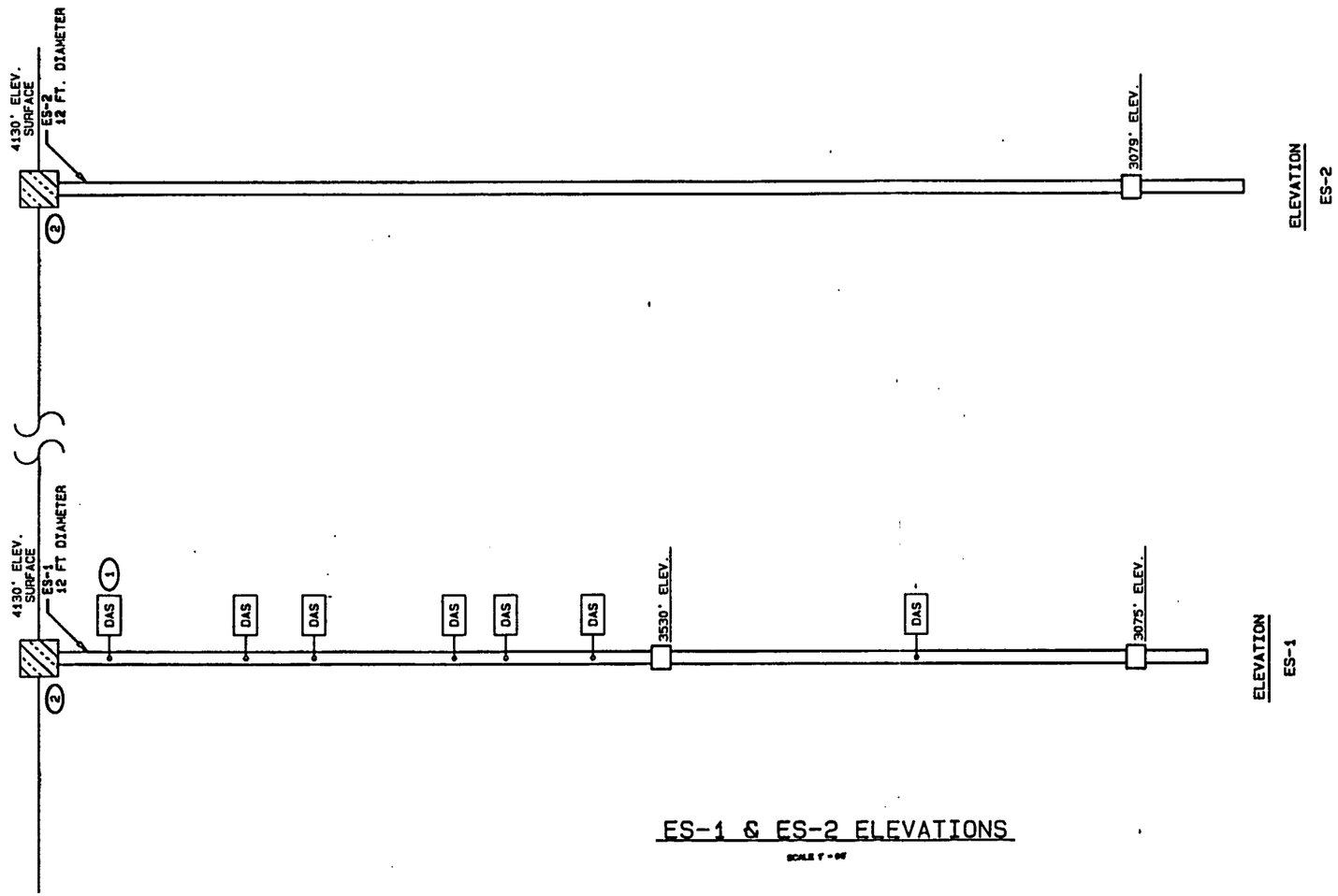

ES-1 & ES-2 ELEVATIONS

SCALE 1" = 60'

GRAPHIC SCALE

60' 0' 60' 120' 180'

1" = 60'

TITLE I

GENERAL NOTES:

1. THIS TITLE I DRAWING DEPICTS ONLY THE MAJOR DESIGN FEATURES OF THIS PROJECT. ALL DETAILS, EQUIPMENT DESCRIPTIONS, AND SPECIAL INSTRUCTIONS SHALL BE DEVELOPED DURING THE TITLE II EFFORT.
2. FOR SYMBOLS AND ABBREVIATIONS SEE DRAWING JS-025-ESF-T3.T4 & T5
3. FOR DRAWING INDEX SEE DRAWING JS-025-ESF-T2.
4. QALA TBD
5. ALL FIRE ALARM CIRCUITS, EQUIPMENT AND DEVICES SHALL HAVE UL - LISTED COMPONENTS OR BE FM APPROVED.

KEYED NOTES:

1. THE EXACT LOCATION OF ALL DATA ACQUISITION STATIONS DAS SHALL BE DETERMINED BY OTHERS.
2. AUTOMATIC SMOKE DETECTION PROVIDED AT SHAFT COLLARS.

SI APERTURE CARD

Also Available On Aperture Card

8901040172-147

NO.	DATE	REVISIONS	BY / CK	SAF / SA	PE / AE	ASN / DOE

U.S. DEPARTMENT OF ENERGY

NEVADA OPERATIONS OFFICE — LAS VEGAS, NEVADA

DESIGNED: DJK — DRAWN: MCCANISH — CHECKED: — SAFETY: NA — PROJECT ENGINEER: — SUBMITTED: HOLMES & NARVER INC. — AGENCY APPROVAL — DOE ACCEPTANCE — DATE: 12-15-88

NEVADA NUCLEAR WASTE STORAGE INVESTIGATION
EXPLORATORY SHAFT FACILITY
LIFE SAFETY - AUTOMATIC FIRE DETECTION

ES-1 & ES-2 ELEVATIONS

HOLMES & NARVER INC.
ARCHITECTS-ENGINEERS
ENERGY SUPPORT DIVISION
1000 E. FLAMINGO ROAD LAS VEGAS, NEVADA 89119

I.D. NO. 500238 V004535-3 — MSG NO. 1.2.8.7.1.2

DRAWING NUMBER: JS-025-ESF-FP10

SHEET 1 OF 1

NORTH

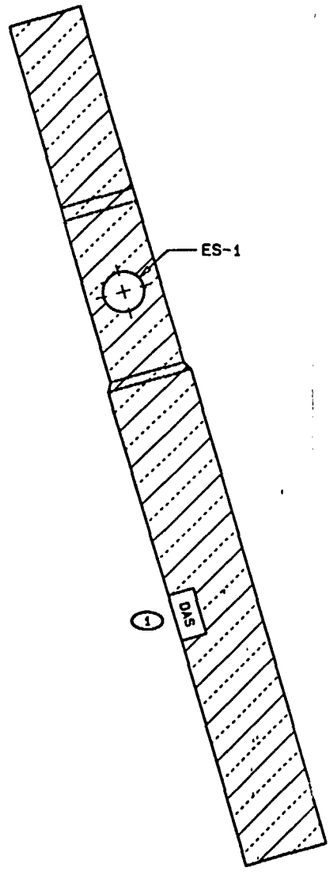

UPPER DEMONSTRATION BREAKOUT ROOM (UDBR) PLAN
ELEVATION = 3530'
SCALE 1" = 20'

GRAPHIC SCALE
20' 0' 20' 40' 60'
1" = 20'

TITLE I

GENERAL NOTES:

1. THIS TITLE I DRAWING DEPICTS ONLY THE MAJOR DESIGN FEATURES OF THIS PROJECT. ALL DETAILS, EQUIPMENT DESCRIPTIONS, AND SPECIAL INSTRUCTIONS SHALL BE DEVELOPED DURING THE TITLE II EFFORT.
2. FOR SYMBOLS AND ABBREVIATIONS SEE DRAWING JS-025-ESF-T3,T4 & T5
3. FOR DRAWING INDEX SEE DRAWING JS-025-ESF-T2.
4. QALA TBD
5. ALL FIRE ALARM CIRCUITS, EQUIPMENT AND DEVICES SHALL HAVE UL - LISTED COMPONENTS OR BE FM APPROVED.
6. MULTIPLE ZONE SMOKE DETECTION WILL BE PROVIDED FOR POST CONSTRUCTION USE.

KEYED NOTES:

(1) THE EXACT LOCATION OF ALL DATA ACQUISITION STATIONS [DAS] SHALL BE DETERMINED BY OTHERS.

SI
APERTURE
CARD

Also Available On
Aperture Card

890104017B-148

NO.	DATE	REVISIONS	BY CK	LAV SA	PE AE	ABV DOE

U.S. DEPARTMENT OF ENERGY
NEVADA OPERATIONS OFFICE — LAS VEGAS, NEVADA

NEVADA NUCLEAR WASTE STORAGE INVESTIGATION
EXPLORATORY SHAFT FACILITY
LIFE SAFETY - AUTOMATIC FIRE DETECTION
UDBR PLAN

DESIGNED: DJK | DRAWN: MCCAMISH | CHECKED: | SAFETY: N/A | PROJECT ENGINEER: KTS

SUBMITTED: HOLMES & NARVER, INC. | AGENCY APPROVAL | DOE ACCEPTANCE | DATE: 12-15-88

HOLMES & NARVER INC.
ARCHITECTS-ENGINEERS
ENERGY SUPPORT DIVISION
1050 E. FLAMINGO ROAD LAS VEGAS, NEVADA 89119

I.D. NO. 500238 V004537-2
WBS NO. 1.2.6.7.1.2

DRAWING NUMBER: JS-025-ESF-FP11
SHEET 1 OF 1

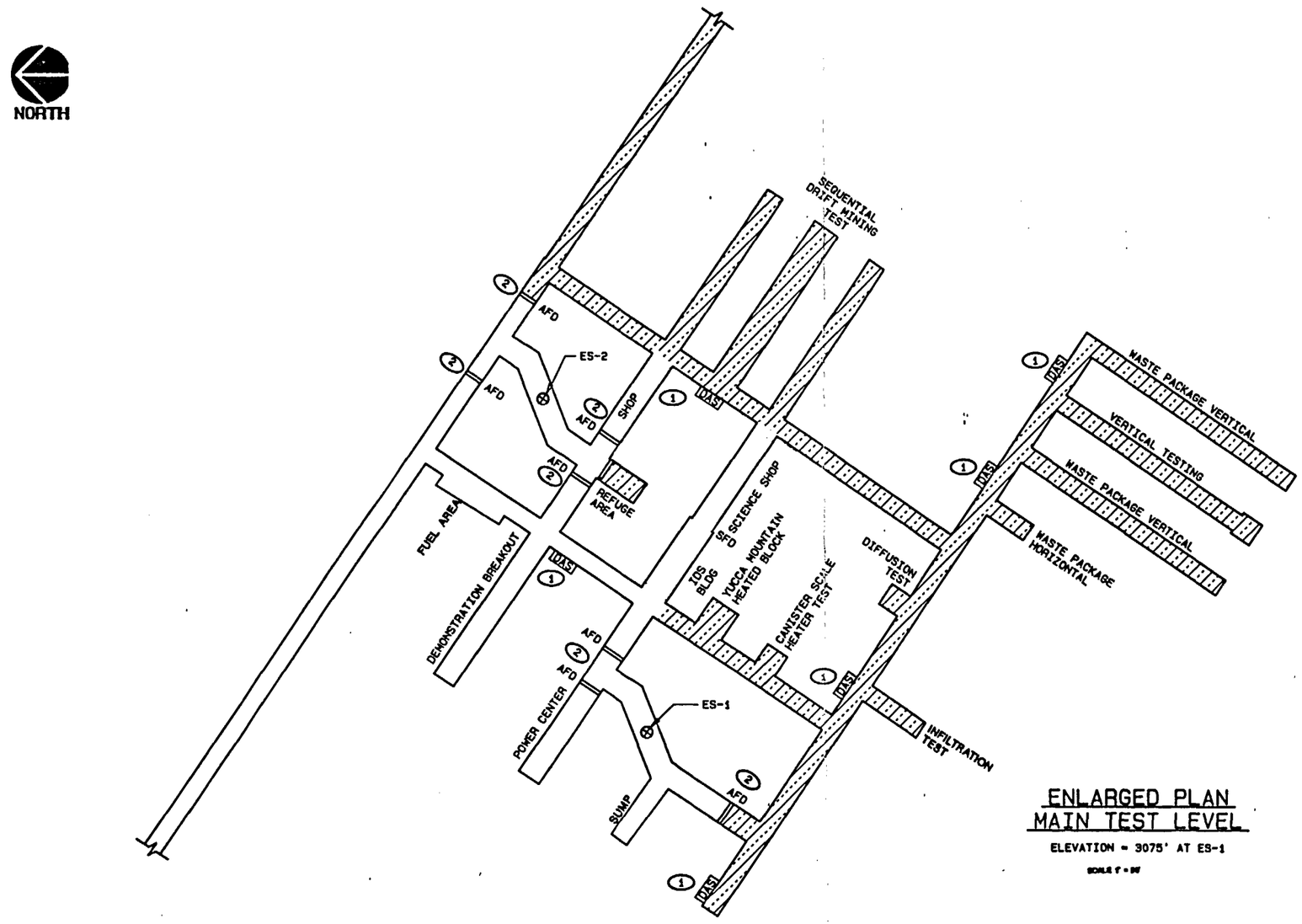

ENLARGED PLAN
MAIN TEST LEVEL

ELEVATION = 3075' AT ES-1

SCALE 1" = 50'

GENERAL NOTES:

1. THIS TITLE I DRAWING DEPICTS ONLY THE MAJOR DESIGN FEATURES OF THIS PROJECT. ALL DETAILS, EQUIPMENT DESCRIPTIONS, AND SPECIAL INSTRUCTIONS SHALL BE DEVELOPED DURING THE TITLE II EFFORT.
2. FOR SYMBOLS AND ABBREVIATIONS SEE DRAWING JS-025-ESF-T3,T4 & T6
3. FOR DRAWING INDEX SEE DRAWING JS-025-ESF-T2.
4. QALA TBD
5. ALL FIRE ALARM CIRCUITS, EQUIPMENT AND DEVICES SHALL HAVE UL - LISTED COMPONENTS OR BE FM APPROVED.
6. AUTOMATIC SMOKE DETECTION WILL BE PROVIDED IN ALL AREAS NOT COVERED BY WATER SPRINKLER SYSTEM.
7. MULTIPLE ZONE SMOKE DETECTION WILL BE PROVIDED FOR POST CONSTRUCTION USE.

KEYED NOTES:

1. THE EXACT LOCATION OF ALL DATA ACQUISITION STATIONS DAS SHALL BE DETERMINED BY OTHERS.
2. THE EXACT LOCATION OF ALL FIRE DOORS SHALL BE DETERMINED BY OTHERS.

SI
APERTURE
CARD

Also Available On
Aperture Card

8901040172-149

TITLE I

NO.	DATE	REVISIONS	BY CK	SAF SA	PE AE	ASH DOE

U.S. DEPARTMENT OF ENERGY
NEVADA OPERATIONS OFFICE — LAS VEGAS, NEVADA

DESIGNED: DJK — DRAWN: MCCANISH
CHECKED:
SAFETY: NA — RPS
PROJECT ENGINEER
SUBMITTED: HOLMES & NARVER INC.

NEVADA NUCLEAR WASTE STORAGE INVESTIGATION
EXPLORATORY SHAFT FACILITY
LIFE SAFETY - AUTOMATIC FIRE DETECTION

MAIN TEST LEVEL PLAN

AGENCY APPROVAL — DOE ACCEPTANCE — DATE: 12-15-88

HOLMES & NARVER INC.
ARCHITECTS-ENGINEERS
ENERGY SUPPORT DIVISION
1000 E. PLANTING ROAD LAS VEGAS, NEVADA 89119

I.D. NO. 500238 V004538-2
WBS NO. 1.2.8.7.1.2

DRAWING NUMBER JS-025-ESF-FP12
SHEET 1 OF 1

NORTH

IMBRICATE FAULT

565,000

DRILL HOLE WASH FAULT

(ES-2)

(ES-1)

SEE JS-025-ESF-FP12

563,000

765,000

759,000

757,000

GHOST DANCE FAULT

GRAPHIC SCALE

200' 0' 200' 400' 600'

1" = 200'

EXTENSION DRIFTS PLAN

ELEVATION = 3075' AT ES-1

SCALE 1"=200'

TITLE I

GENERAL NOTES:

1. THIS TITLE I DRAWING DEPICTS ONLY THE MAJOR DESIGN FEATURES OF THIS PROJECT. ALL DETAILS, EQUIPMENT DESCRIPTIONS, AND SPECIAL INSTRUCTIONS SHALL BE DEVELOPED DURING THE TITLE II EFFORT.
2. FOR SYMBOLS AND ABBREVIATIONS SEE DRAWING JS-025-ESF-T3, T4 & T5
3. FOR DRAWING INDEX SEE DRAWING JS-025-ESF-T2.
4. QALA TBD
5. ALL FIRE ALARM CIRCUITS, EQUIPMENT AND DEVICES SHALL HAVE UL - LISTED COMPONENTS OR BE FM APPROVED.
6. MULTIPLE ZONE SMOKE DETECTION WILL BE PROVIDED FOR POST CONSTRUCTION USE.

SI APERTURE CARD

Also Available On Aperture Card

8901040172-150

NO.	DATE	REVISIONS	BY	CK	EJU	QA	PE	AE	ADM	DOE

U.S. DEPARTMENT OF ENERGY

NEVADA OPERATIONS OFFICE — LAS VEGAS, NEVADA

DESIGNED: DJK — DRAWN: MCCAMISH — CHECKED: — SAFETY: NA — PROJECT ENGINEER: — SUBMITTED: HOLMES & NARVER INC. — AGENCY APPROVAL: — DOE ACCEPTANCE: — DATE: 12-15-88

NEVADA NUCLEAR WASTE STORAGE INVESTIGATION
EXPLORATORY SHAFT FACILITY
LIFE SAFETY - AUTOMATIC FIRE DETECTION

EXTENSION DRIFTS PLAN

HOLMES & NARVER INC.
ARCHITECTS-ENGINEERS
ENERGY SUPPORT DIVISION
1000 E. FLAMINGO ROAD LAS VEGAS, NEVADA 89119

I.D. NO. 500236 V004540-2
WBS NO. 1.2.0.7.1.2

DRAWING NUMBER JS-025-ESF-FP13

SHEET 1 OF 1

12 11 10 9 8 7 6 5 4 3 2 1

H G F E D C B A

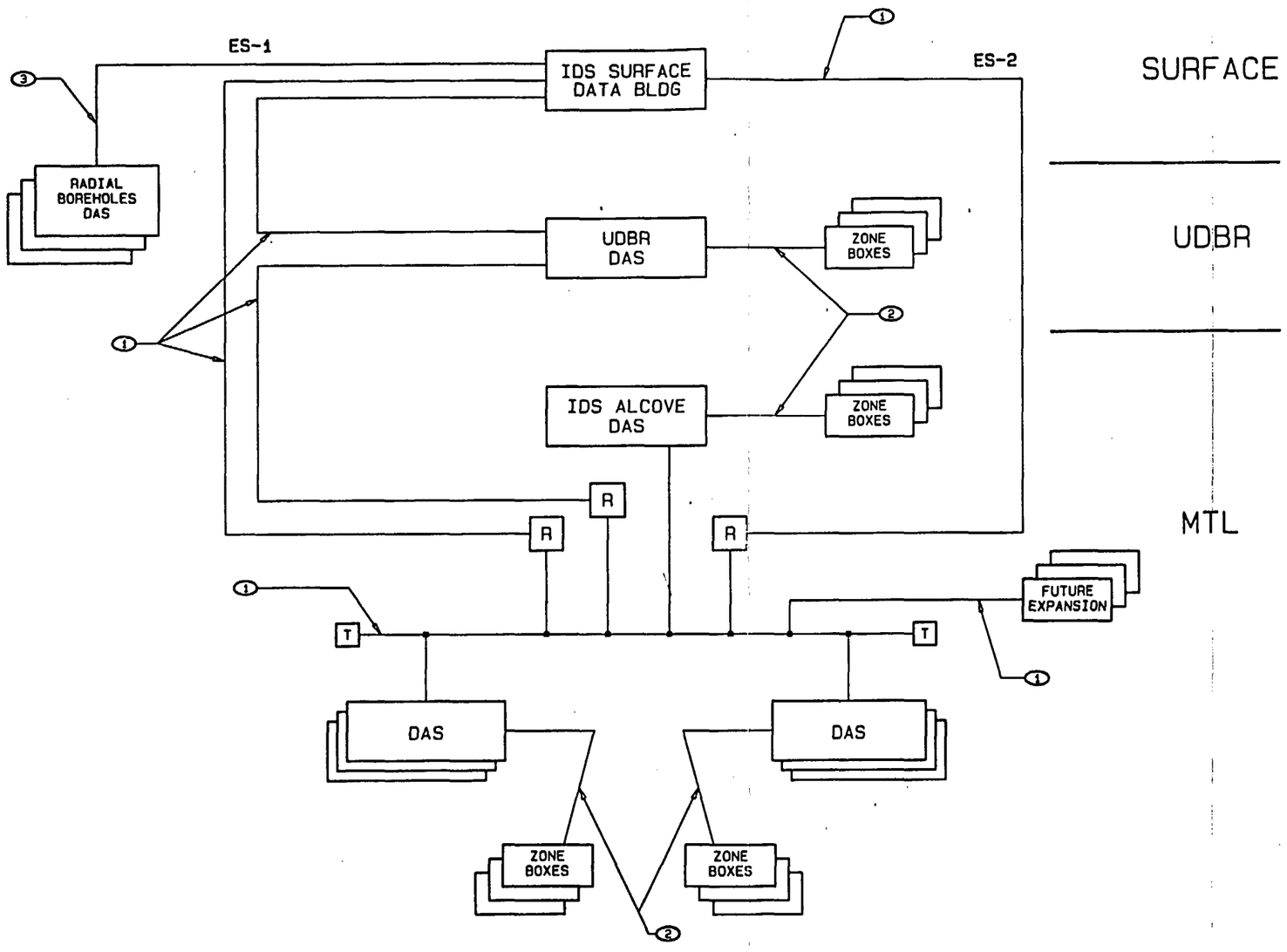

SIMPLIFIED BLOCK DIAGRAM

GENERAL NOTES

1. THIS TITLE I DRAWING DEPICTS ONLY THE MAJOR DESIGN FEATURES OF THIS PROJECT. ALL DETAILS, EQUIPMENT DESCRIPTIONS AND SPECIAL INSTRUCTIONS SHALL BE DEVLOPED DURING TITLE II EFFORT.
2. FOR SYMBOLS AND ABBREVIATIONS SEE DRAWING JS-025-ESF-T4,T5 AND T6.
3. FOR DRAWING INDEX SEE DRAWING JS-025-ESF-T2.
4. FOR QUALITY ASSURANCE LEVEL ASSIGNMENT SEE QALA NO. 6.7.1-0001, 6.7.1-0005, 6.7.1-0007.

SI APERTURE CARD

Also Available On Aperture Card

KEYED NOTES:

1. THESE CABLES ARE FOR ETHERNETS A, B, AND C AND IRIG-B #1 AND #2. THE CABLES IN ES-2 ARE REDUNDANT AND ARE TO BE CONNECTED AS NEEDED.
2. THESE CABLES ARE TO BE "ZONE BOX MULTI-PAIR".
3. THESE CABLES ARE TO BE FOR "RADIAL BORE HOLE NETWORK".

REFERENCE DRAWINGS

FACILITY DIAGRAM----------W2
TYP. INSTALLATION DETAILS----------W3

8901040172-151

TITLE I

NO.	DATE	REVISIONS	BY / CK	EAF / GA	PE / AE	ASM / DOE

U.S. DEPARTMENT OF ENERGY
NEVADA OPERATIONS OFFICE — LAS VEGAS, NEVADA

DESIGNED: GEBS — DRAWN: SM
CHECKED:
SAFETY: NA — G.A.
PROJECT ENGINEER
SUBMITTED: HOLMES & NARVER INC.
AGENCY APPROVAL
DOE ACCEPTANCE
DATE: 12-15-88

NEVADA NUCLEAR WASTE STORAGE INVESTIGATION
EXPLORATORY SHAFT FACILITY
INTEGRATED DATA SYSTEM CABLE PLANT

SIMPLIFIED BLOCK DIAGRAM

HOLMES & NARVER INC.
ARCHITECTS-ENGINEERS
ENERGY SUPPORT DIVISION
1000 E. FLAMINGO ROAD LAS VEGAS, NEVADA 89109

I.D. NO. 90023E V004412-10
WBS NO. 1.2.6.8.3

DRAWING NUMBER: JS-025-ESF-W1
SHEET 1 OF 1

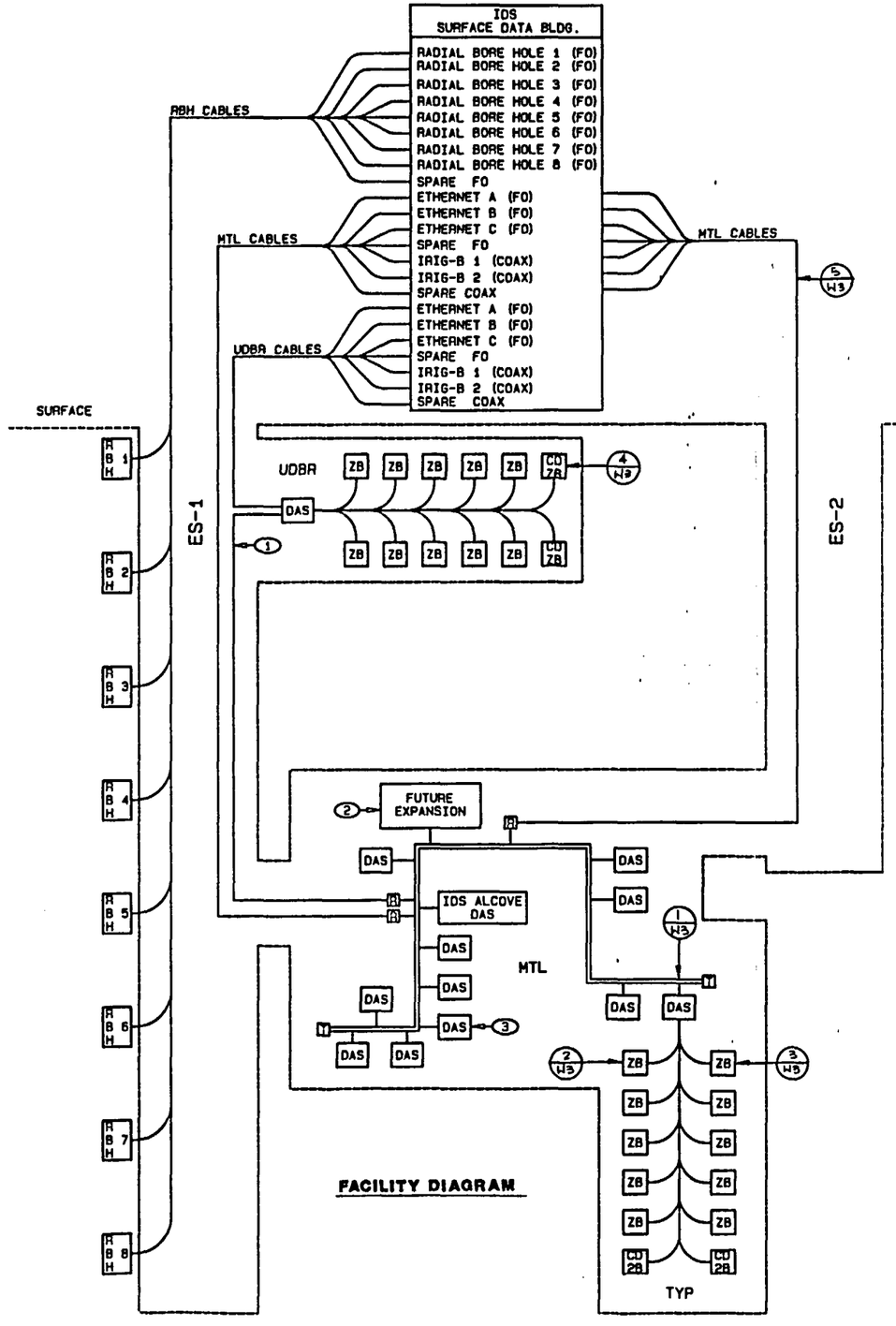

TITLE I

GENERAL NOTES

1. THIS TITLE I DRAWING DEPICTS ONLY THE MAJOR DESIGN FEATURES OF THIS PROJECT. ALL DETAILS, EQUIPMENT DESCRIPTIONS AND SPECIAL INSTRUCTIONS SHALL BE DEVLOPED DURING TITLE II EFFORT.
2. FOR SYMBOLS AND ABBREVIATIONS SEE DRAWING JS-025-ESF-T4,T5 AND T6.
3. FOR DRAWING INDEX SEE DRAWING JS-025-ESF-T2.
4. FOR QUALITY ASSURANCE LEVEL ASSIGNMENT SEE QALA NO. 6.7.1-0001, 6.7.1-0005, 6.7.1-0007.

SI
APERTURE
CARD

Also Available On
Aperture Card

KEYED NOTES:

(1) CABLES TO CONSIST OF:
ETHERNET A (FO)
ETHERNET B (FO)
ETHERNET C (FO)
SPARE FO
IRIG-B 1 (COAX)
IRIG-B 2 (COAX)
SPARE COAX

(2) TAPS FOR EXPANSION MAY BE ADDED AND LOCATED AS NECCESSARY.

(3) DATA ACQUISTION STATIONS MAY BE ADDED AND LOCATED AS NECESSARY ALONG THE MTL DISTRIBUTION NETWORK.

REFERENCE DRAWINGS

SIMPLIFIED BLOCK DIAGRAM ---------- W1
TYP. INSTALLATION DETAILS ---------- W3

890.1040172-152

NO.	DATE	REVISIONS	BY/CM	CK/GA	PE/AE	LDV/DOE

U.S. DEPARTMENT OF ENERGY
NEVADA OPERATIONS OFFICE — LAS VEGAS, NEVADA

DESIGNED: GEBS | DRAWN: BM
CHECKED:
SAFETY: NA | R.A.
PROJECT ENGINEER

NEVADA NUCLEAR WASTE STORAGE INVESTIGATION
EXPLORATORY SHAFT FACILITY
INTEGRATED DATA SYSTEM CABLE PLANT

FACILITY DIAGRAM

SUBMITTED BY: HOLMES & NARVER, INC. — 11/10/93
AGENCY APPROVAL
DOE ACCEPTANCE — DATE: 12-15-93

HOLMES & NARVER INC.
ARCHITECTS-ENGINEERS
ENERGY SUPPORT DIVISION
1000 E. PLANTING ROAD LAS VEGAS, NEVADA 89109

I.D. NO. 80023E V0044423-0
HNF NO. 6.8.0.0.0
DRAWING NUMBER JS-025-ESF-W2
SHEET ___ OF ___

11 10 9 8 7 6 5 4 3 2 1
H G F E D C B A

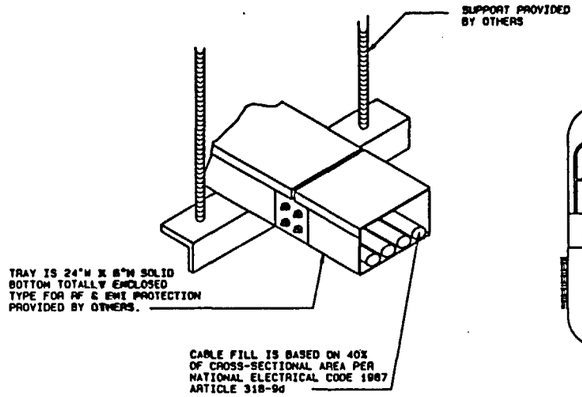

DETAIL (1)

CABLE TRAY (TO SUPPORT MAIN TEST LEVEL DISTRIBUTION NETWORK) PROVIDED BY OTHERS.

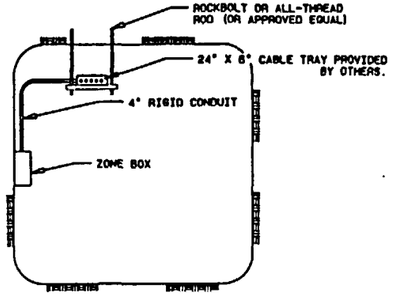

DETAIL (2)

ZONE BOX INSTALLATION

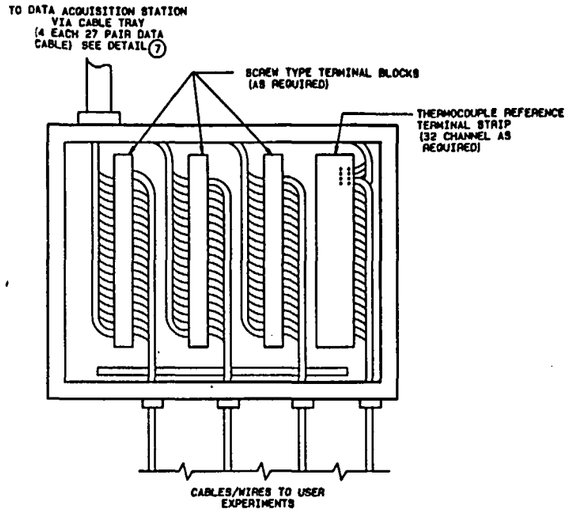

DETAIL (3)

ZONE BOX, 100 PAIR (1)
(10 PER DATA ACQUISITION STATION)

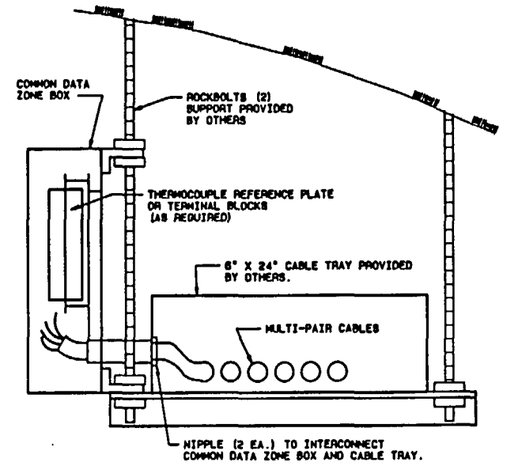

DETAIL (4)

COMMON DATA ZONE BOX, 25 PAIR (1)
(2 PER DATA ACQUISITION STATION)

SI APERTURE CARD

Also Available On Aperture Card

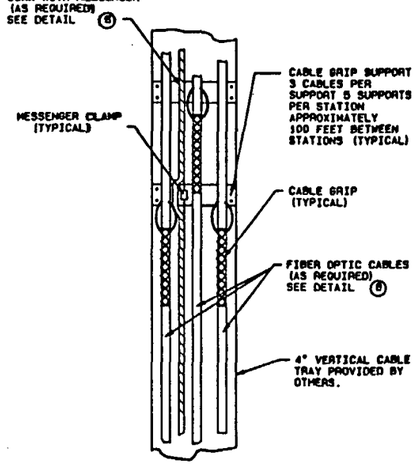

DETAIL (5)

VERTICAL CABLE SUPPORT STATION

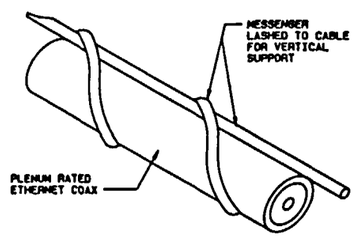

DETAIL (6)

COAX WITH MESSENGER

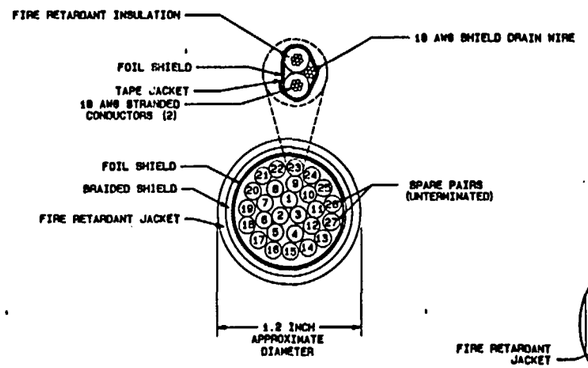

DETAIL (7)

27 PAIR DATA CABLE

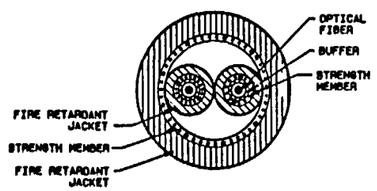

DETAIL (8)

INTEGRATED DATA SYSTEM FIBER OPTIC CABLE

DETAILS NOT TO SCALE

TITLE I

GENERAL NOTES

1. THIS TITLE I DRAWING DEPICTS ONLY THE MAJOR DESIGN FEATURES OF THIS PROJECT. ALL DETAILS, EQUIPMENT DESCRIPTIONS AND SPECIAL INSTRUCTIONS SHALL BE DEVLOPED DURING TITLE II EFFORT.
2. FOR SYMBOLS AND ABBREVIATIONS SEE DRAWING JS-025-ESF-T4, T5 AND T6.
3. FOR DRAWING INDEX SEE DRAWING JS-025-ESF-T2.
4. FOR QUALITY ASSURANCE LEVEL ASSIGNMENT SEE QALA NO. 6.7.1-0001, 6.7.1-0005, 6.7.1-0007.

KEYED NOTE:

(1) 100 AND 25 PAIR REFER TO TERMINATED PAIRS OF 27 PAIR CABLE.

REFERENCE DRAWINGS

SIMPLIFIED BLOCK DIAGRAM ---------- W1
FACILITY DIAGRAM ---------- W2

890.1040172 - 153

NO.	DATE	REVISIONS	BY	CK	BY	QA	PE	AE	LEAD DOE

U.S. DEPARTMENT OF ENERGY
NEVADA OPERATIONS OFFICE — LAS VEGAS, NEVADA

DESIGNED: GEBS | DRAWN: SM
CHECKED:
SAFETY: NA
PROJECT ENGINEER:

NEVADA NUCLEAR WASTE STORAGE INVESTIGATION
EXPLORATORY SHAFT FACILITY
INTEGRATED DATA SYSTEM CABLE PLANT
TYPICAL INSTALLATION DETAILS

SUBMITTED: HOLMES & NARVER INC. — AGENCY APPROVAL — DOE ACCEPTANCE — DATE: 12-15-93

HOLMES & NARVER INC.
ARCHITECTS-ENGINEERS
ENERGY SUPPORT DIVISION
1999 E. FLAMINGO ROAD LAS VEGAS, NEVADA 89119

I.D. NO. D0027K V004478-8
USE NO. 1.0.0.0.0
DRAWING NUMBER JS-025-ESF-W3
SHEET 1 OF 1

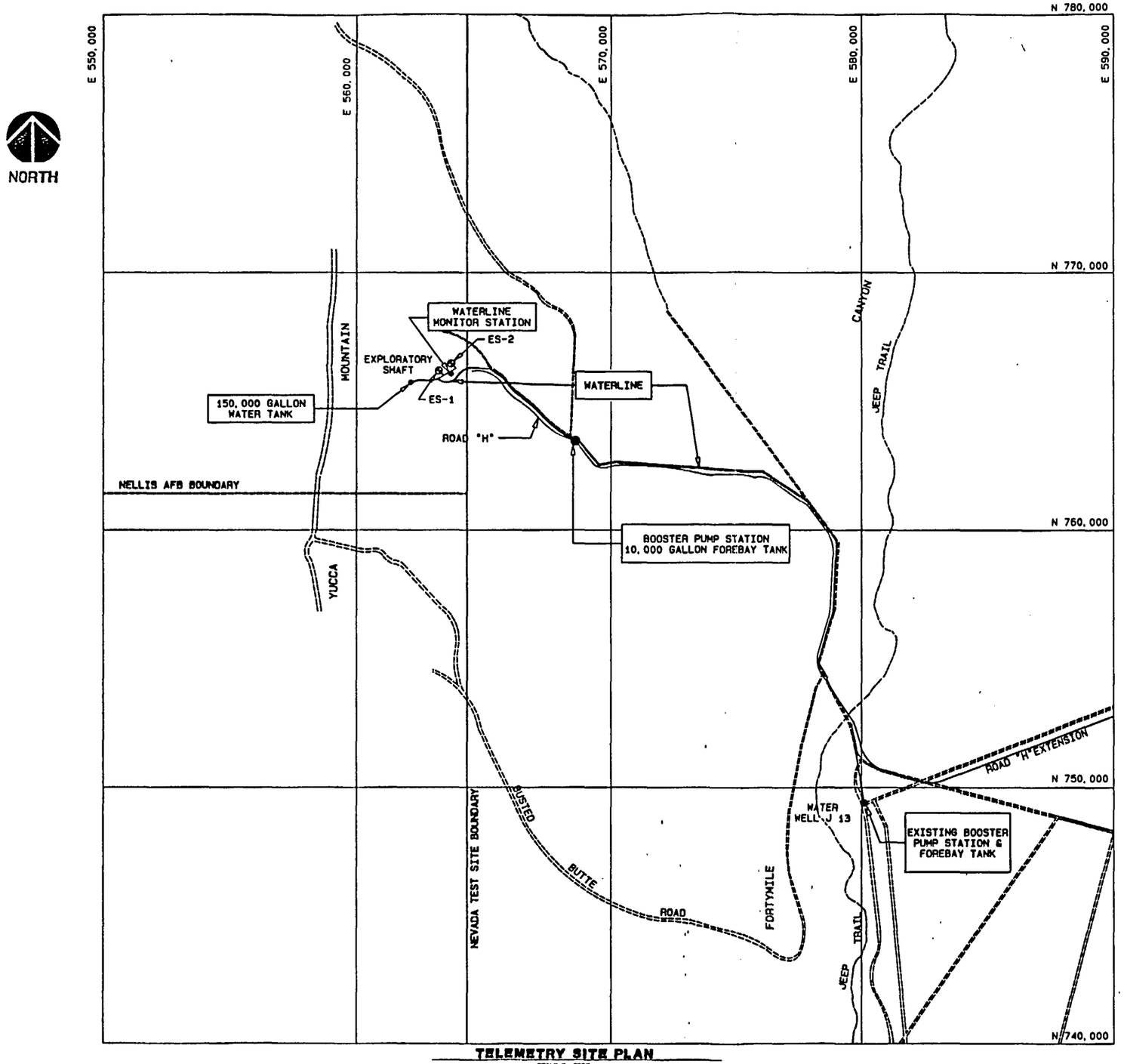

TELEMETRY SITE PLAN

SCALE 1" = 2000'

GENERAL NOTES:

1. THIS TITLE I DRAWING DEPICTS ONLY THE MAJOR DESIGN FEATURES OF THIS PROJECT. ALL DETAILS, EQUIPMENT DESCRIPTIONS, AND SPECIAL INSTRUCTIONS SHALL BE DEVELOPED DURING THE TITLE II EFFORT.
2. FOR SYMBOLS AND ABBREVIATIONS SEE DRAWING JS-025-ESF-T4,T9 AND T5.
3. FOR DRAWING INDEX SEE DRAWING JS-025-ESF-T2.
4. FOR QUALITY ASSURANCE LEVEL ASSIGNMENT SEE QALAS NO. 6.2.2-0006.

SI APERTURE CARD

Also Available On Aperture Card

GRAPHIC SCALE

0 5,000 10,000 FEET

1 : 2000 FT

8901040172-154

NO.	DATE	REVISIONS	BY / CK	SAF / GA	PE / AE	ASM / DOE

U.S. DEPARTMENT OF ENERGY

NEVADA OPERATIONS OFFICE — LAS VEGAS, NEVADA

DESIGNED: MOORE — DRAWN: SHYFACE

CHECKED:

SAFETY: NA — Q.A.

PROJECT ENGINEER

SUBMITTED: HOLMES & NARVER INC.

AGENCY APPROVAL

DOE ACCEPTANCE — DATE: 12-15-92

HOLMES & NARVER INC.
ARCHITECTS-ENGINEERS
ENERGY SUPPORT DIVISION
1000 E. PLANINGO ROAD LAS VEGAS, NEVADA 89119

I.D. NO. 50021E V004277-5

WBS NO. 1.2.8.2.2.5

DRAWING NUMBER JS-025-ESF-W4

SHEET 1 OF 1

TITLE I

GENERAL NOTES:

1. THIS TITLE I DRAWING DEPICTS ONLY THE MAJOR DESIGN FEATURES OF THIS PROJECT. ALL DETAILS, EQUIPMENT DESCRIPTIONS, AND SPECIAL INSTRUCTIONS SHALL BE DEVELOPED DURING THE TITLE II EFFORT.
2. FOR SYMBOLS AND ABBREVIATIONS SEE DRAWING JS-025-ESF-T4, T5 AND T6.
3. FOR DRAWING INDEX SEE DRAWING JS-025-ESF-T2.
4. FOR QUALITY ASSURANCE LEVEL ASSIGNMENT SEE QALAS NO. 6.2.2-0008.

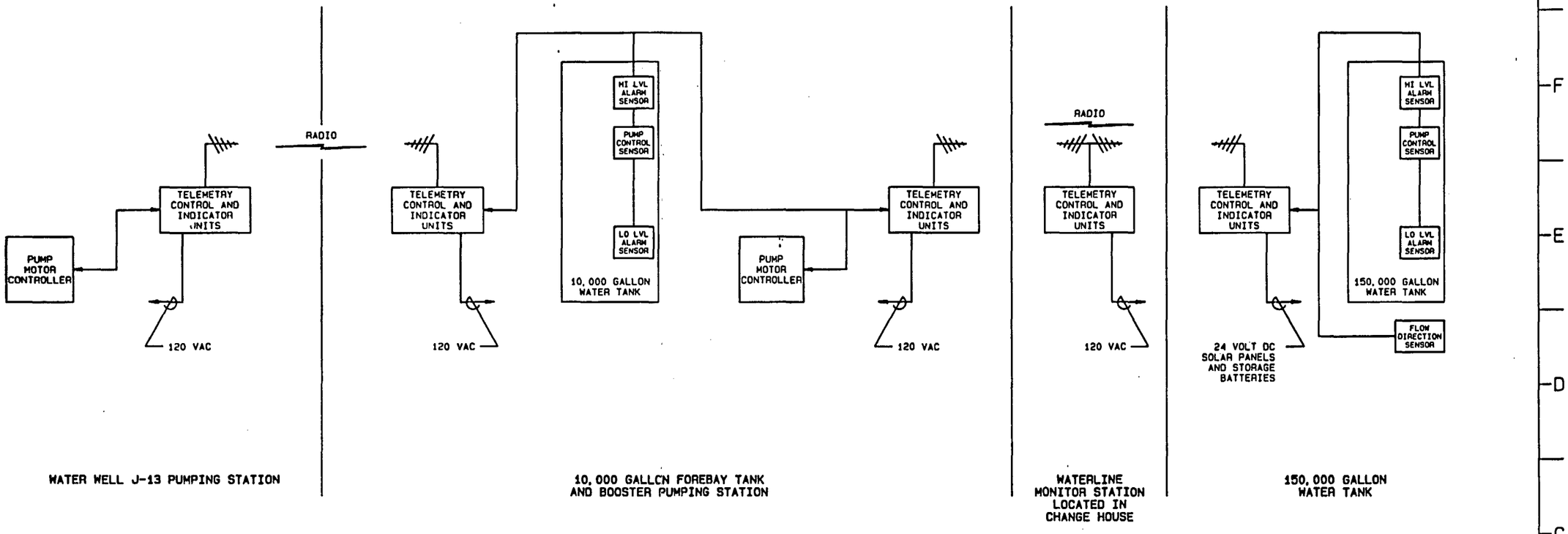

TELEMETRY BLOCK DIAGRAM

8901040172-155

SI APERTURE CARD

Also Available On Aperture Card

TITLE I

NO.	DATE	REVISIONS	BY	CK	LD	BA	PE	AE	ASM	DOE

U.S. DEPARTMENT OF ENERGY

NEVADA OPERATIONS OFFICE — LAS VEGAS, NEVADA

DESIGNED: DRAWN: SHYFACE
CHECKED: MOORE
SAFETY: NA
PROJECT ENGINEER:
SUBMITTED: HOLMES & NARVER INC.
AGENCY APPROVAL:
DOE ACCEPTANCE:
DATE: 12-15-88

NEVADA NUCLEAR WASTE STORAGE INVESTIGATION
EXPLORATORY SHAFT FACILITY
WATER SYSTEM

TELEMETRY BLOCK DIAGRAM

HOLMES & NARVER INC.
ARCHITECTS-ENGINEERS
ENERGY SUPPORT DIVISION
1000 E. FLAMINGO ROAD LAS VEGAS, NEVADA 89119

I.D. NO. 50021E V004280-5
USE NO.

DRAWING NUMBER: JS-025-ESF-W5
SHEET 1 OF 1

GENERAL NOTES:

1. THIS TITLE I DRAWING DEPICTS ONLY THE MAJOR DESIGN FEATURES OF THIS PROJECT. ALL DETAILS, EQUIPMENT DESCRIPTIONS AND SPECIAL INSTRUCTIONS SHALL BE DEVELOPED DURING TITLE II EFFORT.
2. FOR SYMBOLS AND ABBREVIATIONS SEE DRAWING JS-025-ESF-T4, T3 AND T5.
3. FOR DRAWING INDEX SEE DRAWING JS-025-ESF-T2.
4. FOR QUALITY ASSURANCE LEVEL ASSIGNMENT SEE QALAS NO. 6.2.2-0006 & 6.7.1-0004.

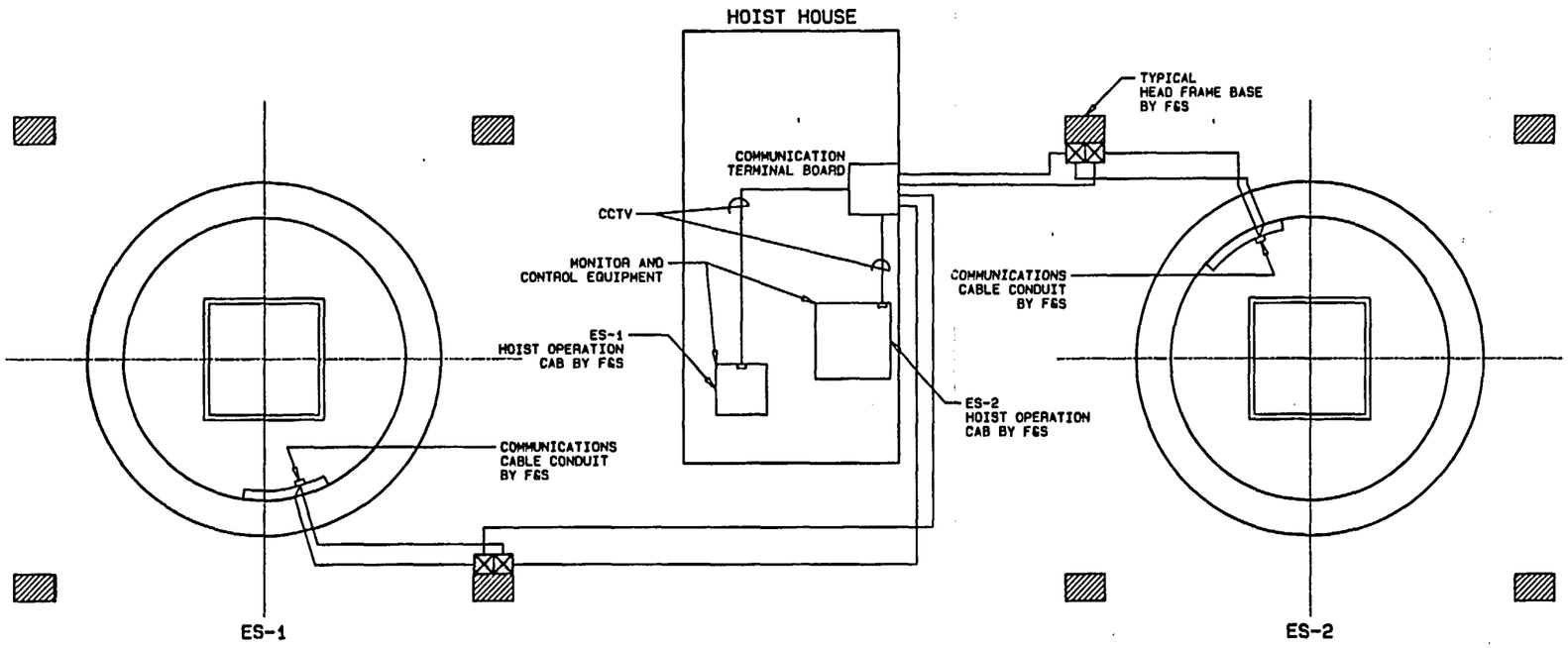

BLOCK DIAGRAM

REFERENCE DRAWINGS

CCTV BLOCK DIAGRAM----------W7
CCTV EQUIPMENT LAYOUT----------W8

SI APERTURE CARD

Also Available On Aperture Card

8901040172-156

TITLE I

NO.	DATE	REVISIONS	BY / CK	EAF / GA	PE / AE	ASH / DOE

U.S. DEPARTMENT OF ENERGY
NEVADA OPERATIONS OFFICE — LAS VEGAS, NEVADA

DESIGNED: BAILEY — DRAWN: PALAGI
CHECKED:
SAFETY: NA
PROJECT ENGINEER

NEVADA NUCLEAR WASTE STORAGE INVESTIGATION
EXPLORATORY SHAFT FACILITY
CCTV SURFACE

BLOCK DIAGRAM

SUBMITTED: HOLMES & NARVER INC. — AGENCY APPROVAL — DOE ACCEPTANCE — DATE: 12-15-88

HOLMES & NARVER INC.
ARCHITECTS-ENGINEERS
ENERGY SUPPORT DIVISION
1000 E. FLAMINGO ROAD LAS VEGAS, NEVADA 89119

I.D. NO. 500230 V004533-4
WBS NO. 1.2.6.7.1.4

DRAWING NUMBER: JS-025-ESF-W6
SHEET 1 OF 1

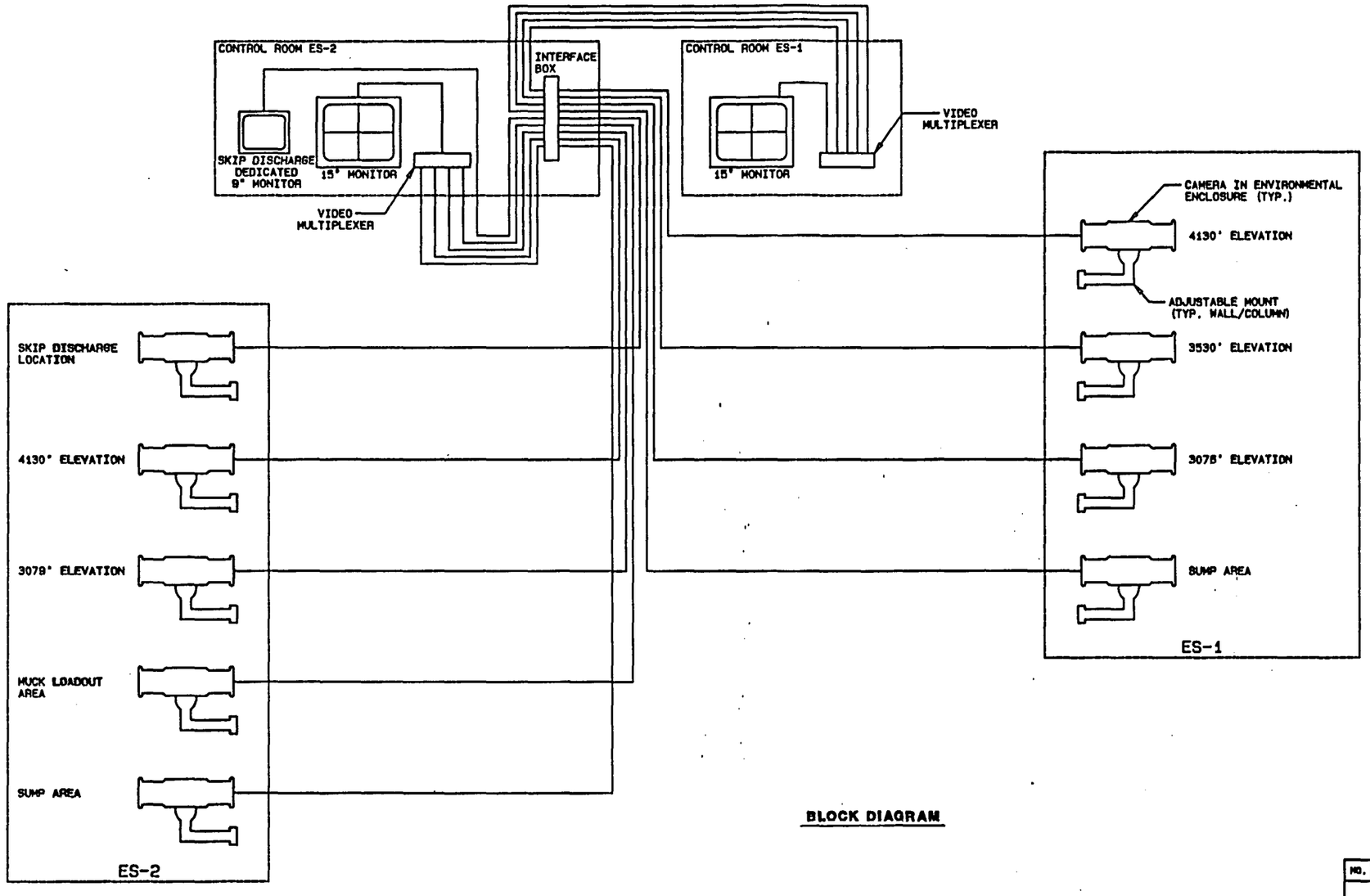

BLOCK DIAGRAM

GENERAL NOTES:

1. THIS TITLE I DRAWING DEPICTS ONLY THE MAJOR DESIGN FEATURES OF THIS PROJECT. ALL DETAILS, EQUIPMENT DESCRIPTIONS AND SPECIAL INSTRUCTIONS SHALL BE DEVELOPED DURING TITLE II EFFORT.
2. FOR SYMBOLS AND ABBREVIATIONS SEE DRAWING JS-025-ESF-T4, T3 AND T5.
3. FOR DRAWING INDEX SEE DRAWING JS-025-ESF-T2.
4. FOR QUALITY ASSURANCE LEVEL ASSIGNMENT SEE QALA NO. 8.2.2-0006 & 8.7.1-0004.

REFERENCE DRAWINGS

CCTV SURFACE BLOCK DIAGRAM ——— W8
CCTV EQUIPMENT LAYOUT ——— W8

SI APERTURE CARD

Also Available On Aperture Card

8901040172 -157

TITLE I

NO.	DATE	REVISIONS	BY	CK	LD	QA	PE	AR	ADM	DOE

U.S. DEPARTMENT OF ENERGY
NEVADA OPERATIONS OFFICE — LAS VEGAS, NEVADA

NEVADA NUCLEAR WASTE STORAGE INVESTIGATION
EXPLORATORY SHAFT FACILITY
CCTV SYSTEM
BLOCK DIAGRAM

DESIGNED BY: BAILEY | PALAGI
CHECKED BY:
SAFETY: NA
PROJECT ENGINEER:
SUBMITTED BY: HOLMES & NARVER INC.
ADMIN APPROVAL
DOE ACCEPTANCE
DATE: 12-15-88

HOLMES & NARVER INC.
ARCHITECTS-ENGINEERS
ENERGY SUPPORT DIVISION
1050 E. FLAMINGO ROAD LAS VEGAS, NEVADA 89119

P.O. NO. 509230
WO04534-7
WBS NO. 1.2.8.7.1.4

DRAWING NUMBER: JS-025-ESF-W7
SHEET 1 OF 1

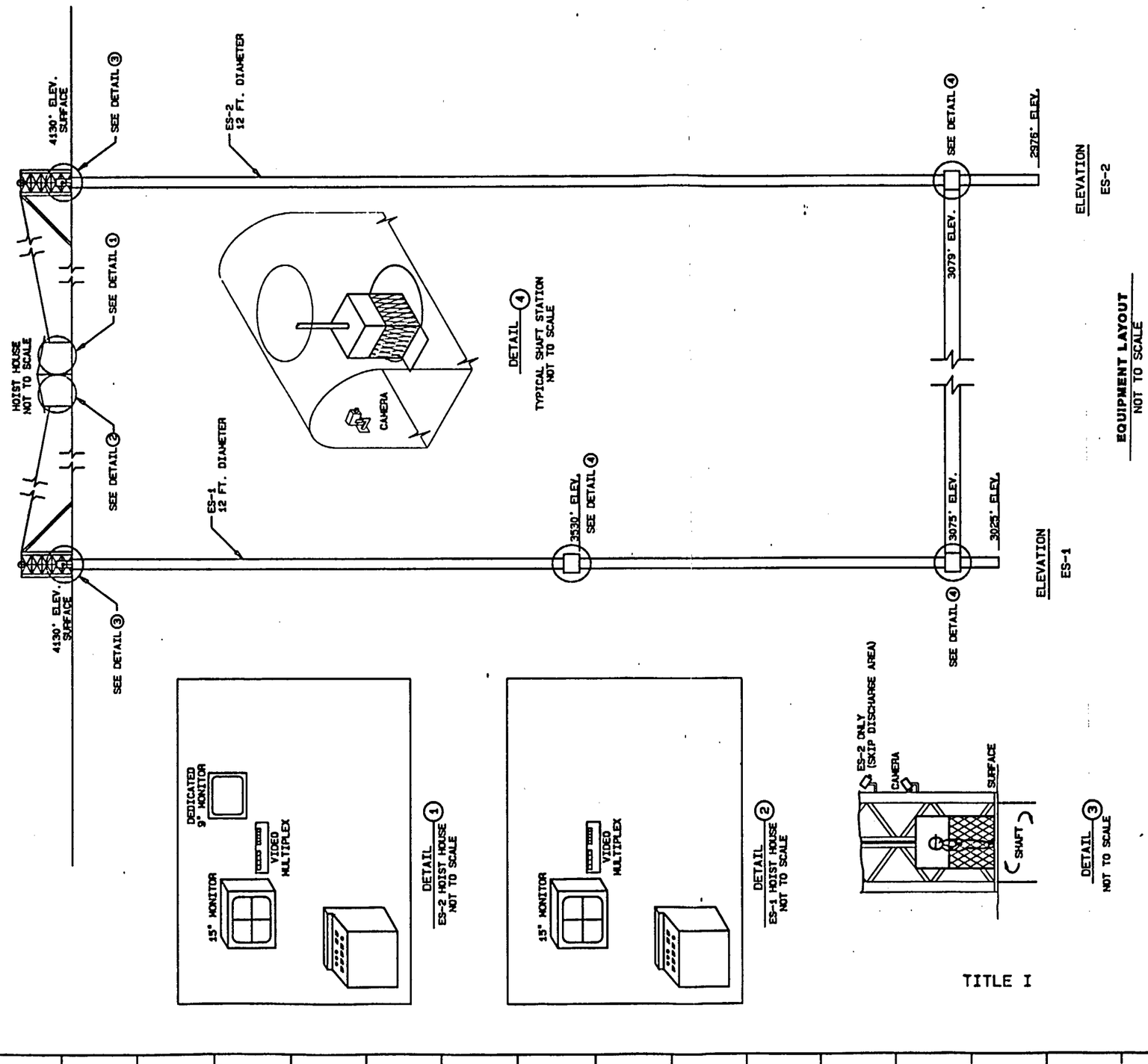

GENERAL NOTES:

1. THIS TITLE I DRAWING DEPICTS ONLY THE MAJOR DESIGN FEATURES OF THIS PROJECT. ALL DETAILS, EQUIPMENT DESCRIPTIONS AND SPECIAL INSTRUCTIONS SHALL BE DEVELOPED DURING TITLE II EFFORT.
2. FOR SYMBOLS AND ABBREVIATIONS SEE DRAWING JS-025-ESF-T4, T3 AND T5.
3. FOR DRAWING INDEX SEE DRAWING JS-025-ESF-T2.
4. FOR QUALITY ASSURANCE LEVEL ASSIGNMENT SEE QALAS NO. 6.2.2-0006 & 6.7.1-0004.

REFERENCE DRAWINGS

CCTV SURFACE BLOCK DIAGRAM ——— W6
CCTV SYSTEM BLOCK DIAGRAM ——— W7

SI APERTURE CARD

Also Available On Aperture Card

890 1040172 -158

TITLE I

NO.	DATE	REVISIONS	BY	CHK	ENG	PE	ARCH

U.S. DEPARTMENT OF ENERGY
NEVADA OPERATIONS OFFICE — LAS VEGAS, NEVADA

DESIGNED	DRAWN
BAILEY	PALAGI
CHECKED	
SAFETY NA	
PROJECT ENGINEER	

NEVADA NUCLEAR WASTE STORAGE INVESTIGATION
EXPLORATORY SHAFT FACILITY
CLOSED CIRCUIT TELEVISION (CCTV)
EQUIPMENT LAYOUT

SUBMITTED BY: HOLMES & NARVER INC. — AGENCY APPROVAL — DOE ACCEPTANCE — DATE 12-15-92

HOLMES & NARVER INC.
ARCHITECTS-ENGINEERS
ENERGY SUPPORT DIVISION
1050 E. FLAMINGO ROAD LAS VEGAS, NEVADA 89119

E.O. NO.	DRAWING NUMBER
500230 V004532-6	JS-025-ESF-W8
WBS NO. 1.2.6.7.1.4	SHEET 1 OF 1

GENERAL NOTES:

1. THIS TITLE I DRAWING DEPICTS ONLY THE MAJOR DESIGN FEATURES OF THIS PROJECT. ALL DETAILS, EQUIPMENT DESCRIPTIONS AND SPECIAL INSTRUCTIONS SHALL BE DEVELOPED DURING TITLE II EFFORT.
2. FOR SYMBOLS AND ABBREVIATIONS SEE DRAWING JS-025-ESF-T4, T5 AND T5.
3. FOR DRAWING INDEX SEE DRAWING JS-025-ESF-T2.
4. FOR QUALITY ASSURANCE LEVEL ASSIGNMENT SEE QALAS NO. 6.2.2-0006.

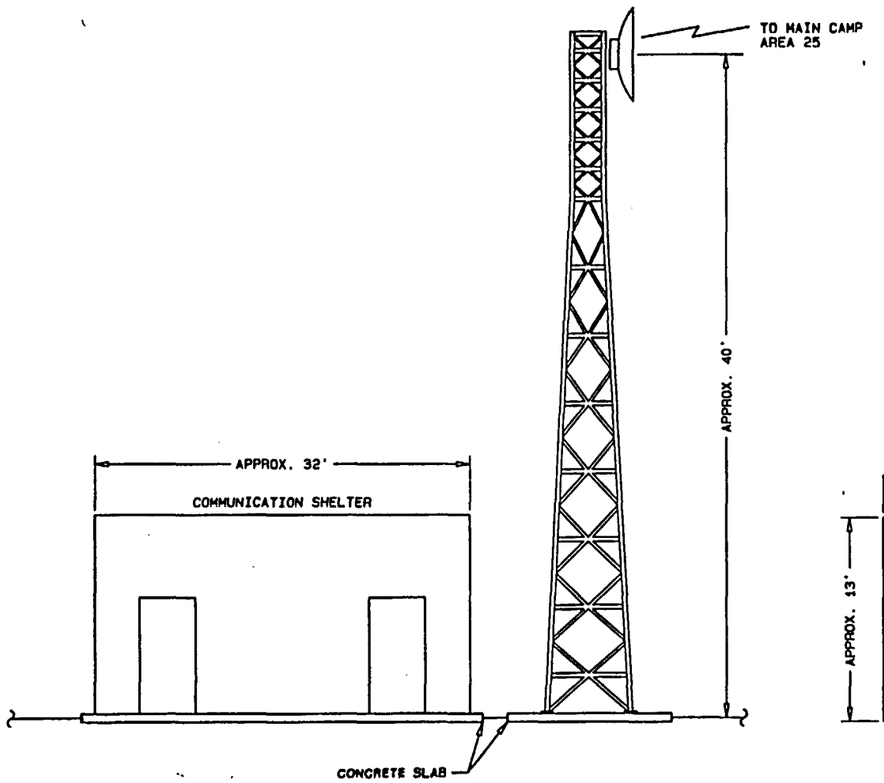

ELEVATION
NOT TO SCALE

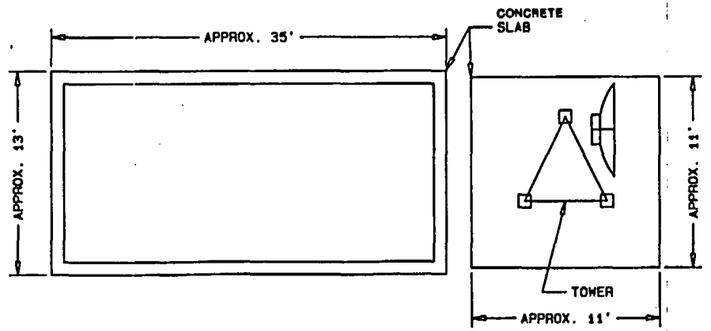

PLAN
NOT TO SCALE

REFERENCE DRAWINGS

BLOCK DIAGRAM----------W10
COMMUNICATIONS PAD SITE PLAN----------C42

SI APERTURE CARD

Also Available On Aperture Card

8901040172 - 159

TITLE I

NO.	DATE	REVISIONS	BY / CK	SAF / QA	PE / AE	AGN / DOE

U.S. DEPARTMENT OF ENERGY
NEVADA OPERATIONS OFFICE — LAS VEGAS, NEVADA

DESIGNED: DGG — DRAWN: PALAGI
CHECKED:
SAFETY: NA
PROJECT ENGINEER:

NEVADA NUCLEAR WASTE STORAGE INVESTIGATION
EXPLORATORY SHAFT FACILITY
MICROWAVE COMMUNICATIONS SHELTER

PLAN & ELEVATION

SUBMITTED: HOLMES & NARVER INC. — AGENCY APPROVAL — DOE ACCEPTANCE — DATE: 12-15-83

HOLMES & NARVER INC.
ARCHITECTS-ENGINEERS
ENERGY SUPPORT DIVISION
1900 E. FLAMINGO ROAD LAS VEGAS, NEVADA 89119

I.D. NO. 500230 V004507-4
MSS NO. 1.2.6.2.2.5

DRAWING NUMBER: JS-025-ESF-W9
SHEET 1 OF 1

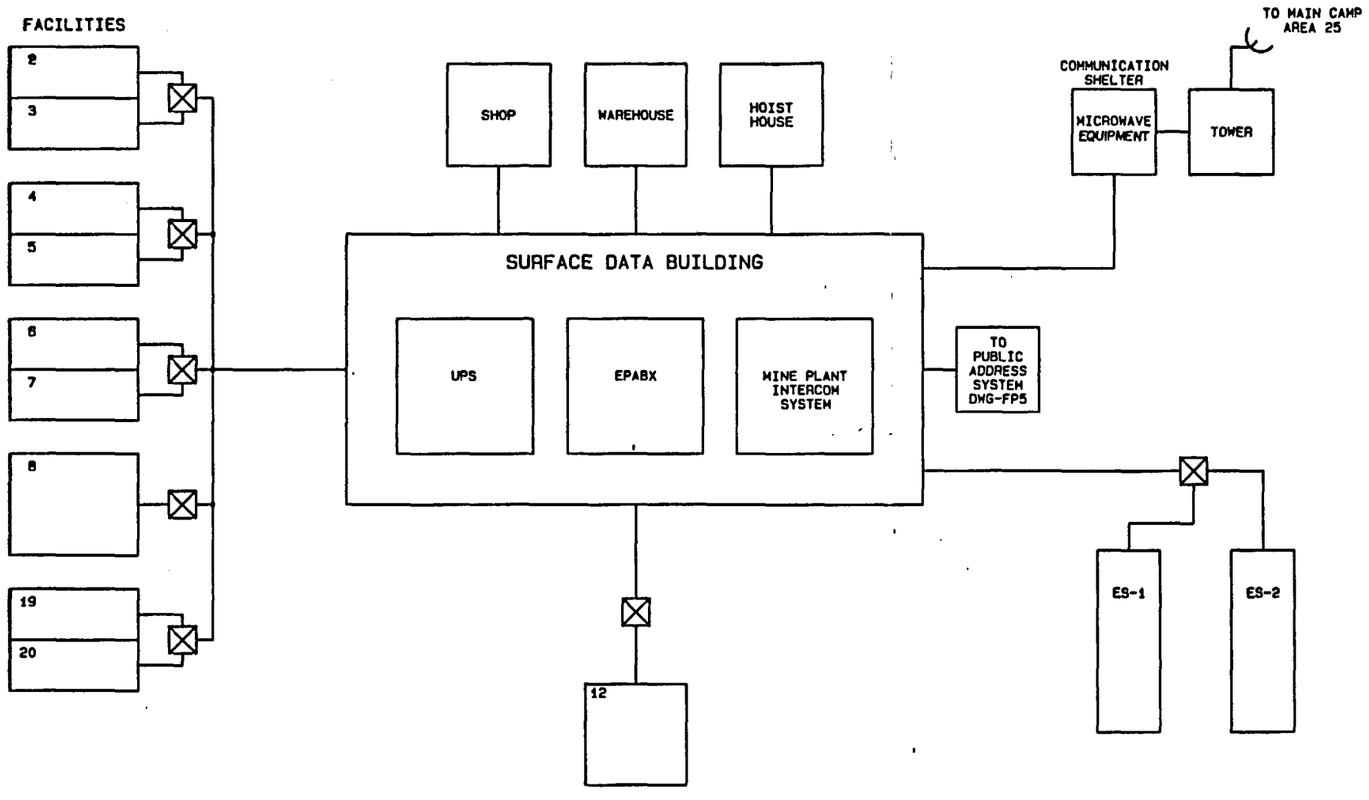

BLOCK DIAGRAM

GENERAL NOTES:

1. THIS TITLE I DRAWING DEPICTS ONLY THE MAJOR DESIGN FEATURES OF THIS PROJECT. ALL DETAILS, EQUIPMENT DESCRIPTIONS AND SPECIAL INSTRUCTIONS SHALL BE DEVELOPED DURING TITLE II EFFORT.
2. FOR SYMBOLS AND ABBREVIATIONS SEE DRAWING JS-025-ESF-T4, T3 AND T5.
3. FOR DRAWING INDEX SEE DRAWING JS-025-ESF-T2.
4. FOR QUALITY ASSURANCE LEVEL ASSIGNMENT SEE QALAS NO. 6.2.2-0006 & 6.7.1-0004.

FACILITIES:

TITLE	
2	LOS ALAMOS TRAILER
3	LAWRENCE LIVERMORE TRAILER
4	SNL/USGS TRAILER
5	SAIC TRAILER
6	H&N/F&S TRAILER
7	DOE/NRC/STATE OF NEVADA TRAILER
8	CHANGE HOUSE BUILDING
12	SUBCONTRACTORS AREA
19	REECo TRAILER
20	REECo TRAILER

REFERENCE DRAWINGS

PLAN AND ELEVATION----------W9
LIFE SAFETY & OPERATIONS CONTROL-------FP5
MAIN PAD SITE PLAN----------C4

SI
APERTURE
CARD

Also Available C
Aperture Ca

8901040178-160

TITLE I

NO.	DATE	REVISIONS	BY	CH	LJJ	BA	PE	AE	LBN	DOE

U.S. DEPARTMENT OF ENERGY
NEVADA OPERATIONS OFFICE — LAS VEGAS, NEVADA

DESIGNED: DGS | DRAWN: SHYFACE
CHECKED:
SAFETY: NA
PROJECT ENGINEER:

NEVADA NUCLEAR WASTE STORAGE INVESTIGATION
EXPLORATORY SHAFT FACILITY
SURFACE TELEPHONE SYSTEM
BLOCK DIAGRAM

SUBMITTED: HOLMES & NARVER INC. | AGENCY APPROVAL | DOE ACCEPTANCE | DATE: 12-15-89

HOLMES & NARVER INC.
ARCHITECTS-ENGINEERS
ENERGY SUPPORT DIVISION
1050 E. FLAMINGO ROAD LAS VEGAS, NEVADA 89119

I.D. NO. 500230 V004296-8
WBS NO. 1.2.0.2.2.0

DRAWING NUMBER: JS-025-ESF-W10
SHEET 1 OF 1

GENERAL NOTES:

1. THIS TITLE I DRAWING DEPICTS ONLY THE MAJOR DESIGN FEATURES OF THIS PROJECT. ALL DETAILS, EQUIPMENT DESCRIPTIONS AND SPECIAL INSTRUCTIONS SHALL BE DEVELOPED DURING TITLE II EFFORT.
2. FOR SYMBOLS AND ABBREVIATIONS SEE DRAWING JS-025-ESF-T4, T3 AND T5.
3. FOR DRAWING INDEX SEE DRAWING JS-025-ESF-T2.
4. FOR QUALITY ASSURANCE LEVEL ASSIGNMENT SEE QALAS NO. 6.2.2-0006.

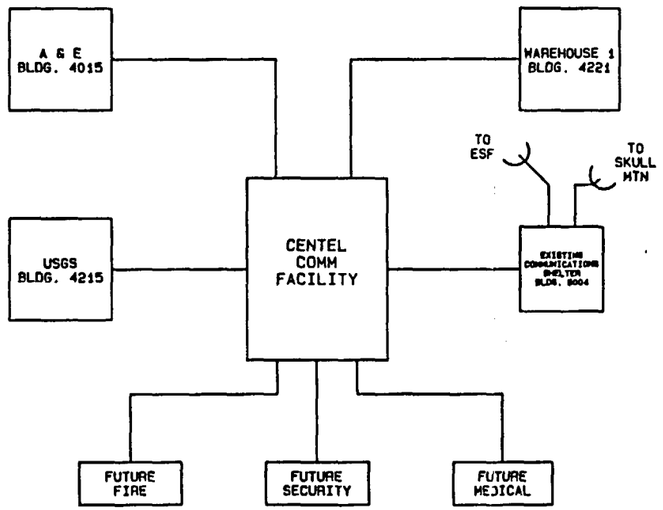

BLOCK DIAGRAM

SI
APERTURE
CARD

Also Available O
Aperture Car

8901040172-161

TITLE I

NO.	DATE	REVISIONS	BY / CK	SAF / SA	PE / AE	ASH / DOE

U.S. DEPARTMENT OF ENERGY
NEVADA OPERATIONS OFFICE — LAS VEGAS, NEVADA

DESIGNED: DGG — DRAWN: SHYFACE — CHECKED: — SAFETY: NA — S.A.: — PROJECT ENGINEER:

NEVADA NUCLEAR WASTE STORAGE INVESTIGATION
EXPLORATORY SHAFT FACILITY
AREA 25 - TELEPHONE SYSTEM

BLOCK DIAGRAM

SUBMITTED: HOLMES & NARVER INC. — AGENCY APPROVAL — DOE ACCEPTANCE — DATE

HOLMES & NARVER INC.
ARCHITECTS-ENGINEERS
ENERGY SUPPORT DIVISION
1000 E. FLAMINGO ROAD LAS VEGAS, NEVADA 89119

I.D. NO. 500230 V004297-5 — MSS NO. 1.2.0.2.2.0

DRAWING NUMBER: JS-025-ESF-W11

SHEET 1 OF 1

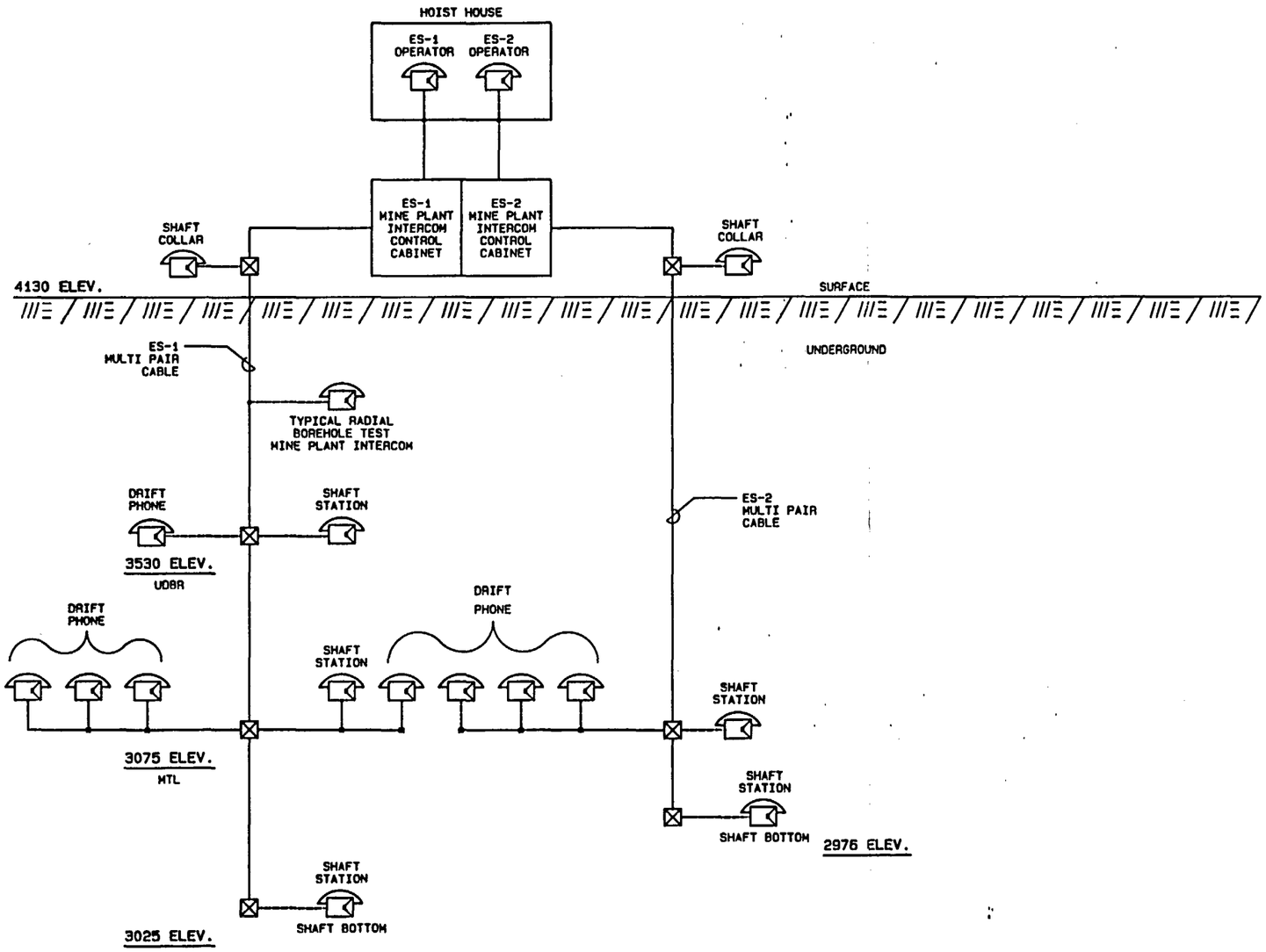

BLOCK DIAGRAM

TITLE I

GENERAL NOTES:

1. THIS TITLE I DRAWING DEPICTS ONLY THE MAJOR DESIGN FEATURES OF THIS PROJECT. ALL DETAILS, EQUIPMENT DESCRIPTIONS AND SPECIAL INSTRUCTIONS SHALL BE DEVELOPED DURING TITLE II EFFORT.
2. FOR SYMBOLS AND ABBREVIATIONS SEE DRAWING JS-025-ESF-T4, T3 AND T5.
3. FOR DRAWING INDEX SEE DRAWING JS-025-ESF-T2.
4. FOR QUALITY ASSURANCE LEVEL ASSIGNMENT SEE QALAS NO. 6.2.2-0006 & 6.7.1-0004.
5. INTERCOM SETS ARE EQUIPPED WITH DIALS AND SPEAKERS FOR DIAL ACCESS AND PAGING.

REFERENCE DRAWINGS

ES-1 AND ES-2----------W13
UPPER AND LOWER TEST LEVELS----------W14
MAIN TEST LEVEL----------W15
EXTENSION DRIFTS----------W16
SURFACE BLOCK DIAGRAM----------W17

SI APERTURE CARD

Also Available On Aperture Card

8901040172-162

NO.	DATE	REVISIONS	BY	CK	SAF	QA	PE	AE	ASN	DOE

U.S. DEPARTMENT OF ENERGY
NEVADA OPERATIONS OFFICE — LAS VEGAS, NEVADA

DESIGNED: DGG — DRAWN: PALAGI
CHECKED:
SAFETY: NA
PROJECT ENGINEER

NEVADA NUCLEAR WASTE STORAGE INVESTIGATION
EXPLORATORY SHAFT FACILITY
MINE PLANT-EXPERIMENTERS INTERCOM

BLOCK DIAGRAM

SUBMITTED: HOLMES & NARVER INC. — AGENCY APPROVAL — DOE ACCEPTANCE — DATE: 12-15-88

HOLMES & NARVER INC.
ARCHITECTS-ENGINEERS
ENERGY SUPPORT DIVISION
1000 E. FLAMINGO ROAD LAS VEGAS, NEVADA 89119

I.D. NO. 50021E V004519-4
WBS NO. 1.2.8.7.1.4

DRAWING NUMBER: JS-025-ESF-W12
SHEET 1 OF 1