YMP/88-20
DB01-0206

Vol II of Atlas of Field Activities
Vol I is Atlas of Field Activities

NN1.881221.0031

YMP/88-20
DB01-0206

U.S. DEPARTMENT OF ENERGY

OCRWM

YUCCA MOUNTAIN

YUCCA MOUNTAIN PROJECT

# YUCCA MOUNTAIN PROJECT
# EXPLORATORY SHAFT FACILITY
# TITLE I DESIGN

## SUMMARY REPORT

### VOLUME 2

### DESIGN DRAWINGS

UNITED STATES DEPARTMENT OF ENERGY
NEVADA OPERATIONS OFFICE/YUCCA MOUNTAIN PROJECT OFFICE

~~890 1050262~~

102

H&N

YUCCA MOUNTAIN PROJECT EXPLORATORY SHAFT FACILITY
TITLE I DESIGN SUMMARY REPORT

# CHAPTER 15

# ESF TITLE I DESIGN DRAWINGS

# CHAPTER 15

## DESIGN DRAWINGS

The drawings presented in this section represent the completed Title I design. Comments from the Title I 100 percent Technical Assessment Review, documented in the "Yucca Mountain Project Exploratory Shaft Facility Title I 100 Percent Technical Assessment Review, Review Record Memorandum", have been incorporated in the drawings except as noted herein.

The following list of comments by categories and numbers represent those comments deferred to Title II design. The text of the comments and resolutions can be found in the Review Record Memorandum.

### COMMENTS DEFERRED TO TITLE II DESIGN

Fenix and Scisson

Category: General-General
Comment Nos. 26, 27, 57 and 58

Category: F&S General
Comment Nos. 3, 7, 9, 10, 16, 17, 18, 19, 20, 21, 22, 23

Category: Civil
Comment Nos. 4, 7, 12, 15, 17, 18, 22, 34, 35, 36, 39, 49, 51, 53, 61, 62, 65, 67, 68, 74, 75

Category: Shaft
Comment Nos. 1, 2, 6, 23, 24, 26, 1, 32, 33, 36, 37, 38, 57, 60, 61, 63, 64, 68, 70, 83, 84, 88, 95, 112, 113, 114, 128

Category: Ventilation
Comment Nos. 1, 7, 8, 10

Category: Piping and Instrumentation
Comment Nos. 3, 6, 9, 10, 11, 12, 13, 18, 19, 20, and 22

Category: Electrical
Comment Nos. 1, 3, 6, 7, 8, 9, 11, 12, 14

Category: Mechanical
There are no drawing comments in this category deferred to Title II design.

Category: Mining
Comment Nos. 8, 13, 15, 23, 25, 30, 31, 36, 37, 40, 55, 56, 57, 68, 70, 71 and 73

Holmes and Narver

Category: General-General
Comment Nos. 18, 19, 20, 26, 27, 33, 60

Category: H&N General
Comment Nos. 6, 10, 11, 12, 13, 19, 20, 22, 23, and 27

Category: Civil
Comment Nos. 3, 5, 7, 8, 18, 19, 20, 21, 25, 26, 27, 29, 30, 31, 32, 33, 36, 40, 41, 42, 43, 44, 46, 47, 48, 51, 52, 53, 55, 56, 57, 59, 60, 62, 63, 64, 65, 68, 70, 72, 73, 75, 76, 80, 83, 84, 86, 87, 88, 89, 93, 94, 95, 96, 97, 98, 99, 100, 101, 102, 104, 105, 106, 108, 109, 111, 112, 113, 115, 116, 117, 121, 122, 123, 124, 125, 129, 130, 131, 132, 133, 134, 135, 136, 137, 138, 140, 141, 142, 146, 148, 151, 152, 153, 156, 157, 159, 163, 164, 166 and 170.

Category: Architectural
Comment Nos. 1, 3, 4, 7, 8, 9, 13, 15, 16, 19, 20, 21, 22, 25, 26, 28, 31, 32, 33, 34, 39, 40, 41, 42, 43, 44, 45, 46, 47 and 48

Category: Architectural/Structural
There are no drawing comments deferred to Title II design in this category.

Category: Mechanical/Fire Protection
Comment Nos. 4, 5, 6, 8, 17, 23, 27, 30, 34, 35, 40, 44, 45, 46, 47, 48, 49, 51, 52, 53, 54, 55, 56, 57, 58, 59, 60, 61, 62, 64, 67, 68, 69, 73, 76, 77, 78, 79, 80, 81, 83, 84, 88, 89, 90 and 91

Category: Electrical/Communications
Comment Nos. 2, 4, 5, 6, 8, 9, 10, 12, 13, 14, 16, 17, 19, 20, 27, 28, 29, 30, 31, 32, 33, 34, 35, 37, 38, 39, 44, 48, 49, 50, 51, 52, 53, 55, 56, 60, 61, 62, 63 and 64

# F&S

YUCCA MOUNTAIN PROJECT EXPLORATORY SHAFT FACILITY
TITLE I DESIGN SUMMARY REPORT

| NO. | DATE | REVISION | DES. | DRN. | CHK. | P.D.M. | O.A.R. | P.M. | YMP |
|---|---|---|---|---|---|---|---|---|---|

TRUE NORTH

# YMP EXPLORATORY SHAFT FACILITY

## TITLE I DESIGN

100% DESIGN REVIEW PACKAGE

YUCCA MOUNTAIN SITE
NYE COUNTY, NEVADA

SI APERTURE CARD

Also Available On Aperture Card

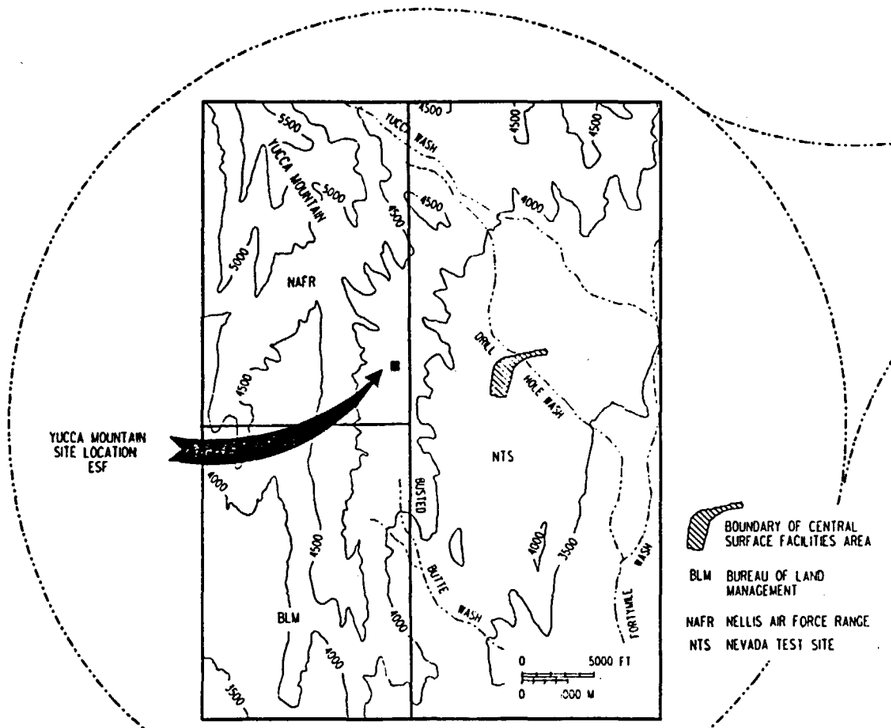


YUCCA MOUNTAIN REPOSITORY SITE

**VICINITY MAP**

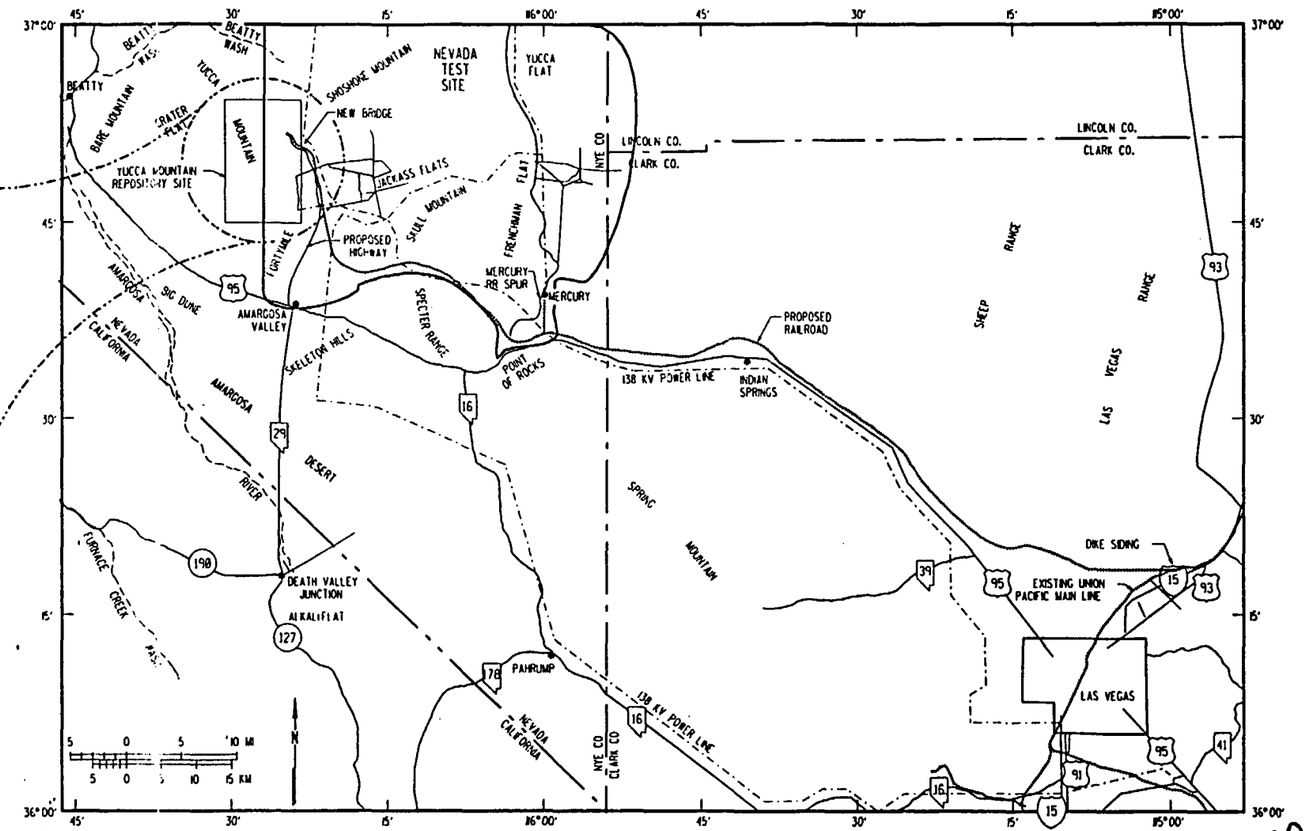


**PROJECT LOCATION MAP**

NOT TO SCALE

8901040172-10

| ITEM | REQD | MATERIAL | DESCRIPTION | DWG. NO. |
|---|---|---|---|---|

**U.S. DEPARTMENT OF ENERGY**
NEVADA OPERATIONS OFFICE — LAS VEGAS, NEVADA

| APPROVALS | | DATE |
|---|---|---|
| DESIGN | JAH | 12-8-88 |
| DRAWN | M.P.F | 9-21-88 |
| CHECKED | J.K. | 12-8-88 |
| PROJ. DES. MGR. | T.B. CH. | 12-8-88 |
| Q.A.R. | P.S.H | 12-8-88 |
| PROJ. MGR. | T.E.J | 12/8/88 |
| ACCEPTED YMPO | | 12/8/88 |

**FENIX & SCISSON, INC.**
LAS VEGAS, NEVADA

YUCCA MOUNTAIN PROJECT
EXPLORATORY SHAFT FACILITY
COVER SHEET
**VICINITY & LOCATION**

| W.B.S. NO. | DRAWING NO. | REV. |
|---|---|---|
| 1.2.6.7.2 | FS-GA-0001 | C |

| SCALE | DATE | SHEET 1 OF 1 |
|---|---|---|
| NOTED | | |

QUALITY LEVELS OF THE ITEMS OR ACTIVITIES ON THIS DRAWING SHALL BE FOUND IN THE ESF QUALITY ASSURANCE LEVEL ASSIGNMENT SHEETS. (QALAS)

| NO. | DATE | REVISION | DES. | DRN. | CHK. | P.D.M. | O.A.R. | P.M. | YMPO |
|---|---|---|---|---|---|---|---|---|---|

# YMP EXPLORATORY SHAFT FACILITY

## TITLE I DESIGN

100% DESIGN REVIEW PACKAGE

SI APERTURE CARD

Also Available On Aperture Card

### INTRODUCTION

| DWG. NO. | TITLE |
|---|---|
| FS-GA-0001 | COVER SHEET VICINITY & LOCATION |
| FS-GA-0002 | TITLE I DRAWING INDEX |
| FS-GA-0003 | TITLE I LEGEND, SHEET 1 |
| FS-GA-0004 | TITLE I LEGEND, SHEET 2 |
| FS-GA-0005 | TITLE I ABBREVIATIONS & ACRONYMS |
| FS-GA-0006 | SUBSURFACE CONCEPTUAL ARRANGEMENT |
| FS-GA-0007 | DRAWINGS BY DISCIPLINE & ASSOCIATED SPECIFICATIONS, SH. 1 |
| FS-GA-0008 | DRAWINGS BY DISCIPLINE & ASSOCIATED SPECIFICATIONS, SH. 2 |

### SURFACE

| DWG. NO. | TITLE |
|---|---|
| FS-GA-0011 | SURFACE PLOT PLAN |
| FS-GA-0012 | ES-1 SURFACE, HEADFRAME - OPERATION SECTIONS |
| FS-GA-0013 | ES-1 SURFACE, HEADFRAME - OPERATION PLAN, ELEVATION & SECTION |
| FS-GA-0014 | ES-1 SURFACE, HEADFRAME - SINKING SECTIONS |
| FS-GA-0015 | ES-1 SURFACE, HEADFRAME - SINKING ELEVATION & SECTION |
| FS-GA-0016 | ES-1 SURFACE, SINKING HOIST LOCATION PLAN |
| FS-GA-0025 | ES-1 SURFACE, SHAFT COLLAR-OPERATION PLANS & SECTIONS |
| FS-GA-0026 | ES-1 SURFACE, SHAFT COLLAR-OPERATION SECTIONS |
| FS-GA-0027 | ES-1 SURFACE, SHAFT COLLAR-SINKING PLANS |
| FS-GA-0028 | ES-1 SURFACE, SHAFT COLLAR-SINKING SECTIONS |
| FS-GA-0030 | ES-2 SURFACE, HEADFRAME-OPERATION SECTIONS |
| FS-GA-0031 | ES-2 SURFACE, HEADFRAME - OPERATION PLAN, ELEVATION & SECTION |
| FS-GA-0032 | ES-2 SURFACE, HEADFRAME - SINKING SECTIONS |
| FS-GA-0033 | ES-2 SURFACE, HEADFRAME - SINKING ELEVATION & SECTION |
| FS-GA-0034 | ES-2 SURFACE, SINKING HOIST LOCATION PLAN |
| FS-GA-0040 | ES-2 SURFACE, SHAFT COLLAR-OPERATION PLANS & SECTIONS |
| FS-GA-0041 | ES-2 SURFACE, SHAFT COLLAR-OPERATION SECTIONS |
| FS-GA-0042 | ES-2 SURFACE, SHAFT COLLAR-SINKING PLANS |
| FS-GA-0043 | ES-2 SURFACE, SHAFT COLLAR-SINKING SECTIONS |
| FS-GA-0045 | ES-1 & ES-2 SURFACE, HOIST HOUSE PLAN & SECTION |

### SHAFT (ES-1)

| DWG. NO. | TITLE |
|---|---|
| FS-GA-0050 | ES-1 SHAFT - GENERAL ARRANGEMENT CROSS - SECTIONS |
| FS-GA-0054 | ES-1 SHAFT SINKING SEQUENCE SHEET 1 |
| FS-GA-0055 | ES-1 SHAFT SINKING SEQUENCE SHEET 2 |
| FS-GA-0056 | ES-1 SHAFT SINKING SEQUENCE SHEET 3 |
| FS-GA-0057 | ES-1 SHAFT ELEVATION & TEST LOCATIONS |
| FS-GA-0058 | ES-1 SHAFT TEST ARRANGEMENTS - SHEET 1 |
| FS-GA-0059 | ES-1 SHAFT TEST ARRANGEMENTS - SHEET 2 |
| FS-GA-0062 | ES-1 SHAFT LINER SECTION & DETAILS |
| FS-GA-0063 | ES-1 SHAFT - CONCRETE FORM SECTION, PLANS & DETAIL |
| FS-GA-0072 | ES-1 SHAFT SINKING STAGE ELEVATIONS & SECTIONS |
| FS-GA-0085 | ES-1 SHAFT, UDBR SHAFT STATION SECTIONS |
| FS-GA-0091 | ES-1 SHAFT, MTL SHAFT STATION SECTIONS |
| FS-GA-0095 | ES-1 SHAFT, TAIL SHAFT SECTIONS |

### SHAFT (ES-2)

| DWG. NO. | TITLE |
|---|---|
| FS-GA-0100 | ES-2 SHAFT - GENERAL ARRANGEMENT CROSS - SECTIONS |
| FS-GA-0102 | ES-2 SHAFT LINER SECTIONS & DETAILS |
| FS-GA-0110 | ES-2 SHAFT, MTL STATION SECTIONS |
| FS-GA-0112 | ES-2 SHAFT, MTL SHAFT STATION & TAIL SHAFT - SECTIONS |
| FS-GA-0113 | ES-2 SHAFT, MTL SHAFT STATION & TAIL SHAFT - VERTICAL SECTIONS |

### SUBSURFACE

| DWG. NO. | TITLE |
|---|---|
| FS-GA-0150 | ES-1 UDBR LEVEL PLAN |
| FS-GA-0151 | ES-1 UDBR TEST AREAS |
| FS-GA-0160 | MTL PLAN - DIMENSIONAL GENERAL ARRANGEMENT |
| FS-GA-0161 | MTL PLAN - TEST AREAS GENERAL ARRANGEMENT |
| FS-GA-0162 | MAIN TEST LEVEL SECTIONS & DETAIL |
| FS-GA-0163 | MAIN TEST LEVEL - TEST ALCOVES DETAILS - SHEET 1 |
| FS-GA-0164 | MAIN TEST LEVEL - TEST ALCOVES DETAILS - SHEET 2 |
| FS-GA-0165 | MAIN TEST LEVEL - TEST ALCOVES DETAILS - SHEET 3 |
| FS-GA-0166 | MAIN TEST LEVEL - TEST ALCOVES DETAILS - SHEET 4 |
| FS-GA-0171 | MTL - SERVICE & UTILITY AREA DETAILS - SHEET 1 |
| FS-GA-0172 | MTL - SERVICE & UTILITY AREA DETAILS - SHEET 2 |
| FS-GA-0180 | SUBSURFACE MISCELLANEOUS TYPICAL DETAILS |
| FS-GA-0194 | EXPLORATORY DRIFTS GENERAL ARRANGEMENT |
| FS-GA-0195 | IMBRICATE FAULT EXPLORATORY DRIFT PLAN & SECTIONS - SHEET 1 |
| FS-GA-0196 | IMBRICATE FAULT EXPLORATORY DRIFT PLAN & SECTIONS - SHEET 2 |
| FS-GA-0197 | GHOST DANCE FAULT EXPLORATORY DRIFT PLAN & SECTION - SHEET 1 |
| FS-GA-0198 | GHOST DANCE FAULT EXPLORATORY DRIFT PLAN & SECTION - SHEET 2 |
| FS-GA-0199 | DRILL HOLE WASH FAULT EXPLORATORY DRIFT, PLAN & SECTIONS |

### UTILITIES

| DWG. NO. | TITLE |
|---|---|
| FS-GA-0200 | SURFACE ELECTRICAL ONE LINE SCHEMATIC DIAGRAM |
| FS-GA-0201 | SUBSURFACE ELECTRICAL - SHEET 1 ONE LINE SCHEMATIC DIAGRAM |
| FS-GA-0202 | SUBSURFACE ELECTRICAL - SHEET 2 ONE LINE SCHEMATIC DIAGRAM |
| FS-GA-0203 | SURFACE ELECTRICAL PLOT PLAN |
| FS-GA-0204 | SUBSURFACE ELECTRICAL PLOT PLAN |
| FS-GA-0205 | UDBR, ES-1 & ES-2 B.O.S. ELECTRICAL PLOT PLAN |
| FS-GA-0206 | SUBSURFACE ELECTRICAL ARRANGEMENT TRANSFORMER & CONTROL |
| FS-GA-0207 | SUBSURFACE ELECTRICAL ARRANGEMENT TYPICAL DETAILS |
| FS-GA-0212 | HOIST SIGNALLING SYSTEMS ONE LINE SCHEMATIC DIAGRAMS |
| FS-GA-0213 | HOIST SIGNALLING SYSTEMS ELEMENTARY CONTROL DIAGRAMS |
| FS-GA-0214 | HOIST CAGE FM RADIO SYSTEM SCHEMATIC & BLOCK DIAGRAMS |
| FS-GA-0220 | AIR & WATER SYSTEMS-INSTRUMENTATION BLOCK DIAGRAM |
| FS-GA-0221 | HOIST SYSTEMS - INSTRUMENTATION BLOCK DIAGRAMS |
| FS-GA-0222 | VENTILATION SYSTEM - INSTRUMENTATION BLOCK DIAGRAMS |
| FS-GA-0225 | VENTILATION - SCHEMATIC FLOW DIAGRAM |
| FS-GA-0227 | VENTILATION SYSTEM, PHASE 1 & 2 FLOW DIAGRAM |
| FS-GA-0228 | VENTILATION SYSTEM, PHASE 3 FLOW DIAGRAM |
| FS-GA-0230 | SUBSURFACE MINE WATER SUPPLY SYSTEM SCHEMATIC FLOW DIAGRAM |
| FS-GA-0235 | SUBSURFACE MINE WASTE WATER COLLECTION SYSTEM SCHEMATIC FLOW DIAGRAM |
| FS-GA-0240 | COMPRESSED AIR SYSTEM SCHEMATIC FLOW DIAGRAM |
| FS-GA-0243 | SURFACE COMPRESSED AIR SYSTEM PLANS & ELEVATION |

8901040172-11

NOTE: THE LETTERS GA IN THE DRAWING NUMBERS LISTED ARE TO DESIGNATE GENERAL ARRANGEMENT.

THE WORDS GENERAL ARRANGEMENT WILL ONLY APPEAR IN A FEW SELECTED TITLES, ALTHOUGH MOST DRAWINGS ARE CONSIDERED GENERAL ARRANGEMENT IN CONTENT.

QUALITY LEVELS OF THE ITEMS OR ACTIVITIES ON THIS DRAWING SHALL BE FOUND IN THE ESF QUALITY ASSURANCE LEVEL ASSIGNMENT SHEETS. (QALAS)

| ITEM | REQD | MATERIAL | DESCRIPTION | DWG. NO. |
|---|---|---|---|---|

**U.S. DEPARTMENT OF ENERGY**
NEVADA OPERATIONS OFFICE — LAS VEGAS, NEVADA

| APPROVALS | | DATE |
|---|---|---|
| DESIGN | JAH | 12-8-88 |
| DRAWN | R.G. | 12-8-88 |
| CHECKED | JK | 12-8-88 |
| PROJ. DES. MGR. | B.CH. | 12-8-88 |
| Q.A.R. | PEW | 12-8-88 |
| PROJ. MGR. | TJT | 12/8/88 |
| ACCEPTED YMPO | | |

**FENIX & SCISSON, INC.**
LAS VEGAS, NEVADA

YUCCA MOUNTAIN PROJECT
EXPLORATORY SHAFT FACILITY
TITLE I
**DRAWING INDEX**

| W.B.S. NO. | DRAWING NO. | REV. |
|---|---|---|
| 1.2.6.7.2 | FS-GA-0002 | C |

| SCALE | DATE | |
|---|---|---|
| NONE | | SHEET 1 OF 1 |

| NO. | DATE | REVISION | DES. | DRN. | CHK. | P.D.M. | O.A.R. | P.M. | YMPO |
|---|---|---|---|---|---|---|---|---|---|

# SYMBOLS

## CIVIL

### BOUNDARY

- COUNTY/MUNICIPAL
- EASEMENT
- P/L — PROPERTY LINE
- P/L — PROPERTY LINE/FENCE LINE
- SECTION LINE
- STATE
- VENDOR SUPPLIED PROPERTY LINE/FENCE LINE

### BOREHOLE

- VERTICAL
- 15° INCLINED (INCLINATION FROM VERTICAL)
- EXISTING BOREHOLE

### DRAINAGE/GRADING

- NC-6 — CULVERT, NON-SALINE RUNOFF
- SC-6 — CULVERT, SALINE RUNOFF
- +4025.5 SPOT ELEVATION IN FT.
- TOP OF FILL SLOPE TOE OF SLOPE
- TOP OF CUT SLOPE TOE OF SLOPE
- FLOW LINE
- 2% GRADE DOWN

### FENCE

- FENCE LINE
- GATE

### GRADING

- EXISTING CONTOUR
- FINISHED CONTOUR

### MISCELLANEOUS

- CENTERLINE
- M/L — MATCH LINE
- PROPOSED MONITORING WELL
- PROPOSED SOIL BORING
- PROPOSED CONSTRUCTION MONUMENT
- P.L. — FIELD OR CULTIVATION LINE
- EXISTING POWER POLE
- EXISTING IRRIGATION VALVE
- MH-1 — PROPOSED SANITARY SEWER MANHOLE
- CO-1 — SANITARY SEWER CLEANOUT

### RAILWAY

- RAIL TRACKS

### ROADWAYS

- PRIMARY HIGHWAY HARD SURFACE
- SECONDARY HIGHWAY, HARD SURFACE
- LIGHT DUTY ROADWAY, HARD SURFACE
- UNIMPROVED DIRT ROADWAY
- 27 — INTERSTATE HIGHWAY
- 40 — U.S. HIGHWAY
- 115 — STATE ROAD

### WATER BODY

- CREEK OR STREAM
- LAKE
- INTERMITTENT/ SEASONAL LAKE

### WELLS

- PROPOSED WATER WELL
- EXISTING WATER WELL

### TANKS

- PROPOSED TANK
- EXISTING TANK

## GEOLOGY

### LITHOLOGY

- DENSELY WELDED
- MODERATELY WELDED
- NON-TO PARTIALLY WELDED
- VITROPHYRE
- BEDDED
- ALLUVIUM
- VITRIC
- VAPOR PHASE
- DEVITRIFIED
- LITHOPHYSAL (DEVITRIFIED) SPARSE ABUNDANT
- DEVITRIFIED (SLIGHTLY ARGILLIC)
- ZEOLITIZED AND ARGILLIC
- SLIGHTLY ARGILLIC
- ZEOLITIZED UPPER-SLIGHTLY LOWER-MODERATELY

### STRATIGRAPHIC UNITS

| | |
|---|---|
| UO | QUATERNARY ALLUVIUM AND COLLUVIUM |
| TCw | TIVA CANYON MEMBER; WELDED, DEVITRIFIED TUFF |
| PTn | LOWER TIVA CANYON MEMBER; VITRIC NONWELDED ASHFLOWS AND BEDDED TUFFS |
| TSw1 | TOPOPAH SPRING MEMBER; WELDED DEVITRIFIED ASHFLOWS; "LITHOPHYSAL" |
| TSw2 | TOPOPAH SPRING MEMBER; WELDED DEVITRIFIED ASHFLOWS; "NONLITHOPHYSAL" |
| TSw3 | TOPOPAH SPRING MEMBER; WELDED VITRIC ASHFLOW(S) (VITROPHYRE) |
| CHnlv | TOPOPAH SPRING MEMBER; NONWELDED TO PARTIALLY WELDED VITRIC ASHFLOWS |
| CHnlz | LOWER TOPOPAH SPRING MEMBER & RHYOLITE OF CALICO HILLS |
| CHn2 | LOWER TUFFACEOUS BEDS OF CALICO HILLS (NONWELDED) |
| CHn3 | UPPERMOST PROW PASS MEMBER (DEVITRIFIED; WELDED) |
| PPw | UPPER PROW PASS MEMBER (DEVITRIFIED; WELDED) |
| CFUn | UPPER CRATER FLAT FORMATION |
| BFw | UPPER BULLFROG MEMBER (DEVITRIFIED; WELDED |
| CFMn1 | MIDDLE CRATER FLAT FORMATION (ZEOLITIC; NONWELDED) |
| CFMn2 | MIDDLE CRATER FLAT FORMATION (LOWERMOST BULLFROG MEMBER; ZEOLITIC;NONWELDED) |
| CFMn3 | MIDDLE CRATER FLAT FORMATION (UPPERMOST TRAM MEMBER; ZEOLITIC; NONWELDED) |
| TRw | LOWER TRAM MEMBER (WELDED) |

### STRUCTURE & HYDROLOGY

- CONTACT (OBSERVED-INFERED)
- 40° (1) (2) STRIKE (1) AND DIP (2)
- FAULT (OBSERVED-INFERED)
- WATER TABLE

## MINING

- RAISE
- S — STOPPING
- LINE BRATTICE
- FAN AND DUCTING
- DIRECTION OF AIR FLOW (RETURN)
- DIRECTION OF AIR FLOW (SUPPLY)
- M — ROCK BOLT, MECHANICAL ANCHOR
- SS — ROCK BOLT, SPLIT SET
- SX — ROCK BOLT, "SWELLEX"
- 27/8 — 2" 8" ROCK BOLT, PARTIALLY GROUTED
- FG — ROCK BOLT, FULLY GROUTED

### GEOTECHNICAL INSTRUMENTATION

- RESISTANCE DETECTOR, TEMPERATURE
- EMBEDDED VIBRATING WIRE STRAIN GAUGE
- WELDED VIBRATING WIRE STRAIN GAUGE
- PIEZOMETER
- DIRECTIONAL PRESSURE CELLS
- NONDIRECTIONAL PRESSURE CELLS
- 3-AXIS JOINT METERS
- VIBRATING WIRE TEMPERATURE SENSOR
- HTR — HEATER
- THERMO-COUPLE
- INCLINOMETER
- PRESSURE CELL
- FLAT JACK
- NP — NEUTRON PROBE
- MPBX — MULTIPLE POINT BOREHOLE EXTENSOMETER
- BSM — BOREHOLE STRESSMETER
- BHD — BOREHOLE DEFLECTOMETER
- BDG — BOREHOLE DEFORMATION GAGE
- ROD EXTENSOMETER
- EXTENSOMETER, VERTICAL, PERIMETER, & INTERNAL.
- ROCK BOLT LOAD CELL
- ACOUSTIC SENSOR
- MOISTURE SENSOR
- STRESS TEST

## STRUCTURAL

- CHECKERED PLATE
- CONCRETE
- EARTH
- ROCK
- ROCK FILL
- SAND
- METAL SCREEN
- EXPANDED METAL
- GRATING
- COMPRESSIBLE MATERIAL
- STRUCTURAL STEEL (IN SECTION)
- TIMBER (CROSS-SECTION)
- TIMBER (IN VIEW)
- CENTERLINE
- HANDRAIL
- OUTLINE OF EXISTING EQUIPMENT

## ARCHITECTURAL

- ACOUSTIC TILE/BOARD
- BRICK
- GLASS
- CONCRETE BLOCK
- 12 — ROOM NUMBER
- 12 — DOOR NUMBER
- 12 — TOILET ACCESSORIES NUMBER

SI APERTURE CARD

Also Available On Aperture Card

890104013 2-12

QUALITY LEVELS OF THE ITEMS OR ACTIVITIES ON THIS DRAWING SHALL BE FOUND IN THE ESF QUALITY ASSURANCE LEVEL ASSIGNMENT SHEETS. (QALAS)

| ITEM | REQD | MATERIAL | DESCRIPTION | DWG. NO. |
|---|---|---|---|---|

**U.S. DEPARTMENT OF ENERGY**
NEVADA OPERATIONS OFFICE — LAS VEGAS, NEVADA

| APPROVALS | | DATE |
|---|---|---|
| DESIGN | JAH | 12-8-89 |
| DRAWN | V.A. | 12-8-89 |
| CHECKED | JK | 12-8-89 |
| PROJ. DES. MGR. | B.C.W. | 12-8-89 |
| Q.A.R. | JBH | 12-8-89 |
| PROJ. MGR. | TLT | 12-8-89 |
| ACCEPTED TMPO | | 12/13/89 |

**FENIX & SCISSON, INC.**
LAS VEGAS, NEVADA

YUCCA MOUNTAIN PROJECT
EXPLORATORY SHAFT FACILITY
TITLE I

**LEGEND, SHEET 1**

| W.B.S. NO. | DRAWING NO. | REV. |
|---|---|---|
| 1.2.6.7.2 | FS-GA-0003 | C |

| SCALE | DATE | |
|---|---|---|
| NONE | | SHEET 1 OF 1 |

| NO. | DATE | REVISION | DES. | DRN. | CHK. | P.D.M. | O.A.R. | P.M. | YMPO |
|---|---|---|---|---|---|---|---|---|---|

# SYMBOLS

## WIRING DIAGRAMS & SCHEMATICS

- MOLDED CASE CIRCUIT BREAKER, MCP INDICATES MOTOR CIRCUIT PROTECTOR-NC THERMAL TRIP
- DISCONNECT SWITCH OR SAFETY SWITCH (LOAD BREAK TYPE)
- FUSED SWITCH DRAWOUT TYPE
- FUSE
- DRAWOUT CIRCUIT BREAKER
- DRAWOUT POWER CIRCUIT BREAKER,AC
- CONTACTOR
- LDC — LOAD DUMPING CONTACTOR
- THERMAL OVERLOAD ELEMENT
- CURRENT TRANSFORMER WITH SINGLE SECONDARY
- POTENTIAL TRANSFORMER, DRAWOUT WITH PRIMARY FUSE
- POWER TRANSFORMER-ISOLATION TYPE
- CURRENT TRANSFORMER GROUND SENSING TYPE
- 3-PHASE DELTA CONNECTION
- 3-PHASE WYE CONNECTION WITH GROUNDED NEUTRAL
- GROUND
- DIGITAL CIRCUIT (ELECTRONIC)
- ANALOG CIRCUIT (ELECTRONIC)
- TRANSFER/SELECTOR SWITCH
- 3-PHASE WYE CONNECTION W/ RESISTOR NEUTRAL GROUND
- PANEL BOARDS
  - PP-POWER PANEL
  - LP-LIGHTING PANEL
- LIGHTNING ARRESTER
- MOTOR,INDUCTION,NUMBER INDICATES HORSEPOWER *XX INDICATES MOTOR NUMBER
- AMMETER SWITCH
- VOLTMETER SWITCH
- SYNCHRONIZING SWITCH
- INSTRUMENT INDICATING:
  - A - AMMETER
  - V - VOLTMETER
  - W - WATTMETER
  - VAR - VARMETER
  - WH - WATT-HOUR METER
  - S - SYNCHROSCOPE
- 50/51 — OVERCURRENT RELAY-INSTANTANEOUS/A-C TIME
- 46 — REVERSE-PHASE CURRENT RELAY
- 86 — LOCKOUT RELAY
  - H - HAND RESET
  - E - ELECTRICALLY RESET
- 32 — POWER DIRECTIONAL RELAY

## ELECTRICAL

- 47 — PHASE-SEQUENCE VOLTAGE RELAY
- 51 — TIME OVERCURRENT RELAY
- 67 — A-C DIRECTIONAL OVERCURRENT RELAY
- 50 GS — INSTANTANEOUS OVERCURRENT GROUND SENSOR RELAY
- 50 — OVERCURRENT RELAY-INSTANTANEOUS
- 51 GS — TIME OVERCURRENT GOUND SENSOR RELAY
- 49 — MACHINE OR TRANSFORMER THERMAL RELAY
- 27 — UNDERVOLTAGE RELAY
- 63 — SUDDEN PRESSURE-RATE OR RISE
- 62 — TIME DELAY OPENING RELAY
- 37 — UNDERCURRENT RELAY USED FOR GROUND-CHECK MONITOR
- 25 — SYNCHRONIZING CHECK RELAY
- 38 — BEARING TEMPERATURE RELAY
- BUS DUCT,INSULATED
- MOTORSTARTER (DRAW OUT TYPE)
- XX — 'XX' DENOTES H.P. RATING
- VOLTAGE BOOST TRANSFORMER

## PLANS

- WALL OUTLET
- CEILING OUTLET
- FLOOD LIGHT
- PHOTOELECTRIC CONTROL OUTDOOR ENTRY WAY LIGHT
- MISCELLANEOUS ELECTRICAL EQUIPMENT (SIZE VARIES) IDENTIFICATION INSIDE OUTLINE
- CEILING LIGHT-FLOURESCENT LAMP FIXTURE
- EXIT LIGHT-WALL MOUNT
- EXIT LIGHT-CEILING MOUNT
- JUNCTION BOX
- GFCI — DUPLEX CONVENIENCE RECEPTACLE OUTLET-GROUNDING TYPE-GROUND FAULT CIRCUIT INTERRUPTER
- RECEPTACLE, (120V, SINGLE PHASE)
- END OF LINE RESISTOR
- MOTOR CONTROLLER
- GROUND ROD

- SPECIAL PURPOSE RECEPTACLE, EXPLOSION PROOF-GROUND FAULT INTERRUPTING TYPE
  - A-30AMP,SINGLE POLE, 3 WIRE,125 VOLT;
  - B-15AMP,SINGLE POLE, 3 WIRE,125 VOLT
  - D-30A,SINGLE POLE,3 WIRE, 125 V EXPLOSION PROOF
  - E-60A,3 PH,4 POLE,5 WIRE, WELDING RECEPTACLE
  - F-200A,3 WIRE,5 POLE MINE RECEPTACLE WITH GROUND AND GROUND-CHECK POLES
- SPECIAL PURPOSE RECEPTACLE, EXPLOSION PROOF-100AMP,4 POLE,4 WIRE,480 VOLT CIRCUIT BREAKING TYPE
- T — DRY TYPE TRANSFORMER-480-208/120V OR 480-120/240V
- FT — INSTRUMENT TAGE
- INSTRUMENT-LOCALLY MOUNTED
- INSTRUMENT-FRONT PANEL MOUNTED
- INSTRUMENT-REAR PANEL RACK OR CABINET MOUNTED
- INSTRUMENT-TWO VARIABLES OR DUAL FUNCTION
- A — ANNUNCIATOR POINT
- J — TREND RECORDER JACK CONNECTION
- DIGITAL COMPUTER OR DATA LOGGER SIGNAL (POINT INDICATES DIRECTION)
- RADIO TRANSCEIVER WITH SPEAKER (BATTERY POWERED)
- FM INDUCTION ANTENNA
- ROADWAY TYPE LIGHT FIXTURE ON WOOD POLE (WATTAGE & TYPE AS SPECIFIED)
- $CH_4$ — METHANE GAS DETECTOR
- O — OXYGEN DETECTOR
- H — HYDROGEN GAS DETECTOR
- $H_2S$ — HYDROGEN SULPHIDE GAS DETECTOR
- CO — OXIDES OF CARBON DETECTOR
- NO — OXIDES OF NITROGEN DETECTOR
- CH — NATURAL GAS DETECTOR
- LIGHTING PANEL-208/120V OR 120/240V
- POWER PANEL-480/277V
- S — SINGLE POLE SWITCH
- $S_2$ — DOUBLE POLE SWITCH
- $S_3$ — THREE WAY SWITCH
- $S_T$ — TIMMER SWITCH
- E — ELECTRICALLY OPERATED
- HOIST POWER CONTROL PANEL
- UPS PRIMARY SWITCHGEAR
- UPS — UPS SYSTEM (UNINTERRUPTIBLE POWER SUPPLY)
- HEATER — HEATER PANEL
- INSTRUMENTATION — INSTRUMENTATION PANEL (INSTRUMENT CONTROL PANEL)

- $S_D$ — DIMMER SWITCH
- CIRCUITS CONCEALED IN CEILING OR WALL
- CIRCUITS BELOW FLOOR OR GROUND
- CIRCUITS EXPOSED
- LPA HOME RUN TO PANEL (AS INDICATED)
- GROUND CABLE
- "EXOTHERMIC" OR MECHANICAL GROUND CONNECTION
- LIGHTNING ROD (AIR TERMINAL)
- INSTRUMENT AIR
- PNEUMATIC SIGNAL
- ELECTRICAL SIGNAL WIRING WITH SHIELD
- CAPILLARY TUBING (FILLED SYSTEM)
- 4 — TUBE BUNDLE WITH NUMBER OF TUBES
- HYDRAULIC SIGNAL
- CIRCUIT WIRE DESIGNATION, GROUND,NEUTRAL,HOT
- I — INTERLOCK,ELECTRICAL WIRING
- EXHAUST FAN
- A — AMBER INDICATING LIGHT
- RD — RED INDICATING LIGHT
- CR — CONTROL RELAY
- BUZZER
- BELL
- CR — CONTROL RELAY N.C. CONTACT
- PUSHBUTTON (NORMALLY OPEN)
- PUSHBUTTON (NORMALLY CLOSED)
- FM RADIO SIGNAL
- PIPE ANTENNA
- R — RADIO TRANSCEIVER
- GB — GROUND BUS
- PUSH BUTTON
- X — PULL BOTTLE (X DENOTES BOTTLE NUMBER)
- CONTACTS - NORMALLY CLOSED
- CONTACTS - NORMALLY OPEN (F - FORWARD) (R - REVERSING)
- NORMALLY CLOSED PULL BOTTLE OR MINE SIGNAL SWITCH
- NORMALLY OPEN PULL BOTTLE OR MINE SIGNAL SWITCH

## MECHANICAL

- DAMPER
- HOSE COUPLING
- FLEXIBLE HOSE
- CENTRIFUGAL FAN
- FLEXIBLE PUMP CONNECTOR
- FLEXIBLE DUCT
- UHTR — UNIT HEATER
- M/R — FLOW METER RECORDER
- PI — INSTRUMENTATION (PRESSURE INDICATOR SHOWN)
- WH — WATER HAMMER ARRESTER
- M — ROTARY COMPRESSOR
- M — WATER METER
- CHECK VALVE
- GATE VALVE
- BALL VALVE
- COMBINATION PRESSURE REDUCING REGULATOR/ EXCESS FLOW VALVE
- SAFETY VALVE
- VACUUM RELIEF VALVE
- PRESSURE REDUCING REGULATORS
- CAP
- AFTER COOLER
- MOISTURE SEPARATOR
- AIR DIAPHRAM PUMP
- SUBMERSIBLE PUMP
- D — LOW POINT DRAIN

## VENTILATION

- FRESH AIR SUPPLY
- RETURN AIR (EXHAUSTING RIGID DUCT)
- $D_C$ — DOOR (CLOSED POSITION)
- R — REGULATOR (DRIFT OR DUCT)
- AXIAL FAN
- $FD_O$ — FIRE DOOR (OPEN POSITION)
- $FD_C$ — FIRE DOOR (CLOSED POSITION)
- BKM — BULKHEAD WITH MANWAY
- WGSP — WATER GAUGE STATIC PRESSURE
- D — VENTILATION CONTROL DOOR
- UPCAST RAISE
- DOWNCAST RAISE
- R — STOPPING W/REGULATOR

NOTE: THE VENTILATION SYMBOLS SHOWN ABOVE ARE GENERIC IN NATURE AND NOT FOUND IN SPECIFIC STANDARDS PUBLICATIONS.

SI APERTURE CARD

Also Available On Aperture Card

8901040172-13

QUALITY LEVELS OF THE ITEMS OR ACTIVITIES ON THIS DRAWING SHALL BE FOUND IN THE ESF QUALITY ASSURANCE LEVEL ASSIGNMENT SHEETS. (QALAS)

| ITEM | REQD | MATERIAL | DESCRIPTION | DWG. NO. |
|---|---|---|---|---|

**U.S. DEPARTMENT OF ENERGY**
NEVADA OPERATIONS OFFICE — LAS VEGAS, NEVADA

| APPROVALS | | DATE |
|---|---|---|
| DESIGN | JAH | 12-8-88 |
| DRAWN | D.B. | 9-27-88 |
| CHECKED | J.K. | 12-8-88 |
| PROJ. ENG. MGR. | B.C.H. | 12-8-88 |
| Q.A.R. | PBH | 12-8-88 |
| PROJ. MGR. | TKT | 12-8-88 |
| ACCEPTED YMPO | | 12-8-88 |

**FENIX & SCISSON, INC.**
LAS VEGAS, NEVADA

YUCCA MOUNTAIN PROJECT
EXPLORATORY SHAFT FACILITY
TITLE I
**LEGEND, SHEET 2**

| W.B.S. NO. | DRAWING NO. | REV. |
|---|---|---|
| 1.2.6.7.2 | FS-GA-0004 | C |

| SCALE | DATE | SHEET |
|---|---|---|
| NONE | | 1 OF 1 |

| NO. | DATE | REVISION | DES. | DRN. | CHK. | P.D.M. | Q.A.R. | P.M. | YMPO |
|---|---|---|---|---|---|---|---|---|---|

## ABBREVIATIONS

- •AC - ALTERNATING CURRENT
- •APPROX. - APPROXIMATE
- •APPX. - APPENDIX
- -ARRGT. - ARRANGEMENT
- •ASSY - ASSEMBLY
- •AIR COND - AIR CONDITIONER
- •AMP - AMPERE
- -@ - AT
- -A - AMMETER
- •AS - AMMETER SWITCH
- -AVEL - AIR VELOCITY
- •ALM - ALARM
- •ADJSP - ADJUSTABLE SPEED
- •A/D - ANALOG TO DIGITAL
- •ADC - ANALOG TO DIGITAL CONVERTER
- •ANN - ANNUNCIATOR

- -BOS - BOTTOM OF SHAFT
- •BOT - BOTTOM
- •BRKR - BREAKER
- -BSM - BORE HOLE STRESS METER
- •BLDG - BUILDING
- -BKR - BREAKER
- •BRG - BEARING

- •CFM - CUBIC FEET PER MINUTE
- •cfm - CUBIC FEET PER MINUTE
- -CHKR'D - CHECKERED
- -CLF - CURRENT LIMITING FUSE
- •CPT - CONTROL POWER TRANSFORMER
- •COL. - COLUMN
- •COLL - COLLECTOR
- •COMM - COMMUNICATION
- -CONT'D - CONTINUED
- •CTWT - COUNTERWEIGHT
- •CU. YD. - CUBIC YARD
- •CLR - CLEAR
- -℄ - CENTERLINE
- •CONC - CONCRETE
- •CAP - CAPACITOR
- •CPRSN. - COMPRESSION
- •CB - CIRCUIT BREAKER
- •C - COMMON
- -CO - CARBON MONOXIDE
- -CO2 - CARBON DIOXIDE
- -CL - SHAFT COLLAR
- -CD - COLLAR DOOR
- -CMU - CONCRETE MASONRY UNITS

- •DBL. - DOUBLE
- •DIA. - DIAMETER
- •DN - DOWN
- •DPNL - DISTRIBUTION PANEL
- •DR - DOOR
- •DWG. NO. - DRAWING NUMBER
- •DC - DIRECT CURRENT
- -DWGS. - DRAWINGS
- •DWG. - DRAWING
- -DTL. - DETAIL
- •DB - DECIBEL
- DCA - DRIFT CONVERGENCE ANCHOR

- •EL - ELEVATION
- -ES-1 - EXPLORATORY SHAFT #1
- -ES-2 - EXPLORATORY SHAFT #2
- •EWC - ELECTRIC WATER COOLER
- •EST - ESTIMATE
- •EMI - ELECTROMAGNETIC INTERFERENCE
- •EXST - EXISTING
- -E - ELECTRICALLY OPERATED
- •EA - EACH
- -ELECT - ELECTRIC

- •$FT^2$ - SQUARE FEET
- -F/F - FACE TO FACE
- •FT - FEET
- -FVR - FULL VOLTAGE REVERSIBLE
- -FVNR - FULL VOLTAGE NON-REVERSIBLE
- •FL - FLOOR
- •FS - FAR SIDE
- •$FT^3$ - CUBIC FEET
- -F - FORWARD
- •FM - FREQUENCY MODULATION
- -FDCA - FIRE DOOR CLOSED ALARM
- -FTA - FAN TROUBLE ALARM
- -FRC - FAN REMOTE CONTROL
- •F - DEGREES FARENHIET

- •GENL. - GENERAL
- •GND - GROUND
- •GPM - GALLONS PER MINUTE
- -GC - GROUND CHECK

- •HD - HEAD
- -HFP - HEADFRAME POWER PANEL
- •HP - HORSE POWER
- -H2O - WATER
- •H - HEIGHT
- •HNDR. - HANDRAIL
- -HFP - HEAD FRAME PANEL
- -H - HOT
- -HOCR - HOIST OPERATOR CONTROL ROOM
- -H2 - HYDROGEN
- -HOC - HOIST OPERATOR CONSOLE
- -HOA - HAND-OFF - AUTOMATIC SELECTOR SWITCH
- H.F. - HEAD FRAME

- •INSTR. - INSTRUMENT
- •IN - INCH
- -IL - INDICATING LIGHT
- •INS. - INSIDE

- •KV - KILOVOLT
- •KVA - KILOVOLT AMPERE
- -KW - KILOWATT
- KHz - KILOHERTZ
- -KSI - KIPS PER SQUARE INCH

- •LG. - LENGTH
- -LHD - LOW HEAD DUMP
- -LS - LIMIT SWITCH
- -LAN - LOCAL AREA NETWORK
- -L.D.E. - LEAD DISCIPLINE ENGINEER
- -LAN - LOCAL AREA NETWORK
- -LS - LEVEL SWITCH
- -LSH - LEVEL SWITCH HIGH
- -LSL - LEVEL SWITCH LOW
- -LSHL - LEVEL SWITCH HIGH - LOW
- -LSHH - LEVEL SWITCH HIGH - HIGH
- -LSLL - LEVEL SWITCH LOW - LOW
- -LAH - LEVEL ALARM HIGH
- -LAL - LEVEL ALARM LOW
- -LAHH - LEVEL ALARM HIGH - HIGH
- -LALL - LEVEL ALARM LOW - LOW
- -LP - LIGHTING PANEL

- •MET. - METAL
- •MIN. - MINIMUM
- •MNL - MANUAL
- •MSL - MEAN SEA LEVEL
- -MTL - MAIN TEST LEVEL
- •MAX. - MAXIMUM
- •MGR - MANAGER
- -MPF - CABLE TYPE
- -MPP - MAIN POWER PANEL
- -MPC - MINE POWER CENTER
- -MCM - $X10^3$ CIRCULAR MIL
- •MIC - MICROPHONE
- -M - MICRO ($10^{-6}$)
- -MM - MILIMETER

- •N.C. - NORMALLY CLOSED
- •N.O. - NORMALLY OPEN
- •NS - NEAR SIDE
- •NOM - NOMINAL
- •N.T.S. - NOT TO SCALE
- •NO. - NUMBER
- -N - NEUTRAL
- -NO - NITROGEN OXIDE
- -NO2 - NITROGEN DIOXIDE

- -O2 - OXYGEN
- -OT - OVER TRAVEL
- -OL - OVER LOAD

- -PAHH - PRESSURE ALARM HIGH HIGH
- -PALL - PRESSURE ALARM LOW LOW
- -PI - PRESSURE INDICATOR
- -PSIG - POUNDS PER SQUARE INCH GAGE
- -PMDS - PAD MOUNT DISCONNECT SWITCH
- •PL - PLATE
- -PLCS - PLACES
- •PWR - POWER
- •PVC - POLYVINYL CHLORIDE
- •PSI - POUNDS PER SQUARE INCH
- •PROJ. - PROJECT
- -P.D.M. - PROJECT DESIGN MANAGER
- •PT - POINT
- -PP - POWER PANEL
- -PBAR - PRESSURE BAROMETRIC
- -PFD - PRESSURE FAN DISCHARGE
- -PS - PRESSURE SWITCH
- -PSH - PRESSURE SWITCH HIGH
- -PSL - PRESSURE SWITCH LOW
- -PSHL - PRESSURE SWITCH HIGH LOW
- -PSHH - PRESSURE SWITCH HIGH HIGH
- -PSLL - PRESSURE SWITCH LOW LOW
- -PAH - PRESSURE ALARM HIGH
- -PAL - PRESSURE ALARM LOW
- -PDP - POWER DISTRIBUTION PANEL

- •RAD - RADIUS
- •REF. - REFERENCE
- •REQ'D. - REQUIRED
- •RM - ROOM
- •RF - RADIO FREQUENCY
- •REV - REVISION
- •RTD - RESISTANCE TEMPERATURE DETECTORS
- -R - REVERSING
- -RD - RED

- •STRL - STRUCTURAL
- -SCFM - STANDARD CUBIC FEET PER MINUTE
- •STA - STATION
- •STD - STANDARD
- -SO2 - SULPHUR DIOXIDE
- -SBO - BLACK-OUT SWITCH
- -SPSN - POSITION SWITCH
- -SR - SLACK ROPE

- -T.O.C. - TOP OF CONCRETE
- -T.O.G. - TOP OF GRATING
- •TYP. - TYPICAL
- -TRANS. - TRANSFER
- -T.O.S. - TOP OF STEEL
- •TEMP. - TEMPERATURE
- •THD - THREAD
- -T/R - RADIO TRANSCIEVER
- -TA - TEMPERATURE-AIR
- -TBRG - TEMPERATURE BEARING
- -TWB - TEMPERATURE WET BULB
- TDB - TEMPERATURE DRY BULB
- -TS - TEMPERATURE SWITCH
- -TSH - TEMPERATURE SWITCH HIGH
- -TSL - TEMPERATURE SWITCH LOW
- -TSHL - TEMPERATURE SWITCH HIGH LOW
- -TSHH - TEMPERATURE SWITCH HIGH HIGH
- -TSLL - TEMPERATURE SWITCH LOW LOW
- -TAH - TEMPERATURE ALARM HIGH
- -TAL - TEMPERATURE ALARM LOW
- -TAHH - TEMPERATURE ALARM HIGH HIGH
- -TALL - TEMPERATURE ALARM LOW LOW

- -UDBR - UPPER DEMONSTRATION BREAKOUT ROOM
- -UON - UNLESS OTHERWISE NOTED

- •V - VOLT
- •VAC - VOLTS-ALTERNATING CURRENT
- •VDC - VOLTS-DIRECT CURRENT
- •VS - VOLTMETER SWITCH
- -VENT. - VENTILATION

- •WH - WATER HEATER
- •W.P. - WORKING POINT
- •W - WIDTH
- •W/ - WITH
- •WT - WEIGHT
- •W - WIRE
- -WH - WATT HOUR METER
- •W - WATT
- -WGSP - WATER GAGE STATIC PRESSURE

- •XFMR - TRANSFORMER
- -XVM - MOTOR VIBRATION SENSOR

- •3/C - 3 CONDUCTOR
- ϕ - PHASE
- % - PERCENT
- ' - FOOT
- " - INCH
- # - POUND
- & - AND
- 120VAC - 120 VOLTS ALTERNATING CURRENT
- 120VDC - 120 VOLTS DIRECT CURRENT

## ACRONYMS

- BDG - BOREHOLE DEFORMATION GAUGE
- BLM - BUREAU OF LAND MANAGEMENT
- DAS - DATA AQUISITION SYSTEM
- DBR - DEMONSTRATION BREAKOUT ROOM
- DOE - DEPARTMENT OF ENERGY
- ES - EXPLORATORY SHAFT
- ESF - EXPLORATORY SHAFT FACILITY
- F&S - FENIX & SCISSON, INC.
- GFE - GOVERNMENT FURNISHED EQUIPMENT
- H&N - HOLMES & NARVER, INC.
- IDS - INTEGRATED DATA SYSTEM
- LANL - LOS ALAMOS NATIONAL LABORATORY
- LLNL - LAWRENCE LIVERMORE NATIONAL LABORATORY
- MPBX - MULTIPLE-POINT BOREHOLE EXTENSOMETER
- NAFR - NELLIS AIR FORCE RANGE
- NNWSI - NEVADA NUCLEAR WASTE STORAGE INVESTIGATIONS
- NRC - NUCLEAR REGULATORY COMMISSION
- NTS - NEVADA TEST SITE
- PM - PROJECT MANAGER
- QAR - QUALITY ASSURANCE REPRESENTATIVE
- QALAS - QUALITY ASSURANCE REPRESENTATIVE ASSIGNMENT SHEET
- REECO - REYNOLDS ELECTRICAL & ENGINEERING CO., INC.
- SAIC - SCIENCE APPLICATIONS INTERNATIONAL CORPORATION
- SDRD - SUBSYSTEM DESIGN REQUIREMENTS DOCUMENT
- SNL - SANDIA NATIONAL LABORATORIES
- TBD - TO BE DETERMINED
- TC - THERMOCOUPLE
- UPS - UNINTERUPTIBLE POWER SYSTEM
- USBM - UNITED STATES BUREAU OF MINES
- USGS - UNITED STATES GEOLOGICAL SURVEY
- YMP - YUCCA MOUNTAIN PROJECT
- YMPO - YUCCA MOUNTAIN PROJECT OFFICE
- •UL - UNIVERSAL LABORATORIES.

SI APERTURE CARD

Also Available On Aperture Card

- • ANSI ABBREVIATIONS
- - GENERIC ABBREVIATIONS

8901040172-14

QUALITY LEVELS OF THE ITEMS OR ACTIVITIES ON THIS DRAWING SHALL BE FOUND IN THE ESF QUALITY ASSURANCE LEVEL ASSIGNMENT SHEETS. (QALAS)

| ITEM | REQD | MATERIAL | DESCRIPTION | DWG. NO. |
|---|---|---|---|---|

**U.S. DEPARTMENT OF ENERGY**
NEVADA OPERATIONS OFFICE — LAS VEGAS, NEVADA

| APPROVALS | | DATE |
|---|---|---|
| DESIGN | J.A.H. | 12-8-88 |
| DRAWN | AAS | 12-8-88 |
| CHECKED | J K | 12-8-88 |
| PROJ. DES. MGR. | B.C.M. | 12-8-88 |
| Q.A.R. | FBN | 12-8-88 |
| PROJ. MGR. | TEZ | 12-8-88 |
| ACCEPTED YMPO | | 12/8/88 |

**FENIX & SCISSON, INC.**
LAS VEGAS, NEVADA

YUCCA MOUNTAIN PROJECT
EXPLORATORY SHAFT FACILITY
TITLE I
**ABBREVIATIONS & ACRONYMS**

| W.B.S. NO. | DRAWING NO. | REV. |
|---|---|---|
| 1.2.6.7.2 | FS-GA-0005 | C |

| SCALE | DATE | SHEET 1 OF 1 |
|---|---|---|
| NONE | | |

| NO. | DATE | REVISION | DES. | DRN. | CHK. | P.D.M. | O.A.R. | P.M. | YMPO |
|---|---|---|---|---|---|---|---|---|---|

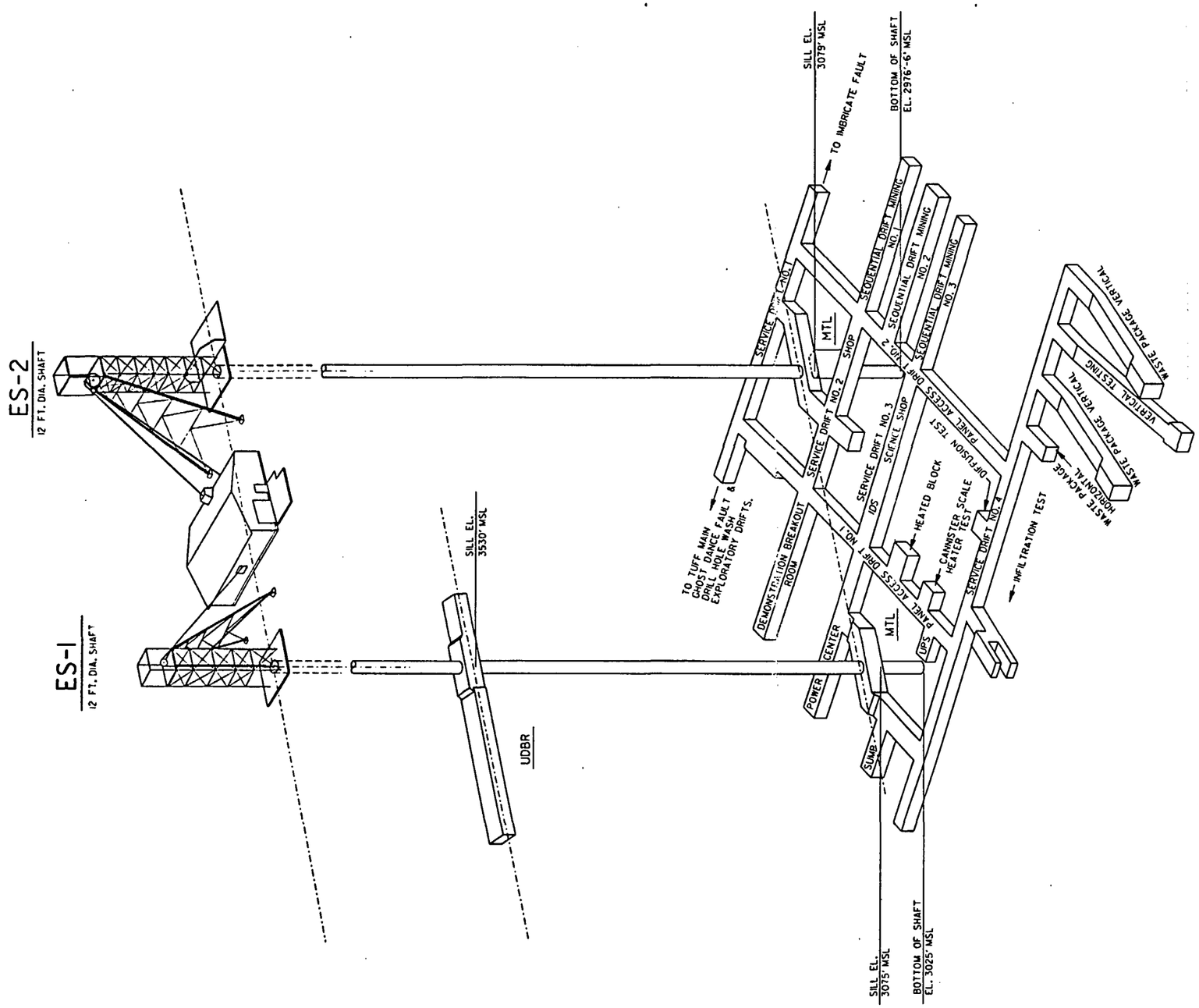


SI APERTURE CARD

Also Available On Aperture Card

REFERENCE DRAWINGS
FS-GA-0005 TITLE I ABBREVIATIONS & ACRONYMS

8901040172-15

QUALITY LEVELS OF THE ITEMS OR ACTIVITIES ON THIS DRAWING SHALL BE FOUND IN THE ESF QUALITY ASSURANCE LEVEL ASSIGNMENT SHEETS. (QALAS)

| ITEM | REQD | MATERIAL | DESCRIPTION | DWG. NO. |
|---|---|---|---|---|

**U.S. DEPARTMENT OF ENERGY**
NEVADA OPERATIONS OFFICE — LAS VEGAS, NEVADA

| APPROVALS | | DATE |
|---|---|---|
| DESIGN | [illegible] | [illegible] |
| DRAWN | D.M. | [illegible] |
| CHECKED | JAH | [illegible] |
| PROJ. DES. MGR. | B.CH. | [illegible] |
| Q.A.R. | [illegible] | [illegible] |
| PROJ. MGR. | [illegible] | [illegible] |
| ACCEPTED YMPO | [illegible] | [illegible] |

**FENIX & SCISSON, INC.**
LAS VEGAS, NEVADA

YUCCA MOUNTAIN PROJECT
EXPLORATORY SHAFT FACILITY
SUBSURFACE
**CONCEPTUAL ARRANGEMENT**

| W.B.S. NO. | DRAWING NO. | REV. |
|---|---|---|
| 1.2.6.7.2 | FS-GA-0006 | C |
| SCALE 1"=50' | DATE | SHEET 1 OF 1 |

| NO. | DATE | REVISION | DES. | DRN. | CHK. | P.D.M. | O.A.R. | P.M. | YMPO |
|---|---|---|---|---|---|---|---|---|---|

## SHAFT SINKING

### DRAWINGS

| | |
|---|---|
| FS-GA-0050 | ES-1 SHAFT - GENERAL ARRANGEMENT CROSS - SECTIONS |
| FS-GA-0054 | ES-1 SHAFT SINKING SEQUENCE SHEET 1 |
| FS-GA-0055 | ES-1 SHAFT SINKING SEQUENCE SHEET 2 |
| FS-GA-0056 | ES-1 SHAFT SINKING SEQUENCE SHEET 3 |
| FS-GA-0057 | ES-1 SHAFT ELEVATION & TEST LOCATIONS |
| FS-GA-0058 | ES-1 SHAFT TEST ARRANGEMENTS - SHEET 1 |
| FS-GA-0059 | ES-1 SHAFT TEST ARRANGEMENTS - SHEET 2 |
| FS-GA-0062 | ES-1 SHAFT LINER SECTIONS & DETAILS |
| FS-GA-0063 | ES-1 SHAFT - CONCRETE FORM SECTIONS, PLANS & DETAIL |
| FS-GA-0072 | ES-1 SHAFT SINKING STAGE ELEVATIONS & SECTIONS |
| FS-GA-0085 | ES-1 SHAFT, UPPER SHAFT STATION SECTIONS |
| FS-GA-0091 | ES-1 SHAFT MTL SHAFT STATION SECTIONS |
| FS-GA-0095 | ES-1 SHAFT, TAIL SHAFT SECTIONS |
| FS-GA-0100 | ES-2 SHAFT, GENERAL ARRANGEMENT CROSS - SECTIONS |
| FS-GA-0102 | ES-2 SHAFT LINER SECTIONS & DETAILS |
| FS-GA-0110 | ES-2 SHAFT, MTL STATION SECTIONS |
| FS-GA-0112 | ES-2 SHAFT, MTL SHAFT STATION & TAIL SHAFT SECTIONS |
| FS-GA-0113 | ES-2 SHAFT, MTL SHAFT STATION & TAIL SHAFT VERTICAL SECTIONS |

### ASSOCIATED SPECIFICATIONS

| | |
|---|---|
| FS-SP-0202 | SHAFT SINKING, ES-1 |
| FS-SP-0203 | SHAFT SINKING, ES-2 |
| FS-SP-0204 | EXCAVATION FOR STATION, DRIFTS & ALCOVES |
| FS-SP-0205 | CONTROLLED DRILLING AND BLASTING |
| FS-SP-0208 | ROCK BOLTING |
| FS-SP-0213 | TEST DRILL: ELECTROHYDRAULIC POWERED COLUMN MOUNTED |
| FS-SP-0215 | TEST DRILL: COMPRESSED AIR POWERED SCREW FEED TYPE |
| FS-SP-0301 | FORMS, SHAFT LINER |
| FS-SP-0303 | CAST-IN-PLACE CONCRETE |
| FS-SP-0304 | GROUT, MATERIALS AND PLACEMENT |
| FS-SP-0307 | SHOTCRETE |
| FS-SP-0308 | SHAFT LINER CONCRETE |
| FS-SP-0501 | STRUCTURAL STEEL |
| FS-SP-0502 | MISCELLANEOUS STEEL |
| FS-SP-0503 | ANCHOR BOLTS AND EMBEDDED ITEMS |
| FS-SP-0504 | WELDING |
| FS-SP-0701 | SUMP LINERS |
| FS-SP-0902 | PAINTING - EQUIPMENT |
| FS-SP-1406 | SHAFT CONVEYANCE GUIDES |
| FS-SP-1407 | ES-1 SHAFT SINKING DECK |
| FS-SP-1408 | ES-1 CONVEYANCE |
| FS-SP-1409 | ES-2 MUCK LOADING SYSTEM |
| FS-SP-1410 | MONORAIL HOISTS AND JIB CRANES |
| FS-SP-1411 | ES-2 CONVEYANCE |
| FS-SP-1412 | SINKING COLLAR DOORS |
| FS-SP-1414 | WIRE ROPE AND ATTACHMENTS |
| FS-SP-1416 | ES-1 SHAFT EQUIPPING |
| FS-SP-1417 | ES-2 SHAFT EQUIPPING |
| FS-SP-1418 | EMERGENCY ESCAPE HOIST |
| FS-SP-1500 | GENERAL REQUIREMENTS, MECHANICAL |
| FS-SP-1501 | PIPE AND FITTINGS |
| FS-SP-1504 | MAIN MINE VENTILATION FANS |
| FS-SP-1505 | AUXILIARY MINE VENTILATION FANS |
| FS-SP-1506 | VENTILATION DUCTING |
| FS-SP-1507 | VALVES |
| FS-SP-1509 | CONTROL & MONITORING OF MECHANICAL UTILITIES |
| FS-SP-1510 | MINE WATER SUPPLY DISTRIBUTION SYSTEM |
| FS-SP-1511 | MINE WASTE WATER REMOVAL SYSTEM |
| FS-SP-1512 | COMPRESSED AIR SYSTEM |
| FS-SP-1612 | ELECTRICAL CABLE |
| FS-SP-1616 | GROUNDING & LIGHTNING PROTECTION SYSTEMS |
| FS-SP-1617 | SUBSURFACE AND SHAFT ELECTRIC DISTRIBUTION |

## SURFACE - CONSTRUCTION

### DRAWINGS

| | |
|---|---|
| FS-GA-0011 | SURFACE PLOT PLAN |
| FS-GA-0025 | ES-1 SURFACE, SHAFT COLLAR-OPERATION PLANS & SECTION |
| FS-GA-0026 | ES-1 SURFACE, SHAFT COLLAR-OPERATION SECTIONS |
| FS-GA-0027 | ES-1 SURFACE, SHAFT COLLAR - SINKING PLANS |
| FS-GA-0028 | ES-1 SURFACE, SHAFT COLLAR - SINKING SECTIONS |
| FS-GA-0040 | ES-2 SURFACE, SHAFT COLLAR-OPERATION PLANS & SECTION |
| FS-GA-0041 | ES-2 SURFACE, SHAFT COLLAR-OPERATION SECTIONS |
| FS-GA-0042 | ES-2 SURFACE, SHAFT COLLAR - SINKING PLANS |
| FS-GA-0043 | ES-2 SURFACE, SHAFT COLLAR - SINKING SECTIONS |
| FS-GA-0045 | ES-1 & ES-2 SURFACE, HOIST HOUSE PLAN & SECTION |

### ASSOCIATED SPECIFICATIONS

| | |
|---|---|
| FS-SP-0201 | ES-1 & ES-2 COLLAR INSTALLATION |
| FS-SP-0301 | FORMS, SHAFT LINER |
| FS-SP-0303 | CAST-IN-PLACE CONCRETE |
| FS-SP-0304 | GROUT, MATERIALS AND PLACEMENT |
| FS-SP-0307 | SHOTCRETE |
| FS-SP-0308 | SHAFT LINER CONCRETE |
| FS-SP-1407 | ES-1 SHAFT SINKING DECK |
| FS-SP-1412 | SINKING COLLAR DOORS |
| FS-SP-1414 | WIRE ROPE AND ATTACHMENTS |
| FS-SP-1501 | PIPE AND FITTINGS |
| FS-SP-1504 | MAIN MINE VENTILATION FANS |
| FS-SP-1507 | VALVES |
| FS-SP-1510 | MINE WATER SUPPLY DISTRIBUTION SYSTEM |
| FS-SP-1511 | MINE WASTE WATER REMOVAL SYSTEM |
| FS-SP-1512 | COMPRESSED AIR SYSTEM |
| FS-SP-1600 | GENERAL REQUIREMENTS, ELECTRICAL |
| FS-SP-1603 | ELECTRICAL MOTORS - 4160 VOLT |
| FS-SP-1604 | LIGHTING SYSTEMS |
| FS-SP-1605 | GROUND FAULT PROTECTION |
| FS-SP-1606 | BELL & BUZZER CORD SIGNALING SYSTEM |
| FS-SP-1607 | HOIST/CAGE RADIO COMMUNICATION SYSTEM |
| FS-SP-1619 | ELECTRICAL SHAFT HEATERS - 4.16KV |

## HEADFRAME

### DRAWINGS

| | |
|---|---|
| FS-GA-0012 | ES-1 SURFACE, HEADFRAME - OPERATION SECTIONS |
| FS-GA-0013 | ES-1 SURFACE, HEADFRAME - OPERATION PLAN, ELEVATIONS & SECTION |
| FS-GA-0014 | ES-1 SURFACE, HEADFRAME - SINKING SECTIONS |
| FS-GA-0015 | ES-1 SURFACE, HEADFRAME - SINKING ELEVATION & SECTIONS |
| FS-GA-0016 | ES-1 SURFACE, SINKINK HOIST LOCATION PLAN |
| FS-GA-0030 | ES-2 SURFACE, HEADFRAME - OPERATION SECTIONS |
| FS-GA-0031 | ES-2 SURFACE, HEADFRAME - OPERATION PLAN, ELEVATIONS & SECTION |
| FS-GA-0032 | ES-2 SURFACE, HEADFRAME - SINKING SECTIONS |
| FS-GA-0033 | ES-2 SURFACE, HEADFRAME - SINKING ELEVATION & SECTION |
| FS-GA-0034 | ES-2 SURFACE, SINKINK HOIST LOCATION PLAN |

### ASSOCIATED SPECIFICATIONS

| | |
|---|---|
| FS-SP-0501 | STRUCTURAL STEEL |
| FS-SP-0502 | MISCELLANEOUS STEEL |
| FS-SP-0503 | ANCHOR BOLTS AND EMBEDDED ITEMS |
| FS-SP-0504 | WELDING |
| FS-SP-0902 | PAINTING - EQUIPMENT |
| FS-SP-1403 | ES-1 HEADFRAME |
| FS-SP-1404 | ES-2 HEADFRAME |
| FS-SP-1406 | SHAFT CONVEYANCE GUIDES |
| FS-SP-1408 | ES-1 CONVEYANCE |
| FS-SP-1411 | ES-2 CONVEYANCE |
| FS-SP-1413 | FIXED AND RETRACTABLE MUCK CHUTES |
| FS-SP-1414 | WIRE ROPE AND ATTACHMENTS |
| FS-SP-1500 | GENERAL REQUIREMENTS, MECHANICAL |

8901040172-16

SI APERTURE CARD

Also Available On Aperture Card

QUALITY LEVELS OF THE ITEMS OR ACTIVITIES ON THIS DRAWING SHALL BE FOUND IN THE ESF QUALITY ASSURANCE LEVEL ASSIGNMENT SHEETS. (QALAS)

| ITEM | REQD | MATERIAL | DESCRIPTION | DWG. NO. |
|---|---|---|---|---|

**U.S. DEPARTMENT OF ENERGY**
NEVADA OPERATIONS OFFICE — LAS VEGAS, NEVADA

| APPROVALS | | DATE |
|---|---|---|
| DESIGN | JAH | 2-8-88 |
| DRAWN | AAS | 2-7-88 |
| CHECKED | J.K. | 12-8-88 |
| PROJ. DES. MGR. | B.C.M. | 12-8-88 |
| Q.A.R. | JBH | 12-8-88 |
| PROJ. MGR. | RKT | 12-8-88 |
| ACCEPTED THRU | [illegible] | 12-8-88 |

**FENIX & SCISSON, INC.**
LAS VEGAS, NEVADA

YUCCA MOUNTAIN PROJECT
EXPLORATORY SHAFT FACILITY
DRAWINGS BY DISCIPLINE &
**ASSOCIATED SPECIFICATIONS SH.1**

| W.B.S. NO. | DRAWING NO. | REV. |
|---|---|---|
| 1.2.6.7.2 | FS-GA-0007 | C |
| SCALE: NONE | DATE | SHEET 1 OF 1 |

| NO. | DATE | REVISION | DES. | DRN. | CHK. | P.D.M. | O.A.R. | P.M. | YMPO |
|---|---|---|---|---|---|---|---|---|---|

## MTL CONSTRUCTION & TESTING

### DRAWINGS

| | |
|---|---|
| FS-GA-0150 | ES-1 UDBR LEVEL PLAN |
| FS-GA-0151 | ES-1 UDBR TEST AREAS |
| FS-GA-0160 | MTL PLAN - DIMENSIONAL GENERAL ARRANGEMENT |
| FS-GA-0161 | MTL PLAN - TEST AREAS GENERAL ARRANGEMENT |
| FS-GA-0162 | MAIN TEST LEVEL SECTIONS AND DETAIL |
| FS-GA-0163 | MAIN TEST LEVEL - TEST ALCOVE DETAILS - SHEET 1 |
| FS-GA-0164 | MAIN TEST LEVEL - TEST ALCOVE DETAILS - SHEET 2 |
| FS-GA-0165 | MAIN TEST LEVEL - TEST ALCOVE DETAILS - SHEET 3 |
| FS-GA-0166 | MAIN TEST LEVEL - TEST ALCOVE DETAILS - SHEET 4 |
| FS-GA-0171 | MTL - SERVICE AND UTILITY AREA DETAILS - SHEET 1 |
| FS-GA-0172 | MTL - SERVICE AND UTILITY AREA DETAILS - SHEET 2 |
| FS-GA-0180 | SUBSURFACE MISCELLANEOUS TYPICAL DETAIL |
| FS-GA-0194 | EXPLORATORY DRIFTS GENERAL ARRANGEMENT |
| FS-GA-0195 | IMBRICATE FAULT EXPLORATORY DRIFT PLAN AND SECTIONS - SHEET 1 |
| FS-GA-0196 | IMBRICATE FAULT EXPLORATORY DRIFT PLAN AND SECTIONS - SHEET 2 |
| FS-GA-0197 | GHOST DANCE FAULT EXPLORATORY DRIFT PLAN AND SECTIONS - SHEET 1 |
| FS-GA-0198 | GHOST DANCE FAULT EXPLORATORY DRIFT PLAN AND SECTIONS - SHEET 2 |
| FS-GA-0199 | DRILL HOLE WASH FAULT EXPLORATORY DRIFT PLANS AND SECTIONS |

### ASSOCIATED SPECIFICATIONS

| | |
|---|---|
| FS-SP-0204 | EXCAVATION FOR STATIONS, DRIFTS & ALCOVES |
| FS-SP-0205 | CONTROLLED DRILLING AND BLASTING |
| FS-SP-0208 | ROCK BOLTING |
| FS-SP-0215 | TEST DRILL: COMPRESSED AIR POWERED, SCREW FEED TYPE |
| FS-SP-0303 | CAST-IN-PLACE CONCRETE |
| FS-SP-0304 | GROUT, MATERIALS AND PLACEMENT |
| FS-SP-0307 | SHOTCRETE |
| FS-SP-0308 | SHAFT LINER CONCRETE |
| FS-SP-0501 | STRUCTURAL STEEL |
| FS-SP-0502 | MISCELLANEOUS STEEL |
| FS-SP-0503 | ANCHOR BOLTS AND EMBEDDED ITEMS |
| FS-SP-0504 | WELDING |
| FS-SP-0801 | UNDERGROUND FIRE DOORS |
| FS-SP-0802 | STOPPINGS, BULKHEADS AND REGULATORS |
| FS-SP-0902 | PAINTINGS - EQUIPMENT |
| FS-SP-1103 | SUBSURFACE MAINTENCE SHOP |
| FS-SP-1104 | PORTABLE CHEMICAL TOILETS |
| FS-SP-1105 | DRILL JUMBO |
| FS-SP-1106 | LHD VEHICLES |
| FS-SP-1107 | MINE SERVICE VEHICLE |
| FS-SP-1109 | MOBIL DUST COLLECTION UNITS |
| FS-SP-1408 | ES-1 CONVEYANCE |
| FS-SP-1409 | ES-2 MUCK LOADING SYSTEM |
| FS-SP-1410 | MONORAIL HOIST AND JIB CRANES |
| FS-SP-1411 | ES-2 CONVEYANCE |
| FS-SP-1413 | FIXED AND RETRACTABLE MUCK CHUTES |
| FS-SP-1418 | EMERGENCY ESCAPE HOIST |
| FS-SP-1500 | GENERAL REQUIREMENTS, MECHANICAL |
| FS-SP-1501 | PIPE AND FITTINGS |
| FS-SP-1505 | AUXILIARY MINE VENTILATION FANS |
| FS-SP-1506 | VENTILATION DUCTING |
| FS-SP-1507 | VALVES |
| FS-SP-1509 | CONTROL & MONITORING OF MECHANICAL UTILITIES |
| FS-SP-1510 | MINE WATER SUPPLY DISTRIBUTION SYSTEM |
| FS-SP-1511 | MINE WASTE WATER REMOVAL SYSTEM |
| FS-SP-1512 | COMPRESSED AIR SYSTEM |
| FS-SP-1513 | WASTE WATER PUMPS: MTL SUMP |
| FS-SP-1514 | GATHERING PUMPS: DIAPHRAGM |
| FS-SP-1515 | GATHERING PUMPS: CENTRIFUGAL |
| FS-SP-1517 | BOOSTER AIR COMPRESSOR UNIT |
| FS-SP-1518 | EMERGENCY EYEWASH STATION |
| FS-SP-1519 | HYDRONIC SPECIALTIES |

## UTILITIES - VENTILATION, WATER, WASTE WATER, COMPRESSED AIR

### DRAWINGS

| | |
|---|---|
| FS-GA-0225 | VENTILATION - SCHEMATIC FLOW DIAGRAM |
| FS-GA-0227 | VENTILATION SYSTEM, PHASE 1&2 FLOW DIAGRAM |
| FS-GA-0228 | VENTILATION SYSTEM, PHASE 3 FLOW DIAGRAM |
| FS-GA-0230 | SUBSURFACE MINE WATER SUPPLY SYSTEM SCHEMATIC FLOW DIAGRAM |
| FS-GA-0235 | SUBSURFACE MINE WASTE WATER COLLECTION SYSTEM SCHEMATIC FLOW DIAGRAM |
| FS-GA-0240 | COMPRESSED AIR SYSTEM SCHEMATIC FLOW DIAGRAM |
| FS-GA-0243 | SURFACE COMPRESSED AIR SYSTEM PLANS & ELEVATION |

### ASSOCIATED SPECIFICATIONS

| | |
|---|---|
| FS-SP-0201 | ES-1 AND ES-2 COLLAR INSTALLATION |
| FS-SP-0202 | SHAFT SINKING, ES-1 |
| FS-SP-0203 | SHAFT SINKING, ES-2 |
| FS-SP-0204 | EXCAVATION FOR STATIONS, DRIFTS & ALCOVES |
| FS-SP-0205 | CONTROLLED DRILLING AND BLASTING |
| FS-SP-0208 | ROCK BOLTING |
| FS-SP-0213 | TEST DRILL: ELECTROHYDRAULIC POWERED, COLUMN MOUNTED |
| FS-SP-0214 | TEST DRILL: ELECTROHYDRAULIC POWERED, TRACK MOUNTED |
| FS-SP-0215 | TEST DRILL: COMPRESSED AIR POWERED, SCREW FEED TYPE |
| FS-SP-0301 | FORMS, SHAFT LINER |
| FS-SP-0303 | CAST-IN-PLACE CONCRETE |
| FS-SP-0304 | GROUT, MATERIALS AND PLACEMENT |
| FS-SP-0307 | SHOTCRETE |
| FS-SP-0308 | SHAFT LINER CONCRETE |
| FS-SP-0501 | STRUCTURAL STEEL |
| FS-SP-0502 | MISCELLANEOUS STEEL |
| FS-SP-0503 | ANCHOR BOLTS AND EMBEDDED ITEMS |
| FS-SP-0504 | WELDING |
| FS-SP-0701 | SUMP LINERS |
| FS-SP-0801 | UNDERGROUND FIRE DOORS |
| FS-SP-0802 | STOPPINGS, BULKHEADS AND REGULATORS |
| FS-SP-0902 | PAINTING - EQUIPMENT |
| FS-SP-1500 | GENERAL REQUIREMENTS, MECHANICAL |
| FS-SP-1501 | PIPE AND FITTINGS |
| FS-SP-1504 | MAIN MINE VENTILATION FANS |
| FS-SP-1505 | AUXILIARY MINE VENTILATION FANS |
| FS-SP-1506 | VENTILATION DUCTING |
| FS-SP-1507 | VALVES |
| FS-SP-1509 | CONTROL & MONITORING OF MECHANICAL UTILITIES |
| FS-SP-1510 | MINE WATER SUPPLY DISTRIBUTION SYSTEM |
| FS-SP-1511 | MINE WASTE WATER REMOVAL SYSTEM |
| FS-SP-1512 | COMPRESSED AIR SYSTEM |
| FS-SP-1513 | WASTE WATER PUMPS: MTL SUMP |
| FS-SP-1514 | GATHERING PUMPS: DIAPHRAGM |
| FS-SP-1515 | GATHERING PUMPS: CENTRIFUGAL |
| FS-SP-1516 | ROTARY SCREW AIR COMPRESSORS |
| FS-SP-1517 | BOOSTER AIR COMPRESSOR UNIT |
| FS-SP-1518 | EMERGENCY EYEWASH STATION |
| FS-SP-1519 | HYDRONIC SPECIALTIES |
| FS-SP-1600 | GENERAL REQUIREMENTS, ELECTRICAL |
| FS-SP-1602 | ELECTRICAL MOTORS - 460 VOLT |

## ELECTRICAL, COMMUNICATION, INSTRUMENTATION

### DRAWINGS

| | |
|---|---|
| FS-GA-0200 | SURFACE ELECTRICAL ONE LINE SCHEMATIC DIAGRAM |
| FS-GA-0201 | SUBSURFACE ELECTRICAL - SHEET 1 ONE LINE SCHEMATIC DIAGRAM |
| FS-GA-0202 | SUBSURFACE ELECTRICAL - SHEET 2 ONE LINE SCHEMATIC DIAGRAM |
| FS-GA-0203 | SURFACE ELECTRICAL PLOT PLAN |
| FS-GA-0204 | SUBSURFACE ELECTRICAL PLOT PLAN |
| FS-GA-0205 | UDBR, ES-1 AND ES-2 B.O.S. ELECTRICAL PLOT PLAN |
| FS-GA-0206 | SUBSURFACE ELECTRICAL ARRANGEMENT TRANSFORMER & CONTROL |
| FS-GA-0207 | SUBSURFACE ELECTRICAL ARRANGEMENT TYPICAL DETAILS |
| FS-GA-0212 | HOIST & SIGNALLING SYSTEMS ONE LINE SCHEMATIC DIAGRAM |
| FS-GA-0213 | HOIST & SIGNALLING SYSTEMS ELEMENTARY CONTROL DIAGRAMS |
| FS-GA-0214 | HOIST CAGE FM RADIO SYSTEM SCHEMATIC & BLOCK DIAGRAM |
| FS-GA-0220 | AIR & WATER SYSTEMS - INSTRUMENTATION BLOCK DIAGRAMS |
| FS-GA-0221 | HOIST SYSTEMS - INSTRUMENTATION BLOCK DIAGRAMS |
| FS-GA-0222 | VENTILATION SYSTEM - INSTRUMENTATION BLOCK DIAGRAMS |

### ASSOCIATED SPECIFICATIONS

| | |
|---|---|
| FS-SP-1600 | GENERAL REQUIREMENTS, ELECTRICAL |
| FS-SP-1602 | ELECTRICAL MOTORS - 460 VOLT |
| FS-SP-1603 | ELECTRICAL MOTORS - 4160 VOLT |
| FS-SP-1604 | LIGHTING SYSTEMS |
| FS-SP-1605 | GROUND FAULT PROTECTION |
| FS-SP-1606 | BELL & BUZZER CORD SIGNALING SYSTEM |
| FS-SP-1607 | HOIST/CAGE RADIO COMMUNICATION SYSTEM |
| FS-SP-1609 | 4160/480V MTL MINE POWER CENTER |
| FS-SP-1611 | POWER DISTRIBUTION PANELS |
| FS-SP-1612 | ELECTRICAL CABLE |
| FS-SP-1613 | REMOTE CONTROL & MONITORING SYSTEMS |
| FS-SP-1614 | MOTOR CONTROL CENTER - 480V |
| FS-SP-1615 | PROGRAMMABLE LOGIC CONTROLLERS |
| FS-SP-1616 | GROUNDING & LIGHTNING PROTECTION SYSTEMS |
| FS-SP-1617 | SUBSURFACE AND SHAFT ELECTRIC DISTRIBUTION |
| FS-SP-1618 | MEDIUM VOLTAGE CONTROLS - 5KV |
| FS-SP-1619 | ELECTRICAL SHAFT HEATERS - 4.16KV |

SI APERTURE CARD

Also Available On Aperture Card

8901040172-17

QUALITY LEVELS OF THE ITEMS OR ACTIVITIES ON THIS DRAWING SHALL BE FOUND IN THE ESF QUALITY ASSURANCE LEVEL ASSIGNMENT SHEETS. (QALAS)

| ITEM | REQD | MATERIAL | DESCRIPTION | DWG. NO. |
|---|---|---|---|---|

**U.S. DEPARTMENT OF ENERGY**
NEVADA OPERATIONS OFFICE — LAS VEGAS, NEVADA

| APPROVALS | | DATE |
|---|---|---|
| DESIGN | JAH | 12-8-88 |
| DRAWN | AAS | 12-8-88 |
| CHECKED | J K | 12-8-88 |
| PROJ. DES. MGR. | B.CH. | 12-8-88 |
| Q.A.R. | FBH | 12-8-88 |
| PROJ. MGR. | TEJ | 12-8-88 |
| ACCEPTED YMPO | | 12-15-88 |

**FENIX & SCISSON, INC.**
LAS VEGAS, NEVADA

YUCCA MOUNTAIN PROJECT
EXPLORATORY SHAFT FACILITY
DRAWINGS BY DISCIPLINE &
**ASSOCIATED SPECIFICATIONS SH.2**

| W.B.S. NO. | DRAWING NO. | REV. |
|---|---|---|
| 1.2.6.7.2 | FS-GA-0008 | C |

| SCALE | DATE | |
|---|---|---|
| NONE | | SHEET 1 OF 1 |

| NO. | DATE | REVISION | DES. | DRN. | CHK. | P.D.M. | O.A.R. | P.M. | YMPO |
|---|---|---|---|---|---|---|---|---|---|

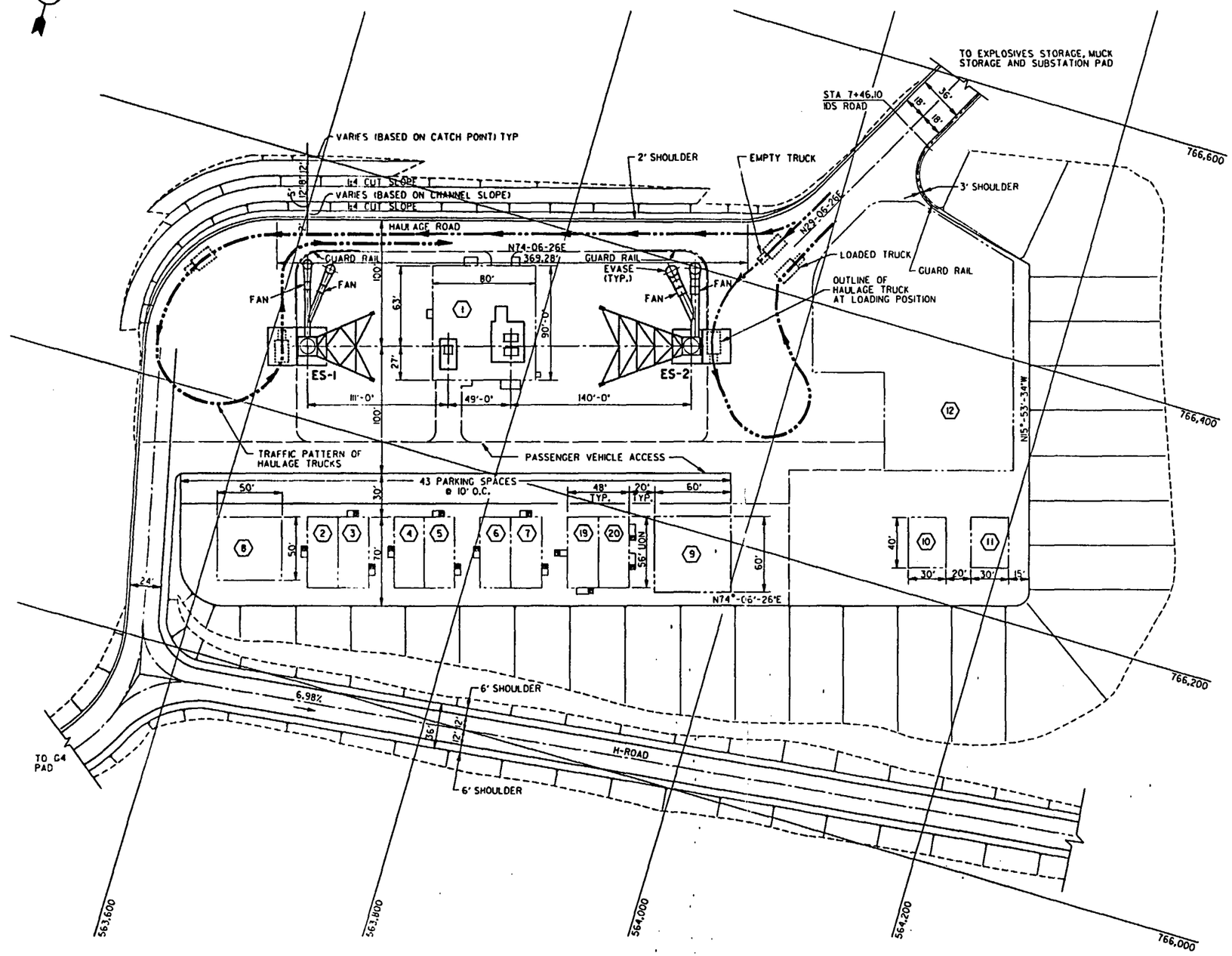


PLOT PLAN

1" = 40' 0 40 80 120 FT.

QUALITY LEVELS OF THE ITEMS OR ACTIVITIES ON THIS DRAWING SHALL BE FOUND IN THE ESF QUALITY ASSURANCE LEVEL ASSIGNMENT SHEETS. (QALAS)

## REFERENCE DRAWINGS

| | |
|---|---|
| FS-GA-0012 | ES-1 SURFACE, HEADFRAME - OPERATION SECTIONS |
| FS-GA-0013 | ES-1 SURFACE, HEADFRAME - OPERATION PLAN, ELEVATION & SECTION |
| FA-GA-0030 | ES-2 SURFACE, HEADFRAME - OPERATION SECTIONS |
| FS-GA-0031 | ES-2 SURFACE, HEADFRAME - OPERATION PLAN, ELEVATION & SECTION |
| FS-GA-0043 | ES-2 SURFACE, SHAFT COLLAR - SINKING SECTIONS |
| FS-GA-0045 | ES-1 & ES-2 SURFACE, HOIST HOUSE PLAN & SECTION |
| FS-GA-0243 | SURFACE COMPRESSED AIR SYSTEM PLANS & ELEVATION |
| JS-025-ESF-C4 | LAYOUT AND SITE PLAN (H & N) |

## LEGEND

1. HOIST HOUSE
2. LANL OFFICE
3. LLNL OFFICE
4. SNL/USGS OFFICE
5. SAIC OFFICE
6. H & N/F & S OFFICE
7. DOE/NRC/STATE OF NEVADA
8. IDS BUILDING
9. MEN'S CHANGE HOUSE/REECO SAFETY
10. SHOP
11. UNASSIGNED
12. SUBCONTRACTORS AREA
19. REECO TRAILER
20. REECO TRAILER

SI APERTURE CARD

Also Available On Aperture Card

8901040172-18

| ITEM | REQD | MATERIAL | DESCRIPTION | DWG. NO. |
|---|---|---|---|---|

**U.S. DEPARTMENT OF ENERGY**
NEVADA OPERATIONS OFFICE — LAS VEGAS, NEVADA

| APPROVALS | | DATE |
|---|---|---|
| DESIGN | IAL | 12-7-88 |
| DRAWN | D.B. | 12-7-88 |
| CHECKED | J.A.H | 12-8-88 |
| PROJ. DES. MGR. | B.CH. | 12-8-88 |
| Q.A.R. | PBH | 12-6-88 |
| PROJ. MGR. | 712 | 12-8-88 |
| ACCEPTED THPO | [illegible] | 12-13-88 |

**FENIX & SCISSON, INC.**
LAS VEGAS, NEVADA

YUCCA MOUNTAIN PROJECT
EXPLORATORY SHAFT FACILITY
SURFACE
**PLOT PLAN**

| W.B.S. NO. | DRAWING NO. | REV. |
|---|---|---|
| 1.2.6.7.2 | FS-GA-0011 | C |
| SCALE 1"=40' | DATE | SHEET 1 OF 1 |

| NO. | DATE | REVISION | DES. | DRN. | CHK. | P.D.M. | O.A.R. | P.M. | YMPO |
|---|---|---|---|---|---|---|---|---|---|

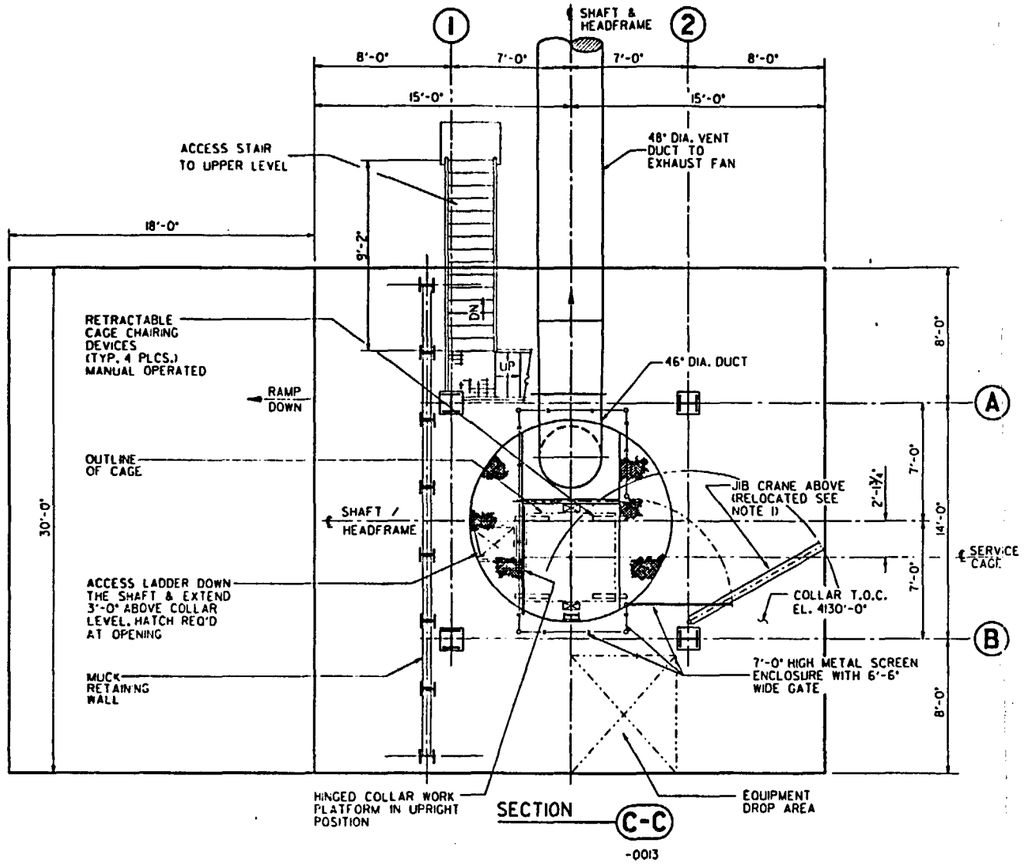


SECTION C-C
-0013

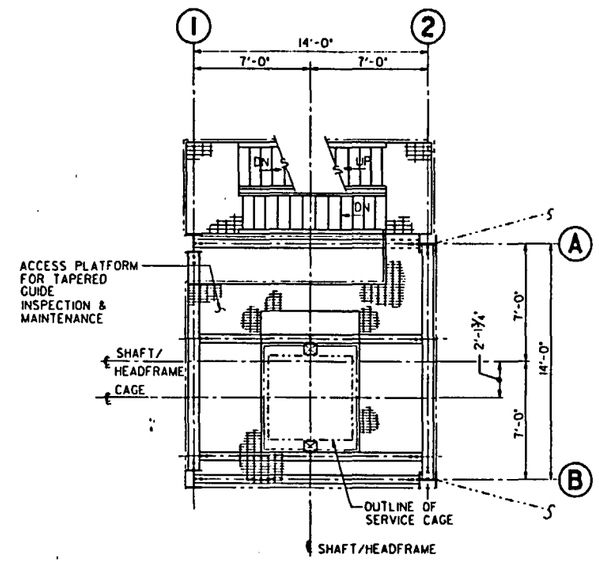


SECTION D-D
-0013

## NOTE

1. JIB CRANE SHALL BE PROVIDED WITH A LOCKING DEVICE. CRANE SHALL REMAIN IN LOCKED POSITION AT ALL TIMES WHEN NOT IN USE.

## REFERENCE DRAWINGS

| | |
|---|---|
| FS-GA-0011 | SURFACE PLOT PLAN |
| FS-GA-0013 | ES-1 SURFACE, HEADFRAME - OPERATION PLAN, ELEVATION & SECTION |
| FS-GA-0025 | ES-1 SURFACE, SHAFT COLLAR - OPERATION PLANS & SECTION |

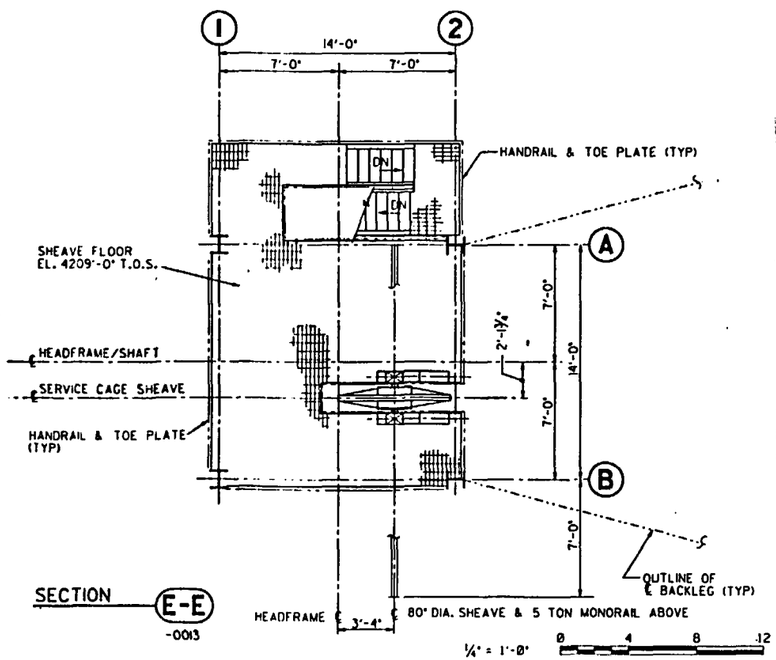


SECTION E-E
-0013

¼" = 1'-0"  0 4 8 12 FT.

QUALITY LEVELS OF THE ITEMS OR ACTIVITIES ON THIS DRAWING SHALL BE FOUND IN THE ESF QUALITY ASSURANCE LEVEL ASSIGNMENT SHEETS. (QALAS)

SI APERTURE CARD

Also Available On Aperture Card

8901040172-19

| ITEM | REQD | MATERIAL | DESCRIPTION | DWG. NO. |
|---|---|---|---|---|

**U.S. DEPARTMENT OF ENERGY**
NEVADA OPERATIONS OFFICE — LAS VEGAS, NEVADA

| APPROVALS | | DATE |
|---|---|---|
| DESIGN | [illegible] | [illegible] |
| DRAWN | D.L.C | [illegible] |
| CHECKED | JAH | [illegible] |
| PROJ. ENG. MGR. | B.C.H. | [illegible] |
| Q.A.R. | A. ALI | [illegible] |
| PROJ. MGR. | [illegible] | [illegible] |
| ACCEPTED YMPO | [illegible] | [illegible] |

**FENIX & SCISSON, INC.**
LAS VEGAS, NEVADA

YUCCA MOUNTAIN PROJECT
EXPLORATORY SHAFT FACILITY
ES-1 SURFACE, HEADFRAME-OPERATION
**SECTIONS**

| W.B.S. NO. | DRAWING NO. | REV. |
|---|---|---|
| 1.2.6.4.2 | FS-GA-0012 | C |
| SCALE 1/4"=1'-0" | DATE | SHEET 1 OF 1 |

| NO. | DATE | REVISION | DES. | DRN. | CHK. | P.D.M. | Q.A.R. | P.M. | YMPO |
|---|---|---|---|---|---|---|---|---|---|

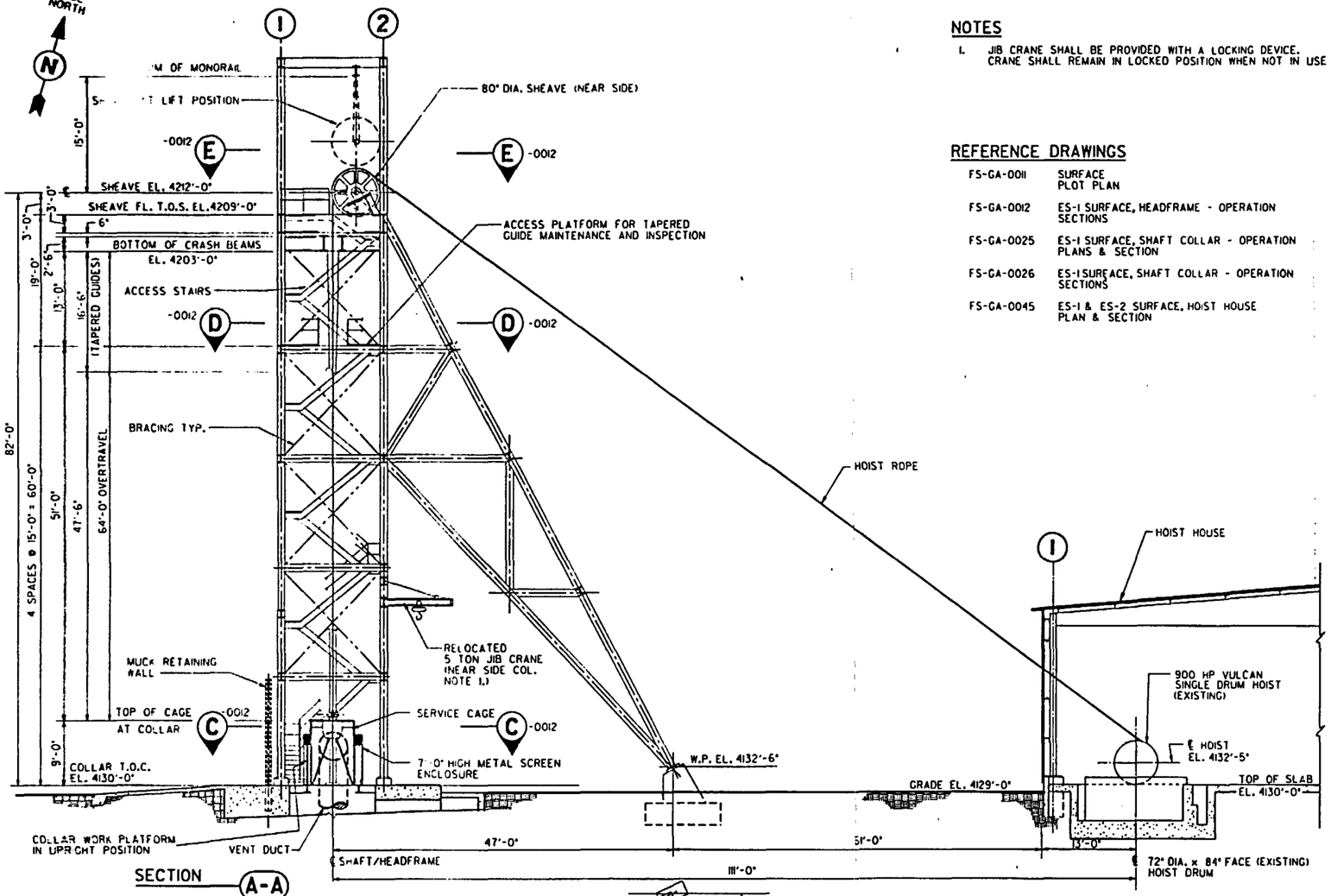


SECTION A-A

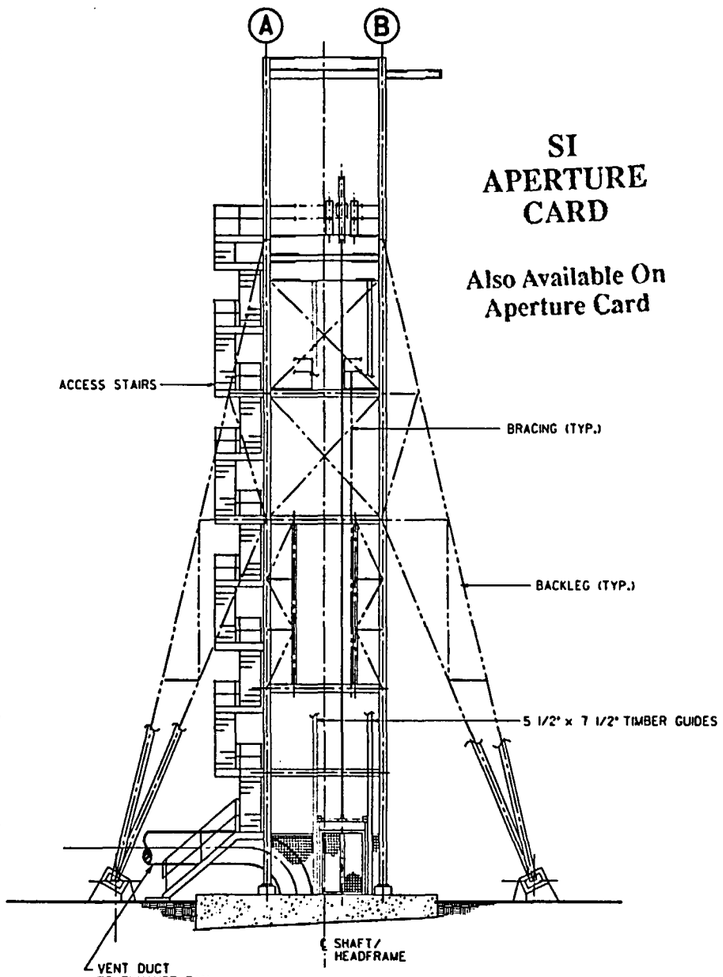


ELEVATION B

## NOTES

1. JIB CRANE SHALL BE PROVIDED WITH A LOCKING DEVICE. CRANE SHALL REMAIN IN LOCKED POSITION WHEN NOT IN USE

## REFERENCE DRAWINGS

| | |
|---|---|
| FS-GA-0011 | SURFACE PLOT PLAN |
| FS-GA-0012 | ES-1 SURFACE, HEADFRAME - OPERATION SECTIONS |
| FS-GA-0025 | ES-1 SURFACE, SHAFT COLLAR - OPERATION PLANS & SECTION |
| FS-GA-0026 | ES-1 SURFACE, SHAFT COLLAR - OPERATION SECTIONS |
| FS-GA-0045 | ES-1 & ES-2 SURFACE, HOIST HOUSE PLAN & SECTION |

SI APERTURE CARD

Also Available On Aperture Card

890104U172-2D

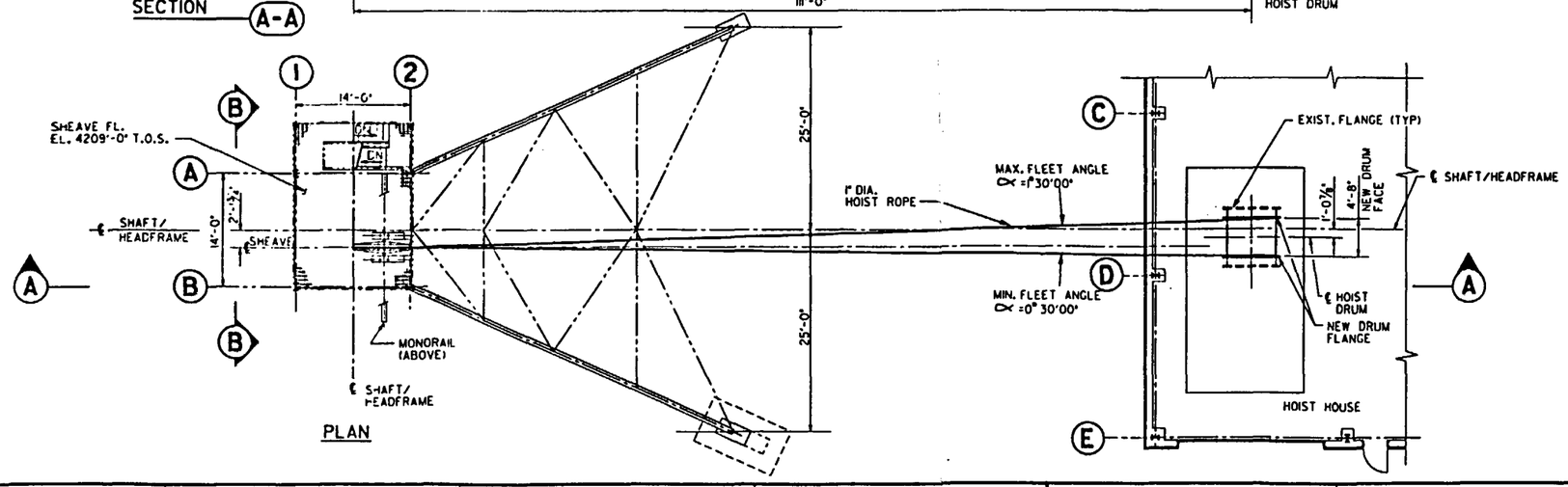


PLAN

QUALITY LEVELS OF THE ITEMS OR ACTIVITIES ON THIS DRAWING SHALL BE FOUND IN THE ESF QUALITY ASSURANCE LEVEL ASSIGNMENT SHEETS. (QALAS)

| ITEM | REQD | MATERIAL | DESCRIPTION | DWG. NO. |
|---|---|---|---|---|

**U.S. DEPARTMENT OF ENERGY**
NEVADA OPERATIONS OFFICE — LAS VEGAS, NEVADA

| APPROVALS | | DATE |
|---|---|---|
| DESIGN | [illegible] | 12-7-88 |
| DRAWN | D.L.C | 12-7-88 |
| CHECKED | JAU | 12-8-88 |
| PROJ. DES. MGR. | B.CH. | 12-8-88 |
| Q.A.R. | A.ALI | 12-8-88 |
| PROJ. MGR. | [illegible] | 12-8-88 |
| ACCEPTED YMPO | [illegible] | 12-13-88 |

**FENIX & SCISSON, INC.**
LAS VEGAS, NEVADA

YUCCA MOUNTAIN PROJECT
EXPLORATORY SHAFT FACILITY
ES-1 SURFACE, HEADFRAME - OPERATION
**PLAN, ELEVATION & SECTION**

| W.B.S. NO. | DRAWING NO. | REV. |
|---|---|---|
| 1.2.6.4.2 | FS-GA-0013 | C |
| SCALE 1/8"=1'-0" | DATE | SHEET 1 OF 1 |

| NO. | DATE | REVISION | DES. | DRN. | CHK. | P.D.M. | O.A.R. | P.M. | YMPO |
|---|---|---|---|---|---|---|---|---|---|

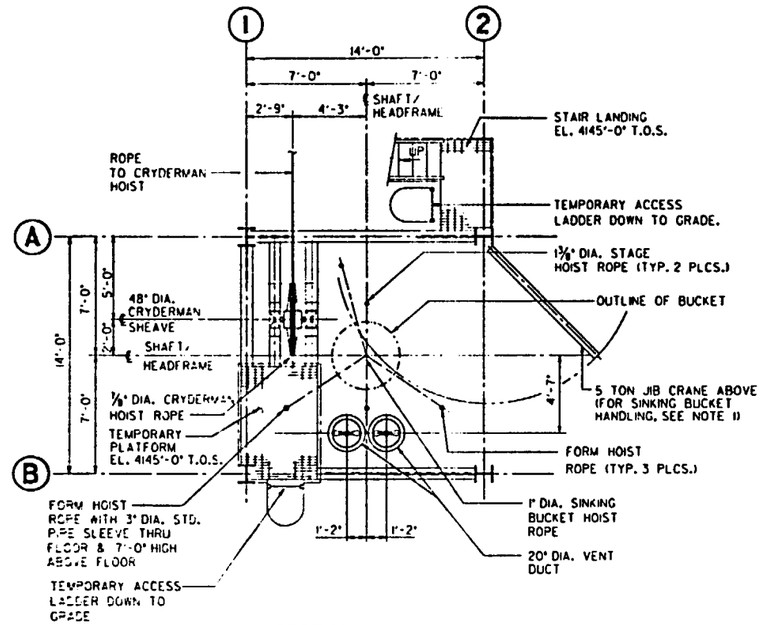


SECTION C-C
-0015

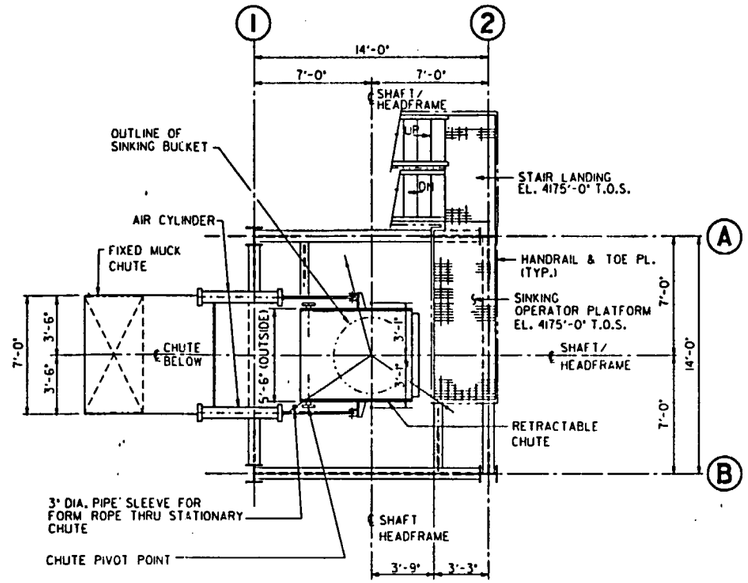


SECTION D-D
-0015

## NOTE

1. JIB CRANE SHALL BE PROVIDED WITH A LOCKING DEVICE. CRANE SHALL REMAIN IN LOCKED POSITION AT ALL TIMES WHEN NOT IN USE.

## REFERENCE DRAWINGS

| | |
|---|---|
| FS-GA-0015 | ES-1 SURFACE, HEADFRAME - SINKING ELEVATION & SECTION |
| FS-GA-0016 | ES-1 SURFACE, SINKING HOIST LOCATION PLAN |
| FS-GA-0027 | ES-1 SURFACE, SHAFT COLLAR - SINKING PLANS |
| FS-GA-0028 | ES-1 SURFACE, SHAFT COLLAR - SINKING SECTIONS |

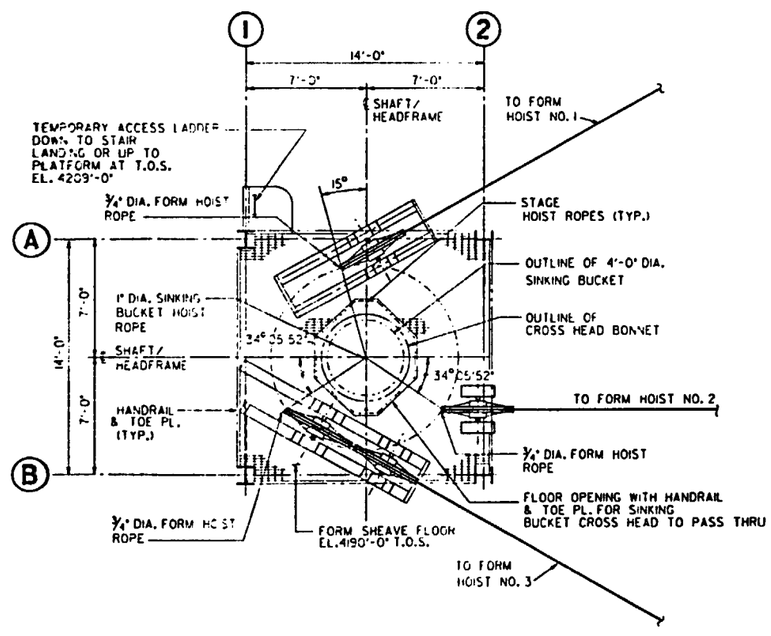


SECTION E-E
-0015

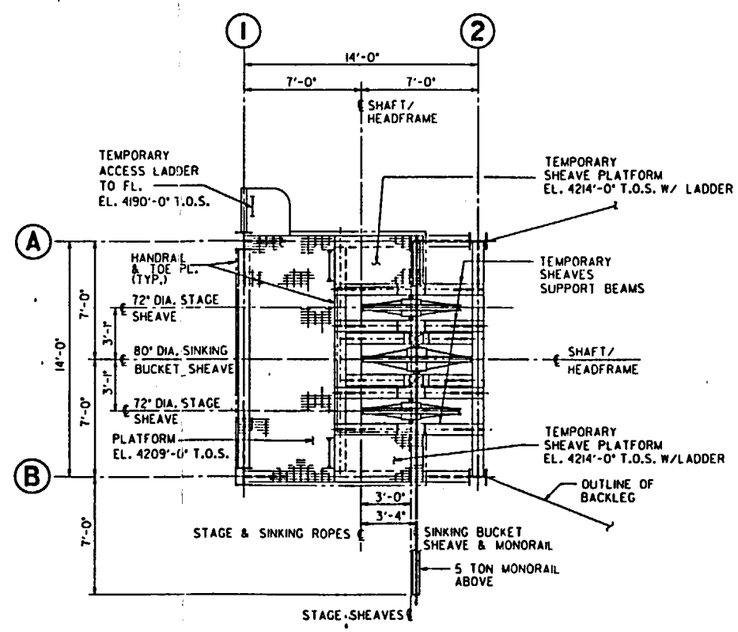


SECTION F-F
-0015

QUALITY LEVELS OF THE ITEMS OR ACTIVITIES ON THIS DRAWING SHALL BE FOUND IN THE ESF QUALITY ASSURANCE LEVEL ASSIGNMENT SHEETS. (QALAS)

¼" = 1'-0" 0 4 8 12 FT.

SI APERTURE CARD

Also Available On Aperture Card

8901040172-21

| ITEM | REQD | MATERIAL | DESCRIPTION | DWG. NO. |
|---|---|---|---|---|

**U.S. DEPARTMENT OF ENERGY**
NEVADA OPERATIONS OFFICE — LAS VEGAS, NEVADA

| APPROVALS | | DATE |
|---|---|---|
| DESIGN | [illegible] | 12-7-88 |
| DRAWN | H.D.G | 7-7-88 |
| CHECKED | J.A.H | 12-8-88 |
| PROJ. DES. MGR. | B.C.H. | 12-8-88 |
| O.A.R. | A.A.L. | 12-8-88 |
| PROJ. MGR. | [illegible] | 12-8-88 |
| ACCEPTED YMPO | [illegible] | 12-8-88 |

**FENIX & SCISSON, INC.**
LAS VEGAS, NEVADA

YUCCA MOUNTAIN PROJECT
EXPLORATORY SHAFT FACILITY
ES-1 SURFACE, HEADFRAME - SINKING
**SECTIONS**

| W.B.S. NO. | DRAWING NO. | REV. |
|---|---|---|
| 1.2.6.4.2 | FS-GA-0014 | C |
| SCALE 1/4"=1'-0" | DATE | SHEET 1 OF 1 |

| NO. | DATE | REVISION | DES. | DRN. | CHK. | P.D.M. | O.A.R. | P.M. | YMPO |
|---|---|---|---|---|---|---|---|---|---|

# SI APERTURE CARD

Also Available On Aperture Card

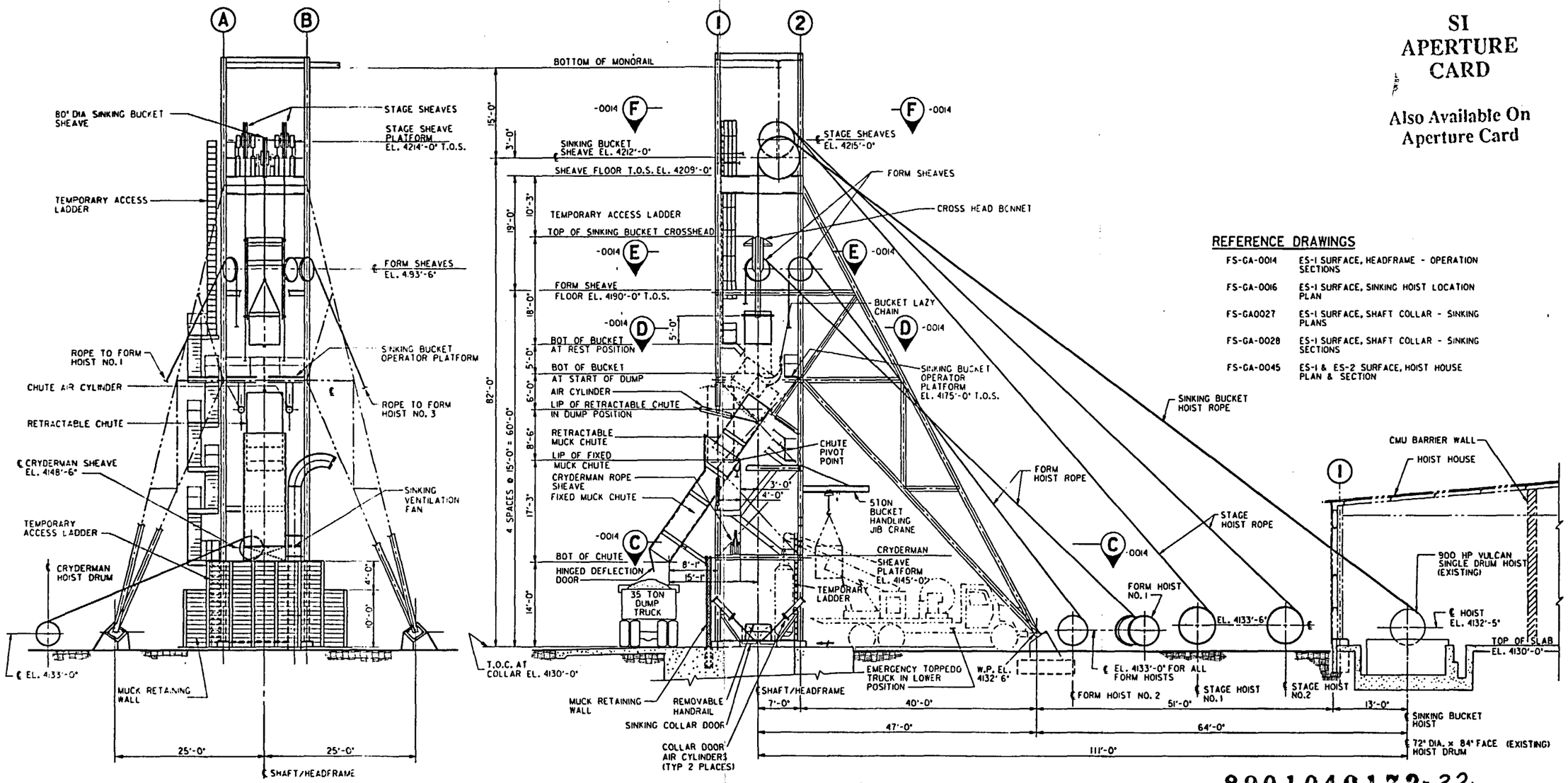


## REFERENCE DRAWINGS

| | |
|---|---|
| FS-GA-0014 | ES-1 SURFACE, HEADFRAME - OPERATION SECTIONS |
| FS-GA-0016 | ES-1 SURFACE, SINKING HOIST LOCATION PLAN |
| FS-GA0027 | ES-1 SURFACE, SHAFT COLLAR - SINKING PLANS |
| FS-GA-0028 | ES-1 SURFACE, SHAFT COLLAR - SINKING SECTIONS |
| FS-GA-0045 | ES-1 & ES-2 SURFACE, HOIST HOUSE PLAN & SECTION |

ELEVATION (A) -0016

SECTION (B-B) -0016

1/8" = 1'-0" 0 5 10 15 20 25 FT.

QUALITY LEVELS OF THE ITEMS OR ACTIVITIES ON THIS DRAWING SHALL BE FOUND IN THE ESF QUALITY ASSURANCE LEVEL ASSIGNMENT SHEETS. (QALAS)

8901040172-22

| ITEM | REQD | MATERIAL | DESCRIPTION | DWG. NO. |
|---|---|---|---|---|

**U.S. DEPARTMENT OF ENERGY**
NEVADA OPERATIONS OFFICE — LAS VEGAS, NEVADA

| APPROVALS | | DATE |
|---|---|---|
| DESIGN | [illegible] | 12-7-88 |
| DRAWN | A.A.S | 9-27-88 |
| CHECKED | J.A.H | 12-8-88 |
| PROJ. DES. MGR. | B.C.M. | 12-8-88 |
| O.A.R. | A.M. | 12-8-88 |
| PROJ. MGR. | [illegible] | 12-8-88 |
| ACCEPTED YMPO | [illegible] | 12-15-88 |

**FENIX & SCISSON, INC.**
LAS VEGAS, NEVADA

YUCCA MOUNTAIN PROJECT
EXPLORATORY SHAFT FACILITY
ES-1 SURFACE, HEADFRAME - SINKING
**ELEVATION & SECTION**

| W.B.S. NO. | DRAWING NO. | REV. |
|---|---|---|
| 1.2.6.4.2 | FS-GA-0015 | C |
| SCALE 1/8"=1'-0" | DATE | SHEET 1 OF 1 |

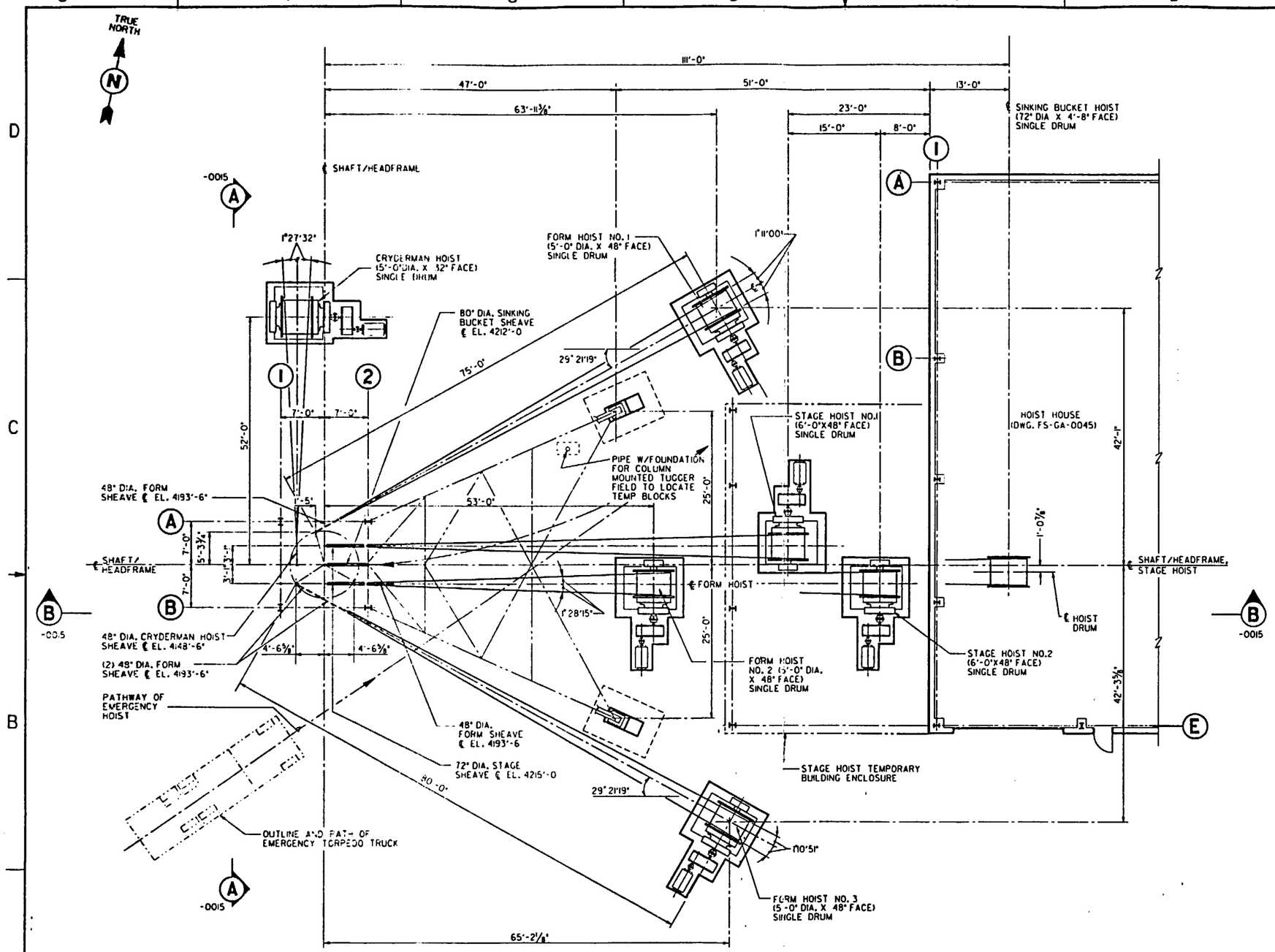


PLAN

1/8" = 1'-0" 0 5 10 15 20 25 FT.

QUALITY LEVELS OF THE ITEMS OR ACTIVITIES ON THIS DRAWING SHALL BE FOUND IN THE ESF QUALITY ASSURANCE LEVEL ASSIGNMENT SHEETS. (QALAS)

| NO. | DATE | REVISION | DES. | DRN. | CHK. | P.D.M. | Q.A.R. | P.M. | YMPO |
|---|---|---|---|---|---|---|---|---|---|

## REFERENCE DRAWINGS

| | |
|---|---|
| FS-GA-0014 | ES-1 SURFACE HEADFRAME - SINKING SECTIONS |
| FS-GA-0015 | ES-1 SURFACE HEADFRAME - SINKING ELEVATION & SECTION |
| FS-GA-0027 | ES-1 SHAFT COLLAR - SINKING PLANS |
| FS-GA-0028 | ES-1 SHAFT COLLAR - SINKING SECTIONS |
| FS-GA-0045 | ES-1 & ES-2 SURFACE, HOIST HOUSE PLAN & SECTION |

SI APERTURE CARD

Also Available On Aperture Card

8901040172-23

| ITEM | REQD | MATERIAL | DESCRIPTION | DWG. NO. |
|---|---|---|---|---|

**U.S. DEPARTMENT OF ENERGY**
NEVADA OPERATIONS OFFICE — LAS VEGAS, NEVADA

| APPROVALS | | DATE |
|---|---|---|
| DESIGN | I.A.L. | 12-7-88 |
| DRAWN | M.P.F. | 12-8-88 |
| CHECKED | J.A.H. | 12-8-88 |
| PROJ. DES. MGR. | B.CH. | 12-8-88 |
| Q.A.R. | A.ALI | 12-8-88 |
| PROJ. MGR. | [illegible] | 12-8-88 |
| ACCEPTED THPO | [illegible] | 12-13-88 |

**FENIX & SCISSON, INC.**
LAS VEGAS, NEVADA

YUCCA MOUNTAIN PROJECT
EXPLORATORY SHAFT FACILITY
ES-1 SURFACE, SINKING HOIST LOCATION
**PLAN**

| W.B.S. NO. | DRAWING NO. | REV. |
|---|---|---|
| 1.2.6.4.2 | FS-GA-0016 | C |
| SCALE 1/8"=1'-0" | DATE | SHEET 1 OF 1 |

| NO. | DATE | REVISION | DES. | DRN. | CHK. | P.D.M. | Q.A.R. | P.M. | YMPO |
|---|---|---|---|---|---|---|---|---|---|

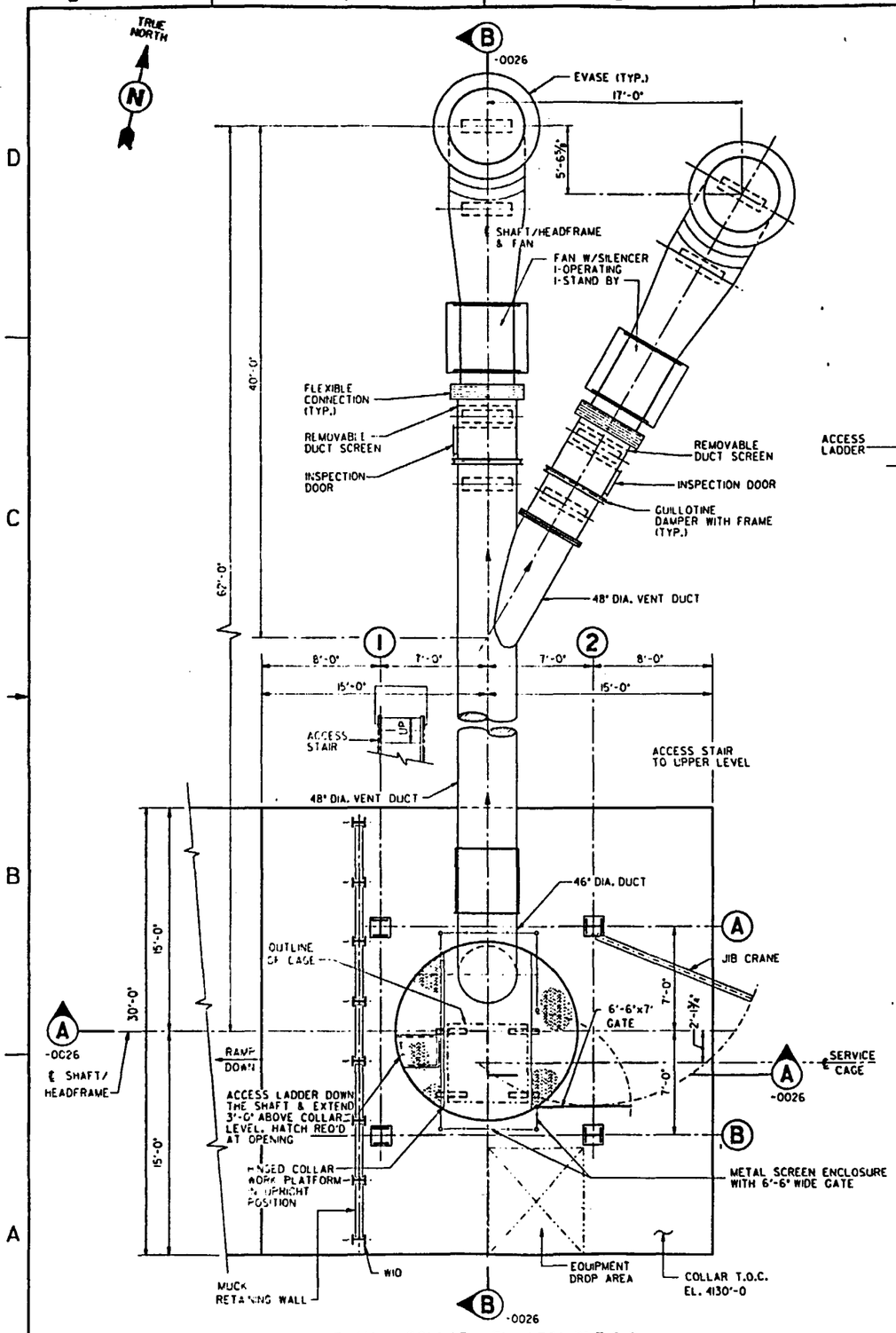


PLAN - COLLAR EL. 4130'-0" T.O.C.

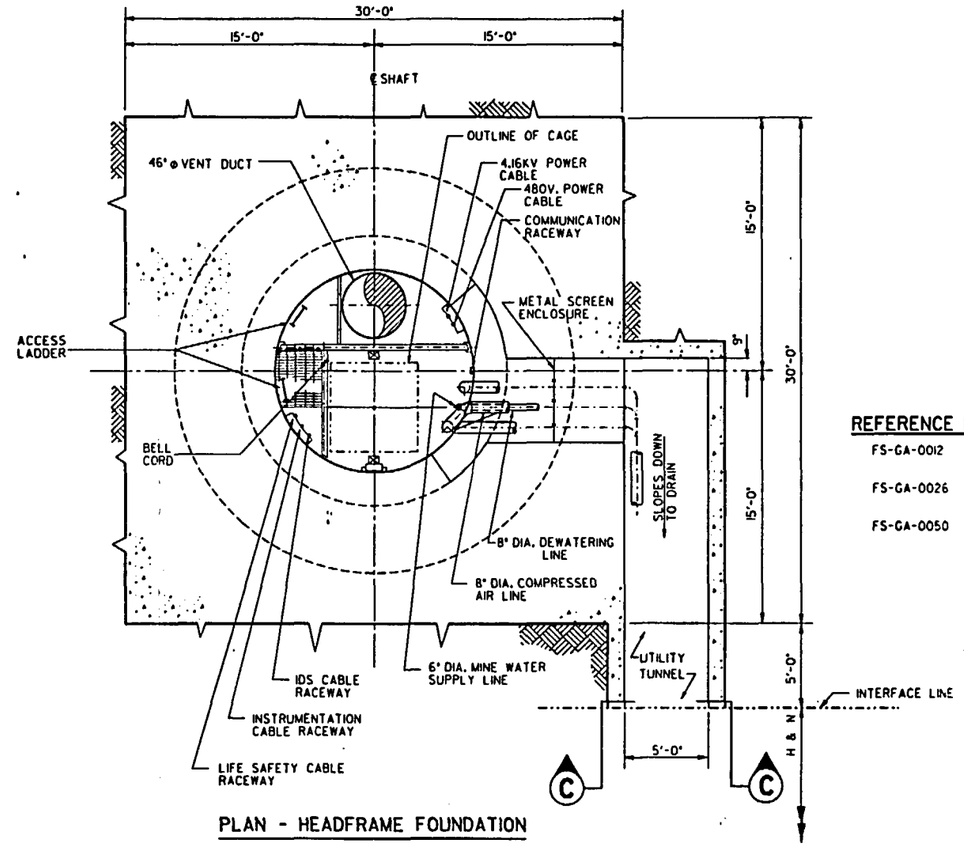


PLAN - HEADFRAME FOUNDATION

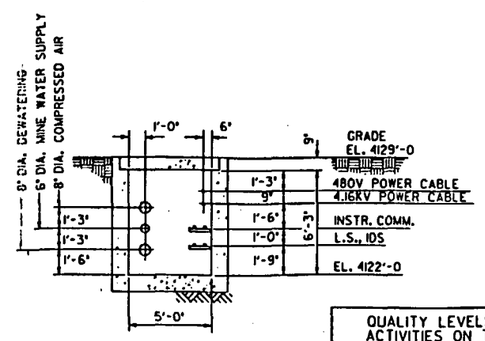


SECTION C-C

¼" = 1'-0" 0 4 8 12 FT.

QUALITY LEVELS OF THE ITEMS OR ACTIVITIES ON THIS DRAWING SHALL BE FOUND IN THE ESF QUALITY ASSURANCE LEVEL ASSIGNMENT SHEETS. (QALAS)

## REFERENCE DRAWINGS

| | |
|---|---|
| FS-GA-0012 | ES-1 SURFACE, HEADFRAME - OPERATION SECTIONS |
| FS-GA-0026 | ES-1 SURFACE, SHAFT COLLAR - OPERATION SECTIONS |
| FS-GA-0050 | ES-1 SHAFT, GENERAL ARRANGEMENT CROSS - SECTIONS |

SI APERTURE CARD

Also Available On Aperture Card

8901040172-24

| ITEM | REQD | MATERIAL | DESCRIPTION | DWG. NO. |
|---|---|---|---|---|

**U.S. DEPARTMENT OF ENERGY**
NEVADA OPERATIONS OFFICE — LAS VEGAS, NEVADA

| APPROVALS | | DATE |
|---|---|---|
| DESIGN | IAL | 12-7-88 |
| DRAWN | H.D.G | 12-7-88 |
| CHECKED | J.A.H | 12-8-88 |
| PROJ. DES. MGR. | B.CH | 12-8-88 |
| Q.A.R. | A.AL | 12-8-88 |
| PROJ. MGR. | TEJ | 12-7-88 |
| ACCEPTED THPD | [illegible] | 12-8-88 |

**FENIX & SCISSON, INC.**
LAS VEGAS, NEVADA

YUCCA MOUNTAIN PROJECT
EXPLORATORY SHAFT FACILITY
ES-1 SURFACE, SHAFT COLLAR - OPERATION
**PLANS & SECTIONS**

| W.B.S. NO. | DRAWING NO. | REV. |
|---|---|---|
| 1.2.6.3.2 | FS-GA-0025 | C |
| SCALE 1/4"=1'-0" | DATE | SHEET 1 OF 1 |

| NO. | DATE | REVISION | DES. | DRN. | CHK. | P.D.M. | C.A.R. | P.M. | YMPO |
|---|---|---|---|---|---|---|---|---|---|

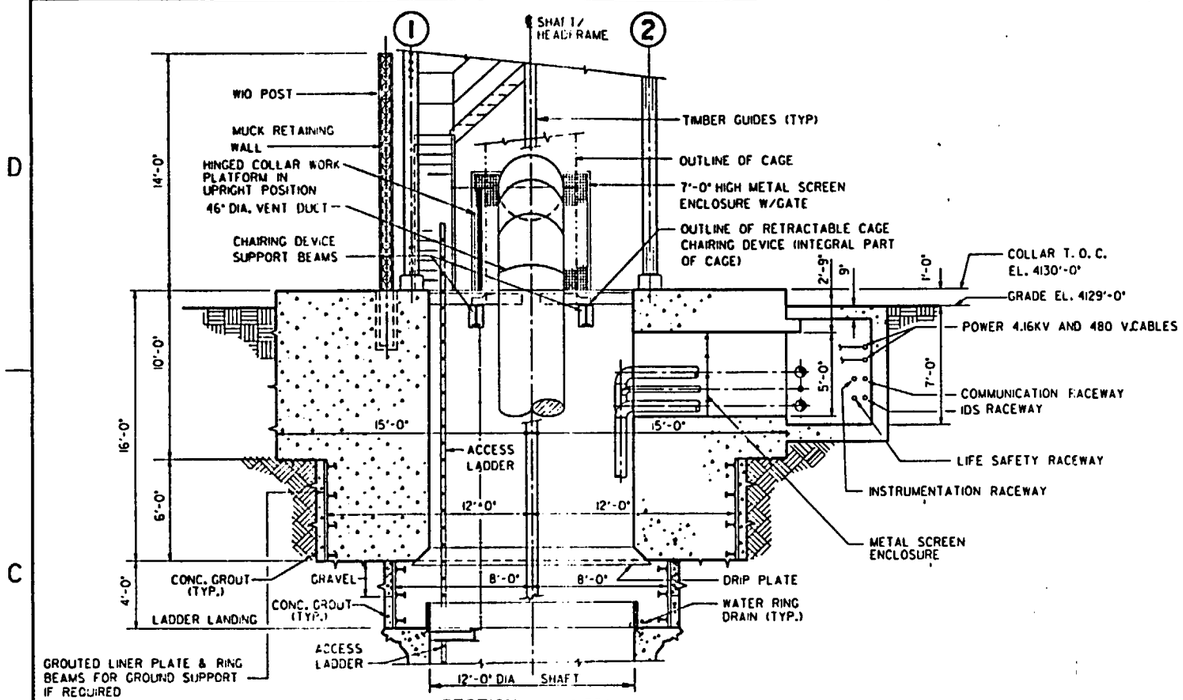


SECTION A-A -0025

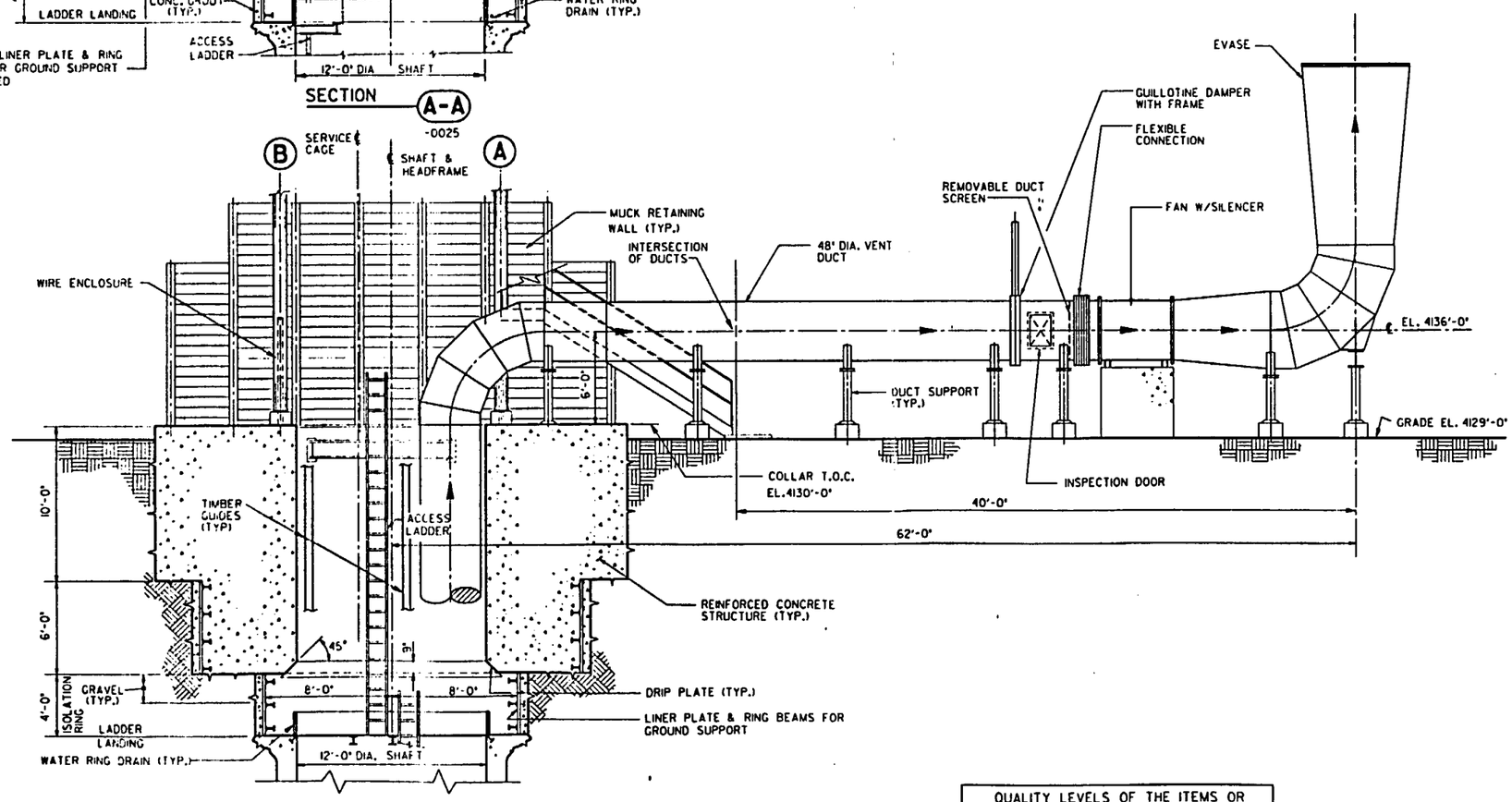


SECTION B-B -0025

¼" = 1'-0" 0 4 8 12 FT.

QUALITY LEVELS OF THE ITEMS OR ACTIVITIES ON THIS DRAWING SHALL BE FOUND IN THE ESF QUALITY ASSURANCE LEVEL ASSIGNMENT SHEETS. (QALAS)

## REFERENCE DRAWINGS

| | |
|---|---|
| FS-GA-0013 | ES-1 SURFACE, HEADFRAME - OPERATION PLAN, ELEVATION & SECTION |
| FS-GA-0025 | ES-1 SURFACE, SHAFT COLLAR - OPERATION PLANS & SECTIONS |

SI APERTURE CARD

Also Available On Aperture Card

8901040172-25

| ITEM | REQD | MATERIAL | DESCRIPTION | DWG. NO. |
|---|---|---|---|---|

**U.S. DEPARTMENT OF ENERGY**
NEVADA OPERATIONS OFFICE — LAS VEGAS, NEVADA

| APPROVALS | | DATE |
|---|---|---|
| DESIGN | [illegible] | 12-7-88 |
| DRAWN | H.D.G | 12-7-88 |
| CHECKED | J.A.H | 12-8-88 |
| PROJ. DES. MGR. | B.CH. | 12-8-88 |
| Q.A.R. | [illegible] | 12-8-88 |
| PROJ. MGR. | [illegible] | 12-9-88 |
| ACCEPTED TMPO | [illegible] | 12-13-88 |

**FENIX & SCISSON, INC.**
LAS VEGAS, NEVADA

YUCCA MOUNTAIN PROJECT
EXPLORATORY SHAFT FACILITY
ES-1 SURFACE, SHAFT COLLAR - OPERATION
**SECTIONS**

| W.B.S. NO. | DRAWING NO. | REV. |
|---|---|---|
| 1.2.6.4.1 | FS-GA-0026 | C |
| SCALE 1/4"=1'-0" | DATE | SHEET 1 OF 1 |

| NO. | DATE | REVISION | DES. | DRN. | CHK. | P.D.M. | Q.A.R. | P.M. | YMPO |
|---|---|---|---|---|---|---|---|---|---|

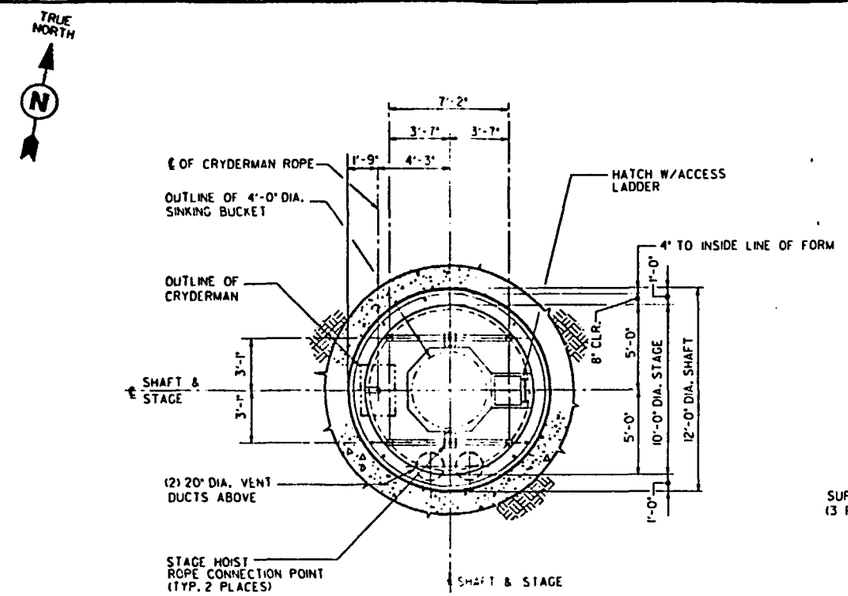


PLAN - TOP OF STAGE

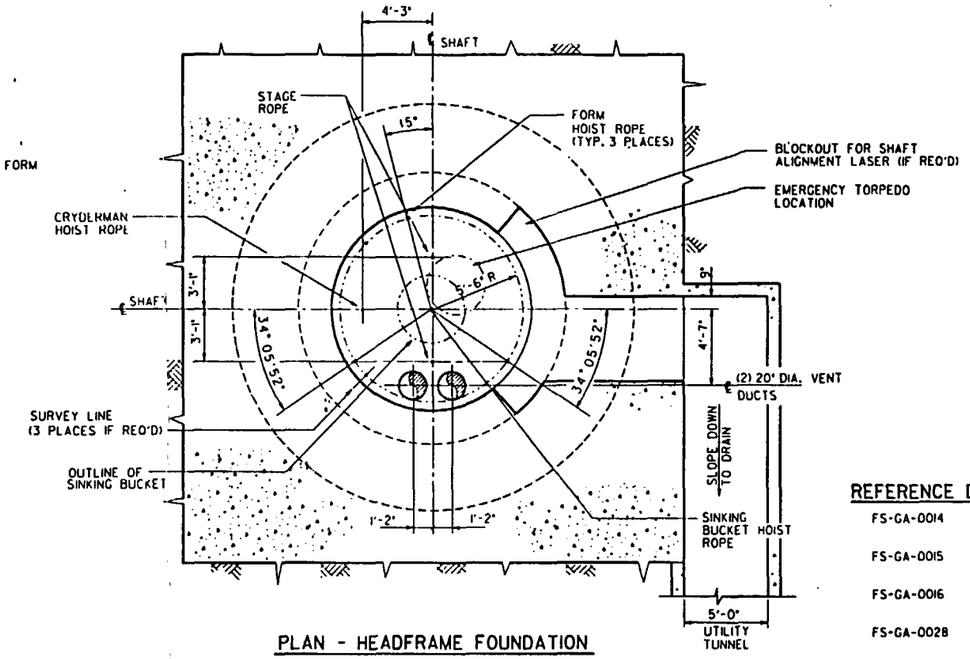


PLAN - HEADFRAME FOUNDATION

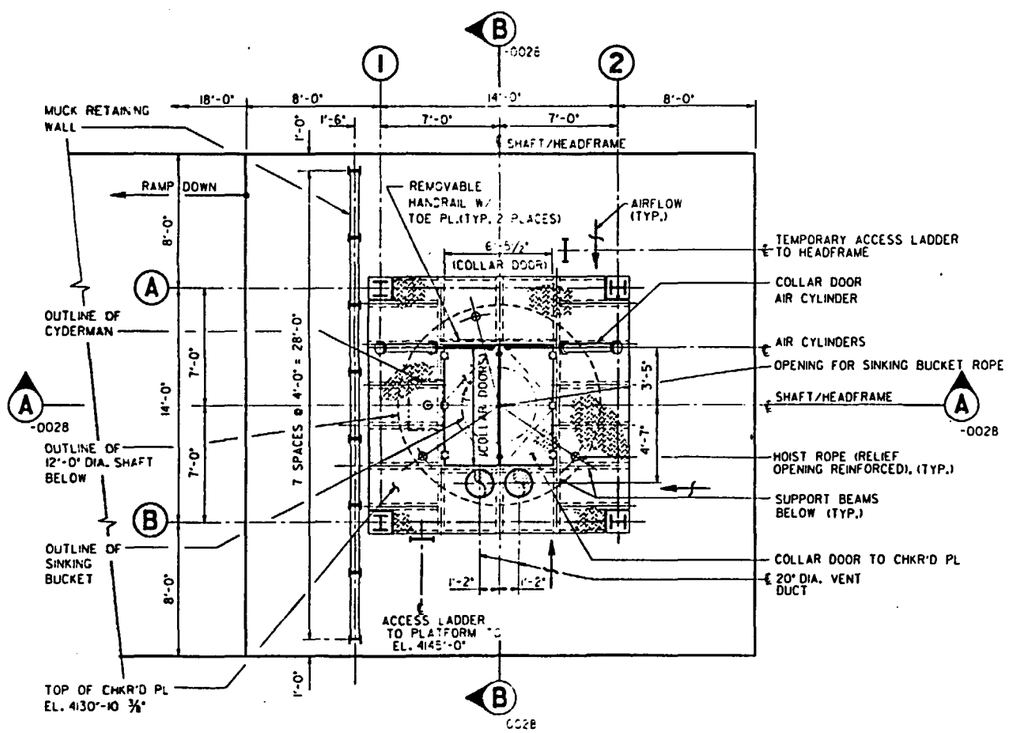


PLAN - COLLAR EL. 4130 T.O.C.

¼" = 1'-0" 0 4 8 12 FT.

QUALITY LEVELS OF THE ITEMS OR ACTIVITIES ON THIS DRAWING SHALL BE FOUND IN THE ESF QUALITY ASSURANCE LEVEL ASSIGNMENT SHEETS. (QALAS)

## REFERENCE DRAWINGS

| | |
|---|---|
| FS-GA-0014 | ES-I SURFACE, HEADFRAME - SINKING SECTIONS |
| FS-GA-0015 | ES-I SURFACE, HEADFRAME - SINKING ELEVATION & SECTION |
| FS-GA-0016 | ES-I SURFACE, SINKING HOIST LOCATION PLAN |
| FS-GA-0028 | ES-I SURFACE, SHAFT COLLAR - SINKING SECTIONS |
| FS-GA-0063 | ES-I SHAFT - CONCRETE FORM SECTION, PLANS & DETAIL |
| FS-GA-0072 | ES-I SHAFT SINKING STAGE ELEVATIONS & SECTIONS |

SI APERTURE CARD

Also Available On Aperture Card

8901040172-26

| ITEM | REQD | MATERIAL | DESCRIPTION | DWG. NO. |
|---|---|---|---|---|

**U.S. DEPARTMENT OF ENERGY**
NEVADA OPERATIONS OFFICE — LAS VEGAS, NEVADA

| APPROVALS | | DATE |
|---|---|---|
| DESIGN | IAL | 2-7-88 |
| DRAWN | H.D.G | 2-8-88 |
| CHECKED | J.A.H | 12-8-88 |
| PROJ. DES. MGR. | B.CH. | 12-8-88 |
| Q.A.R. | A.A.L. | 12-8-88 |
| PROJ. MGR. | TLT | 12-8-88 |
| ACCEPTED YMPO | | 12-13-88 |

**FENIX & SCISSON, INC.**
LAS VEGAS, NEVADA

YUCCA MOUNTAIN PROJECT
EXPLORATORY SHAFT FACILITY
ES-I SURFACE, SHAFT COLLAR - SINKING
**PLANS**

| W.B.S. NO. | DRAWING NO. | REV. |
|---|---|---|
| 1.2.6.4.1 | FS-GA-0027 | C |
| SCALE 1/4"=1'-0" | DATE | SHEET 1 OF 1 |

| NO. | DATE | REVISION | DES. | DRN. | CHK. | P.D.M. | O.A.R. | F.M. | YMPO |
|---|---|---|---|---|---|---|---|---|---|

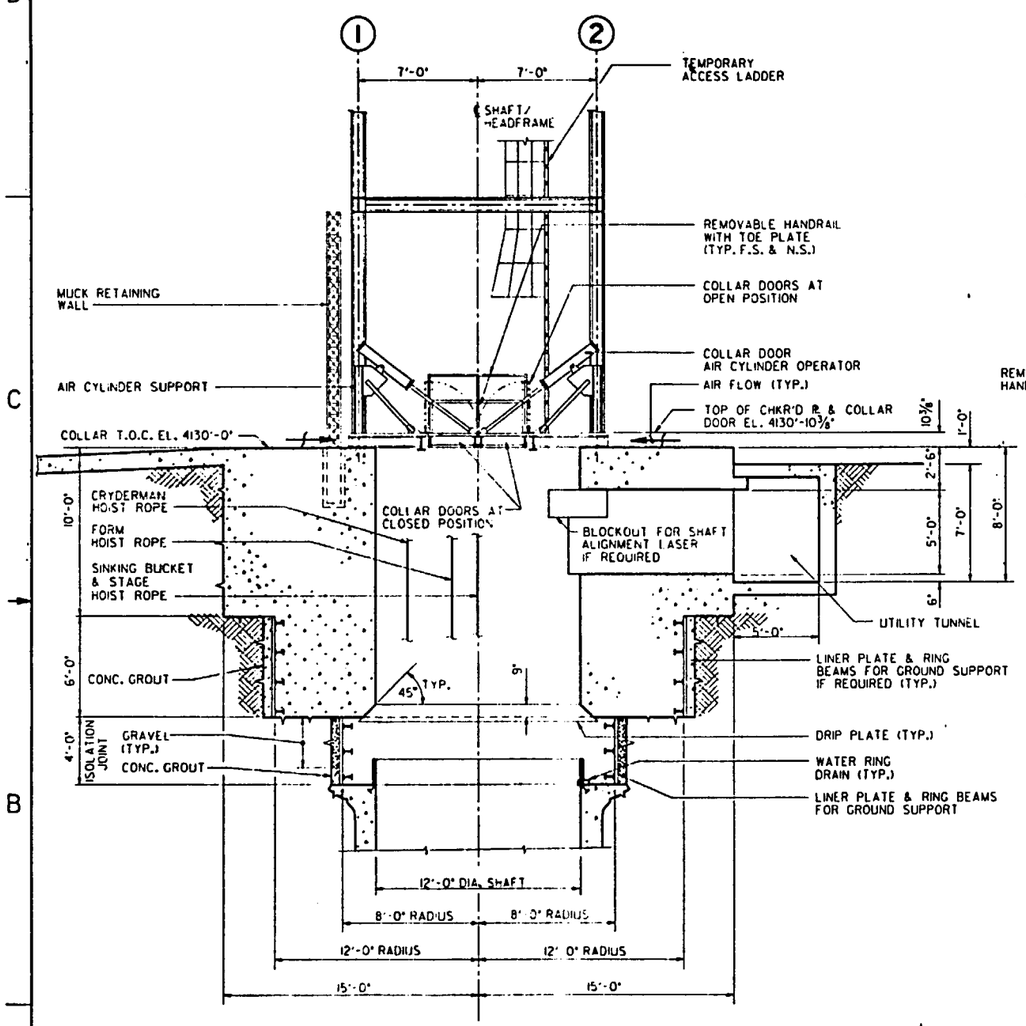


SECTION A-A
-0027

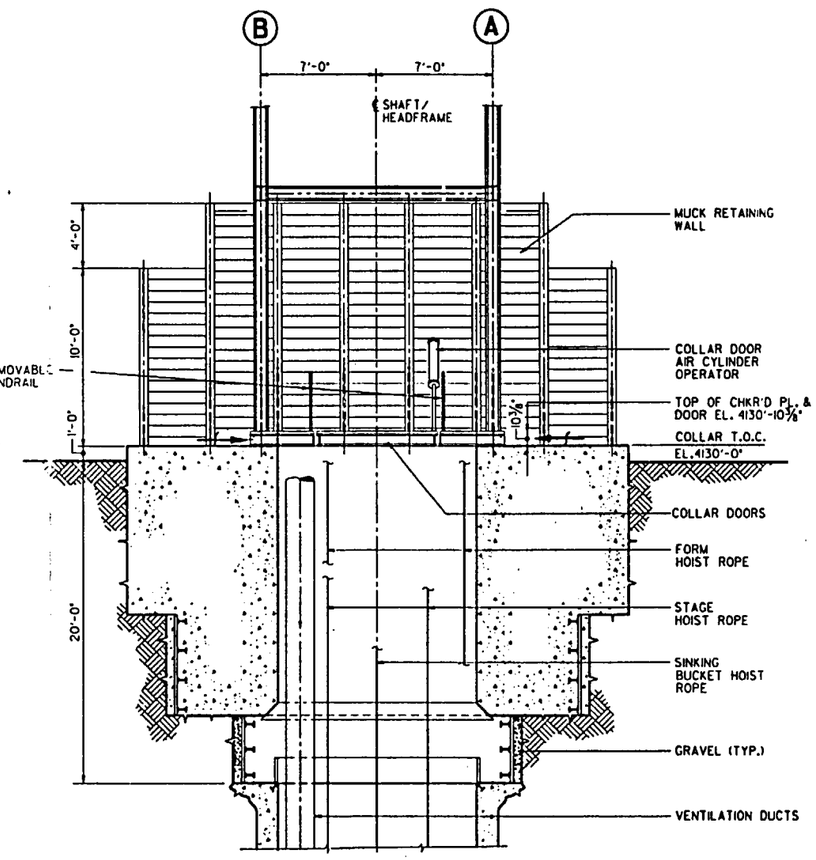


SECTION B-B
-0027

## REFERENCE DRAWINGS

| | |
|---|---|
| FS-GA-0014 | ES-1 SURFACE, HEADFRAME - SINKING SECTIONS |
| FS-GA-0015 | ES-1 SURFACE, HEADFRAME - SINKING ELEVATION & SECTION |
| FS-GA-0016 | ES-1 SURFACE, SINKING HOIST LOCATION PLAN |
| FS-GA-0027 | ES-1 SURFACE, SHAFT COLLAR - SINKING PLANS |

SI APERTURE CARD

Also Available On Aperture Card

8901040172-27

| ITEM | REQD | MATERIAL | DESCRIPTION | DWG. NO. |
|---|---|---|---|---|

**U.S. DEPARTMENT OF ENERGY**
NEVADA OPERATIONS OFFICE — LAS VEGAS, NEVADA

| APPROVALS | | DATE |
|---|---|---|
| DESIGN | [illegible] | 12-7-88 |
| DRAWN | M.P.F | 7-7-88 |
| CHECKED | J.A.L | 12-8-88 |
| PROJ. DES. MGR. | B.CH. | 12-8-88 |
| Q.A.R. | A.AL. | 12-8-88 |
| PROJ. MGR. | [illegible] | 12-8-88 |
| ACCEPTED THPO | [illegible] | 12-15-88 |

**FENIX & SCISSON, INC.**
LAS VEGAS, NEVADA

YUCCA MOUNTAIN PROJECT
EXPLORATORY SHAFT FACILITY
ES-1 SURFACE, SHAFT COLLAR - SINKING
**SECTIONS**

| W.B.S. NO. | DRAWING NO. | REV. |
|---|---|---|
| 1.2.6.4.1 | FS-GA-0028 | C |
| SCALE 1/4"=1'-0" | DATE | SHEET 1 OF 1 |

QUALITY LEVELS OF THE ITEMS OR ACTIVITIES ON THIS DRAWING SHALL BE FOUND IN THE ESF QUALITY ASSURANCE LEVEL ASSIGNMENT SHEETS. (QALAS)

¼" = 1'-0" 0 4 8 12 FT.

| NO. | DATE | REVISION | DES. | DRN. | CHK. | P.D.M. | O.A.R. | P.M. | YMPO |
|---|---|---|---|---|---|---|---|---|---|

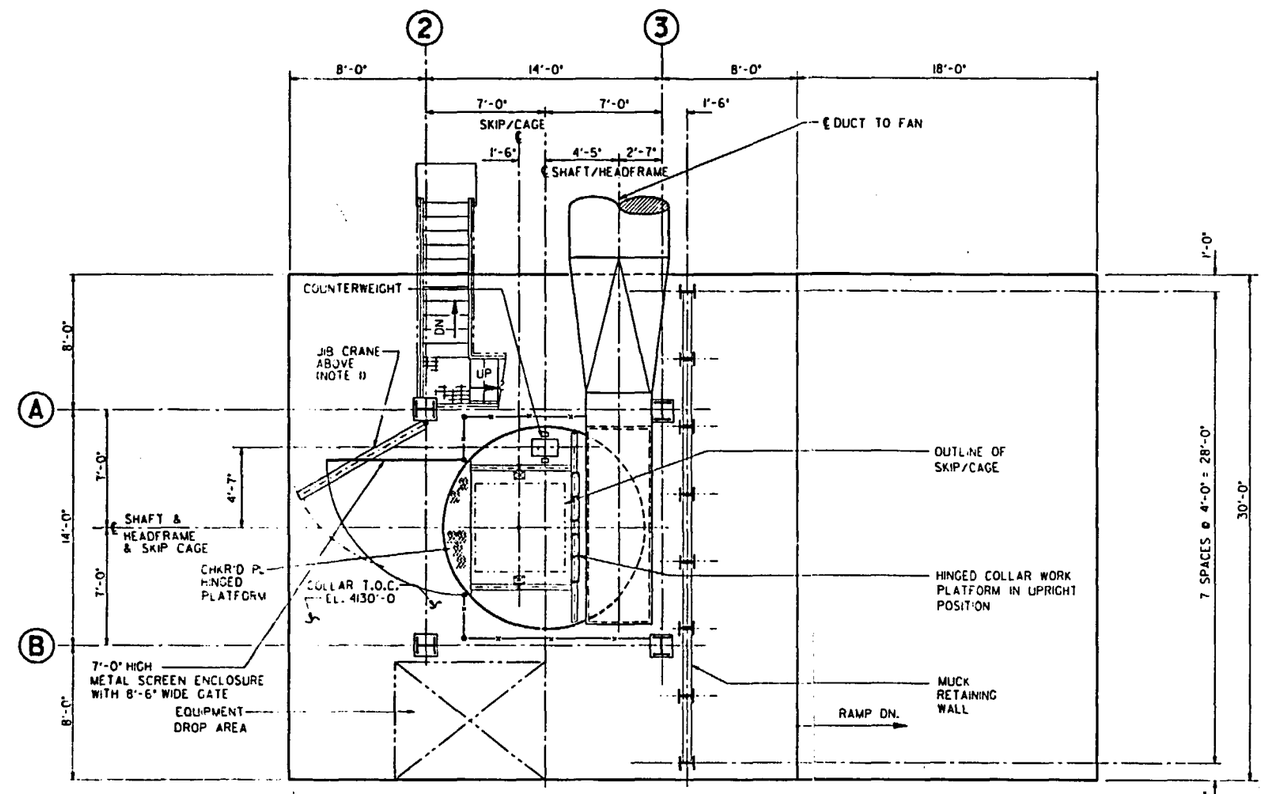


SECTION C-C -0031

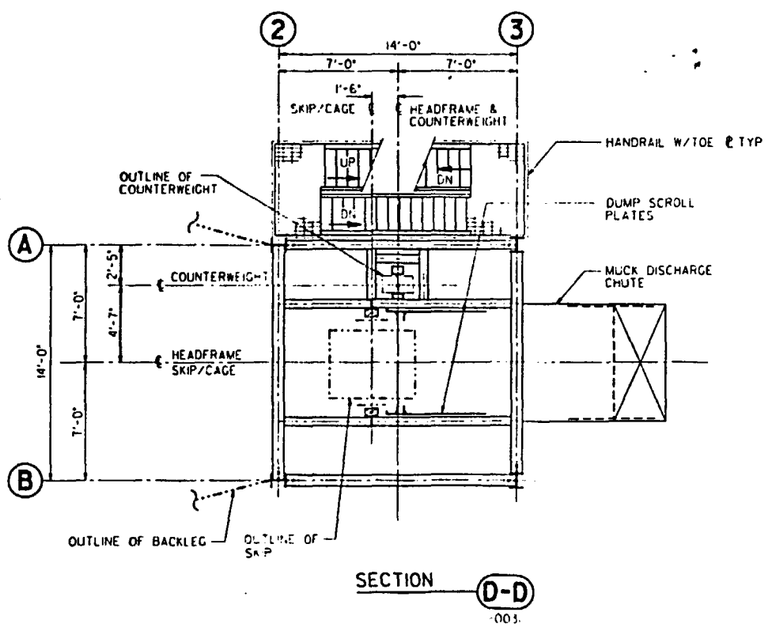


SECTION D-D -0031

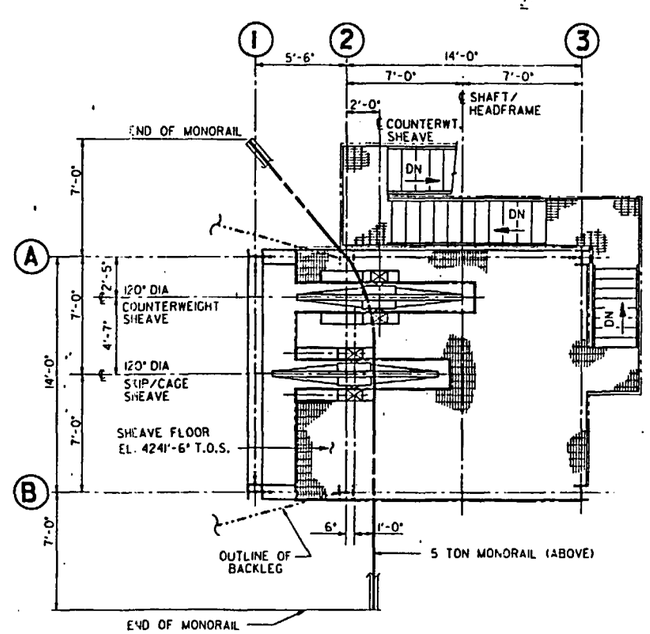


SECTION E-E -0031

1/4" = 1'-0" 0 4 8 12 FT.

## NOTE

1. JIB CRANE SHALL BE PROVIDED WITH A LOCKING DEVICE. CRANE SHALL REMAIN IN THE LOCKED POSITION AT ALL TIMES WHEN NOT IN USE.

## REFERENCE DRAWINGS

| | |
|---|---|
| FS-GA-0031 | ES-2 SURFACE, HEADFRAME - OPERATION PLAN, ELEVATION & SECTION |
| FS-GA-0040 | ES-2 SURFACE, SHAFT COLLAR - OPERATION PLANS & SECTION |
| FS-GA-0041 | ES-2 SURFACE, SHAFT COLLAR - OPERATION SECTIONS |

SI APERTURE CARD

Also Available On Aperture Card

8901040172-28

QUALITY LEVELS OF THE ITEMS OR ACTIVITIES ON THIS DRAWING SHALL BE FOUND IN THE ESF QUALITY ASSURANCE LEVEL ASSIGNMENT SHEETS. (QALAS)

| ITEM | REQD | MATERIAL | DESCRIPTION | DWG. NO. |
|---|---|---|---|---|

**U.S. DEPARTMENT OF ENERGY**
NEVADA OPERATIONS OFFICE — LAS VEGAS, NEVADA

| APPROVALS | | DATE |
|---|---|---|
| DESIGN | J.A.L. | 12-7-88 |
| DRAWN | D.B. | 9-7-88 |
| CHECKED | J.A.H. | 12-8-88 |
| PROJ. ENGR. | B.C.H. | 12-8-88 |
| Q.A.R. | R.A.U. | 12-8-88 |
| PROJ. MGR. | T.L.T. | 12-8-88 |
| ACCEPTED YMPO | | 12-13-88 |

**FENIX & SCISSON, INC.**
LAS VEGAS, NEVADA

YUCCA MOUNTAIN PROJECT
EXPLORATORY SHAFT FACILITY
ES-2 SURFACE, HEADFRAME - OPERATION
**SECTIONS**

| W.B.S. NO. | DRAWING NO. | REV. |
|---|---|---|
| 1.2.6.5.2 | FS-GA-0030 | C |
| SCALE 1/4"=1'-0" | DATE | SHEET 1 OF 1 |

QUALITY LEVELS OF THE ITEMS OR ACTIVITIES ON THIS DRAWING SHALL BE FOUND IN THE ESF QUALITY ASSURANCE LEVEL ASSIGNMENT SHEETS. (QALAS)

## NOTES

1. JIB CRANE SHALL BE PROVIDED WITH A LOCKING DEVICE. CRANE SHALL REMAIN IN LOCKED POSITION AT ALL TIMES WHEN NOT IN USE.

## REFERENCE DRAWINGS

| | |
|---|---|
| FS-GA-0011 | SURFACE PLOT PLAN |
| FS-GA-0030 | ES-2 SURFACE, HEADFRAME - OPERATION SECTIONS |
| FS-GA-0040 | ES-2 SURFACE, SHAFT COLLAR - OPERATION PLANS & SECTION |
| FS-GA-0041 | ES-2 SURFACE, SHAFT COLLAR - OPERATION SECTIONS |
| FS-GA-0045 | ES-1 & ES-2 SURFACE, HOIST HOUSE PLAN & SECTION |

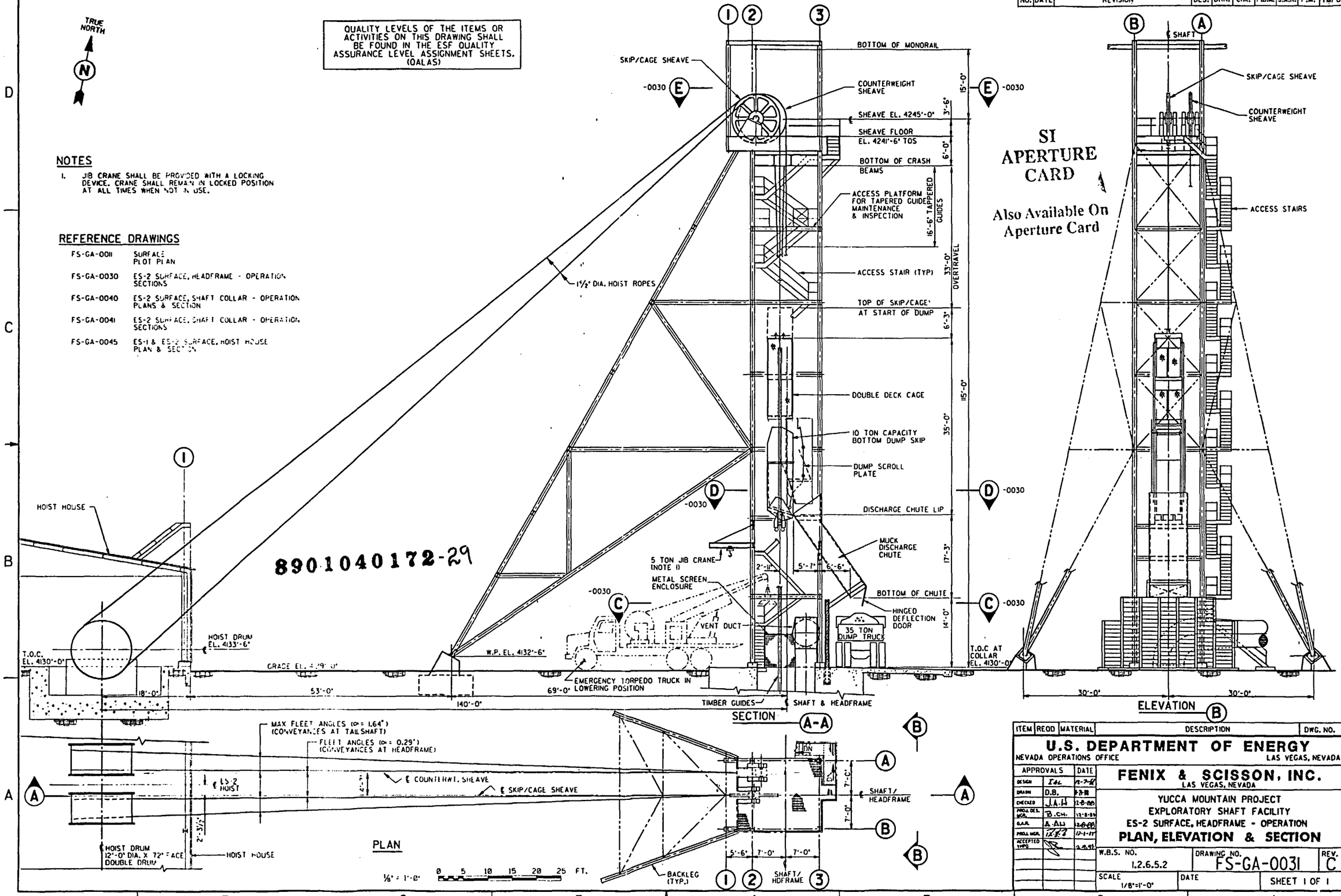


SI APERTURE CARD

Also Available On Aperture Card

8901040172-29

| NO. | DATE | REVISION | DES. | DRN. | CHK. | P.D.M. | Q.A.R. | P.M. | YMPO |
|---|---|---|---|---|---|---|---|---|---|

| ITEM | REQD | MATERIAL | DESCRIPTION | DWG. NO. |
|---|---|---|---|---|

**U.S. DEPARTMENT OF ENERGY**
NEVADA OPERATIONS OFFICE — LAS VEGAS, NEVADA

| APPROVALS | | DATE |
|---|---|---|
| DESIGN | I&L | 12-7-88 |
| DRAWN | D.B. | 12-7-88 |
| CHECKED | J.A.H. | 12-8-88 |
| PROJ. DES. MGR. | B.CH. | 12-8-88 |
| Q.A.R. | A.AU | 12-8-88 |
| PROJ. MGR. | [illegible] | 12-8-88 |
| ACCEPTED TYPO | [illegible] | 12-8-88 |

**FENIX & SCISSON, INC.**
LAS VEGAS, NEVADA

YUCCA MOUNTAIN PROJECT
EXPLORATORY SHAFT FACILITY
ES-2 SURFACE, HEADFRAME - OPERATION
**PLAN, ELEVATION & SECTION**

| W.B.S. NO. | DRAWING NO. | REV. |
|---|---|---|
| 1.2.6.5.2 | FS-GA-0031 | C |

| SCALE | DATE | SHEET 1 OF 1 |
|---|---|---|
| 1/8"=1'-0" | | |

| NO. | DATE | REVISION | DES. | DRN. | CHK. | P.D.M. | O.A.R. | P.M. | YMPO |
|---|---|---|---|---|---|---|---|---|---|

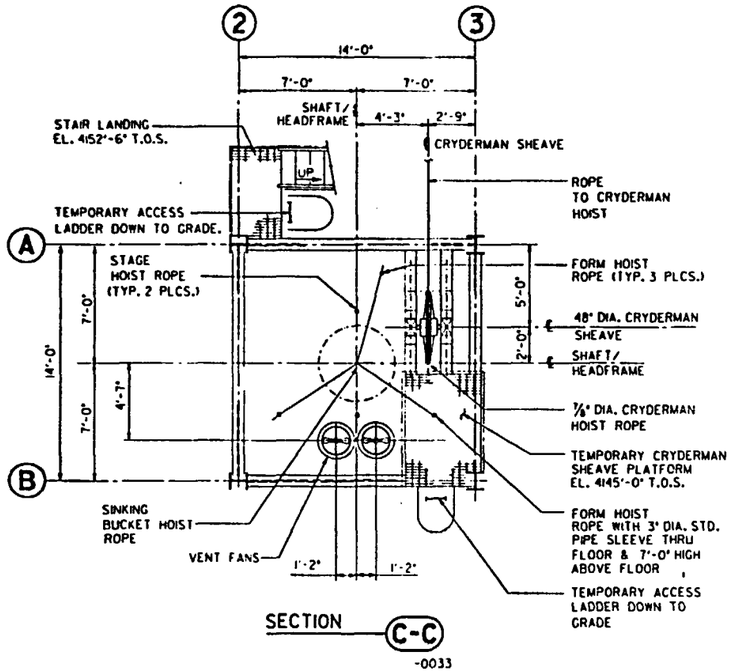


SECTION C-C
-0033

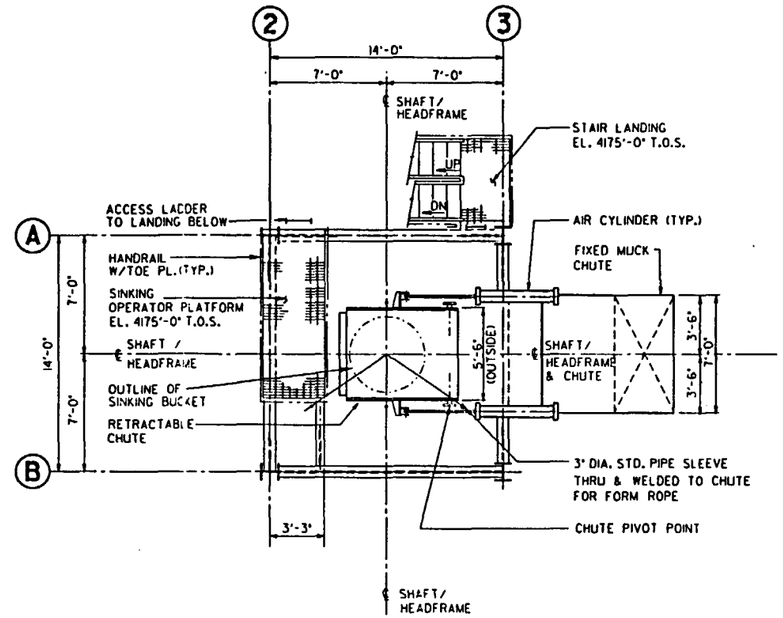


SECTION D-D
-0033

## REFERENCE DRAWINGS

| | |
|---|---|
| FS-GA-0033 | ES-2 SURFACE, HEADFRAME - SINKING ELEVATION & SECTION |
| FS-GA-0042 | ES-2 SURFACE, SHAFT COLLAR - SINKING PLANS |
| FS-GA-0043 | ES-2 SURFACE, SHAFT COLLAR - SINKING SECTIONS |

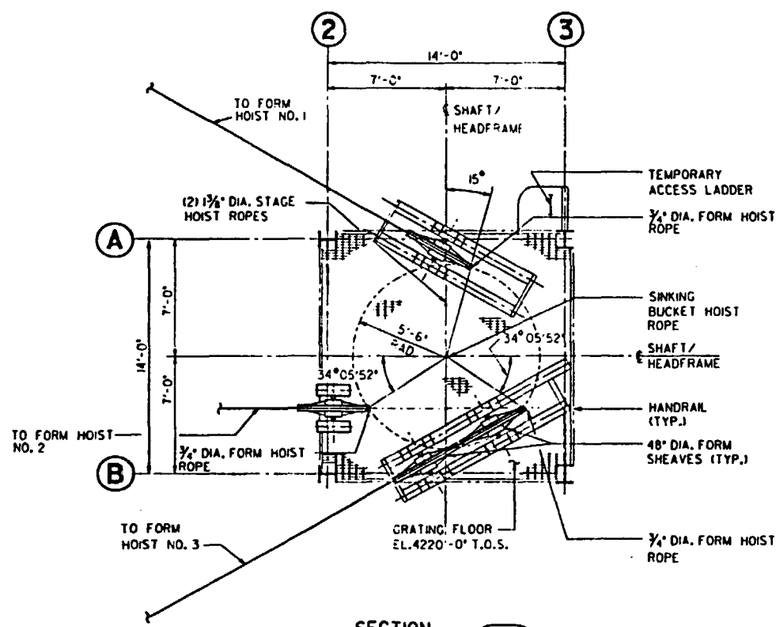


SECTION E-E
-0033

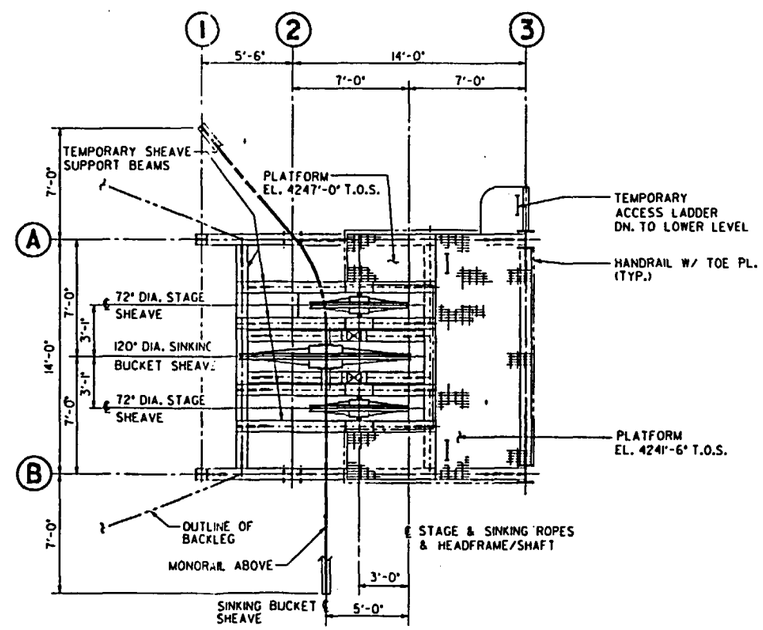


SECTION F-F
-0033

QUALITY LEVELS OF THE ITEMS OR ACTIVITIES ON THIS DRAWING SHALL BE FOUND IN THE ESF QUALITY ASSURANCE LEVEL ASSIGNMENT SHEETS. (OALAS)

1/4" = 1'-0" 0 4 8 12 FT.

SI APERTURE CARD

Also Available On Aperture Card

8901040172-3D

| ITEM | REQD | MATERIAL | DESCRIPTION | DWG. NO. |
|---|---|---|---|---|

**U.S. DEPARTMENT OF ENERGY**
NEVADA OPERATIONS OFFICE — LAS VEGAS, NEVADA

| APPROVALS | | DATE |
|---|---|---|
| DESIGN | [illegible] | 12-7-88 |
| DRAWN | H.D.G | 12-8-88 |
| CHECKED | J.A.H | 12-8-88 |
| PROJ. DES. MGR. | B.C.M. | 12-8-88 |
| O.A.R. | A.A.U | 12-8-88 |
| PROJ. MGR. | [illegible] | 12-8-88 |
| ACCEPTED YMPO | [illegible] | 12-13-88 |

**FENIX & SCISSON, INC.**
LAS VEGAS, NEVADA

YUCCA MOUNTAIN PROJECT
EXPLORATORY SHAFT FACILITY
ES-2 SURFACE, HEADFRAME - SINKING
**SECTIONS**

| W.B.S. NO. | DRAWING NO. | REV. |
|---|---|---|
| 1.2.6.5.2 | FS-GA-0032 | C |
| SCALE 1/4"=1'-0" | DATE | SHEET 1 OF 1 |

SI APERTURE CARD

Also Available On Aperture Card

## NOTE

1. JIB CRANE SHALL BE PROVIDED WITH A LOCKING DEVICE. CRANE SHALL REMAIN IN THE LOCKED POSITION AT ALL TIMES WHEN NOT IN USE.

## REFERENCE DRAWINGS

| | |
|---|---|
| FS-GA-0032 | ES-2 SURFACE, HEADFRAME - SINKING SECTIONS |
| FS-GA-0034 | ES-2 SURFACE, SINKING HOIST LOCATION PLAN |
| FS-GA-0042 | ES-2 SURFACE, SHAFT COLLAR - SINKING PLANS |
| FS-GA-0043 | ES-2 SURFACE, SHAFT COLLAR - SINKING SECTIONS |
| FS-GA-0045 | ES-1 & ES-2 SURFACE, HOIST HOUSE PLAN & SECTION |

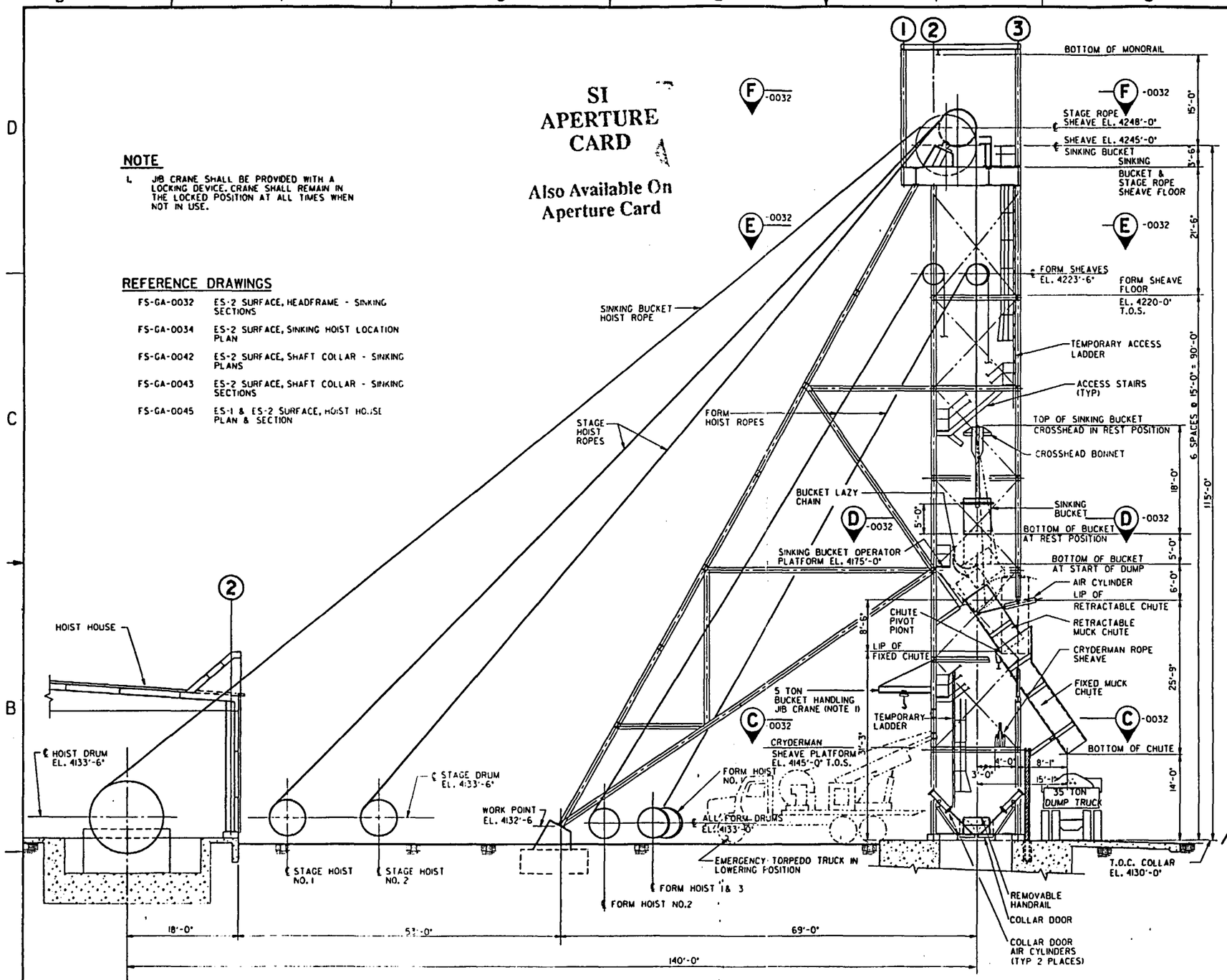


SECTION B-B -0034

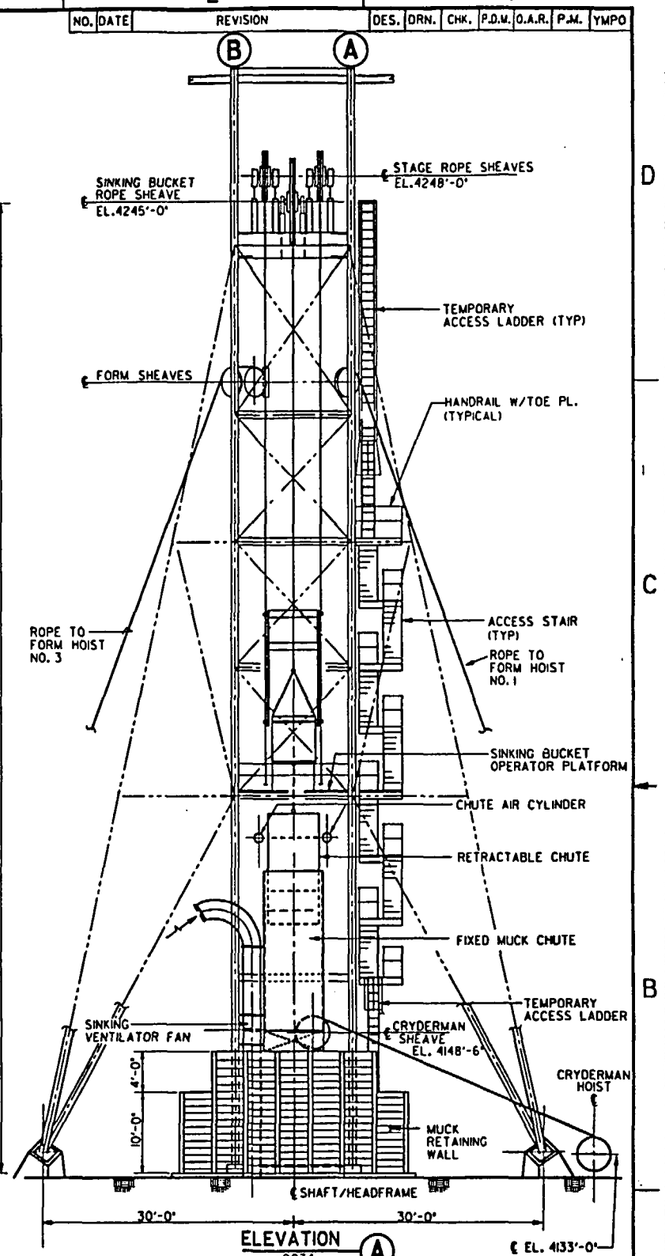


ELEVATION A -0034

8901040172-31

QUALITY LEVELS OF THE ITEMS OR ACTIVITIES ON THIS DRAWING SHALL BE FOUND IN THE ESF QUALITY ASSURANCE LEVEL ASSIGNMENT SHEETS. (QALAS)

1/8" = 1'-0" 0 5 10 15 20 25 FT.

| NO. | DATE | REVISION | DES. | DRN. | CHK. | P.D.M. | O.A.R. | P.M. | YMPO |
|---|---|---|---|---|---|---|---|---|---|

| ITEM | REQD | MATERIAL | DESCRIPTION | DWG. NO. |
|---|---|---|---|---|

**U.S. DEPARTMENT OF ENERGY**
NEVADA OPERATIONS OFFICE — LAS VEGAS, NEVADA

| APPROVALS | | DATE |
|---|---|---|
| DESIGN | JAL | 12-7-88 |
| DRAWN | D.B. | 9-27-88 |
| CHECKED | J.A.H | 12-8-88 |
| PROJ. DES. MGR. | B.CH. | 12-8-88 |
| Q.A.R. | A.Ali | 12-8-88 |
| PROJ. MGR. | TLT | 12-8-88 |
| ACCEPTED YMPO | | 12-15-88 |

**FENIX & SCISSON, INC.**
LAS VEGAS, NEVADA

YUCCA MOUNTAIN PROJECT
EXPLORATORY SHAFT FACILITY
ES-2 SURFACE, HEADFRAME - SINKING
**ELEVATION & SECTION**

| W.B.S. NO. | DRAWING NO. | REV. |
|---|---|---|
| 1.2.6.5.2 | FS-GA-0033 | C |
| SCALE 1/8"=1'-0" | DATE | SHEET 1 OF 1 |

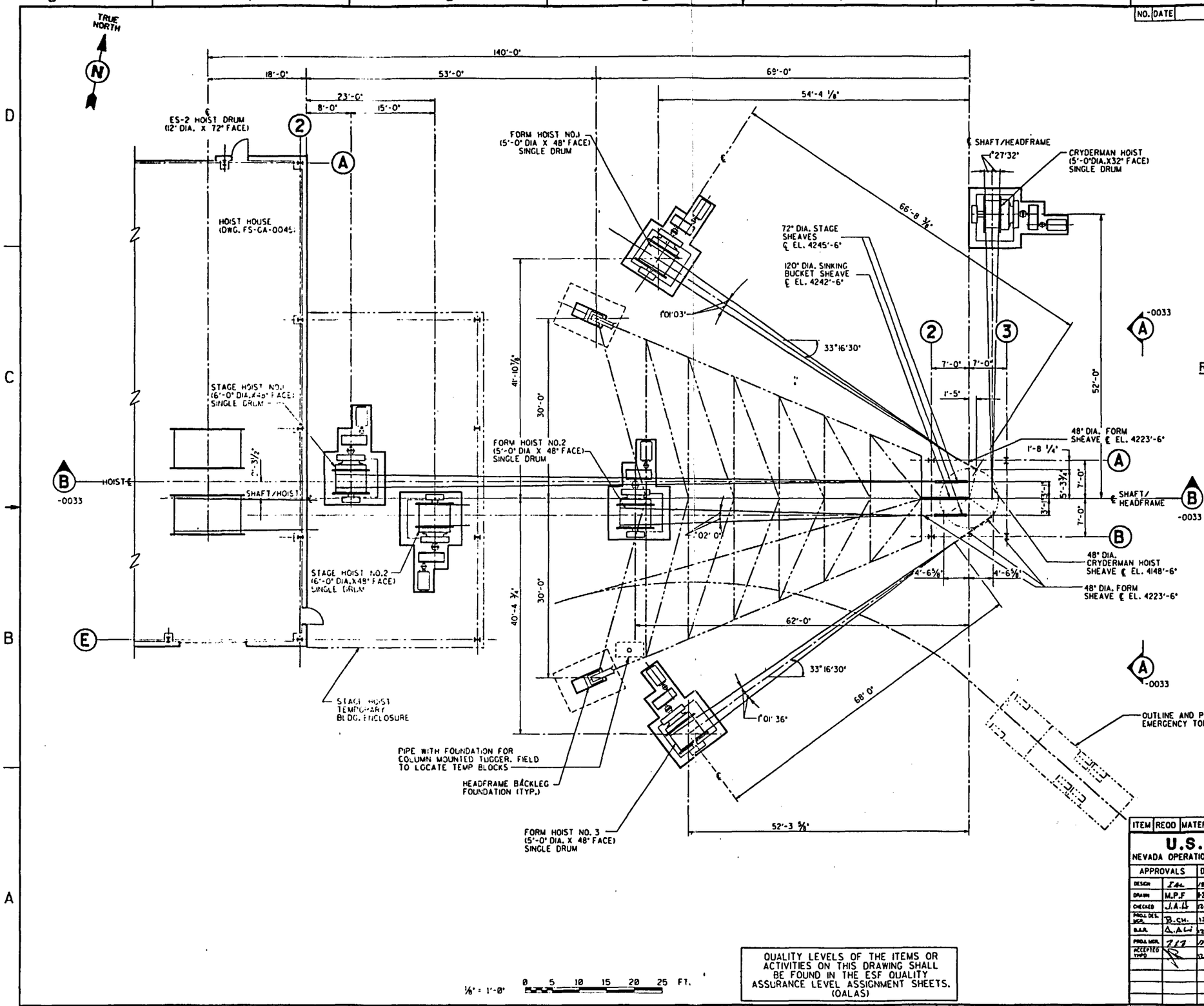


## REFERENCE DRAWINGS

| | |
|---|---|
| FS-GA-0032 | ES-2 SURFACE, HEADFRAME - SINKING SECTIONS |
| FS-GA-0033 | ES-2 SURFACE, HEADFRAME - SINKING ELEVATION & SECTIONS |
| FS-GA-0042 | ES-2 SURFACE, SHAFT COLLAR - SINKING PLANS |
| FS-GA-0043 | ES-2 SURFACE, SHAFT COLLAR - SINKING SECTIONS |

SI APERTURE CARD

Also Available On Aperture Card

8901040172-32

QUALITY LEVELS OF THE ITEMS OR ACTIVITIES ON THIS DRAWING SHALL BE FOUND IN THE ESF QUALITY ASSURANCE LEVEL ASSIGNMENT SHEETS. (QALAS)

| NO. | DATE | REVISION | DES. | DRN. | CHK. | P.D.M. | Q.A.R. | P.M. | YMPO |
|---|---|---|---|---|---|---|---|---|---|

| ITEM | REQD | MATERIAL | DESCRIPTION | DWG. NO. |
|---|---|---|---|---|

**U.S. DEPARTMENT OF ENERGY**
NEVADA OPERATIONS OFFICE — LAS VEGAS, NEVADA

| APPROVALS | | DATE |
|---|---|---|
| DESIGN | [illegible] | 12-7-88 |
| DRAWN | M.P.F | 12-8-88 |
| CHECKED | J.A.L | 12-8-88 |
| PROJ. DES. MGR. | B.CH. | 12-8-88 |
| Q.A.R. | A.A.L | 12-8-88 |
| PROJ. MGR. | [illegible] | 12-8-88 |
| ACCEPTED YMPO | [illegible] | 12-8-88 |

**FENIX & SCISSON, INC.**
LAS VEGAS, NEVADA

YUCCA MOUNTAIN PROJECT
EXPLORATORY SHAFT FACILITY
ES-2 SURFACE, SINKING HOIST LOCATION
**PLAN**

| W.B.S. NO. | DRAWING NO. | REV. |
|---|---|---|
| 1.2.6.5.2 | FS-GA-0034 | C |
| SCALE 1/8"=1'-0" | DATE | SHEET 1 OF 1 |

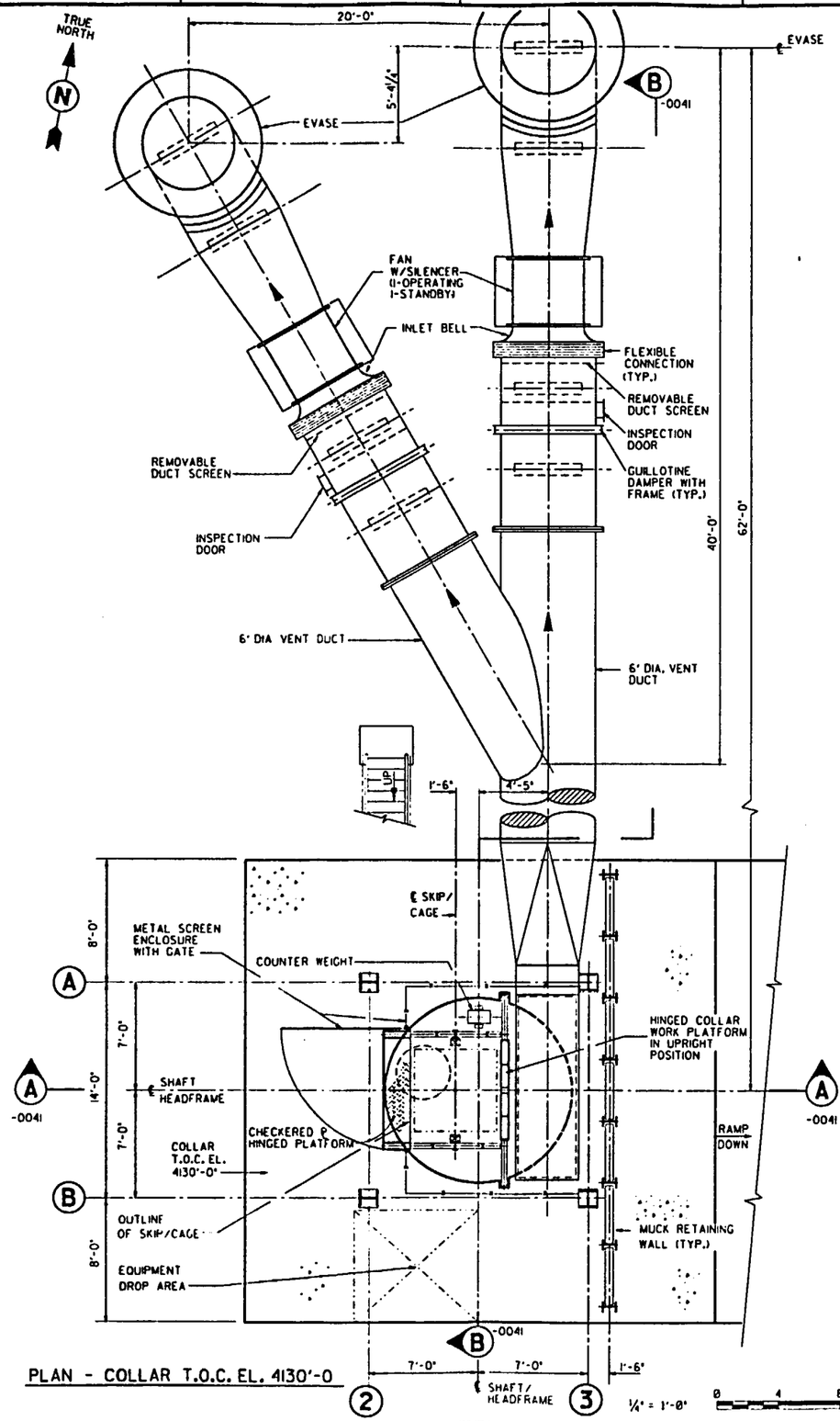


PLAN - COLLAR T.O.C. EL. 4130'-0

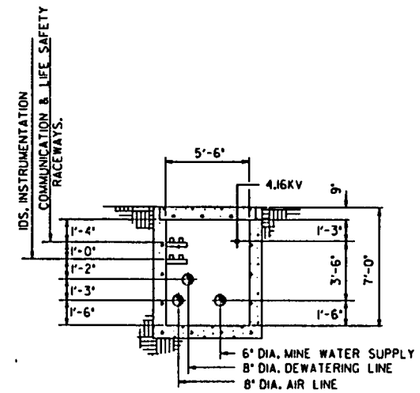


SECTION C-C

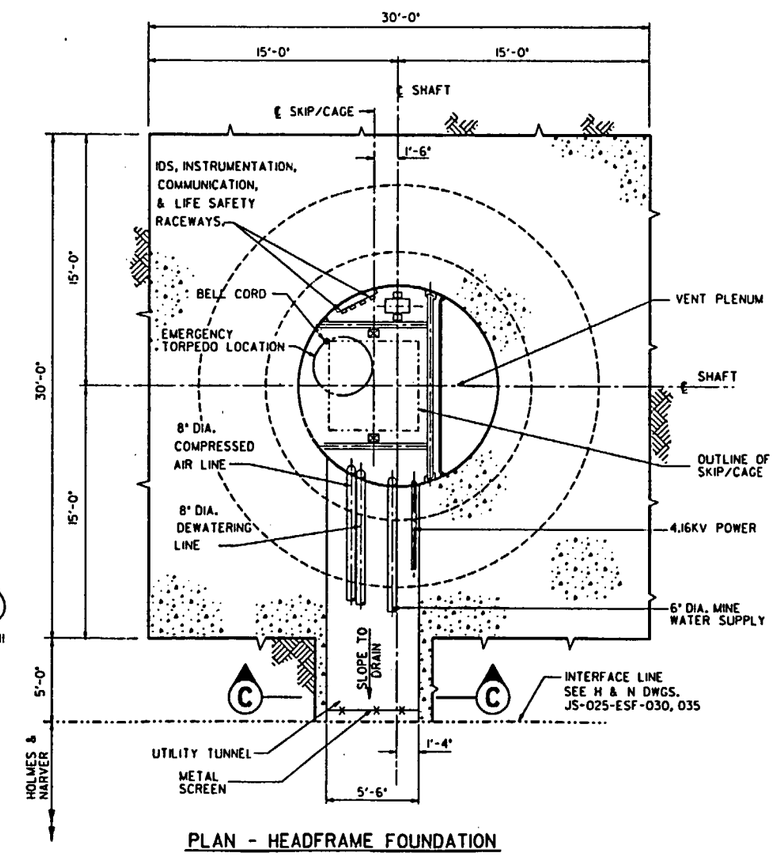


PLAN - HEADFRAME FOUNDATION

QUALITY LEVELS OF THE ITEMS OR ACTIVITIES ON THIS DRAWING SHALL BE FOUND IN THE ESF QUALITY ASSURANCE LEVEL ASSIGNMENT SHEETS. (QALAS)

| NO. | DATE | REVISION | DES. | DRN. | CHK. | P.D.M. | Q.A.R. | P.M. | YMPO |
|---|---|---|---|---|---|---|---|---|---|

## REFERENCE DRAWINGS

| | |
|---|---|
| FS-GA-0030 | ES-2 SURFACE, HEADFRAME - OPERATION SECTIONS |
| FS-GA-0031 | ES-2 SURFACE, HEADFRAME - OPERATION PLAN, ELEVATION & SECTION |
| FS-GA-0041 | ES-2 SURFACE, SHAFT COLLAR - OPERATION SECTIONS |

SI APERTURE CARD

Also Available On Aperture Card

8901040172-33

| ITEM | REQD | MATERIAL | DESCRIPTION | DWG. NO. |
|---|---|---|---|---|

**U.S. DEPARTMENT OF ENERGY**
NEVADA OPERATIONS OFFICE — LAS VEGAS, NEVADA

| APPROVALS | | DATE |
|---|---|---|
| DESIGN | JAL | 12-7-88 |
| DRAWN | H.D.G | 12-8-88 |
| CHECKED | J.A.H | 12-8-88 |
| PROJ. DES. MGR. | B.CH. | 12-8-88 |
| Q.A.R. | A.AL | 12-8-88 |
| PROJ. MGR. | 717 | 12-8-88 |
| ACCEPTED YMPO | | 12-8-88 |

**FENIX & SCISSON, INC.**
LAS VEGAS, NEVADA

YUCCA MOUNTAIN PROJECT
EXPLORATORY SHAFT FACILITY
ES-2 SURFACE, SHAFT COLLAR - OPERATION
**PLANS & SECTION**

| W.B.S. NO. | DRAWING NO. | REV. |
|---|---|---|
| 1.2.6.5.1 | FS-GA-0040 | C |
| SCALE 1/4"=1'-0" | DATE | SHEET 1 OF 1 |

| NO. | DATE | REVISION | DES. | DRN. | CHK. | P.D.M. | O.A.R. | P.M. | YMPO |
|---|---|---|---|---|---|---|---|---|---|

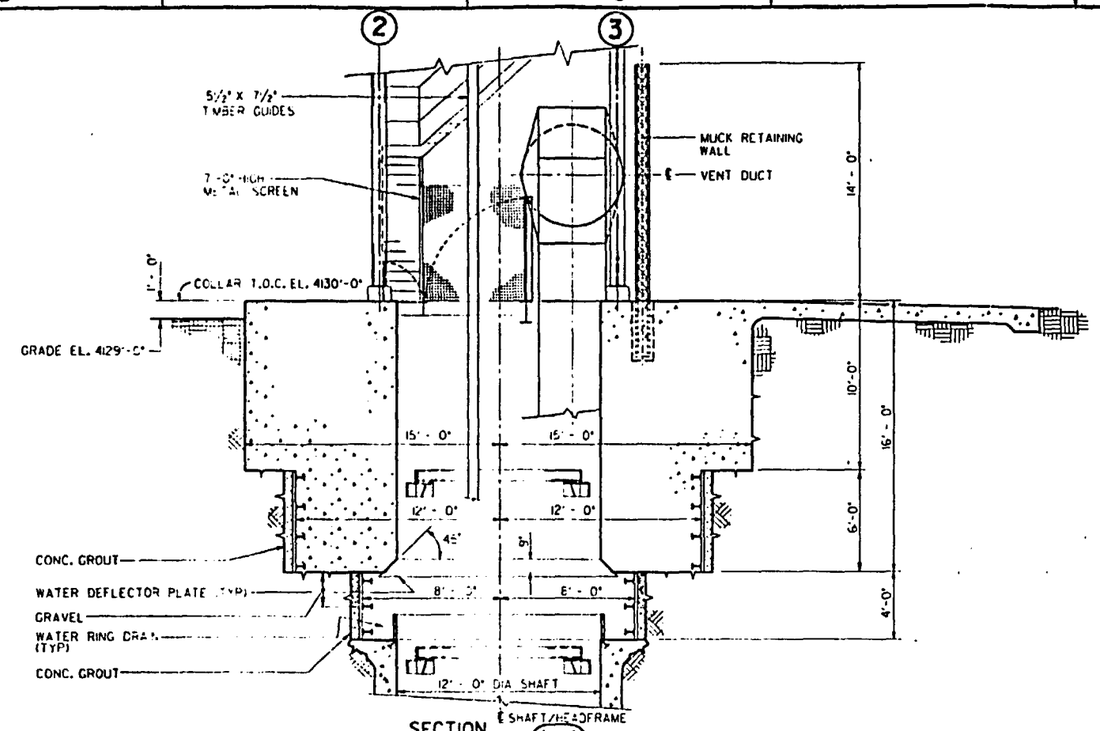


SECTION (A-A) -0040

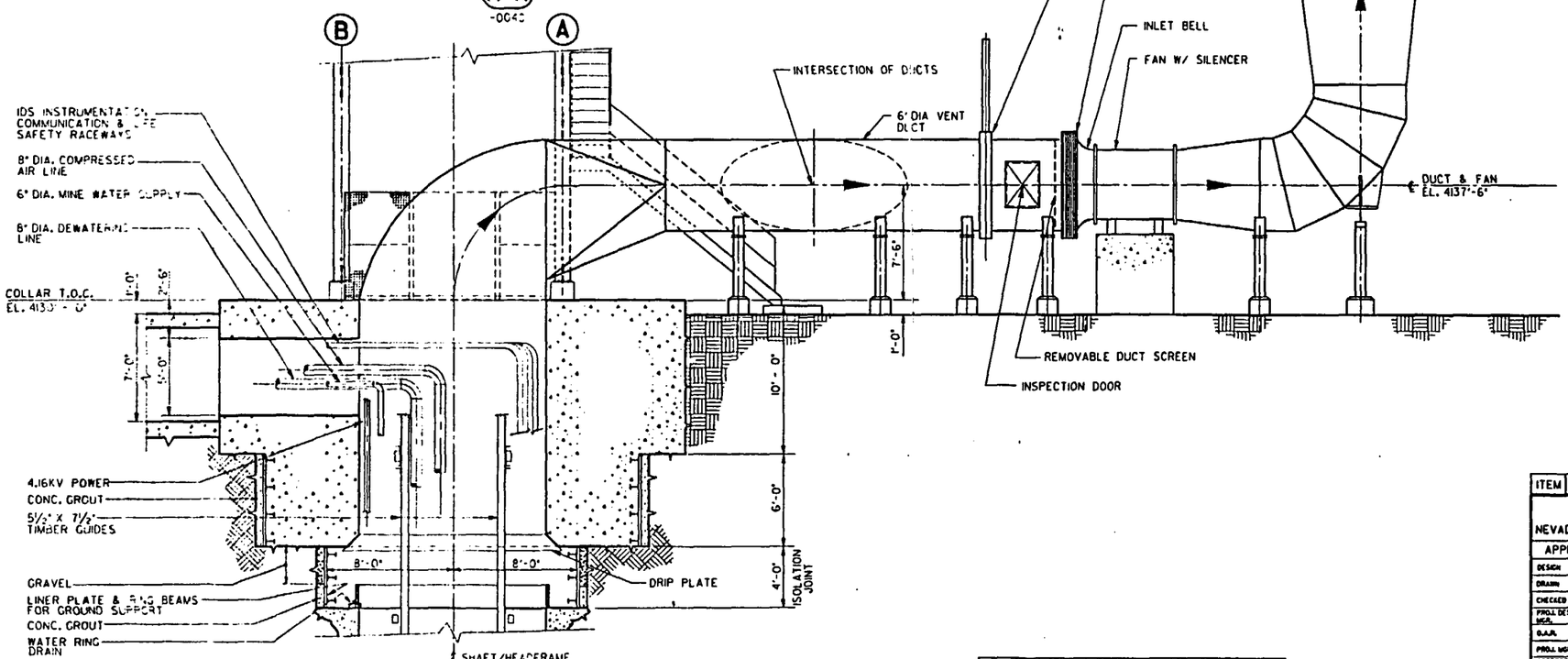


SECTION (B-B) -0040

¼" = 1'-0" 0 4 8 12 FT.

QUALITY LEVELS OF THE ITEMS OR ACTIVITIES ON THIS DRAWING SHALL BE FOUND IN THE ESF QUALITY ASSURANCE LEVEL ASSIGNMENT SHEETS. (QALAS)

## REFERENCE DRAWINGS

| | |
|---|---|
| FS-GA-0031 | ES-2 SURFACE, HEADFRAME - OPERATION PLAN, ELEVATION & SECTION |
| FS-GA-0040 | ES-2 SURFACE, SHAFT COLLAR - OPERATION PLANS & SECTION |

SI APERTURE CARD

Also Available On Aperture Card

8901040172-34

| ITEM | REQD | MATERIAL | DESCRIPTION | DWG. NO. |
|---|---|---|---|---|

**U.S. DEPARTMENT OF ENERGY**
NEVADA OPERATIONS OFFICE — LAS VEGAS, NEVADA

| APPROVALS | | DATE |
|---|---|---|
| DESIGN | [illegible] | 12-7-88 |
| DRAWN | D.B. | 9-2-88 |
| CHECKED | J.A.H. | 11-8-88 |
| PROJ. DES. MGR. | B.CH. | 12-8-88 |
| O.A.R. | A.A.L. | 12-8-88 |
| PROJ. MGR. | [illegible] | 12-1-88 |
| ACCEPTED YMPO | [illegible] | 12-13-88 |

**FENIX & SCISSON, INC.**
LAS VEGAS, NEVADA

YUCCA MOUNTAIN PROJECT
EXPLORATORY SHAFT FACILITY
ES-2 SURFACE, SHAFT COLLAR - OPERATION
**SECTIONS**

| W.B.S. NO. | DRAWING NO. | REV. |
|---|---|---|
| 1.2.6.5.1 | FS-GA-0041 | C |
| SCALE 1/4"=1'-0" | DATE | SHEET 1 OF 1 |

| NO. | DATE | REVISION | DES. | DRN. | CHK. | P.D.M. | O.A.R. | P.M. | YMPO |
|---|---|---|---|---|---|---|---|---|---|

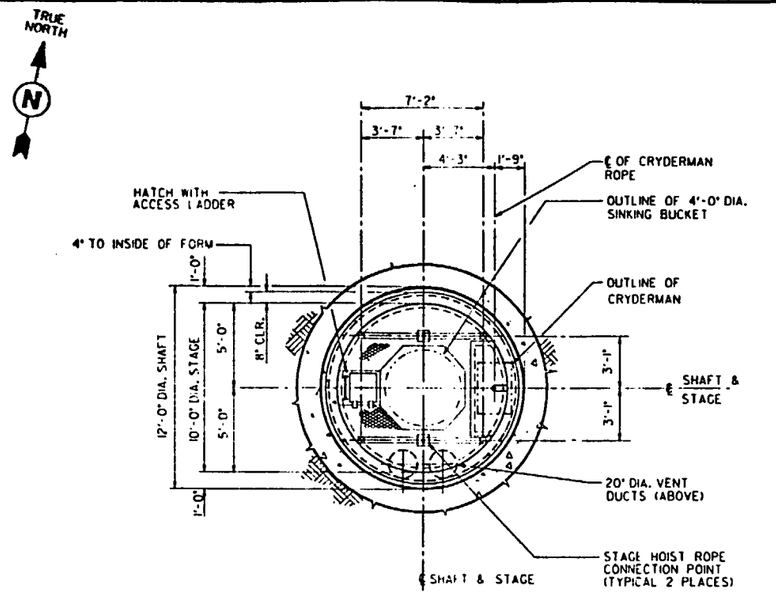


PLAN - TOP OF STAGE

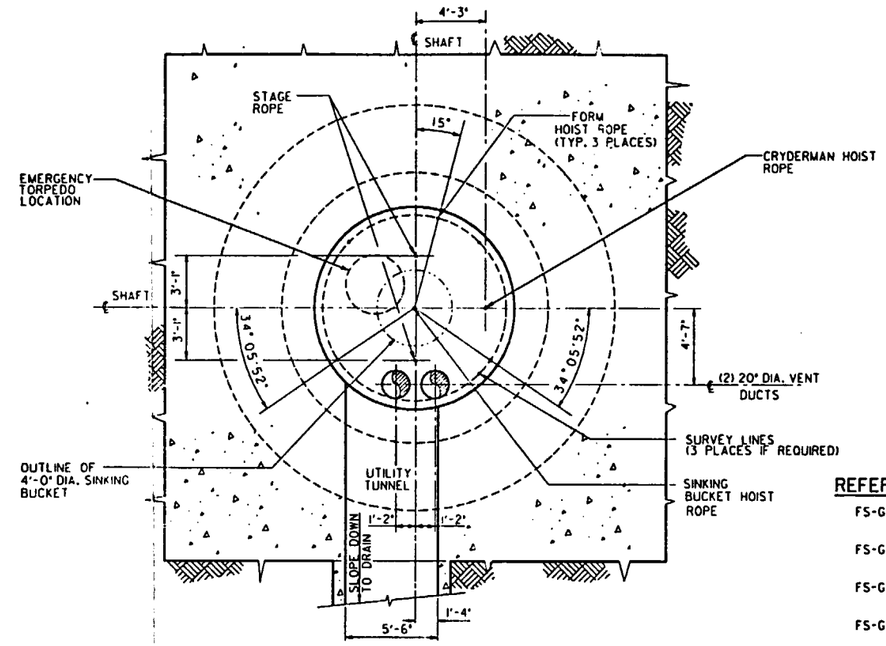


PLAN - HEADFRAME FOUNDATION

## REFERENCE DRAWINGS

| | |
|---|---|
| FS-GA-0032 | ES-2 SURFACE, HEADFRAME - SINKING SECTIONS |
| FS-GA-0033 | ES-2 SURFACE, HEADFRAME - SINKING ELEVATION & SECTION |
| FS-GA-0043 | ES-2 SURFACE, SHAFT COLLAR - SINKING SECTIONS |
| FS-GA-0063 | ES-1 SHAFT - CONCRETE FORM SECTION, PLANS & DETAIL |
| FS-GA-0072 | ES-1 SHAFT SINKING STAGE ELEVATIONS & SECTIONS |

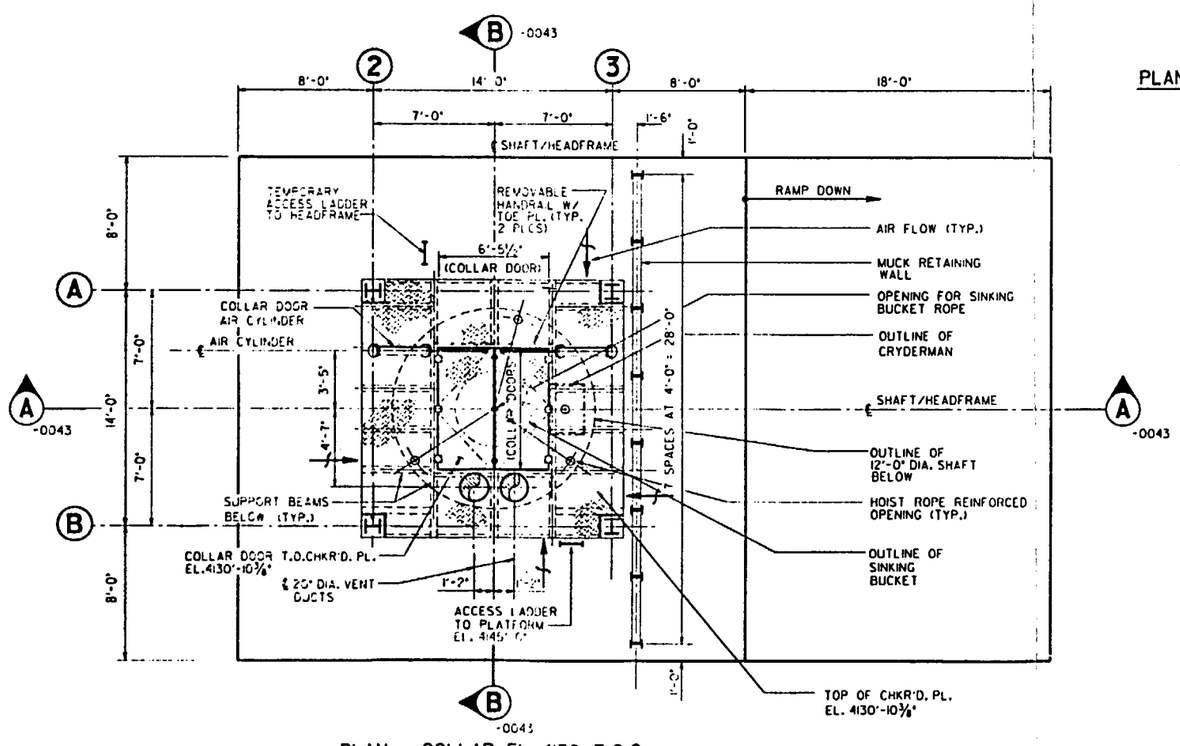


PLAN - COLLAR EL. 4130 T.O.C.

¼" = 1'-0" 0 4 8 12 FT.

QUALITY LEVELS OF THE ITEMS OR ACTIVITIES ON THIS DRAWING SHALL BE FOUND IN THE ESF QUALITY ASSURANCE LEVEL ASSIGNMENT SHEETS. (QALAS)

SI APERTURE CARD

Also Available On Aperture Card

8901040172-35

| ITEM | REQD | MATERIAL | DESCRIPTION | DWG. NO. |
|---|---|---|---|---|

**U.S. DEPARTMENT OF ENERGY**
NEVADA OPERATIONS OFFICE — LAS VEGAS, NEVADA

| APPROVALS | | DATE |
|---|---|---|
| DESIGN | JAL | 12-7-88 |
| DRAWN | H.D.G | 12-8-88 |
| CHECKED | J.A.L | 12-8-88 |
| PROJ. DES. MGR. | B.CH. | 12-8-88 |
| Q.A.R. | AAU | 12-8-88 |
| PROJ. MGR. | 217 | 12-9-88 |
| ACCEPTED TMPO | | 12-10-88 |

**FENIX & SCISSON, INC.**
LAS VEGAS, NEVADA

YUCCA MOUNTAIN PROJECT
EXPLORATORY SHAFT FACILITY
ES-2 SURFACE, SHAFT COLLAR - SINKING
**PLANS**

| W.B.S. NO. | DRAWING NO. | REV. |
|---|---|---|
| 1.2.6.5.1 | FS-GA-0042 | C |
| SCALE 1/4"=1'-0" | DATE | SHEET 1 OF 1 |

| NO. | DATE | REVISION | DES. | DRN. | CHK. | P.D.M. | O.A.R. | P.M. | YMPO |
|---|---|---|---|---|---|---|---|---|---|

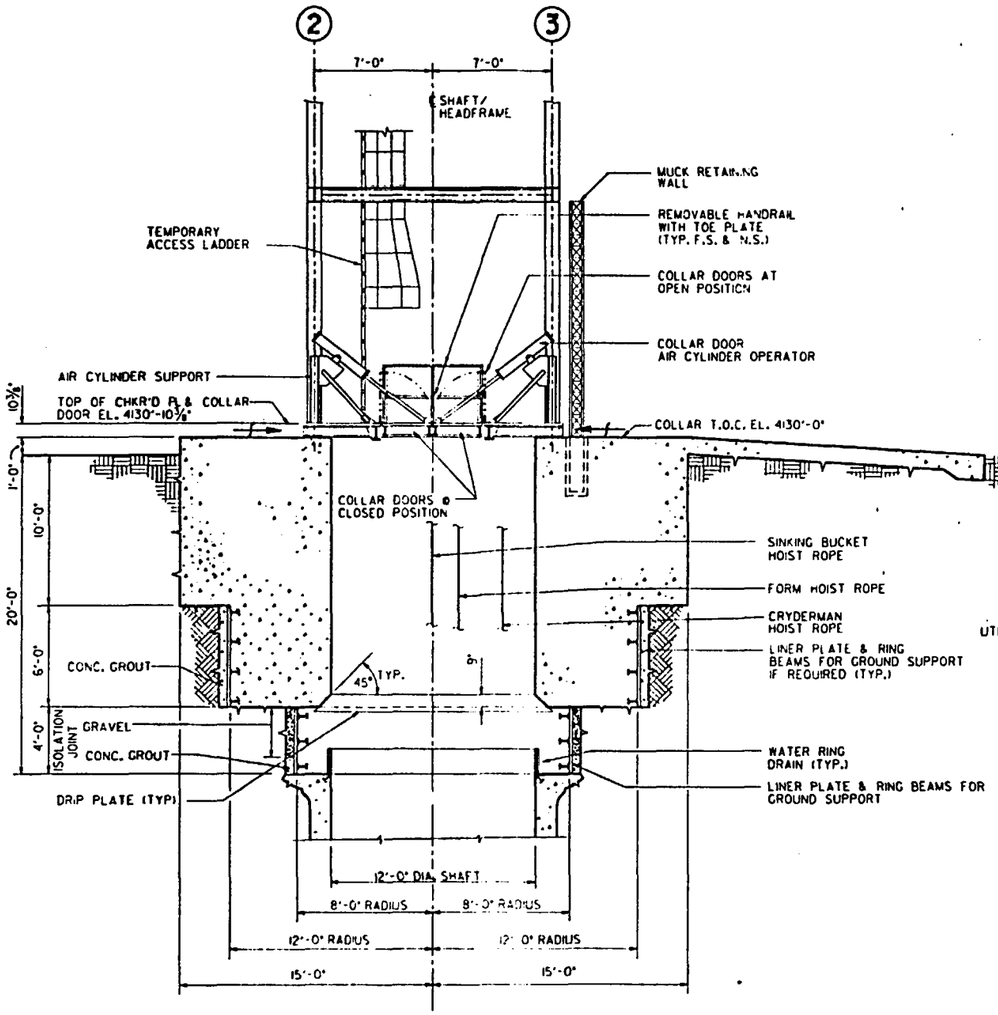


SECTION A-A
-0042

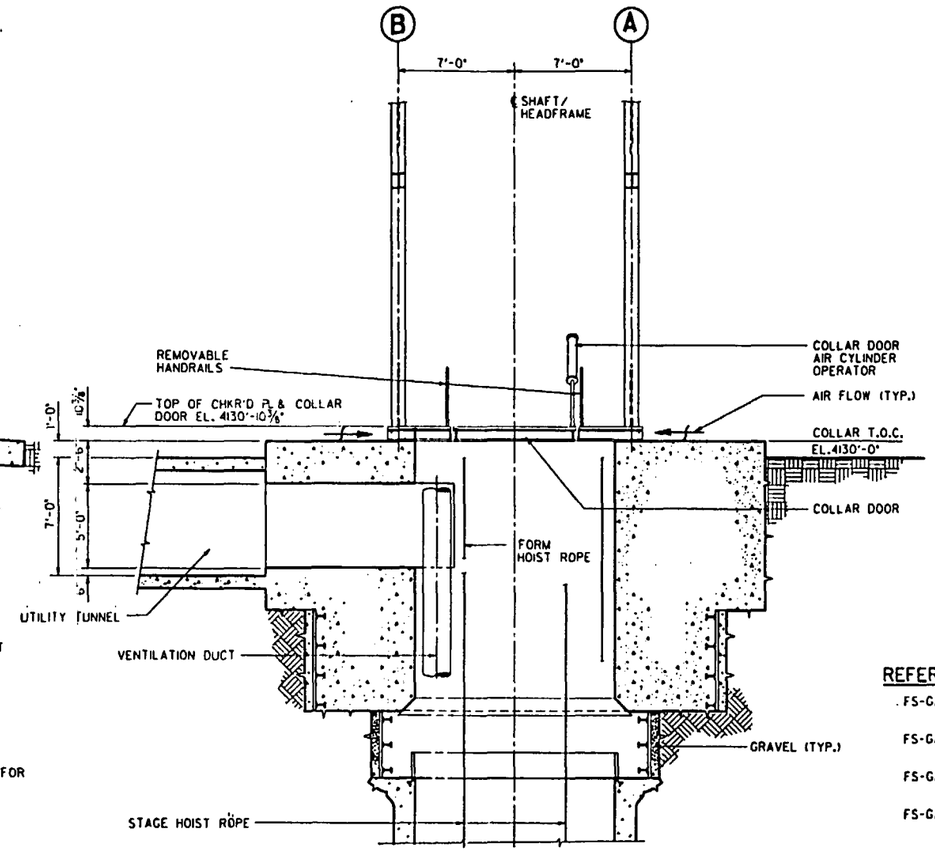


SECTION B-B
-0042

SI APERTURE CARD

Also Available On Aperture Card

## REFERENCE DRAWINGS

| | |
|---|---|
| FS-GA-0032 | ES-2 SURFACE, HEADFRAME - SINKING SECTIONS |
| FS-GA-0033 | ES-2 SURFACE, HEADFRAME - SINKING ELEVATION & SECTION |
| FS-GA-0034 | ES-2 SURFACE, SINKING HOIST LOCATION PLAN |
| FS-GA-0042 | ES-2 SURFACE, SHAFT COLLAR - SINKING PLANS |

8901040172-36

| ITEM | REQD | MATERIAL | DESCRIPTION | DWG. NO. |
|---|---|---|---|---|

**U.S. DEPARTMENT OF ENERGY**
NEVADA OPERATIONS OFFICE — LAS VEGAS, NEVADA

| APPROVALS | | DATE |
|---|---|---|
| DESIGN | [illegible] | 12-7-88 |
| DRAWN | M.P.F | 9-23-88 |
| CHECKED | J.A.H | 11-8-88 |
| PROJ. DES. MGR. | B.C.M. | 12-8-88 |
| O.A.R. | A.A.J. | 12-8-88 |
| PROJ. MGR. | [illegible] | 12-1-88 |
| ACCEPTED YMPO | [illegible] | 12-13-88 |

**FENIX & SCISSON, INC.**
LAS VEGAS, NEVADA

YUCCA MOUNTAIN PROJECT
EXPLORATORY SHAFT FACILITY
ES-2 SURFACE, SHAFT COLLAR - SINKING
**SECTIONS**

| W.B.S. NO. | DRAWING NO. | REV. |
|---|---|---|
| 1.2.6.5.1 | FS-GA-0043 | C |
| SCALE 1/4"=1'-0" | DATE | SHEET 1 OF 1 |

1/4" = 1'-0" 0 4 8 12 FT.

QUALITY LEVELS OF THE ITEMS OR ACTIVITIES ON THIS DRAWING SHALL BE FOUND IN THE ESF QUALITY ASSURANCE LEVEL ASSIGNMENT SHEETS. (QALAS)

| NO. | DATE | REVISION | DES. | DRN. | CHK. | P.D.M. | O.A.R. | P.M. | YMPO |
|---|---|---|---|---|---|---|---|---|---|

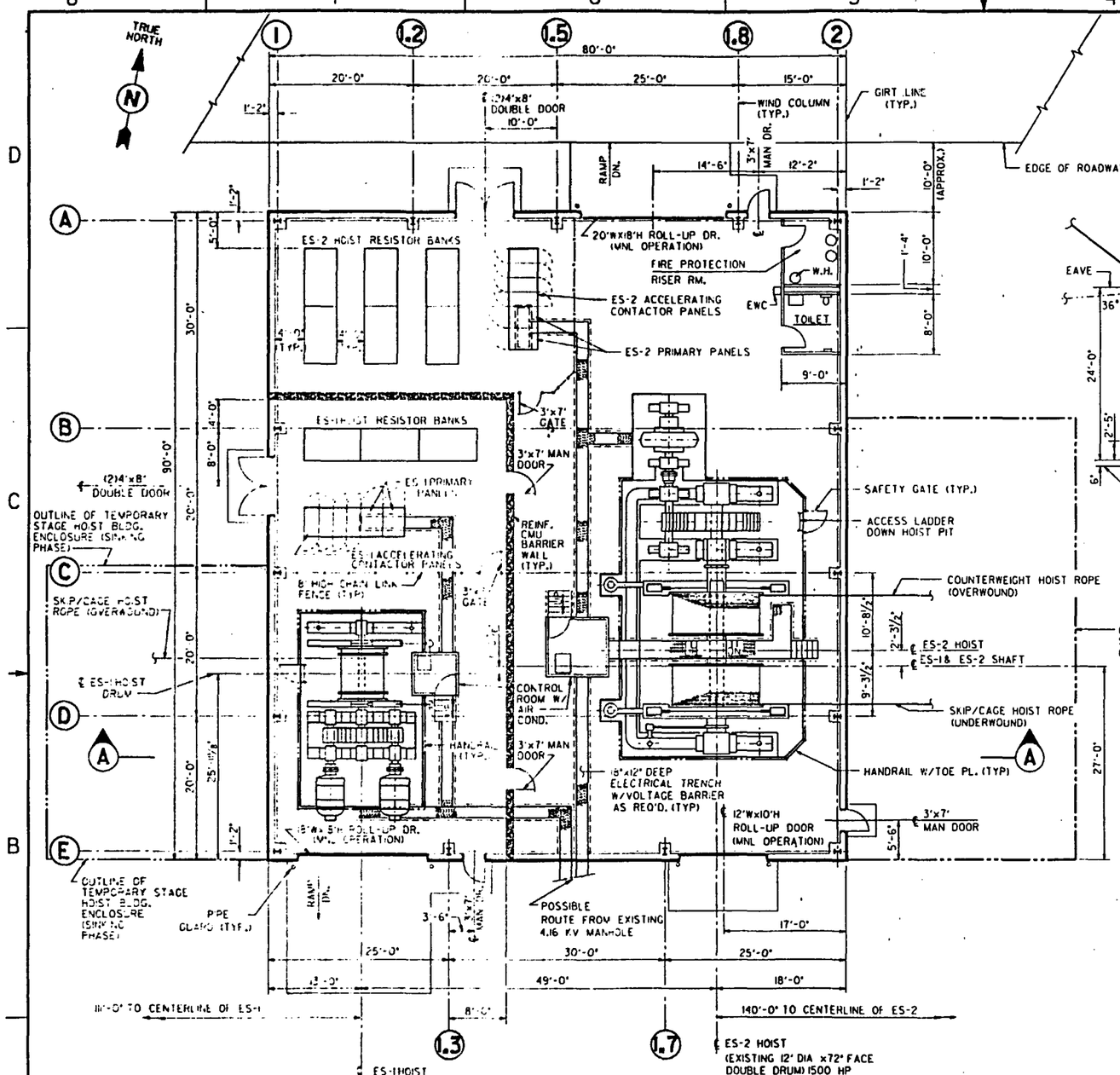


PLAN

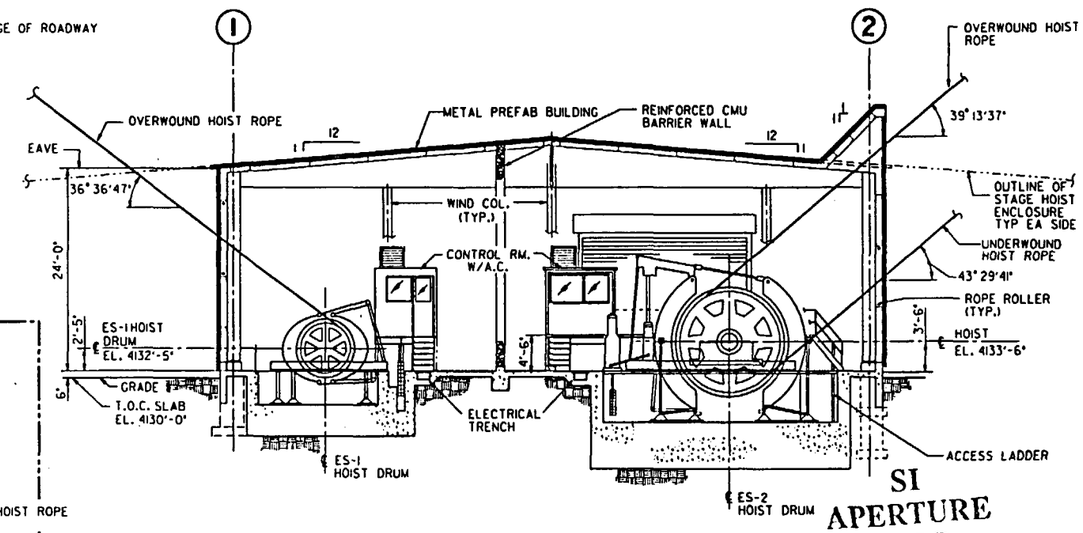


SECTION A-A

SI APERTURE CARD

Also Available On Aperture Card

## REFERENCE DRAWINGS

| | |
|---|---|
| FS-GA-0011 | SURFACE PLOT PLAN |
| FS-GA-0013 | ES-1 SURFACE, HEADFRAME - OPERATION PLAN, ELEVATION & SECTION |
| FS-GA-0016 | ES-1 SURFACE, SINKING HOIST LOCATION PLAN |
| FS-GA-0031 | ES-2 SURFACE, HEADFRAME - OPERATION PLAN, ELEVATION & SECTION |
| FS-GA-0034 | ES-2 SURFACE, SINKING HOIST LOCATION PLAN |

89010401 72-37

## INTERFACE NOTE

THE GENERAL ARRANGEMENT OF HOIST HOUSE, HOISTS LOCATION, CONTROL ROOMS, HOIST ELECTRICAL EQUIPMENT AND CONTROLS AND HOIST FOUNDATIONS IS BY FENIX & SCISSON. ALL REMAINING PARTS OF DESIGN ARE BY HOLMES & NARVER.

QUALITY LEVELS OF THE ITEMS OR ACTIVITIES ON THIS DRAWING SHALL BE FOUND IN THE ESF QUALITY ASSURANCE LEVEL ASSIGNMENT SHEETS. (QALAS)

1/8" = 1'-0" 0 5 10 15 20 25 FT.

| ITEM | REQD | MATERIAL | DESCRIPTION | DWG. NO. |
|---|---|---|---|---|

**U.S. DEPARTMENT OF ENERGY**
NEVADA OPERATIONS OFFICE — LAS VEGAS, NEVADA

| APPROVALS | | DATE |
|---|---|---|
| DESIGN | [illegible] | 12-7-88 |
| DRAWN | D.L.C | [illegible] |
| CHECKED | J.A.H | 12-8-88 |
| PROJ. ENG. MGR. | B.C.M. | 12-8-88 |
| Q.A.R. | A.A.L. | 12-8-88 |
| PROJ. MGR. | [illegible] | 12-8-88 |
| ACCEPTED YMPO | [illegible] | 12-15-88 |

**FENIX & SCISSON, INC.**
LAS VEGAS, NEVADA

YUCCA MOUNTAIN PROJECT
EXPLORATORY SHAFT FACILITY
ES-1 & ES-2 SURFACE, HOIST HOUSE
**PLAN & SECTION**

| W.B.S. NO. | DRAWING NO. | REV. |
|---|---|---|
| 1.2.6.5.2 | FS-GA-0045 | C |

SCALE 1/8"=1'-0" — DATE — SHEET 1 OF 1

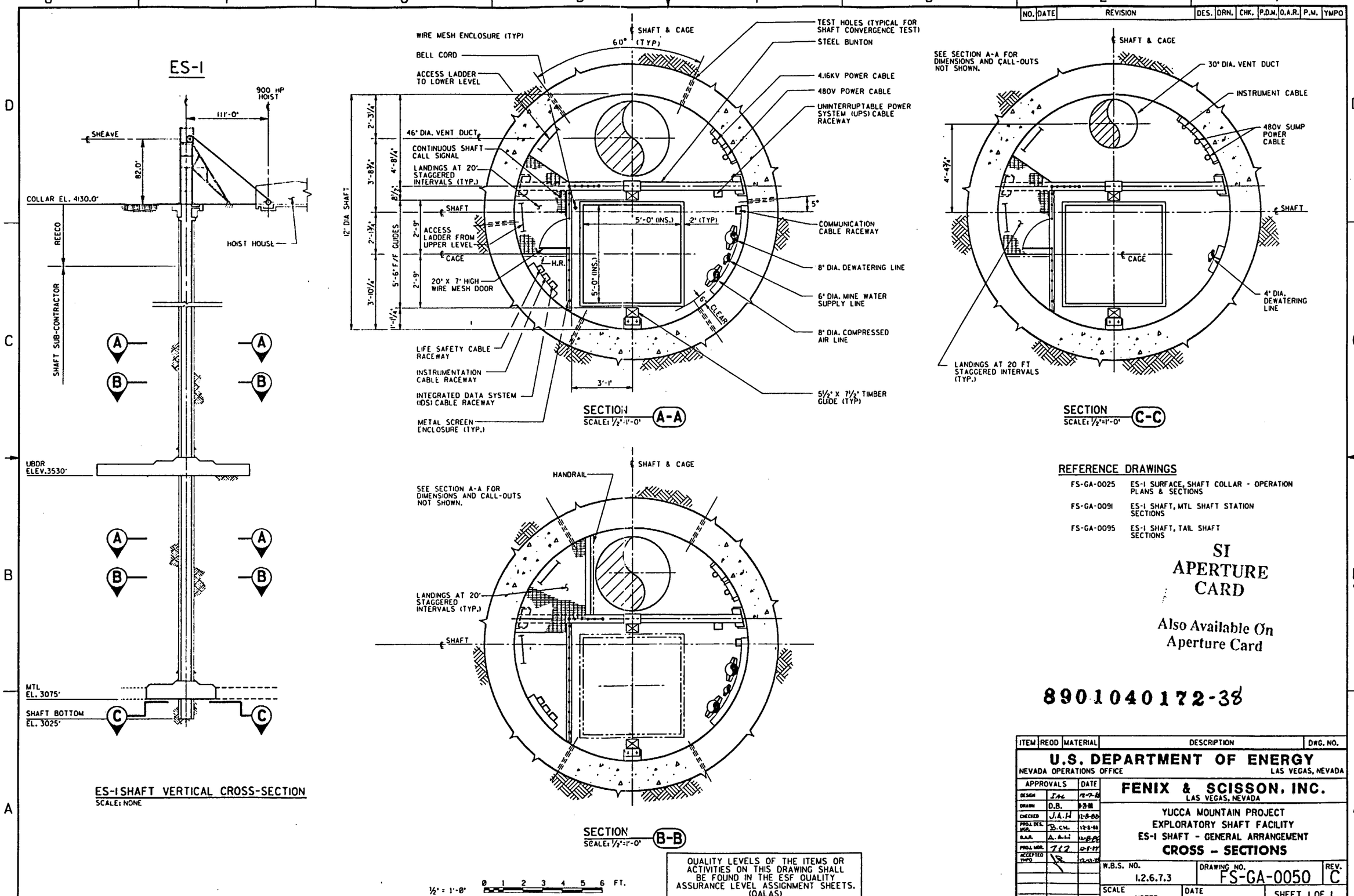


QUALITY LEVELS OF THE ITEMS OR ACTIVITIES ON THIS DRAWING SHALL BE FOUND IN THE ESF QUALITY ASSURANCE LEVEL ASSIGNMENT SHEETS. (QALAS)

| NO. | DATE | REVISION | DES. | DRN. | CHK. | P.D.M. | Q.A.R. | P.M. | YMPO |
|---|---|---|---|---|---|---|---|---|---|

## REFERENCE DRAWINGS

| | |
|---|---|
| FS-GA-0025 | ES-1 SURFACE, SHAFT COLLAR - OPERATION PLANS & SECTIONS |
| FS-GA-0091 | ES-1 SHAFT, MTL SHAFT STATION SECTIONS |
| FS-GA-0095 | ES-1 SHAFT, TAIL SHAFT SECTIONS |

SI APERTURE CARD

Also Available On Aperture Card

8901040172-38

| ITEM | REQD | MATERIAL | DESCRIPTION | DWG. NO. |
|---|---|---|---|---|

**U.S. DEPARTMENT OF ENERGY**
NEVADA OPERATIONS OFFICE — LAS VEGAS, NEVADA

| APPROVALS | | DATE |
|---|---|---|
| DESIGN | IAL | 12-7-88 |
| DRAWN | D.B. | 12-8-88 |
| CHECKED | J.A.H | 12-8-88 |
| PROJ. DES. MGR. | B.CH. | 12-8-88 |
| Q.A.R. | A.A.L. | 12-8-88 |
| PROJ. MGR. | TLT | 12-8-88 |
| ACCEPTED YMPO | | 12-13-88 |

**FENIX & SCISSON, INC.**
LAS VEGAS, NEVADA

YUCCA MOUNTAIN PROJECT
EXPLORATORY SHAFT FACILITY
ES-1 SHAFT - GENERAL ARRANGEMENT
**CROSS - SECTIONS**

| W.B.S. NO. | DRAWING NO. | REV. |
|---|---|---|
| 1.2.6.7.3 | FS-GA-0050 | C |
| SCALE NOTED | DATE | SHEET 1 OF 1 |

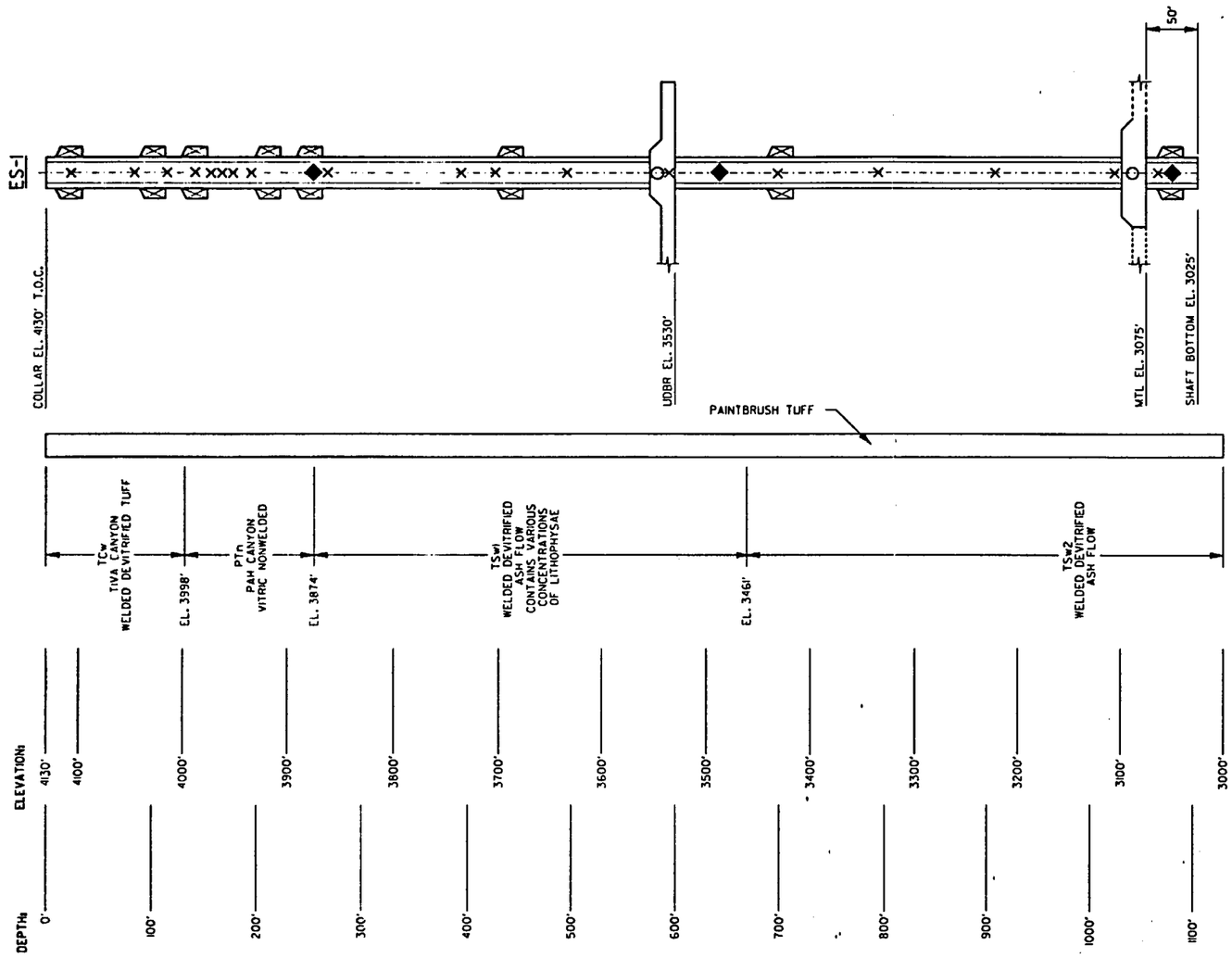


QUALITY LEVELS OF THE ITEMS OR ACTIVITIES ON THIS DRAWING SHALL BE FOUND IN THE ESF QUALITY ASSURANCE LEVEL ASSIGNMENT SHEETS. (QALAS)

| NO. | DATE | REVISION | DES. | DRN. | CHK. | P.D.M. | Q.A.R. | P.M. | YMPO |
|---|---|---|---|---|---|---|---|---|---|

## NOTES

1. ROCK MATRIX TEST - SAMPLES FROM EACH BLAST.
2. PERCHED WATER TEST - ANY LOCATION WHERE NATURAL WATER IS ENCOUNTERED.
3. SHAFT WALL MAPPING - CONTINUOUS.
4. REF. TO SDRD, NVO-309, REV. 1, APPENDIX B FOR TEST DETAILS.
5. EXACT LOCATIONS OF TESTS TO BE FIELD DETERMINED.
6. ROCK SAMPLES WILL BE TAKEN THROUGHOUT THE EXCAVATION.

## LEGEND

- APPROXIMATE LOCATION OF RADIAL BORE HOLE TEST.
- APPROXIMATE LOCATION OF HYDROCHEMISTRY & CHLORINE 36 SAMPLES.
- APPROXIMATE LOCATION OF SHAFT CONVERGENCE TEST.
- EXCAVATION EFFECTS TEST

NOTE: THE SYMBOLS SHOWN ABOVE ARE GENERIC IN NATURE AND ARE NOT IN SPECIFIC STANDARDS PUBLICATIONS. THESE SYMBOLS RELATE TO THIS DRAWING ONLY!

## REFERENCE DRAWING

FS-GA-0058 ES-1 SHAFT TEST ARRANGEMENTS - SHEET 1

SI APERTURE CARD

Also Available On Aperture Card

8901040172-39

| ITEM | REQD | MATERIAL | DESCRIPTION | DWG. NO. |
|---|---|---|---|---|

**U.S. DEPARTMENT OF ENERGY**
NEVADA OPERATIONS OFFICE — LAS VEGAS, NEVADA

| APPROVALS | | DATE |
|---|---|---|
| DESIGN | JM | 12-7-87 |
| DRAWN | J.B. | 12-8-88 |
| CHECKED | J.AH | 12-8-88 |
| PROJ. DES. MGR. | B.CH | 12-8-88 |
| Q.A.R. | A.ALI | 12-8-88 |
| PROJ. MGR. | ZIZ | 12-8-88 |
| ACCEPTED YMPO | [illegible] | 12-8-88 |

**FENIX & SCISSON, INC.**
LAS VEGAS, NEVADA

YUCCA MOUNTAIN PROJECT
EXPLORATORY SHAFT FACILITY
ES-1 SHAFT
**ELEVATION & TEST LOCATIONS**

| W.B.S. NO. | DRAWING NO. | REV. |
|---|---|---|
| 1.2.6.6.0 | FS-GA-0057 | C |
| SCALE 1"=60' | DATE | SHEET 1 OF 1 |

| NO. | DATE | REVISION | DES. | DRN. | CHK. | P.D.M. | O.A.R. | P.M. | YMPO |
|---|---|---|---|---|---|---|---|---|---|

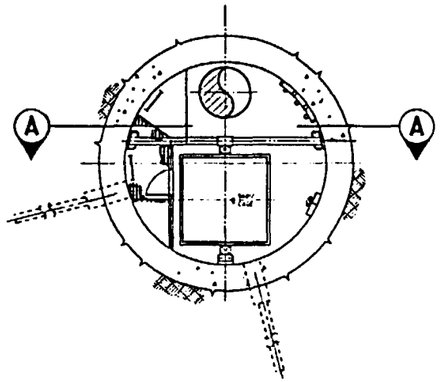


PROPOSED
ES-1 SHAFT
CROSS SECTION
SCALE: NONE

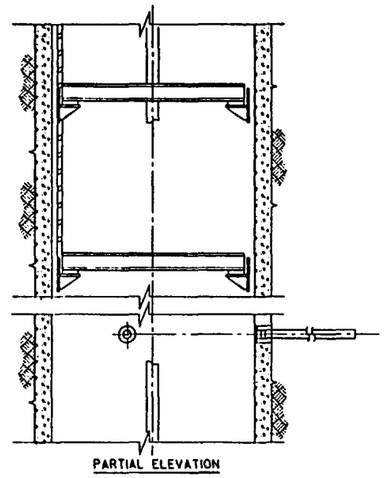

PARTIAL ELEVATION

SECTION A-A
SCALE: NONE

TEST LAYOUT AFTER SHAFT STEEL INSTALLATION

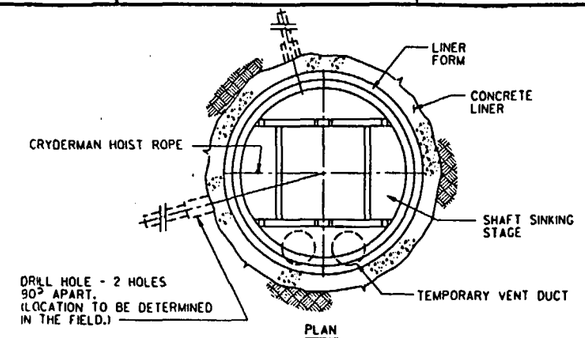


PLAN
SCALE: NONE

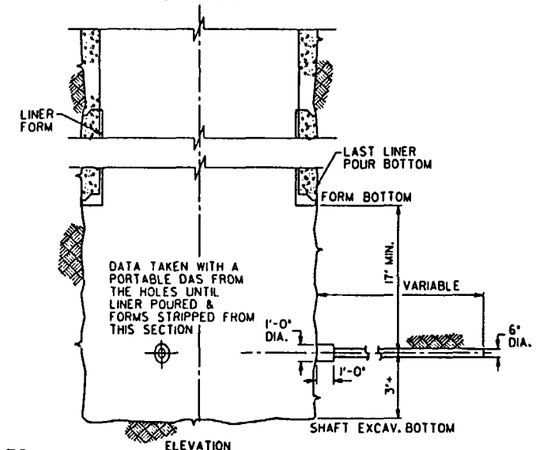


ELEVATION
SCALE: NONE

TEST LAYOUT BEFORE SHAFT STELL INSTALLATION

RADIAL BOREHOLES
TEST
REF.: SDRD, NVO-309, REV. I APP. B

## NOTES

1. FINAL VERTICAL LOCATION AND DRILL HOLE ORIENTATION OF THE TEST IS FIELD DETERMINED.
2. DIMENSIONS BASED ON SDRD, NVO-309, REV. I APPENDIX B
3. DAS LOCATIONS PROVIDED IN TITLE II

## REFERENCE DRAWINGS

FS-GA-0057 ES-I SHAFT ELEVATION & TEST LOCATIONS

FS-GA-0072 ES-I SHAFT SINKING STAGE ELEVATIONS & SECTIONS

SI APERTURE CARD

Also Available On Aperture Card

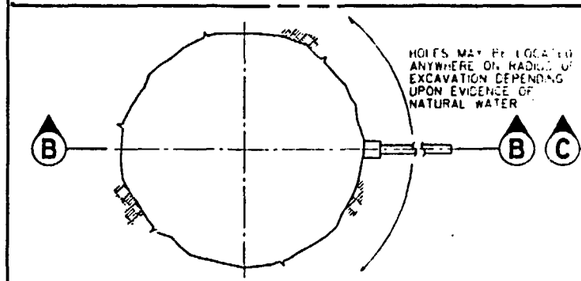


PLAN - UNLINED SECTION

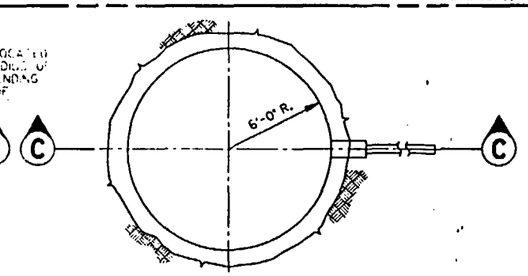


PLAN - LINED SECTION

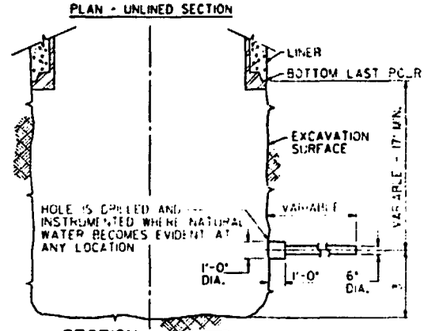


SECTION B-B
SCALE: NONE

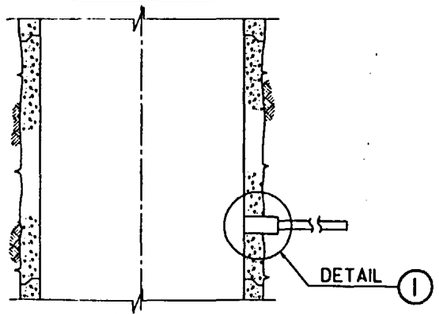


SECTION C-C
SCALE: NONE

1½" = 1'-0" 0 ½ 1 2 FT.

PERCHED WATER TEST
REF. SDRD, NVO-309, REV. I APP. B

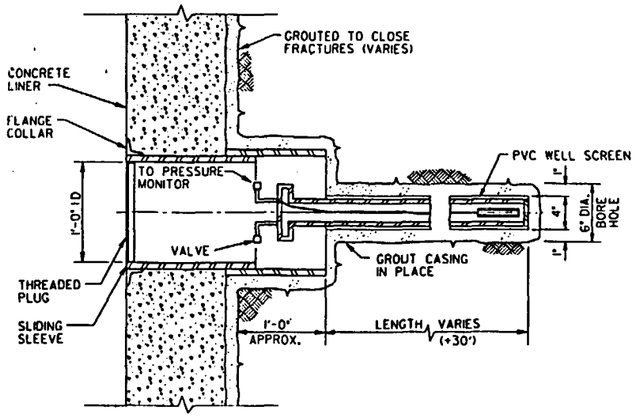


DETAIL 1
SCALE: 1½"=1'-0"

QUALITY LEVELS OF THE ITEMS OR ACTIVITIES ON THIS DRAWING SHALL BE FOUND IN THE ESF QUALITY ASSURANCE LEVEL ASSIGNMENT SHEETS. (QALAS)

## NOTES

1. WATER RING MAY BE NECESSARY TO COLLECT CONTINUOUS WATER FLOWS.

8901040172-40

| ITEM | REQD | MATERIAL | DESCRIPTION | DWG. NO. |
|---|---|---|---|---|

**U.S. DEPARTMENT OF ENERGY**
NEVADA OPERATIONS OFFICE — LAS VEGAS, NEVADA

| APPROVALS | | DATE |
|---|---|---|
| DESIGN | [illegible] | [illegible] |
| DRAWN | D.C. | [illegible] |
| CHECKED | J.A.L. | [illegible] |
| PROJ. DES. MGR. | D.C.H. | [illegible] |
| Q.A.R. | A.A.L. | [illegible] |
| PROJ. MGR. | [illegible] | [illegible] |
| ACCEPTED YMPO | [illegible] | [illegible] |

**FENIX & SCISSON, INC.**
LAS VEGAS, NEVADA

YUCCA MOUNTAIN PROJECT
EXPLORATORY SHAFT FACILITY
ES-I SHAFT

**TEST ARRANGEMENTS - SHEET 1**

| W.B.S. NO. | DRAWING NO. | REV. |
|---|---|---|
| 1.2.6.6.0 | FS-GA-0058 | C |
| SCALE: NOTED | DATE | SHEET 1 OF 1 |

| NO. | DATE | REVISION | DES. | DRN. | CHK. | P.D.M. | O.A.R. | P.M. | YMPO |
|---|---|---|---|---|---|---|---|---|---|

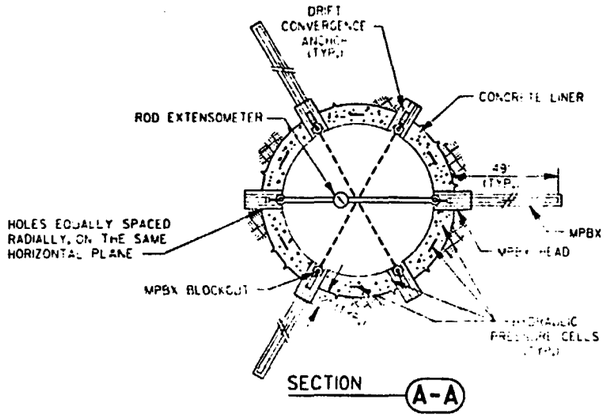


SECTION (A-A)

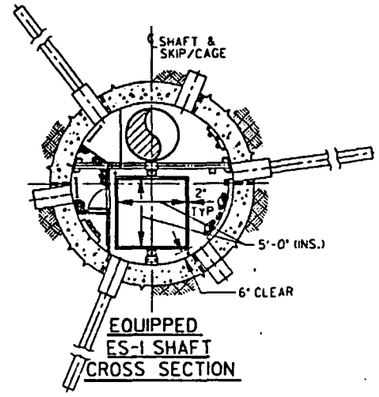


EQUIPPED ES-1 SHAFT CROSS SECTION

## NOTES

1. REFER TO SDRD, NVO-309, REV. 1 APP. B
2. DESCRIPTION OF MPBX, ANCHORS, ROD EXTENSOMETERS AND PRESSURE CELLS TBD.
3. HOLE LOCATIONS WILL BE COORDINATED WITH LOS ALAMOS TO TAKE INTO ACCOUNT SHAFT FURNISHINGS AND EASE OF MEASUREMENTS IN FULLY EQUIPPED SHAFT.

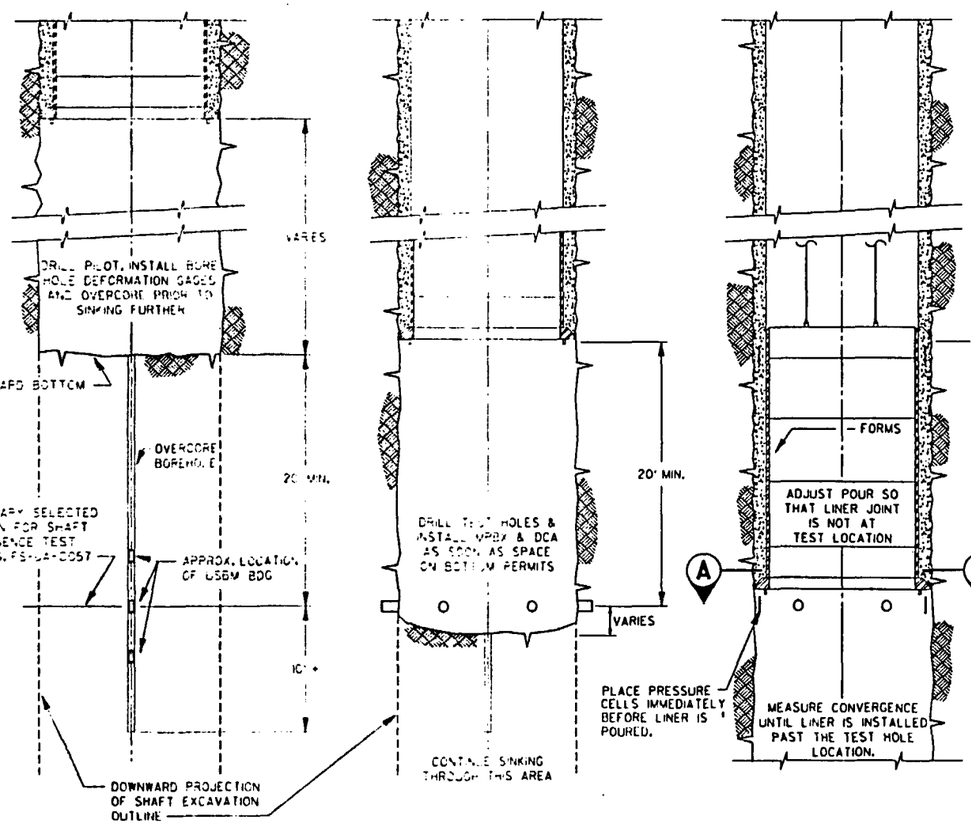


STEP 1 STEP 2 STEP 3

SHAFT CONVERGENCE TEST LAYOUT & SEQUENCE

REFERENCE: SDRD, NVO-309, REV. 1 APP. B

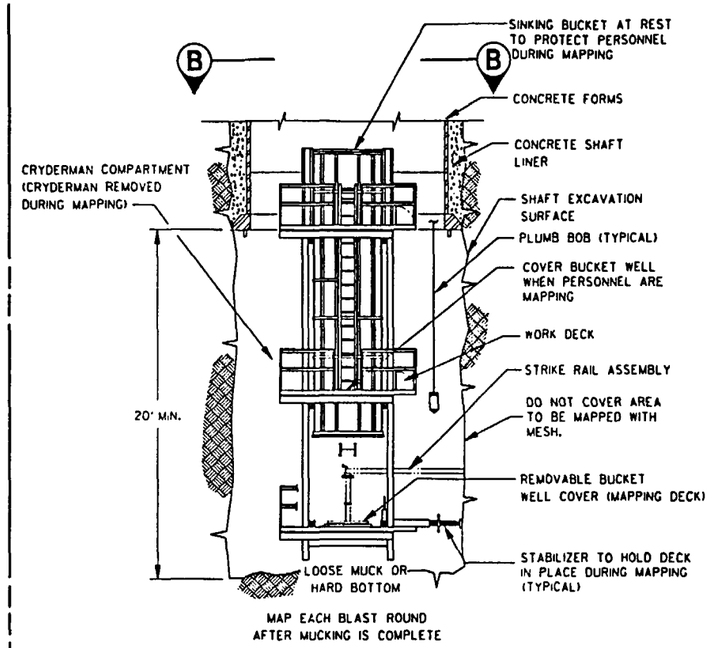


MAP EACH BLAST ROUND AFTER MUCKING IS COMPLETE

PARTIAL ELEVATION
SHAFT MAPPING & PHOTOGRAPHY TEST

REFERENCE: SDRD, NVO-309, REV. 1 APP. B

## REFERENCE DRAWINGS

| | |
|---|---|
| FS-GA-0057 | ES-1 SHAFT ELEVATION & TEST LOCATIONS |
| FS-GA-0063 | ES-1 SHAFT - CONCRETE FORM SECTION, PLANS & DETAIL |
| FS-GA-0072 | ES-1 SHAFT SINKING STAGE ELEVATIONS & SECTIONS |

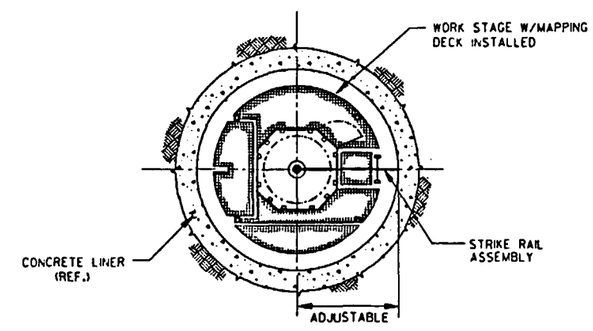


SECTION (B-B)

SI APERTURE CARD

Also Available On Aperture Card

8901040172-41

QUALITY LEVELS OF THE ITEMS OR ACTIVITIES ON THIS DRAWING SHALL BE FOUND IN THE ESF QUALITY ASSURANCE LEVEL ASSIGNMENT SHEETS. (OALAS)

| ITEM | REQD | MATERIAL | DESCRIPTION | DWG. NO. |
|---|---|---|---|---|

U.S. DEPARTMENT OF ENERGY
NEVADA OPERATIONS OFFICE — LAS VEGAS, NEVADA

| APPROVALS | | DATE |
|---|---|---|
| DESIGN | [illegible] | [illegible] |
| DRAWN | J.O.E | 8-27-88 |
| CHECKED | J.A.H | 12-8-88 |
| PROJ. DES. MGR. | B.CH. | 12-8-88 |
| Q.A.R. | A.ALI | 12-8-88 |
| PROJ. MGR. | [illegible] | 12-1-88 |
| ACCEPTED YMPO | [illegible] | 12-13-88 |

FENIX & SCISSON, INC.
LAS VEGAS, NEVADA

YUCCA MOUNTAIN PROJECT
EXPLORATORY SHAFT FACILITY
ES-1 SHAFT
TEST ARRANGEMENTS - SHEET 2

| W.B.S. NO. | DRAWING NO. | REV. |
|---|---|---|
| 1.2.6.6.0 | FS-GA-0059 | C |
| SCALE: NONE | DATE | SHEET 1 OF 1 |

| NO. | DATE | REVISION | DES. | DRN. | CHK. | P.D.M. | O.A.R. | P.M. | YMPO |
|---|---|---|---|---|---|---|---|---|---|

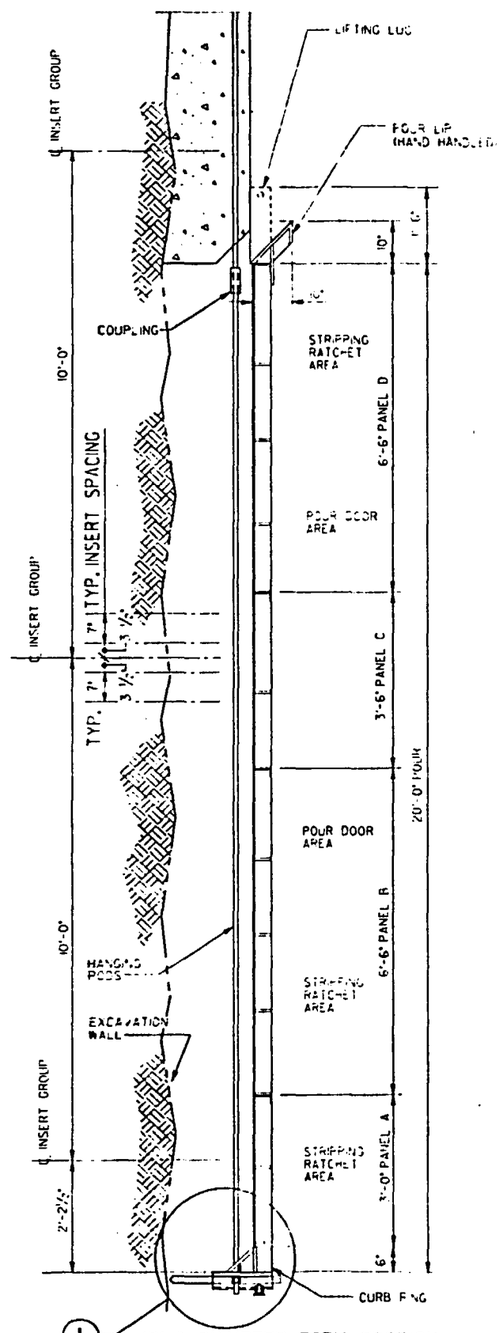


1 12'-1" DIAMETER FORM SECTION
SCALE: ¾"=1'-0"

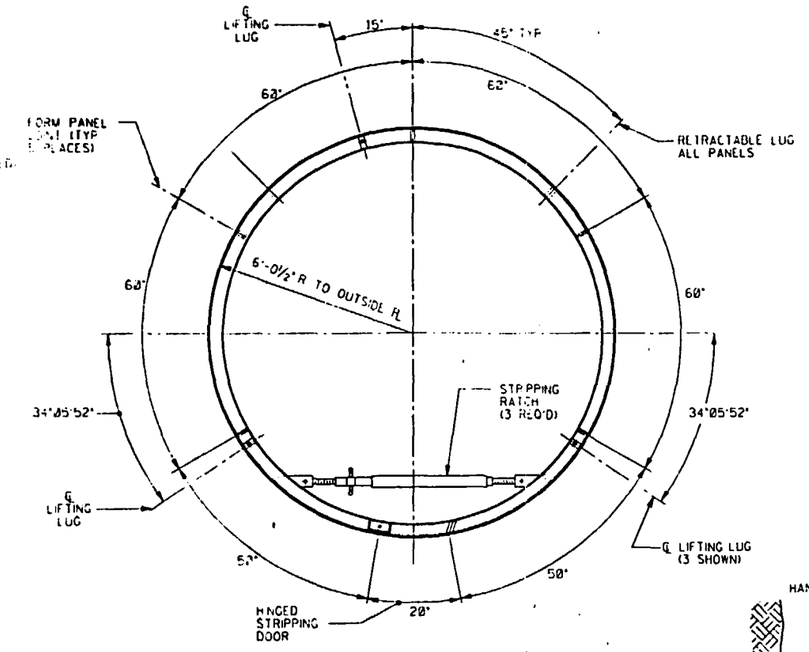


PLAN AT TOP OF FORM
SCALE: ½"=1'-0"

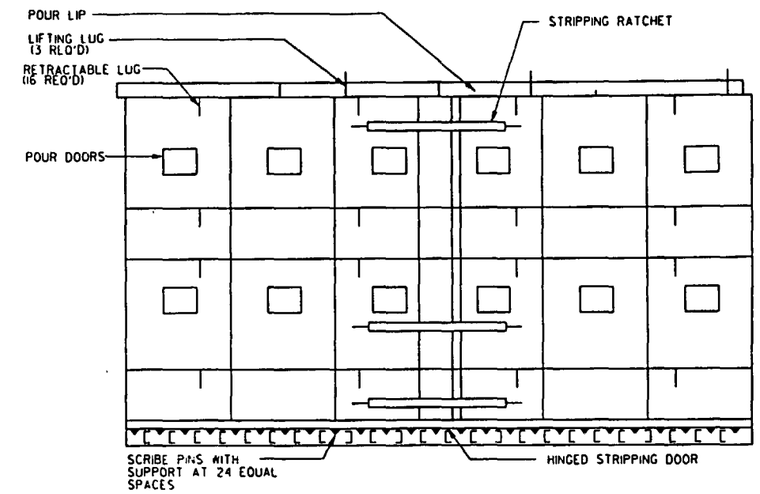


DEVELOPED SKIN PLATE
SCALE: ¼"=1'-0"

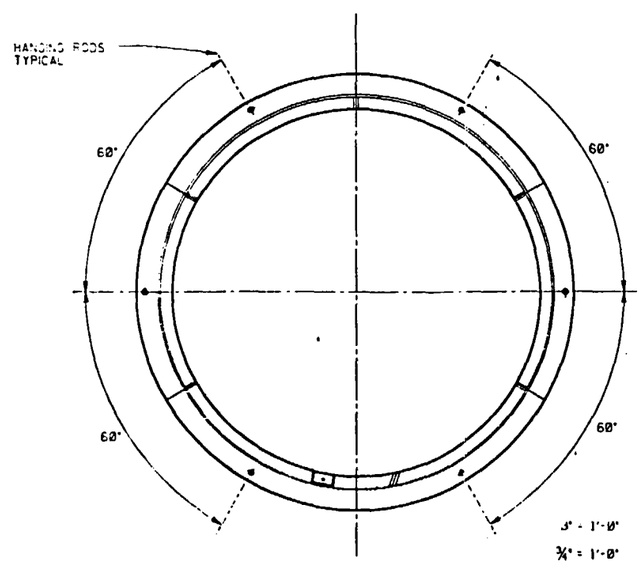


PLAN AT CURB RING
SCALE: ½"=1'-0"

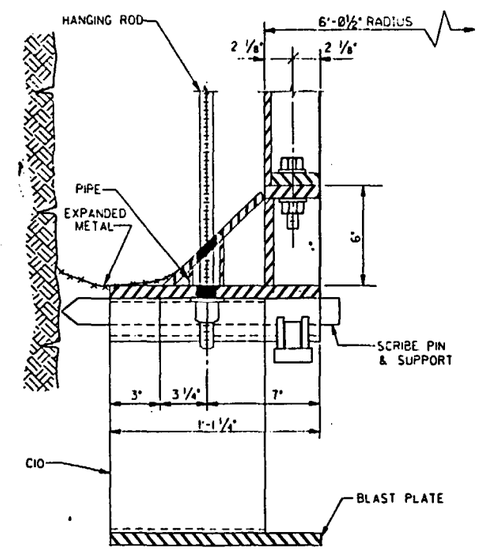


CURB RING DETAIL
DETAIL 1
SCALE: 3"=1'-0"

| | |
|---|---|
| 3" = 1'-0" | 0, ¼, ½, 1 FT. |
| ¾" = 1'-0" | 0, 1, 2, 3, 4 FT. |
| ½" = 1'-0" | 0, 1, 2, 3, 4, 5, 6 FT. |
| ¼" = 1'-0" | 0, 4, 8, 12 FT. |

QUALITY LEVELS OF THE ITEMS OR ACTIVITIES ON THIS DRAWING SHALL BE FOUND IN THE ESF QUALITY ASSURANCE LEVEL ASSIGNMENT SHEETS. (QALAS)

## REFERENCE DRAWINGS

| | |
|---|---|
| FS-GA-0054 | ES-I SHAFT SINKING SEQUENCE SHEET 1 |
| FS-GA-0058 | ES-I SHAFT TEST ARRANGEMENTS - SHEET 1 |
| FS-GA-0059 | ES-I SHAFT TEST ARRANGEMENTS - SHEET2 |
| FS-GA-0062 | ES-I SHAFT LINER SECTION & DETAILS |

SI APERTURE CARD

Also Available On Aperture Card

8901040172-42

| ITEM | REQD | MATERIAL | DESCRIPTION | DWG. NO. |
|---|---|---|---|---|

**U.S. DEPARTMENT OF ENERGY**
NEVADA OPERATIONS OFFICE — LAS VEGAS, NEVADA

| APPROVALS | | DATE |
|---|---|---|
| DESIGN | JAG | 12-7-88 |
| DRAWN | D.W.C | 12-2-88 |
| CHECKED | J.A.H | 12-8-88 |
| PROJ. DES. ENG. | B.CH. | 12-8-88 |
| Q.A.R. | A. Ali | 12-8-88 |
| PROJ. MGR. | [illegible] | 12-8-88 |
| ACCEPTED YMPO | [illegible] | 12-13-88 |

**FENIX & SCISSON, INC.**
LAS VEGAS, NEVADA

YUCCA MOUNTAIN PROJECT
EXPLORATORY SHAFT FACILITY
ES-I SHAFT - CONCRETE FORM
**SECTION, PLANS & DETAIL**

| W.B.S. NO. | DRAWING NO. | REV. |
|---|---|---|
| 1.2.6.4.1 | FS-GA-0063 | C |
| SCALE: NOTED | DATE | SHEET 1 OF 1 |

| NO. | DATE | REVISION | DES. | DRN. | CHK. | P.D.M. | Q.A.R. | P.M. | YMPO |
|---|---|---|---|---|---|---|---|---|---|

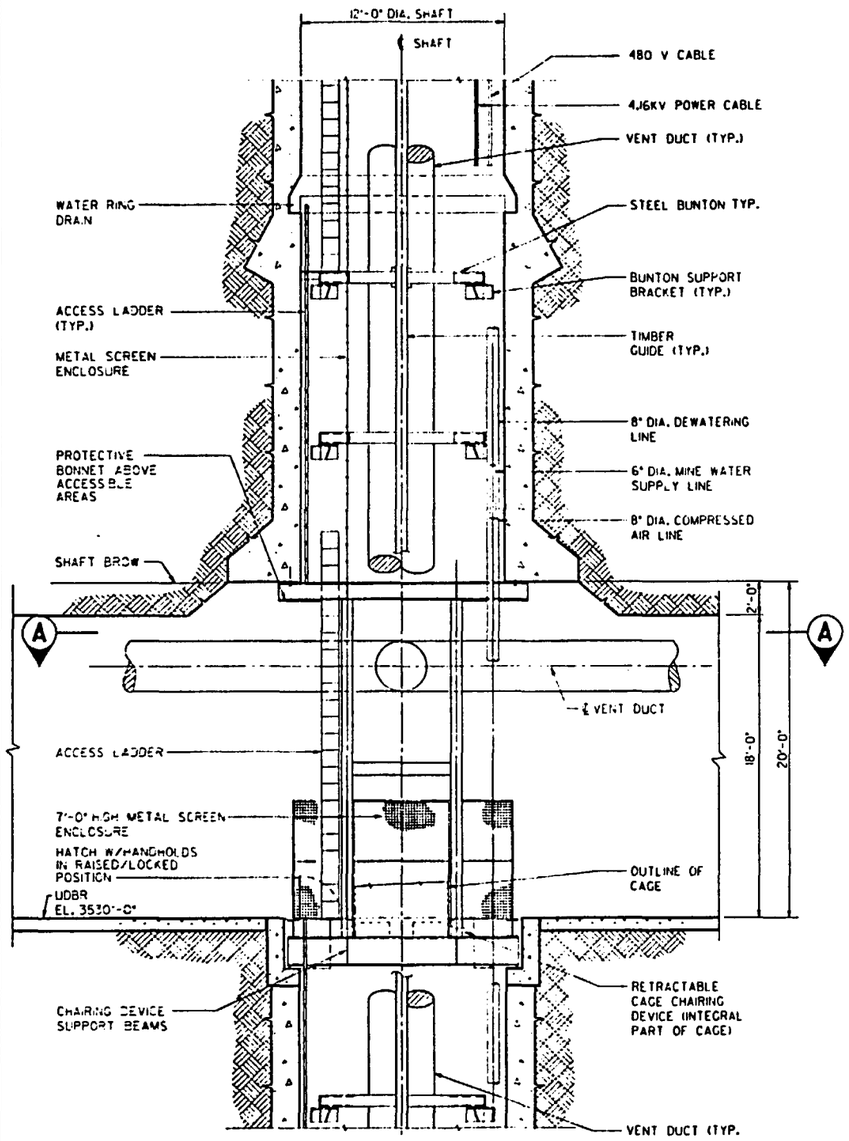


VERTICAL SECTION (LOOKING NORTH)
SCALE: 1/4"=1'-0"

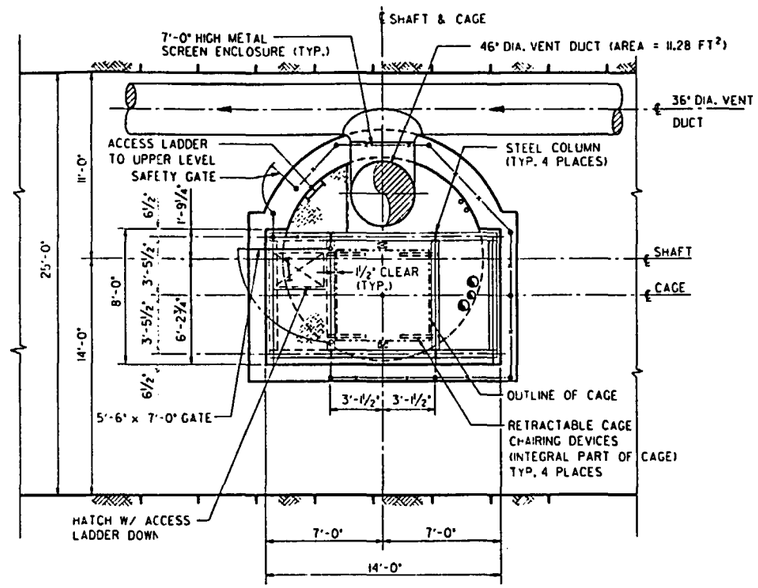


SECTION A-A
SCALE: 1/4"=1'-0"

SI APERTURE CARD

Also Available On Aperture Card

REFERENCE DRAWINGS

| | |
|---|---|
| FS-GA-0091 | ES-I SHAFT, MTL SHAFT STATION SECTIONS |
| FS-GA-0095 | ES-I SHAFT, TAIL SHAFT SECTIONS |

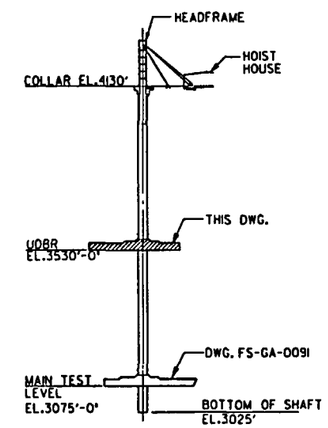


ES-I SHAFT
KEY ELEVATION
SCALE = NONE

8901040172-43

1/4" = 1'-0" 0 4 8 12 FT.

QUALITY LEVELS OF THE ITEMS OR ACTIVITIES ON THIS DRAWING SHALL BE FOUND IN THE ESF QUALITY ASSURANCE LEVEL ASSIGNMENT SHEETS. (QALAS)

| ITEM | REQD | MATERIAL | DESCRIPTION | DWG. NO. |
|---|---|---|---|---|

U.S. DEPARTMENT OF ENERGY
NEVADA OPERATIONS OFFICE — LAS VEGAS, NEVADA

| APPROVALS | | DATE |
|---|---|---|
| DESIGN | IAL | 12-7-88 |
| DRAWN | AAS | 12-8-88 |
| CHECKED | JAH | 12-8-88 |
| PROJ. DES. MGR. | B.CW. | 12-8-88 |
| Q.A.R. | A.AU | 12-8-88 |
| PROJ. MGR. | 717 | 12-8-88 |
| ACCEPTED TMPO | [illegible] | 12-13-88 |

FENIX & SCISSON, INC.
LAS VEGAS, NEVADA

YUCCA MOUNTAIN PROJECT
EXPLORATORY SHAFT FACILITY
ES-I SHAFT, UDBR SHAFT STATION
SECTIONS

| W.B.S. NO. | DRAWING NO. | REV. |
|---|---|---|
| 1.2.6.4.1 | FS-GA-0085 | C |

| SCALE | DATE | SHEET |
|---|---|---|
| 1/4"=1'-0" | | 1 OF 1 |

| NO. | DATE | REVISION | DES. | DRN. | CHK. | P.D.M. | Q.A.R. | P.M. | YMPO |
|---|---|---|---|---|---|---|---|---|---|

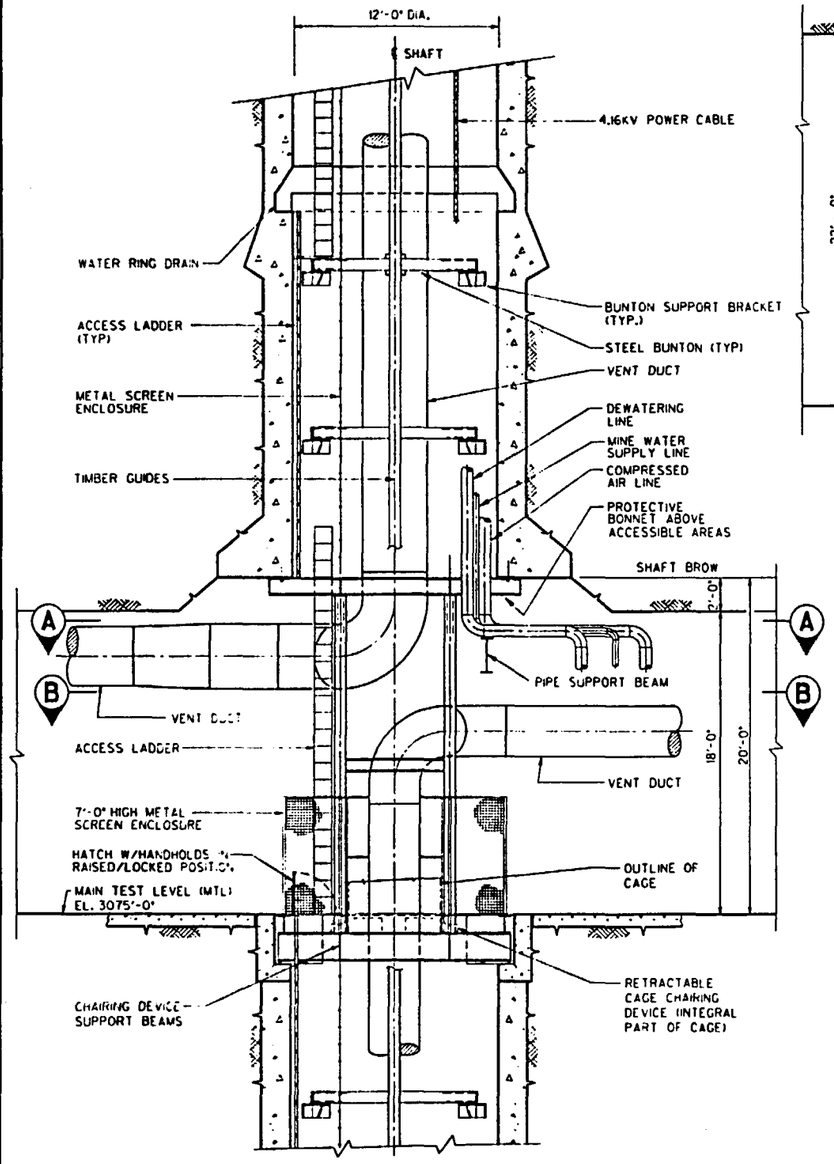


VERTICAL SECTION (LOOKING NORTH)
SCALE: 1/4"=1'-0"

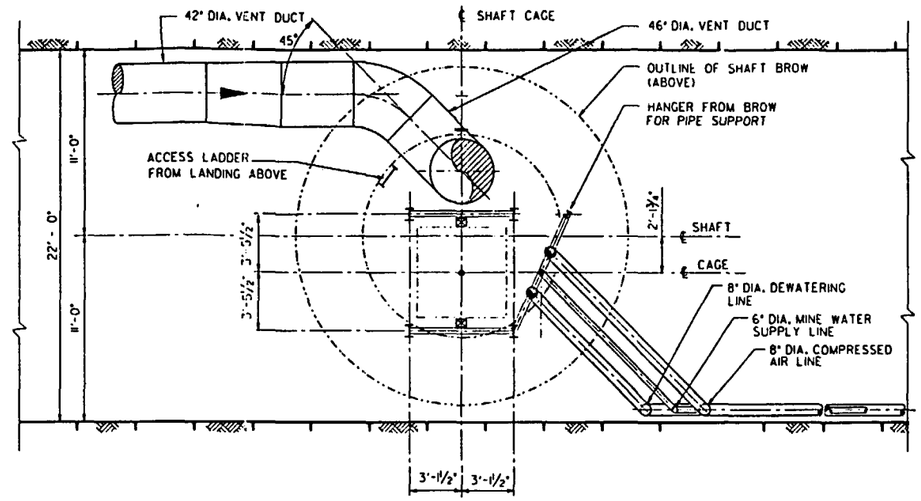


SECTION A-A
SCALE: 1/4"=1'-0"

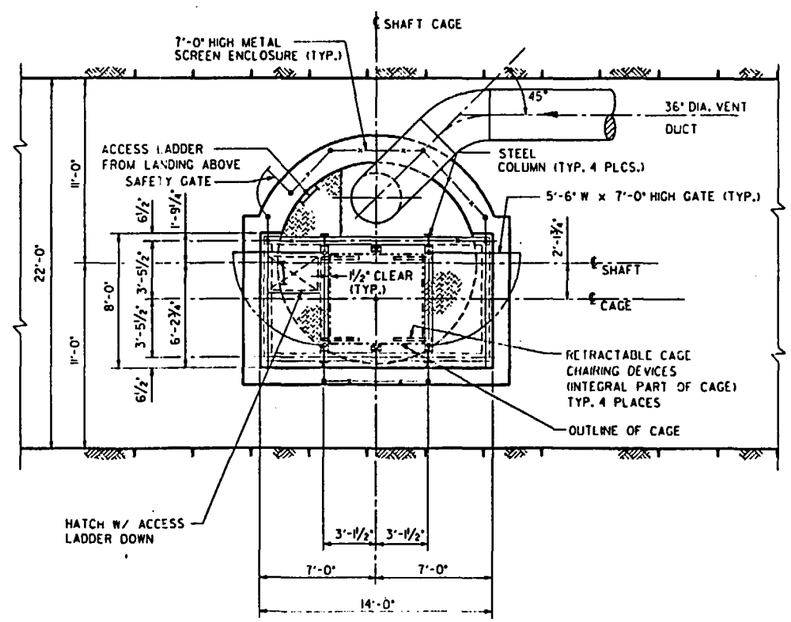


SECTION B-B
SCALE: 1/4"=1'-0"
-0091
-0095

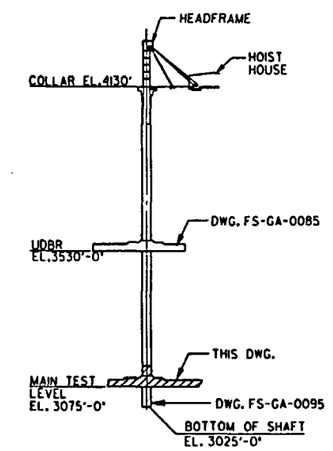


ES-1 SHAFT
KEY ELEVATION
SCALE: NONE

APERTURE CARD

Also Available On Aperture Card

## REFERENCE DRAWINGS

| | |
|---|---|
| FS-GA-0050 | ES-1 SHAFT - GENERAL ARRANGEMENT CROSS - SECTIONS |
| FS-GA-0085 | ES-1 SHAFT, UDBR SHAFT STATION SECTIONS |
| FS-GA-0095 | ES-1 SHAFT, TAIL SHAFT SECTIONS |

8901040172-44

1/4" = 1'-0" 0 4 8 12 FT.

QUALITY LEVELS OF THE ITEMS OR ACTIVITIES ON THIS DRAWING SHALL BE FOUND IN THE ESF QUALITY ASSURANCE LEVEL ASSIGNMENT SHEETS. (QALAS)

| ITEM | REQD | MATERIAL | DESCRIPTION | DWG. NO. |
|---|---|---|---|---|

**U.S. DEPARTMENT OF ENERGY**
NEVADA OPERATIONS OFFICE — LAS VEGAS, NEVADA

| APPROVALS | | DATE |
|---|---|---|
| DESIGN | J.A.L. | 12-7-88 |
| DRAWN | D.B. | 12-7-88 |
| CHECKED | J.A.H. | 12-8-88 |
| PROJ. DES. MGR. | D.CH. | 12-8-88 |
| Q.A.R. | A.ALI | 12-8-88 |
| PROJ. MGR. | 717 | 12-8-88 |
| ACCEPTED YMPO | | 12-15-88 |

**FENIX & SCISSON, INC.**
LAS VEGAS, NEVADA

YUCCA MOUNTAIN PROJECT
EXPLORATORY SHAFT FACILITY
ES-1 SHAFT, MTL SHAFT STATION
**SECTIONS**

| W.B.S. NO. | DRAWING NO. | REV. |
|---|---|---|
| 1.2.6.6.0 | FS-GA-0091 | C |
| SCALE: NOTED | DATE | SHEET 1 OF 1 |

| NO. | DATE | REVISION | DES. | DRN. | CHK. | P.D.M. | O.A.R. | P.M. | YMPO |
|---|---|---|---|---|---|---|---|---|---|

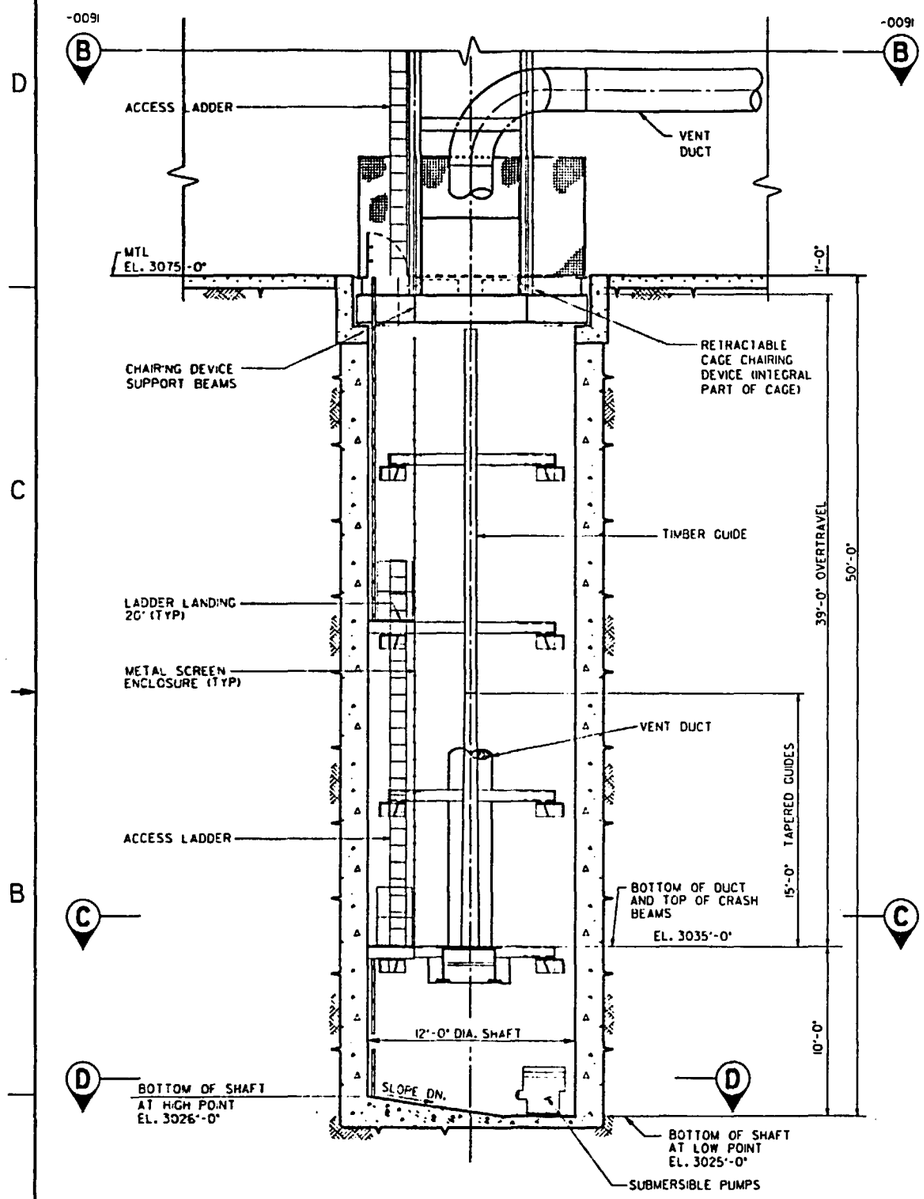


VERTICAL SECTION (LOOKING NORTH)
SCALE: 1/4" = 1'-0"

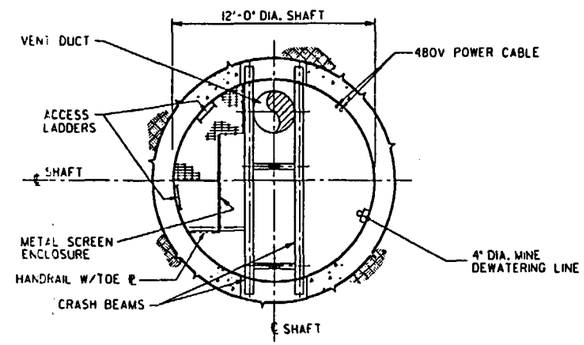


SECTION C-C
SCALE: 1/4"=1'-0"

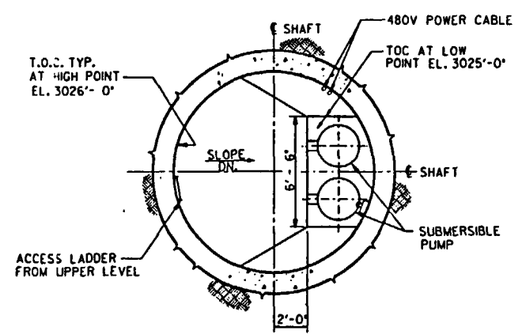


SECTION D-D
SCALE: 1/4"=1'-0"

SI APERTURE CARD

Also Available On Aperture Card

## REFERENCE DRAWINGS

| | |
|---|---|
| FS-GA-0050 | ES-I SHAFT - GENERAL ARRANGEMENT CROSS - SECTIONS |
| FS-GA-0085 | ES-I SHAFT, UDBR SHAFT STATION SECTIONS |
| FS-GA-0091 | ES-I SHAFT, TAIL SHAFT SECTIONS |

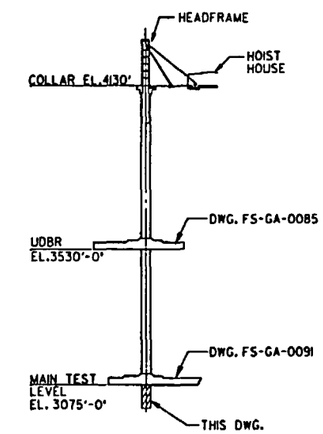


ES-I SHAFT

KEY ELEVATION
SCALE: NONE

8901040172-45

1/4" = 1'-0" 0 4 8 12 FT.

QUALITY LEVELS OF THE ITEMS OR ACTIVITIES ON THIS DRAWING SHALL BE FOUND IN THE ESF QUALITY ASSURANCE LEVEL ASSIGNMENT SHEETS. (QALAS)

| ITEM | REQD | MATERIAL | DESCRIPTION | DWG. NO. |
|---|---|---|---|---|

**U.S. DEPARTMENT OF ENERGY**
NEVADA OPERATIONS OFFICE — LAS VEGAS, NEVADA

| APPROVALS | | DATE |
|---|---|---|
| DESIGN | I.A.L. | 12-7-88 |
| DRAWN | D.B. | 12-7-88 |
| CHECKED | J.A.H. | 12-8-88 |
| PROJ. DES. MGR. | B.C.M. | 12-8-88 |
| Q.A.R. | A. ALI | 12-8-88 |
| PROJ. MGR. | J.J.J. | 12-8-88 |
| ACCEPTED YMPO | | 12-15-88 |

**FENIX & SCISSON, INC.**
LAS VEGAS, NEVADA

YUCCA MOUNTAIN PROJECT
EXPLORATORY SHAFT FACILITY
ES-I SHAFT, TAIL SHAFT
**SECTIONS**

| W.B.S. NO. | DRAWING NO. | REV. |
|---|---|---|
| 1.2.6.4.1 | FS-GA-0095 | C |
| SCALE: NOTED | DATE | SHEET 1 OF 1 |

| NO. | DATE | REVISION | DES. | DRN. | CHK. | P.D.M. | O.A.R. | P.M. | YMPO |
|---|---|---|---|---|---|---|---|---|---|

## ES-2

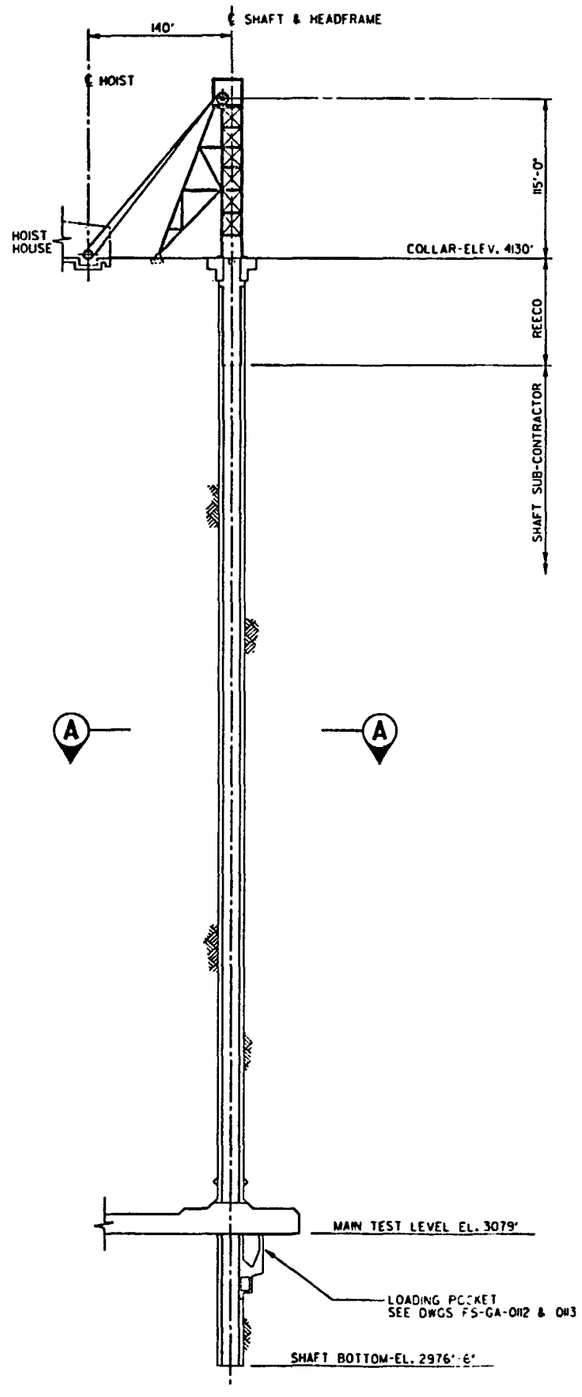


ES-2 SHAFT VERTICAL SECTION

SCALE: NONE

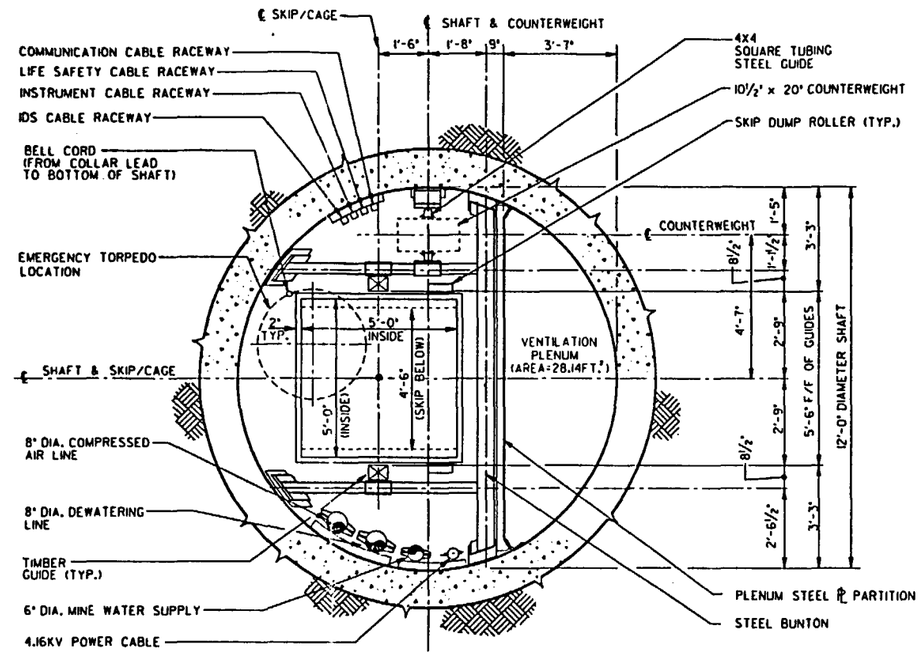


SECTION (A-A)
SCALE: ½"=1'-0"

½" = 1'-0" 0 1 2 3 4 5 6 FT.

QUALITY LEVELS OF THE ITEMS OR ACTIVITIES ON THIS DRAWING SHALL BE FOUND IN THE ESF QUALITY ASSURANCE LEVEL ASSIGNMENT SHEETS. (OALAS)

## REFERENCE DRAWINGS

| | |
|---|---|
| FS-GA-0040 | ES-2 SURFACE, SHAFT COLLAR - OPERATION PLANS & SECTION |
| FS-GA-0045 | ES-1 & ES-2 SURFACE, HOIST HOUSE PLAN & SECTION |
| FS-GA-0110 | ES-2 SHAFT, MTL STATION SECTIONS |
| FS-GA-0112 | ES-2 SHAFT, MTL SHAFT STATION & TAIL SHAFT SECTIONS |
| FS-GA-0113 | ES-2 SHAFT, MTL SHAFT STATION & TAIL SHAFT VERTICAL SECTIONS |

SI APERTURE CARD

Also Available On Aperture Card

8901040172-46

| ITEM | REQD | MATERIAL | DESCRIPTION | DWG. NO. |
|---|---|---|---|---|

**U.S. DEPARTMENT OF ENERGY**
NEVADA OPERATIONS OFFICE — LAS VEGAS, NEVADA

| APPROVALS | | DATE |
|---|---|---|
| DESIGN | J.A.L. | 12-7-88 |
| DRAWN | D.L.C | 12-7-88 |
| CHECKED | J.A.L | 12-8-88 |
| PROJ. DES. ENG. | B.C.M. | 12-8-88 |
| Q.A.R. | A. ALI | 12-8-88 |
| PROJ. MGR. | T.C.J | 12-8-88 |
| ACCEPTED YMPO | | 12-21-88 |

**FENIX & SCISSON, INC.**
LAS VEGAS, NEVADA

YUCCA MOUNTAIN PROJECT
EXPLORATORY SHAFT FACILITY
ES-2 SHAFT - GENERAL ARRANGEMENT
**CROSS - SECTIONS**

| W.B.S. NO. | DRAWING NO. | REV. |
|---|---|---|
| 1.2.6.7.4 | FS-GA-0100 | C |
| SCALE: NOTED | DATE | SHEET 1 OF 1 |

| NO. | DATE | REVISION | DES. | DRN. | CHK. | P.D.M. | O.A.R. | P.M. | YMPO |
|---|---|---|---|---|---|---|---|---|---|

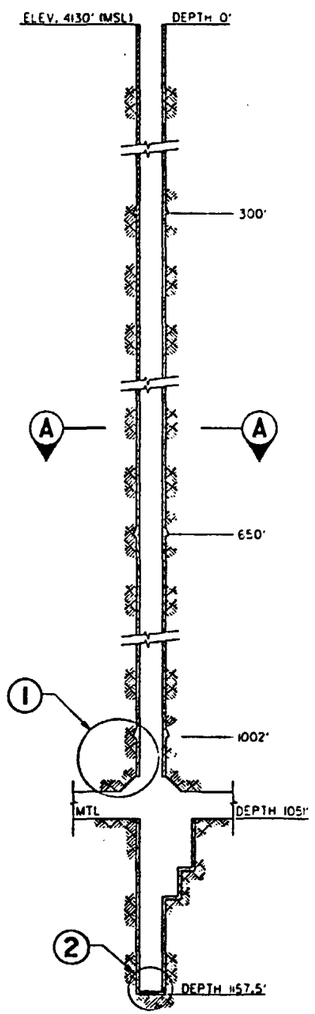


ES-2 PROFILE
SCALE: NONE

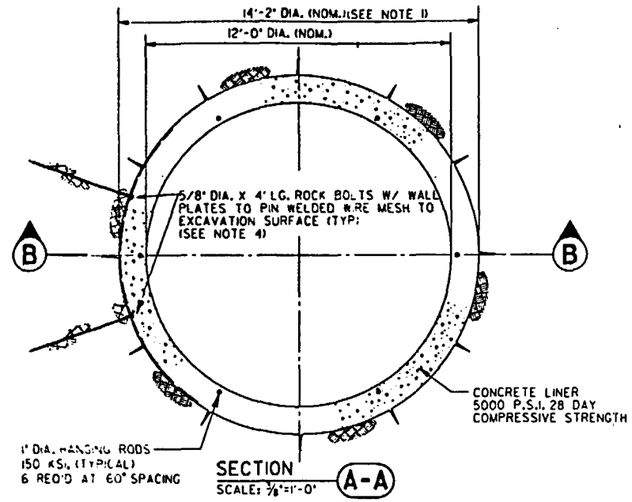


SECTION A-A
SCALE: 3/8"=1'-0"

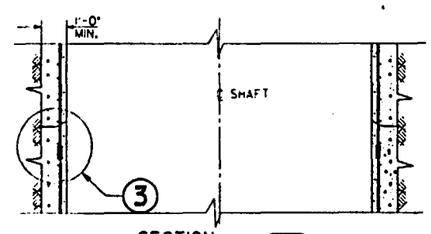


SECTION B-B
SCALE: 3/8"=1'-0"

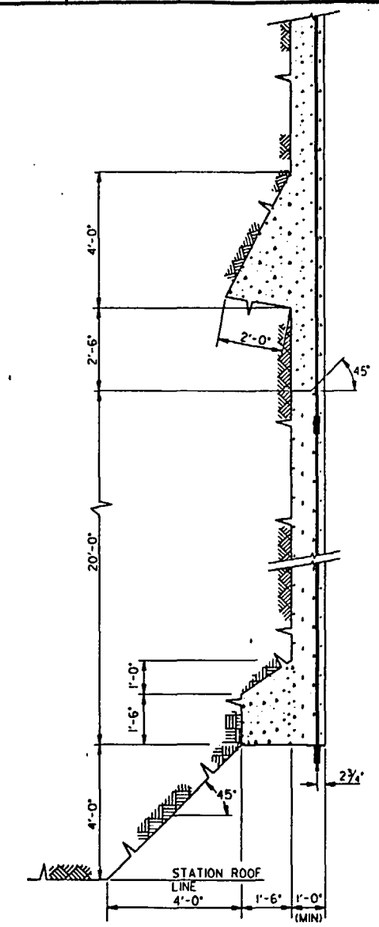


TYPICAL LINER FOUNDATION KEY AND STATION BROW ARRANGEMENT
DETAIL 1
SCALE: 1/2"=1'-0"

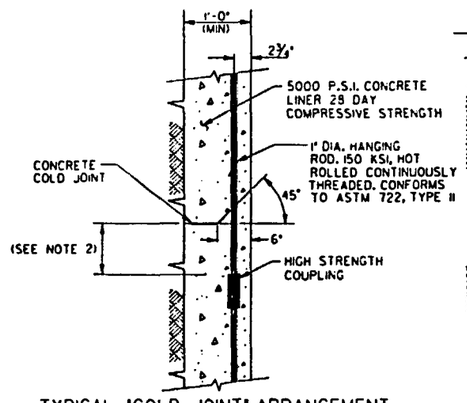


TYPICAL 'COLD JOINT' ARRANGEMENT
DETAIL 3
SCALE: 1"=1'-0"

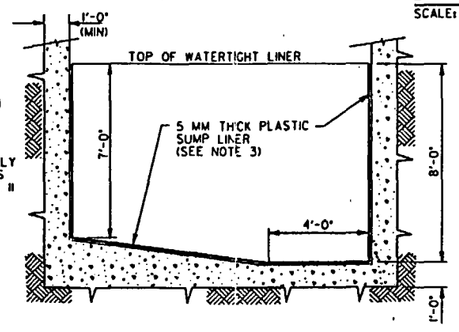


GENERAL ARRANGEMENT OF WATERTIGHT LINER IN SHAFT SUMP
DETAIL 2
SCALE: 3/8"=1'-0"

1" = 1'-0" 0 1 2 3 FT.
1/2" = 1'-0" 0 1 2 3 4 5 6 FT.
3/8" = 1'-0" 0 1 2 3 4 5 6 7 8 FT.

QUALITY LEVELS OF THE ITEMS OR ACTIVITIES ON THIS DRAWING SHALL BE FOUND IN THE ESF QUALITY ASSURANCE LEVEL ASSIGNMENT SHEETS. (QALAS)

## NOTES

1. EXCAVATION MUST ALLOW 12" MINIMUM CONCRETE THICKNESS.
2. TO BE DETERMINED PENDING FINAL DESIGN OF CURB RING/BLAST RING.
3. 5 MM THICK 'BEKAPLAST' OR EQUIVALENT W/ THERMAL-WELDED CONCRETE ANCHORS.
4. ROCK BOLTS SET AT 5 FT. HORIZONTAL AND VERTICAL SPACING.
5. ROCK BOLTS TO HAVE EXPANSION SHELL ANCHORS.

## REFERENCE DRAWINGS

| | |
|---|---|
| FS-GA-0063 | ES-1 SHAFT - CONCRETE FORM SECTION, PLANS & DETAIL |
| FS-GA-0100 | ES-2 SHAFT - GENERAL ARRANGEMENT CROSS - SECTIONS |
| FS-GA-0110 | ES-2 SHAFT, MTL STATION SECTIONS |
| FS-GA-0112 | ES-2 SHAFT, MTL SHAFT STATION & TAIL SHAFT SECTIONS |
| FS-GA-0113 | ES-2 SHAFT, MTL SHAFT STATION & TAIL SHAFT VERTICAL SECTIONS |

SI APERTURE CARD

Also Available On Aperture Card

8901040172-47

| ITEM | REQD | MATERIAL | DESCRIPTION | DWG. NO. |
|---|---|---|---|---|

**U.S. DEPARTMENT OF ENERGY**
NEVADA OPERATIONS OFFICE — LAS VEGAS, NEVADA

| APPROVALS | | DATE |
|---|---|---|
| DESIGN | [illegible] | 12/6/88 |
| DRAWN | D.B. | 8-2-88 |
| CHECKED | JAH | 12-8-88 |
| PROJ. DES. MGR. | B.CH. | 12-9-88 |
| Q.A.R. | A.ALI | 12-6-88 |
| PROJ. MGR. | [illegible] | 12-9-88 |
| ACCEPTED YMPO | [illegible] | 12-15-88 |

**FENIX & SCISSON, INC.**
LAS VEGAS, NEVADA

YUCCA MOUNTAIN PROJECT
EXPLORATORY SHAFT FACILITY
ES-2 SHAFT LINER
**SECTIONS AND DETAILS**

| W.B.S. NO. | DRAWING NO. | REV. |
|---|---|---|
| 1.2.6.5.1 | FS-GA-0102 | C |

| SCALE | DATE | |
|---|---|---|
| NOTED | | SHEET 1 OF 1 |

| NO. | DATE | REVISION | DES. | DRN. | CHK. | P.D.M. | Q.A.R. | P.M. | YMPO |
|---|---|---|---|---|---|---|---|---|---|

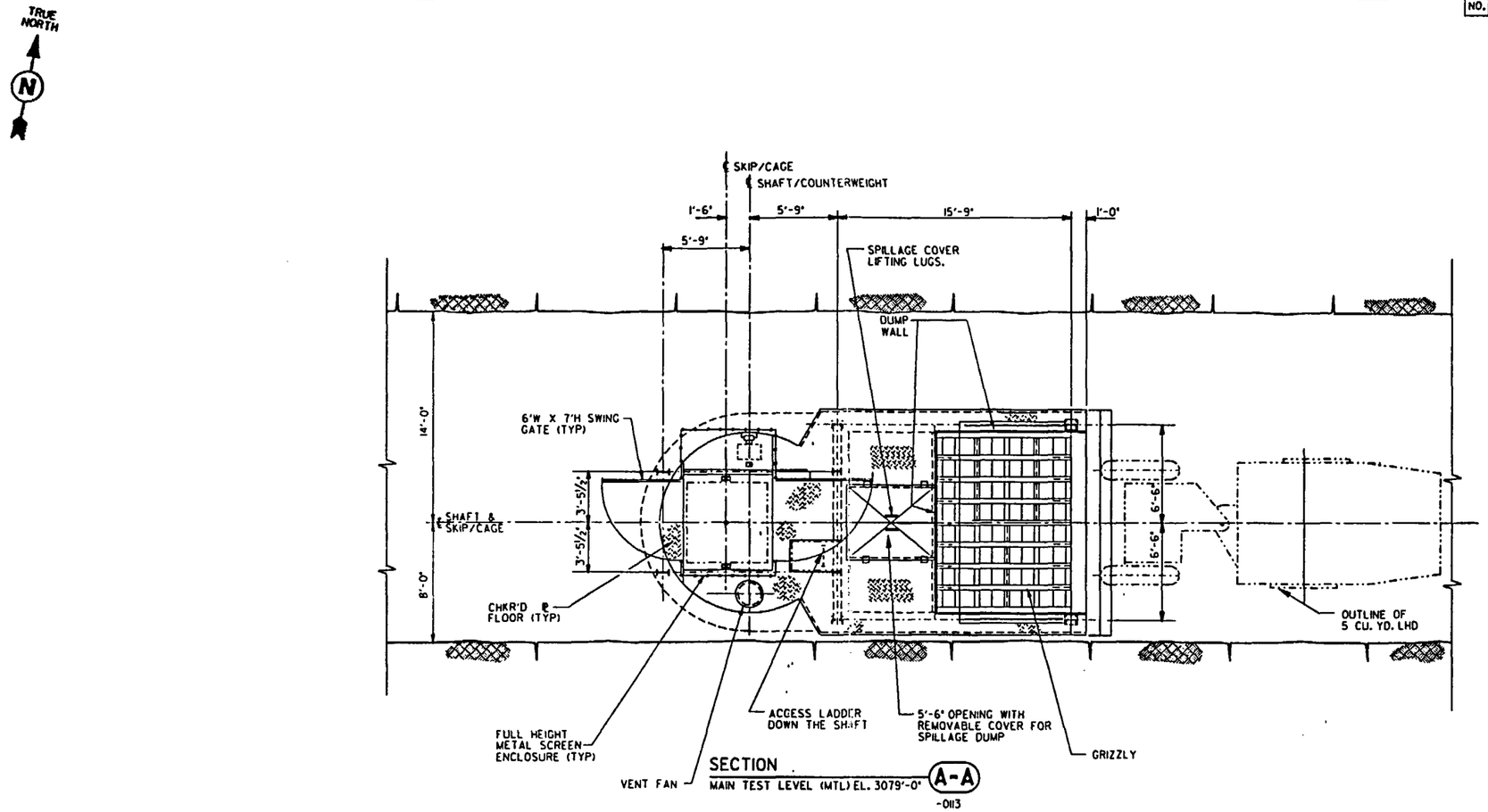


SECTION A-A
MAIN TEST LEVEL (MTL) EL. 3079'-0"
-0113

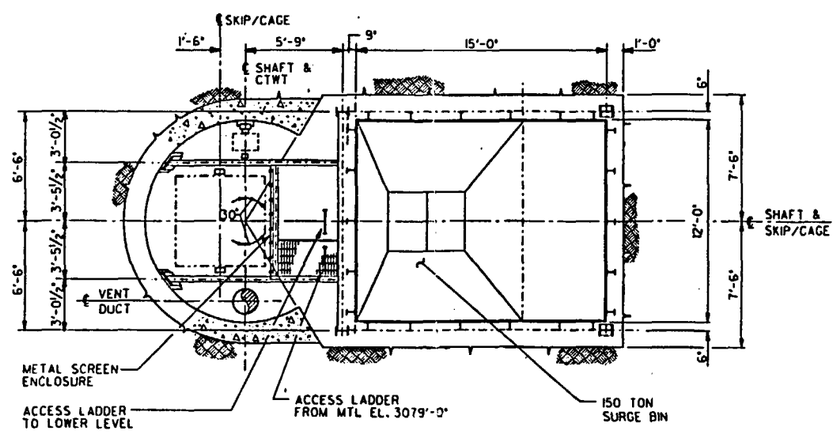


SECTION B-B
-0113

¼" = 1'-0" 0 4 8 12 FT.

QUALITY LEVELS OF THE ITEMS OR ACTIVITIES ON THIS DRAWING SHALL BE FOUND IN THE ESF QUALITY ASSURANCE LEVEL ASSIGNMENT SHEETS. (QALAS)

## REFERENCE DRAWINGS

| | |
|---|---|
| FS-GA-0100 | ES-2 SHAFT - GENERAL ARRANGEMENT CROSS - SECTIONS |
| FS-GA-0112 | ES-2 SHAFT - MTL SHAFT STATION & TAIL SHAFT SECTIONS |
| FS-GA-0113 | ES-2 SHAFT - MTL SHAFT STATION & TAIL SHAFT VERTICAL SECTIONS |

SI APERTURE CARD

Also Available On Aperture Card

8901040172-48

| ITEM | REQD | MATERIAL | DESCRIPTION | DWG. NO. |
|---|---|---|---|---|

**U.S. DEPARTMENT OF ENERGY**
NEVADA OPERATIONS OFFICE — LAS VEGAS, NEVADA

| APPROVALS | | DATE |
|---|---|---|
| DESIGN | I.A.C. | 12-7-88 |
| DRAWN | D.B. | 12-8-88 |
| CHECKED | J.A.H. | 12-8-88 |
| PROJ. DES. MGR. | B.CH. | 12-8-88 |
| Q.A.R. | A.A.C. | 12-8-88 |
| PROJ. MGR. | [illegible] | 12-8-88 |
| ACCEPTED TMPO | [illegible] | 12-13-88 |

**FENIX & SCISSON, INC.**
LAS VEGAS, NEVADA

YUCCA MOUNTAIN PROJECT
EXPLORATORY SHAFT FACILITY
ES-2 SHAFT, MTL STATION
**SECTIONS**

| W.B.S. NO. | DRAWING NO. | REV. |
|---|---|---|
| 1.2.6.6.0 | FS-GA-0110 | C |
| SCALE 1/4"=1'-0" | DATE | SHEET 1 OF 1 |

| NO. | DATE | REVISION | DES. | DRN. | CHK. | P.D.M. | O.A.R. | P.M. | YMPO |
|---|---|---|---|---|---|---|---|---|---|

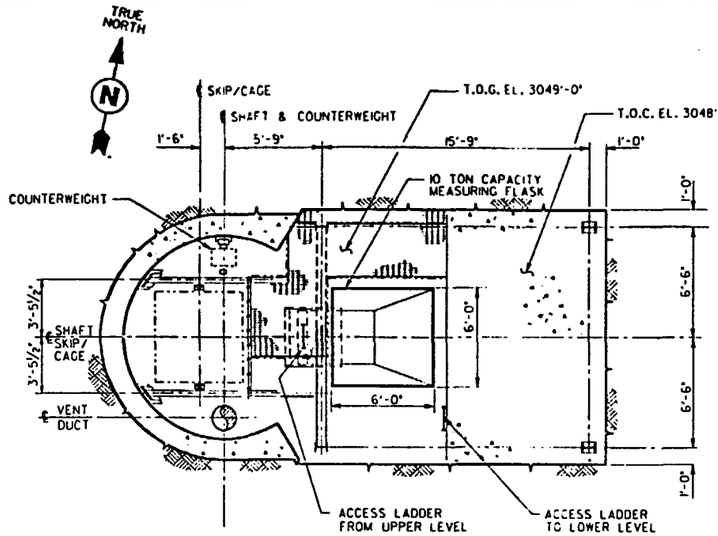


SECTION C-C -0113

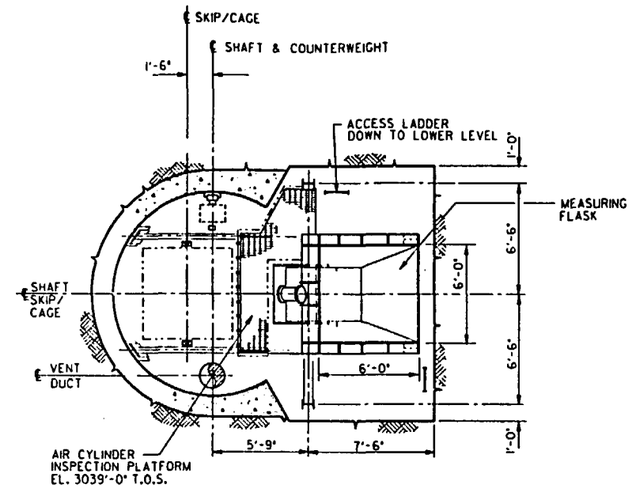


SECTION D-D -0113

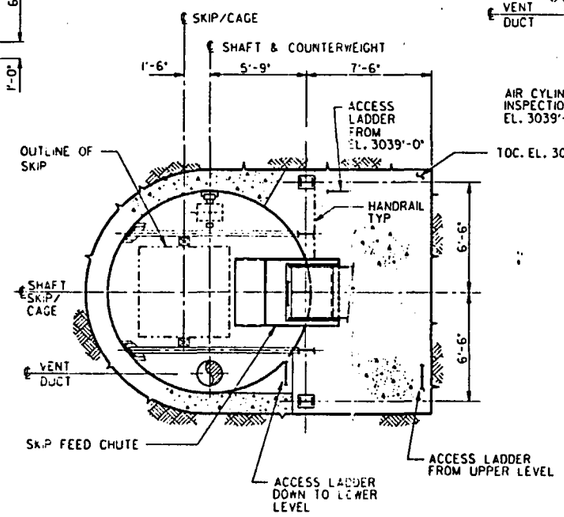


SECTION E-E -0113

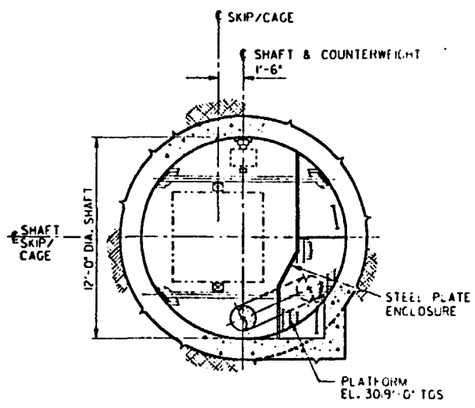


SECTION F-F -0113

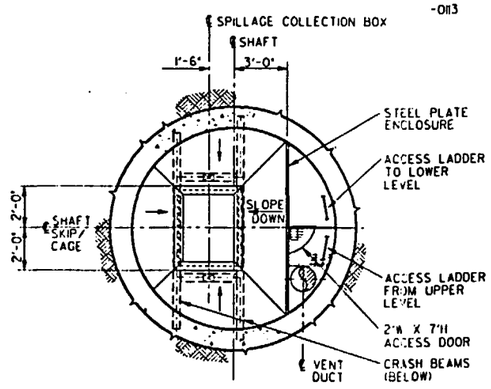


SECTION G-G -0113

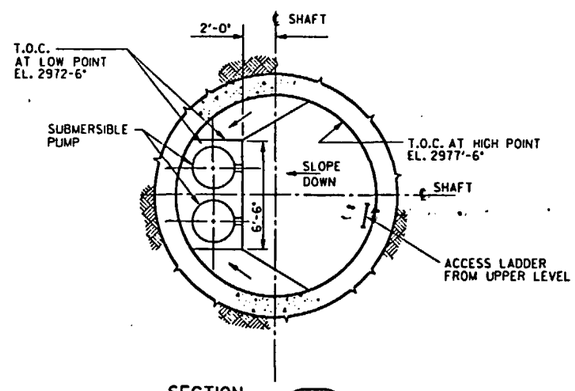


SECTION H-H -0113

## REFERENCE DRAWINGS

| | |
|---|---|
| FS-GA-0040 | ES-2 SURFACE, SHAFT COLLAR - OPERATION PLANS & SECTION |
| FS-GA-0100 | ES-2 SHAFT - GENERAL ARRANGEMENT CROSS - SECTIONS |
| FS-GA-0110 | ES-2 SHAFT, MTL STATION SECTIONS |
| FS-GA-0113 | ES-2 SHAFT, MTL SHAFT STATION & TAIL SHAFT VERTICAL SECTIONS |

SI APERTURE CARD

Also Available On Aperture Card

8901040172-49

¼" = 1'-0" 0 4 8 12 FT.

QUALITY LEVELS OF THE ITEMS OR ACTIVITIES ON THIS DRAWING SHALL BE FOUND IN THE ESF QUALITY ASSURANCE LEVEL ASSIGNMENT SHEETS. (QALAS)

| ITEM | REQD | MATERIAL | DESCRIPTION | DWG. NO. |
|---|---|---|---|---|

**U.S. DEPARTMENT OF ENERGY**
NEVADA OPERATIONS OFFICE — LAS VEGAS, NEVADA

| APPROVALS | | DATE |
|---|---|---|
| DESIGN | IAC | 12-7-88 |
| DRAWN | D.B. | 12-8-88 |
| CHECKED | JAH | 12-8-88 |
| PROJ. DES. MGR. | B.CH. | 12-8-88 |
| Q.A.R. | A.ALI | 12-8-88 |
| PROJ. MGR. | 717 | 12-9-88 |
| ACCEPTED TMPO | [illegible] | 12-13-88 |

**FENIX & SCISSON, INC.**
LAS VEGAS, NEVADA

YUCCA MOUNTAIN PROJECT
EXPLORATORY SHAFT FACILITY
ES-2 SHAFT, MTL SHAFT STA. & TAIL SHAFT
**SECTIONS**

| W.B.S. NO. | DRAWING NO. | REV. |
|---|---|---|
| 1.2.6.6.0 | FS-GA-0112 | C |
| SCALE 1/4"=1'-0" | DATE | SHEET 1 OF 1 |

| NO. | DATE | REVISION | DES. | DRN. | CHK. | P.D.M. | O.A.R. | P.M. | YMPO |
|---|---|---|---|---|---|---|---|---|---|

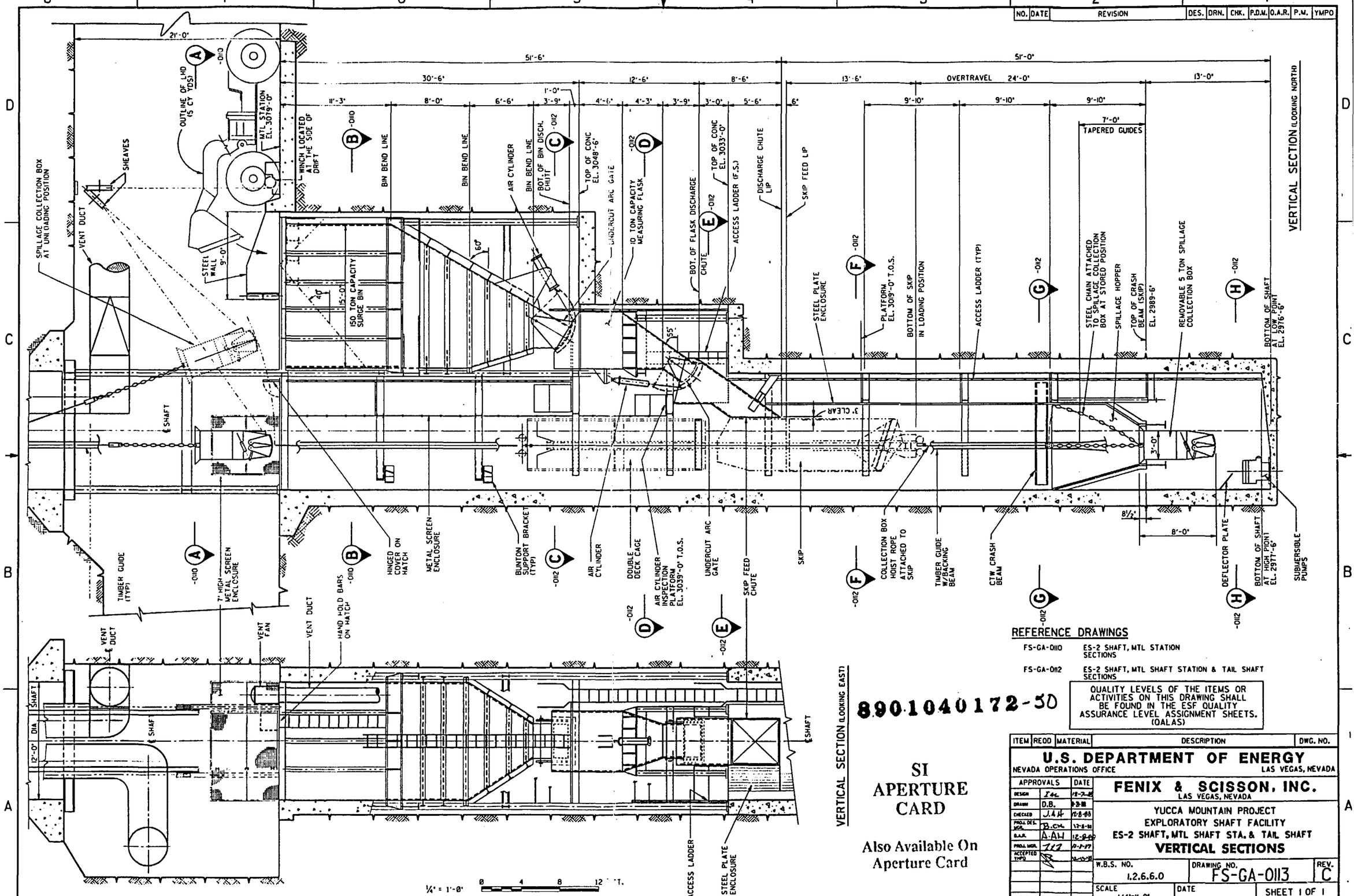


## REFERENCE DRAWINGS

FS-GA-0110 ES-2 SHAFT, MTL STATION SECTIONS

FS-GA-0112 ES-2 SHAFT, MTL SHAFT STATION & TAIL SHAFT SECTIONS

QUALITY LEVELS OF THE ITEMS OR ACTIVITIES ON THIS DRAWING SHALL BE FOUND IN THE ESF QUALITY ASSURANCE LEVEL ASSIGNMENT SHEETS. (QALAS)

890.1040172-50

SI APERTURE CARD

Also Available On Aperture Card

| ITEM | REQD | MATERIAL | DESCRIPTION | DWG. NO. |
|---|---|---|---|---|

**U.S. DEPARTMENT OF ENERGY**
NEVADA OPERATIONS OFFICE — LAS VEGAS, NEVADA

| APPROVALS | | DATE |
|---|---|---|
| DESIGN | [illegible] | 12-7-88 |
| DRAWN | D.B. | 9-3-88 |
| CHECKED | J.A.H. | 12-8-88 |
| PROJ. DES. MGR. | B.CHL | 12-8-88 |
| Q.A.R. | A.AH | 12-9-88 |
| PROJ. MGR. | [illegible] | 12-12-88 |
| ACCEPTED YMPO | [illegible] | 12-15-88 |

**FENIX & SCISSON, INC.**
LAS VEGAS, NEVADA

YUCCA MOUNTAIN PROJECT
EXPLORATORY SHAFT FACILITY
ES-2 SHAFT, MTL SHAFT STA. & TAIL SHAFT
**VERTICAL SECTIONS**

| W.B.S. NO. | DRAWING NO. | REV. |
|---|---|---|
| 1.2.6.6.0 | FS-GA-0113 | C |
| SCALE 1/4"=1'-0" | DATE | SHEET 1 OF 1 |

| NO. | DATE | REVISION | DES. | DRN. | CHK. | P.D.M. | O.A.R. | P.M. | YMPO |
|---|---|---|---|---|---|---|---|---|---|

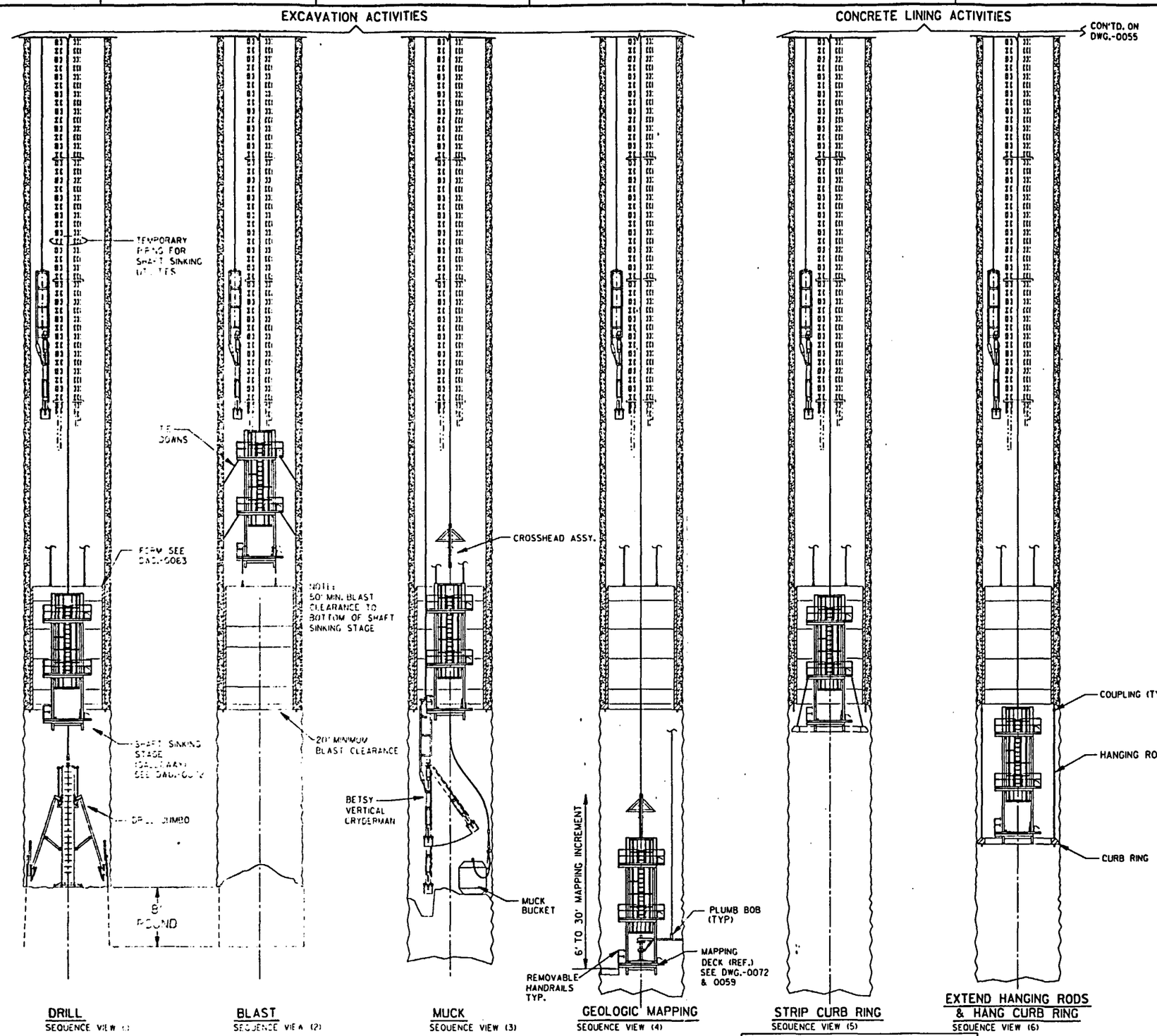


QUALITY LEVELS OF THE ITEMS OR ACTIVITIES ON THIS DRAWING SHALL BE FOUND IN THE ESF QUALITY ASSURANCE LEVEL ASSIGNMENT SHEETS. (QALAS)

## NOTES

1. THIS DESIGN SEQUENCE CONSISTS OF (3) RELATED DRAWINGS
   FS-GA-0054 - SEQUENCE VIEWS (1) THRU (6).
   FS-GA-0055 - SEQUENCE VIEWS (7) THRU (12).
   FS-GA-0056 - SEQUENCE VIEWS (13) THRU (14).
2. AT SELECTED LOCATIONS, SOME TO BE FIELD DETERMINED, TESTING ACTIVITIES WILL REQUIRE CONSTRUCTION TO STOP FOR EXTENDED PERIODS, AFTER THE GEOLOGIC MAPPING SEQUENCE IS COMPLETED. REFER TO DRAWINGS FS-GA-0058, FS-GA-0059 & FS-GA-0163.

## REFERENCE DRAWINGS

| | |
|---|---|
| FS-GA-0055 | ES-1 SHAFT SINKING SEQUENCE SHEET 2 |
| FS-GA-0056 | ES-1 SHAFT SINKING SEQUENCE SHEET 3 |
| FS-GA-0058 | ES-1 SHAFT TEST ARRANGEMENTS - SHEET 1 |
| FS-GA-0059 | ES-1 SHAFT TEST ARRANGEMENTS - SHEET 2 |
| FS-GA-0063 | ES-1 SHAFT - CONCRETE FORM SECTION, PLANS & DETAIL |
| FS-GA-0072 | ES-1 SHAFT SINKING STAGE ELEVATIONS & SECTIONS |

SI APERTURE CARD

Also Available On Aperture Card

8901040172-51

| ITEM | REQD | MATERIAL | DESCRIPTION | DWG. NO. |
|---|---|---|---|---|

**U.S. DEPARTMENT OF ENERGY**
NEVADA OPERATIONS OFFICE — LAS VEGAS, NEVADA

| APPROVALS | | DATE |
|---|---|---|
| DESIGN | [illegible] | 12-8-88 |
| DRAWN | J.O.E | 9-2-88 |
| CHECKED | J.A.H | 12-8-88 |
| PROJ. DES. MGR. | D.C.H. | 12-8-88 |
| O.A.R. | BH | 12-8-88 |
| PROJ. MGR. | [illegible] | 12-8-88 |
| ACCEPTED YMPO | [illegible] | 12-15-88 |

**FENIX & SCISSON, INC.**
LAS VEGAS, NEVADA

YUCCA MOUNTAIN PROJECT
EXPLORATORY SHAFT FACILITY
ES-1 SHAFT SINKING SEQUENCE
**SHEET 1**

| W.B.S. NO. | DRAWING NO. | REV. |
|---|---|---|
| 1.2.6.4.1 | FS-GA-0054 | C |
| SCALE 1/8"=1'-0" | DATE | SHEET 1 OF 1 |

## CONCRETE LINING ACTIVITIES

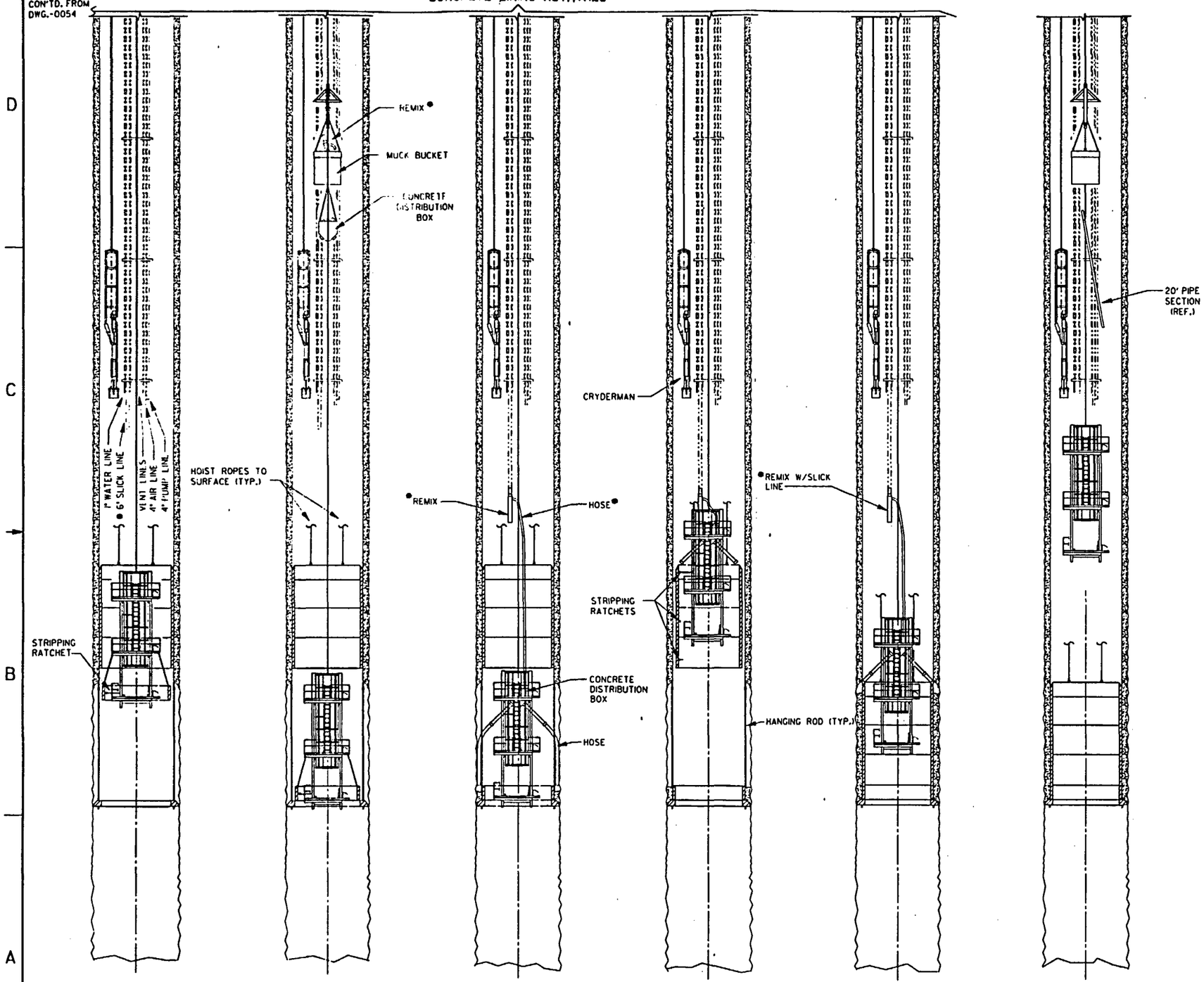


STRIP PANEL "A"
SEQUENCE VIEW (7)

SET PANEL "A"
LEVEL, ALIGN, SCRIBE & BLOCK
SEQUENCE VIEW (8)

POUR CURB RING & PANEL "A"
SEQUENCE VIEW (9)

STRIP LINER FORM
PANELS B, C & D
SEQUENCE VIEW (10)

SET & POUR CONCRETE LINER
PANELS B, C & D
SEQUENCE VIEW (11)

EXTEND UTILITIES
SEQUENCE VIEW (12)

1/8" = 1'-0" 0 5 10 15 20 25 FT.

| NO. | DATE | REVISION | DES. | DRN. | CHK. | P.D.M. | Q.A.R. | P.M. | YMPO |
|---|---|---|---|---|---|---|---|---|---|

### NOTE

- 1. SLICK LINE CONCRETE DISTRIBUTION SYSTEM IS OPTIONAL. SLICK LINE & REMIX NOT REQUIRED IF CONCRETE BUCKETS ARE USED.

### REFERENCE DRAWINGS

| | |
|---|---|
| FS-GA-0054 | ES-1 SHAFT SINKING SEQUENCE SHEET 1 |
| FS-GA-0056 | ES-1 SHAFT SINKING SEQUENCE SHEET 3 |
| FS-GA-0062 | ES-1 SHAFT LINER SECTION & DETAILS |
| FS-GA-0072 | ES-1 SHAFT SINKING STAGE ELEVATIONS & SECTIONS |

SI APERTURE CARD

Also Available On Aperture Card

8901040172-52

QUALITY LEVELS OF THE ITEMS OR ACTIVITIES ON THIS DRAWING SHALL BE FOUND IN THE ESF QUALITY ASSURANCE LEVEL ASSIGNMENT SHEETS. (QALAS)

| ITEM | REQD | MATERIAL | DESCRIPTION | DWG. NO. |
|---|---|---|---|---|

**U.S. DEPARTMENT OF ENERGY**
NEVADA OPERATIONS OFFICE — LAS VEGAS, NEVADA

| APPROVALS | | DATE |
|---|---|---|
| DESIGN | [illegible] | 12-9-88 |
| DRAWN | J.O.E | 12-8-88 |
| CHECKED | J.A.H | 12-8-88 |
| PROJ. DES. MGR. | B.CH. | 12-8-88 |
| Q.A.R. | PBH | 12-8-88 |
| PROJ. MGR. | [illegible] | 12-8-88 |
| ACCEPTED YMPO | [illegible] | 12-13-88 |

**FENIX & SCISSON, INC.**
LAS VEGAS, NEVADA

YUCCA MOUNTAIN PROJECT
EXPLORATORY SHAFT FACILITY
ES-1 SHAFT SINKING SEQUENCE
**SHEET 2**

| W.B.S. NO. | DRAWING NO. | REV. |
|---|---|---|
| 1.2.6.4.1 | FS-GA-0055 | C |

| SCALE | DATE | SHEET 1 OF 1 |
|---|---|---|
| 1/8"=1'-0" | | |

| NO. | DATE | REVISION | DES. | DRN. | CHK. | P.D.M. | O.A.R. | P.M. | YMPO |
|---|---|---|---|---|---|---|---|---|---|

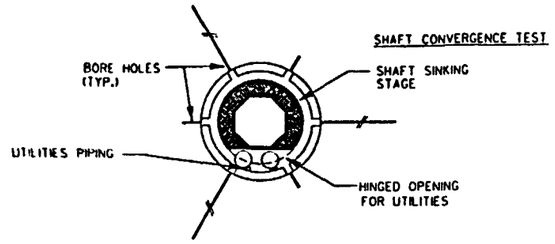


SECTION A-A

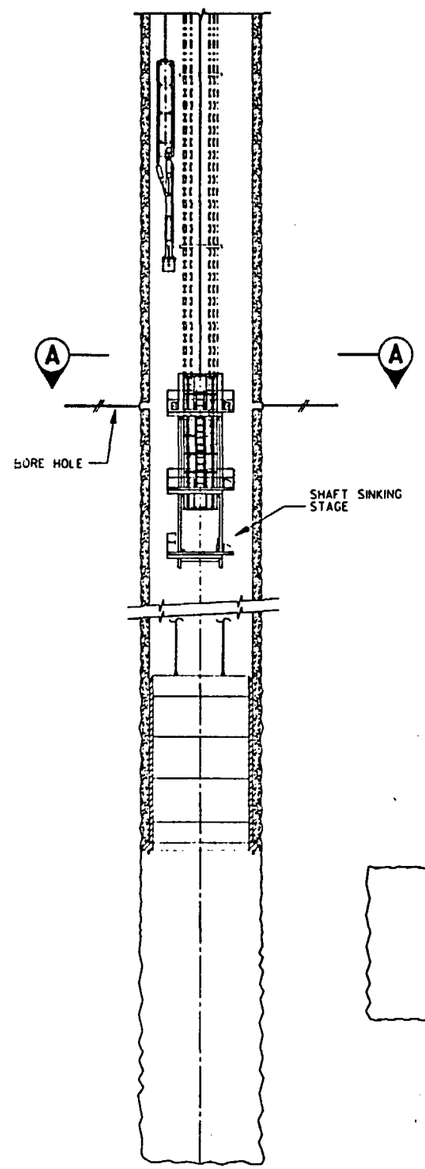


TEST MONITORING
SEQUENCE VIEW (13)

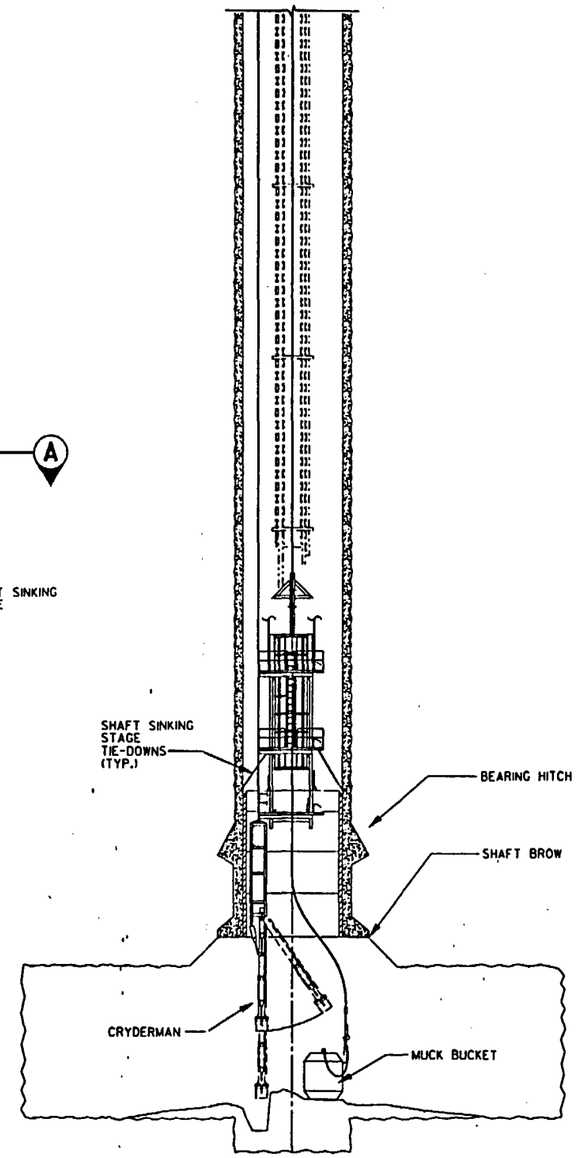


STATION BREAKOUT
SEQUENCE VIEW (14)

QUALITY LEVELS OF THE ITEMS OR ACTIVITIES ON THIS DRAWING SHALL BE FOUND IN THE ESF QUALITY ASSURANCE LEVEL ASSIGNMENT SHEETS. (QALAS)

## NOTES

1. FOR SHAFT BROW & BEARING HITCH REFER TO DWG. FS-GA-0102.

## REFERENCE DRAWINGS

| | |
|---|---|
| FS-GA-0054 | ES-1 SHAFT SINKING SEQUENCE SHEET 1 |
| FS-GA-0055 | ES-1 SHAFT SINKING SEQUENCE SHEET 2 |
| FS-GA-0059 | ES-1 SHAFT TEST ARRANGEMENTS - SHEET 2 |
| FS-GA-0062 | ES-1 SHAFT LINER SECTION & DETAILS |
| FS-GA-0063 | ES-1 SHAFT - CONCRETE FORM SECTION, PLANS & DETAIL |
| FS-GA-0072 | ES-1 SHAFT SINKING STAGE ELEVATIONS & SECTIONS |
| FS-GA-0102 | ES-2 SHAFT LINER SECTIONS & DETAILS |

SI APERTURE CARD

Also Available On Aperture Card

890 1040172-53

| ITEM | REQD | MATERIAL | DESCRIPTION | DWG. NO. |
|---|---|---|---|---|

**U.S. DEPARTMENT OF ENERGY**
NEVADA OPERATIONS OFFICE — LAS VEGAS, NEVADA

| APPROVALS | | DATE |
|---|---|---|
| DESIGN | [illegible] | 12-8-88 |
| DRAWN | J.O.E | 9-27-88 |
| CHECKED | J.A.H | 12-8-88 |
| PROJ. ENG. MGR. | B.CH. | 12-8-88 |
| Q.A.R. | [illegible] | 12-8-88 |
| PROJ. MGR. | [illegible] | 12-8-88 |
| ACCEPTED YMPO | [illegible] | 12-15-88 |

**FENIX & SCISSON, INC.**
LAS VEGAS, NEVADA

YUCCA MOUNTAIN PROJECT
EXPLORATORY SHAFT FACILITY
ES-1 SHAFT SINKING SEQUENCE
**SHEET 3**

| W.B.S. NO. | DRAWING NO. | REV. |
|---|---|---|
| 1.2.6.4.1 | FS-GA-0056 | C |
| SCALE 1/8"=1'-0" | DATE | SHEET 1 OF 1 |

1/8" = 1'-0" 0 5 10 15 20 25 FT.

| NO. | DATE | REVISION | DES. | DRN. | CHK. | P.D.M. | O.A.R. | P.M. | YMPO |
|---|---|---|---|---|---|---|---|---|---|

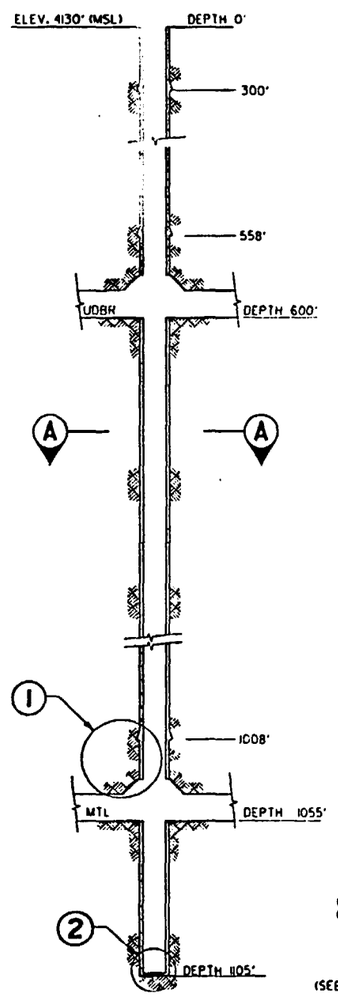


ES-I PROFILE
SCALE: NONE

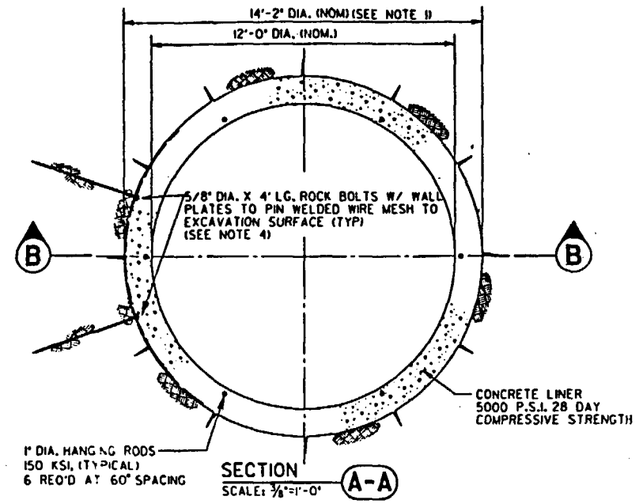


SECTION A-A
SCALE: 3/8"=1'-0"

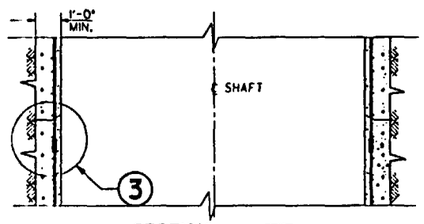


SECTION B-B
SCALE: 3/8"=1'-0"

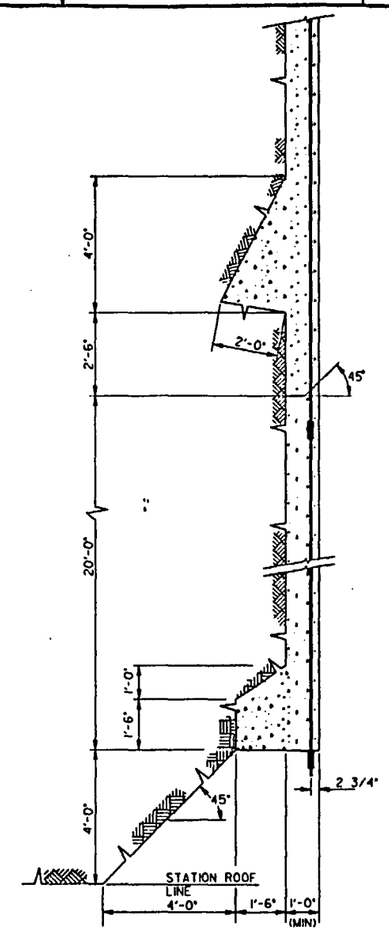


TYPICAL LINER FOUNDATION KEY AND STATION BROW ARRANGEMENT
DETAIL 1
SCALE: 1/2"=1'-0"

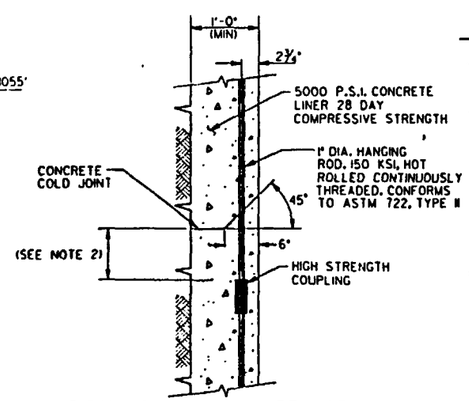


TYPICAL "COLD JOINT" ARRANGEMENT
DETAIL 3
SCALE: 1"=1'-0"

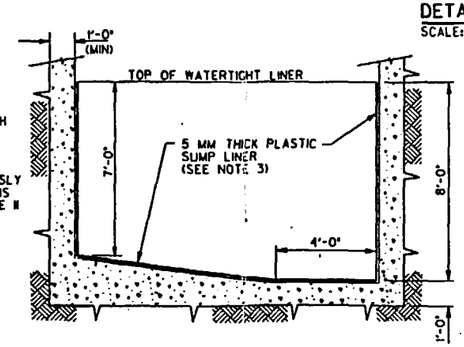


GENERAL ARRANGEMENT OF WATERTIGHT LINER IN SHAFT SUMP
DETAIL 2
SCALE: 3/8"=1'-0"

1" = 1'-0" 0 1 2 3 FT.
1/2" = 1'-0" 0 1 2 3 4 5 6 FT.
3/8" = 1'-0" 0 1 2 3 4 5 6 7 8 FT.

QUALITY LEVELS OF THE ITEMS OR ACTIVITIES ON THIS DRAWING SHALL BE FOUND IN THE ESF QUALITY ASSURANCE LEVEL ASSIGNMENT SHEETS. (QALAS)

## NOTES

1. EXCAVATION MUST ALLOW 12" MINIMUM CONCRETE THICKNESS.
2. TO BE DETERMINED PENDING FINAL DESIGN OF CURB RING/BLAST RING.
3. 5 MM THICK "BEKAPLAST" OR EQUIVALENT W/ THERMAL-WELDED CONCRETE ANCHORS.
4. ROCK BOLTS SET AT 5 FT. HORIZONTAL AND VERTICAL SPACING.
5. ROCK BOLTS TO HAVE EXPANSION SHELL ANCHOR.

## REFERENCE DRAWINGS

| | |
|---|---|
| FS-GA-0050 | ES-I SHAFT - GENERAL ARRANGEMENT CROSS SECTIONS |
| FS-GA-0063 | ES-I SHAFT - CONCRETE FORM SECTION, PLANS & DETAIL |
| FS-GA-0091 | ES-I SHAFT - MTL SHAFT STATION SECTIONS |
| FS-GA-0095 | ES-I SHAFT - TAIL SHAFT SECTIONS |

SI APERTURE CARD

Also Available On Aperture Card

8901040172-54

| ITEM | REQD | MATERIAL | DESCRIPTION | DWG. NO. |
|---|---|---|---|---|

**U.S. DEPARTMENT OF ENERGY**
NEVADA OPERATIONS OFFICE — LAS VEGAS, NEVADA

| APPROVALS | | DATE |
|---|---|---|
| DESIGN | A.J. | 12/13/86 |
| DRAWN | D.B. | 12-3-86 |
| CHECKED | J.A.H. | 12-8-86 |
| PROJ. DES. MGR. | B.C.M. | 12-8-86 |
| O.A.R. | PBH | 12-9-86 |
| PROJ. MGR. | TKT | 12-9-86 |
| ACCEPTED TPO | [illegible] | 12-15-86 |

**FENIX & SCISSON, INC.**
LAS VEGAS, NEVADA

YUCCA MOUNTAIN PROJECT
EXPLORATORY SHAFT FACILITY
ES-I SHAFT LINER
**SECTIONS & DETAILS**

| W.B.S. NO. | DRAWING NO. | REV. |
|---|---|---|
| 1.2.6.4.1 | FS-GA-0062 | C |

| SCALE | DATE | |
|---|---|---|
| NOTED | | SHEET 1 OF 1 |

| NO. | DATE | REVISION | DES. | DRN. | CHK. | P.D.M. | O.A.R. | P.M. | YMPO |
|---|---|---|---|---|---|---|---|---|---|

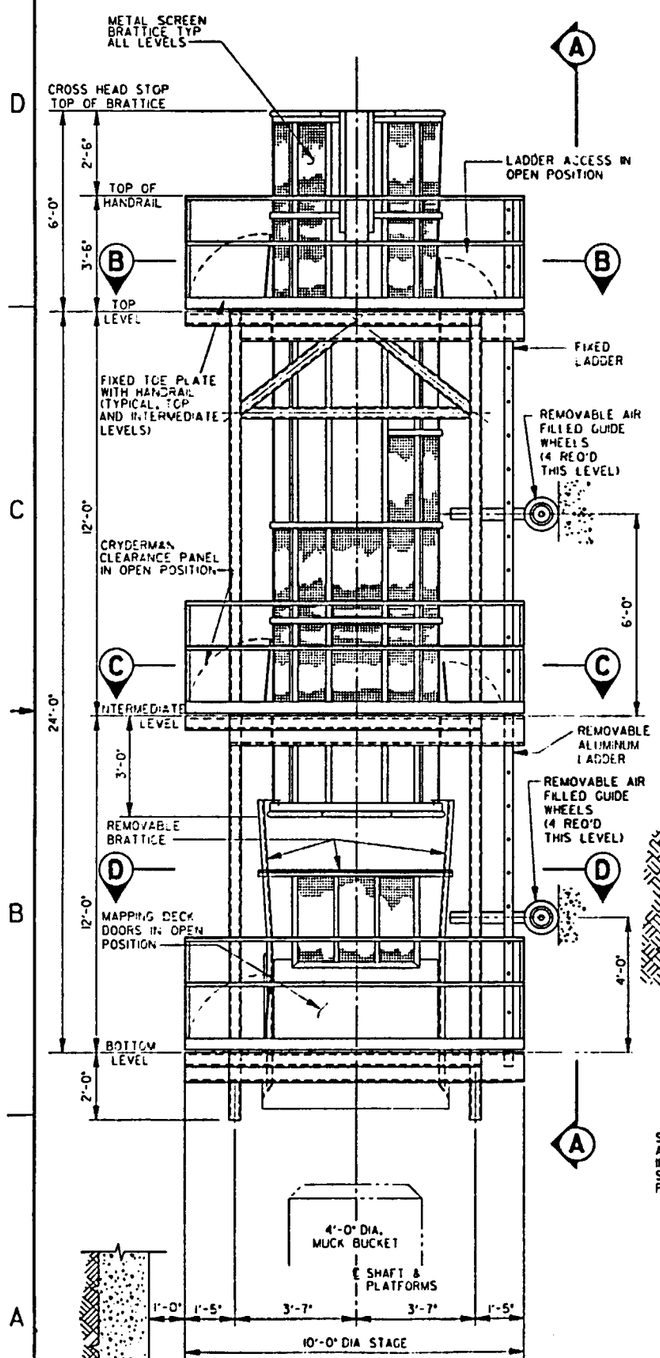


SHAFT SINKING STAGE ELEVATION

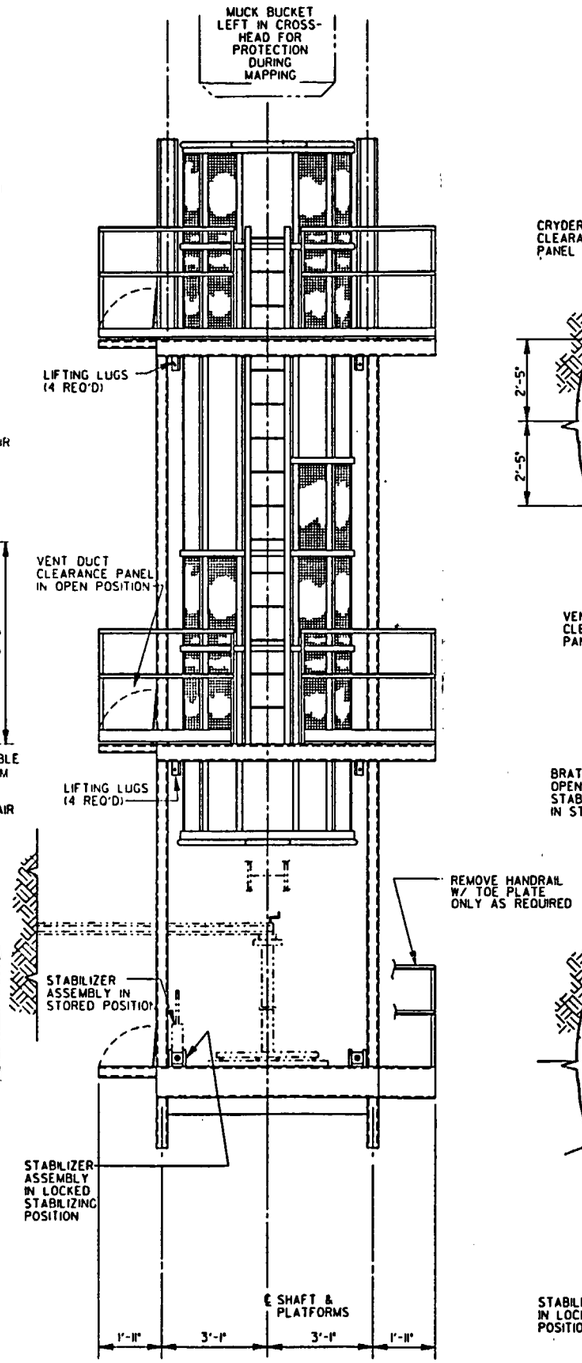


ELEVATION (A)

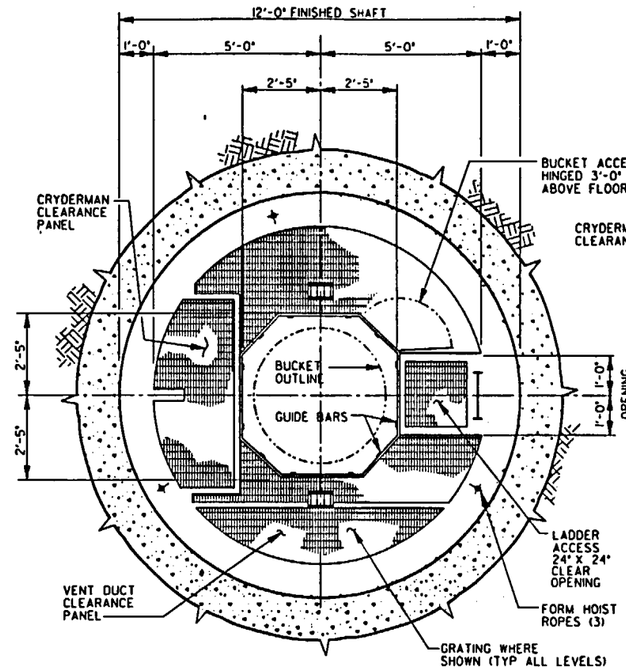


SECTION (B-B)

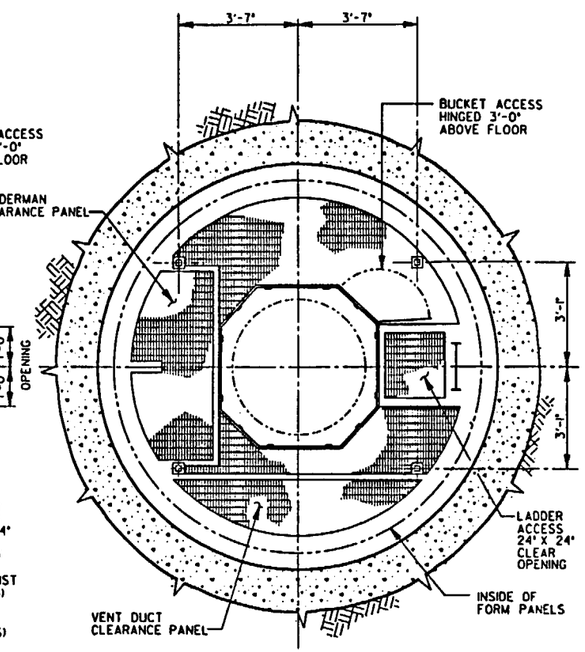


SECTION (C-C)

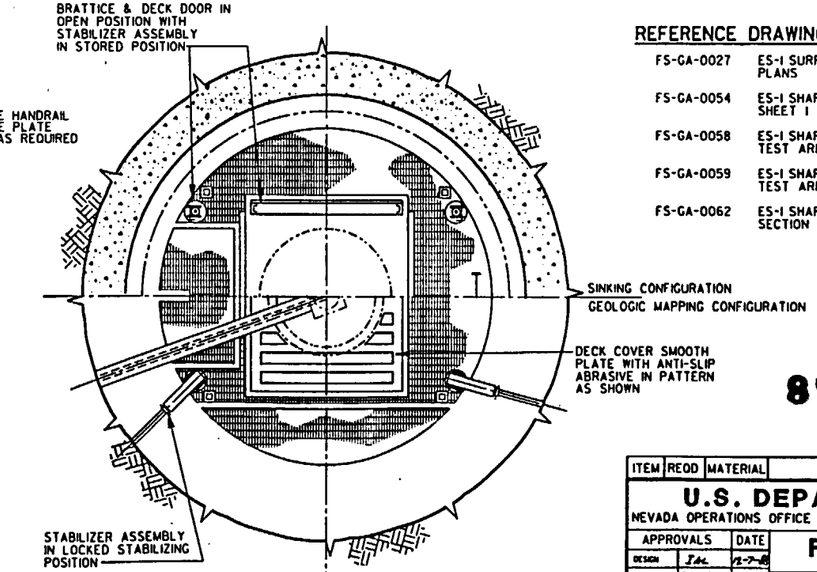


SECTION (D-D)

## REFERENCE DRAWINGS

| | |
|---|---|
| FS-GA-0027 | ES-1 SURFACE, SHAFT COLLAR - SINKING PLANS |
| FS-GA-0054 | ES-1 SHAFT SINKING SEQUENCE SHEET 1 |
| FS-GA-0058 | ES-1 SHAFT TEST ARRANGEMENTS - SHEET 1 |
| FS-GA-0059 | ES-1 SHAFT TEST ARRANGEMENTS - SHEET2 |
| FS-GA-0062 | ES-1 SHAFT LINER SECTION & DETAILS |

SI APERTURE CARD

Also Available On Aperture Card

8901040172-55

½" = 1'-0" 0 1 2 3 4 5 6 FT.

QUALITY LEVELS OF THE ITEMS OR ACTIVITIES ON THIS DRAWING SHALL BE FOUND IN THE ESF QUALITY ASSURANCE LEVEL ASSIGNMENT SHEETS. (QALAS)

| ITEM | REQD | MATERIAL | DESCRIPTION | DWG. NO. |
|---|---|---|---|---|

**U.S. DEPARTMENT OF ENERGY**
NEVADA OPERATIONS OFFICE — LAS VEGAS, NEVADA

| APPROVALS | | DATE |
|---|---|---|
| DESIGN | J.A.L. | 12-7-88 |
| DRAWN | D.W.C | 9-2-88 |
| CHECKED | J.A.L. | 12-8-88 |
| PROJ. DES. MGR. | B.C.W. | 12-8-88 |
| Q.A.R. | PGN | 12-8-88 |
| PROJ. MGR. | TTT | 12-8-88 |
| ACCEPTED YMPO | | |

**FENIX & SCISSON, INC.**
LAS VEGAS, NEVADA

YUCCA MOUNTAIN PROJECT
EXPLORATORY SHAFT FACILITY
ES-1 SHAFT SINKING STAGE
**ELEVATIONS & SECTIONS**

| W.B.S. NO. | DRAWING NO. | REV. |
|---|---|---|
| 1.2.6.4.1 | FS-GA-0072 | C |
| SCALE 1/2"=1'-0" | DATE | SHEET 1 OF 1 |

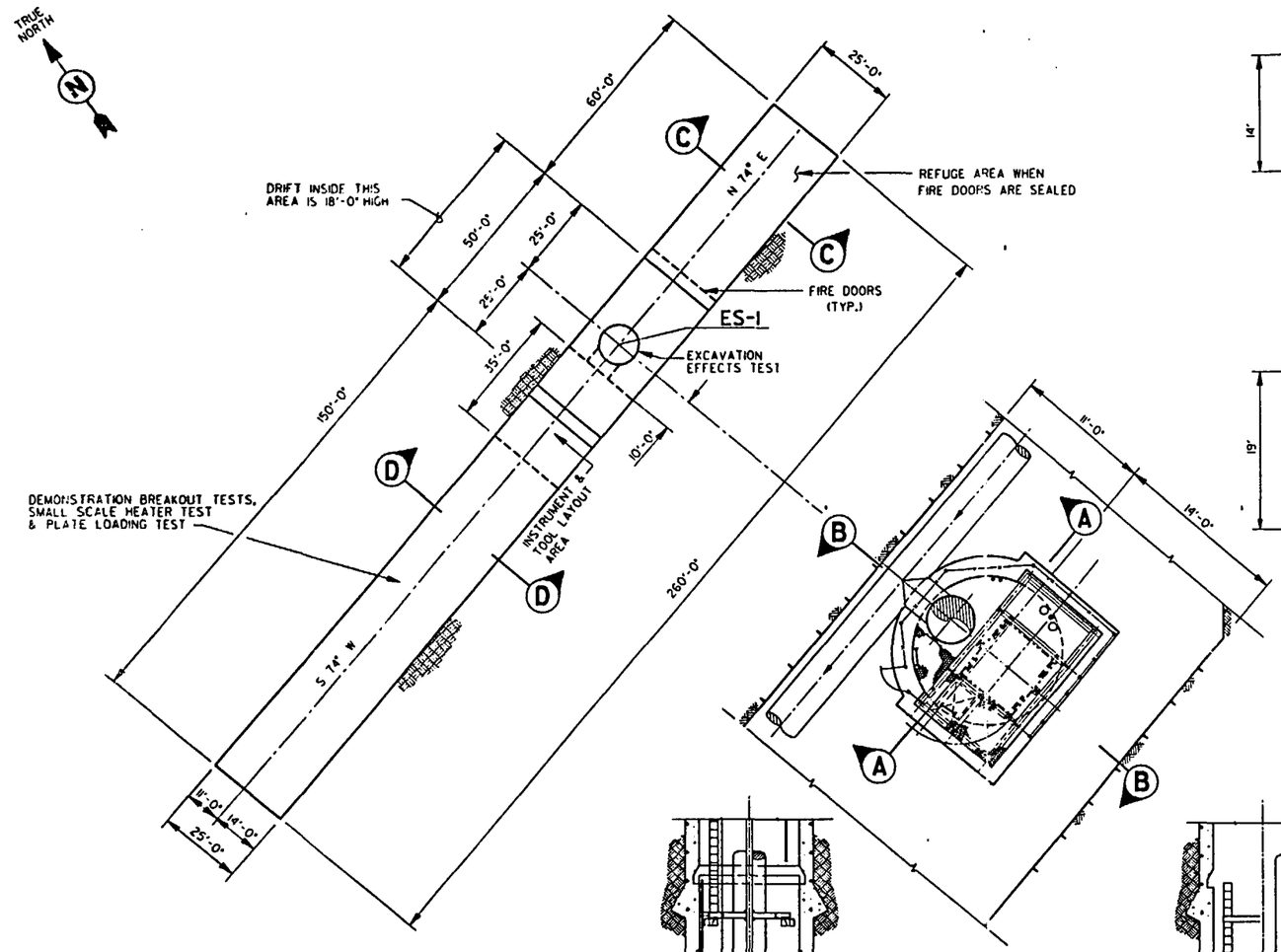


PLAN
UPPER DEMONSTRATION BREAKOUT ROOM
ELEVATION = 3530'
SCALE: 1"=20'

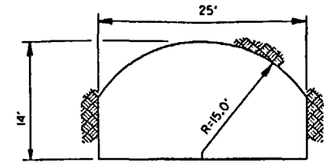


SECTION D-D
SCALE: 1/8"=1'-0"

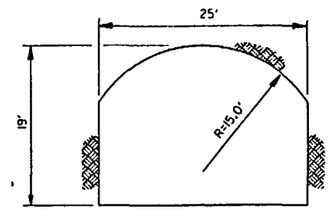


SECTION D-D
SCALE: 1/8"=1'-0"

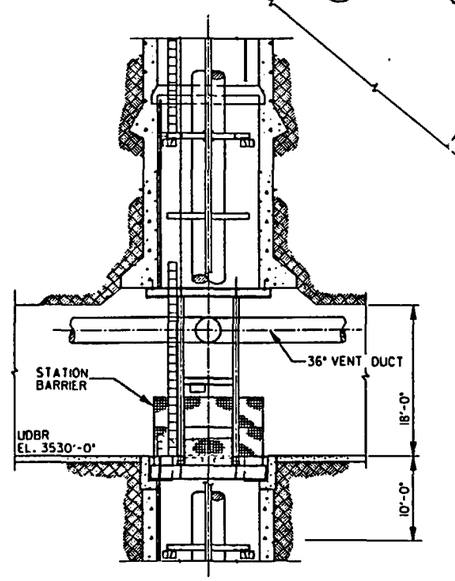


SECTION A-A
SCALE: NONE

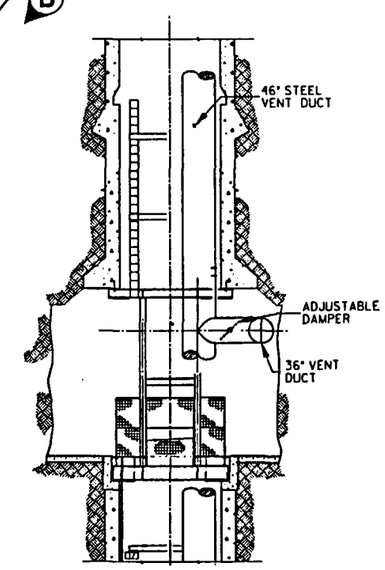


SECTION B-B
SCALE: NONE

1" = 20' 0 20 40 60 FT.
1/8" = 1'-0" 0 5 10 15 20 25 FT.

QUALITY LEVELS OF THE ITEMS OR ACTIVITIES ON THIS DRAWING SHALL BE FOUND IN THE ESF QUALITY ASSURANCE LEVEL ASSIGNMENT SHEETS. (QALAS)

| NO. | DATE | REVISION | DES. | DRN. | CHK. | P.D.M. | Q.A.R. | P.M. | YMPO |
|---|---|---|---|---|---|---|---|---|---|

NOTE
1. ALL DRIFTS ARE 14'-0" HIGH UNLESS OTHERWISE NOTED.

REFERENCE DRAWINGS

| | |
|---|---|
| FS-GA-0085 | ES-1 SHAFT, UDBR SHAFT STATION SECTIONS |
| FS-GA-0180 | SUBSURFACE MISCELLANEOUS TYPICAL DETAILS |

SI APERTURE CARD

Also Available On Aperture Card

8901040172-56

| ITEM | REQD | MATERIAL | DESCRIPTION | DWG. NO. |
|---|---|---|---|---|

U.S. DEPARTMENT OF ENERGY
NEVADA OPERATIONS OFFICE — LAS VEGAS, NEVADA

| APPROVALS | | DATE |
|---|---|---|
| DESIGN | [illegible] | [illegible] |
| DRAWN | J.B. | [illegible] |
| CHECKED | JAH | 12-8-88 |
| PROJ. DES. MGR. | B.CH. | 12-8-88 |
| Q.A.R. | A. ALI | 12-8-88 |
| PROJ. MGR. | [illegible] | 12-8-88 |
| ACCEPTED YMPO | [illegible] | 12-15-88 |

FENIX & SCISSON, INC.
LAS VEGAS, NEVADA

YUCCA MOUNTAIN PROJECT
EXPLORATORY SHAFT FACILITY
ES-1 UDBR LEVEL
PLAN

| W.B.S. NO. | DRAWING NO. | REV. |
|---|---|---|
| 1.2.6.6.0 | FS-GA-0150 | C |

| SCALE | DATE | SHEET |
|---|---|---|
| NOTED | | 1 OF 1 |

| NO. | DATE | REVISION | DES. | DRN. | CHK. | P.D.M. | O.A.R. | P.M. | YMPO |
|---|---|---|---|---|---|---|---|---|---|

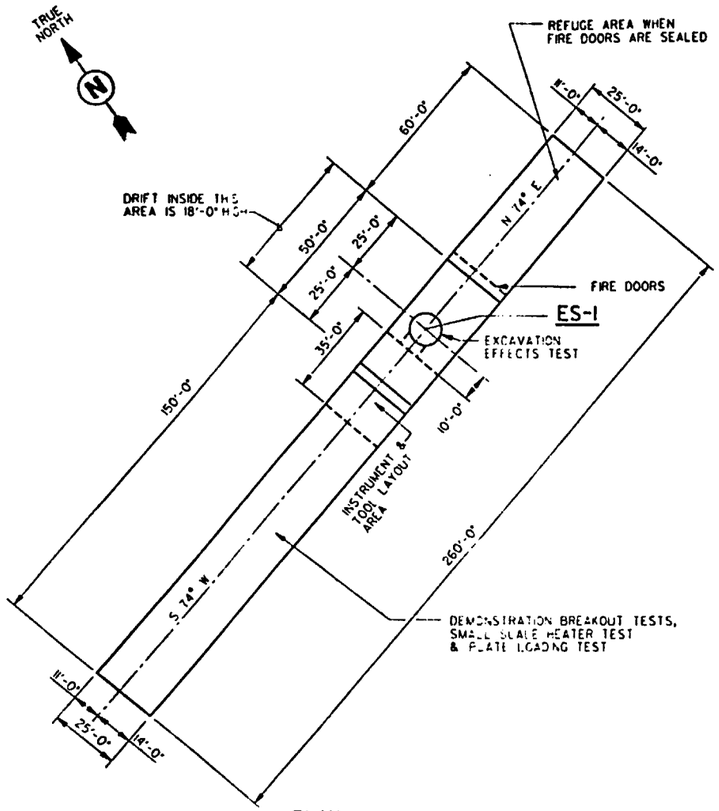


PLAN

UPPER DEMONSTRATION BREAKOUT ROOM

ELEVATION = 3530'
SCALE: 1"=25'

1" = 25' 0 25 50 75 FT.

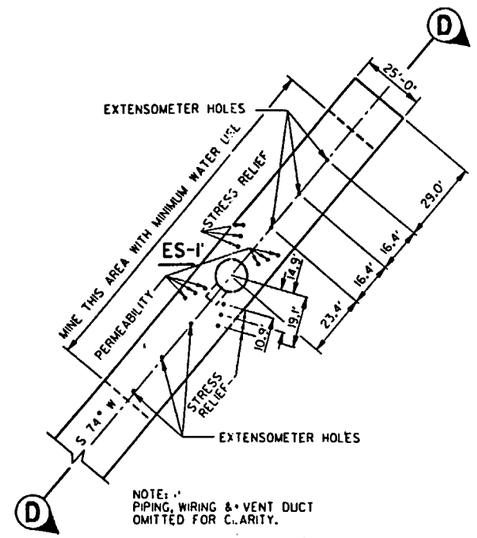


PLAN - UDBR

SCALE: 1"=25'

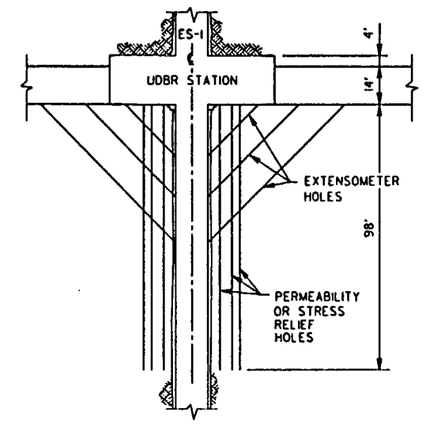


SECTION D-D

SCALE: 1"=25'

EXCAVATION EFFECTS TEST

REFERENCE SDRD, NVO-309, REV. 1 APPX.B

1" = 25' 0 25 50 75 FT.

## NOTES

1. FOR MASTER LEGEND OF GRAPHIC SYMBOLS, SEE DRAWINGS FS-GA-0003 & FS-GA-0004
2. FOR ABBREVIATIONS AND ACRONYMS, SEE DRAWING FS-GA-0005
3. SOME SYMBOLS ARE REPEATED ON THIS DRAWING FOR EASE OF IDENTIFICATION.

SI APERTURE CARD

Also Available On Aperture Card

8901040172-57

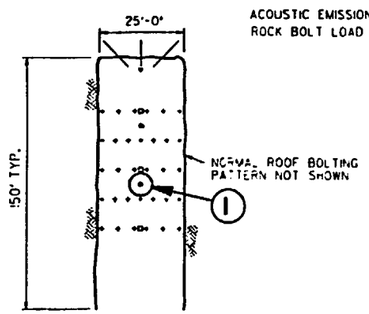


PLAN VIEW

PLATE LOADING TEST LOCATIONS IN DEMONSTRATION BREAKOUT ROOM
SCALE : NONE

LEGEND:
- ● PLATE LOADING TEST LOCATION
- □ DRIFT CONVERGENCE ANCHOR
- ⊙ MPBX
- + ROCK BOLT LOAD CELL
- ⊥ ACOUSTIC EMISSION SENSOR

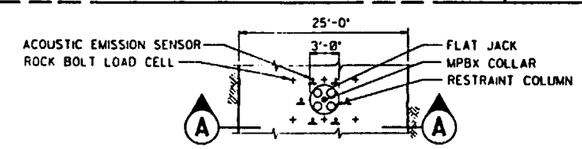


PLAN VIEW

DETAIL I

SCALE : NONE

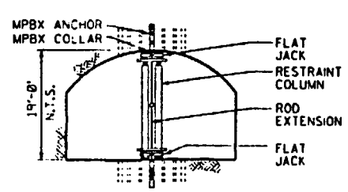


SECTION A-A

SCALE : NONE

LAYOUT, PLATE LOADING TEST

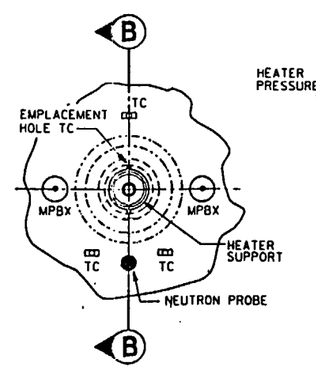


PLAN

SCALE : NONE

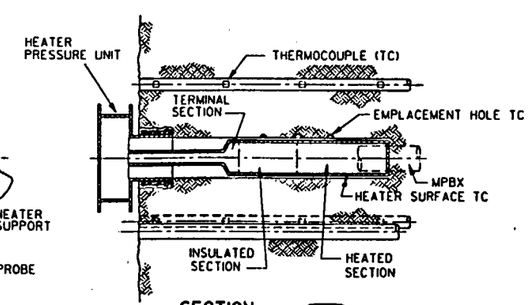


SECTION B-B

SCALE : NONE

SMALL SCALE HEATER TEST 2.6.9.2.3.7.

SCALE : NONE

QUALITY LEVELS OF THE ITEMS OR ACTIVITIES ON THIS DRAWING SHALL BE FOUND IN THE ESF QUALITY ASSURANCE LEVEL ASSIGNMENT SHEETS. (QALAS)

| ITEM | REQD | MATERIAL | DESCRIPTION | DWG. NO. |
|---|---|---|---|---|

**U.S. DEPARTMENT OF ENERGY**
NEVADA OPERATIONS OFFICE — LAS VEGAS, NEVADA

| APPROVALS | | DATE |
|---|---|---|
| DESIGN | | |
| DRAWN | H.D.G | |
| CHECKED | J.A.H | |
| PROJ. DES. MGR. | B.C.H. | |
| Q.A.R. | | |
| PROJ. MGR. | | |
| ACCEPTED YMPO | | |

**FENIX & SCISSON, INC.**
LAS VEGAS, NEVADA

YUCCA MOUNTAIN PROJECT
EXPLORATORY SHAFT FACILITY
ES-1 UDBR
**TEST AREAS**

| W.B.S. NO. | DRAWING NO. | REV. |
|---|---|---|
| 1.2.6.6.0 | FS-GA-0151 | C |

| SCALE | DATE | SHEET |
|---|---|---|
| NOTED | | 1 OF 1 |

| NO. | DATE | REVISION | DES. | DRN. | CHK. | P.D.M. | O.A.R. | P.M. | YMPO |
|---|---|---|---|---|---|---|---|---|---|

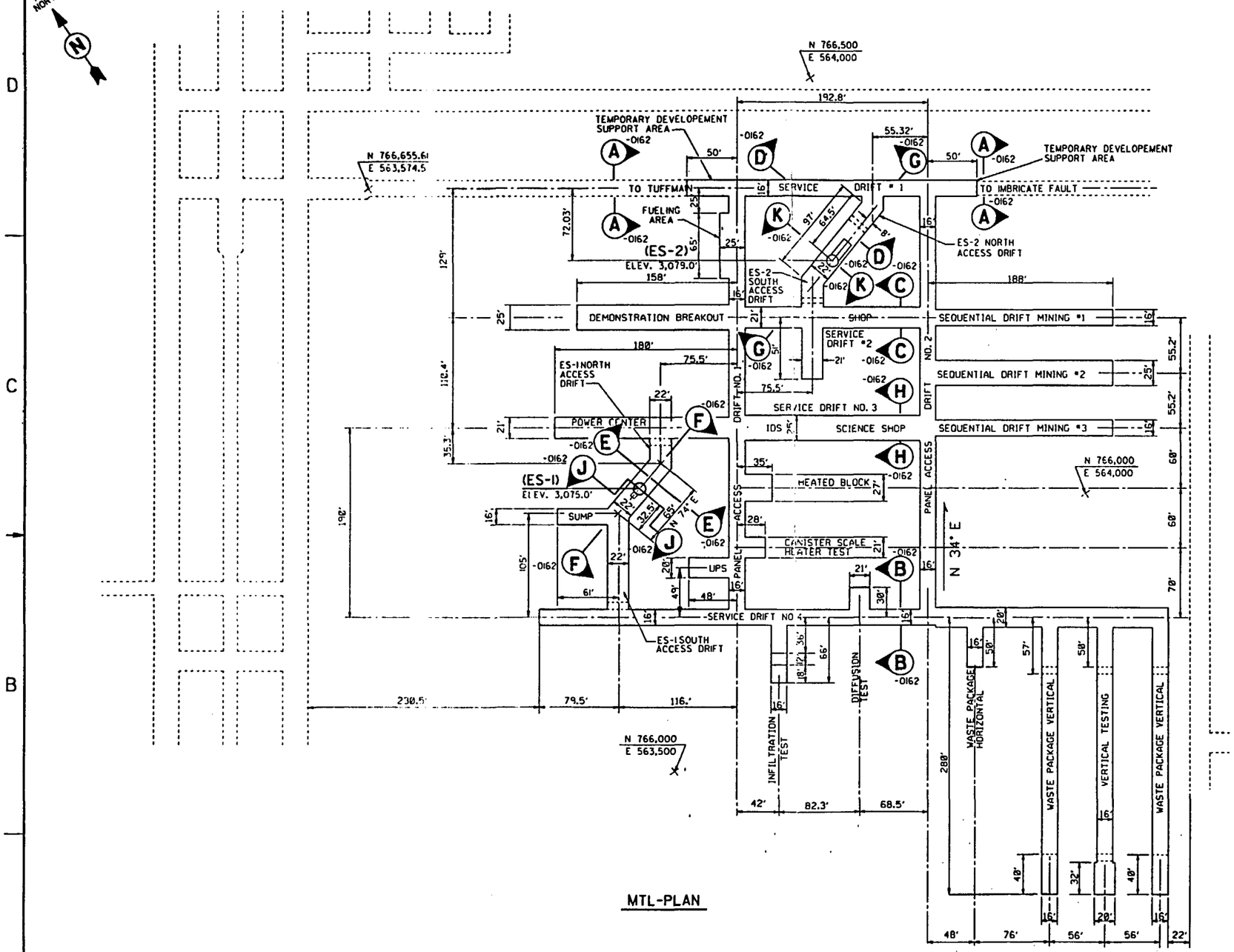


MTL-PLAN

1" = 50' 0 50 100 150 FT.

QUALITY LEVELS OF THE ITEMS OR ACTIVITIES ON THIS DRAWING SHALL BE FOUND IN THE ESF QUALITY ASSURANCE LEVEL ASSIGNMENT SHEETS. (QALAS)

## REFERENCE DRAWINGS

| | |
|---|---|
| FS-GA-0091 | ES-1 SHAFT, MTL SHAFT STATION SECTIONS |
| FS-GA-0110 | ES-2 SHAFT, MTL STATION SECTIONS |
| FS-GA-0162 | MAIN TEST LEVEL SECTIONS AND DETAIL |

SI APERTURE CARD

Also Available On Aperture Card

8901040172-58

| ITEM | REQD | MATERIAL | DESCRIPTION | DWG. NO. |
|---|---|---|---|---|

**U.S. DEPARTMENT OF ENERGY**
NEVADA OPERATIONS OFFICE — LAS VEGAS, NEVADA

| APPROVALS | | DATE |
|---|---|---|
| DESIGN | [signature] | [illegible] |
| DRAWN | L.B.D | [illegible] |
| CHECKED | JAH | 12-8-88 |
| PROJ. DES. MGR. | B.CH. | 12-8-88 |
| Q.A.R. | A.ALI | 12-8-88 |
| PROJ. MGR. | [illegible] | 12-8-88 |
| ACCEPTED YMPO | [signature] | 12-13-88 |

**FENIX & SCISSON, INC.**
LAS VEGAS, NEVADA

YUCCA MOUNTAIN PROJECT
EXPLORATORY SHAFT FACILITY
MTL PLAN - DIMENSIONAL
**GENERAL ARRANGEMENT**

| W.B.S. NO. | DRAWING NO. | REV. |
|---|---|---|
| 1.2.6.6.0 | FS-GA-0160 | C |
| SCALE 1"=50' | DATE | SHEET 1 OF 1 |

| NO. | DATE | REVISION | DES. | DRN. | CHK. | P.D.M. | O.A.R. | P.M. | YMPO |
|---|---|---|---|---|---|---|---|---|---|

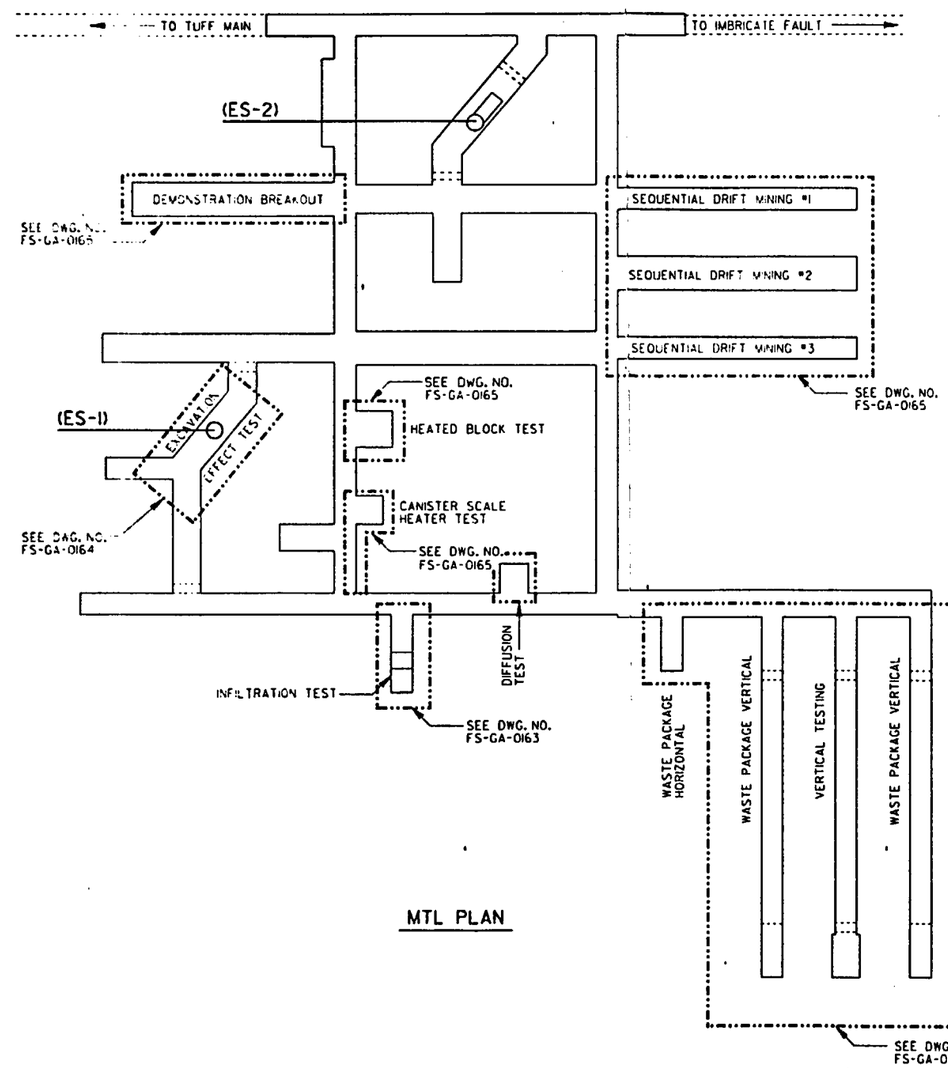


MTL PLAN

1" = 50'  0 50 100 150 FT.

QUALITY LEVELS OF THE ITEMS OR ACTIVITIES ON THIS DRAWING SHALL BE FOUND IN THE ESF QUALITY ASSURANCE LEVEL ASSIGNMENT SHEETS. (QALAS)

## NOTES

1. FOR DIMENSIONS OF MTL PLAN, SEE DRAWING FS-GA-0160

SI APERTURE CARD

Also Available On Aperture Card

## REFERENCE DRAWINGS

| | |
|---|---|
| FS-GA-0160 | MTL PLAN - DIMENSIONAL GENERAL ARRANGEMENT |
| FS-GA-0162 | MAIN TEST LEVEL SECTIONS & DETAILS |
| FS-GA-0163 | MAIN TEST LEVEL - TEST ALCOVES DETAILS - SHEET 1 |
| FS-GA-0164 | MAIN TEST LEVEL - TEST ALCOVES DETAILS - SHEET 2 |
| FS-GA-0165 | MAIN TEST LEVEL - TEST ALCOVES DETAILS - SHEET 3 |
| FS-GA-0166 | MAIN TEST LEVEL - TEST ALCOVES DETAILS - SHEET 4 |
| FS-GA-0194 | EXPLORATORY DRIFTS GENERAL ARRANGEMENT |
| FS-GA-0195 | IMBRICATE FAULT EXPLORATORY DRIFTS PLAN & SECTIONS - SHEET 1 |
| FS-GA-0196 | IMBRICATE FAULT EXPLORATORY DRIFT PLAN & SECTIONS - SHEET 2 |
| FS-GA-0197 | GHOST DANCE FAULT EXPLORATORY DRIFT PLAN & SECTIONS - SHEET 1 |
| FS-GA-0198 | GHOST DANCE FAULT EXPLORATORY DRIFT PLAN & SECTION - SHEET 2 |
| FS-GA-0199 | DRILL HOLE WASH FAULT EXPLORATORY DRIFT PLANS & SECTIONS |

8901040172-59

| ITEM | REQD | MATERIAL | DESCRIPTION | DWG. NO. |
|---|---|---|---|---|

**U.S. DEPARTMENT OF ENERGY**
NEVADA OPERATIONS OFFICE — LAS VEGAS, NEVADA

| APPROVALS | | DATE |
|---|---|---|
| DESIGN | [illegible] | [illegible] |
| DRAWN | L.B.D | [illegible] |
| CHECKED | [illegible] | [illegible] |
| PROJ. DES. MGR. | B.CVL | [illegible] |
| Q.A.R. | A.ALI | [illegible] |
| PROJ. MGR. | [illegible] | [illegible] |
| ACCEPTED YMPO | [illegible] | [illegible] |

**FENIX & SCISSON, INC.**
LAS VEGAS, NEVADA

YUCCA MOUNTAIN PROJECT
EXPLORATORY SHAFT FACILITY
MTL PLAN - TEST AREAS
**GENERAL ARRANGEMENT**

| W.B.S. NO. | DRAWING NO. | REV. |
|---|---|---|
| 1.2.6.6.0 | FS-GA-0161 | C |
| SCALE 1"=50' | DATE | SHEET 1 OF 1 |

| NO. | DATE | REVISION | DES. | DRN. | CHK. | P.D.M. | O.A.R. | P.M. | YMPO |
|---|---|---|---|---|---|---|---|---|---|

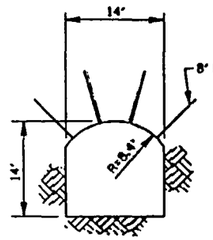


SECTION A-A
SCALE: 1"=10'
-0160

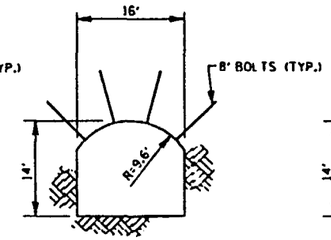


SECTION B-B
SCALE: 1"=10'
-0160

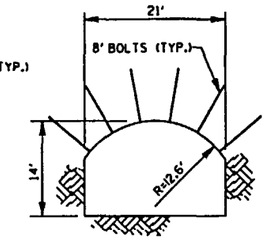


SECTION C-C
SCALE: 1"=10'
-0160

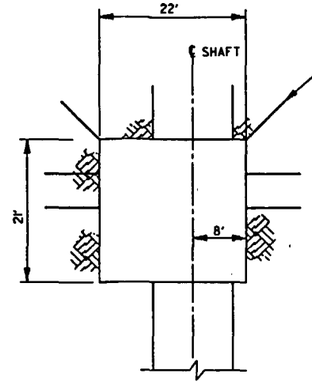


SECTION D-D
SCALE: 1"=10'
ES-2
-0160

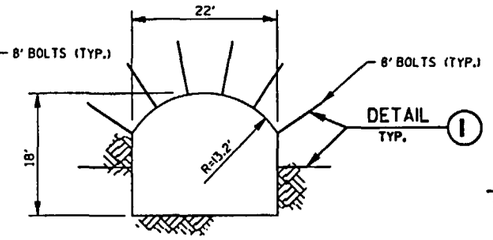


SECTION E-E
SCALE: 1"=10'
ES-1 ONLY
-0160

NOTE

1. ALL DIMENSIONS SHOWN ARE FINISHED DIMENSIONS.

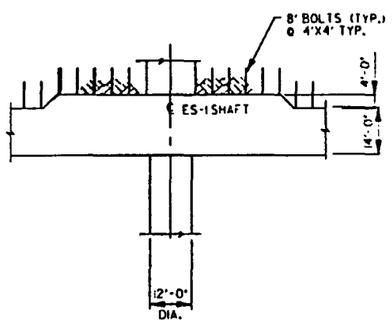


SECTION F-F
SCALE: 1"=20'
-0160

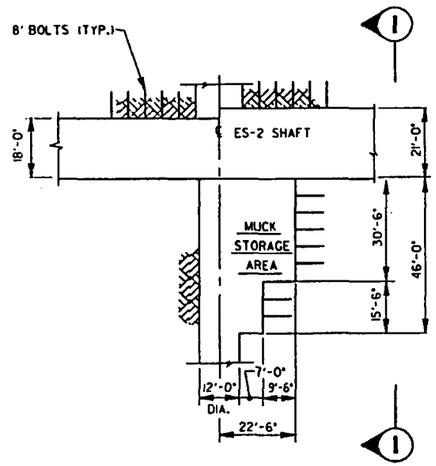


SECTION G-G
SCALE: 1"=20'
-0160

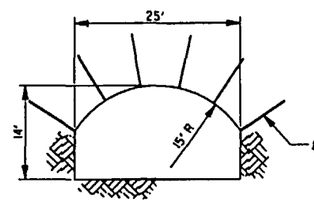


SECTION H-H
SCALE: 1"=10'
-0160

REFERENCE DRAWING

FS-GA-0160 MTL PLAN - DIMENSIONAL GENERAL ARRANGEMENT

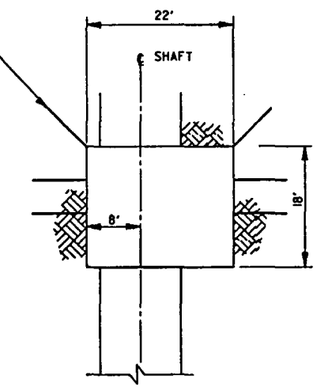


SECTION K-K
SCALE: 1"=10'
ES-2
-0160

SI APERTURE CARD

Also Available On Aperture Card

8901040172-60

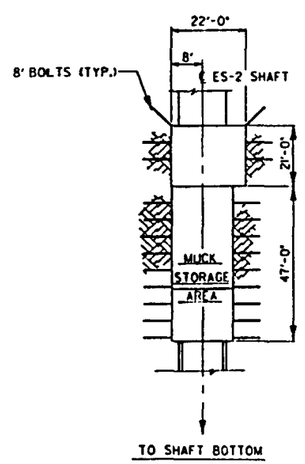


SECTION I-I
SCALE: 1"=20'

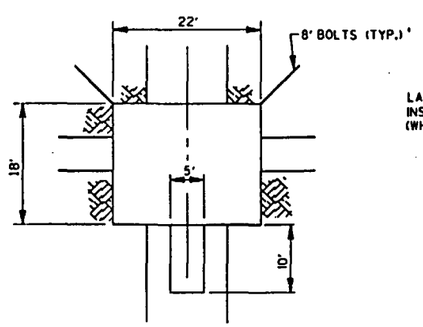


SECTION J-J
SCALE: 1"=10'
ES-1
-0160

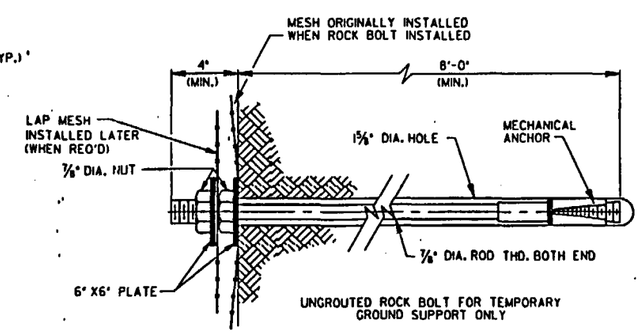


DETAIL I
SCALE: 3"=1'-0"

3" = 1'-0" 0 1/4 1/2 1 FT.
1" = 20' 0 20 40 60 FT.
1" = 10' 0 10 20 30 FT.

QUALITY LEVELS OF THE ITEMS OR ACTIVITIES ON THIS DRAWING SHALL BE FOUND IN THE ESF QUALITY ASSURANCE LEVEL ASSIGNMENT SHEETS. (QALAS)

| ITEM | REQD | MATERIAL | DESCRIPTION | DWG. NO. |
|---|---|---|---|---|

**U.S. DEPARTMENT OF ENERGY**
NEVADA OPERATIONS OFFICE — LAS VEGAS, NEVADA

| APPROVALS | | DATE |
|---|---|---|
| DESIGN | [illegible] | 12-8-88 |
| DRAWN | L.B.D | 12-7-88 |
| CHECKED | JAH | 12-8-88 |
| PROJ. DES. MGR. | B.C.M. | 12-8-88 |
| Q.A.R. | A. ALI | 12-8-88 |
| PROJ. MGR. | [illegible] | 12-11-88 |
| ACCEPTED YMPO | [illegible] | 12-13-88 |

**FENIX & SCISSON, INC.**
LAS VEGAS, NEVADA

YUCCA MOUNTAIN PROJECT
EXPLORATORY SHAFT FACILITY
MAIN TEST LEVEL
**SECTIONS & DETAILS**

| W.B.S. NO. | DRAWING NO. | REV. |
|---|---|---|
| 1.2.6.6.0 | FS-GA-0162 | C |
| SCALE: NOTED | DATE | SHEET 1 OF 1 |