HOLTEC INTERNATIONAL

HI-STORM 100 SYSTEM
CERTIFICATE OF COMPLIANCE 72-1014

LICENSE AMENDMENT REQUEST 1014-2

REVISION 2

AUGUST, 2003

Holtec Response to Request For Additional Information
Holtec International HI-STORM 100 Amendment Request, TAC L23564
License Amendment Request 1014-2, Revision 1, Docket 72-1014

General

Question G-1

Revise the Final Safety Analysis Report (FSAR) to remove references to the Certificate of Compliance (CoC) for discussions and analyses describing design features of the package and parameters of proposed contents.

The CoC is an NRC document. The CoC is based on information contained in the FSAR and therefore should not be used as the sole source for information on which the staff must make a finding.

This information is necessary in accordance with 10 CFR 72.11 and 72.236.

Response G-1

References to the CoC from the FSAR are an artifact of the original licensing process. At that time (ca. 1999), the CoC did not exist until near the end of the licensing review of the HI-STORM 100 System. The original CoC format and content were drafted by Holtec and submitted to the NRC for adoption. The information in the CoC was able to be derived, either directly or indirectly from information in the FSAR. For this reason, the FSAR and CoC were not developed as stand-alone documents and the FSAR, as the RAI correctly points out, contains a number of references to the CoC for information. In response to this RAI, we have reviewed the entire FSAR document and removed all inappropriate references to the CoC. Further, the description of the authorized contents for the package in FSAR Section 2.1 has been enhanced and clarified to provide a clear link between the information in the FSAR and the CoC such that each document is autonomously complete.

Chapter 1 - General Description

None.

Chapter 2 – Principal Design Criteria

Question 2-1

Provide the following information regarding proposed Technical Specification (TS) 2.3.

(a) Clarify the difference between "equivalent level of safety" and "consistent with applicable requirements."

It is not clear if content deviations that significantly decrease safety margins with respect to design function criteria derived by the HI-STORM analyses (e.g., increase in reactivity values or increase in cladding temperatures) would be permitted under this approval mechanism.

(b) Clarify if alternative contents submitted to NRC for approval will be based on other design/methodology changes performed under 10 CFR 72.48.

(c) Clarify if the alternatives in proposed TS 2.3 refer to only the content specifications defined in Table 2.2-2, or those specifications defined in the entire Appendix.

For example, it is not clear if Holtec intends to use this provision to add new fuel assembly types, new burnup and cooling times, or new regionalized loading patterns.

This information is required to determine compliance with 10 CFR Part 72.11 and 72.236(a).

Response 2-1

a. The phrases "equivalent level of safety" and "consistent with applicable requirements" in proposed Technical Specification (TS) 2.3 are taken verbatim from NUREG-1745, which suggests that this type of flexibility in dry storage cask TS is appropriate. Since these are the NRC's words, we can only provide our interpretation of them. We interpret "equivalent level of safety" to mean no significant reduction in safety margins. Therefore, changes that create, for example, significant increases in reactivity or fuel cladding temperatures would not be proposed under this process. We interpret "consistent with applicable requirements" to mean compliance with all applicable regulations and commitments made in the current licensing basis (CoC and updated FSAR).

b. Requests for contents modifications would be based on the design/methodology in the updated FSAR, as modified under 10 CFR 72.48. We note that modifications to methods of analysis described in the FSAR without prior NRC approval are severely limited by §72.48(c)(2)(viii). Any change to methodology approved under 10 CFR 72.48 requires the results to be essentially the same or more conservative (i.e., closer to the limit) to avoid "creating margin" via method change. Any such methodology changes made under §72.48 that are used in a submittal under TS 2.3 will be clearly defined as part of the submittal package. Each of the parameters listed in Part (c) below would be treated as an input value and not a fundamental part of the methodology and any

proposed change would be evaluated using the methodology described in the FSAR at the time of the request, including any changes made under 10 CFR 72.48.

c. Consistent with our telephone conversation held on June 6, 2003, we have clarified the intended and scope of proposed new TS 2.3. Generally speaking, the intent of the proposed new TS is to request NRC approval via this process for only minor contents changes that meet all of the following criteria:

i. The proposed change does not significantly decrease any safety margins as described in the FSAR.

ii. The proposed change involves only a subset of the physical fuel assembly parameters listed in CoC Appendix B, Section 2, Tables 2.1-1, 2.1-2 and/or 2.1-3. This consists of the following parameters:

- Fuel assembly length
- Fuel assembly width
- Fuel assembly weight
- Fuel Rod Clad Outside Diameter (OD)
- Fuel Rod Clad Inside Diameter (ID)
- Fuel Pellet Diameter
- Fuel Rod Pitch
- PWR Guide/Instrument Tube Thickness
- BWR Water Rod Thickness
- BWR Channel Thickness

iii. There is a compelling client need whereby the normal certificate amendment process would not support their fuel loading schedule (i.e., TS 2.3 would help avoid having to use the §72.7 exemption process to maintain clients' fuel loading schedules).

The proposed change to TS 2.3 has been revised to accord with the above information.

Question 2-2

Provide information on the safety class of a damaged fuel container (DFC), design criteria utilized for the DFCs, design configuration including connections and American Society for Testing and Materials (ASTM) materials used, the structural evaluation for design loads, the fabrication requirements and the inspection acceptance requirements for this component.

Section 2.1.3 notes that the DFCs for the Multi-Purpose Canister (MPC) 32F that is proposed in Amendment 2 are stainless steel and are provided with 250 x 250 fine mesh screens. Figure 2.1.2D provides some related information on the DFCs in terms of general dimensions and design concept, however Table 2.2.6 that lists the Materials and Components of the HI-STORM 100 System does not address the DFC, its components or its safety class. This relates to the HI-STAR 100 (Docket 71-9261) Amendment 1 Request, RAI 1-2, dated February 25, 2003.

This information is necessary to comply with the requirements of 10 CFR Part 72, specifically 72.234, 72.236(b) and 72.236(c) relative to the application and approval of an amendment of a certificate of compliance in the subject area of the design criteria for the structures, systems and components important to safety.

Response 2-2

The Holtec-designed Damaged Fuel Containers (DFCs) and the previously-approved Transnuclear-designed DFCs for Dresden Unit 1 fuel are structural components that are required to maintain the damaged fuel and fuel debris in an analyzed configuration under normal and accident conditions of storage. Drawings of the Holtec DFCs were removed, with SFPO's consent, from the HI-STORM FSAR as part of Amendment 1. Instead, appropriate design information was added to the DFC figures in the FSAR (Figures 2.1.1 through 2.1.2C). FSAR Figure 2.1.2D was proposed to be added for the MPC-32 DFC in this amendment request, to be consistent with this licensing approach.

In response to this question, we have re-reviewed all DFC figures in the FSAR to ensure they include key design information, such as dimensions, materials of construction, and design codes. Figures 2.1.1 and 2.1.2D were updated accordingly. Furthermore, we should note that the DFC's characteristics currently listed in Revision 1 of the HI-STORM FSAR, Table 2.2.6, include information such as the safety class, applicable design code, and materials. The codes applicable to the material, design, fabrication, and inspection of the DFCs are also listed in FSAR Table 2.2.7. For clarity, Table 2.2.6 has been enhanced to clarify the material specification and the applicability of ASME Section III, Subsection NG. We have also created new FSAR Section 3.4.4.3.1.9 to include a summary of the DFC structural analyses and results. [The details of these structural analyses can be found in Holtec Report HI-2012787, Revision 4, Supplements 24 and 25. Revision 3 of this report was previously submitted to the NRC on this docket on November 3, 2002. Revision 4 of this report was submitted to the NRC on Docket 71-9261 on May 29, 2003.]

Question 2-3

Provide the thermal parameters for the Design Basis Spent Nuclear Fuel or suitable FSAR reference for this information.

Section 2.1.6 of the FSAR refers to Table 2.1.5 and Section 5.2 for description and methodology to determine the decay heat design basis fuel. Table 2.1.5 does not provide any information on maximum decay heat, burnup, enrichment, and cooling time for the design basis fuel. Section 5.2 only provides information on design-basis fuel for shielding analyses.

This information is needed to assure compliance with 10 CFR 72.11 and 72.236.

Response 2-3

For the thermal analysis, the design basis fuel assembly is one that would result in the highest computed peak cladding temperature (PCT) for a given heat load. The principal assembly-dependent variables used in the thermal analysis are fuel assembly effective planar thermal conductivity, fuel basket effective axial thermal conductivity, MPC density and heat capacity, and fuel basket axial resistance to helium flow. As would be expected, each fuel assembly type is different with respect to the above-mentioned thermal performance variables. In order to assure that the computed PCT will bound that for any specific fuel assembly type, the design basis assembly is defined by thermal variables that are a composite of several assembly types, so that all of the thermal resistances are the maximum from the set of fuel assembly types permitted to be stored in the HI-STORM 100 System.

Stated differently, there is no single fuel assembly design that is used in all thermal calculations as bounding of all others. Instead, each step in the thermal calculation utilizes the fuel assembly design that results in the most conservative result. The bounding fuel assembly designs for each thermal calculation performed are as follows:

Table 2-3.1
Thermal Analysis Bounding Fuel Assembly Design

Calculation	Bounding BWR Fuel Assembly	Bounding PWR Fuel Assembly
Fuel Assembly Effective Planar Thermal Conductivity	GE-11 9x9	W 17x17 OFA
Fuel Basket Effective Axial Thermal Conductivity	GE 7x7	W 14x14 OFA
MPC Density and Heat Capacity	GE 7x7	W 14x14 OFA
Fuel Basket Resistance to Thermosiphon Flow	GE-12/14 10x10	B&W 15x15

By always using the fuel assembly design that is bounding for a particular calculation, it is ensured that each calculation is individually bounding for all assembly designs.

With respect to decay heat, it is not necessary to link the maximum allowable decay heat to burnup, enrichment or cooling time. The decay heat load per fuel storage location is determined to yield peak fuel cladding temperatures less than the allowable limits for the design basis fuel defined in the forgoing. The permissible specific decay heat per fuel storage location is independent of the source of the heat (i.e., fuel or PWR non-fuel hardware). Thus, the maximum fuel decay heats are actually results of the thermal analyses, not inputs. The HI-STORM 100 System users are responsible for satisfying all burnup, enrichment and cooling time requirements (defined by criticality and shielding considerations) as well ensuring that the contents of a given fuel cell location do not emit decay heat at a rate greater than the CoC limit (defined by thermal considerations).

FSAR Section 2.1.6 and Table 2.1.5 have been modified to clarify the definition of the design-basis fuel assembly used for thermal analysis work.

Question 2-4

Clarify how, for example, the following set of circumstances would be properly addressed given proposed Change 14, identified on Page 17 of Attachment 2 of Revision 1 of this Amendment request. It is noted in Table 2.2.7 of the FSAR for the fabrication of the HI-STORM 100 overpack steel structure that the fabrication is performed under the provisions of the American Society of Mechanical Engineers (ASME) Boiler and Pressure Vessel Code Section III, Division 1, Subsection NF, and NF-4000. Section NF-4323 states, "Only welders and welding operators who are qualified in accordance with NF-4320 and Section IX shall be used." If Section IX qualification requirements are lowered in some future edition of the ASME Code, the Section III Subcommittee may raise the requirements in NF-4320 in order to maintain a consistent margin of safety and reliability for the welding processes. Consequently, with the design provisions frozen in time to the 1995 Edition of the ASME Code with the addenda through 1997, and the

reference to the latest version and addendum of the Code for Sections V and IX, it appears there could be a lowering of the provisions if such a circumstance were to arise. Additionally:

a) indicate how the impact of such a circumstance can be prevented from degrading the quality, reliability, and safety of the welding or nondestructive testing processes,

b) provide additional explanation for the clarifying statement that is proposed by the amendment, and

c) provide additional explanation relative to the reason and justification for the proposed change that assumes future changes to Section V and IX of the ASME Code do not impact the quality, reliability, or safety of the HI-STORM 100 System.

Proposed Change 14 addresses changes relative to the use of the ASME Code. It is stated that proposed changes to Section 3.3 of Appendix B of the Certificate of Compliance are to, "...allow the latest effective versions of ASME Sections V and IX to govern the performance of non-destructive examination (NDE) and welding, respectively." A related reference is made on page 2.2-14 of the FSAR in Section 2.2.4 in the third line of the first paragraph. The justification for the proposed change is, "Code Sections V and IX are periodically revised by the ASME to more closely reflect the state of the art in NDE and welding. It is prudent to require the performance of the activities to be in accordance with the latest techniques endorsed by ASME. This change does not affect the design or analysis of the storage system in any manner and is consistent with the current practice of the fabricator of the components governed by the Code."

This information is necessary to comply with the requirements of 10 CFR Part 72, specifically 72.234, 72.236(b), 72.236(c) relative to the application and approval of an amendment of a certificate of compliance in the subject area of the design bases, the design criteria and the fabrication of structures, systems and components important to safety.

<u>Response 2-4</u>

The hypothetical scenario described in the RAI wherein a section of the ASME Code deliberately reduces requirements, requiring compensatory action by another section is not consistent with the philosophy underlying the ASME Code. To our knowledge, Section IX of the Code has never been modified in a manner that results in reduced weld quality. Section III, on the other hand, relies on the weld category (Code Article NB-3351), and NDE requirements to define permissible weld efficiencies for stress analysis purposes. Welder qualification and welding specifications, including essential and nonessential variables, are entirely within the domain of Section IX; they do not factor in setting weld efficiencies at all.

The reason for upgrading the applicable welding and NDE editions of the Code to the latest effective version is rooted in practicality. Our manufacturer (UST&D, Inc.) is an ASME Section III, Class 1 certificate holder that fabricates a variety of Code components to the latest Code editions in addition to Holtec's MPCs, overpacks, and ancillaries, which are currently fabricated the 1995 edition, including 1996 and 1997 addenda. It is impractical to have different versions of the same weld procedures on the shop floor, each referring to a different edition of the Code, but otherwise identical in content. For ASME-stamped nuclear equipment, invoking later editions of the welding and NDE sections of the Code is a routine matter. We request that a similar flexibility be provided in the manufacturing of cask components.

To address the Staff's concern stated in the RAI, we have revised the FSAR and CoC to require Holtec International to perform a Code reconciliation evaluation before authorizing the adoption of a later version Section IX or Section V by the manufacturer. FSAR Subsection 2.2.4 and CoC Appendix B, Section 3.3 have been modified to add the Code reconciliation requirement.

Question 2-5

Clarify the current wording in Table 2.2.15.

In Table 2.2.15 on page 2.2-48, for the MPC basket supports and lift lugs, the reason for the ASME Code alternative to NB-1132.2(d) and NB-1132.2(e) is described in the exception, justification and compensatory measures section of the table. The following parenthetical statement is made: "(nonstructural attachments used exclusively for lifting and empty MPC)." This may lead to confusion since a lifting attachment is generically a structural attachment. It is suggested that after the word "attachments" the phrase "relative to the function of a loaded MPC that are" be inserted.

This information is necessary to comply with the requirements of 10 Part CFR 72, specifically 72.234, 72.236(b) and 72.236(c) relative to the application and approval of an amendment of a certificate of compliance in the subject area of the design criteria for the structures, systems and components important to safety.

Response 2-5

The text of Table 2.2.15 has be re-worded as suggested in the question.

Question 2-6

State the weight percentage of boron carbide in the METAMIC® that would be used in the HI-STORM cask.

With respect to use of Metamic®, the NRC staff's prior approval of Metamic® was intended to limit the boron carbide content to 15%. The previous approval was stated as a real density, which can be used to determine the percentage of boron carbide. Approval of a higher boron carbide content in Metamic® would require a complete testing program to demonstrate the durability and efficacy of the material. The percentage of boron carbide will be specified in the Certificate of Compliance (CoC).

This information is necessary to comply with the requirements of 72.236(a).

Response 2-6

It is true that NRC's approval of METAMIC® has thus far been limited to 15 wt.% B_4C. It is also true that EPRI's benchmark testing program [2-6.1] on METAMIC® was focused on 15 and 31 wt.% B_4C METAMIC®. While limited test data on 40 wt.% B_4C METAMIC® is available, large-scale manufacturing of METAMIC® at 40w/o B_4C has not been carried out thus far to ensure that the properties deduced from limited coupon testing can be reliably and repetitively obtained in production runs. Therefore, it is prudent to target the B_4C weight percentage in METAMIC® production to nominally 31%, for which a substantial body of experimental evidence to characterize the material already exists. In fact, EPRI's extensive characterization effort [2-6.1] provided the technical basis for NRC's recent approval of 31 wt.% B_4C METAMIC® for use in a PWR fuel pool for reactivity control [2-6.3].

As shown in the table below, the required weight percent of METAMIC® in Holtec MPCs will exceed the 31% nominal value if a 25% efficacy penalty (i.e., 75% ^{10}B credit) is applied to the poison material in the criticality analyses. However, because METAMIC® is an isotropic material with a very fine B_4C powder particle size (average particle size is typically between 10 and 15 microns, compared to over 100 microns for B_4C in Boral), a smaller efficacy penalty (90% ^{10}B credit) is more appropriate for METAMIC® in the criticality analyses. Further discussion on the appropriateness of 90% ^{10}B credit for METAMIC® and the tests specified to meet the intent of NUREG/CR-5661 are provided in Section 1.2 and 9.1 of the FSAR, respectively.

With 90% ^{10}B credit, the required B_4C weight percentage for METAMIC® is nominally 31% with the same neutron absorber panel thickness (including the tolerance in the as-manufactured panel) as the Boral panels presently being used in the Holtec's MPCs. With a target B_4C content of 31 wt.% for METAMIC®, a maximum of 32.5 wt% B_4C has been added to the proposed CoC for this material, as requested in the RAI question. The 1.5% above the nominal 31% wt% value ensures the as-fabricated material will be in general agreement with the EPRI testing work such that the results remain applicable, while allowing a reasonable range needed for the practicalities of fabrication. A lower B_4C value is not proposed for the CoC because the minimum B_4C content in the material is driven by the CoC requirement on minimum ^{10}B areal density and the thickness of the panel.

METAMIC® Data for Holtec MPCs

MPC Type	Min. B-10 areal density required by criticality analysis (g/cm^2)	Required Weight Percent of B_4C and Reference METAMIC® Panel Thickness			
		100% Credit	90% Credit	75% Credit	Ref. Thickness (inch)
MPC-24	0.020	27.6	31	37.2	0.075
MPC-68, -68FF, -32, -32F, -24E, and -24EF	0.0279	27.6	31	37.4	0.104

References:

[2-6.1] "Qualification for METAMIC® for Spent Fuel Storage Applications, EPRI Report 1003137, October 2001.

[2-6.2] "METAMIC® 6061+40% Boron Carbide Metal Matrix Composite Test", California Consolidated Tech. Inc. Report dated August 21, 2001 to NAC International.

[2-6.3] "Safety Evaluation by the Office of Nuclear Reactor Regulation Related to Holtec Report HI-2022871 Regarding Use of METAMIC® in Fuel Pool Applications," Facility Operating License Nos. DPR51 and NPF-6, Entergy Operations, Inc., Docket Nos. 50-313 and 50-368, USNRC, June 2003.

Question 2-7

State whether or not damaged fuel assemblies will also include assemblies with Burnable Poison Rod Assemblies (BPRAs), thoria rods or similar control elements that may themselves be damaged.

If damaged control elements are to be included, provide a discussion of the potential chemical, galvanic, or corrosion reactions that might occur between the cask, contents, and the materials contained within the damaged control assembly cladding.

This information is necessary to comply with the requirements of 72.236(a).

Response 2-7

Damaged non-fuel hardware is permitted to be stored in the MPC because no credit is taken for their reactivity control features (neutron absorption) in the dry storage criticality analyses. The materials used in the design of the non-fuel hardware defined in the FSAR do not pose a significant threat of galvanic or chemical reaction through interaction with the MPC cavity materials or environment during wet loading operations or long-term dry storage operation, as described below.

If control or poison rod components containing B_4C were to be in a damaged state resulting in the potential exposure of the boron carbide to the MPC cavity environment, then chemical and galvanic reactions are not expected because B_4C is an extremely stable and inert chemical compound. The known chemical characteristics of B_4C indicate that it is a non-metallic, electrically neutral material that will, therefore, not result in any galvanic or chemical interaction in the short-term water, or long-term helium environments inside the MPC. Likewise, some burnable poison rods are constructed with a stable, boron-based compound such as borosilicate glass, clad with stainless steel. No significant adverse galvanic or chemical reactions are anticipated in wet or dry conditions if the borosilicate glass were to be exposed because it also is a non-metallic, electrically neutral material. Guide tube hardware (e.g., thimble plug devices and water displacement guide tube plugs) are fabricated of solid stainless steel, a material known to be resistant to any significant galvanic or chemical reactions in water or helium.

If damaged silver-indium-cadmium (Ag-In-Cd) control elements were to expose the poison material in side to the MPC internal environment, no chemical interaction would be expected unless internal temperatures were high enough to result in the melting of the alloy. The Ag-In-

Cd material is designed for service in fuel assemblies during reactor operations, where temperatures are in the same range as those experienced by the hardware in storage. Therefore, no melting of the alloy and no adverse chemical reactions is expected. Since the elements in the Ag-In-Cd control elements differ significantly in their position in the electromotive series of elements compared to steels, galvanic interaction may be possible but is unlikely. Galvanic corrosion requires the presence of a electrically conductive medium between the dissimilar elements that would not exist during storage in the MPC (helium filled). Any possible galvanic interaction could only occur during the short time period when the cask is flooded during loading operations (up to approximately 4 days). This time frame is sufficiently short to render any reaction as insignificant. Thereafter, the system is dry and filled with an inert gas (helium) and galvanic interaction cannot occur.

Storage of thoria rods in the TN-designed thoria rod canister was previously approved under Amendment 1 to the CoC. There is only one Dresden Unit 1 thoria rod canister authorized for storage in the HI-STORM 100 System. The thoria rod canister is made entirely of Type 304 stainless steel. FSAR Table 2.1.12 has been revised to add the canister material. Thoria (thorium oxide, similar to uranium dioxide) is a stable, inert material that will not result in any galvanic or chemical reactions in the MPC.

Chapter 3: Structural Evaluation

None.

Chapter 4: Thermal Evaluation

Question 4-1

Provide the design basis decay heat generation for both Pressurized Water Reactor (PWR) and Boiling Water Reactor (BWR) fuel assemblies for long term normal storage in the FSAR.

This information is not provided in Table 2.1.6 as the FSAR states but is merely a reference to information cited in the NRC CoC.

This information is needed to assure compliance with 10 CFR 72.236(f).

Response 4-1

The total design basis decay heat generation for all the PWR MPCs is 38 KW and the BWR MPCs is 35.5 KW. This information is provided in Table 4.4.39 of the FSAR. The footnotes on Table 2.0.1 have been modified to eliminate the reference to the CoC. The maximum allowed heat load per assembly for uniform loading of the MPC for both the Pressurized Water Reactor (PWR) and Boiling Water Reactor (BWR) fuel assemblies are provided in section 2.1.9.1 in Table 2.1.26. Table 2.1.6 has been deleted.

Question 4-2

Provide the correct reference for the MPC Helium backfill pressure limits.

Page 4.1-2 of the FSAR states that the MPC is backfilled with helium up to the design-basis initial level specified in Table 1.2.2. However, Table 1.2.2 does not specifically include this information. Instead Table 1.2.2 points incorrectly to Table 3-1 of Appendix A of the CoC. Table 3-2 of Appendix A to the CoC contains backfill pressure limits.

This information is needed to assure compliance with 10 CFR 72.11.

Response 4-2

We regret the error in referencing. Helium backfill pressure specifications are provided in table 4.4.38 in the FSAR Chapter 4. The table is reproduced below for ready reference.

Table 4-2.1
MPC HELIUM BACKFILL PRESSURE SPECIFICATIONS

Item	Specification
Minimum Pressure	45.2 psig @ 70°F Reference Temperature
Maximum Pressure	48.8 psig @ 70°F Reference Temperature

Question 4-3

Explain why the FSAR makes reference to deleted Table 4.3-7.

This information is needed to assure compliance with 10 CFR 72.11.

Response 4-3

We regret the reference to Table 4.3.7, which should have been Table 4.3.1. The fuel cladding temperature limits used in the analyses are also discussed in Sections 4.0 and 4.1 of the FSAR.

Question 4-4

Clarify how the Holtec thermal model was used in Reference 4.1.3 of the FSAR.

Page 4.1-6 of the FSAR states that in reference 4.1.3, the Holtec thermal model is shown to over predict the measured fuel cladding temperature by a modest amount for every test set, giving the impression that Holtec models were used in the calculations performed in the referenced document 4.1.3 of the FSAR.

This information is needed to assure compliance with 10 CFR 72.236(f).

Response 4-4

Reference 4.1.3 did not use the Holtec HI-STORM thermal models in their studies. Holtec International analyzed the full size cask test data reported in Reference 4.1.3 of the FSAR using the thermal modeling methodology applied to the Holtec HI-STORM system. Results from the Holtec thermal model for the cask design in Reference 4.1.3 show that the predicted fuel cladding temperatures bound the measured fuel cladding temperatures provided in the Reference 4.1.3. These comparisons are documented in a Holtec report ("Topical Report on the HI-STAR/HI-STORM Thermal Model and Its Benchmarking with Full-Size Cask Test Data", Holtec Report HI-992252, Rev. 1). The text in the FSAR has been modified to clarify this matter.

Question 4-5

Provide temperature-dependent material properties that bound all component temperatures predicted for normal, off-normal, and accident conditions.

The material properties listed in Table 4.2.2 do not provide accurate values for materials that exceed 700°F.

This information is needed to assure compliance with 10 CFR 72.236(f).

Response 4-5

The material properties presented in the FSAR have been previously reviewed and approved by the NRC. No changes are proposed in this amendment request. Under normal conditions, the

highest reported temperature for material properties in Table 4.2.2 (700°F) is fairly close to the highest temperatures reached in the HI-STORM System. We present the highest reported temperatures from FSAR Tables 4.4.9, 4.4.10 and 4.4.26 (for HI-STORM) and Table 4.5.2 (for HI-TRAC) below:

Table 4-5.1
Maximum Calculated Temperatures for Normal Conditions

Material	Max. Temperature [°F] (HI-STORM PWR MPCs)	Max. Temperature [°F] (HI-STORM BWR MPCs)	Max. Temperature [°F] (HI-TRAC MPCs)
Cladding	688	731	745
Basket	633	706	728

For those conditions, where the temperatures are modestly above 700°F, property extrapolations from tabulated data are permitted because the properties changes are gradual and are reasonably expected to follow the trends without abrupt changes.

In accident evaluations, temperature excursions much above 700°F are reported within the fuel basket (up to 953°F, FSAR Table 11.2.9) for an all-ducts blocked scenario. For this evaluation fuel basket heat transfer characteristics obtained using properties up to 700oF are extrapolated using low order polynomials (up to second order) in the 700 – 1000 °F range. This approach is conservative because the fuel basket heat transfer characteristics in this temperature range are dominated by radiation heat transfer, which increases as the fourth power of temperature. In other words the use of a low order polynomial ignores higher-than-second-order contributions to heat transfer in the fuel basket.

Question 4-6

Update the calculation of regional effective thermal conductivities (fuel, basket, etc.) by adding more data sets to the calculation compared to the reported values (200, 450, and 700°F).

The limited number of data sets may not adequately represent the actual dependency of thermal conductivity on temperature, especially for the case of the fuel regions where highly non-linear behavior is expected. This behavior of the temperature-dependent thermal conductivity is not apparent from the data given in Table 4.4.3 of the FSAR.

This information is needed to assure compliance with 10 CFR 72.236(f).

Response 4-6

The calculation of effective region conductivities at only three temperature points has been previously approved by the NRC. No changes are proposed with this amendment request. Nevertheless, to be responsive to the staff request we herein provide the results from additional evaluations that validate the three point approach used in the FSAR.

We first consider the temperature dependence of the individual material thermal conductivities. The average of the upper and lower temperature bounds presented in the FSAR (200°F and

700°F, respectively) is close to the mid-range temperature (450°F) value. For a perfectly linear behavior, the thermal conductivity at 450°F would exactly equal the average of the thermal conductivities at 200°F and 700°F. We compared the conductivity values at 450°F with the average of the values at 200°F and 700°F for representative materials listed in Table 4.2.2. The following table presents such a comparison.

Table 4-6.1
Thermal Conductivities of Varies Materials in the HI-STORM System

Material	Thermal Conductivity at 450°F (Btu/hr-ft-°F)	Average of Conductivities at 200°F and 700°F (Btu/hr-ft-°F)	Percentage Uncertainty from Perfect Linearity
Helium	0.1289	0.1276	1.02%
Air	0.0225	0.0223	0.90%
Alloy X	9.8	9.7	1.03%
Carbon Steel	23.9	23.4	2.14%
Lead	17.9	18.15	1.40%

These results indicate that all of the materials listed in FSAR Table 4.2.2 exhibit near-linear thermal conductivity behavior.

Second, we examined the results of the evaluations presented in the FSAR, which show near-linear behavior of effective thermal properties of principal MPC components – fuel and fuel basket. As shown in Figures 4-6.1 through 4-6.6 provided herein with the RAI responses, which use values from Tables 4.4.1 through 4.4.3 of the HI-STORM FSAR, the fuel assembly and fuel basket effective planar thermal conductivity versus temperature trends show near linear behavior. Each of these figures shows a best-fit line through the data points.

Based on these considerations, we concluded that the temperature dependence of the thermal conductivities in the FSAR was nearly linear and that three data points were sufficient to capture the behavior. To further demonstrate the accuracy of our calculations, we have performed calculations to determine the planar thermal conductivity of an MPC-32 fuel basket at a temperature of 575°F, which straddles two temperature points (450°F and 700°F) used in the interpolation. The following table presents the results of this study.

Table 4-6.2:
Planar Conductivity of MPC-32 Fuel Basket

	Effective Planar Thermal Conductivity at 575°F [Btu/(hr-ft-°F)]	Percentage Uncertainty from Explicitly Calculated Value
Explicitly Calculated	1.364	N/A
Obtained from Second Order Polynomial fit to SAR Data Points	1.363	0.07%
Obtained from Linear Interpolation between SAR Data Points	1.350	1.04%

The explicitly calculated value is also compared to one obtained by linear interpolation between the 450°F and 700°F data points. This is included to show the near-linear temperature dependence of the fuel basket effective planar thermal conductivity, demonstrated by the good agreement between these two values.

Based on these considerations, it can be concluded that the thermal conductivity behavior of the individual materials, the fuel assemblies and the loaded fuel baskets are approximately linear and that the use of three points to generate a best-fit polynomial function for effective planar thermal conductivity versus temperature yields accurate results.

To summarize, the explicitly calculated value is nearly identical to that obtained using a best-fit second-order polynomial generated from the three data points reported in the FSAR. Such an agreement demonstrates that the use of three data points to generate a best-fit polynomial, used in the FLUENT models of the HI-STORM System, is accurate.

Question 4-7

Clarify which fuel assemblies are the bounding configurations for analysis at design basis maximum heat loads.

The FSAR states that the W-17x17 OFA PWR and GE11- 9x9 BWR fuel assemblies are determined to be the bounding configurations for analysis at design basis maximum heat loads. However, the information presented in Table 2.1.5 of the FSAR does not agree with the above statement.

This information is needed to assure compliance with 10 CFR 72.11.

Response 4-7

The HI-STORM thermal analysis uses a Design Basis Fuel (DBF) assembly which is an artificial construct to bound the conduction and flow resistance characteristics of fuel assemblies of its class (PWR or BWR) proposed for storage. As a result there is no single fuel assembly type that would have all of the bounding characteristics of the DBF. Rather certain fuel types tabulated below would equal some characteristics of the DBF and for the bulk of the fuel population, all of

the characteristics would be bounded with a margin. The bounding fuel assemblies for individual fuel characteristics are:

Table 4-7.1
Bounding Fuel Assembly Types

Characteristic	Bounding BWR Fuel Assembly	Bounding PWR Fuel Assembly
Planar Thermal Conductivity	GE-11 9x9	W 17x17 OFA
Axial Thermal Conductivity	GE 7x7	W 14x14 OFA
MPC Density and Heat Capacity	GE 7x7	W 14x14 OFA
Axial Flow Resistance	GE-12/14 10x10	B&W 15x15

FSAR Section 2.1.6 and Table 2.1.5 in Chapter 2 and FSAR Section 4.4 in Chapter 4 have been modified to include the information provided above.

Question 4-8

Provide the specific references where the MPC isotropic conductivities have been benchmarked.

The FSAR states that a formulation of isotropic thermal conductivities, based on a root mean squared (RMS) function of the planar and axial thermal conductivity, has been benchmarked but the references or details of this benchmarking are not provided in the FSAR.

This information is needed to assure compliance with 10 CFR 72.236(f).

Response 4-8

The Square Root of Mean Sum of Squares (SRMSS) formulation for MPC basket conductivities is benchmarked in the following Holtec Report:

> "Effective property evaluations of HI-STAR 100 and HI-STORM Dry Cask System Multi-Purpose Canisters", Report HI-971788, Rev. 10, Appendix C – Equivalent Isotropic Effective Thermal Conductivity Formula Proof.

A copy of this report was submitted to the NRC in May, 2003 on Docket 71-9261.

However, as discussed in the Subsection 4.4.1.1.4 of the proposed Revision 2B of the FSAR, the version 6.1 of the FLUENT code used in recomputing the thermal response of the HI-STORM system, permits the input of orthotropic thermal conductivities for the MPC basket. Therefore, the recourse to the SRMSS approach is no longer necessary.

Question 4-9

Provide the definition for every term in Chapter 4's mathematical expressions. Please note several typographical errors.

This information is needed to assure compliance with 10 CFR 72.11.

Response 4-9

Definitions for all term in the equations and mathematical expressions used in Chapter 4 are provided in the FSAR. The typographical errors have been corrected.

Question 4-10

Correct the symbol used to define fuel age for inner region of regionalized thermal loading.

The FSAR states incorrectly that fuel age for inner region is represented by T [Tau]. T_1 is the appropriate nomenclature.

This information is needed to assure compliance with 10 CFR 72.11.

Response 4-10

Reference to the fuel age is no longer necessary to follow the description of regionalized loading. In proposed Revision 2B of the FSAR, this term is deleted.

Question 4-11

Correct the expression used to represent the outer region heat load.

The FSAR incorrectly states that Q_2, the outer region heat load equals N_1q_1.

This information is needed to assure compliance with 10 CFR 72.11.

Response 4-11

The text in the FSAR has been corrected to state that the outer region heat load equals N_2q_2.

Question 4-12

Clarify why Reference 4.3.2, which is addressed in different Sections of the FSAR, has been deleted from the list of references.

This information is needed to assure compliance with 10 CFR 72.11.

Response 4-12

The reference 4.3.2 was cited in section 4.4.1.1.10 of the proposed revision 2A of the FSAR. This section has been deleted in the proposed revision 2B of the FSAR and therefore the reference is no longer required. This reference has been deleted from the list of References.

Question 4-13

Provide the maximum temperatures for neutron absorber and MPC pressure boundary materials.

The FSAR states that the maximum temperatures of the neutron absorber and MPC pressure boundary materials are below their design temperature and ASME code limits. However, the maximum temperatures for neutron absorber and MPC pressure boundary materials are not provided in the FSAR.

This information is needed to assure compliance with 10 CFR 72.236(f).

Response 4-13

The maximum temperatures for the MPC basket materials and the MPC pressure boundary are provided in Tables 4.4.9, 4.4.10 and 4.4.26 of the FSAR. The neutron absorber, as illustrated in Figure 4.4.7 of the FSAR is sandwiched in a Box wall-to-sheathing pocket. For this reason the neutron absorber and fuel basket temperatures are essentially the same. A footnote is added to these tables to state that the maximum neutron absorber temperature is essentially the same as the reported maximum MPC basket temperature. The predicted temperatures are below the design temperatures limits for the neutron absorber material.

Question 4-14

Provide additional justification why the flow resistance factors employed to simulate flow through MPC 3-D continuum are conservative and bounding.

This information is needed to assure compliance with 10 CFR 72.236(f).

Response 4-14

The flow resistance factors used to simulate the loaded MPC fuel basket bound the actual resistance as the result of conservative assumptions made with respect to fuel basket and fuel assembly geometry, flow regime, and the effects of localized constrictions. Each of the conservative assumptions is discussed below which, in aggregate, yield conservative and bounding flow resistances factors.

Conservative Assumption 1 – Fuel Storage Cell Open Area

The key fuel basket geometry input value is the fuel storage cell open area. The fuel assembly components subtract from this area, so a conservative cell area will yield a conservative flow resistance.

All PWR fuel basket flow resistance calculations use a fuel storage cell inner dimension of 8.75 inches. The following table compares the assumed and actual PWR fuel basket storage cell inner dimensions.

Table 4-14.1
Comparison of PWR Fuel Basket Storage Cell Dimensions

MPC Designation	Assumed Fuel Cell Inner Dimension	Actual Fuel Cell Inner Dimension	Cell Free Area Conservatism+
MPC-24	8.75"	8.92"	3.9%
MPC-24E	8.75"	20 at 8.75" 4 at 9.05"	1.2%
MPC-32	8.75"	8.79"	0.9%

In addition, for the MPC-24 and MPC-24E only, the flow area that exists in the inter-cell flux traps is completely neglected. This conservatively neglects on the order of 20% of the total fuel basket flow area.

The MPC-68 flow resistance calculations assume that all flow is within the channel of a fuel assembly so equipped, even though the configuration of the bottom mouse holes and the cell area permit flow around the channel as well. This conservatively neglects on the order of 30% of the total flow area.

Conservative Assumption 2 – Mouse holes Flow Area

The mouse holes at the bottom and top of the fuel baskets are elongated semicircular holes, which can be thought of as semicircles of diameter D atop rectangular regions of width D. Only the semicircular region, however, are credited in the flow resistance calculations. The following table compares the assumed and actual mouse hole flow areas.

Table 4-14.2
Comparison of Mouse hole Flow Areas

MPC Designation	Assumed Flow Area	Actual Flow Area	Flow Area Conservatism
BWR	2.45 in^2	4.95 in^2	102%
PWR	6.28 in^2	7.78 in^2	24%

Conservative Assumption 3 – Fuel Assembly Grid Strap Material Thickness

+ Percent conservatism is equal to [100x{(Actual Fuel Cell Dimension)^2 – (Assumed Fuel Cell Dimension)^2}/(Actual Fuel Cell Dimension)^2].

The grid straps along the length of the fuel assemblies result in localized flow contractions and subsequent expansion that increase the flow resistance. All such straps are assumed to be 0.05" thick. Actual straps are typically 0.035" thick or less for PWR fuel assemblies and 0.040" thick for BWR fuel assembles. This assumption results in conservative grid strap region porosities on the order of 8% for BWR fuel and 12% for PWR fuel.

Conservative Assumption 4 – Laminar Flow

The flow is assumed to be laminar for all conditions. For a flow of any given average velocity, a laminar flow will yields a higher pressure drop and, therefore, a higher flow resistance.

Conservative Assumption 5 – Bounding Expansion and Contraction Factors

In the flow resistance calculations, the contraction into and the expansion out of a grid strap is expressed in terms of a non-dimensional loss factor, often referred to as a K factor. The value of the K factor for a contraction or an expansion is a function of the area ratio. In the limit, contraction from an infinite reservoir into a finite area or expanding from a finite area into an infinite reservoir, the K-factors are 0.5 for contraction and 1.0 for expansion. The total K-factor used for the grid straps is the sum of these bounding values, or 1.5.

Question 4-15

Show that for a given decay heat capacity, the uniform fuel loading represents the bounding case in terms of cask thermal response. Clarify also if there is a maximum allowable value for the decay heat per fuel assembly in Region 1, for regionalized fuel loading.

This information is needed to assure compliance with 10 CFR 72.236(f).

Response 4-15

In proposed Revision 2B the HI-STORM FSAR, a comprehensive array of thermal analyses were undertaken to characterize the peak cladding temperature for uniform and regionalized loading scenarios. The results are plotted in Figures 4.4.33 through 4.4.35 in the HI-STORM FSAR for the PWR and BWR MPCs. In all cases, the peak cladding temperatures are below the ISG-11 limit of 400°C by varying margins.

Under regionalized storage scenarios, there is no single value for maximum heat load per fuel assembly. Rather, as discussed in Subsection 2.1.9 of the FSAR, the permissible heat loads for the two regions are a function of a user selectable parameter "X" which is defined as the ratio of inner to outer region assembly heat loads. A method to compute the permissible heat loads in Regions 1 and 2 is provided in subsection 2.1.9. For all permissible values of "X", the computed peak cladding temperature is below 400°C (X=1 represents the uniform or single region storage).

Question 4-16

Provide additional justification in the FSAR why after Forced Helium Dehydration (FHD) failure, the forced convection state will degenerate to natural convection corresponding to normal storage conditions.

The FSAR states that failure of the FHD will result in temperatures similar to normal storage even though limited ventilation exists for loading operations compared to normal storage.

This information is needed to assure compliance with 10 CFR 72.236(f).

Response 4-16

The HI-TRAC is provided with a connection at the bottom to introduce either air or water (utilities available at all power plants) through the annulus for MPC cooling via forced ventilation or water circulation. During the operation, the MPC FHD system is also connected to compressed helium bottles, which can be used to raise MPC pressure and accelerate natural convection cooling of the stored fuel. These hardware provisions ensure adequate fuel cooling under a postulated FHD failure.

Question 4-17

Provide the calculated maximum cladding hoop stress, or suitable reference from the FSAR, for Conditions 5 and 6 of Table 4.5.11.

Table 4.5.11 of the FSAR states that hoop stress compliance is required for Conditions 5 and 6.

This information is needed to assure compliance with 10 CFR 72.236(f).

Response 4-17

The cladding hoop stress is a function of the internal pressure and cladding's radius-to-thickness ratio. The FSAR includes these conditions for a cask user to optionally make a site-specific estimate of the hoop stress using fuel specific data to permit a less restrictive clad temperature limit (570°C) during fuel drying in MPC loading operations and on-site transfer in a HI-TRAC cask. This option is available for Moderate Burnup Fuel only. A methodology for computing cladding stress is set forth in Section 4.5.2 of the FSAR. The calculation is required to meet the 90 MPa clad stress criterion.

Question 4-18

Provide the calculated maximum cladding hoop stress, or suitable reference from the FSAR, for Conditions 7 and 10 of Table 4.5.12.

Table 4.5.12 of the FSAR states that hoop stress compliance is required for Conditions 7 and 10.

This information is needed to assure compliance with 10 CFR 72.236(f).

Response 4-18

Please refer to the response to RAI 4-17.

Question 4-19

Clarify why the time limit for temperature limit compliance is the same for Conditions 2 and 6 (HI-TRAC horizontal orientation) and Condition 4 and 9 (HI-TRAC vertical orientation) of Table 4.5.12 of the FSAR, given the fact that horizontal orientation is more limiting in terms of heat rejection capabilities.

This information is needed to assure compliance with 10 CFR 72.236(f).

Response 4-19

The reviewer is correct in that horizontal orientation is more limiting in terms of heat rejection capabilities. For establishing a lowerbound time limit for the referenced conditions, in proposed revision 2A, certain overarching conservatisms were made in the analysis. As a result, the calculated time is less than what would be computed for horizontal (and, of course, vertical) orientation. These were: (i) convection heat transfer inside the MPC is ignored, (ii) heat dissipation from cask is neglected. Stated differently, the cask (in either horizontal or vertical orientation) was assumed to heatup in an adiabatic manner and the time to reach the temperature limit (400°C) was computed.

In proposed revision 2B, thermosiphon cooling of the MPC in the vertical orientation has been recognized. Threshold heat load limits have been determined for both the horizontal and vertical orientation of the HI-TRAC, which meets the ISG-11 peak cladding temperature of 400 °C. For scenarios where the HI-TRAC has to handle a greater than threshold heat load (provided in Table 4.5.12 for both vertical and horizontal orientation), supplemental cooling of the annulus between the MPC and the HI-TRAC is specified as a mandatory requirement. The supplemental cooling requirement is discussed in Subsection 4.5.6 of the FSAR.

Question 4-20

Clarify what is the bounding scenario for on-site transport in the HI-TRAC transfer cask.

The FSAR states that maximum fuel clad temperatures are listed in Table 4.5.2 for a limiting case for on-site transfer. According to Tables 4.5.2 and 4.5.12 of the FSAR, a maximum cladding temperature of 712°F (378°C) is obtained. However, maximum cladding temperatures for Conditions 2, 4, 6, and 9 (which may be higher than Condition 3) are not provided.

This information is needed to assure compliance with 10 CFR 72.236(f).

Response 4-20

The bounding scenario is one for which the highest cladding temperature is obtained during HI-TRAC on-site transport operations. The fuel cladding temperatures for HI-TRAC on-site transport operations are provided in Table 4.5.12 of the FSAR. The limiting scenarios are

Conditions 3 and 7 listed in this table. The results of HI-TRAC temperatures for these conditions are provided in Table 4.5.2 of the FSAR.

Question 4-21

Provide a bounding analysis for MPC cool down and reflooding for refueling operations.

The FSAR states that because the optimal method for MPC cool down is heavily dependent on the location and availability of utilities at a particular nuclear plant, mandating a specific cool down method cannot be prescribed in the FSAR. Typically, a cask user would use the design basis analysis provided by the CoC holder without re-analyzing any event that is already covered in the cask CoC.

This information is needed to assure compliance with 10 CFR 72.236(f).

Response 4-21

An analysis for MPC cool down and reflooding for fuel unloading operations is revised with the assumption of an MPC loaded with fuel assemblies at the design basis maximum heat load of 38 KW. The analysis is provided in Subsection 4.5.7 of the FSAR.

Question 4-22

Provide the thermal analysis for the HI-TRAC located in a dry cylindrical pit with a maximum decay heat capacity of 40 kW. Provide also additional measures needed to ensure fuel cladding temperature remains below the allowable Interim Staff Guidance (ISG) 11 temperature limit of 752°F (400°C).

The analysis performed for this scenario uses a decay heat load <40kW. It is not clear from the information provided in the FSAR if this scenario using a decay heat load of 40kW would be bounded by design basis thermal conditions.

This information is needed to assure compliance with 10 CFR 72.236(f).

Response 4-22

The option to locate a HI-TRAC in a dry cylindrical pit with has been removed from the FSAR. The text in FSAR Subsection 4.5.7 has been modified to reflect this change.

Question 4-23

Provide the pressure analysis results for short-term conditions, or suitable reference from the FSAR.

The FSAR states that corresponding MPC internal pressure evaluation shows that the MPC confinement boundary remains well below the short-term condition design pressure but the analysis results are not provided.

This information is needed to assure compliance with 10 CFR 72.236(f).

Response 4-23

The bounding on-site transport condition MPC cavity pressure (MPC-68) is provided below.

Maximum Initial Fill Pressure @ 70 F (psia) (See response to RAI 4-2)	63.5
MPC-68 Average Cavity Temperature (K)	565.42
MPC Helium Pressure (psia)	122.1

The initial fill pressure in the above table is equal to the maximum permissible backfill pressure of 48.8 psig (or 63.5 psia). The MPC enclosure vessel pressure remains below the short-term condition design pressure limit of 124.7 psia (see FSAR Table 2.2.1).

Question 4-24

Clarify how the normal handling and onsite transfer evaluation establishes compliance with the provisions of ISG-11.

It is not clear if the thermal analysis presented in the FSAR shows complete compliance with ISG-11 (i.e., applicable thermal cycling analysis along with calculated temperature differences).

This information is needed to assure compliance with 10 CFR 72.236(f).

Response 4-24

In addition to placing a limit of 400°C on the peak cladding temperature under MPC loading and normal storage conditions, the ISG-11 Rev. 2 also specifies that the amplitude of temperature cycling of the fuel cladding be less than 65°C. The 65°C thermal transient amplitude limit is applicable only to high burnup fuel (HBF) and is presumably imposed to protect the relatively non-ductile cladding from excessive thermal strain due to large amplitude temperature transients. The above restriction on the cladding thermal cycling amplitude is observed in the HI-STORM system by forbidding the use of vacuum drying and by mandating the use of Forced Helium Dehydration (FHD) for HBF. Intrinsic to the FHD process is the fact that the fuel cladding temperature will rise gradually from the in-pool temperature (usually below 150°F) to about 500°F (260°C). This temperature rise, quite obviously in the non-hydride radicalizing temperature range, will occur gradually as the FHD system vaporizes the water in the canister and rejects it in the demoisturizer module. Upon completion of fuel drying, backfilling of helium and closure of the MPC ports, the threat of subjecting the cladding to a thermal transient is eliminated because the results of any sudden ambient temperature change is smoothened by the large thermal inertia of the MPC. Thus, mandating of the FHD method for MPC cavity drying for HBF eliminates a causative mechanism to induce a significant thermal transient (amplitude ≥ 65°C) on the fuel cladding.

Question 4-25

Clarify how the ISG-11 temperature limit requirement of 400°C is demonstrated for all fuel loading and short term operations.

The FSAR states that "ISG-11 requirements to ensure that maximum cladding temperature under all fuel loading and short term operations be below 400°C" is demonstrated in Section 4.5. Analyses results are presented in the FSAR for short term operations where a maximum cladding temperature limit of 570°C and hoop stress compliance is required.

This information is needed to assure compliance with 10 CFR 72.236(f).

Response 4-25

As stated in Section 4.1 of the FSAR, for moderate burnup fuel (MBF), additional latitude in the permissible temperature limits is provided for fuel loading, specifically during vacuum drying of the MPC. The FSAR has proposed that the permissible cladding temperature for MBF be governed by the following two criteria:

a. The maximum estimated cladding hoop stress (σ_{max}) during fuel loading does not exceed 90 MPa.

b. The maximum computed cladding temperature during fuel loading does not exceed 570°C.

For MBF that does not muster compliance with the aforementioned σ_{max} criterion (a), the more restrictive ISG-11, Rev. 2 temperature limit (400°C) will apply.

Because the cladding stress is a function of the cladding thickness (and hence a function of the extent of cladding corrosion), the estimation of the cladding stress, of necessity, must be fuel-specific. A user of the HI-STORM system is permitted to meet the less restrictive criteria if fuel batch-specific analysis using the methodology presented in this FSAR is performed to establish compliance with the two foregoing criteria. To cover the entire range of fuel loading and on-site transfer scenarios, Section 4.5 of the FSAR contains a treatment of cases covered by the 400°C and 570°C temperature limits.

For all other normal storage and short-term operations, proposed Revision 2B of the FSAR limits the peak cladding temperature to 400°C for all SNF.

Question 4-26

Provide a realistic evaluation of the conservatisms included in the HI-STORM 100 thermal model.

Appendix 4.B of the FSAR provides a general description of the conservatisms embedded in the HI-STORM 100 thermal analysis and how these conservatisms influence the computed maximum fuel cladding temperature. A realistic evaluation may be necessary because of the requested decay heat capacity and the applicant's calculated peak cladding temperatures.

This information is needed to assure compliance with 10 CFR 72.236(f).

Response 4-26

The numerous elements of conservatism in the HI-STORM thermal model are enumerated in Section 4.6 of the FSAR and further elaborated in Appendix 4.B. However, among the array of conservatisms, we have identified a potential non-conservatism that pertains to the assumption of the MPC axial surface temperature profile used in the two-step solution wherein the MPC and the annulus thermal models were solved separately with the MPC's outer surface temperature serving as the common interface (boundary) condition. We have determined that the linear temperature profile assumed for the interface becomes somewhat non-conservative at higher helium pressures (in the order of 7 atmospheres). A high helium internal pressure produces a vigorous thermosiphon action, resulting in a sharper rate of rise of MPC shell temperature near the top of the canister, negating the liner temperature profile assumption).

The two-step solution, an analysis palliative made necessary by the older version of FLUENT, is no longer a limitation in FLUENT Version 6.1, which we have successfully QA-validated in the past six months. In this latest version of FLUENT, the HI-STORM thermal problem is solved in one step, i.e., no a priori assumption of the MPC shell surface temperature profile is required. To eliminate the sole source of a potential non-conservatism, all thermal analyses reported in Chapters 4 and 11 of the FSAR have been rerun using FLUENT Version 6.1 and the reported results have been accordingly revised. The textual matter in Chapter 4 has also been enhanced to improve readability. Furthermore, to provide a complete information base, a new Calculation Package that contains all the analyses summarized in the FSAR has been prepared. This new Calculation Package, along with a CD containing typical input and output files will be forwarded to the SFPO within a week's time.

As the revised text in Chapter 4 on the thermal model states, a number of conservative assumptions in the thermal model continue to render the computed solutions conservative. To illustrate the effect of removing a major assumption, namely, over-specification of the resistance to the flow of helium by the stored fuel assembly, the case of MPC-68 was rerun with flow resistance data provided by the General Electric Company (Also see response to RAI 4-14). The operating helium pressure was also set at the nominal value (105 psi (min.) + 4%). The result of the calculation (documented in the Calculation Package) show that the peak cladding temperature is reduced by 68°F from the design basis computed value reported in the FSAR (Table 4.4.10). The effect of other assumptions listed in Section 4.4.6 is likely to be more modest, but the fact that their removal will result in an even lower peak cladding temperature is evident from their nature (such as increasing the thermal conductivity of the HI-STORM concrete to a realistic value will evidently cause enhanced heat rejection from HI-STORM and consequently, a lower peak cladding).

Chapter 5 - Shielding Evaluation

Question 5-1

Justify the reason for eliminating As Low As Reasonably Achievable (ALARA) design objective dose rates for the HI-STORM. Clarify how the proposed design satisfies the requirements of 10 CFR 72.104(b).

The amendment results in significant increases in dose rates for both the transfer cask and storage overpack, but does not specify what upper-bound dose rates are considered to be ALARA and that can be practicably used by general licensees.

This information regarding the source term and shielding analysis is needed to determine compliance with 10 CFR 72.236(d).

Response 5-1

The design objective dose rate values were removed in the LAR because as the allowable decay heat loads increased, the dose rates increased correspondingly and rather than increase the design objective dose rates, the text was altered to discuss the fact that there is no single dose rate limit for the surface of a dry storage cask in 10 CFR 72. Based on previous loading campaigns, it is clear that the occupational dose is considerably reduced with increasing experience. It is also true that the licensees are well versed in dealing with activities involving high radiation levels. Therefore, the licensees are in a far better position to determine what the acceptable levels of radiation are during loading campaigns in accordance with ALARA and their radiation protection program.

However, it is recognized that the cask manufacturer also has a responsibility to design a system that reduces dose to the largest extent practical within specific design constraints (e.g. crane capacity, ISFSI layout, etc.). Therefore, the design objective dose rates have been restored in FSAR Sections 5.1.1 and 2.3.5.2 with the values updated corresponding to the requested heat loads.

Question 5-2

Justify the burnup and cooling time analogy that explains why MPC-24 vent doses are used to represent the higher vent dose rates from the MPC-32.

The dose rates on the side of the overpack appear to be relatively the same according to Tables 5.1.1 and 5.1.2 for both configurations. It also appears that the proposed contents are structured to result in the same heat load in both the MPC-24 and MPC-32. For example, both configurations employ the same equation for allowable burnup for regionalized contents, and the outer periphery fuel cells could be loaded with the same total heat load (i.e., 20 kW) in both configurations.

This information regarding the source term and shielding analysis is needed to determine compliance with 10 CFR 72.236 (d).

Response 5-2

The MPC-24 was used as the design basis MPC for the cask array dose analysis in both Revision 0 and Revision 1 of the FSAR. In this LAR, the MPC-24 continued to be used in the array analysis even though the cask with the MPC-32 has a slightly higher dose rate at the vents. This is acceptable because the vents are a small fraction of the radial surface area. As such, the dominant effect on the dose at distance is the radial portion of the overpack between the vents, which comprises approximately 91% of the total radial surface area compared to approximately 1.3% for the vents. The MPC-24 has higher dose rates at the mid-plane than the MPC-32, therefore this larger dose rate over a larger area will offset the slight increase that the MPC-32 experiences at the ventilation ducts and provides a bounding case. FSAR Section 5.1.1 of the SAR has been modified as a result of this response.

Question 5-3

Clarify the reason for not including BPRA contribution in the off-site dose estimates. Specify how a general licensee should incorporate BPRA contributions in its site-specific evaluations under 10 CFR 72.212.

This information regarding the source term and shielding analysis is needed to determine compliance with 10 CFR 72.236 (d).

Response 5-3

The BPRA contribution was not included in the offsite dose rate estimate because the fuel burnup and cooling times used in the analysis are higher than the burnups and cooling times permitted by the CoC. The increase in dose rate due to using a burnup-cooling time combination higher than the allowable combination was sufficient to offset the increase in dose rate that would be seen from the inclusion of BPRAs with the lower burnup and cooling time combination permitted by the CoC.

In the interest of conservatism, the off-site analysis has been revised to include the contribution of BPRAs. FSAR Section 5.1.1 has been modified to state that the general licensee should consider the details of the fuel that is being stored and, if appropriate, include the contribution from BPRAs in their site-specific dose analysis.

Question 5-4

Clarify whether the burnup and cooling time combination of 75,000 MDW/MTU and 6 years bounds the combination of 74,792 MDW/MTU and 5 years, as specified in Table 2.4-1 of proposed Appendix B.

This information regarding the source term and shielding analysis is needed to determine compliance with 10 CFR 72.236 (d).

Response 5-4

The dose rate analysis was performed with a bounding burnup and cooling time combination of 75,000 MWD/MTU and 5 years cooling. In FSAR Tables 5.2.5, 5.2.12, and 5.2.16, the title and

data both incorrectly refer to a burnup and cooling time of 75,000 MWD/MTU and 6 year cooling. We apologize for these editorial errors and we have corrected both the titles and the data.

Question 5-5

Include an accident dose estimate assuming a constant exposure at the site-boundary that is consistent with the recovery time for the transfer cask accident.

The staff notes that this value should serve as a regulatory basis for potential changes performed under 10 CFR 72.48.

This information regarding the source term and shielding analysis is needed to determine compliance with 10 CFR 72.236 (d).

Response 5-5

The accident dose rate analysis described in FSAR Section 5.1.2 has been modified to include the accumulated accident dose rate for a 30 day duration in addition to the current analysis.

Question 5-6

Provide the following information regarding source term estimates:

(a) Specify in Section 5.2 (numerically) the expected error in source term estimates for actinides and fission products important to shielding (e.g., Cs-134 and Cm-244), and source term estimates for actinides and fission products important for total decay heat for the high burnup fuels requested in the amendment.

(b) Justify why high burnup source term uncertainties are not applied in the new shielding and thermal analyses.

This amendment requests a significant increase in radiological and thermal source terms in combination with removal of conservatisms in the currently approved shielding and thermal analyses. Calculation uncertainties in the source term methodology may now have a greater impact on doses and cask temperatures, with respect to radiological and thermal safety margins present in the currently approved design. A sensitivity analysis may be a method to illustrate the effect of uncertainties on radiological and thermal safety margins.

This information regarding the source term and shielding analysis is needed to determine compliance with 10 CFR 72.236 (d) and (f).

Response 5-6

(a) The error in the source terms calculations varies depending on the source being calculated (i.e. neutron source, gamma source, or decay heat). The reason for the variation is that different nuclides are important for each of the source terms. For example, Cm-244 is the dominant nuclide for neutron source (see Response 5-8) while Cs-134 and Eu-154 are two

of the dominant nuclides for gamma source. For the decay heat source, the importance of nuclides also varies with burnup, cooling time, and enrichment.

These variations make it extremely difficult to estimate the error for the source terms. Reference 5-6.1 presents a methodology for estimating the uncertainty in decay heat calculations through a combination of uncertainty analysis and comparisons with measurement data. An approach similar to this is used to estimate the uncertainty in the decay heat calculations which is discussed below. Previously published comparisons of calculations to measurements reported in References 5-6.2 through 5-6.4 were used in the error estimation for all three source terms (i.e. neutron source, gamma source, and decay heat).

The measurement data published in these references cover a burnup range up to 47 GWD/MTU. The data presented in those references do not indicate any significant trend with burnup. Therefore, it is considered acceptable to use this data for the entire burnup range requested for approval in this LAR. In this revision of the LAR, the maximum requested burnup for PWR has been reduced from 75,000 MWD/MTU to 68,200 MWD/MTU which is the value previously approved in Revision 1 of the CoC. The maximum requested burnup for BWR fuel has been reduced from 70,000 MWD/MTU to 65,000 MWD/MTU. These revised values were chosen because they are somewhat higher than the maximum permissible burnups for reactor operation at nuclear power plants.

Neutron and Gamma Source

References 5-6.2 through 5-6.4 report average calculated-to-measured ratios for Cs-134 and Eu-154 from 0.79 to 1.009 and 0.79 to 0.98, respectively. For Cm-244, average calculated-to-measured ratios are reported in the range of 0.81 to 0.95. These values provide representative insight into the entire range of possible error in the source term calculations. These non-conservative errors are offset by the conservative nature of the inputs used in the source term calculations (e.g. fuel assembly characteristics, specific power, single cycle, etc.). Further discussion is provided in the response to Part (b) of this response below.

Decay Heat Source

Using an approach similar to that described in Reference 5-6.1, the potential error in the decay heat calculations was estimated to be in the range of 3.5 to 5.5% at 3 year cooling time and 1.5 to 3.5 % at 20 year cooling time. Further discussion of the error estimation can be found in Holtec calculation package HI-2022847 which is being submitted under separate cover.

(b) The uncertainty/error in the neutron and gamma source strength is not included in the shielding analysis for two main reasons. First, the burnups used in the analysis are considerably higher than the burnups allowed by the CoC as discussed in Section 5.1 of the FSAR. This provides significant margin in the calculation of the dose rates. Second, Technical Specification (TS) 5.7 (see Response 10-3) provides assurance that the calculated dose rates used to demonstrate compliance with the 10CFR72.104 regulations are bounding by comparing measured dose rates for each loaded cask to site-specific calculated limits per TS 5.7.

The decay heat calculations performed in Chapter 5 are not used as input to the thermal analysis. Rather, the thermal analysis specifies the maximum permissible decay heat per fuel storage location that can be stored in an MPC. This maximum permissible decay heat is then used through the equations in the CoC to calculate the maximum permissible burnup as a function of cooling time. The equations in the CoC were established by curve-fitting the burnup versus decay heat data calculated with ORIGEN-S. The thermal analysis, as discussed in Chapter 4 of the FSAR, has greater than 5% margin in the calculated allowable decay heat per assembly in a PWR basket. Therefore, no uncertainty is applied to the decay heat calculations for the PWR fuel. For BWR fuel, the margin in the thermal analysis is considerably less. Therefore, in order to maintain an appropriate level of conservatism, a 5% uncertainty has been applied to the decay heat calculations performed in FSAR Chapter 5 for BWR fuel. This uncertainty is applied by penalizing the ORIGEN-S calculated decay heats by 5% before fitting the equation to the burnup versus decay heat data.

Sections 5.2 and 5.6 of the FSAR has been modified as a result of this RAI.

References:

5-6.1 "Technical Support for a Proposed Decay Heat Guide Using SAS2H/ORIGEN-S Data," NUREG/CR-5625 ORNL-6698, September 1994.

5-6.2 "Validation of SCALE (SAS2H) Isotopic Predictions for BWR Spent Fuel," ORNL/TM-13315, September 1998.

5-6.3 "An Extension of the Validation of SCALE (SAS2H) Isotopic Predictions for PWR Spent Fuel," ORNL/TM-13317, September 1996.

5-6.4 "Isotopic Analysis of High-Burnup PWR Spent Fuel Samples From the Takahama-3 Reactor," NUREG/CR-6798 ORNL/TM-2001/259, January 2003.

Question 5-7

Confirm the statement in Section 5.2.1 that gamma dose from energies above 3.0 MeV are insignificant for cooling times less than 5 years.

This information regarding the source term and shielding analysis is needed to determine compliance with 10 CFR 72.236 (d).

Response 5-7

As the question implies, the gamma source spectrum changes with cooling time and the percentage of the gamma source that is present in the 3-11 MeV energy range increases as the cooling time decreases. MCNP calculations have been performed which confirm that, at a 3-year cooling time, the contribution to the total dose from energies above 3 MeV is less than 1% and therefore can be neglected in the analysis presented in FSAR Chapter 5.

Question 5-8

Provide the following information regarding the neutron source spectrum used in the shielding analysis:

(a) Confirm the statement in Section 5.2.2 that ^{244}Cm accounts for 96% of the total neutron source for the new high burnup fuel, and for the fuel with cooling times less than 5 years.

(b) Clarify if there are any additional uncertainties in the neutron spectrum with respect to the source term method used for fuel cooled less than 5 years.

This information regarding the source term and shielding analysis is needed to determine compliance with 10 CFR 72.236 (d).

Response 5-8

(a) The statements in FSAR Section 5.2.2 are fundamentally correct. Cm-244 is the dominant contributor to the neutron source. At high burnups and low cooling times, Cf-252 becomes a relatively significant source of neutrons. The following table shows the percentage of total neutron source from various contributors for different burnup and cooling times.

Contributor	3 Years	10 Years	20 Years
45,000 MWD/MTU			
Cm-244	97.2%	97.3%	96.0%
Cf-252 spontaneous fission	0.4%	0.1%	0.0%
All alpha-n contributors except Cm-244	0.7%	1.0%	1.6%
All spontaneous fission contributors except Cm-244 and Cf-252	1.7%	1.6%	2.4%
75,000 MWD/MTU			
Cm-244	91.7%	95.9%	95.8%
Cf-252 spontaneous fission	6.0%	1.3%	0.2%
All alpha-n contributors except Cm-244	0.4%	0.5%	0.8%
All spontaneous fission contributors except Cm-244 and Cf-252	1.9%	2.3%	3.2%

The text in FSAR Section 5.2.2 has been modified to read:

> "^{244}Cm accounts for approximately 92-97% of the total number of neutrons produced. Alpha,n reactions in isotopes other than ^{244}Cm account for approximately 0.3-2% of the neutrons produced, while spontaneous fission in isotopes other than ^{244}Cm account for approximately 2-8% of the neutrons produced."

(b) There are no additional uncertainties associated with the generation of neutron source terms for cooling times less than 5 years. The physical phenomena are the same for all cooling times with a minor change in the concentration of the nuclides as discussed above.

Question 5-9

Provide the following information regarding minimum enrichments used in the source term analysis:

(a) Discuss and clarify the information used to determine the minimum enrichments and other power operating aspects for average burnups above 60 GWD/MTU.

Source term input parameters used for average burnups below 60 GWD/MTU are based on examination of industry data for actual spent fuel. It is not clear how much industry data is available regarding the minimum enrichments that will be used to generate high burnup fuel in the future.

(b) Clarify if the statement regarding dose rate impacts from "outlying assemblies" also apply to decay heat impacts.

(c) Clarify if the burnup values and equation coefficients in proposed Sections 2.4.1 and 2.4.2 of proposed Appendix B are valid for fuel with minimum enrichments below those specified in Table 5.2.24.

(d) Clarify how the user should consider minimum enrichments for outlying fuel assemblies, in conjunction with the new proposed TS 5.7. [see also RAI 10-3]

This information regarding the source term and shielding analysis is needed to determine compliance with 10 CFR 72.236 (d) and (f).

Response 5-9

(a) As the question notes, there is limited data in the high burnup range above 60 GWD/MTU. The minimum enrichments chosen in FSAR Table 5.2.24 were based on a review of historical burnup data and some plant specific burnup data, as well as projected burnups. The specific information can be found in the Holtec calculation package HI-2022847 which is being provided under separate cover. In an effort to be more accurate in the CoC, enrichment has been factored into the equation that represents burnup as a function of decay heat for the various cooling times. The CoC now provides an equation that requires users to calculate burnup limits as a function of decay heat <u>and</u> minimum enrichment[†]. As a result, enrichment-specific allowable burnup and cooling times will be established by the user. The shielding analysis in FSAR Chapter 5 continues to use the enrichments presented in FSAR Table 5.2.24, which are still considered to be bounding values, for the various burnup ranges. In order to accommodate the change in the burnup equation, a definition for minimum enrichment has also been added to FSAR Table 1.0.1 and the Definitions section of CoC Appendix B.

---

† This approach applies to ZR-clad fuel only. SS-clad fuel assemblies continue to have specific limits on burnup, decay heat, and cooling time specified in the CoC.

The operating parameters used for the source term calculations are appropriate for the allowable burnups beyond 60,000 MWD/MTU being requested in this LAR (65,000 MWD/MTU for BWR and 68,200 MWD/MTU for PWR – see Response 5-6). The burnups of fuel assemblies will rise to a practical limit in the neighborhood of 60,000 MWD/MTU while the major operating characteristics of plants will not change with the exception of power level, which may increase through power uprates. The source term analysis in Section 5.2 already accounts for the potential power uprates. Therefore, operating parameters used in the analysis remain appropriate.

(b) The statement in FSAR Chapter 5 regarding "outlying assemblies" in terms of enrichments did apply to both dose rate and decay heat impacts. It was felt that the enrichment range was sufficiently conservative for decay heat calculations that assemblies with enrichments below those used in the source term calculations would have decay heat estimates that would be only slightly off. However, in response to this RAI and in an effort to be more accurate, the CoC has been modified to include an equation that requires users to calculate allowable burnup as a function of decay heat and enrichment. The previous proposed CoC provided burnup versus cooling time tables for uniform storage and an equation relating burnup and decay heat for regionalized storage. These tables and equations have been replaced by a new equation which provides for calculation of maximum allowable fuel assembly burnup as a function of decay and enrichment for both uniform and regionalized fuel storage. As a result, there are no "outlying assemblies" in terms of the calculations used to derive the allowable burnups in the CoC.

(c) As stated in Part (b), the modified equations in the CoC provide for calculation of maximum allowable fuel assembly burnup as a function of decay heat and enrichment. The coefficients used in these equations were developed for enrichments ranging from 0.7 to 5.0 wt.% ^{235}U. Even though the lower limit of 0.7 wt.% ^{235}U was used, these equations are valid for the few assemblies that might exist with enrichments below 0.7 wt.% ^{235}U. This is because the curve fit is very well behaved in the enrichment range from 0.7 to 5.0 wt.% ^{235}U and, therefore, it is expected that the curve fit will remain accurate for enrichments below 0.7 wt.% ^{235}U. In addition, assemblies with enrichments below 0.7 wt.% ^{235}U are expected to have very small burnups and long cooling times.

(d) The proposed revised TS 5.7 (see Response 10-3) requires that the user calculate their site-specific dose limits consistent with their 10CFR72.212 evaluation. In performing these calculations, it is recommended that an enrichment, burnup and cooling time combination be used that produce bounding dose results. In this regard, the enrichment used in TS 5.7 analysis and the 10CFR72.212 evaluation do not become limitations for the fuel assemblies to be loaded. This is acceptable because as long as the dose rates are below the calculated TS 5.7 values, there is assurance that the 10CFR72.104 regulations will be met. FSAR Section 5.2 has been modified as a result of this portion of the RAI.

Question 5-10

Specify the decay heat of the bounding non-fuel hardware analyzed in Section 5.2.4.

This information regarding the source term and shielding analysis is needed to determine compliance with 10 CFR 72.236 (d) and (f).

Response 5-10

The decay heats calculated for the bounding non-fuel hardware in Section 5.2.4 are as follows.

Thimble plugs – 0.77 watts
BPRAs – 14.4 watts
CRAs – 8.25 watts for configuration 2 (fully removed) and 80.8 watts for configuration 1 (10% inserted)
APSRs – 4.72 watts for configuration 2 (fully removed), 46.2 watts for configuration 1 (10% inserted), and 178.9 watts for configuration 3 (fully inserted)

This information has been added to Section 5.2.4 of the FSAR.

Question 5-11

Specify how the heat source terms from the non-fuel hardware in Section 5.2.4 is applied in determining the burnups specified in Tables 2.4-1 through 2.4-3 for uniformed loading, and the coefficients in Tables 2.4-7 and 2.4-8 for regionalized loading in proposed Appendix B.

This information regarding the source term and shielding analysis is needed to determine compliance with 10 CFR 72.236 (d) and (f).

Response 5-11

The decay heat source from the non-fuel hardware was not used in determining the allowable burnups in Revision 1 of the FSAR and CoC. Likewise, the decay heat from non-fuel hardware is not used in this revision of the LAR in determining the uniform allowable burnups or the coefficients presented in the proposed CoC. Likewise, the coefficients for the equation representing burnup as a function of decay heat and enrichment in this revision of the LAR were calculated without consideration for the decay heat from non-fuel hardware. When a user calculates the allowable burnup, the decay heat inputs into the equation are chosen based on the uniform loading heat loads or the calculated regionalized loading heat loads. Non-fuel hardware decay heat is not a consideration when the user calculates the allowable burnups.

It is the responsibility of the user to demonstrate that the total decay heat emitted by the fuel assembly plus non-fuel hardware, if any, to be stored in the same fuel storage location is less than the allowable decay heat limit determined using the methodology in Section 2.4.1 or 2.4.2 of Appendix B to the CoC. This is acceptable because the user is required to demonstrate compliance with all requirements in the CoC including the decay heat limits. The text in FSAR Section 2.1.9 and in the proposed CoC has been modified to clarify that the user must add the decay heat from the fuel assembly and the non-fuel hardware when demonstrating compliance with the decay heat limits in the CoC.

Question 5-12

Provide the following information regarding the new proposed uranium loadings in Tables 2.1.3 and 2.1.4 of the FSAR:

(a) Justify the 2.0 and 1.5 percent loading deviations in Note 3 of the tables.

The revised tables appear to eliminate the current margins between allowable fuel loadings and the mass used for the assembly-specific analyses. It appears that this margin was considered in the original approval of the deviation specification.

(b) Identify any other assumptions or uncertainties in the currently approved FSAR, that rely on the uranium loading margin discussed above.

This information regarding the source term and shielding analysis is needed to determine compliance with 10 CFR 72.236 (d) and (f).

Response 5-12

(a) The 2.0 and 1.5 percent loading deviations listed in the notes in the CoC are maintained from previously approved revisions of the CoC. No change to these notes was requested in this LAR.

The RAI question correctly notes that different allowable burnup and cooling times are being requested for the different assembly classes. This approach reduces the margin in the allowable burnups by using assembly-specific uranium mass loadings rather than a bounding value from the design basis shielding fuel assembly. However, Holtec believes it is still justified to maintain the 2.0 and 1.5 percent loading deviations in the CoC because the uranium mass loadings in the CoC have been conservatively calculated and should be bounding in all but the fewest cases. In order to provide more conservatism in the current analysis, many of the uranium mass loadings have been increased in the CoC and correspondingly in FSAR Tables 5.2.25 and 5.2.26 (see Response 5-14), thereby reducing the allowable burnups. With the increase in the loadings, the likelihood of an assembly exceeding these values is deemed to be small. However, if an assembly does exceed these values there is ample margin in the various analyses in the SAR to accommodate the minor 2.0 and 1.5 deviations previously approved in the CoC.

(b) There are no other assumptions or uncertainties in the FSAR that rely on a uranium loading margin. All analysis in the FSAR are demonstrated to be bounding without relying upon margin between the uranium mass loading of a design basis assembly and that of another assembly.

Question 5-13

Discuss how the user should consider specific power assumptions for the PWR and BWR fuel assemblies, in conjunction with the new proposed TS 5.7

It is not clear if potential fuel assemblies that exceed the specific powers would be invalid for storage in accordance with the FSAR, and Section 2.4.1 and 2.4.2 of proposed Appendix B. [see also RAI 10-3]

This information regarding the source term and shielding analysis is needed to determine compliance with 10 CFR 72.236 (d) and (f).

Response 5-13

The revised TS 5.7 (see Response 10-3) states that the user must calculate site-specific dose rate limits consistent with their 10CFR72.212 evaluation. In performing these calculations, it is recommended that an enrichment, burnup and cooling time combination be used that produce bounding dose results. A user may choose to perform their site-specific analysis with a different specific power than is used in the FSAR, but this is not required. The specific powers used in Chapter 5 of the FSAR were chosen to be conservative as described in Section 5.2. Because proposed TS 5.7 requires a user to calculate site-specific dose rate limits to comply with the CoC, there is assurance that the site-specific analyses demonstrating compliance with 10CFR72.104 are bounding and any concern about the choice of specific power in the site specific analysis is alleviated.

With regard to Sections 2.4.1 and 2.4.2 of proposed Appendix B to the CoC, the user is required to demonstrate compliance with the allowable fuel assembly burnup, cooling time and decay heat limits. The user is not required to demonstrate that the specific power of their plant is less than the values used in the FSAR. As stated before, the specific powers were chosen to be conservative for both PWR and BWR fuel. This choice, in conjunction with other conservatisms discussed in FSAR Chapter 5, results in the conservative allowable burnup and cooling times determined in accordance with the methodology specified in Appendix B to the CoC. Since the user must demonstrate compliance with both the burnup and decay heat limits, there is assurance that all analyses in the FSAR bound the loaded contents.

Question 5-14

Clarify if each fuel assembly class specified in Table 5.2.25 and 5.2.26 is representative or bounding of the specific array classes noted in Section 2.4 of proposed Appendix B for both uniform and regionalized loadings.

Although uranium loading is typically the driving factor in source term strength, it is not clear if lattice variations are (or should be) considered for determining the more precise burnup parameters for each specific fuel class.

This information regarding the source term and shielding analysis is needed to determine compliance with 10 CFR 72.236 (d).

Response 5-14

FSAR Tables 5.2.25 and 5.2.26 are used to determine the bounding fuel assemblies used in the shielding analysis. These assemblies were used to determine the allowable burnup and cooling time tables and equation coefficients presented in the Revision 1 of this LAR. These assemblies were also used to determine the revised equation coefficients in this Revision 2 of the LAR. Separate source term calculations were performed for each fuel assembly in these tables to determine the allowable burnups and equation coefficients. By performing separate calculations, any potential lattice effects are properly accounted for. The fuel assemblies listed in these tables are also used to determine the allowable uranium mass loadings in Tables 2.1-2 and 2.1-3 of the proposed CoC. Each fuel assembly listed in FSAR Tables 5.2.25 and 5.2.26 is representative and bounding (for uranium mass loading) for the ZR-clad array/classes listed in the CoC. However, not all assemblies used to determine the parameters in the previous proposed CoC were represented in FSAR Tables 5.2.25 and 5.2.26. Therefore, in response to this RAI question, FSAR Tables 5.2.25 through 5.2.28 have been expanded to include all fuel assemblies used in determining the parameters in the proposed CoC. In addition, the assembly array/classes that correspond to these assemblies are noted in the tables.

Question 5-15

Clarify the reason for changing water rod dimensions of the 9x9 array listed in Table 5.2.26. Discuss the resulting change on the calculated source terms.

This information regarding the source term and shielding analysis is needed to determine compliance with 10 CFR 72.236 (d).

Response 5-15

The water rod dimensions were changed along with the number of fuel rods for the 9x9 fuel assembly in FSAR Table 5.2.26. As discussed in Response 5-14, the fuel assemblies listed in FSAR Tables 5.2.25 and 5.2.26 are bounding for the fuel assembly array/classes in the CoC. Consistent with this approach, the 9x9 fuel assembly in FSAR Table 5.2.26 was modified in this LAR to be consistent with the CoC assembly array/class 9x9F. FSAR Tables 5.2.25 and 5.2.26 have been further expanded to include additional assemblies as discussed in Response 5-14.

Question 5-16

Provide the following information regarding the uniform loading specifications referenced in Section 5.2.5.3 of the FSAR and Section 2.4.1 of proposed Appendix B. [see item 5-17]

(a) Provide the calculation package that provides the derivation of the burnup specifications equation and associated values used in proposed Appendix B of the CoC.

(b) Revise the FSAR, as appropriate, to provide a stand-alone summary of the derivation of these burnup values.

(c) Clarify whether each burnup point was independently calculated with the Section 5.2 methodology, or if some other estimation method was used.

(d) Clarify if the specific array classes (e.g., lattice effects and operating conditions) is considered in this methodology, or only changes in uranium loading for a single design basis assembly.

This information regarding the source term and shielding analysis is needed to determine compliance with 10 CFR 72.236 (d) and (f).

Response 5-16

(a) Holtec Report HI-2022847 is being provided under separate cover. This calculation package shows the derivation of the coefficients for the revised equation in the CoC which is proposed for use in determining allowable fuel assembly burnup as a function of decay heat and enrichment (see Response 5-9). The burnup versus cooling time tables in the CoC for uniform loading have been replaced by the equation relating burnup to decay heat and enrichment. This equation is also used for computing the allowable burnups for regionalized storage.

(b) FSAR Section 5.2.5.3 has been revised to describe the equation in the CoC that represents burnup as a function of decay heat and enrichment.

(c) In the previous revision of this LAR, the burnup values in the uniform loading tables were calculated using the linear equations relating burnup and decay heat which were provided in Section 2.4.2 of Appendix B to the proposed CoC. In this revision of the LAR, a single equation relating burnup, decay heat, and enrichment is used for determining the maximum allowable burnups for both uniform and regionalized storage.

(d) The specific array/classes defined in FSAR Chapter 6 and listed in FSAR Section 2.1 and the CoC were used to determine the burnup limits and equation coefficients for those array/classes. As a result, lattice geometry effects were properly accounted for.

The equation coefficients were not calculated for each and every array/class. Rather, some array/classes were combined. For example, a single set of coefficients represent the 8x8C, 8x8D, and 8x8E array/classes. The array/classes that were combined had similar physical characteristics (e.g. array size, number/type of water rods, pitch) and a bounding uranium mass loading was used for the combined array/classes. The only exception is the 17x17B and 17x17C array/classes which were analyzed separately. In this case, the resulting burnups for the 17x17B and 17x17C array/classes were so close in value that it was decided to use the coefficients that resulted in bounding values (i.e. lower burnups) for both array/classes and combine them.

Question 5-17

Provide the following information regarding Table 2.4.1 of proposed Appendix B: [see item 5-16]

(a) Specify the mass used to calculate the burnups for the 17x17 B/C fuel entry

(b) Clarify if the uranium masses used to calculate the burnups in Table 2.4-1 for the various classes is consistent with the masses specified in Table 2.1-2 of the FSAR.

It appears that the allowable burnup values (e.g., at 3 years cooling) for each class do not increase in the same order as the allowable uranium mass values decrease in Table 2.1-2 for each class. Clarify if the various array-specific, non-fuel hardware masses are employed in this analysis.

(c) Clarify if Note 2 for Table 2.4-1 for each specified burnup and cooling time already accounts for allowable non-fuel hardware.

(d) Clarify whether each user must re-verify if the total heat load meets the maximum decay heat load, and recalculate allowable fuel burnups for any non-fuel hardware loadings.

This information regarding the source term and shielding analysis is needed to determine compliance with 10 CFR 72.236 (d) and (f).

Response 5-17

NOTE: Proposed changes to CoC Appendix B, Section 2.4 have been completely modified and these responses are provided for historical context for the reviewer.

(a) As discussed in part (d) of Response 5-16, both the 17x17B and 17x17C array/classes were analyzed separately and the array/class that produced the bounding results was used in combining these array/classes when determining burnup limits. This array/class is 17x17C, which has the higher uranium mass loadings.

(b) The uranium mass loading used to calculate the burnups in Table 2.4-1 of CoC Appendix B in LAR Revision 1 were consistent with the uranium mass loadings specified in Tables 2.1-2 and 2.1-3 of Appendix B to the CoC. As noted in the RAI question, at three years cooling a comparison of the allowable burnups between some array/classes (e.g. 14x14B and 14x14C) indicates a behavior that is not consistent with uranium mass loading. This effect is due to the lattice effects and indicates the importance of including lattice effects in the calculations. Array-specific non-fuel hardware masses are not used in the analysis.

(c) Note 2 on Table 2.4-1 in the proposed CoC, Appendix B, meant that the user must sum the decay heat of the fuel assembly that they will be storing and the decay heat from the non-fuel hardware that will be stored with that fuel assembly, if any. This sum must then be compared against the decay heat limits in Table 2.4-1. The allowable burnup and cooling times were calculated without consideration for the potential decay heat from non-fuel hardware. This is acceptable because the user is required to demonstrate compliance with all requirements in the CoC including the decay heat limits.

(d) The user must demonstrate that each assembly meets the burnup and cooling time limits. These limits are calculated as outlined in Section 2.4 of the proposed CoC without consideration for decay heat from non-fuel hardware. In addition, the user must demonstrate that the total assembly decay heat including non-fuel hardware (see response to item (c)) is less than the allowable value. Allowable burnups for the fuel assembly are not re-calculated based on the presence of non-fuel hardware.

Question 5-18

Provide the following information regarding the burnup equations referenced in Section 5.2.5.3 of the FSAR and Section 2.4.1 of proposed Appendix B.

(a) Provide the calculation package that provides the derivation of the burnup equation and associated values used in proposed Appendix B of the CoC.

(b) Revise the FSAR, as appropriate, to provide a stand-alone summary of the methodology used to derive this equation.

(c) Clarify if the specific array classes (e.g., lattice effects and operating conditions) is considered in this methodology, or only changes in uranium loading for a single design basis assembly.

(d) Justify the increment value of 2,500 MWD/MTU in deriving the equation.

(e) Clarify how the method accounts for non-linear production of some radionuclides during burnup.

(f) Specify the uncertainties associated with this methodology, in contrast to a direct verification of thermal decay heats and associated burnup with the SAS2H/ORIGEN-S depletion codes.

(g) Specify the precision of the input heat value (e.g., 1.666 MW) and the precision of calculated burnup values that the user should use for application of this equation (e.g., 45,200 or 45,249 MWD/MTU).

It is not clear if the ORIGEN-S code and the Holtec methodology treats values and computations at the same precision (e.g., significant figures) suggested by this equation and the associated coefficients.

(h) Discuss the reason for the 20 GWD/MTU criterion and why burnups below this value are unacceptable.

(i) Clarify the statement that "a fuel assembly with an actual burnup less than 20,000 MWD/MTU may be stored, but it must have the longer cooling time."

This information regarding the source term and shielding analysis is needed to determine compliance with 10 CFR 72.236 (d) and (f).

Response 5-18

(a) This question is identical to Question 5-16(a). Please see Response 5-16 (a).

(b) This question is identical to Question 5-16(b). Please see Response 5-16 (b).

(c) This question is identical to Question 5-16(d). Please see Response 5-16 (d).

(d) The choice of 2,500 MWD/MTU as the burnup increment in determining the coefficients for the equations was based on the behavior of the burnup versus decay heat curve. RAI Figure

5-18.1 (located at the end of this document) shows the burnup versus decay heat curve for two enrichments at a cooling time of 20 years. A 2,500 MWD/MTU increment was used in generating this figure. Based on the slowly changing slope of these curves it is evident that there is little to be gained from using a smaller increment in burnup. At cooling times below 20 years, the burnup versus decay heat curves become increasingly more linear providing further justification for the 2,500 MWD/MTU increment.

(e) The method of generating the equations properly accounts for non-linear production of radionuclides by explicitly performing SAS2H and ORIGEN-S calculations for each and every data point used to determine the equation coefficients.

(f) The only uncertainties associated with this methodology have been previously discussed in Response 5-6. In this revision of the proposed CoC, SAS2H and ORIGEN-S calculations have been performed for multiple enrichments and burnups in order to determine the coefficients for the equation relating burnup, decay heat and enrichment. The coefficients were calculated specifically for each cooling time.

(g) The equation coefficients were determined using all significant digits in the ORIGEN-S output. The curves were adjusted so that all burnup values were reproduced or bounded by the results from the equations.

The input decay heat value to be used in the burnup equations are taken directly from Table 2.4-1 of Appendix B of the proposed CoC (for uniform loading) or calculated from the equations in Section 2.4.2 of Appendix B of the proposed CoC (for regionalized loading). It is expected that the user may automate the process of calculating burnups from decay heats and enrichment calculated using the equations in Section 2.4.2 of the CoC. Therefore, there is no specification on the number of significant digits used for the decay heat value. For ease of use, the CoC has been modified to specify that the calculated burnups should be rounded down to the nearest integer.

(h) The 20 GWD/MTU criterion was specified because the previous curve fits were performed over a burnup range from 20,000 MWD/MTU to 70,000 (BWR) or 75,000 MWD/MTU (PWR). It was felt that it would not be appropriate to use the linear fits below 20,000 MWD/MTU.

(i) With a lower limit of 20,000 MWD/MTU permitted to be calculated, an instance could arise for short cooling times (e.g., three years) where the calculated burnup from the equation was less than 20,000 MWD/MTU. Since calculating a burnup less than 20,000 MWD/MTU was not permitted, fuel storage at that low cooling time (e.g. three years) was not permitted. As a result fuel assemblies must meet the burnup requirements for the next higher cooling time (e.g., three years). This was illustrated in the example provided in FSAR Chapter 12 of the previous revision of this LAR. Holtec understands that the wording in the CoC was somewhat unclear. The current revision of the proposed CoC and FSAR Section 2.1.9 (information re-located from Chapter 12) have been clarified and a reference to the example in Chapter 12, which executes the methodology, is now provided in the CoC.

Question 5-19

Provide the following information regarding Section 2.4.2.5 of proposed Appendix B:

(a) Justify the request for linear interpolation between points.

(b) Provide a method, and practical example for this proposed interpolation. Clarify the expected error in estimated decay heats with this approach.

It is not clear what "points" (e.g., burnup, cooling time, heat load) can be interpolated.

(c) Specify the user need for interpolation of these values in industry applications.

This information regarding the source term and shielding analysis is needed to determine compliance with 10 CFR 72.236 (d) and (f).

Response 5-19

Linear interpolation between points has been approved in all previous revisions of the CoC. This LAR does not request a change to the linear interpolation option.

(a) The user is permitted to interpolate the burnup value between adjacent cooling times. RAI Figure 5-19.1 (located at the end of this document) shows a graph of burnup versus cooling time for a constant decay heat. Based on the shape of the curve it is easily understood that performing linear interpolation between cooling time points to determine the burnup will produce an accurate or slightly conservative (underestimated) burnup. Therefore, linear interpolation is acceptable.

(b) An example has been added to FSAR Section 12.2.10. The user is only permitted to perform interpolation for burnups between cooling times that were determined for the same enrichment and decay heat values.

(c) To date, our users have not had a need for interpolation. However, as utilities begin to store more and more fuel, the option for linear interpolation may be important in choosing the assemblies to be loaded so as not to unnecessarily impact a loading schedule. The option to interpolate may also become important to a decommissioning plant in order to prevent extended delays (up to a year) in their decommissioning plans.

Question 5-20

Discuss how the cask user applies the non-fuel hardware decay heat, as discussed in proposed Section 2.4.2.6 of proposed Appendix B.

It is not clear how non-fuel hardware decay heat should be considered in equations 2.4.1 through 2.4.3 in proposed Appendix B. [see also RAI 5-17(d)]

This information regarding the source term and shielding analysis is needed to determine compliance with 10 CFR 72.236 (d) and (f).

Response 5-20

Section 2.4.2.6 of the proposed CoC meant that the user must sum the decay heat of the fuel assembly that they will be storing and the decay heat from the non-fuel hardware that may be stored with that fuel assembly. This sum must then be compared against the decay heat limits calculated in Sections 2.4.2.1 and 2.4.2.3 of the proposed CoC. The allowable burnup and cooling times calculated in Sections 2.4.2.2 and 2.4.2.4 are calculated without consideration for the potential decay heat from non-fuel hardware. The decay heat inputs for Sections 2.4.2.2 and 2.4.2.4 come directly from Sections 2.4.2.1 and 2.4.2.3. This is acceptable because the user is required to demonstrate compliance with all requirements in the CoC including the decay heat limits.

Section 2.4.2 has been extensively revised as a result of changes in the thermal analysis. The references to sections above may no longer be valid in this revision of the proposed CoC. However, the intent as stated above is still correct and the CoC has been modified to clarify the users requirements.

Question 5-21

Provide the following information regarding the specific fuel array classes listed in Table 2.1-1 and Section 2.4 of proposed Appendix B:

(a) Clarify whether array classes 14x14D/E and 15x15G can be co-mingled with the other PWR array classes specified in Section 2.4, with respect to the source term methods and shielding analysis used to develop these tables.

(b) Provide the same information for the specific BWR array classes specified in Table 2.1-1 and the other BWR array classes specified in Section 2.4.

This information regarding the source term and shielding analysis is needed to determine compliance with 10 CFR 72.236 (d).

Response 5-21

(a) Co-mingling of stainless steel-clad (array/classes 14x14D/E and 15x15G) and ZR-clad fuel is permitted in the CoC. There is already a restriction imposed by item 2.1.1.b in Appendix B to the CoC which requires that the ZR-clad fuel co-mingled with stainless steel-clad fuel must meet the decay heat limits of the stainless steel clad fuel. This restriction remains in the proposed CoC and the result would be that a user would calculate, using the equations provided in the proposed CoC, more restrictive burnups by using the stainless steel clad fuel decay heat limits. The limitation on co-mingling in the CoC is extracted from the thermal analysis described in FSAR Chapter 4. The shielding analysis and the calculation of the burnup versus decay heat and enrichment equations do not result in any co-mingling limitations.

(b) The limitation in item 2.1.1.b in Appendix B to the CoC is applicable to BWR fuel as well as PWR fuel. There is also a similar limitation imposed by item 2.1.1.d in Appendix B to the CoC for non-standard ZR-clad fuel. These CoC requirements place restrictions on, but do

not prohibit co-mingling of standard ZR-clad fuel with either array classes 6x6A,B,C, 7x7A, 8x8A, or stainless steel clad fuel.

Question 5-22

Specify whether calculated dose rates in Section 5.4 are determined with source term dose response functions (i.e. source strength to dose rate conversion factors), or with individual forward calculations with Monte Carlo N-Particle (MCNP) Transport Code. Provide the dose response functions, as appropriate, and in accordance with the methodology proposed in TS 5.7. [see also RAI 10-3]

This information regarding the source term and shielding analysis is needed to determine compliance with 10 CFR 72.236 (d).

Response 5-22

Forward MCNP calculations were performed to determine the dose rate per starting particle for each neutron and gamma group for the fuel, and for each axial location in the end fittings. This dose rate per starting particle was calculated at multiple locations around the overpack. The final dose rates were calculated by multiplying the dose per starting particle for each group or axial location by the source strength in that group or axial location and summing the resulting dose rates for all groups. Therefore, there are no dose response functions used in the calculations of the dose rates. Section 5.4 of the FSAR has been modified to include this description.

Chapter 6 - Criticality Evaluation

Question 6-1

Justify the general conclusion that maximum pellet diameter maximizes k_{eff}.

The data in Table 6.4.12 indicates that k_{eff} increases with decreasing pellet diameter in the MPC-24 type canister. The response should include the location of the detailed data summarized in Table 6.4.12. Also, Figure 6.4.14 shows a maximum reactivity for the minimum pellet outside diameter (OD) for the points in the peak of the plot.

This information is needed to show compliance with 10 CFR 72.124(a) and 72.236(c).

Response 6-1

In the response to this RAI, a distinction must be made between the general conclusion that the maximum pellet diameter maximizes k_{eff} for intact fuel, as discussed in FSAR Section 6.2, and the effect of the pellet diameter in the damaged fuel and fuel debris model, as discussed in FSAR Section 6.4. This distinction is necessary since the pellet diameter plays a different role in intact fuel and damaged fuel/fuel debris, and since the pellet diameter supports different conclusions in intact fuel as compared to damaged fuel/fuel debris.

Pellet Diameter in Intact Fuel

The use of maximum pellet diameter as a fuel selection criterion was included, with many other parameters, in the original licensing bases for the two Holtec CoCs under 10 CFR 72 and one under 10 CFR 71 (for example, see the HI-STORM Part 72 CoC, Appendix B, Tables 2.1-2 and 2.1-3). This was found acceptable by the NRC in all cases (refer to the HI-STORM 10 CFR 72 SER, Rev. 0, Section 6.3). All three CoCs require that numerous fuel assembly physical parameters be verified in selecting fuel for loading into the MPC to ensure the criticality analyses are preserved. In combination, compliance with all of the fuel assembly parameters provides reasonable assurance of criticality control with significant margin, as described in FSAR Chapter 6.

Over 50 Holtec MPCs have been loaded, welded, and placed into service at ISFSI pads using maximum pellet diameter as one of the criteria verified. To change this criterion at this point (to add a minimum diameter, for example) could potentially invalidate past fuel selection and verification activities for MPCs already loaded and in service. Absent a significant safety issue, this would not be appropriate. Therefore, we have not altered the maximum pellet diameter fuel selection criterion in the CoC nor added any other criteria. Rather, we are providing the discussion below to qualitatively justify why maximum pellet diameter, as previously licensed, along with other requirements for fuel selection and the realities of fuel fabrication provides sufficient assurance of criticality control.

The intention of the discussion in FSAR Section 6.2.1, together with the corresponding calculations, is to show that the *combination* of the parameters listed in the section is bounding. It is recognized that decreasing the fuel pellet diameter without varying any other parameter (i.e., fuel cladding ID) can result in an increase of the calculated reactivity if the pellet-to-clad gap is flooded. If it is not flooded, the reactivity decreases. However, it is important to recognize

that in actual fuel assemblies the pellet diameter does not vary independently from the other parameters.

Specifically, there is a strong link between the pellet diameter and the clad ID, since the difference between these values, i.e. the pellet-to-clad gap size, differs only slightly among assembly types. Reducing the pellet diameter while maintaining the clad ID would therefore increase the pellet-to-clad gap size beyond what is found in actual fuel assemblies and is, therefore, not considered a credible design condition. The choice of the maximum pellet diameter, however, is consistent with the choice of the maximum clad ID and recognizes the very limited variation in pellet-to-clad gap found in actual fuel assemblies. This choice of fuel parameters is supported by the results for one class of fuel in the MPC-68, MPC-24 and MPC-32 (FSAR Tables 6.2.3, 6.2.4 and 6.2.5, respectively), and by the large set of calculations summarized in FSAR Tables 6.2.6 through 6.2.45, which were performed for all PWR and BWR assembly classes and numerous variations of assembly dimensions.

In summary, the choice of the maximum pellet diameter for intact fuel assemblies, in conjunction with the other bounding parameter assumptions, is suitably conservative and consistent with actual fuel assembly construction, and the parameters are supported by a significant number of calculations.

Pellet Diameter in Damaged Fuel and Fuel Debris

In the models developed to conservatively represent damaged fuel and fuel debris, both the diameter and the array size of the bare fuel rods are varied in order to determine the optimum moderation condition. The fuel rod diameters for the three cases listed in FSAR Table 6.4.12 differ significantly from each other (minimum: 0.3088 inches from assembly array/class 17x17A, typical: 0.3622 inches from assembly array/class 15x15H, maximum 0.3835 inches from assembly array/class 14x14D, see Holtec Report HI-951321, Attachment F, Page F-1-109 through F-1-111). Therefore, the array sizes corresponding to the optimum moderation are different for the different pellet OD values (14x14 array for maximum pellet OD, 15x15 array for typical pellet OD, and 18x18 array for minimum pellet OD, see Holtec Report HI-2012771, Appendix D). The cases in FSAR Table 6.4.12 therefore differ in both the pellet OD and the array size. In order to determine whether the values shown in FSAR Table 6.4.12, and the data shown in FSAR Figure 6.4.14 represent any significant trend regarding the pellet OD, the following findings need to be considered:

- The difference in reactivity between the case with the maximum and minimum pellet OD is 0.0014 delta-k. Given the standard deviation of these calculations of about 0.0008 delta-k (see Holtec Report HI-2012771, Appendix D), this difference represents less than two standard deviations and is therefore not considered statistically significant.

- The minimum and maximum pellet OD used in the analyses differ significantly (by more than 20%). In conjunction with the small reactivity effect of less than two standard deviations, the overall effect of the pellet OD on the reactivity of the damaged fuel and fuel debris calculations can only be described as insignificant.

- The same applies to the results in FSAR Figure 6.4.14, where the maximum values differ by less than two standard deviations. In addition, there is no clear trend in the data, since the lowest value corresponds to the typical pellet OD, not to the maximum pellet OD.

- The results presented for PWR fuel in the MPC-32 (FSAR Table 6.4.13) or for generic BWR fuel in the MPC-68 (FSAR Figure 6.4.13) do not indicate any potential trends.

- Even if a trend would be determined here, this would be applicable only to the damaged fuel and fuel debris modeling where an optimum moderation condition is determined by varying both the pellet OD and the array size. This would not be applicable to intact fuel, where the intent is to determine the bounding parameters for a given assembly type, i.e. a fixed array size.

In summary, examination of the results show that there is only an insignificant effect, if any, of the pellet OD on the reactivity of the model with damaged fuel and fuel debris, and that any conclusions from this model are not applicable to the bounding fuel parameters used for intact fuel.

There are no changes to FSAR Chapter 6 as a result of this RAI response.

Question 6-2

Justify the statement that k_{eff} decreases for all cases except the MPC-32 when the fuel assemblies are moved toward the center of the basket.

The data in Appendix I of calculation HI-2012771, "Reactivity Effect of Eccentric Fuel Positioning," shows several cases that do not support the statement in Section 6.4.2. (see also RAI 6-5)

This information is needed to show compliance with 10 CFR 72.124(a) and 72.236(c).

Response 6-2

Please see Response 6-5.

Question 6-3

Provide the supporting data for the statement that missing fuel rods in an assembly result in only a sight increase in reactivity in the MPC-24E.

This data is used to support a similar conclusion for the MPC-32. Table 6.4.5 shows increases in k_{eff} that are greater than 2% for some missing rod configurations.

This information is needed to show compliance with 10 CFR 72.124(a) and 72.236(c).

Response 6-3

The important aspect of the MPC-24E and MPC-32 loaded with damaged fuel and fuel debris is that these baskets contain only a small number of locations for DFCs (four for the MPC-24 and eight for the MPC-32). Further, all DFCs are located on the periphery of the basket. These designs were chosen to minimize the impact of the damaged fuel and fuel debris configurations on the reactivity of the basket. The same applies to the MPC-68 with 16 DFCs for generic BWR damaged fuel and fuel debris (i.e., excluding Dresden Unit 1 and Humboldt Bay), with results

shown in FSAR Table 6.4.8. The results in FSAR Table 6.4.5, however, are for a bounding MPC-68 configuration not permitted by the CoC, where all 68 basket positions are occupied by DFCs. For this model, the reactivity effect of any variations in the damaged fuel model is therefore much larger than for the models with a limited number of DFCs on the periphery of the basket. Consistent with this expectation, the calculations for the MPC-24E/EF with four DFCs and the MPC-68 with 16 DFCs only show small variations in reactivity, about 0.002 delta-k, when the damaged fuel assembly is modeled as an intact assembly with missing rods (MPC-24: four cases, with between eight and 16 missing rods; MPC-68: seven cases, with between four and 32 missing rods (see Holtec Report HI-951321, Attachment F, Appendix F-1, Pages F-1-80 and F-1-85). Since the modeling approach using bare fuel rods bounds these conditions by a large margin, no conditions with missing rods were evaluated in the MPC-32, as discussed in FSAR Section 6.4.4.2.6.

There are no changes to FSAR Chapter 6 as a result of this RAI response.

Question 6-4

Justify the statement that the Boral™ and Metamic® poisons are "...identical from a criticality perspective."

The data in Table 6.4.15 show the MPC-24 type basket (with flux traps) is more reactive with Metamic® versus Boral™, with one exception, while the MPC-68 and MPC-32 (without flux traps) are less reactive. Averaging the effect over all basket types is misleading when the trends by basket type are so consistent. The analysis methodology described in the FSAR should include an assessment of both Boral™ and Metamic®, at least for the MPC-24 type basket.

This information is needed to show compliance with 10 CFR 72.124(a) and 72.236(c).

Response 6-4

This apparent trend in the comparison between Boral and METAMIC® was noted when performing the calculations. Therefore, a second, statistically independent set of calculations was generated for METAMIC®. This second set shows generally different delta-k values between Boral and METAMIC®, no apparent trend between different baskets, and the same low average reactivity difference. It is therefore concluded that the two materials are equivalent from a criticality perspective. Both sets of comparisons, and the corresponding discussion, are documented in Holtec Report HI-2012771, Appendix E. FSAR Section 6.4.11 has been expanded to discuss these additional calculations.

Question 6-5

Justify the general conclusion that eccentric positioning of the fuel assemblies is negligible.

The data in Appendix I of calculation HI-2012771 "Reactivity Effect of Eccentric Fuel Positioning," show an increase in k_{eff} for nine of the eleven cases reported when the fuel assemblies are positioned toward the center of the MPC. An increase in k_{eff} as high as 0.39% is reported and is almost twice the maximum decrease reported for this fuel movement. Eccentric effects should be included in the analysis methodology described in the FSAR.

This information is needed to show compliance with 10 CFR 72.124(a) and 72.236(c).

Response 6-5

The original, approved licensing basis for criticality analysis did not include a stipulation that all assemblies must be moved toward the center of the basket in the criticality models. Absent a significant safety issue, new assemblies, modifications to existing assemblies, and new MPC models should be evaluated using the same, previously approved licensing basis. The assemblies were centered in their fuel storage cells as is clearly stated in the FSAR. This approach was previously found to be acceptable by the NRC by virtue of the issuance of the CoC and associated NRC safety evaluation report, notwithstanding existing review guidance at the time of licensing that suggested eccentric positioning should be considered. Despite having been previously approved and no significant safety issue identified, this RAI requests that Holtec implement a new staff position into the HI-STORM licensing basis.

As discussed with the SFPO staff, a scenario where all fuel assemblies are assumed to be moved toward the center of the MPC basket is not credible, based on the number of assemblies and the random nature in which the assemblies locate themselves as the cask is moved and handled. Even if the probability for a single assembly placed in the corner of the fuel cell toward the basket center would be 1/5 (i.e. assuming only the center and four corner positions in each cell, all with equal probability), then the probability that all assemblies would be located toward the center would be $(1/5)^{24}$ or approximately 10^{-17} for the MPC-24, $(1/5)^{32}$ or approximately 10^{-23} for the MPC-32, and $(1/5)^{68}$ or approximately 10^{-48} for the MPC-68.

Despite this lack of credibility, in order to keep the licensing process moving forward, we have re-analyzed criticality cases for all new or changed conditions to address this non-mechanistic scenario and the results are reported in Proposed Revision 2B of the FSAR. This includes the MPC-32 calculations with intact assemblies and reduced soluble boron levels compared with the currently approved values (i.e. all 14x14 array/classes, 15x15 A, B, C and G, and 16x16A), the MPC-32 cases with intact fuel and damaged fuel/fuel debris, and the MPC-24E/EF with intact fuel and damaged fuel of 5.0 wt% ^{235}U. While we understand that analyzing all of the conditions with assemblies moved toward the center of the basket provides a bounding case, we believe that the previous licensing basis was sufficiently conservative. Further, this unnecessary additional amount of conservatism added to the licensing basis effectively eliminates any maneuverability in adding or modifying fuel assembly types or fuel characteristics that may increase reactivity to reflect actual fuel requiring storage in the future.

Question 6-6

Show that the poison plates in the MPC-32 will not be damaged during insertion of a fuel assembly or damaged fuel canister (DFC).

The poison plates are on the inside of the fuel cells and have a fairly thin cover sheathing. Also, the clearances are very small particularly when considering the tolerances on the basket cell dimensions and the size of the DFC.

This information is needed to show compliance with 10 CFR 72.124(a) and 72.236(c).

Response 6-6

No specific steps are taken to preclude interaction between a fuel assembly and the fuel basket structure during fuel loading. The manufacturing of the Holtec MPC baskets is a fixture-driven process whereby the dimensions of the fuel cells are controlled throughout the basket welding process. The fixtures act to suppress weld-induced distortion and provide assurance that each fuel storage cell and the basket assemblage meet the required tolerances. Each fuel storage location in each MPC is tested at the fabrication shop with a "go/no-go" gauge suitably sized to ensure all fuel assemblies and/or damaged fuel containers will fit in their designated locations when used at the power plant. Any significant "hang-ups" with the go/no-go gauge will cause the fuel storage cell to fail the test criterion, requiring appropriate remedial actions to be taken. Over 50 MPCs (representing over 3000 fuel assemblies) have been loaded with BWR and PWR fuel, including several damaged fuel containers, with no reported instances of fuel interference with the inner surfaces of the fuel cells. In addition, Holtec has delivered and installed tens of thousands of fuel storage cells with similar cross-sectional dimensions, neutron absorber panels, and sheathing in spent fuel pools. The neutron absorber and sheathing have performed without exhibiting any failure or malfunction in any fuel loading at any site.

Chapter 7 - Confinement Evaluation

NOTE: As part of this RAI response, Holtec is proposing to adopt the provisions of NRC Interim Staff Guidance (ISG) 18, which was published after the NRC issued this RAI. If certain criteria are met, then ISG-18 sanctions the elimination of confinement analyses and field leakage testing of the MPC closure welds. The elimination of the requirement to perform confinement analyses is based on the premise that there is no credible mechanism for leakage from storage systems whose confinement boundary is designed, analyzed, qualified, and manufactured to meet all applicable structural criteria applicable to welded austenitic stainless steel canisters. Because the Holtec MPCs meet all of the ISG-18 criteria, they are eligible to be designated as completely leak tight. Therefore, the Chapter 7 RAIs are no longer applicable and the response to Question 7-1 is directed toward the adoption of ISG-18. The remaining responses to the Chapter 7 RAIs simply refer to Response 7-1.

Question 7-1

Clarify the discrepancy between Sections 7.2.3 and 7.2.6 regarding radionuclides available for release.

Section 7.2.3 states that 2.5% and 11.5% of the total inventory is available for release under normal and off-normal conditions, respectively, yet Section 7.2.6 states that 1% and 10% of the total inventory is available for release under normal and off-normal conditions, respectively.

This information is required to assure compliance with 10 CFR 72.11 and 72.236(d).

Response 7-1

The NRC's Interim Staff Guidance (ISG) 18 sanctions the elimination of confinement analyses for dry spent fuel storage systems for which a manufactured welded austenitic stainless steel MPC meets the ISG-18 criteria that support the elimination of leakage from such a canister from the licensing basis. In particular, the in-shop and in-field welds are engineered to produce the highest integrity joints attainable for the specific type of joint and the non-destructive examinations are configured to ensure a homogeneous and isotropic weld mass. The welding procedure selected to make the enclosure vessel (confinement boundary) weld and their supporting procedure qualifications shall likewise be subject to review by Holtec to ensure that all explicit and implicit commitments with respect to weld integrity (such as fracture resistance documented in Holtec Position Paper DS-213, "Acceptable Flaw Size in MPC Lid-to-Shell Weld") are fulfilled without exception. Section 7.1 of the HI-STORM FSAR has been modified to justify the application of ISG-18 to the Holtec MPC design and to justify the elimination of all references to leakage from the confinement boundary and confinement leakage dose analyses from the FSAR (Section 7.2, 7.3, 11.1, and 11.2). Appropriate verbiage has been added to the FSAR to ensure that all safeguards required to comply with the letter and spirit of ISG-18 and ISG-15 requirements are articulated. FSAR Sections 7.2 and 7.3 have been reduced in size to one paragraph each and Appendix 7.A has been deleted in its entirety. Other portions of the FSAR have been revised to conform with this change, as required, to eliminate reference to helium leakage testing of field welds and confinement boundary leakage rates.

Question 7-2

Justify applying gravitational settling as the only effect reducing the amount of fines, volatiles and crud within the confinement boundary. Provide justification for neglecting other deposition mechanisms, such as Brownian motion and thermophoresis. Revise the FSAR appropriately.

The evaluation provided in SMSAB-00-03, "Best Estimate Offsite Dose from Dry Storage Cask Leakage," was developed by staff specifically for the Safety Evaluation Report for the Private Fuel Storage 10 CFR Part 72 site specific license application. SMSAB-00-03 has not been evaluated for its applicability to a general license application. For example, SMSAB-00-03 does not discuss the range of applicability for using gravitational settling to reduce the amount of fines, volatiles and crud within the confinement boundary. The confinement analysis provided in Chapter 7 is a deviation from staff guidance provided in ISG-5, Confinement Evaluation. Alternatives to staff guidance must be described and justified.

This information is required to assure compliance with 10 CFR 72.236(d).

Response 7-2

This question is no longer applicable to the Holtec HI-STORM 100 System design. Please see Response 7-1.

Question 7-3

Justify neglecting effects that could counteract gravitational settling, such as the "thermosiphon" effect described in Chapter 4 and the cavity "de-pressurization" effect should a leak occur. Provide an estimation of the gas velocities within the cask cavity due to both of these effects. Revise the FSAR appropriately.

The "thermosiphon" effect appears that it could maintain a suspension of fines within the cask cavity. In addition, canister de-pressurization following a leak appears that it could result in a lifting of previously settled fines. SMSAB-00-03 does not discuss effects that may counteract gravitational settling. The confinement analysis provided in Chapter 7 is a deviation from staff guidance provided in ISG-5. Alternatives to the staff guidance must be described and justified.

This information is required to assure compliance with 10 CFR 72.236(d).

Response 7-3

This question is no longer applicable to the Holtec HI-STORM 100 System design. Please see Response 7-1.

Question 7-4

Provide justification that the aerosol particle distribution is independent of spent fuel burnup parameters.

The aerosol particle distribution in SMSAB-00-03 is based on experimental data regarding spent fuel fines from fuel with total burnup less than 40,000 MWD/MTU. Chapter 7 does not

demonstrate that the aerosol particle distribution is appropriate for spent fuel with burnups up to 75,000 MWD/MTU, nor does it demonstrate that the aerosol particle distribution of 1-4 μm is bounding for crud. The confinement analysis provided in Chapter 7 is a deviation from staff guidance provided in ISG-5. Alternatives to the staff guidance must be described and justified.

This information is required to assure compliance with 10 CFR 72.236(d).

Response 7-4

This question is no longer applicable to the Holtec HI-STORM 100 System design. Please see Response 7-1.

Question 7-5

Justify using 11.0 g/cm^3 for the upper bound value on aerosol density.

The density for non-irradiated fuel is typically 10.5 g/cc (10.96 g/cc theoretical). Given the unknown density of irradiated spent fuel, use of a conservative value for aerosol density would be more appropriate. The confinement analysis provided in Chapter 7 is a deviation from staff guidance provided in ISG-5. Alternatives to the staff guidance must be described and justified.

This information is required to assure compliance with 10 CFR 72.236(d).

Response 7-5

This question is no longer applicable to the Holtec HI-STORM 100 System design. Please see Response 7-1.

Question 7-6

Revise the FSAR to provide the calculation of the first-order rate constant for aerosol deposition, λ (lambda), discussed in Section 7.2.7.2.1.

Besides being based on parameters such as the particle density, the dynamic shape factor and particle diameter, λ (lambda) is based on factors such as the temperature and pressure of the gas which determines the viscosity and density of the gas, which in turn affects each of the aerosol deposition processes. According to Chapter 7, lambda is taken directly from SMSAB-00-03. SMSAB-00-03 is based on conditions for spent fuel with burnups up to 40,000 MWD/MTU. Chapter 7 of the FSAR does not demonstrate that lambda has been evaluated for canister conditions with spent fuel burnups up to 75,000 MWD/MTU. The confinement analysis provided in Chapter 7 is a deviation from staff guidance provided in ISG-5. Alternatives to the staff guidance must be described and justified.

This information is required to assure compliance with 10 CFR 72.236(d).

Response 7-6

This question is no longer applicable to the Holtec HI-STORM 100 System design. Please see Response 7-1.

Question 7-7

Justify using the lower bound value of λ (lambda) rather than the upper bound value.

Section 7.2.7.2.1 of the FSAR states that the lowest value was selected to ensure conservatism, yet the analysis presented in SMSAB-00-003 demonstrates that the lowest value results in the lowest predicted off-site dose. Uncertainties in the value of lambda should be accounted for in the analyses. The confinement analysis provided in Chapter 7 is a deviation from staff guidance provided in ISG-5. Alternatives to the staff guidance must be described and justified.

This information is required to assure compliance with 10 CFR 72.236(d).

Response 7-7

This question is no longer applicable to the Holtec HI-STORM 100 System design. Please see Response 7-1.

Question 7-8

Revise Chapter 7 to include the calculation of the fraction of volatiles that are subjected to gravitational settling.

The fraction of volatiles that are subjected to gravitational settling is based on the methodology of SMSAB-00-03 according to Section 7.2.7.2.2 of the FSAR. The evaluation provided in SMSAB-00-03 was developed by staff for the Safety Evaluation Report for the Private Fuel Storage 10 CFR Part 72 site specific license application. SMSAB-00-03 does not claim applicability to a general license application. SMSAB-00-03 is based on conditions for spent fuel with burnups up to 40,000 MWD/MTU. Chapter 7 does not demonstrate that this fraction has been evaluated for canister conditions with spent fuel burnups up to 75,000 MWD/MTU. The confinement analysis provided in Chapter 7 is a deviation from staff guidance provided in ISG-5. Alternatives to the staff guidance must be described and justified.
This information is required to assure compliance with 10 CFR 72.236(d).

Response 7-8

This question is no longer applicable to the Holtec HI-STORM 100 System design. Please see Response 7-1.

Question 7-9

Justify neglecting the off-site dose from pathways other than air and immersion.

The methodology of ISG-5 has been considered sufficiently conservative such that doses from other pathways could be neglected. Alternatives to the staff guidance must be clearly described and justified.

This information is required to assure compliance with 10 CFR 72.236(d).

Response 7-9

This question is no longer applicable to the Holtec HI-STORM 100 System design. Please see Response 7-1.

Chapter 8 - Operating Procedures

Question 8-1

Provide information that demonstrates that radiolytic disassociation of nitrogen would not result in the creation of adverse chemicals, specifically acids, that would affect the cask or contents, particularly during the storage period.

The FSAR specifies that either helium or nitrogen may be used to displace water during the cask draining process.

This information is required to assure compliance with 10 CFR 72.236(l).

Response 8-1

The optional use of nitrogen to displace water during cask draining operations was part of the original licensing basis for the HI-STORM 100 System and has not been proposed to be changed in this amendment request. This process, known as "blowdown" of the MPC, would be used as a precursor to vacuum drying of the canister. Nitrogen blowdown will not be performed if the FHD process (in lieu of vacuum drying) is used. Use of nitrogen prior to use of the Forced Helium Dehydrator (FHD) for drying would not be appropriate as the system is not designed to be used with nitrogen and would need to be purged or vacuumed prior to FHD operations. The use of nitrogen prior to vacuum drying would not give sufficient opportunity for the formation of deleterious amounts of acids in the MPC.

Research has shown that the formation of acids due to the radiolysis of moist air, (or, in this case, nitrogen), results in very low concentrations for high radiation doses. As the time between the water blow-down using nitrogen or helium and the beginning of the vacuum drying process has been consistently demonstrated to be much less than an 8 or 12 hour shift, the formation of acids in anything more than trace amounts is precluded. Any acid which may be formed from the radiolysis of nitrogen, namely nitric acid, would not be expected to have any deleterious effects on the MPC or its contents. Furthermore, "Perry's Chemical Engineer's Handbook", 7th edition, 1997, shows that the vapor pressure of nitric acid at 0° C is 11 mm Hg. This is well above the 3 mm Hg vacuum pressure required for the vacuum drying process and would lead to the evaporation of any acid that may have been present in the MPC. Therefore, it can be concluded that there is no significant threat of the creation of adverse chemicals in the MPC due to the use of nitrogen for the blowdown process.

Question 8-2

Add a cautionary note in the loading procedures to periodically check the boron concentration of the water in the MPC against the specifications in LCO 3.3.1 when the MPC is flooded and contains fuel.

This periodic check is specified in Surveillance Requirement 3.3.1.1.

The following information is needed to show compliance with 10 CFR 72.124(a).

Response 8-2

A note has been added to the loading procedures indicating that the boron concentration of the water in the MPC shall be checked in accordance with the SR for PWR fuel. See Response TS-3 for additional information.

Question 8-3

Add a step in the unloading sequence to check that the boron concentration of the water meets the specifications in LCO 3.3.1 within 4 hours prior to introducing this water into the MPC.

The following information is needed to show compliance with 10 CFR 72.124(a).

Response 8-3

A note has been added to the unloading procedures indicating that the boron concentration of the water in the MPC shall be checked in accordance with the SR for PWR fuel. See Response TS-3 for additional information.

Chapter 9 - Acceptance Criteria and Maintenance Program

None

Chapter 10 - Radiation Protection

Question 10-1

Clarify the additional ALARA protective measures that a user must employ to decontaminate and survey the HI-TRAC.

Occupational dose estimates from this operation appear to be significant with the new fuel contents.

This information regarding the source term and shielding analysis is needed to determine compliance with 10 CFR 72.236 (d) and 10 CFR Part 20.

Response 10-1

There are no additional generic ALARA protective measures that are required or that Holtec can recommend without knowledge of the site conditions and client loading choices. Specific activities and controls to be employed during loading operations are best left to the Radiation Protection personnel on site as they have more experience with site needs and capabilities. The current design of the Holtec equipment puts into place the basic shielding protection, consistent with the shielding analysis. Supplemental shielding is a site-specific decision made by licensees based on expected dose rates in the vicinity of the cask, which vary based on cask contents and the architectural layout of the plant.

Question 10-2

Explain why the dose rate estimates for surveillance and maintenance exposures did not change in this amendment when compared to Amendment 1.

Calculated dose rates from the casks have significantly increased in this amendment.

This information regarding the source term and shielding analysis is needed to determine compliance with 10 CFR 72.236 (d) and 10 CFR Part 20.

Response 10-2

The surveillance and maintenance exposures were not changed in this amendment because it is felt that the dose rates for these activities will not be significantly affected by the increased dose rates around the overpack. The security surveillance is typically from outside the security fence and the fence is typically positioned such that the area outside the fence is not a radiation area. In fact, one of the inputs in deciding where to position the fence is the expected dose rates from the ISFSI. Surveillance for blocked ducts can be done via visual inspection from inside the fence, outside the fence or with cameras or remote temperature sensors. Therefore, there is little reason for personnel to enter the secured ISFSI for surveillance activities and as a result the dose rate reported in Table 10.3.4 for the surveillance activities are acceptable.

The HI-STORM overpack, once deployed, requires essentially no maintenance. The only maintenance that might be required would be a touch up of the paint. Maintenance around the ISFSI fences would probably occur with a higher frequency, however this location is away from the overpack. Therefore, the dose rates for maintenance activities in the Table 10.3.4 of the FSAR are acceptable.

Question 10-3

Provide the following information regarding proposed TS 5.7:

(a) Revise the proposed TS to state that each user must establish surface dose rate limits using the methodology in Chapter 5 of the FSAR, to assure proper loading, consistency with the off-site dose analysis performed under 10 CFR 72.212, and establishment of operational restrictions under 10 CFR 72.104(b).

(b) Clarify if this proposed TS would allow a user to operate the transfer and storage casks with dose rates that exceed the bounding dose rates calculated in Chapter 5 of the FSAR for the current designs.

(c) Discuss the differences between the radiation protection program implied by TS 5.7, and the 10 CFR Part 50 radiation protection program that a user may have to change in accordance with 10 CFR 72.212(b)(6).

(d) Discuss the meaning of "the methodology described in the HI-STORM FSAR" with respect to its intended use in the proposed TS.

The term "methodology" may be subject to interpretation in which one user assumes a high-level definition (e.g., the basic sequences of performing a shielding calculation), while another user may assume a very rigid definition in which every input assumption and model detail present in Chapter 5 must be applied. It is not clear the level of flexibility that Holtec proposes to give the general license user with respect to establishing dose rate limits, in conjunction with the flexibility that will be given in the removal of bounding dose limits from the TS. The response should consider source term and shielding assumptions in Chapter 5 that are important to establishing safe and ALARA dose rates in accordance with this proposed TS. The staff notes that the response to this issue may impact the responses to the remaining sub-items.

(e) Remove the proposed text regarding "in support of changes to the cask design or procedures made under 10 CFR 72.48."

This is outside of the scope of the radiation protection program.

(f) Justify proposed TS 5.7.2(a).

It is not clear if the three-dimensional transport code must have the same capability, accuracy, level-of-detail, and conservative inputs as present in the MCNP analysis in Chapter 5.

(g) Clarify the meaning of proposed TS 5.7.2(b).

It is not clear how a cask user determines which computer codes have been reviewed and approved by the NRC for HI-STORM shielding applications.

(h) Clarify why a cask user would not consider the source term and shielding codes used in Chapter 5, to be part of the FSAR shielding methodology.

This appears to be partially implied in the requirements proposed in TS 5.7.2(a) and (b).

(i) Revise requirement 5.7.2(c) to state that a user may consider lower Cobalt-59 impurities below the specified values in Chapter 5, if sufficient data exists to verify these values.

(j) Provide a specification regarding the consideration of fuel assemblies that do not meet the minimum enrichment values specified in Chapter 5.

(k) Clarify how a user should perform off-site dose calculations for an overpack and canister configuration that are different from the representative MPC-24 configuration analyzed in Section 5.4.

(l) Clarify how a user should treat possible contamination levels (including inaccessible MPC areas) that exceed the currently approved TS limits (e.g., using the "other appropriate guidance" clause), with respect to its radiation protection program and environmental monitoring program.

It is not clear what levels of exterior contamination should be considered in the off-site dose analyses under 10 CFR 72.212 and operational verification under TS 5.4.

This information regarding the source term and shielding analysis is needed to determine compliance with 10 CFR 72.236 (d) and 10 CFR Part 20.

<u>Response 10-3</u>

(a) TS 5.7 has been revised to state that the user must establish surface dose rate limits for both the HI-TRAC transfer cask and the HI-STORM overpack. However, reference to methodology has been removed from the proposed TS. It is felt that a user will most likely use the methodology described in Chapter 5 for performing their site specific analyses. However, for clarity, the proposed CoC no longer <u>requires</u> the general licensee to use the methodology in Chapter 5. This is acceptable because compliance with the CoC is ultimately demonstrated through measurements. The proposed TS requires the user to establish dose rate limits that are consistent with the analysis used in their 10 CFR 72.212 evaluation. By doing so, there is assurance that as long as the measured dose rates are less than the calculated site-specific values, then the 10 CFR 72.212 evaluation is accurate and the 10 CFR 72.104 regulation will not be violated. Therefore, the concern about the methodology used in calculating the site-specific dose rate limits and in performing the 10 CFR 72.212 evaluation is alleviated because direct measurements are implicitly being used to demonstrate compliance.

(b) The proposed technical specifications do not have a direct link to the dose rates in Chapter 5. The analysis in Chapter 5 is extremely conservative and, as a result it, a loaded cask will never exceed the dose rates in Chapter 5. Requiring the user to verify that measured dose rates are less than the values in Chapter 5 would be an additional unnecessary burden and

would not be appropriate since the calculations in Chapter 5 do not cover all configurations (e.g. the HI-TRAC 125 is only analyzed with the MPC-24 and not the MPC-68 or MPC-32).

(c) The Radiation Protection Program addressed in proposed TS 5.7 is the Part 50 program referred to in 10 CFR 72.212(b)(6), appropriately modified to address cask loading and ISFSI operations. TS 5.7 includes certain required features for the program to address Part 72 activities. Proposed TS 5.7.1 has been modified to clarify this point.

(d) As discussed in the response to (a), all reference to methodology has been removed from the revised TS.

(e) The text concerning 10 CFR 72.48 has been removed from the proposed TS.

(f) The revised TS 5.7 has been extensively revised and as discussed in (a) all reference to methodology has been removed from the TS.

(g) The revised TS 5.7 has been extensively revised and as discussed in (a) all reference to methodology has been removed from the TS.

(h) The revised TS 5.7 has been extensively revised and as discussed in (a) all reference to methodology has been removed from the TS.

(i) The revised TS 5.7 has been extensively revised and as discussed in (a) all reference to methodology has been removed from the TS.

(j) The allowable burnup and cooling times in the proposed CoC now accounts for the enrichment of the fuel assembly (see Response 5-9). The proposed TS has not been revised to discuss assembly enrichment. This is acceptable because, as described in (a), compliance with 10 CFR 72.104 is implicitly being performed through radiation measurements which are being compared to calculated values consistent with the 10 CFR 72.104 analysis. As a result, it is not essential that the enrichment being used for the determination of the technical specification be less than the assemblies being loaded and therefore a discussion on minimum enrichment is not appropriate for TS 5.7.

(k) There are multiple ways a user can perform off-site dose calculations for arrays different than the configuration in Chapter 5. For example, a user could perform a very conservative analysis and calculate the off-site dose from a single cask and multiply by the number of casks in the array. This approach conservatively neglects self shielding within the array. Alternatively, the user could perform a very detailed analysis accounting for each location within the array. Since, there are multiple options it is not appropriate to specify that level detail in the technical specifications.

(l) LCO 3.2.2 regarding contamination levels has been reinstated without changes in the proposed CoC. As a result, there are no longer any requirements pertaining to concerning contamination control in proposed TS 5.7.

Chapter 11: Accident Analysis

Question 11-1

Provide the thermal analysis of blockage of three inlet ducts.

The FSAR states that the blockage of three inlet ducts is evaluated only to demonstrate the limited effects of additional incremental duct blockage. However the analysis results are not provided in the FSAR.

This information is needed to assure compliance with 10 CFR 72.236(f).

Response 11-1

As the three inlet ducts blocked condition is bounded by the all-ducts blocked evaluation (FSAR Section 11.2), this condition is deleted. However, as requested by this RAI, an additional calculation is performed for the peak cladding temperature assuming three inlet ducts are blocked. The calculation is performed for the hottest MPC-68 at design heat load and steady state maximum temperatures are computed. The results are provided below:

Table 11-1.1

Partial Ducts Blockage Results

Inlet Ducts Condition	Peak Clad Temperature (oF)
All Ducts Open	731
2 Ducts Blocked	749
3 Ducts Blocked	792

Question 11-2

Provide the thermal analysis of blockage of two inlet ducts or additional justification why the approach taken is conservative.

The FSAR states that the temperature rise for this case is conservatively calculated by extrapolating data from HI-STORM FSAR Rev. 1, which may not lead to accurate results.

This information is needed to assure compliance with 10 CFR 72.236(f).

Response 11-2

The two ducts blocked scenario is analyzed employing the HI-STORM thermal model described in Section 4.4 of the HI-STORM FSAR (proposed Rev. 2B) at the revised heat loads. Results of the thermal analysis are provided in RAI response 11-1 (Table 11-1.1).

Question 11-3

Clarify and provide consistent total heat load capacity for the HI-STORM 100 MPC. Some portions of the FSAR reference larger head loads.

The FSAR states that the temperature rise is conservatively calculated by prorating the HI-STORM FSAR Rev. 1 reported temperature rise at 28.74 kW heat load to a conservatively postulated heat load of 41.22 kW. However, Table 1.2.2 of the FSAR states that the maximum heat load is 40 kW. Reference to other maximum decay heat loads in the FSAR is confusing.

This information is needed to assure compliance with 10 CFR 72.236(f).

Response 11-3

Calculations at the higher postulated heat loads are removed and replaced by calculations at the revised HI-STORM design heat loads provided in FSAR Table 4.4.39 in Chapter 4.

Question 11-4

Perform the fire thermal analysis for the requested maximum decay heat load.

The FSAR states that by raising the rate of temperature rise by the ratio of design maximum heat load (40 kW) and reference heat load (28.74 kW), a conservative upper bound to the rate of temperature rise is established. The staff does not believe that this approach has provided conservative results.

This information is needed to assure compliance with 10 CFR 72.236(f).

Response 11-4

The fire thermal analysis is performed at the revised HI-STORM design heat loads provided in FSAR Table 4.4.39. The results are provided in the fire analysis Subsection 11.2.4.2 of the HI-STORM FSAR.

Question 11-5

Specify the personnel exposure for recovery of the 100-ton and 125-ton HI-TRAC handling accident.

The new estimated recovery exposures do not appear to have changed from the estimates in Amendment 1, although calculated surface dose rates have significantly increased.

This information regarding the source term and shielding analysis is needed to determine compliance with 10 CFR 72.106(b).

Response 11-5

Dose rate revision in the Chapter 11 text was regrettably overlooked. The cumulative dose estimates for HI-TRAC handling accident, as discussed in FSAR Chapter 5, have increased to 15 rem (up from 5 rem in Amendment 1). The text in Chapter 11 (Subsection 11.2.1.3) is revised to state this result.

Chapter 12: Conditions for Cask Use

Question 12-1

Clarify why the decay heat per fuel assembly for Regions 1 and 2 is constant for a given range of cooling times and fuel burnups.

Table 12.2.1 of the FSAR states that for a given range of cooling times and fuel burnups, the assembly decay heat for Region 2 is constant (i.e., $q_{REGION\ 2}$ = 0.750kW). Similarly the FSAR states that for a given assembly decay heat for Region 1, the allowable burnup must be greater than or equal to 20,000 MWD/MTU.

This information is required to assure compliance with 10 CFR 72.11 and 72.236(b).

Response 12-1

The underlying reason for the constant decay heat values is our adoption of the ISG-11, Revision 2 single peak fuel cladding temperature (PCT) limit for all commercial spent fuel. ISG-11, Revision 2 suggests a single, bounding PCT limit of 400°C, irrespective of cooling time, for long-term normal and short term normal operating conditions (i.e., MPC loading, drying, and on-site transportation operations). The maximum permissible decay heat load for any fuel storage cell (stored CSF including non-fuel hardware (NFH)) is based on this temperature limit and the permissible total MPC heat load established in the thermal analysis. The source of the decay heat (i.e., the fuel or NFH) is not relevant to the thermal analysis.

With the adoption of the single PCT limit recommended by ISG-11, Rev. 2, a single permissible decay heat value per fuel storage cell is now being proposed for use in uniform fuel storage. Similarly, for regionalized storage, a constant decay heat limit per fuel storage cell in each region is being proposed (by definition, this value differs between regions). Allowable fuel assembly burnups, on the other hand, are dependent on cooling time in order to ensure the permissible decay heat limit for a fuel storage cell is not exceeded by the fuel assembly alone. These fuel assembly burnup and cooling time limits (calculated by the user) ensure that the thermal and shielding analysis assumptions are preserved.

Burnup and cooling times for NFH are determined strictly from the shielding analysis. Their contribution to decay heat must be accounted for by the user for the affected fuel storage cells. For example, if the decay heat, burnup and cooling time combination for a particular fuel assembly meets the CoC limit, and that assembly includes non-fuel hardware, the user must ensure the fuel storage cell decay heat limit is not exceeded, considering both the fuel and the NFH. In addition, the user must ensure that the burnup and cooling time for the NFH meets the CoC limit.

The 20,000 MWD/MTU lower burnup limit previously reflected the lowest burnup value considered in the equations used to calculate burnup as a function of decay heat for a given cooling time in the regionalized loading scenario. Since the equations stopped at 20,000 MWD/MTU decreasing, lower burnups are not permitted. In this revised LAR submittal, the 20,000 MWD/MTU lower burnup limit has been eliminated.

Question 12-2

Clarify the appropriate Table 3-1 reference.

The FSAR Chapter 12, Appendix B, page B 3.1.1-7, states that "Table 3-1" provides the appropriate requirements for drying the MPC cavity. Because the Bases section has been moved from the Technical Specifications to the FSAR it is not clear what table is being referenced. Confirm that Tables 3-1 and 3-2 contained in Appendix A to the CoC are the appropriate references in this instance (see also RAI G-1). Clear and consistent use of references should be made in the FSAR in all instances.

This information is not contained in the FSAR and is required to assure compliance with 10 CFR 72.11.

Response 12-2

Tables 3-1 and 3-2 contained in Appendix A to the CoC are the appropriate references in this instance. The Technical Specification (TS) Bases have been a part of the FSAR since original licensing of the HI-STORM 100 System. Appendix 12.B consists of only the TS bases which, by definition and by the format and content guide for improved technical specifications (NUMARC 93-03), apply only to the technical specifications. Any cross-references in the TS bases apply to the technical specifications unless otherwise noted as referring to the FSAR. We realize, however, that having the TS Bases in the FSAR instead of a stand-alone document can cause some confusion to the reader. Therefore, we have reviewed the TS Bases and made appropriate changes to Bases B3.1.1 and B3.3.1 with regard to tabular cross-references to ensure clarity.

Chapter 13 - Quality Assurance (QA)

Question 13-1

Clarify the phrase "may be applied" in Chapter 13, Section 13.0.1, "Overview," second paragraph, third sentence. Make it clear under what conditions the QA program would and would not be applied.

In Chapter 13, Section 13.0.1, "Overview," second paragraph, the third sentence states "may be applied." The word "may" introduces ambiguity as to whether the QA program will be applied.

This information is required to evaluate compliance with10 CFR 72.140.

Response 13-1

We agree that the proposed text may be ambiguous. The phrase "may be applied" as proposed for use in FSAR Chapter 13, Section 13.0.1 was simply intended to state that 10 CFR 72.140(d) provides *permission* for licensees, applicants for licenses, certificate holders, and applicants for CoCs to use a previously approved QA program in lieu of obtaining separate NRC approval of their QA program pursuant to 10 CFR 72.140(c). It was not intended to imply that application of the QA program is in any way optional for important-to-safety dry storage activities. In Holtec's case, our QA program has been reviewed and approved by the NRC under 10 CFR 71, Subpart H (Docket 71-0784) and the option permitted by 10 CFR 72.140(d) is requested to be applied for our important-to-safety dry storage activities. The text of FSAR Section 13.0.1 has been revised to state that the QA program "will" be applied.

Question 13-2

Clarify the third sentence in Chapter 13, Section 13.0.1, "Overview," second paragraph to make it clear that the record keeping requirements of 10 CFR 72.174 will be met.

In Chapter 13, Section 13.0.1, "Overview," second paragraph, the third sentence does not clearly state that the added records requirements will be met.

Title 10 CFR 72.174 requires records be kept until the CoC is terminated.

Response 13-2

The proposed FSAR text has been clarified in this regard to clearly state that the requirements of 10 CFR 72.174 will be met.

Question 13-3

Clarify Chapter 13, Section 13.0.1, "Overview," fourth paragraph to make Holtec's commitment and responsibilities clear.

In Chapter 13, Section 13.0.1, "Overview," fourth paragraph, the first sentence is ambiguous and does not clearly convey Holtec's obligation to assess the suppliers QA program in regards to its adequacy for 10 CFR Part 72 work prior to allowing activities to be performed under it.

Title 10 CFR 72.142 requires that the certificate holder retains the responsibility for tasks delegated to others.

Response 13-3

The FSAR has been revised to unambiguously document Holtec's obligation to impose an appropriate level of QA oversight on its suppliers, in accordance with the requirements stated in the Company's NRC-approved QA program. Suppliers to Holtec are evaluated appropriately as part of our vendor qualification program before safety-significant† items or services are procured. That is, prior to allowing a supplier to use their own QA program for Part 72 important-to-safety activities, we ensure that their program meets the requirements of 10 CFR 72, Subpart G, as applicable to the item or service being provided. Please also see Response 13-4 for additional clarification pertaining to QA oversight of suppliers.

Question 13-4

Clarify the statement in Chapter 13, Section 13.0.1, "Overview," fourth paragraph, to make it clear that Holtec oversight will be sufficient to assure that quality requirements are met.

In Chapter 13, Section 13.0.1, "Overview," fourth paragraph, the second sentence is ambiguous in that by saying that the type and extent of Holtec QA oversight is specified in procurement documents, the sentence does not communicate that the type and extent of oversight will be sufficient to verify that adequate quality will be achieved.

Title 10 CFR 72.142(b)(2) requires that the certificate holder verify that activities have been correctly performed.

Response 13-4

The intent of the proposed FSAR text is to clarify that Holtec's suppliers may perform work under their QA program or under Holtec's program, as imposed through the procurement documents. Holtec's obligation to assess its suppliers' QA programs for any safety-significant work is spelled out in the QA program (Section 7.0) and sub-tier implementing quality procedures. Based on the particular supplier and the QA requirements applicable to the procurement, the level of oversight may vary, and is clearly delineated in the procurement documents. The fundamental goal of the supplier oversight portion of Holtec's QA program is to provide assurance that activities performed by vendors in support of the supply of safety-significant items and services are performed correctly and in compliance with the procurement documents. SAR Section 13.0.1 has been revised to clarify this commitment. We believe the specific type and extent of Holtec oversight of a supplier, which depends on the status of his QA program, represents a level of detail more appropriately stated in the implementing QA procedures, not in the FSAR.

---

† "Safety Significant" is a term defined in the Holtec QA program manual that means "safety-related" for 10 CFR 50 or "important-to-safety" for 10 CFR 71 or 72.

Question 13-5

Clarify what type of equipment is included under "other equipment used to deploy the HI-STORM system" in Chapter 13, Section 13.0.2, "Graded Approach to Quality Assurance," second paragraph. If this equipment is not required to meet 10 CFR Part 72 quality requirements, please indicate so, or provide the conditions under which the equipment is required to meet 10 CFR Part 72 quality requirements. If the equipment is not required to meet 10 CFR Part 72 quality requirements, then please describe the quality requirements being applied.

In Chapter 13, Section 13.0.2, "Graded Approach to Quality Assurance," second paragraph, the last sentence states that "Quality categories for other equipment used to deploy the HI-STORM 100 System are defined on a case-specific basis based on site-specific needs and the component's design function." It is not clear what type of equipment is being described as needed or used to "deploy the HI-STORM 100 System."

Title 10 CFR 72.140(b) requires quality assurance criteria be applied in a graded approach consistent with its importance to safety.

Response 13-5

The referenced FSAR statement was intended to recognize that, as Holtec's dry storage systems are deployed throughout the world, new ancillary equipment may be needed to support an ALARA-conscious and safe deployment. The identity of this as-yet-unknown equipment is, therefore, not available. When new equipment is developed for use, the safety classification and quality category of the equipment is determined using administrative controls and Holtec procedures that invoke the guidance contained in NUREG/CR-6407 and the licensing basis described in the FSAR. Based on its design function, all equipment designated important-to-safety is subject to Holtec's quality program requirements. Not important-to-safety equipment is governed by commercial grade requirements. Therefore, new equipment may or may not be required to perform an important-to-safety function and, accordingly, may or may not be subject to Holtec's quality program requirements (i.e., it may be a operational efficiency improvement).

Question 13-6

Clarify the point that Holtec is trying to make in Chapter 13, Section 13.0.2, "Graded Approach to Quality Assurance," third paragraph.

In Chapter 13, Section 13.0.2, "Graded Approach to Quality Assurance," the third paragraph appears to be attempting to state that Holtec, acting as a contractor to a general licensee, may perform some on-site ISFSI activities for the general licensee as would be described in the general licensee's contract with Holtec. The general licensee, not Holtec, is responsible for the quality of any contracted services.

Title 10 CFR 72.154 states the licensee shall ensure that contracted services conform to requirements.

Response 13-6

We agree with the reviewer's comment. The point being made in this SAR text is that general licensees often contract with Holtec for a variety of products or services in addition to the supply of the spent fuel storage casks. These activities may be performed on-site at the licensee's facility or at Holtec's facilities. Each licensee's procurement documents define the unique scope of supply and impose necessary quality requirements on Holtec as the supplier of the particular item or service. We agree that the general licensee is ultimately responsible for the quality of any contracted services. The FSAR statement in question simply recognizes that the licensee's procurement documents may permit Holtec to produce items and render services to a licensee under its own QA program. It also obligates Holtec to invoke its NRC-approved QA program in rendering services to the industry that, strictly speaking, fall outside the purview of the Part 72 scope of supply.

Question 13-7

Clarify the intent of the seemingly incongruous statement in Chapter 13, Section 13.0.2, "Graded Approach to Quality Assurance," third paragraph.

In Chapter 13, Section 13.0.2, "Graded Approach to Quality Assurance," the third paragraph states that activities affecting quality are defined in a purchaser's contract on a *site-specific* ISFSI under the *general* license provisions of 10 CFR 72, Subpart K.

Title 10 CFR 72.6 defines the differences in general and specific ISFSI licenses.

Response 13-7

We recognize and understand the difference between site-specific and general licenses granted under 10 CFR 72. The FSAR statement in question was intended to recognize the fact that, as a certificate holder, we supply dry storage casks and other items and services to a large number of plant sites, each of which has its own unique characteristics. The intent of this FSAR statement is to acknowledge the fact that each ISFSI facility is unique to each general licensee's plant site, based on that plant's operational needs and capabilities, even though the dry storage cask design is generically certified. We agree that use of the term "site-specific ISFSI" in this paragraph can cause confusion. The text has been revised to delete the term "site-specific."

Question 13-8

Identify the previously approved quality assurance program by date of submittal to the Commission, docket number, and date of Commission approval in the FSAR.

The FSAR does not identify the previously approved quality assurance program by date of submittal to the Commission, docket number, and date of Commission approval.

Title 10 CFR 72.140(d) states that in filing the description of the quality assurance program required by paragraph (c) 10 CFR Part 72 the certificate holder shall notify the NRC, in accordance with Sec. 72.4, of its intent to apply its previously approved quality assurance program to ISFSI activities or spent fuel storage cask activities. The notification shall identify the

previously approved quality assurance program by date of submittal to the Commission, docket number, and date of Commission approval.

Response 13-8

FSAR Section 13.0.1 identifies the quality assurance program and NRC approval via two references ([13.0.2] and [13.0.4]). However, these references do not include all of the information requested. The FSAR text in Section 13.0.1 and references in FSAR Section 13.6 have been revised as necessary to improve clarity and provide the requested information.

Certificate of Compliance

Appendix A of CoC: Technical Specifications

Question TS-1

Identify the provision in the technical specifications that limits the fissile content in a damaged fuel canister to no more than that in one fuel assembly.

The following information is needed to show compliance with 10 CFR 72.124(a).

Response TS-1

Fuel assembly requirements for loading are specified in Section 2 of Appendix B to the CoC. Damaged fuel is permitted to be stored in damaged fuel containers all MPC models except MPC-24. Fuel debris is permitted to be stored in damaged fuel containers in the MPC-68F, -68FF, -24EF, and –32F. The fissile content of a damaged fuel container is not explicitly limited in the CoC to no more than that in one fuel assembly. However, CoC Tables 2.1-1, 2.1-2, and 2.1-3 are entitled "Fuel Assembly Limits," "PWR Fuel Assembly Characteristics," and "BWR Fuel Assembly Characteristics," respectively, indicating that the limits provided are for an individual fuel assembly. That is, for any fuel storage location, the contents must meet the limits of a single array/class in these tables, which are for single fuel assemblies. These limits include maximum enrichment (wt% ^{235}U) and total uranium mass which, together, limit the fissile content to that of one assembly. Similar limits are provided for MOX assemblies.

Question TS-2

Clarify whether authorization is being sought to mix fuel assembly types in a single MPC.

If authorization to mix fuel types is being sought, provide the justification for this. Otherwise, identify or add specifications to preclude the mixing of fuel types. The application of the table in LCO 3.3.1 is of particular concern.

The following information is needed to show compliance with 10 CFR 72.124(a).

Response TS-2

Authorization is being requested to mix assembly types to the extent required to meet the needs of commercial nuclear plants. Many plants' spent fuel inventories include different fuel types that fall into more than one of the assembly "array/classes" defined in our FSAR and CoC. The intention of LCO 3.3.1 is to require the most limiting (highest) soluble boron concentration for all of the fuel types being loaded into, or unloaded from the MPC. LCO 3.3.1 has been modified with a note to make this requirement clear.

Question TS-3

Revise the frequency statement for Surveillance Requirement 3.3.1.1 to make it clear that the initial verification of boron concentration must take place within 4 hours before the first fuel assembly is loaded into the MPC.

The current wording could be interpreted as allowing this verification to occur after loading begins.

The following information is needed to show compliance with 10 CFR 72.124(a).

Response TS-3

The Frequency for SR 3.3.1.1 has been revised to be (changes in italics):

> "*Once* within 4 hours *prior to* entering the Applicability of this LCO
>
> AND
>
> Once per 48 hours thereafter."

The Applicability of the LCO remains:

> "During PWR fuel LOADING OPERATIONS with fuel and water in the MPC
>
> AND
>
> During PWR fuel UNLOADING OPERATIONS fuel and water in the MPC."

This change to the Frequency assures that the SR will be performed within four hours of having both fuel and water in the MPC. This is because, by definition, LOADING OPERATIONS begin when the first fuel assembly is loaded into the MPC (which is already filled with water) and UNLOADING OPERATIONS begin with fuel, but no water in the MPC.

Appendix B of CoC: Approved Contents and Design Features for the HI-STORM 100 Cask System

Question B-1

Clarify which fuel type assemblies (i.e., intact or damaged) are being characterized by Tables 2.4-1, 2.4-2, and 2.4-3 of TS.

Appendix B of TS states that "For MPCs partially loaded with DAMAGED FUEL ASSEMBLIES or FUEL DEBRIS, all remaining ZR clad INTACT FUEL ASSEMBLIES in the MPC shall meet the decay heat generation limits for the DAMAGED FUEL ASSEMBLIES. This requirement applies only to uniform fuel loading." The above tables do not specify which fuel assembly types (i.e., intact or damaged) are being characterized.

This information is needed to assure compliance with 10 CFR 72.11.

Response B-1

CoC Appendix B, Tables 2.4-1 through 2.4-3 provide limits for intact and damaged fuel assemblies. In light of the thermal evaluation addressing damaged fuel in FSAR Section

4.4.1.1.4, the restriction specified in CoC Appendix B, Section 2.1.1.c is no longer required and has been removed as a proposed CoC change.

Question B-2

For Regionalized Fuel Loading, explain why a chosen value for Region 2 shall be the same for each fuel assembly with cooling times from 3-20 years.

This information is needed to assure compliance with 10 CFR 72.236(f)

Response B-2

The chosen value of decay heat for each fuel assembly in Region 2 is sufficient for defining the thermal restriction for Region 2 cells because the permissible peak fuel cladding temperature (PCT) is no longer dependent on the age (cooling time) of the fuel. Please also see Response 12-1 for additional information pertaining to the thermal and shielding-based limits in the CoC.

Question B-3

Provide Regionalized Storage Non Cooling Time-Dependent Inputs for the MPC-68F design.

Tables 2.4-5 and 2.4-6 of TS do not provide this information for the MPC-68F design.

This information is needed to assure compliance with 10 CFR 72.236(f).

Response B-3

Regionalized fuel storage is not required or permitted in the MPC-68F in accordance with CoC Appendix B, Section 2.1.3 and Figure 2.1-4, which exclude this MPC model. Only fuel from the Dresden Unit 1 and Humboldt Bay power plants are permitted for storage in the MPC-68F due to the relatively low Boron-10 loading in the neutron absorber in this design (see FSAR Section 1.2.3 and CoC Appendix B, Section 3.2). Each fuel assembly to be stored in the MPC-68F is subject to a single decay heat, burnup, and cooling time limit in accordance with CoC Table 2.1-1, Section III. That is, a decay heat $\leq$ 115 Watts, a burnup $\leq$ 30,000 MWD/MTU, and a cooling time $\geq$ 18 years. Regionalized loading has no significant benefit for fuel of this old age and low decay heat. The definition of Regionalized Fuel Loading in FSAR Table 1.0.1 has been revised to clarify this point.

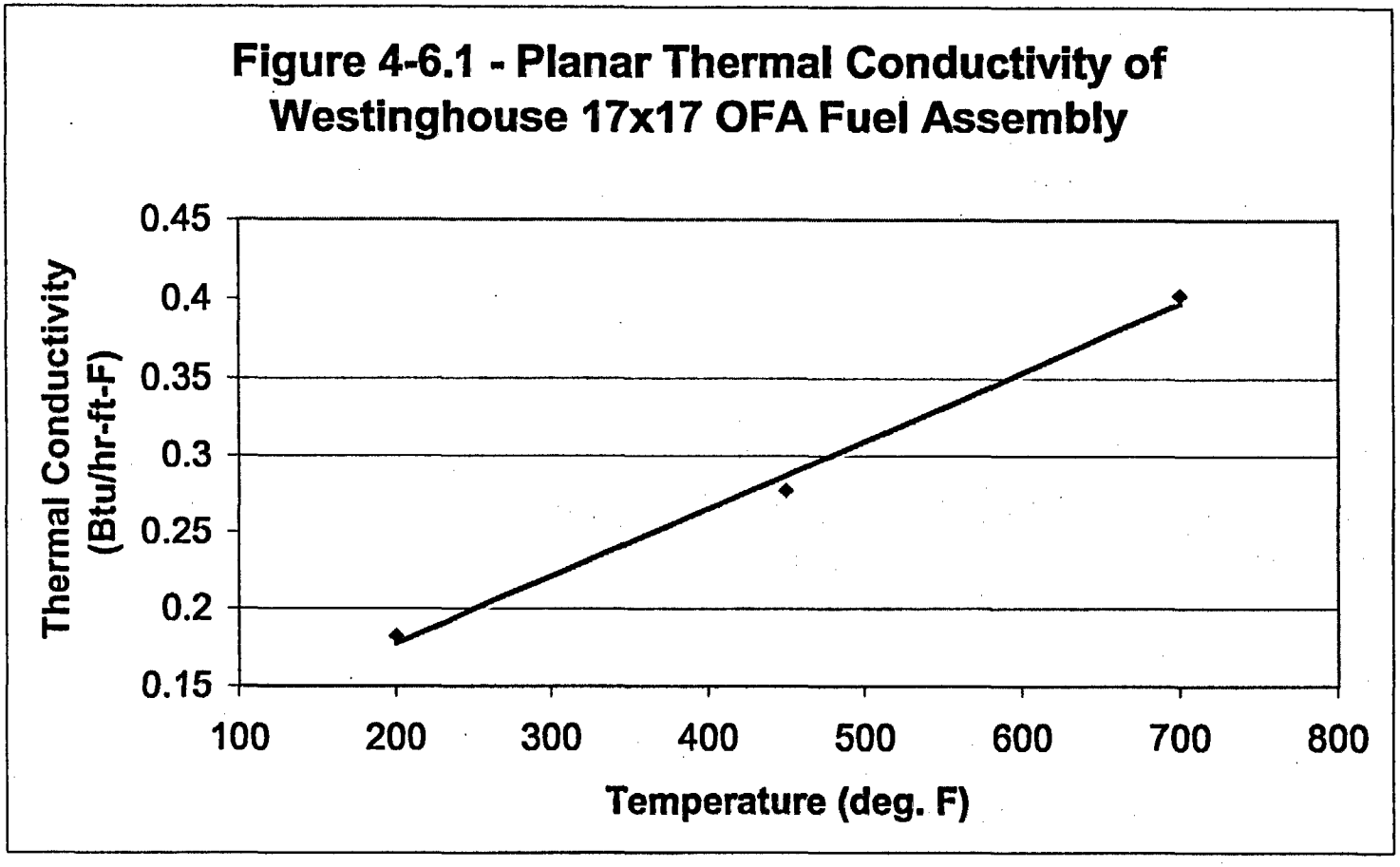
Figure 4-6.1 - Planar Thermal Conductivity of Westinghouse 17x17 OFA Fuel Assembly
Thermal Conductivity (Btu/hr-ft-F)
0.45
0.4
0.35
0.3
0.25
0.2
0.15
100
200
300
400
500
600
700
800
Temperature (deg. F)

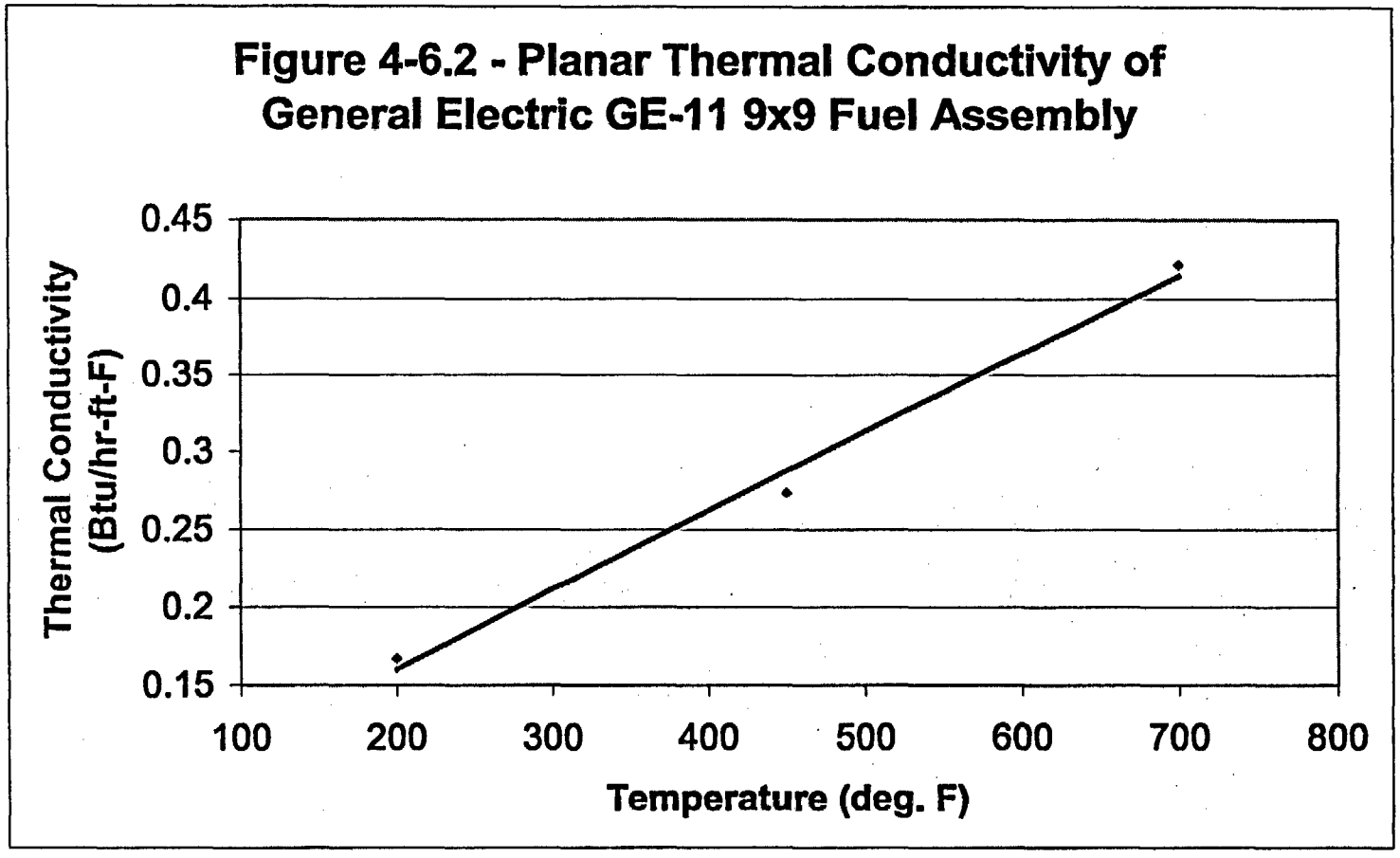
Figure 4-6.2 - Planar Thermal Conductivity of General Electric GE-11 9x9 Fuel Assembly
Thermal Conductivity (Btu/hr-ft-F)
0.45
0.4
0.35
0.3
0.25
0.2
0.15
100
200
300
400
500
600
700
800
Temperature (deg. F)

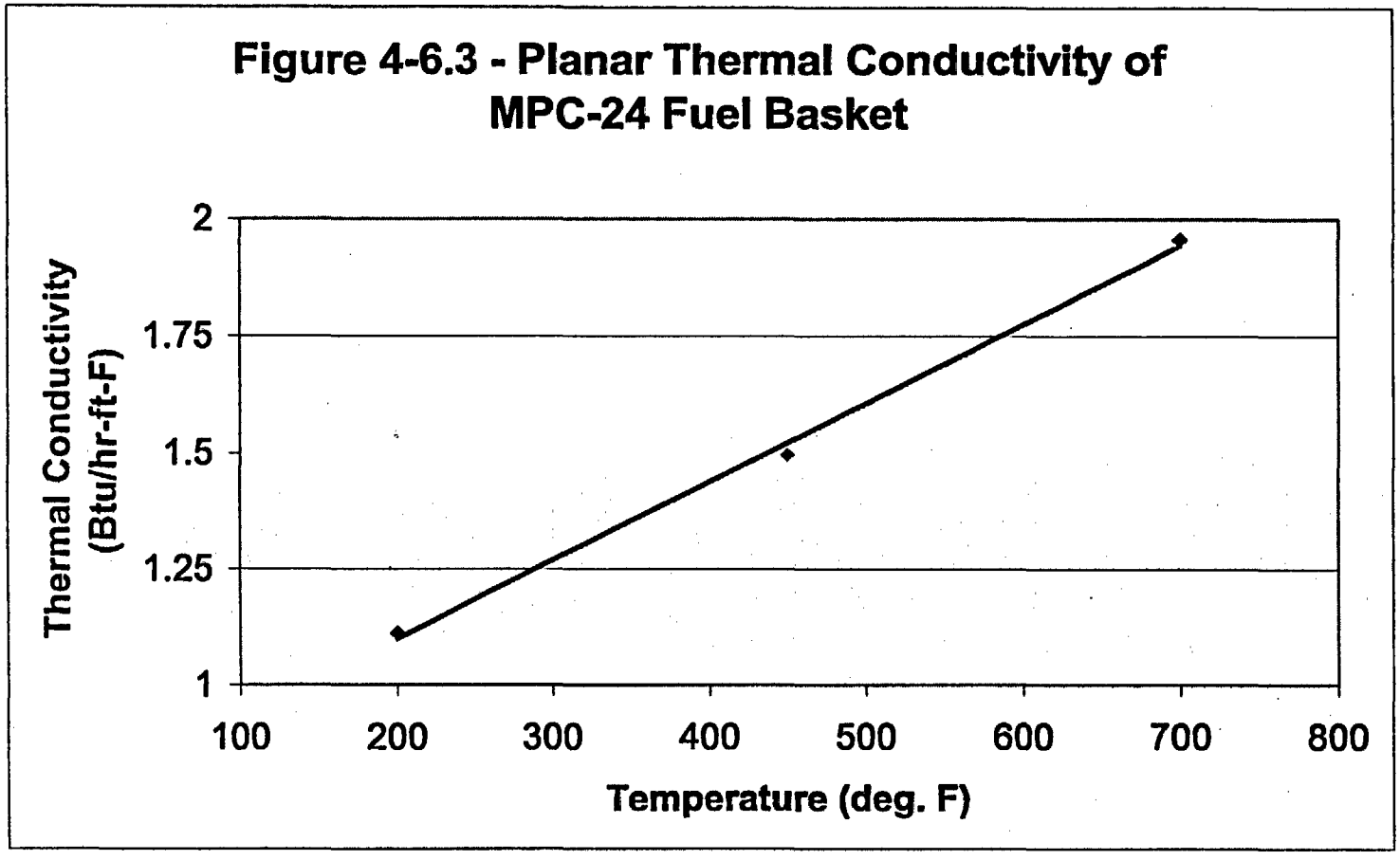
Figure 4-6.3 - Planar Thermal Conductivity of MPC-24 Fuel Basket
Thermal Conductivity (Btu/hr-ft-F)
2
1.75
1.5
1.25
1
100
200
300
400
500
600
700
800
Temperature (deg. F)

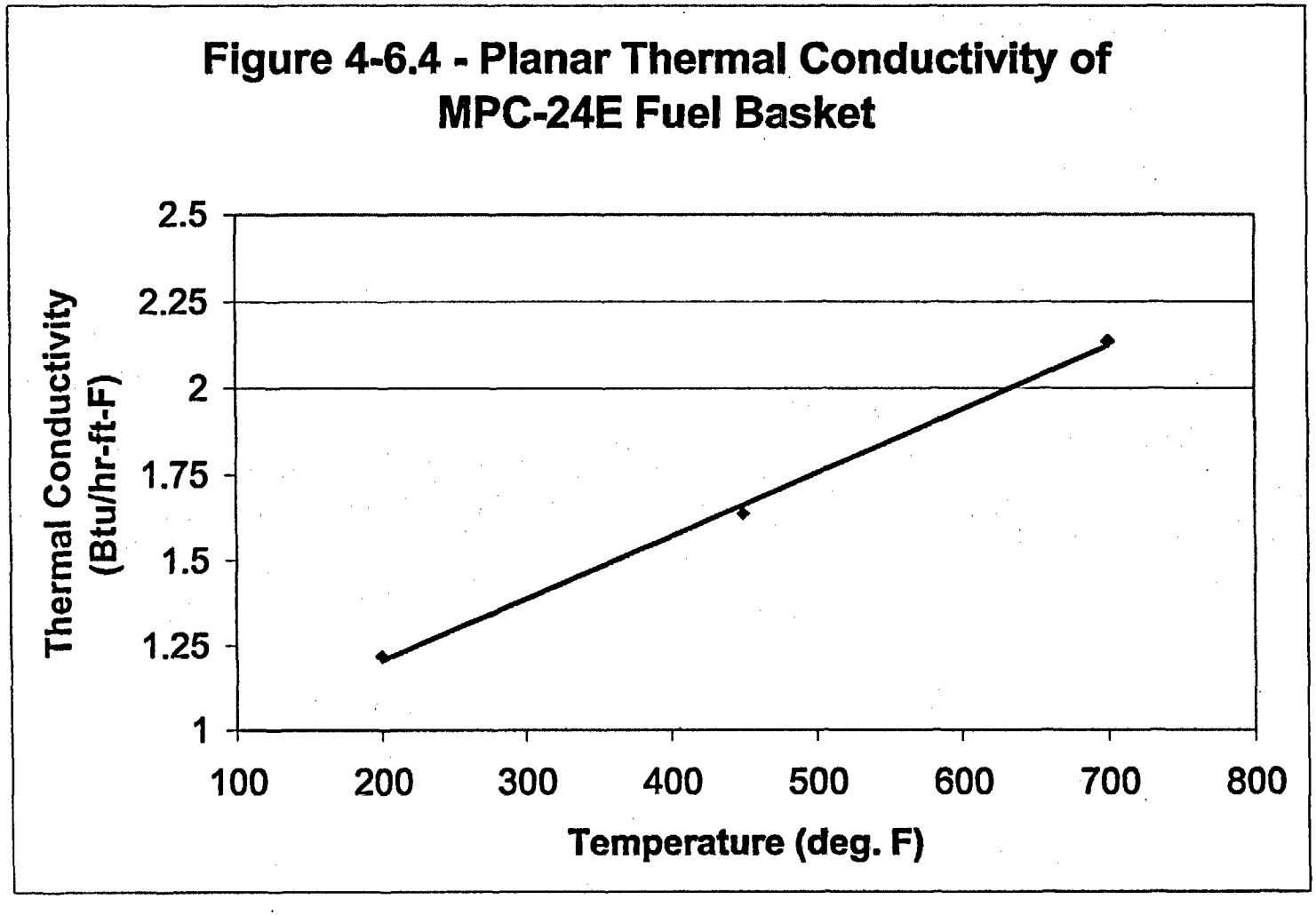
Figure 4-6.4 - Planar Thermal Conductivity of MPC-24E Fuel Basket
Thermal Conductivity (Btu/hr-ft-F)
2.5
2.25
2
1.75
1.5
1.25
1
100
200
300
400
500
600
700
800
Temperature (deg. F)

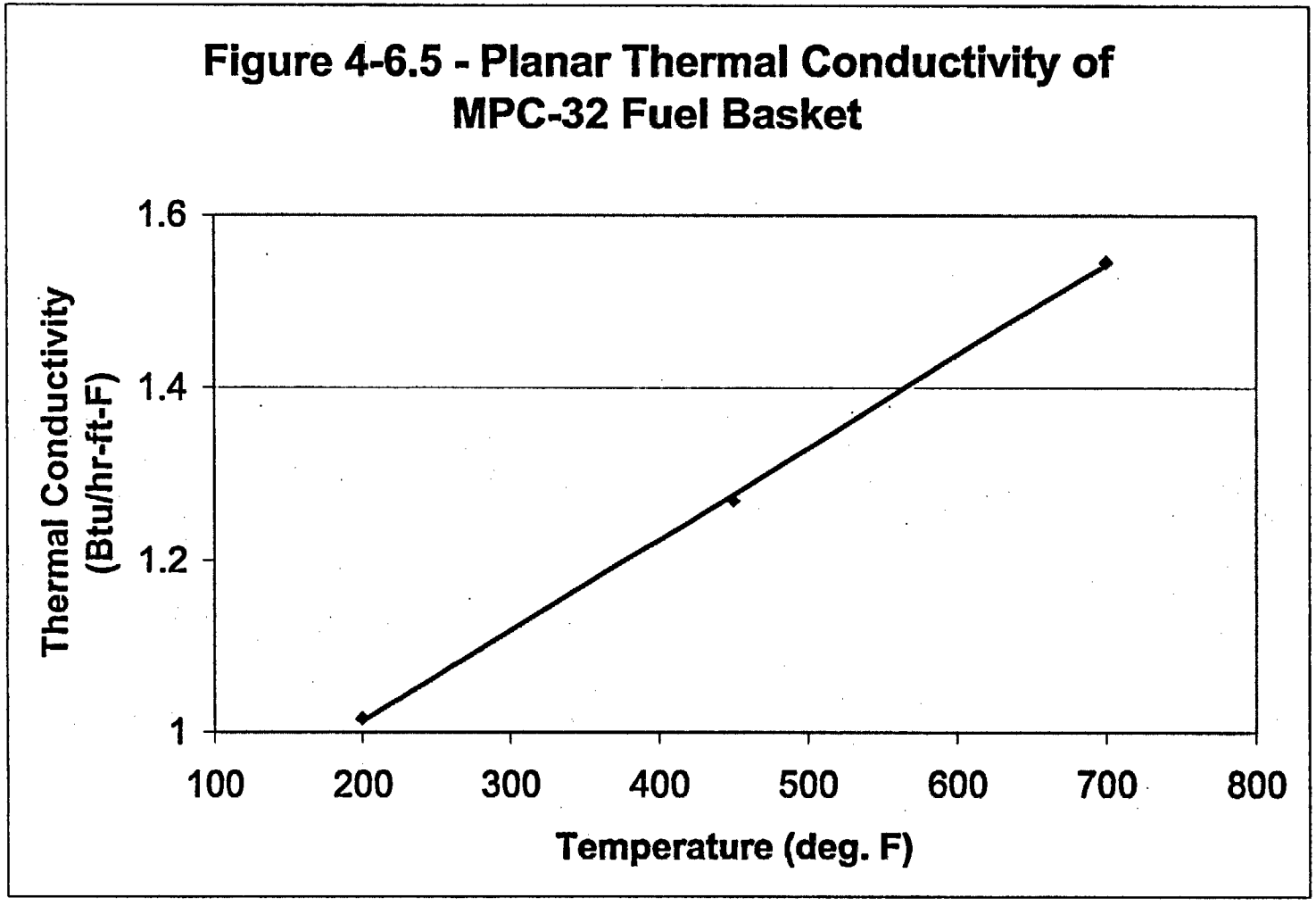
Figure 4-6.5 - Planar Thermal Conductivity of MPC-32 Fuel Basket
Thermal Conductivity (Btu/hr-ft-F)
1.6
1.4
1.2
1
100
200
300
400
500
600
700
800
Temperature (deg. F)

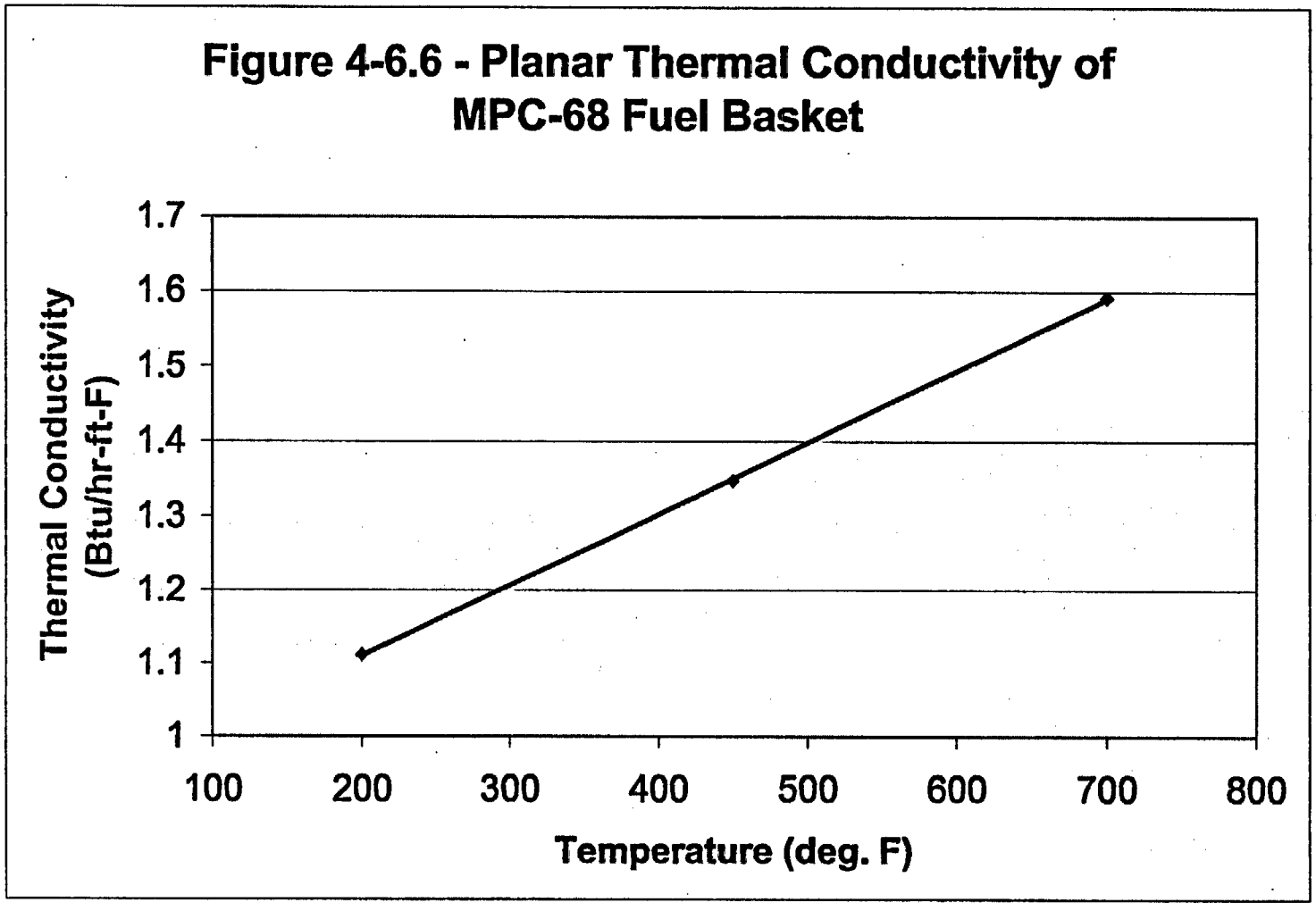
Figure 4-6.6 - Planar Thermal Conductivity of MPC-68 Fuel Basket
Thermal Conductivity (Btu/hr-ft-F)
1.7
1.6
1.5
1.4
1.3
1.2
1.1
1
100
200
300
400
500
600
700
800
Temperature (deg. F)

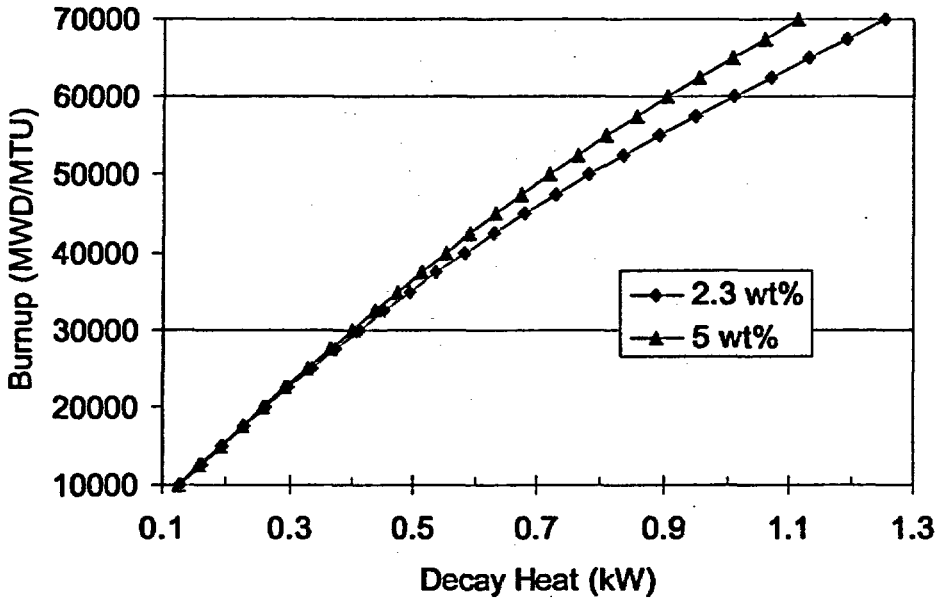

Figure 5-18.1: Burnup versus decay heat curve for a B&W 15x15 fuel assembly for two different enrichments.

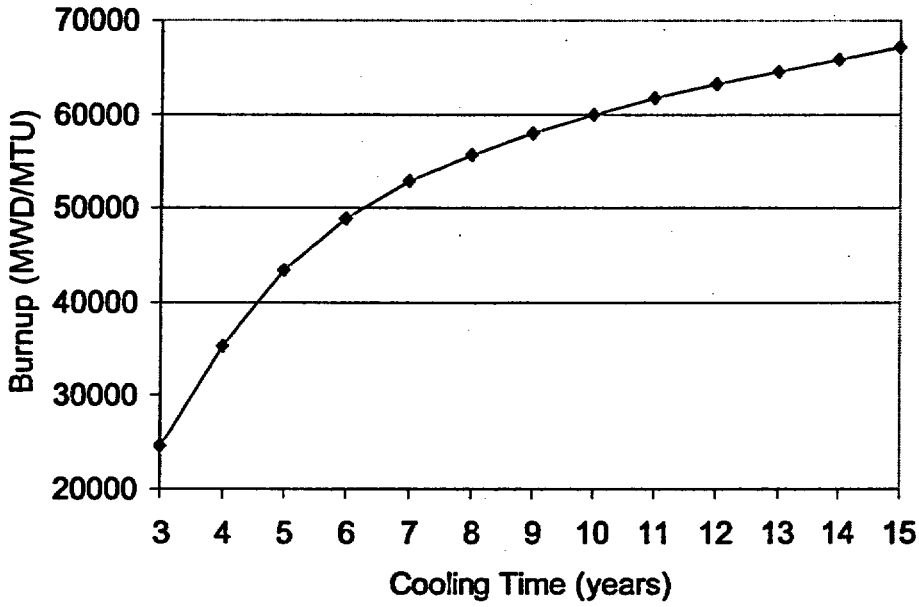

Figure 5-19.1: Burnup versus cooling time for a B&W 15x15 assembly with an enrichment of 5 wt.% ^{235}U and a constant decay heat of 1.1875 kW.

LAR 1014-2, REVISION 2 SUMMARY OF PROPOSED HI-STORM 100 SYSTEM CHANGES

SECTION I – PROPOSED CHANGES TO CERTIFICATE OF COMPLIANCE 1014

Proposed Change No. 1

Certificate of Compliance, Section 1.b and Appendix B, Section 3.2:

Remove the specific reference to BORAL® neutron poison material to allow the use of an alternate, equivalent neutron poison material, METAMIC®, as defined in the FSAR

Reason for Proposed Changes

This change is proposed to allow flexibility in choosing the neutron absorber material used in the MPC basket. The neutron absorber material METAMIC® is proposed as an alternative to BORAL®. Because of the absence of interconnected porosities, the time required to dry a METAMIC®-equipped MPC is expected to be less compared to an MPC containing the rolled cermet class of neutron absorbers such as BORAL®.

Justification for Proposed Changes

METAMIC® neutron poison material has been demonstrated to be equivalent to BORAL® in performing the design function of absorbing thermal neutrons. METAMIC® is also equivalent to BORAL® in its thermal, structural, and shielding performance. The dimensions and tolerances for the fabrication and installation of the METAMIC® neutron absorber panels are identical to the current BORAL® dimensions and tolerances. The weight percent of B_4C in METAMIC® is less than that for BORAL® given the same panel thickness, ^{10}B areal density, and ^{10}B loading penalty (25%).

METAMIC® has been considered in the criticality analyses in the same manner as BORAL® previously was considered, with one exception: only a 10% penalty on ^{10}B loading was considered for METAMIC® versus the previous licensing basis value of 25% for BORAL®. This change is appropriate because METAMIC® is essentially a solid material rather than a rolled cermet. Section 1.2.1.3 of Proposed FSAR Revision 2.B contains more detailed information regarding this change and Section 9.1 contains the qualification and production test program supporting the use of METAMIC® with 90% credit for ^{10}B.

EPRI Report 1003137, "Qualification of METAMIC® for Spent-Fuel Storage Applications" provides the pertinent qualification tests data for this material.

Holtec International proprietary Report HI-2022871, "Use of METAMIC® in Fuel Pool Applications", includes a detailed discussion of the use of METAMIC® in wet storage applications, but also includes information germane to dry storage. Both of these reports support the conclusion that METAMIC® is well-suited for use in spent fuel storage casks. See proposed revisions to FSAR Sections 1.2.1.3, 4.2, 5.3, 6.4.11, and 9.1 in Attachment 5 for additional discussion.

Note: Appropriate conforming editorial changes to the MPC design drawings will be made after approval of the CoC amendment.

Proposed Change No. 2

Certificate of Compliance, Section 1.b and 9; Appendix A, LCO 3.3.1; and Appendix B, Table 2.1-1:

a. Modify CoC Section 1.b, Appendix A, LCO 3.3.1, and Appendix B, Section V of Table 2.1-1; and add new Section VIII to Appendix B, Table 2.1-1 to authorize damaged fuel for loading into the MPC-32 and damaged fuel and fuel debris for loading into the MPC-32F.

b. Revise LCO 3.3.1 to re-format the required minimum soluble boron requirements for MPC-32/32F to provide the appropriate values for soluble boron based on fuel assembly array/class, intact vs. damaged fuel, and initial enrichment.

Reason for Proposed Changes

a. Damaged fuel and fuel debris currently are not authorized for loading in the MPC-32. Users currently must load PWR damaged fuel and fuel debris in the MPC-24E and -24EF. This change would enable customers to load all MPC-32 canisters on their ISFSI if they choose to do so.

b. The reformatting of the MPC-32/32F soluble boron requirements reduces the current, across-the-board soluble boron concentration of 2,600 ppmb for MPC-32 to account for differences in fuel types and enrichments. This change can help reduce the amount of radioactive waste produced at a plant if the boron concentration in the spent fuel pool must be temporarily increased for cask loading.

Justification for Proposed Change

a. The addition of damaged fuel and fuel debris as authorized contents in the MPC-32 and MPC-32F has been analyzed and found to be acceptable.

The creation of MPC-32F entails only the thickening of the MPC shell at the top (with an associated reduction in the diameter of the MPC lid) and increasing the size of the lid-to-shell weld. This design difference is exclusively needed for qualification of the dual-purpose MPC for 10 CFR 71 transport loads - see proposed changes to FSAR Section 2.1.3 and new FSAR Figure 2.1.9. The rest of the MPC-32 and MPC-32F shell and basket designs are identical. This is the same design detail previously approved for the MPC-68F, MPC-68FF, and MPC-24EF in earlier CoC amendments. Allowing users to load damaged fuel and fuel debris into 32-assembly MPCs instead of 24-assembly MPCs reduces the risk of operating events and reduces the overall dose to personnel from ISFSI operations by reducing the total number of casks required to store a given amount of spent fuel. The MPC-32/32F damaged fuel container is shown in new FSAR Figure 2.1.2D. The technical evaluation is summarized below by discipline.

Structural

The generic MPC-32/32F damaged fuel container (DFC) design is different in two respects from the previously approved generic MPC-24E PWR DFC: 1) the wall thickness is reduced from 0.075 inch to 0.0239 inch and 2) there is one additional spot weld per side in the MPC-32/32F DFC baseplate. A structural evaluation for the MPC-32/32F DFC is documented in the MPC structural calculation package (Report HI-2012787, Supplement 25) and all safety factors remain greater than 1.0.

Thermal

The storage of DFCs containing damaged fuel assemblies in the peripheral fuel cells in MPC-32/32F is acceptable because, in a bounding evaluation, the effect of the presence of DFCs on peak fuel cladding temperature is negligible (i.e., much less than 1°F).

Shielding

Generic damaged fuel has been analyzed in the MPC-24 and the MPC-68. The effect of storing damaged fuel and the post-accident consequences of collapsed damaged assemblies has been analyzed for the MPC-24 and the MPC-68. The results presented in the FSAR for the MPC-24 and the MPC-68 conclude that there is little effect on the external dose rates as a result of storing damaged fuel assemblies in these baskets.

Since storage of damaged fuel in the MPC-32 is similar to the MPC-24 and MPC-68 in that a limited number of assemblies are stored on the

periphery of the basket, the effect on the external dose rates from storing damaged fuel in the MPC-32 will be similar to the effect seen in the MPC-24 and the MPC-68. Based on the results for the MPC-24 and MPC-68, it is concluded that the effect on the external dose rates from storing damaged fuel in the MPC-32 will be small. Therefore, storage of damaged fuel in the MPC-32 is acceptable from a shielding perspective without performing explicit MCNP calculations. Section 5.4.2 of the FSAR has been modified to add the above discussion pertaining to MPC-32.

Criticality

Criticality evaluations were performed for the MPC-32/32F with intact fuel and damaged fuel/fuel debris using the same bounding fuel debris model developed in HI-STORM Amendment 1 for the MPC-68/68FF and the MPC-24E/EF. Additional calculations were performed to demonstrate that this model is conservative in the presence of soluble boron. Details of the damaged fuel model and calculations are discussed in general in FSAR Section 6.4.4.2, and calculations for the MPC-32/32F are specifically addressed in Section 6.4.4.2.6. These proposed FSAR changes may be found in Attachment 5.

Note that some of the reactivities reported in Tables 6.1.5 and 6.1.6 have increased slightly, although the corresponding soluble boron requirement were not changed. This is the result of a more extensive and slightly more conservative set of evaluations regarding the water density and the fill status of the guide tubes (see Tables 6.4.10, 6.4.11 and 6.4.14). These evaluations were necessary for consistency between the assembly classes and soluble boron levels.

Confinement

There is not impact on the MPC enclosure vessel pressure boundary design or performance. Therefore, the MPC remains leak tight.

b. The re-formatting of the minimum boron concentration is consistent with the supporting criticality evaluations. FSAR Section 6.4, and specifically Section 6.4.2.1.2, (Attachment 5) contain the details of the supporting evaluations. Users who previously may have had to increase the boron concentration in the spent fuel pool to load an MPC-32, may not need to do so if their normal spent fuel pool soluble boron concentration is sufficiently high. The eliminates the radioactive waste produced when boron concentration is temporarily increased for cask loading and subsequently decreased for normal pool operation.

Proposed Change No. 3

Certificate of Compliance, Sections 1.a and 1.b:

Revise the wording in these two CoC sections as follows:

a. In Section 1.a and the first paragraph of Section 1.b, delete the "100 or 100S" designation in the references to the HI-STORM overpack

b. In the second paragraph of Section 1.b, clarify that some early vintage MPCs include aluminum heat conduction elements (AHCEs)..

Note: Conforming editorial changes to the affected MPC drawings will be made after approval of this amendment request.

c. In the third paragraph of Section 1.b, delete all information pertaining to the authorized contents of each MPC model and add a statement defining the suffix to the MPC model number.

d. In the fourth paragraph of Section 1.b, change the word "types" to "sizes" in two places in reference to the HI-TRAC transfer cask.

e. In the fifth paragraph of Section 1.b: i) clarify the description of the differences between the HI-STORM 100S and HI-STORM 100 overpacks, ii) specify number of overpack air inlets and outlets as minimums, and iii) delete the terms "standard" and "short" from the discussion of HI-STORM 100A.

Reason and Justification for Proposed Changes

a. These changes for the overpack description are proposed for consistency with the discussion of the HI-TRAC transfer cask and MPCs in these portions of the CoC.

b. For those MPCs loaded under CoC Amendment 2 or later, the AHCEs are prohibited because they have not been included in the thermal evaluation model. In the thermal evaluation for those MPCs loaded under the original CoC or Amendment 1, the aluminum heat conduction elements were conservatively modeled as a flow restriction, but no credit was taken for heat transfer through them in the bounding thermal analysis presented in FSAR Revision 1; therefore, the AHCEs are optional equipment for MPCs loaded under the original CoC or Amendment 1. There are a number of MPCs that are, or will be loaded under the original CoC or

Amendment 1 that contain AHCEs. Therefore, this proposed change is consistent with past and future MPCs and the supporting thermal analyses. Sections 1.2.1.1 and 4.4.1.1.b of the proposed FSAR (Attachment 5) have been modified appropriately to address this change. See also Proposed Change No. 22.

c. This information currently duplicates Section 6 of the CoC, which refers to Appendix B of the CoC for approved contents. Appendix B of the CoC contains detailed specifications for the contents of each MPC model, including all of the information contained in the material proposed for deletion. This changes eliminates redundancy in the CoC.

d. This wording change provides clarification in distinguishing between the 125-ton and the 100-ton HI-TRAC transfer casks. The term "types" is too general and subject to misinterpretation. The term "sizes" is more correct for distinguishing between the 100-ton and 125-ton transfer casks.

e. These wording changes provide i) clarification of the major differences between the 100S and 100 overpack designs, ii) flexibility regarding the number of air inlets and outlets for potential future modifications, and iii) clarification by removing redundant terms for the HI-STORM 100 and HI-STORM 100S overpack designs.

Proposed Change No. 3a

This proposed change has been superseded by Proposed Change No. 22 in Revision 1 to this LAR. See Section IV of this document.

Proposed Change No. 4

Certificate of Compliance, Appendix A, SR 3.1.1.1, SR 3.1.1.3 and Table 3-1:

a. Revise Surveillance Requirement (SR) 3.1.1.1 and Table 3-1, and relocate information previously in Table 3-1 to new Table 3-2 as shown in the attached markup CoC to reflect necessary changes in requirements for MPC cavity drying.

b. Revise SR 3.1.1.3 to remove the helium leakage test requirement.

c. Revise the helium backfill requirements in new Table 3-2 (previously located in Table 3-1) as shown in the attached mark-up of the CoC.

Reason for Proposed Changes

a. These proposed changes in MPC cavity drying requirements are necessary as a consequence of higher authorized heat loads and the new peak fuel cladding temperature limit suggested by ISG-11, Revision 2[1]. There are now a variety of requirements and options based on the decay heat load of the MPC and the burnup of fuel being stored (i.e., moderate burnup versus high burnup fuel).

b. This reflects the designation of the MPC as leak tight in accordance with the guidance in ISG-18.

c. This proposed change is a result of lessons learned in the field on implementing the current helium backfill pressure requirement of 29.3 to 33.3 psig. Due to the accuracy of instruments available for performing this activity in then field, more precision was required in establishing the appropriate range in the Technical Specifications.

Justification for Proposed Changes

a. The proposed changes in MPC cavity drying requirements create the necessary controls to ensure the peak fuel cladding temperature limit of 400°C is not exceeded during short term loading operations. They also provide optional requirements (fuel cladding hoop stress calculations) for MPC containing all moderate burnup fuel (≤ 45,000 MWD/MTU) to all the fuel cladding temperature to approach the previous licensing basis limit of 570°C during vacuum drying, for heat loads up to those already licensed in Amendment 1 to the CoC. Any MPC containing one or more high burnup fuel assemblies must be dried using the forced helium dehydration method, in which case the 400°C temperature limit is ensured for all authorized heat loads. See proposed changes to FSAR Section 4.5 in Attachment 5 and Holtec calculation HI-2033054, being provided under separate cover, for details of the thermal analyses.

b. Human factors improvement.

c. The TS requirements for helium backfill more accurately account for the potential range of instrument accuracies in the field, the different MPC cavity drying methods, and the supporting thermal analyses. The thermal analyses evaluate a lower bound helium backfill value that ensures a

---

[1] The modified MPC cavity drying requirements also reflect the fuel cladding hoop stress calculation option to retain the 570°C temperature limit for moderate burnup fuel (≤ 45,000 MWD/MTU). This is expected to be consistent with the soon-to-be-published ISG-11, Revision 3.

sufficient density of helium is in the MPC to promote adequate thermosiphon heat transfer. They also evaluate an upper bound value to ensure the MPC design pressure is not exceeded. See proposed changes to FSAR Section 4.4.1 in Attachment 5 for additional justification.

Proposed Change No. 5

Certificate of Compliance, Appendix A, LCO 3.1.3 and associated Bases in FSAR Appendix 12.A:

Revise this LCO and associated Technical Specification Bases as shown in the attached markup of the CoC and FSAR Appendix 12.A to:

a. Provide appropriate requirements for ensuring MPC cavity bulk helium temperature is less than 200 degrees F prior to re-flooding, instead of the existing "helium gas exit temperature." Revise associated bases in the FSAR accordingly.

b. Change the Completion time of Required Action A.2 from 22 hours to "Immediately."

Reason for Proposed Changes

a. Using a forced helium recirculation system to cool the MPC cavity gas for low decay heat load casks may be unnecessary in the unlikely event that an MPC must be unloaded. This change provides appropriate flexibility for users who may have to unload an MPC with a low decay heat load.

b. This change is required as a result of the new, lower peak fuel cladding temperature limit of 400°C during short-term operating conditions, including unloading operations.

Justification for Proposed Change

a. Depending upon the decay heat in the cask at the time of unloading, it may not be necessary to cool the contained helium with a recirculating helium cooldown system prior to re-flooding with water. The helium temperature of very low decay heat load casks could be less than 200 degrees F at the time of re-flooding with no action required. Alternatively, adequate cooling of the helium inside the MPC may be able to be accomplished by non-intrusive means, such as air or water applied to the outside surface of the MPC.

The bulk temperature of the helium in the MPC and the fuel cladding itself, is predicted using a computational fluid dynamics computer program (FLUENT, FSAR Chapter 4) to license the cask for normal, off-normal, and accident conditions of storage. These same analytical techniques, accepted as the basis for loading operations and long-term fuel storage, can be used to predict the bulk helium temperature of an MPC designated for unloading. The actual characteristics of the MPC contents (i.e., fuel type, presence of non-fuel hardware, time in storage) can be used to conservatively predict the bulk helium temperature prior to re-flooding. The results of that prediction would then be used to determine the appropriate means (if any are necessary) and time frame to cool the bulk helium down to 200°F prior to re-flooding in order to minimize thermal stress in the fuel cladding.

b. The thermal analyses described in FSAR Section 4.5 indicate that there are threshold decay heat loads below which MPCs may be emplaced in the HI-TRAC transfer cask without supplemental cooling. Above these threshold decay heat loads, supplemental cooling is required while in a HI-TRAC transfer cask. FSAR Section 4.5 addresses specific examples of supplemental cooling. However, the particular type of augmented cooling is necessarily site-specific and is left to the user to determine, using the thermal methodologies in the HI-STORM FSAR.

Proposed Change No. 6

Certificate of Compliance, Appendix A, LCOs 3.2.1 and 3.2.3; Action B.1 of LCO 3.1.2; and Section 5.0:

Delete LCOs 3.2.1 and 3.2.3 and associated bases in FSAR Appendix 12.A and replace them with new Technical Specification Program 5.7 for radiation protection, located in CoC Appendix A, Section 5.0. Modify the Required Action in LCO 3.1.2 to conform with this change.

Reason for Proposed Change

The current Required Actions for LCOs 3.2.1 and 3.2.3 do not lead to an end point that results in compliance with the LCO requirements. For example, if dose rates on the HI-TRAC transfer cask exceed one of the LCO 3.2.1 limits, Required Actions A.1 and A.2 of that LCO require the cask user to administratively verify correct fuel loading and to perform an evaluation to verify compliance with 10 CFR 20 and 10 CFR 72, respectively. Once these actions are complete, operations are permitted to continue, yet the cask surface dose rates would remain

out of compliance with the LCO limits. The same logic applies to LCO 3.2.3 for HI-STORM overpack dose rates.

In addition, this change is proposed to be consistent with the guidance of NUREG-1745, "Standard Format and Content for Technical Specifications for 10 CFR Part 72 Cask Certificates of Compliance" and with many plants' Part 50 technical specifications. General licensees' radiation protection programs that implement the ALARA philosophy are considered sufficient to protect operations personnel and the public and to ensure compliance with regulatory dose limits.

The program description also includes specific requirements on determining site-specific cask contact dose rate limits based on the licensee's evaluation performed pursuant to 10 CFR 72.212. These additional requirements provide continued NRC control over certain aspects of any shielding analyses and evaluations performed to demonstrate compliance with off-site dose limits and in support of changes made under the provisions of 10 CFR 72.48.

Justification for Proposed Change

There are no numerical regulatory limits on contact dose rates from a spent fuel storage cask in 10 CFR 72 or 10 CFR 20. For normal and off-normal operations, however, general licensees must demonstrate compliance with 10 CFR 72.104 for dose at the controlled area boundary. Compliance with 10 CFR 72.104 is site-specific, based on the dose rate from reactor operations, contents of the casks, the number of casks at the ISFSI, local meteorology, and the distance to the site boundary. The contact dose rate limits in current LCOs 3.2.1 and 3.2.3 serve no function for licensees in demonstrating compliance with 10 CFR 72.104.

Compliance with surface dose rate limits in the Technical Specifications (TS), or elsewhere, are not a reliable indicator of proper cask loading or consistency with the site-specific off-site dose analysis. Specifically, if a measured cask surface dose rate exceeds the cask TS value, certainly a mis-loading has occurred. However, measuring a surface dose rate less than the limit in no way assures that all contents loaded meet the CoC requirements. This is because the actual contents of a cask loaded at a given general licensee's facility will never match the bounding design basis contents used in the licensing basis shielding analyses. Individual fuel assemblies or non-fuel hardware not meeting the CoC could be loaded with the overall effect on dose rate being insignificant. The administrative controls used to select and document fuel assemblies and non-fuel hardware chosen for loading in a cask (equivalent to those used to store fuel in a plant's spent fuel pool) are the only reliable way to ensure the fuel loading requirements of the CoC are met.

Contact dose rates from the casks are a factor in determining occupational exposures during cask loading operations. Occupational exposure regulatory limits are set by 10 CFR 20 and exposures to personnel are generally controlled to even lower limits through the users' ALARA-based radiation protection programs. The dose rates to personnel from a loaded HI-STORM overpack or HI-TRAC transfer cask are necessarily site-specific, and cask specific, based on the particular contents of the cask. Part 50 licensees are well-versed at handling radioactive containers, many of which emit much higher levels of radiation than a dry storage cask. Therefore, these requirements are more appropriately controlled through a Technical Specification program.

See also the response to RAI Question 10-3 in Attachment 1.

Proposed Change No. 7

Certificate of Compliance, Appendix B, Section 1.0, Definitions; Table 2.1-1, Note 1 in Sections I, IV, V, VII, and VIII; and Note 3 of Table 2.1-8

Revise the definition of NON-FUEL HARDWARE as shown in the attached mark-up of the CoC to include vibration suppressor inserts. Revise the subject notes as shown to allow the storage of vibration suppressor inserts as integral non-fuel hardware that may be stored in the MPC with a fuel assembly.

Reason for Proposed Change

Vibration suppressor inserts have been identified by a number of Holtec's clients as non-fuel hardware that is integral to the fuel assemblies and must be qualified for storage. Vibration suppressor inserts were added by certain fuel vendors as a design feature to address a vibration-induced failure problem in operating reactors.

Justification for Proposed Change

The vibration suppressor inserts contain no fissile material and have been evaluated as activated hardware (BPRAs). See Section 5.2.4 of the proposed FSAR changes (Attachment 5) for additional information. Table 2.1-8 of CoC Appendix B has been modified to include the vibration suppressor inserts with the existing approved fuel insert burnups and cooling times.

Proposed Change No. 8

Certificate of Compliance, Appendix A, LCO 3.3.1; Appendix B, Table 2.1-1, Section IV; and Appendix B, Table 2.1-2:

Increase the maximum authorized initial enrichment for PWR damaged fuel and fuel debris to 5.0 wt.% as shown in the attached mark-ups of the CoC

Reason for Proposed Change

PWR users have damaged fuel and fuel debris up to 5 wt.% initial enrichment that needs to be placed into dry storage.

Justification for Proposed Change

Damaged fuel and fuel debris up to 5.0 wt.% ^{235}U has been evaluated and found to be acceptable for loading in the PWR MPCs. See Sections 6.4.4.2.5 and 6.4.4.2.6 in the attached proposed FSAR changes for detailed justification.

Proposed Change No. 9

Deleted

Proposed Change No. 10

Certificate of Compliance, Appendix B, new proposed Section 2.3:

Provide a process for the certificate holder to request and receive NRC approval of case-specific alternatives to the cask contents on behalf of a cask user, as shown in the attached markup of the CoC.

Reason for Proposed Change

To provide necessary flexibility for the NRC to review and approve, upon request by Holtec, small deviations from the cask contents limits in the CoC that have been shown to have little or no safety significance. This change process will eliminate the need for licensees to request exemptions from the regulations or significantly delay their fuel loading schedules for small, non-safety significant changes to the CoC cask contents on a case-specific basis.

Justification for Proposed Change

This proposed change is consistent with NUREG-1745, "Standard Format and Content for Technical Specifications for 10 CFR Part 72 Cask Certificates of

Compliance." NUREG-1745 also suggests moving some of the cask contents limits to the FSAR. However, Holtec has chosen to leave all cask contents parameters the same as currently found in the CoC (although some of the values for those parameters are proposed to be changed in this amendment request). This is conservative since a CoC amendment would still be necessary to permanently change any of the parameters (or the values) in the CoC, including any case-specific changes approved by the NRC under this process. The flexibility permitted by this proposed change is appropriate because there may be instances where cask users' fuel or other contents have slight deviations from the limits in the CoC, where there is little or no safety concern with granting the deviation on a case-specific basis.

This change process allows Holtec to support our customers' fuel loading schedules without the users having to request exemptions from the regulations for small deviation from the approved contents section of the CoC. Holtec will then pursue a permanent change to the parameter or value on a normal priority schedule, using the CoC amendment process. Overall, this change process eliminates unnecessary regulatory burden in an area of little or no safety significance, but retains the requirement for prior NRC approval of cask contents changes.

Proposed Change No. 11

Certificate of Compliance, Appendix A, LCO 3.1.2 - Required Actions B.2.1 and B.2.2, and SR 3.1.2.1; and Appendix B, Tables 2.1-1 and 2.1-4 through 2.1-7:

Revise Table 2.1-1, delete Tables 2.1-4 through 2.1-7, and create new Section 2.4 in Appendix B as shown in the attached markup of the CoC to provide new (higher) limits for fuel assembly decay heat, and for burnup as a function of decay heat, enrichment, cooling time, and fuel array/class. Modify the Completion Times for Required Actions B 3.2.1 and B 3.2.2 to reflect the revised blocked duct accident analysis. Modify the acceptance criterion for temperature measurement in SR 3.1.2.1 to be 145°F to conform to these changes. See also Proposed Change 15a.

Reason for Proposed Changes

Based on user input, the existing limits unnecessarily penalize certain fuel types due to only grouping by reactor type (PWR or BWR). The previous limits did not meet the entire spectrum of users' needs to store fuel with higher heat emission rates. Other changes are conforming changes made necessary by the higher heat loads.

Justification for Proposed Change

Thermal

The previous burnup and decay heat limits were distinguished only by PWR or BWR fuel type for each MPC model. The revised limits are specified by fuel array/class and MPC model to provide an improved specificity for the various fuel types. The new limits appropriately reflect the ability of the HI-STORM 100 System to reject more heat than previously authorized, while still retaining adequate margins to the various limits (see revised FSAR Section 4.4 in Attachment 5). Placing the higher burnup fuel in the central core of the basket, surrounded by lower burnup fuel reduces the overall dose to personnel and the public from ISFSI operations due to the self-shielding phenomenon of the fuel assemblies. See proposed revisions to FSAR Section 4.4.1.1.9 (Attachment 5) for additional justification. The permissible fuel cladding temperature limit used to determine the maximum cask heat loads are consistent with ISG-11, Revision 2. (see also Proposed Change Number 15a).

Shielding

The shielding analysis in Chapter 5 of the FSAR has been modified to reflect the changes in the allowable burnup and cooling times by changing all dose rate calculations using the design basis fuel assemblies, B&W15x15 and GE7x7. The source terms have also been changed appropriately. The choice of design basis fuel assembly for the shielding analysis remains the same. Section 5.2 has been modified slightly to address the fact that the different array classes have different burnup and cooling times as a result of this change. The design basis assemblies remain valid because the analysis in Chapter 5 uses the maximum burnup from all array classes for a given cooling time. This is described in Section 5.1 of the proposed Revision 2 FSAR (Attachment 5).

In conjunction with calculating the allowable burnups for the different array classes, Tables 5.2.25 and 5.2.26 have been slightly modified. In Table 5.2.25, the pellet diameter and resulting uranium loadings of three of the assemblies have been increased to be consistent with the maximum permissible value in the CoC. In Table 5.2.26, the 9x9 assembly has been modified to reflect the 9x9 array class which now has the highest decay heat load for the specified burnup and cooling time in that table.

In the calculation of the allowable burnups for the different array/classes an additional change was made in the shielding analysis. Rather than use the same power level of 40 MW/MTU for all array/classes, the power per assembly was calculated for each reactor type and increased by 10 or 20% to account for

potential power uprates for the PWR and BWR plants, respectively. Tables 5.2.25 and 5.2.26 reflect this change as does Section 5.2.5 in Attachment 5.

Accidents

Placing the relatively hotter fuel assemblies in the center of the MPC basket by design obviates the need to analyze a fuel assembly mis-loading accident. This is because, as described in FSAR Section 4.4.1.1.9, the inadvertent loading of a hotter fuel assembly on the periphery is actually more advantageous from a thermal perspective (i.e., the heat rejection of the cask system would be better with hotter assemblies on the periphery of the fuel basket). From a shielding perspective, the mis-loading of an assembly would result in a small, localized increase in the contact dose rate on the cask and would be imperceptible at the controlled area boundary.

The 100% air duct blockage accident was re-analyzed for the design basis heat loads to yield two heat-load-dependent Completion Times in the TS. This re-analysis is discussed in FSAR Section 11.2.13 (Attachment 5). The results of the Amendment 1 analyses show that, for heat loads $\leq$ 27.74 kW (the Amendment 1 maximum heat load), no components reach their short term temperature limit over the 72-hour duration of the analysis. For a bounding MPC-68 heat load of 35.5 kW in Amendment 2, no components reach their short term temperature limit for 24 hours. The Completion Times for Required Actions B.2.1 and B.2.2 of this LCO have been revised to reflect these results. Note also that the basis for the revised Completion Times no longer includes the assumption that the complete blockage of all inlet ducts occurs immediately after completion of the last surveillance. This change is consistent with the bases for Completion Times in power reactor technical specifications, which are developed assuming that the degraded condition begins at the time the component or system is declared inoperable[2]. It is not required to assume the component or system has been inoperable since the last successful completion of the Surveillance Requirement. See also the Bases for LCO 3.1.2 in FSAR Appendix 12.A (Attachment 5).

Proposed Change No. 12

Certificate of Compliance, Appendix B, Tables 2.1-2 and 2.1-3:

Revise the maximum allowable uranium masses for certain fuel assemblies as shown in the attached markup to the CoC. These changes are made to maintain consistency with the revised shielding analyses in Chapter 5.

---

[2] This is not to say the actual point of inoperability is not an issue to be investigated through the root cause evaluation conducted in accordance with the corrective action program, if necessary.

Reason for Proposed Changes

As Proposed Change 11 discusses, the allowable burnups are being calculated in this LAR for different array classes rather than a single PWR or BWR array/class. Explicit analysis has been performed to determine the allowable burnups for each array/class. The change to the allowable uranium mass loadings is being made to reflect the actual uranium mass loadings used in the calculation of the allowable burnups for each array/class.

Justification for Proposed Change

The allowable burnups as a function of cooling time are calculated using the allowable decay heat as an input. Source term calculations are performed to determine the burnup that produces the allowable decay heat for a specified cooling time. One of the key inputs in the source term calculations is the uranium mass loading. The maximum uranium mass loading has historically been specified in the CoC for the HI-STORM system and has always been a quantity derived from the shielding analysis. Therefore, this change is being made to maintain the uranium mass loading values consistent with the shielding analysis used to determine the allowable burnups. The maximum uranium mass loadings in the CoC are not based on the criticality analysis or the thermal analysis and changes to these mass values do not reflect changes in the criticality or thermal areas.

Proposed Change No. 13

Certificate of Compliance, Appendix B, Table 2.1-8:

Revise the maximum allowable burnup for non-fuel hardware inserts as shown in the attached markup to the CoC. These changes are made to maintain consistency with the revised shielding analyses in Chapter 5.

Reason for Proposed Changes

Feedback from our clients has indicated that the allowable burnups versus cooling time for some of the non-fuel hardware is unnecessarily restrictive. Therefore, the allowable burnups for a given cooling time are proposed to be increased for non-fuel hardware inserts.

Justification for Proposed Change

The allowable burnups for the non-fuel hardware are derived from the shielding analysis where a maximum activity of Cobalt-60 is specified for the non-fuel hardware and the burnups are chosen at a given cooling time to assure that the calculated Cobalt-60 activity remains less than the maximum value used in the shielding evaluation. In order to increase the burnups for the non-fuel hardware inserts, the maximum permissible Cobalt-60 activity was increased as identified in Section 5.2.4 and Table 5.2.31 (Attachment 5). The dose rates reported in Chapter 5 of the FSAR were modified to account for this increase in source term.

Proposed Change No. 14

Certificate of Compliance, Appendix B, Section 3.3 and Table 3-1:

a. Change "Exceptions" to "Alternatives" throughout the section.

b. Revise Section 3.3 as shown in the attached mark-up of the CoC to clarify the ASME Code Edition of record for the HI-STORM 100 System. This clarification is proposed to allow the latest effective versions of ASME Sections V and IX to govern the performance of non-destructive examination (NDE) and welding, respectively.

c. Add the new and revised ASME Code alternatives as shown in the attached markup of the CoC.

d. Add "on a case-specific basis" to the requirements related to alternatives to the Code as shown in the attached markup of the CoC.

e. In the second paragraph of the justification for the alternative to Code Article NB-6111, change "process" to "results" and add "relevant" before "findings."

Reason and Justification for Proposed Changes

a. This is an editorial change to make the CoC agree with the regulatory guidance terminology contained in ISG-10.

b. Code Sections V and IX are periodically revised by the ASME to more closely reflect the state of the art in NDE and welding. It is prudent to require the performance of these activities to be in accordance with the latest techniques endorsed by ASME. This change does not affect the design or analysis of the storage system in any manner and is consistent with the current practice of the fabricator of the components governed by the Code. A requirement has been added to the FSAR and CoC for the certificate holder to perform a Code reconciliation prior to the fabricator's adoption of a later edition of Section V or IX.

c. These new and revised Code alternatives are needed to reflect the design drawings and are identical to those previously reviewed and approved by the NRC under separate cover for certain serial number cask components. See NRC letters to Holtec dated March 5th and March 7th, 2002.

d. Based on ISG-10, the intent of this flexibility is to authorize additional Code alternatives on a case-specific basis. This change provides the necessary clarification.

e. This is an editorial change to make the CoC agree with the regulatory guidance terminology contained in ISG-4.

Proposed Change No. 15

Certificate of Compliance, Appendix B, Section 3.5:

Revise the text in Appendix B, Section 3.5.1 as shown in the attached markup to the CoC. These changes are made to maintain consistency with similar wording in CoC Appendix A, Section 5.5.

Reason and Justification Proposed Change

This proposed change clarifies the text to state that the Cask Transfer Facility design criteria requirements do not apply to lifting devices integral to structures governed by the regulation of 10 CFR 50. Our users have stated that the use of the word "outside" as currently written in Section 3.5.1 could be misconstrued to mean anywhere "outdoors", which could include outdoor cranes integral to the Part 50 facility and governed by Part 50 regulatory requirements. This is not the intent of this CoC requirement. The intent of the requirement is to distinguish between 10 CFR Part 50 and Part 72 jurisdiction.

Proposed Change No. 15a

Certificate of Compliance, Appendix A, LCOs 3.1.1, 3.1.2, 3.1.3, and Section 5.6; and Appendix B, Section 1.0, Section 2.1.2, Section 2.1.3, Tables 2.1-1 through 2.1-3, Tables 2.4-4 through 2.4-8, and new Section 3.4.10:

Revise the affected portions of the referenced CoC sections and tables to reflect incorporation of the review guidance contained in ISG-11.

Reason and Justification Proposed Changes

These changes reflect the necessary modifications to the CoC to adopt the revised review guidance contained in ISG-11, Revision 2. The changes to the CoC are consistent with the guidance with regard to the authorization for storage of any fuel cladding material previously approved by NRR for use in a commercial reactor, the elimination of fuel cladding oxidation thickness as a criterion for classifying fuel as damaged, the elimination of the confinement source term penalty factors for high burnup fuel, and the use of a single temperature limit for long-term storage and short-term operating conditions (e.g., vacuum drying). The supporting justification for these changes is contained in proposed changes to FSAR Chapter 4, with conforming changes in FSAR Chapters 1, 2, 5, 8, 10 and 12, and in the thermal-hydraulic calculation package, HI-2033054.

SECTION II – PROPOSED CHANGES TO THE FSAR

Proposed Change No. 16

Changes to FSAR Chapter 2, Tables 2.2.1 and 2.2.3:

a. Revise the off-normal MPC internal design pressure from 100 psig to 110 psig as shown in FSAR Table 2.2.1 (Attachment 5).

b. Revise the normal temperature limit for the overpack lid top plate as shown in FSAR Table 2.2.3 from 350°F to 450°F in the attached proposed FSAR markups (Attachment 5).

Reason for Proposed Change

a and b. Increasing these pressure and temperature limits is necessary to support the increased thermal loads being proposed elsewhere in this amendment request.

Justification for Proposed Change

a. The off-normal condition is defined as the upset or Level B condition in the ASME Code for which the allowable stresses are 10% greater than for normal service conditions. Therefore, the associated permissible pressure may be increased by 10%.

b. The higher lid top plate temperature has been evaluated and found to be acceptable. The overpack lid lifting evaluations contained in FSAR Section 3.4.3.7 address the adequacy of the threaded holes used to lift the lid for placement on the loaded overpack. This evolution occurs with the lid at ambient temperature. Therefore, this evaluation is unaffected by this change.

The change in the design lid material temperature does not affect the vertical drop or tipover analyses.

The missile impact on the top lid was re-evaluated for the increased lid plate design temperature. The allowable stress is slightly reduced and the safety factor is reduced accordingly, but still shows a safety margin of 33 percent. See proposed FSAR Section 3.4.8.1 (Attachment 5) for more detailed discussion of this event.

Proposed Change No. 17

Changes to FSAR Chapter 3 and Chapter 7

Delete Appendices 3.B thru 3.AS in their entirety and re-locate this information to the supporting calculation package. Create new FSAR Subsections 3.4.4.3.1.8 and 3.4.4.3.1.9 to address some of these calculation results.

Reason and Justification for Proposed Change

These detailed calculations are of a level of detail that is not appropriate for the FSAR. The supporting calculation packages have been updated as necessary to include the appropriate information deleted from the FSAR appendices.

Proposed Change No. 18

This proposed change is deleted in light of the issuance of ISG-18 since the original submittal of this LAR. Please see the response to RAI Question 7-1 in Attachment 1 to this submittal.

Proposed Change No. 19

Change to FSAR Chapter 11

In Section 11.1.4.3, remove discussion of the three-ducts blocked condition. Remove results currently presented in Table 11.1.2

Reason and Justification for Proposed Change

The three-ducts blocked condition was previously included in the FSAR for comparison purposes only. This comparison is now being removed. The design basis off-normal condition is two ducts blocked and the design basis accident condition (FSAR Section 11.2.13) is all ducts blocked.

Proposed Change No. 20

Changes to FSAR Chapter 13

Replace the detailed discussion of the Holtec QA program throughout Chapter 13 with a short discussion of the program and a reference to the current NRC-approved QA program in Section 13.0 (see Attachment 5). Sections 13.1 through 13.3 and 13.5 are deleted in their entirety. Section 13.4 and Appendices 13.A and

13.B were removed in FSAR Revision 1 after Revision 13 of the Holtec QA Program Manual was approved by the NRC.

Reason for Proposed Change

To remove redundant information.

Justification for Proposed Change

The NRC has approved Revision 13 of Holtec's QA program under 10 CFR 71 (Approval 71-0784, Rev. 3). Holtec also uses this QA program to control activities important to safety that are performed under 10 CFR 72 as permitted by 10 CFR 72.140(d). Including the same, or similar QA program information in FSAR Chapter 13 is unnecessarily redundant. This change is similar to that approved for other Part 72 general certifications (e.g., Fuel Solutions, Docket 72-1026). In accordance with 10 CFR 72.140(d) The Holtec QA program also meets the supplemental recordkeeping requirements of 10 CFR 72.174 for use under Part 72.

SECTION IV – NEW CHANGES WITH THE RAI RESPONSE

Proposed Change No. 21

Certificate of Compliance, Various Locations

Make the following editorial changes to the CoC:

a. On the first page of the CoC, delete "Inc." from Holtec International's name.

b. In the third paragraph of Section 1.b, change the last word from "dimensions" to "diameter."

c. Condition 5: In the second sentence, change "safety" to "regulatory."

d. Appendix B, Table 2.1-1: In each of the sections for the PWR MPCs (MPC-24, -24E, -24EF,- 32, and –32F), add or modify an item at the end of the section that clarifies that neutron sources are not permitted for storage.

e. Appendix B, Table 2.1-1, Section VI.A.1.h: Delete "and DFC" from the fuel assembly weight entries (two places).

f. Appendix B, Table 2.1-1, Sections VII and VIII: In Note B, change "MPC-24E" and "MPC-32" to "MPC-24EF" and "MPC-32F," respectively.

g. Appendix B, Table 2.4-3, Note 2: Replace "NON-FUEL HARDWARE" with "channels."

Reason and Justification for Proposed Changes

a. Editorial. The legal name of Holtec is "Holtec International, a New Jersey Corporation."

b. Using the term "dimensions" unnecessarily restricts the ability to potentially change the height of the MPC and other cask components under the provisions of 10 CFR 72.48, if the need arises. We believe that the diameter is the only dimension that should be controlled via CoC amendment.

c. The reviews referred to in this sentence are to be conducted pursuant to 10 CFR 50.59 or 10 CFR 72.48. These reviews are regulatory reviews to

ascertain whether prior NRC approval is required before the activity can be implemented. This is not to be confused with the evaluation of the safety of the activity, which is conducted under the appropriate quality assurance process (e.g., design control).

d. This is a clarification. No PWR neutron sources have been certified for storage in the HI-STORM 100 System.

e. Item VI.A.1 addresses storage of intact BWR fuel in MPC-68FF. DFCs are not required for intact fuel storage.

f. Editorial

g. "NON-FUEL HARDWARE" is a defined term in Section 1.0 of Appendix B for PWR fuel inserts. The term does not apply to the BWR MPC-68/68FF. "Channels" is the appropriate term.

Proposed Change No. 22

Certificate of Compliance, Condition 11:

Modify the language in CoC Condition 11 as shown in the attached marked up CoC to address component certification and use. This change also prompted a conforming change to Section 1.b in the discussion pertaining to the aluminum heat conduction elements.

Reason for Proposed Change

This change is requested to clarify the intent of this CoC condition as it relates to amended CoCs and hardware certified to different CoC amendments.

Justification for Proposed Change

Over time, licensee users of the HI-STORM 100 System may receive licensed hardware components (MPC, overpack, and transfer cask) fabricated and certified to any of the approved amendments to the CoC. Unless specifically prohibited by the CoC, any component certified to any CoC amendment may be used with any other component certified to any amendment of the CoC, provided the CoC holder has confirmed the design compatibility of each licensed component for the applicable CoC amendment. For example, licensees receive one HI-TRAC transfer cask, which would have been certified to the CoC amendment effective at the time of fabrication. Unless specifically prohibited by the CoC, that HI-TRAC transfer cask may be authorized for use under any later amendment of the CoC

provided the CoC holder has performed the design compatibility assessment and certified to the licensee that this compatibility exists. This change is necessary to address a future potential concern with configuration control and component compatibility if, for example, an MPC is transported to the federal repository and the licensee wishes to re-use the "old" overpack in which that MPC was previously stored.

Proposed Change No. 23

Certificate of Compliance, Appendix A, Table 3-1 and Appendix B, Section 3.6.2.4

Modify the MPC drying acceptance criterion applicable to the use of the Forced Helium Dehydration (FHD) System to include an alternative measurement of gas dew point exiting the MPC to confirm a partial water vapor pressure of 3 torr or less in the MPC.

Reason for Proposed Change

As part of Holtec's prototype deployment of the FHD system at the Trojan Plant site, it was determined that an alternative, more direct measurement of the gas condition exiting the MPC was appropriate to consider.

Justification for Proposed Change

A dew point of the gas exiting the MPC of $\leq$ 22.9°F for $\geq$ 30 minutes corresponds to a partial water vapor pressure of 3 torr, which is the accepted dryness limit for spent fuel storage casks per NUREG-1536, Section 8.V.1.

Proposed Change No. 24

Certificate of Compliance, Appendix B, Table 3-1, "List of ASME Code Alternatives":

a. In the "alternative, justification, & compensatory measures" column for Code Article NB-6111, replace the word "hydrostatically" and "hydrostatic" with "pressure" (two places).

b. In the "alternative, justification, & compensatory measures" column for Code Articles NF-3256 and NF-3266, remove the term "by an '*'."

Reason and Justification for Proposed Changes

a. ASME Section III, Subsection NB, Article NB-6110 requires a pressure test of the vessel. The pressure test may be a hydrotest or, provided certain criteria are met, a pneumatic test. This change is proposed to allow users the option to use the flexibility that the Code already offers for pressure testing vessels. A conforming change to FSAR Table 2.2.15 (ASME Code Alternatives) is also proposed in support of this CoC change. It is not a change to the Code alternative itself, since the Code already allows either type of pressure testing.

b. The type of notation used on the design drawings to indicate "non-NF" welds is not germane to the justification or compensatory measures associated with this Code alternative.

Proposed Change No. 25

CoC Appendix B, Section 3.2.6

Modify the language in this CoC section as shown in the attached marked-up CoC to remove specific reference to fuel spacers.

Reason and Justification for Proposed Change

The intent of the requirement is to ensure the active fuel region of the fuel assemblies is positioned within the neutron absorber region of the fuel storage cell. The method by which this accomplished should be left to the designer.

Proposed Change No. 26

CoC Appendix B, Section 3.4.3

Clarify the manner in which the equation used to determine whether the site may deploy free-standing casks is executed, as shown in the attached marked-up CoC.

Reason for Proposed Change

Use of Zero Period Accelerations (ZPAs) in this equation is unnecessarily conservative and an alternative approach has been requested by a HI-STORM System user. In addition, two criteria must be met with this equation, namely, incipient sliding, where the value of "μ" is the coefficient of friction between the overpack and the ISFSI pad, and incipient tipping, where the value of "μ" is the ratio of the cask radius to the height of the cask center-of-gravity above the ISFSI pad surface.

Justification for Proposed Change

The intent of the equation is to verify that there will be no incipient tipping or sliding of the cask under the site-specific seismic condition at the ISFSI. Therefore, both definitions of "μ" must be evaluated. Use of ZPA values is a bounding approach, but may be overly conservative, particularly for those site where the ISFSI may already be constructed. See proposed changes to FSAR Section 3.4.7.1 for the detailed justification.

Proposed Change No. 27

Certificate of Compliance, Appendix B, Section 3.6.3

Modify the FSAR section numbers called out in this technical specification to state Section 4.4, rather than the detailed subsection numbers.

Reason and Justification for Proposed Change

The level of specificity of the existing section numbers is unnecessary.

Proposed Change No. 28

FSAR Tables 1.D.1 and 2.2.3

Modify the design temperatures of the MPC shell, overpack concrete, and Holtite neutron shield material as shown in the attached markup of FSAR Appendix 1.D and Section 2.2.

Reason and Justification for Proposed Changes

These design temperature increases are necessary as a consequence of the revised thermal analysis, where calculated temperatures exceeded the previous design temperatures. This change expands existing Proposed Change No. 16b.

The increase in the MPC shell normal design temperature has been evaluated and found to be acceptable from a structural perspective (see FSAR Sections 3.1 and 3.4.4.3.1.2 and Table 3.4.6 for the results of the structural evaluations of this change). The increase in the overpack concrete temperature is based on a provision in NUREG-1536, Section 3.V.2.b.i(2)(c)2, which allows a local temperature limit of up to 300°F "if Type II cement is used and aggregates are selected which are acceptable for concrete in this temperature range." The creation of a short-term temperature limit for Holtite-A which is used only in the HI-TRAC transfer cask, is based on test data summarized in Holtec Report HI-

2002396, Revision 3. This report was submitted to the NRC in May, 2003 on Docket 71-9261.

Proposed Change No. 29

FSAR Tables 2.2.6 and 2.2.7:

The above-referenced SAR tables are proposed to be modified to clarify the Code applicability for the MPC basket and basket angle supports. The MPC basket and basket angle supports are governed by ASME III, Subsection NG. This change clarifies that, based on their design function, the basket is considered a core support structure pursuant to Article NG-1121 and the angle supports are considered internal structures pursuant to Article NG-1122.

Reason for Proposed Change

To remove ambiguity regarding the applicability of ASME Section III, Subsection NG, Article NG-1120 to these components.

Justification for Proposed Change

Article NG-1121 defines core support structures as "those structures or parts of structures which are designed to provide direct [emphasis added] support or restraint of the core (fuel and blanket assemblies) within the reactor pressure vessel. Structures which support or restrain the core only after the postulated failure of core support structures are considered to be internal structures."

Article NG-1122 defines internal structures as "all structures within the reactor pressure vessel other than core support structures."

The MPC fuel basket provides direct support of the fuel assemblies appropriately classified as a core support structure under Article NG-1121. The MPC basket angle supports do not provide direct support of the fuel and are, therefore, classified as internal structures under Article NG-1122.

CERTIFICATE OF COMPLIANCE FOR SPENT FUEL STORAGE CASKS

The U.S. Nuclear Regulatory Commission is issuing this Certificate of Compliance pursuant to Title 10 of the Code of Federal Regulations, Part 72, "Licensing Requirements for Independent Storage of Spent Nuclear Fuel and High-Level Radioactive Waste" (10 CFR Part 72). This certificate is issued in accordance with 10 CFR 72.238, certifying that the storage design and contents described below meet the applicable safety standards set forth in 10 CFR Part 72, Subpart L, and on the basis of the Final Safety Analysis Report (FSAR) of the cask design. This certificate is conditional upon fulfilling the requirements of 10 CFR Part 72, as applicable, and the conditions specified below.

Certificate No.	Effective Date	Expiration Date	Docket Number	Amendment No.	Amendment Date	Package Identification No.
1014	05/31/00	06/01/20	72-1014	42		USA/72-1014

Issued To: (Name/Address)

Holtec International
Holtec Center
555 Lincoln Drive West
Marlton, NJ 08053

Safety Analysis Report Title

Holtec International ~~Inc.,~~ Final Safety Analysis Report for the HI-STORM 100 Cask System
Docket No. 72-1014

CONDITIONS

This certificate is conditioned upon fulfilling the requirements of 10 CFR Part 72, as applicable, the attached Appendix A (Technical Specifications) and Appendix B – (Approved Contents and Design Features), and the conditions specified below:

1. CASK

   a. Model No.: HI-STORM 100 Cask System

   The HI-STORM 100 Cask System (the cask) consists of the following components: (1) interchangeable multi-purpose canisters (MPCs), which contain the fuel; (2) a storage overpack (HI-STORM ~~100 or 100S~~), which contains the MPC during storage; and (3) a transfer cask (HI-TRAC), which contains the MPC during loading, unloading and transfer operations. The cask stores up to 32 pressurized water reactor (PWR), fuel assemblies or 68 boiling water reactor (BWR) fuel assemblies.

   b. Description

   The HI-STORM 100 Cask System is certified as described in the Final Safety Analysis Report (FSAR) and in the U. S. Nuclear Regulatory Commission's (NRC) Safety Evaluation Report (SER) accompanying the Certificate of Compliance. The cask comprises three discrete components: the MPCs, the HI-TRAC transfer cask, and the HI-STORM ~~100 or 100S~~ storage overpack.

   The MPC is the confinement system for the stored fuel. It is a welded, cylindrical canister with a honeycombed fuel basket, a baseplate, a lid, a closure ring, and the canister shell. It is made entirely of stainless steel except for the neutron absorbers and optional aluminum heat conduction elements *(AHCEs), which are installed in some early-vintage MPCs.* The canister shell, baseplate, lid, vent and drain port cover plates, and closure ring are the main confinement boundary components. The honeycombed basket, which is equipped with Boral neutron absorbers, provides criticality control.

1. b. Description (continued)

There are ~~seven~~ *eight* types of MPCs: the MPC-24, MPC-24E, MPC-24EF, MPC-32, *MPC-32F*, MPC-68, MPC-68F, and MPC-68FF. *The number suffix indicates the maximum number of fuel assemblies permitted to be loaded in the MPC.* ~~The MPC-24 and MPC-32 hold up to 24 and 32 PWR fuel assemblies, respectively, that must be intact. The MPC-24E holds up to 24 PWR fuel assemblies, up to four of which may be classified as damaged fuel assemblies. The MPC-24EF holds up to 24 PWR fuel assemblies, up to four of which may be classified as damaged fuel assemblies or in the form of fuel debris. The MPC-68 holds up to 68 BWR fuel assemblies that may be intact or damaged (i.e., with known or suspected cladding defects greater than hairline cracks or pinholes). The number of damaged fuel assemblies is limited to sixteen unless they are Dresden Unit 1 or Humboldt Bay fuel assemblies. The MPC-68F holds up to 68 Dresden Unit 1 or Humboldt Bay BWR fuel assemblies that may be intact, damaged, with up to four in the form of fuel debris (i.e., with known or suspected defects such as ruptured fuel rods, severed fuel rods, and loose fuel pellets). The MPC-68FF holds up to 68 BWR fuel assemblies, up to sixteen of which may be classified as damaged fuel or fuel debris. A maximum of eight fuel assemblies may be in the form of fuel debris. All fuel to be stored in the HI-STORM 100 System must comply with the limits specified in Appendix B to this CoC.~~ All ~~seven~~ *eight* MPC models have the same external ~~dimensions~~*diameter*.

The HI-TRAC transfer cask provides shielding and structural protection of the MPC during loading, unloading, and movement of the MPC from the spent fuel pool to the storage overpack. The transfer cask is a multi-walled (carbon steel/lead/carbon steel) cylindrical vessel with a water jacket attached to the exterior. Two ~~types~~*sizes* of HI-TRAC transfer casks are available: the 125 ton-HI-TRAC and the 100 ton HI-TRAC. The weight designation is the maximum weight of a loaded transfer cask during any loading, unloading or transfer operation. Both transfer cask ~~types~~*sizes* have identical cavity diameters. The 125 ton HI-TRAC transfer cask has thicker lead and water shielding and larger outer dimensions than the 100 ton HI-TRAC transfer cask.

The HI-STORM 100 or 100S storage overpack provides shielding and structural protection of the MPC during storage. The HI-STORM 100S is a ~~shortened version~~ *variation* of the *HI-STORM* 100 *overpack design that includes* with a modified lid ~~design incorporating~~ *which incorporates* the air outlet ducts into the lid, *allowing the overpack body to be shortened*. The overpack is a heavy-walled steel and concrete, cylindrical vessel. Its side wall consists of plain (un-reinforced) concrete that is enclosed between inner and outer carbon steel shells. The overpack has *a minimum of* four air inlets at the bottom and *a minimum of* four air outlets at the top to allow air to circulate naturally through the cavity to cool the MPC inside. The inner shell has channels attached to its interior surface to guide the MPC during insertion and removal, provide a flexible medium to absorb impact loads, and allow cooling air to circulate through the overpack. A loaded MPC is stored within the HI-STORM 100 or 100S storage overpack in a vertical orientation. The HI-STORM 100A is a variant of the HI-STORM 100 family and is outfitted with an extended baseplate and gussets to enable the overpack to be anchored to the concrete storage pad in high seismic applications. The HI-STORM 100A applies to both the ~~standard (HI-STORM 100)~~ and ~~short (HI-STORM 100S)~~ overpacks that are classified as the HI-STORM 100A and HI-STORM 100SA, respectively.

2. OPERATING PROCEDURES

Written operating procedures shall be prepared for cask handling, loading, movement, surveillance, and maintenance. The user's site-specific written operating procedures shall be consistent with the technical basis described in Chapter 8 of the FSAR.

3. ACCEPTANCE TESTS AND MAINTENANCE PROGRAM

Written cask acceptance tests and maintenance program shall be prepared consistent with the technical basis described in Chapter 9 of the FSAR.

4. QUALITY ASSURANCE

Activities in the areas of design, purchase, fabrication, assembly, inspection, testing, operation, maintenance, repair, modification of structures, systems and components, and decommissioning that are important to safety shall be conducted in accordance with a Commission-approved quality assurance program which satisfies the applicable requirements of 10 CFR Part 72, Subpart G, and which is established, maintained, and executed with regard to the cask system.

5. HEAVY LOADS REQUIREMENTS

Each lift of an MPC, a HI-TRAC transfer cask, or a HI-STORM 100 or 100S overpack must be made in accordance to the existing heavy loads requirements and procedures of the licensed facility at which the lift is made. A plant-specific safety review (under 10 CFR 50.59 or 10 CFR 72.48, if applicable) is required to show operational compliance with existing plant specific heavy loads requirements. Lifting operations outside of structures governed by 10 CFR Part 50 must be in accordance with Section 5.5 of Appendix A and/or Sections 3.4.6 and Section 3.5 of Appendix B to this certificate, as applicable.

6. APPROVED CONTENTS

Contents of the HI-STORM 100 Cask System must meet the fuel specifications given in Appendix B to this certificate.

7. DESIGN FEATURES

Features or characteristics for the site, cask, or ancillary equipment must be in accordance with Appendix B to this certificate.

8. CHANGES TO THE CERTIFICATE OF COMPLIANCE

The holder of this certificate who desires to make changes to the certificate, which includes Appendix A (Technical Specifications) and Appendix B (Approved Contents and Design Features), shall submit an application for amendment of the certificate.

9. SPECIAL REQUIREMENTS FOR FIRST SYSTEMS IN PLACE

The heat transfer characteristics of the cask system will be recorded by temperature measurements for the first HI-STORM Cask Systems (for each thermally unique MPC basket design - MPC-24/24E/24EF, MPC-32/32F, and MPC-68/68F/68FF) placed into service by any user with a heat load equal to or greater than 10 kW. An analysis shall be performed that demonstrates the temperature measurements validate the analytic methods and predicted thermal behavior described in Chapter 4 of the FSAR.

Validation tests shall be performed for each subsequent cask system that has a heat load that exceeds a previously validated heat load by more than 2 kW (e.g., if the initial test was conducted at 10 kW, then no additional testing is needed until the heat load exceeds 12 kW). No additional testing is required for a system after it has been tested at a heat load equal to or greater than 16 kW.

Letter reports summarizing the results of each validation test shall be submitted to the NRC in accordance with 10 CFR 72.4. Cask users may satisfy these requirements by referencing validation test reports submitted to the NRC by other cask users.

10. PRE-OPERATIONAL TESTING AND TRAINING EXERCISE

A dry run training exercise of the loading, closure, handling, unloading, and transfer of the HI-STORM 100 Cask System shall be conducted by the licensee prior to the first use of the system to load spent fuel assemblies. The training exercise shall not be conducted with spent fuel in the MPC. The dry run may be performed in an alternate step sequence from the actual procedures, but all steps must be performed. The dry run shall include, but is not limited to the following:

a. Moving the MPC and the transfer cask into the spent fuel pool.

b. Preparation of the HI-STORM 100 Cask System for fuel loading.

c. Selection and verification of specific fuel assemblies to ensure type conformance.

d. Loading specific assemblies and placing assemblies into the MPC (using a dummy fuel assembly), including appropriate independent verification.

e. Remote installation of the MPC lid and removal of the MPC and transfer cask from the spent fuel pool.

f. MPC welding, NDE inspections, ~~hydrostatic~~ *pressure* testing, draining, moisture removal (by vacuum drying or forced helium dehydration, as applicable), *and* helium backfilling. ~~and leakage testing~~. (A mockup may be used for this dry-run exercise.)

a. Transfer cask upending/downending on the horizontal transfer trailer or other transfer device, as applicable to the site's cask handling arrangement.

h. Transfer of the MPC from the transfer cask to the overpack.

i. Placement of the HI-STORM 100 Cask System at the ISFSI.

j. HI-STORM 100 Cask System unloading, including cooling fuel assemblies, flooding MPC cavity, removing MPC lid welds. (A mockup may be used for this dry-run exercise.)

11. AUTHORIZATION

The HI-STORM 100 Cask System, which is authorized by this certificate, is hereby approved for general use by holders of 10 CFR Part 50 licenses for nuclear reactors at reactor sites under the general license issued pursuant to 10 CFR 72.210, subject to the conditions specified by 10 CFR 72.212, and the attached Appendix A and Appendix B. ~~All~~*The* HI-STORM 100 Cask Systems ~~must~~ *may* be fabricated and used in accordance with *any approved amendment to* CoC No. 1014 *listed in 10 CFR 72.214. Each of the licensed HI-STORM 100 System components (i.e., the MPC, overpack, and transfer cask), if fabricated in accordance with different CoC amendments, may be used with one another provided the CoC does not specifically prohibit their use with each other, and a design compatibility assessment is performed by the CoC holder.* ~~Amendment No. 1; except that general licensees may use the HI-STORM 100 Cask Systems that were fabricated in accordance with the original CoC.~~

FOR THE U. S. NUCLEAR REGULATORY COMMISSION

E. William Brach, Director
Spent Fuel Project Office
Office of Nuclear Material Safety
and Safeguards

Attachments:
1. Appendix A
2. Appendix B

CERTIFICATE OF COMPLIANCE NO. 1014

APPENDIX A

TECHNICAL SPECIFICATIONS

FOR THE HI-STORM 100 CASK SYSTEM

TABLE OF CONTENTS

3.1 SFSC INTEGRITY

3.1.1 Multi-Purpose Canister (MPC)

LCO 3.1.1 The MPC shall be dry and helium filled.

APPLICABILITY: During TRANSPORT OPERATIONS and STORAGE OPERATIONS.

ACTIONS

NOTE

Separate Condition entry is allowed for each MPC.

CONDITION	REQUIRED ACTION	COMPLETION TIME
A. MPC cavity vacuum drying pressure or demoisturizer exit gas temperature limit not met.	A.1 Perform an engineering evaluation to determine the quantity of moisture left in the MPC. AND A.2 Develop and initiate corrective actions necessary to return the MPC to an analyzed condition.	7 days 30 days
B. MPC helium backfill limit not met.	B.1 Perform an engineering evaluation to determine the impact of helium differential. AND B.2 Develop and initiate corrective actions necessary to return the MPC to an analyzed condition.	72 hours 14 days

ACTIONS
(continued)

CONDITION	REQUIRED ACTION	COMPLETION TIME
~~C. MPC helium leak rate limit not met.~~	~~C.1 Perform an engineering evaluation to determine the impact of increased helium leak rate on heat removal capability and offsite dose.~~ ~~AND~~ ~~C.2 Develop and initiate corrective actions necessary to return the MPC to an analyzed condition.~~	~~24 hours~~ ~~7 days~~
C. Required Actions and associated Completion Times not met.	C.1 Remove all fuel assemblies from the SFSC.	30 days

SURVEILLANCE REQUIREMENTS

SURVEILLANCE		FREQUENCY
SR 3.1.1.1	~~For those MPCs containing all moderate burnup (≤ 45,000 MWD/MTU) fuel assemblies, verify MPC cavity vacuum drying pressure is within the limit specified in Table 3-1 for the applicable MPC model.~~ ~~OR~~ ~~For those MPCs containing fuel assemblies of any authorized burnup, while using the recirculating helium method to dehydrate the MPC cavity, verify that the gas temperature exiting the demoisturizer is ≤ 21°F for ≥ 30 minutes.~~ *Verify that the MPC cavity has been dried in accordance with the applicable limits in Table 3-1.*	Once, prior to TRANSPORT OPERATIONS
SR 3.1.1.2	Verify MPC helium backfill ~~density or pressure~~ *quantity* is within the limit specified in Table ~~3-1~~2 for the applicable MPC model.	Once, prior to TRANSPORT OPERATIONS
~~SR 3.1.1.3~~	~~Verify that the total helium leak rate through the MPC lid confinement weld and the drain and vent port confinement welds is less than the limit specified in Table 3-1 for the applicable MPC model.~~	~~Once, prior to TRANSPORT OPERATIONS~~

3.1 SFSC INTEGRITY

3.1.2 SFSC Heat Removal System

LCO 3.1.2 The SFSC Heat Removal System shall be operable

APPLICABILITY: During STORAGE OPERATIONS.

ACTIONS

NOTE

Separate Condition entry is allowed for each SFSC.

CONDITION	REQUIRED ACTION	COMPLETION TIME
A. SFSC Heat Removal System inoperable.	A.1 Restore SFSC Heat Removal System to operable status.	8 hours
B. Required Action A.1 and associated Completion Time not met.	B.1 ~~Perform SR 3.2.3.1.~~ *Measure SFSC dose rates in accordance with the Radiation Protection Program.*	Immediately and once per 12 hours thereafter
	AND	
	B.2.1 Restore SFSC Heat Removal System to operable status.	4864 hours, *if MPC heat load is ≤ 28.74 kW* OR *16 hours, if MPC heat load is > 28.74 kW*
	OR	
	B.2.2 Transfer the MPC into a TRANSFER CASK.	4864 hours, *if MPC heat load is ≤ 28.74 kW* OR *16 hours, if MPC heat load is > 28.74 kW*

SURVEILLANCE REQUIREMENTS

SURVEILLANCE		FREQUENCY
SR 3.1.2.1	Verify all OVERPACK inlet and outlet air ducts are free of blockage. OR For OVERPACKS with installed temperature monitoring equipment, verify that the difference between the average OVERPACK air outlet temperature and ISFSI ambient temperature is ≤ ~~126~~*145*°F.	24 hours 24 hours

3.1 SFSC INTEGRITY

3.1.3 Fuel Cool-Down

LCO 3.1.3 The MPC *cavity bulk* helium ~~exit~~ temperature shall be ≤ 200° F

NOTE

The LCO is only applicable to wet UNLOADING OPERATIONS.

APPLICABILITY: UNLOADING OPERATIONS prior to re-flooding.

ACTIONS

NOTE

Separate Condition entry is allowed for each MPC.

CONDITION	REQUIRED ACTION	COMPLETION TIME
A. MPC *cavity bulk* helium ~~gas exit~~ temperature not within limit.	A.1 Establish MPC *cavity bulk* helium ~~gas exit~~ temperature within limit.	Prior to initiating MPC re-flooding operations
	AND	
	A.2 Ensure adequate heat transfer from the MPC to the environment	~~22 hours~~ *Immediately*

SURVEILLANCE REQUIREMENTS

SURVEILLANCE		FREQUENCY
SR 3.1.3.1	~~Verify~~*Ensure via analysis or direct measurement of MPC exit gas temperature that* MPC *cavity bulk* helium ~~gas exit~~ temperature *is* within limit.	Prior to MPC re-flooding operations.

3.2 ~~ISFSI RADIATION PROTECTION~~ *Deleted.*

3.2.1 ~~TRANSFER CASK Average Surface Dose Rates~~ *Deleted.*

LCO 3.2.1 *Deleted.* ~~The average surface dose rates of each TRANSFER CASK shall not exceed:~~

~~a. 125 Ton TRANSFER CASK~~

~~i. 220 mrem/hour (neutron + gamma) on the side;~~

~~ii. 60 mrem/hour (neutron + gamma) on the top~~

~~b. 100 Ton TRANSFER CASK~~

~~i. 1500 mrem/hour (neutron + gamma) on the side;~~

~~ii. 315 mrem/hour (neutron + gamma) on the top~~

~~APPLICABILITY: During TRANSPORT OPERATIONS.~~

~~ACTIONS~~

~~NOTE~~

~~Separate Condition entry is allowed for each TRANSFER CASK.~~

~~CONDITION~~	~~REQUIRED ACTION~~	~~COMPLETION TIME~~
~~A. TRANSFER CASK average surface dose rate limits not met.~~	~~A.1 Administratively verify correct fuel loading.~~	~~24 hours~~
	~~AND~~	
	~~A.2 Perform a written evaluation to verify compliance with the ISFSI offsite radiation protection requirements of 10 CFR Part 20 and 10 CFR Part 72.~~	~~48 hours~~

~~(continued)~~

~~ACTIONS~~
~~(continued)~~

~~CONDITION~~	~~REQUIRED ACTION~~	~~COMPLETION TIME~~
~~B. Required Action and associated Completion Time not met.~~	~~B.1 Remove all fuel assemblies from the TRANSFER CASK~~	~~30 days~~

~~SURVEILLANCE REQUIREMENTS~~

~~SURVEILLANCE~~		~~FREQUENCY~~
~~SR 3.2.1.1~~	~~Verify average surface dose rates of the TRANSFER CASK loaded with an MPC containing fuel assemblies are within limits.~~ ~~A minimum of 12 dose rate measurements shall be taken on the side of the TRANSFER CASK in three sets of four measurements. One measurement set shall be taken approximately at the cask mid-height plane. The second and third measurement sets shall be taken approximately 60 inches above and below the mid-height plane, respectively. Within each set, the measurement locations shall be approximately 90 degrees apart around the circumference of the cask. Dose rates shall be measured between the radial ribs of the water jacket. The average of the 12 dose rate measurements shall be compared to the limit specified in LCO 3.2.1.a.i or b.i, as applicable.~~ ~~A minimum of four (4) top lid dose rates shall be measured at locations approximately half way between the edge of the hole in the top lid and the outer edge of the top lid, 90 degrees apart around the circumference of the top lid. The average of these four dose rates shall be compared to the limit specified in LCO 3.2.1.a.ii or b.ii, as applicable.~~	~~Once, prior to TRANSPORT OPERATIONS~~

~~FIGURE 3.2.1-1 INTENTIONALLY DELETED~~

3.2 ~~SFSG RADIATION PROTECTION~~ *Deleted.*

3.2.3 ~~OVERPACK Average Surface Dose Rates~~ *Deleted.*

LCO 3.2.3 *Deleted.* ~~The average surface dose rates of each OVERPACK shall not exceed:~~

~~a. 50 mrem/hour (neutron + gamma) on the side~~

~~b. 10 mrem/hour (neutron + gamma) on the top~~

~~c. 45 mrem/hour (neutron + gamma) at the inlet and outlet vent ducts~~

~~APPLICABILITY: During STORAGE OPERATIONS.~~

~~ACTIONS~~

~~NOTE~~

~~Separate Condition entry is allowed for each SFSG.~~

~~CONDITION~~	~~REQUIRED ACTION~~	~~COMPLETION TIME~~
~~A. OVERPACK average surface dose rate limits not met.~~	~~A.1 Administratively verify correct fuel loading.~~ ~~AND~~ ~~A.2 Perform a written evaluation to verify compliance with the ISFSI offsite radiation protection requirements of 10 CFR Part 20 and 10 CFR Part 72.~~	~~24 hours~~ ~~48 hours~~
~~B. Required Action and associated Completion Time not met.~~	~~B.1 Remove all fuel assemblies from the SFSG.~~	~~30 days~~

~~SURVEILLANCE REQUIREMENTS~~

~~SURVEILLANCE~~		~~FREQUENCY~~
~~SR 3.2.3.1~~	~~Verify average surface dose rates of the OVERPACK loaded with an MPC containing fuel assemblies are within limits.~~ ~~A minimum of 12 dose rate measurements shall be taken on the side of the OVERPACK in three sets of four measurements. One measurement set shall be taken approximately at the cask mid-height plane, 90 degrees apart around the circumference of the cask. The second and third measurement sets shall be taken approximately 60 inches above and below the mid-height plane, respectively, also 90 degrees apart around the circumference of the cask. The average of the 12 dose rate measurements shall be compared to the limit specified in LCO 3.2.3.a.~~ ~~A minimum of five (5) dose rate measurements shall be taken on the top of the OVERPACK. One dose rate measurement shall be taken at approximately the center of the lid and four measurements shall be taken at locations on the top concrete shield, approximately half way between the center and the edge of the top shield, 90 degrees apart around the circumference of the lid. The average of the 5 dose rate measurements shall be compared to the limit specified in LCO 3.2.3.b.~~ ~~A dose rate measurement shall be taken adjacent to each inlet and outlet vent duct. The average of the 8 inlet and outlet duct dose rates shall be compared to the limit specified in LCO 3.2.3.c.~~	~~Once, within 24 hours after beginning STORAGE OPERATIONS~~

~~Figure 3.2.3-1 INTENTIONALLY DELETED~~

3.3 SFSC CRITICALITY CONTROL

3.3.1 Boron Concentration

LCO 3.3.1 As required by CoC Appendix B, Table 2.1-2, the concentration of boron in the water in the MPC shall meet the following limits for the applicable MPC model *and the most limiting fuel assembly array/class and classification to be stored in the MPC*:

a. MPC-24 with one or more fuel assemblies having an initial enrichment greater than the value in Table 2.1-2 for no soluble boron credit and ≤ 5.0 wt% ^{235}U: ≥ 400 ppmb

b. MPC-24E *or MPC-24EF (all INTACT FUEL ASSEMBLIES)* with one or more fuel assemblies having an initial enrichment greater than the value in Table 2.1-2 for no soluble boron credit and ≤ 5.0 wt% ^{235}U: ≥ 300 ppmb

c. *Deleted.* ~~MPC-32 with all fuel assemblies having an initial enrichment ≤ 4.1 wt% ^{235}U: ≥ 1900 ppmb~~

d. *Deleted.* ~~MPC-32 with one or more fuel assemblies having an initial enrichment > 4.1 and ≤ 5.0 wt% ^{235}U: ≥ 2600 ppmb~~

e. *MPC-24E or MPC-24EF (one or more DAMAGED FUEL ASSEMBLIES or FUEL DEBRIS) with one or more fuel assemblies having an initial enrichment > 4.0 wt% ^{235}U and ≤ 5.0 wt% ^{235} U: ≥ 600 ppmb*

f. *MPC-32/32F: Minimum soluble boron as required by the table below.*

Fuel Assembly Array/Class	*All INTACT FUEL ASSEMBLIES*		*One or more DAMAGED FUEL ASSEMBLIES or FUEL DEBRIS*	
	Initial Enrichment ≤ 4.1 wt% ^{235} U (ppmb)	*Initial Enrichment ≤ 5.0 wt% ^{235} U (ppmb)*	*Initial Enrichment ≤ 4.1 wt% ^{235} U (ppmb)*	*Initial Enrichment ≤ 5.0 wt% ^{235} U (ppmb)*
14x14A/B/C/D/E	*1,300*	*1,900*	*1,500*	*2,300*
15x15A/B/C/G	*1,800*	*2,500*	*1,900*	*2,700*
15x15D/E/F/H	*1,900*	*2,600*	*2,100*	*2,900*
16x16A	*1,300*	*1,900*	*1,500*	*2,300*
17x17A/B/C	*1,900*	*2,600*	*2,100*	*2,900*

APPLICABILITY: During PWR fuel LOADING OPERATIONS with fuel and water in the MPC

AND

During PWR fuel UNLOADING OPERATIONS with fuel and water in the MPC.

ACTIONS

NOTE
Separate Condition entry is allowed for each MPC.

CONDITION	REQUIRED ACTION	COMPLETION TIME
A. Boron concentration not within limit.	A.1 Suspend LOADING OPERATIONS or UNLOADING OPERATIONS.	Immediately
	AND	
	A.2 Suspend positive reactivity additions.	Immediately
	AND	
	A.3 Initiate action to restore boron concentration to within limit.	Immediately

SURVEILLANCE REQUIREMENTS

SURVEILLANCE		FREQUENCY
NOTE This surveillance is only required to be performed if the MPC is submerged in water or if water is to be added to, or recirculated through the MPC.		*Once,* within 4 hours ~~of~~ *prior to* entering the Applicability of this LCO.
SR 3.3.1.1	Verify boron concentration is within the applicable limit using two independent measurements.	AND Once per 48 hours thereafter.

Table 3-1
MPC Cavity Drying Limits (Note 1)

Fuel Burnup (MWD/MTU)	MPC Heat Load (kW)	Method of Moisture Removal (Notes 2 and 3)	Other Requirements (Notes 4 and 5)
All Assemblies ≤ 45,000	≤ 9	VDS or FHD	None
All Assemblies ≤ 45,000	> 9 and ≤ 10	VDS or FHD	If VDS is used, annulus water recirculation is required
All Assemblies ≤ 45,000	> 9 and ≤ 17	VDS or FHD	If VDS is used, fuel cladding hoop stress shall be shown by analysis to be ≤ 90 MPa
All Assemblies ≤ 45,000	> 17 and ≤ 38	FHD	None
One or more assemblies > 45,000	≤ 38	FHD	None

Notes:

1. If the limits in two or more rows apply, the user may choose one set of limits to implement.

2. VDS means Vacuum Drying System. The acceptance criterion for VDS is MPC cavity pressure shall be ≤ 3 torr for ≥ 30 minutes.

3. FHD means Forced Helium Dehydration System. The acceptance criterion for the FHD System is gas temperature exiting the demoisturizer shall be ≤ 21°F for ≥ 30 minutes or gas dew point exiting the MPC shall be ≤ 22.9°F for ≥ 30 minutes .

4. Annulus water recirculation means a constant flow of water through the annulus between the MPC and the HI-TRAC inner shell during moisture removal operations (i.e., beginning prior to 10 torr descending and ending when helium backfill operations commence).

5. Fuel cladding hoop stress calculations may be performed using "best estimate" inputs.

Table 3-~~4~~2
MPC *Helium Backfill* ~~Model-Dependent~~ Limits[1]

MPC MODEL	LIMITS
~~1.~~ MPC-24/24E/24EF	
~~a. MPC Cavity Vacuum Drying Pressure~~	~~≤ 3 torr for ≥ 30 min~~
~~b. MPC Helium Backfill†~~	
i. Cask Heat Load ≤ 27.77 kW (MPC-24) or ≤ 28.17 kW (MPC-24E/EF)	~~0.1212 +0/-10% g-moles/l~~ ~~OR~~ ≥ 29.3 psig and ≤ ~~33.3~~*48.8* psig
ii. Cask Heat Load > 27.77 kW (MPC-24) or > 28.17 kW (MPC-24E/EF)	*≥ 45.2 psig and ≤ 48.8 psig*
~~c. MPC Helium Leak Rate~~	~~≤ 5.0E-6 atm cc/sec (He)~~
~~2.~~ MPC-68/68F/68FF	
~~a. MPC Cavity Vacuum Drying Pressure~~	~~≤ 3 torr for ≥ 30 min~~
~~b. MPC Helium Backfill†~~	
i. Cask Heat Load ≤ 28.19 kW	0.1218 +0/-10% g-moles/l OR ≥ 29.3 psig and ≤ ~~33.3~~*48.8* psig
ii. Cask Heat Load > 28.19 kW	*≥ 45.2 psig and ≤ 48.8 psig*
~~c. MPC Helium Leak Rate~~	~~≤ 5.0E-6 atm cc/sec (He)~~
~~3.~~ MPC-32/32F	
~~a. MPC Cavity Vacuum Drying Pressure~~	~~≤ 3 torr for ≥ 30 min~~
~~b. MPC Helium Backfill Pressure~~[1]	
i. Cask Heat Load ≤ 28.74 kW	≥ 29.3 psig and ≤ ~~33.3~~*48.8* psig
ii. Cask Heat Load > 28.74 kW	*≥ 45.2 psig and ≤ 48.8 psig*
~~c. MPC Helium Leak Rate~~	~~≤ 5.0E-6 atm cc/sec (He)~~

[1] Helium used for backfill of MPC shall have a purity of ≥ 99.995%. Pressure range is at a reference temperature of 70°F

5.0 ADMINISTRATIVE CONTROLS AND PROGRAMS

The following programs shall be established, implemented and maintained.

5.1 Deleted.

5.2 Deleted.

5.3 Deleted.

5.4 Radioactive Effluent Control Program

This program implements the requirements of 10 CFR 72.44(d).

a. The HI-STORM 100 Cask System does not create any radioactive materials or have any radioactive waste treatment systems. Therefore, specific operating procedures for the control of radioactive effluents are not required. Specification 3.1.1, Multi-Purpose Canister (MPC), provides assurance that there are not radioactive effluents from the SFSC.

b. This program includes an environmental monitoring program. Each general license user may incorporate SFSC operations into their environmental monitoring programs for 10 CFR Part 50 operations.

c. An annual report shall be submitted pursuant to 10 CFR 72.44(d)(3).

(continued)

5.5 Cask Transport Evaluation Program

This program provides a means for evaluating various transport configurations and transport route conditions to ensure that the design basis drop limits are met. For lifting of the loaded TRANSFER CASK or OVERPACK using devices which are integral to a structure governed by 10 CFR Part 50 regulations, 10 CFR 50 requirements apply. This program is not applicable when the TRANSFER CASK or OVERPACK is in the FUEL BUILDING or is being handled by a device providing support from underneath (i.e., on a rail car, heavy haul trailer, air pads, etc.).

Pursuant to 10 CFR 72.212, this program shall evaluate the site-specific transport route conditions.

a. For free-standing OVERPACKS and the TRANSFER CASK, the following requirements apply:

   1. The lift height above the transport route surface(s) shall not exceed the limits in Table 5-1 except as provided for in Specification 5.5.a.2. Also, the program shall ensure that the transport route conditions (i.e., surface hardness and pad thickness) are equivalent to or less limiting than either Set A or Set B in HI-STORM FSAR Table 2.2.9.

   2. For site-specific transport route surfaces that are not bounded by either the Set A or Set B parameters of FSAR Table 2.2.9, the program may determine lift heights by analysis based on the site-specific conditions to ensure that the impact loading due to design basis drop events does not exceed 45 g's at the top of the MPC fuel basket. These alternative analyses shall be commensurate with the drop analyses described in the Final Safety Analysis Report for the HI-STORM 100 Cask System. The program shall ensure that these alternative analyses are documented and controlled.

(continued)

5.5 Cask Transport Evaluation Program (continued)

3. The TRANSFER CASK or OVERPACK, when loaded with spent fuel, may be lifted to any height necessary during transportation between the FUEL BUILDING and the CTF and/or ISFSI pad, provided the lifting device is designed in accordance with ANSI N14.6 and has redundant drop protection features.

4. The TRANSFER CASK and MPC, when loaded with spent fuel, may be lifted to those heights necessary to perform cask handling operations, including MPC transfer, provided the lifts are made with structures and components designed in accordance with the criteria specified in Section 3.5 of Appendix B to Certificate of Compliance No. 1014, as applicable.

b. For the transport of OVERPACKS to be anchored to the ISFSI pad, the following requirements apply:

1. Except as provided in 5.5.b.2, user shall determine allowable OVERPACK lift height limit(s) above the transport route surface(s) based on site-specific transport route conditions. The lift heights shall be determined by evaluation or analysis, based on limiting the design basis cask deceleration during a postulated drop event to $\leq$ 45 g's at the top of the MPC fuel basket. Evaluations and/or analyses shall be performed using methodologies consistent with those in the HI-STORM 100 FSAR.

2. The OVERPACK, when loaded with spent fuel, may be lifted to any height necessary during transportation between the FUEL BUILDING and the CTF and/or ISFSI pad provided the lifting device is designed in accordance with ANSI N14.6 and has redundant drop protection features.

(continued)

5.5 Cask Transport Evaluation Program (continued)

Table 5-1

TRANSFER CASK and Free-Standing OVERPACK Lifting Requirements

ITEM	ORIENTATION	LIFTING HEIGHT LIMIT (in.)
TRANSFER CASK	Horizontal	42 (Notes 1 and 2)
TRANSFER CASK	Vertical	None Established (Note 2)
OVERPACK	Horizontal	Not Permitted
OVERPACK	Vertical	11 (Note 3)

Notes:
1. To be measured from the lowest point on the TRANSFER CASK (i.e., the bottom edge of the cask/lid assemblage)
2. See Technical Specification 5.5.a.3 and 4
3. See Technical Specification 5.5.a.3.

(continued)

5.6 ~~Fuel Cladding Oxide Thickness Evaluation Program~~ *Deleted.*

~~A Fuel Cladding Oxide Thickness Evaluation Program shall be developed and implemented to determine the average fuel cladding oxide thickness of high burnup (> 45,000 MWD/MTU) spent nuclear fuel assemblies proposed to be stored in the HI-STORM 100 System. The program may use direct physical measurements or an appropriate predictive methodology with due consideration of all significant variables (e.g., in-core flux, cycle length and number, power history, coolant temperature profile, coolant chemistry, and metallurgy of the fuel cladding material) to determine the average oxide thickness on the fuel cladding. If a predictive methodology is used to determine average fuel cladding oxide thickness, a sufficient number of fuel cladding thickness measurements shall be made to adequately benchmark the methodology.~~

~~In order to classify a high burnup spent fuel assembly as an INTACT FUEL ASSEMBLY, the loss of fuel cladding to oxidation must not increase the fuel cladding inner radius-to-fuel cladding thickness ratio above 10.5 for PWR fuel assemblies or 9.5 for BWR fuel assemblies. The criterion is met if the computed or measured average oxidation layer thickness of all fuel rods is less than the maximum allowable average fuel cladding oxidation thickness. The maximum allowable average fuel cladding oxidation layer thickness shall be calculated using the following formula:~~

$$\cancel{t_{ox} = \left(t_{nom} - \frac{0.5 \times d_{nom} - t_{nom}}{W} \right) \times 25{,}400}$$

~~where:~~

~~t_{ox} = the maximum allowable average oxidation layer thickness (micrometers)~~

~~W = the applicable maximum allowable fuel cladding inner radius-to-fuel cladding thickness ratio (10.5 or 9.5)~~

~~t_{nom} = the nominal, pre-irradiated fuel cladding thickness (inches)~~

~~d_{nom} = the nominal, pre-irradiated fuel cladding outer diameter (inches)~~

~~A high burnup spent fuel assembly shall be considered a DAMAGED FUEL ASSEMBLY if the computed or measured average oxidation layer thickness on any fuel rod exceeds the limit determined above.~~

(continued)

5.7 *Radiation Protection Program*

5.7.1 *Each cask user shall ensure that the Part 50 radiation protection program appropriately addresses dry storage cask loading and unloading, as well as ISFSI operations, including transport of the loaded OVERPACK or TRANSFER CASK outside of facilities governed by 10 CFR Part 50. The radiation protection program shall include appropriate controls for measuring dose rates, ensuring compliance with applicable regulations, and implementing actions to maintain personnel occupational exposures As Low As Reasonably Achievable (ALARA). This program provides a means to help ensure that licensees using the HI-STORM 100 System do not violate the dose limits in 10 CFR 72. The actions and criteria to be included in the program are provided below.*

5.7.2 *As part of its evaluation pursuant to 10 CFR 72.212(b)(2)(i)(C), the licensee shall perform an analysis to confirm that the dose limits of 10 CFR 72.104(a) will be satisfied under the actual site conditions and ISFSI configuration, considering the planned number of casks to be deployed and the cask contents.*

5.7.3 *Based on the analysis performed pursuant to Section 5.7.2, the licensee shall establish cask surface dose rate limits for the HI-TRAC TRANSFER CASK and the HI-STORM OVERPACK to be used at the site. Average neutron and gamma dose rate limits shall be established at the following locations:*

a. *The top of the TRANSFER CASK and the OVERPACK.*
b. *The side of the TRANSFER CASK and OVERPACK*
c. *The average of the inlet and outlet ducts on the OVERPACK*

5.7.4 *The licensee shall measure the TRANSFER CASK and OVERPACK surface neutron and gamma dose rates and calculate average values as described in Section 5.7.7 and 5.7.8 for comparison against the limits established in Section 5.7.3.*

5.7.5 *If the measured average surface dose rates exceed the limits established in Section 5.7.3, the licensee shall:*

a. *Administratively verify that the correct contents were loaded in the correct fuel storage cell locations.*
b. *Perform an evaluation to verify whether placement of the as-loaded OVERPACK at the ISFSI will cause the dose limits of 10 CFR 72.104 to be exceeded.*

5.7.6 *If the evaluation performed pursuant to Section 5.7.5 shows that the dose limits of 10 CFR 72.104 will be exceeded, appropriate corrective action shall be taken to ensure the dose limits are not exceeded.*

5.7 Radiation Protection Program (cont'd)

5.7.7 *TRANSFER CASK and OVERPACK surface dose rates shall be measured at approximately the following locations:*

a. *A minimum of 12 dose rate measurements shall be taken on the side of the TRANSFER CASK in three sets of four measurements. One measurement set shall be taken approximately at the cask mid-height plane. The second and third measurement sets shall be taken approximately 60 inches above and below the mid-height plane, respectively. Within each set, the measurement locations shall be approximately 90 degrees apart around the circumference of the cask. Dose rates shall be measured between the radial ribs of the water jacket.*

b. *A minimum of four (4) TRANSFER CASK top lid dose rates shall be measured at locations approximately half way between the edge of the hole in the top lid and the outer edge of the top lid, 90 degrees apart around the circumference of the top lid.*

c. *A minimum of 12 dose rate measurements shall be taken on the side of the OVERPACK in three sets of four measurements. One measurement set shall be taken approximately at the cask mid-height plane, 90 degrees apart around the circumference of the cask. The second and third measurement sets shall be taken approximately 60 inches above and below the mid-height plane, respectively, also 90 degrees apart around the circumference of the cask.*

d. *A minimum of five (5) dose rate measurements shall be taken on the top of the OVERPACK. One dose rate measurement shall be taken at approximately the center of the lid and four measurements shall be taken at locations on the top concrete shield, approximately half way between the center and the edge of the top shield, 90 degrees apart around the circumference of the lid.*

e. *A dose rate measurement shall be taken on contact at the surface of each inlet and outlet vent duct screen.*

5.7.8 *The average measured dose rates shall be calculated by summing the individual neutron and gamma dose rates measured in Sections 5.7.7.a through 5.7.7.e and dividing by the total number of measurements for that section. The neutron and gamma dose rates shall be averaged separately.*

CERTIFICATE OF COMPLIANCE NO. 1014

APPENDIX B

APPROVED CONTENTS AND DESIGN FEATURES

FOR THE HI-STORM 100 CASK SYSTEM

1.0 Definitions

NOTE

The defined terms of this section appear in capitalized type and are applicable throughout these Technical Specifications and Bases.

Term	Definition
CASK TRANSFER FACILITY (CTF)	The CASK TRANSFER FACILITY includes the following components and equipment: (1) a Cask Transfer Structure used to stabilize the TRANSFER CASK and MPC during lifts involving spent fuel not bounded by the regulations of 10 CFR Part 50, and (2) Either a stationary lifting device or a mobile lifting device used in concert with the stationary structure to lift the OVERPACK, TRANSFER CASK, and MPC
DAMAGED FUEL ASSEMBLY	DAMAGED FUEL ASSEMBLIES are fuel assemblies with known or suspected cladding defects, as determined by a review of records, greater than pinhole leaks or hairline cracks, empty fuel rod locations that are not filled with dummy fuel rods, or those that cannot be handled by normal means. Fuel assemblies that cannot be handled by normal means due to fuel cladding damage are considered FUEL DEBRIS.
DAMAGED FUEL CONTAINER (DFC)	DFCs are specially designed enclosures for DAMAGED FUEL ASSEMBLIES or FUEL DEBRIS which permit gaseous and liquid media to escape while minimizing dispersal of gross particulates. DFCs authorized for use in the HI-STORM 100 System are as follows: 1. Holtec Dresden Unit 1/Humboldt Bay design 2. Transnuclear Dresden Unit 1 design 3. Holtec Generic BWR design 4. Holtec Generic PWR design
FUEL DEBRIS	FUEL DEBRIS is ruptured fuel rods, severed rods, loose fuel pellets or fuel assemblies with known or suspected defects which cannot be handled by normal means due to fuel cladding damage.

(continued)

1.0 Definitions (continued)

INTACT FUEL ASSEMBLY	INTACT FUEL ASSEMBLIES are fuel assemblies without known or suspected cladding defects greater than pinhole leaks or hairline cracks and which can be handled by normal means. Fuel assemblies without fuel rods in fuel rod locations shall not be classified as INTACT FUEL ASSEMBLIES unless dummy fuel rods are used to displace an amount of water greater than or equal to that displaced by the fuel rod(s).
LOADING OPERATIONS	LOADING OPERATIONS include all licensed activities on an OVERPACK or TRANSFER CASK while it is being loaded with fuel assemblies. LOADING OPERATIONS begin when the first fuel assembly is placed in the MPC and end when the OVERPACK or TRANSFER CASK is suspended from or secured on the transporter. LOADING OPERATIONS does not included MPC transfer between the TRANSFER CASK and the OVERPACK.
MINIMUM ENRICHMENT	*MINIMUM ENRICHMENT is the minimum assembly average enrichment. Natural uranium blankets are not considered in determining minimum enrichment.*
MULTI-PURPOSE CANISTER (MPC)	MPCs are the sealed spent nuclear fuel canisters which consist of a honeycombed fuel basket contained in a cylindrical canister shell which is welded to a baseplate, lid with welded port cover plates, and closure ring. The MPC provides the confinement boundary for the contained radioactive materials.
NON-FUEL HARDWARE	NON-FUEL HARDWARE is defined as Burnable Poison Rod Assemblies (BPRAs), Thimble Plug Devices (TPDs), Control Rod Assemblies (CRAs), Axial Power Shaping Rods (APSRs), Wet Annular Burnable Absorbers (WABAs), Rod Cluster Control Assemblies (RCCAs), Control Element Assemblies (CEAs), water displacement guide tube plugs, ~~and~~, orifice rod assemblies, *and vibration suppressor inserts.*
OVERPACK	OVERPACKs are the casks which receive and contain the sealed MPCs for interim storage on the ISFSI. They provide gamma and neutron shielding, and provide for ventilated air flow to promote heat transfer from the MPC to the environs. The OVERPACK does not include the TRANSFER CASK.

(continued)

1.0 Definitions (continued)

PLANAR-AVERAGE INITIAL ENRICHMENT	PLANAR-AVERAGE INITIAL ENRICHMENT is the average of the distributed fuel rod initial enrichments within a given axial plane of the assembly lattice.
SPENT FUEL STORAGE CASKS (SFSCs)	An SFSC is a container approved for the storage of spent fuel assemblies at the ISFSI. The HI-STORM 100 SFSC System consists of the OVERPACK and its integral MPC.
TRANSFER CASK	TRANSFER CASKs are containers designed to contain the MPC during and after loading of spent fuel assemblies and to transfer the MPC to or from the OVERPACK. The HI-STORM 100 System employs either the 125-Ton or the 100-Ton HI-TRAC TRANSFER CASK.
TRANSPORT OPERATIONS	TRANSPORT OPERATIONS include all licensed activities performed on an OVERPACK or TRANSFER CASK loaded with one or more fuel assemblies when it is being moved to and from the ISFSI. TRANSPORT OPERATIONS begin when the OVERPACK or TRANSFER CASK is first suspended from or secured on the transporter and end when the OVERPACK or TRANSFER CASK is at its destination and no longer secured on or suspended from the transporter. TRANSPORT OPERATIONS include transfer of the MPC between the OVERPACK and the TRANSFER CASK.
UNLOADING OPERATIONS	UNLOADING OPERATIONS include all licensed activities on an SFSC to be unloaded of the contained fuel assemblies. UNLOADING OPERATIONS begin when the OVERPACK or TRANSFER CASK is no longer suspended from or secured on the transporter and end when the last fuel assembly is removed from the SFSC. UNLOADING OPERATIONS does not include MPC transfer between the TRANSFER CASK and the OVERPACK.
ZR	*ZR means any zirconium-based fuel cladding material authorized for use in a commercial nuclear power plant reactor.*

2.0 APPROVED CONTENTS

2.1 Fuel Specifications and Loading Conditions

2.1.1 Fuel To Be Stored In The HI-STORM 100 SFSC System

a. INTACT FUEL ASSEMBLIES, DAMAGED FUEL ASSEMBLIES, FUEL DEBRIS, and NON-FUEL HARDWARE meeting the limits specified in Table 2.1-1 and other referenced tables may be stored in the HI-STORM 100 SFSC System.

b. For MPCs partially loaded with stainless steel clad fuel assemblies, all remaining fuel assemblies in the MPC shall meet the decay heat generation limit for the stainless steel clad fuel assemblies.

c. ~~For MPCs partially loaded with DAMAGED FUEL ASSEMBLIES or FUEL DEBRIS, all remaining Zircaloy (or other alloy of zirconium) clad INTACT FUEL ASSEMBLIES in the MPC shall meet the decay heat generation limits for the DAMAGED FUEL ASSEMBLIES. This requirement applies only to uniform fuel loading.~~

d. For MPCs partially loaded with array/class 6x6A, 6x6B, 6x6C, 7x7A, or 8x8A fuel assemblies, all remaining ~~Zircaloy (or other alloy of zirconium)~~ *ZR* clad INTACT FUEL ASSEMBLIES in the MPC shall meet the decay heat generation limits for the 6x6A, 6x6B, 6x6C, 7x7A and 8x8A fuel assemblies.

e. All BWR fuel assemblies may be stored with or without ~~Zircaloy (or other alloy of zirconium)~~ *ZR* channels with the exception of array/class 10x10D and 10x10E fuel assemblies, which may be stored with or without ~~Zircaloy~~*ZR* or stainless steel channels.

2.1.2 Uniform Fuel Loading

Any authorized fuel assembly may be stored in any fuel cell location, subject to other restrictions related to DAMAGED FUEL, FUEL DEBRIS, and NON-FUEL HARDWARE specified in the CoC. ~~Preferential fuel loading shall be used during uniform loading (i.e., any authorized fuel assembly in any fuel storage location) whenever fuel assemblies with significantly different post-irradiation cooling times (≥ 1 year) are to be loaded in the same MPC. Fuel assemblies with the longest post-irradiation cooling times shall be loaded into fuel storage locations at the periphery of the basket. Fuel assemblies with shorter post-irradiation cooling times shall be placed toward the center of the basket. Regionalized fuel loading as described in Technical Specification 2.1.3 below meets the intent of preferential fuel loading.~~

(continued)

2.0 Approved Contents

2.1 Fuel Specifications and Loading Conditions (cont'd)

2.1.3 Regionalized Fuel Loading

Users may choose to store fuel using regionalized loading in lieu of uniform loading to allow higher heat emitting fuel assemblies to be stored than would otherwise be able to be stored using uniform loading. Regionalized loading is limited to those fuel assemblies with ~~Zircaloy (or other alloy of zirconium)~~ *ZR* cladding. Figures 2.1-1 through 2.1-4 define the regions for the MPC-24, MPC-24E, MPC-24EF, MPC-32, *MPC-32F,* MPC-68, and MPC-68FF models, respectively[1]. Fuel assembly burnup, decay heat, and cooling time limits for regionalized loading are specified in *Section 2.4.2.* ~~Tables 2.1-6 and 2.1-7~~. Fuel assemblies used in regionalized loading shall meet all other applicable limits specified in Tables 2.1-1 through 2.1-3.

2.2 Violations

If any Fuel Specifications or Loading Conditions of 2.1 are violated, the following actions shall be completed:

2.2.1 The affected fuel assemblies shall be placed in a safe condition.

2.2.2 Within 24 hours, notify the NRC Operations Center.

2.2.3 Within 30 days, submit a special report which describes the cause of the violation, and actions taken to restore compliance and prevent recurrence.

2.3 Deviations from Cask Contents Requirements

Proposed alternatives to the contents listed in Section 2.0 may be authorized on a case-specific basis by the Director of the Office of Nuclear Material Safety and Safeguards or designee. The request for such alternative contents should demonstrate that:

2.3.1 The proposed alternative contents would provide an equivalent level of safety, and

2.3.2 The proposed alternative contents are consistent with the applicable requirements.

---

[1] These figures are only intended to distinguish the fuel loading regions. Other details of the basket design are illustrative and may not reflect the actual basket design details. The design drawings should be consulted for basket design details.

2.0 APPROVED CONTENTS

2.3 Deviations from Cask Contents Requirements (cont'd)

2.3.3 *Requests for case-specific NRC approval of alternatives to contents shall be submitted in accordance with 10 CFR 72.4 by the certificate holder. Case-specific alternatives approved pursuant to this section shall be incorporated permanently into the CoC by the certificate holder in accordance with 10 CFR 72.244. Requests made pursuant to this section must meet all of the following requirements:*

2.3.3.1 *The proposed change must not significantly decrease any safety margins as described in the HI-STORM 100 System FSAR, as updated.*

2.3.3.2 *The proposed change may involve only the physical fuel assembly parameters listed below as specified in Tables 2.1-1, 2.1-2, and/or 2.1-3 of this Appendix:*

a. *Fuel Assembly Length*
b. *Fuel Assembly Width*
c. *Fuel Assembly Weight*
d. *Fuel Rod Clad Outside Diameter (OD)*
e. *Fuel Rod Clad Inside Diameter (ID)*
f. *Fuel Pellet Diameter*
g. *Fuel Rod Pitch*
h. *PWR Guide/Instrument Tube Thickness*
i. *BWR Water Rod Thickness*
j. *BWR Channel Thickness*

2.3.3.3 *The proposed change must be required to meet a compelling user need whereby using the normal certificate amendment process is not practical.*

LEGEND:

REGION 1:

REGION 2:

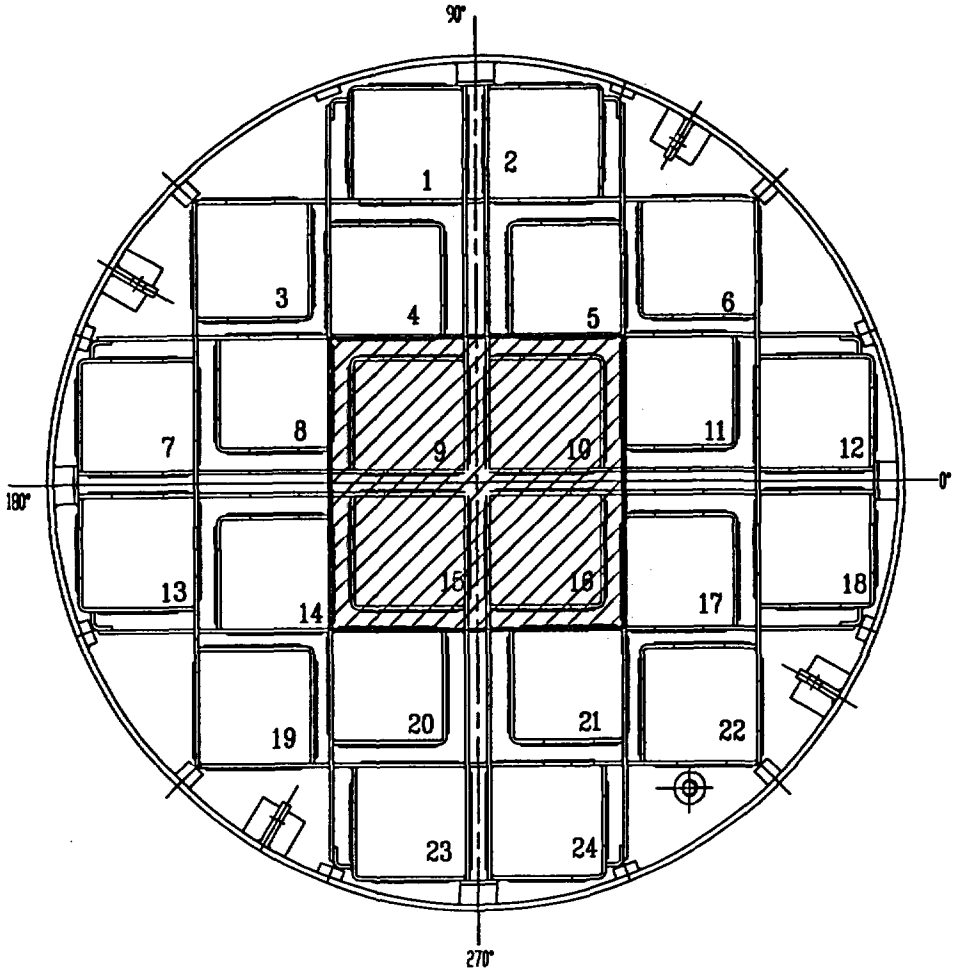

FIGURE 2.1-1
FUEL LOADING REGIONS - MPC-24

LEGEND:

REGION 1:

REGION 2:

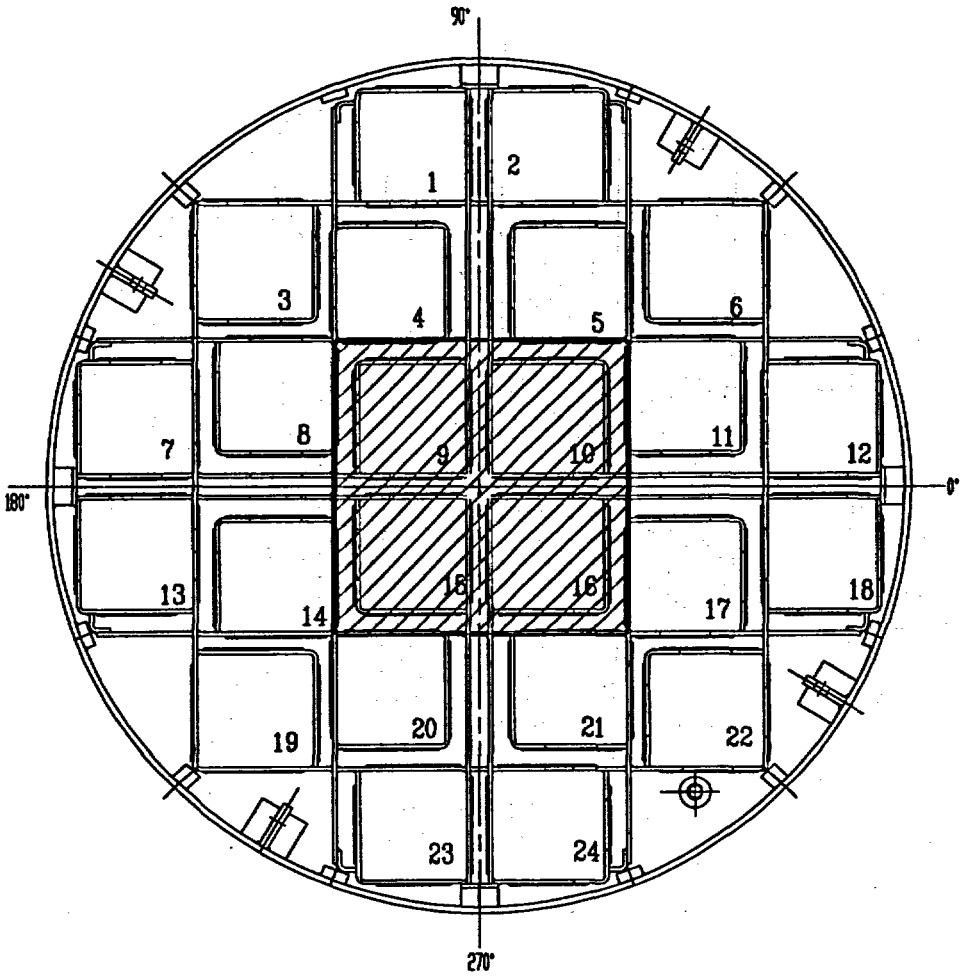

FIGURE 2.1-2

FUEL LOADING REGIONS - MPC-24E/24EF

LEGEND:

REGION 1:

REGION 2:

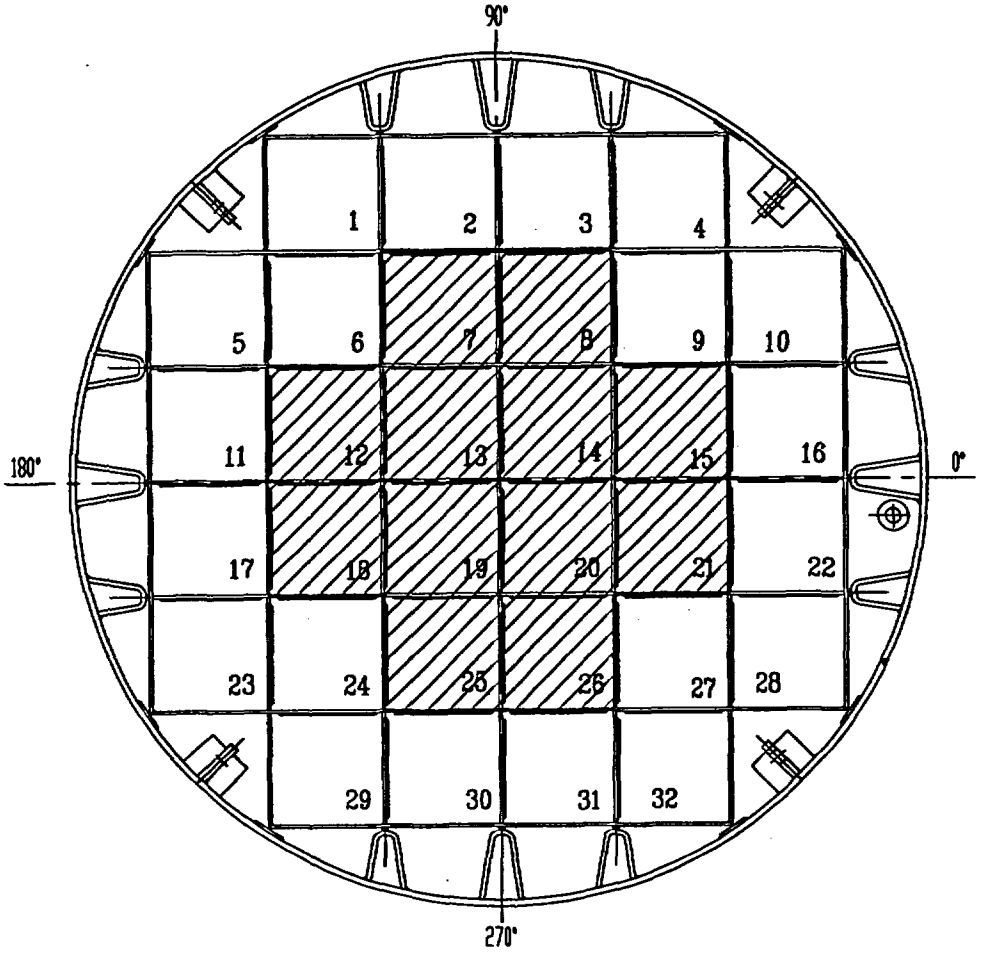

FIGURE 2.1-3

FUEL LOADING REGIONS - MPC-32/32F

LEGEND:

REGION 1:

REGION 2:

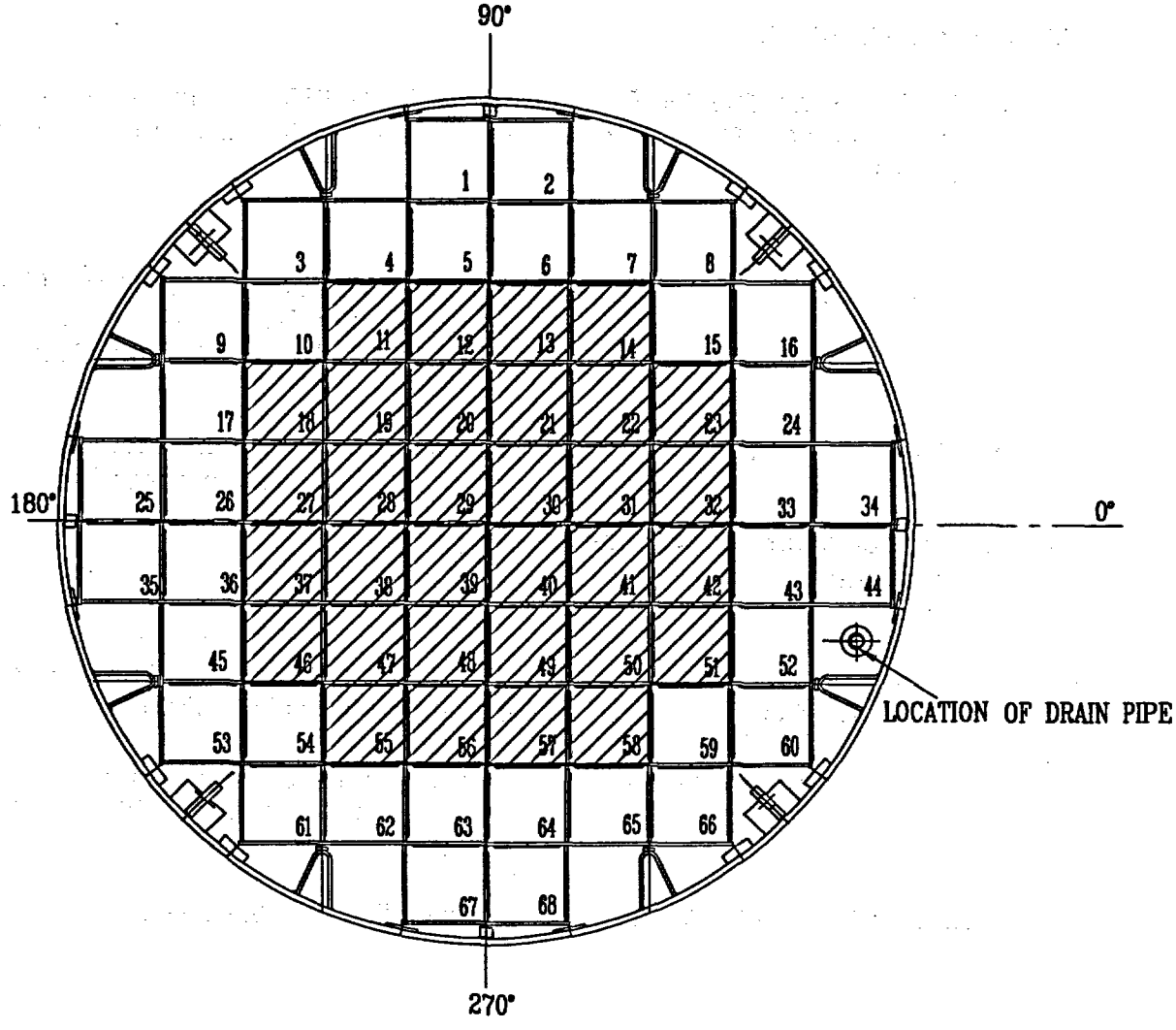

FIGURE 2.1-4

FUEL LOADING REGIONS - MPC-68/68FF

Table 2.1-1 (page 1 of 339)
Fuel Assembly Limits

I. MPC MODEL: MPC-24

A. Allowable Contents

1. Uranium oxide, PWR INTACT FUEL ASSEMBLIES listed in Table 2.1-2, with or without NON-FUEL HARDWARE and meeting the following specifications (Note 1):

a. Cladding Type:	~~Zircaloy (Zr)~~ *ZR* or Stainless Steel (SS) as specified in Table 2.1-2 for the applicable fuel assembly array/class.
b. Initial Enrichment:	As specified in Table 2.1-2 for the applicable fuel assembly array/class.
c. Post-irradiation Cooling Time and Average Burnup Per Assembly:	
i. Array/Classes 14x14D,14x14E, and 15x15G	Cooling time ≥ 8 years and an average burnup ≤ 40,000 MWD/MTU.
ii. All Other Array/Classes	Cooling time and average burnup as specified in *Section 2.4.* ~~Tables 2.1-4 or 2.1-6.~~
iii. NON-FUEL HARDWARE	As specified in Table 2.1-8.

Table 2.1-1 (page 2 of 339)
Fuel Assembly Limits

I. MPC MODEL: MPC-24 (continued)

A. Allowable Contents (continued)

d. Decay Heat Per Assembly:

i. Array/Classes 14x14D, 14x14E, and 15x15G	≤ 710 Watts
ii All Other Array/Classes	As specified in *Section 2.4.* ~~Tables 2.1-5 or 2.1-7~~

e. Fuel Assembly Length:	≤ 176.8 inches (nominal design)
f. Fuel Assembly Width:	≤ 8.54 inches (nominal design)
g. Fuel Assembly Weight:	≤ 1,680 lbs (including NON-FUEL HARDWARE)

B. Quantity per MPC: Up to 24 fuel assemblies.

C. Deleted.

D. *Neutron sources,* DAMAGED FUEL ASSEMBLIES and FUEL DEBRIS are not authorized for loading into the MPC-24.

Note 1: Fuel assemblies containing BPRAs, TPDs, WABAs, water displacement guide tube plugs, ~~or~~ orifice rod assemblies, *or vibration suppressor inserts* may be stored in any fuel cell location. Fuel assemblies containing CRAs, RCCAs, CEAs, or APSRs may only be loaded in fuel storage locations 9, 10, 15, and/or 16. These requirements are in addition to any other requirements specified for uniform or regionalized fuel loading.

Table 2.1-1 (page 3 of 339)
Fuel Assembly Limits

II. MPC MODEL: MPC-68

A. Allowable Contents

1. Uranium oxide, BWR INTACT FUEL ASSEMBLIES listed in Table 2.1-3, with or without channels, and meeting the following specifications:

a. Cladding Type:	~~Zircaloy (Zr)~~ *ZR* or Stainless Steel (SS) as specified in Table 2.1-3 for the applicable fuel assembly array/class.
b. Maximum PLANAR-AVERAGE INITIAL ENRICHMENT:	As specified in Table 2.1-3 for the applicable fuel assembly array/class.
c. Initial Maximum Rod Enrichment:	As specified in Table 2.1-3 for the applicable fuel assembly array/class.
d. Post-irradiation Cooling Time and Average Burnup Per Assembly:	
i. Array/Classes 6x6A, 6x6C, 7x7A, and 8x8A:	Cooling time ≥ 18 years and an average burnup ≤ 30,000 MWD/MTU
ii. Array/Class 8x8F	Cooling time ≥ 10 years and an average burnup ≤ 27,500 MWD/MTU.
iii. Array/Classes 10x10D and 10x10E	Cooling time ≥ 10 years and an average burnup ≤ 22,500 MWD/MTU.
iv. All Other Array/Classes	As specified in *Section 2.4.* ~~Tables 2.1-4 or 2.1-6.~~

Table 2.1-1 (page 4 of 339)
Fuel Assembly Limits

II. MPC MODEL: MPC-68 (continued)

A. Allowable Contents (continued)

e. Decay Heat Per Assembly:

i. Array/Classes 6x6A, 6x6C, 7x7A, and 8x8A	≤ 115 Watts
ii. Array/Class 8x8F	≤ 183.5 Watts.
iii. Array/Classes 10x10D and 10x10E	≤ 95 Watts
iv. All Other Array/Classes	As specified in *Section 2.4.* ~~Tables 2.1-5 or 2.1-7.~~

f. Fuel Assembly Length:	≤ 176.5 inches (nominal design)
g. Fuel Assembly Width:	≤ 5.85 inches (nominal design)
h. Fuel Assembly Weight:	≤ 700 lbs, including channels

Table 2.1-1 (page 5 of 339)
Fuel Assembly Limits

II. MPC MODEL: MPC-68 (continued)

A. Allowable Contents (continued)

2. Uranium oxide, BWR DAMAGED FUEL ASSEMBLIES, with or without channels, placed in DAMAGED FUEL CONTAINERS. Uranium oxide BWR DAMAGED FUEL ASSEMBLIES shall meet the criteria specified in Table 2.1-3 and meet the following specifications:

a. Cladding Type:	~~Zircaloy (Zr)~~ *ZR* or Stainless Steel (SS) as specified in Table 2.1-3 for the applicable fuel assembly array/class.
b. Maximum PLANAR-AVERAGE INITIAL ENRICHMENT:	
i. Array/Classes 6x6A, 6x6C, 7x7A, and 8x8A	As specified in Table 2.1-3 for the applicable fuel assembly array/class.
ii. All Other Array/Classes specified in Table 2.1-3	4.0 wt% ^{235}U
c. Initial Maximum Rod Enrichment:	As specified in Table 2.1-3 for the applicable fuel assembly array/class.
d. Post-irradiation Cooling Time and Average Burnup Per Assembly:	
i. Array/Classes 6x6A, 6x6C, 7x7A,and 8x8A	Cooling time ≥ 18 years and an average burnup ≤ 30,000 MWD/MTU.
ii. Array/Class 8x8F	Cooling time ≥ 10 years and an average burnup ≤ 27,500 MWD/MTU.
iii. Array/Classes 10x10D and 10x10E	Cooling time ≥ 10 years and an average burnup ≤ 22,500 MWD/MTU.
iv. All Other Array Classes	As specified in *Section 2.4.* ~~Tables 2.1-4 or 2.1-6.~~

Table 2.1-1 (page 6 of 339)
Fuel Assembly Limits

II. MPC MODEL: MPC-68 (continued)

A. Allowable Contents (continued)

e. Decay Heat Per Assembly:

i.	Array/Class 6x6A, 6x6C, 7x7A, and 8x8A	≤ 115 Watts
ii.	Array/Class 8x8F	≤ 183.5 Watts
iii.	Array/Classes 10x10D and 10x10E	≤ 95 Watts
iv.	All Other Array/Classes	As specified in *Section 2.4.* ~~Tables 2.1-5 or 2.1-7~~

f. Fuel Assembly Length:

i.	Array/Class 6x6A, 6x6C, 7x7A, or 8x8A	≤ 135.0 inches (nominal design)
ii.	All Other Array/Classes	≤ 176.5 inches (nominal design)

g. Fuel Assembly Width:

i.	Array/Class 6x6A, 6x6C, 7x7A, or 8x8A	≤ 4.70 inches (nominal design)
ii.	All Other Array/Classes	≤ 5.85 inches (nominal design)

h. Fuel Assembly Weight:

i.	Array/Class 6x6A, 6x6C, 7x7A, or 8x8A	≤ 550 lbs, including channels and DFC
ii.	All Other Array/Classes	≤ 700 lbs, including channels and DFC

Table 2.1-1 (page 7 of 339)
Fuel Assembly Limits

II. MPC MODEL: MPC-68 (continued)

A. Allowable Contents (continued)

3. Mixed oxide (MOX), BWR INTACT FUEL ASSEMBLIES, with or without channels. MOX BWR INTACT FUEL ASSEMBLIES shall meet the criteria specified in Table 2.1-3 for fuel assembly array/class 6x6B, and meet the following specifications:

a. Cladding Type:	~~Zircaloy (Zr)~~ *ZR*
b. Maximum PLANAR-AVERAGE INITIAL ENRICHMENT:	As specified in Table 2.1-3 for fuel assembly array/class 6x6B.
c. Initial Maximum Rod Enrichment:	As specified in Table 2.1-3 for fuel assembly array/class 6x6B.
d. Post-irradiation Cooling Time and Average Burnup Per Assembly:	Cooling time ≥ 18 years and an average burnup ≤ 30,000 MWD/MTIHM.
e. Decay Heat Per Assembly:	≤ 115 Watts
f. Fuel Assembly Length:	≤ 135.0 inches (nominal design)
g. Fuel Assembly Width:	≤ 4.70 inches (nominal design)
h. Fuel Assembly Weight:	≤ 400 lbs, including channels

Table 2.1-1 (page 8 of 339)
Fuel Assembly Limits

II. MPC MODEL: MPC-68 (continued)

A. Allowable Contents (continued)

4. Mixed oxide (MOX), BWR DAMAGED FUEL ASSEMBLIES, with or without channels, placed in DAMAGED FUEL CONTAINERS. MOX BWR DAMAGED FUEL ASSEMBLIES shall meet the criteria specified in Table 2.1-3 for fuel assembly array/class 6x6B, and meet the following specifications:

a. Cladding Type:	~~Zircaloy (Zr)~~ *ZR*
b. Maximum PLANAR-AVERAGE INITIAL ENRICHMENT:	As specified in Table 2.1-3 for array/class 6x6B.
c. Initial Maximum Rod Enrichment:	As specified in Table 2.1-3 for array/class 6x6B.
d. Post-irradiation Cooling Time and Average Burnup Per Assembly:	Cooling time ≥ 18 years and an average burnup ≤ 30,000 MWD/MTIHM.
e. Decay Heat Per Assembly:	≤ 115 Watts
f. Fuel Assembly Length:	≤ 135.0 inches (nominal design)
g. Fuel Assembly Width:	≤ 4.70 inches (nominal design)
h. Fuel Assembly Weight:	≤ 550 lbs, including channels and DFC

Table 2.1-1 (page 9 of 339)
Fuel Assembly Limits

II. MPC MODEL: MPC-68 (continued)

A. Allowable Contents (continued)

5. Thoria rods (ThO_2 and UO_2) placed in Dresden Unit 1 Thoria Rod Canisters and meeting the following specifications:

a. Cladding Type:	~~Zircaloy (Zr)~~ *ZR*
b. Composition:	98.2 wt.% ThO_2, 1.8 wt. % UO_2 with an enrichment of 93.5 wt. % ^{235}U.
c. Number of Rods Per Thoria Rod Canister:	≤ 18
d. Decay Heat Per Thoria Rod Canister:	≤ 115 Watts
e. Post-irradiation Fuel Cooling Time and Average Burnup Per Thoria Rod Canister:	A fuel post-irradiation cooling time ≥ 18 years and an average burnup ≤ 16,000 MWD/MTIHM.
f. Initial Heavy Metal Weight:	≤ 27 kg/canister
g. Fuel Cladding O.D.:	≥ 0.412 inches
h. Fuel Cladding I.D.:	≤ 0.362 inches
i. Fuel Pellet O.D.:	≤ 0.358 inches
j. Active Fuel Length:	≤ 111 inches
k. Canister Weight:	≤ 550 lbs, including fuel

Table 2.1-1 (page 10 of 339)
Fuel Assembly Limits

II. MPC MODEL: MPC-68 (continued)

B. Quantity per MPC:

1. Up to one (1) Dresden Unit 1 Thoria Rod Canister;

2. Up to 68 array/class 6x6A, 6x6B, 6x6C, 7x7A, or 8x8A DAMAGED FUEL ASSEMBLIES in DAMAGED FUEL CONTAINERS;

3. Up to sixteen (16) other BWR DAMAGED FUEL ASSEMBLIES in DAMAGED FUEL CONTAINERS in fuel storage locations 1, 2, 3, 8, 9, 16, 25, 34, 35, 44, 53, 60, 61, 66, 67, and/or 68; and/or

4. Any number of BWR INTACT FUEL ASSEMBLIES up to a total of 68.

C. Array/Class 10x10D and 10x10E fuel assemblies in stainless steel channels must be stored in fuel storage locations 19 - 22, 28 - 31, 38 -41, and/or 47 - 50.

D. Dresden Unit 1 fuel assemblies with one Antimony-Beryllium neutron source are authorized for loading in the MPC-68. The Antimony-Beryllium source material shall be in a water rod location.

E. FUEL DEBRIS is not authorized for loading in the MPC-68.

Table 2.1-1 (page 11 of 339)
Fuel Assembly Limits

III. MPC MODEL: MPC-68F

A. Allowable Contents

1. Uranium oxide, BWR INTACT FUEL ASSEMBLIES, with or without ~~Zircaloy (Zr)~~ *ZR* channels. Uranium oxide BWR INTACT FUEL ASSEMBLIES shall meet the criteria specified in Table 2.1-3 for fuel assembly array class 6x6A, 6x6C, 7x7A or 8x8A, and meet the following specifications:

a. Cladding Type:	~~Zircaloy (Zr)~~ *ZR*
b Maximum PLANAR-AVERAGE INITIAL ENRICHMENT:	As specified in Table 2.1-3 for the applicable fuel assembly array/class.
c. Initial Maximum Rod Enrichment:	As specified in Table 2.1-3 for the applicable fuel assembly array/class.
d. Post-irradiation Cooling Time and Average Burnup Per Assembly:	Cooling time ≥ 18 years and an average burnup ≤ 30,000 MWD/MTU.
e. Decay Heat Per Assembly	≤ 115 Watts
f. Fuel Assembly Length:	≤ 135.0 inches (nominal design)
g. Fuel Assembly Width:	≤ 4.70 inches (nominal design)
h. Fuel Assembly Weight:	≤ 400 lbs, including channels

Table 2.1-1 (page 12 of 339)
Fuel Assembly Limits

III. MPC MODEL: MPC-68F (continued)

A. Allowable Contents (continued)

2. Uranium oxide, BWR DAMAGED FUEL ASSEMBLIES, with or without ~~Zircaloy (Zr)~~ *ZR* channels, placed in DAMAGED FUEL CONTAINERS. Uranium oxide BWR DAMAGED FUEL ASSEMBLIES shall meet the criteria specified in Table 2.1-3 for fuel assembly array/class 6x6A, 6x6C, 7x7A, or 8x8A, and meet the following specifications:

a. Cladding Type:	~~Zircaloy (Zr)~~ *ZR*
b. Maximum PLANAR-AVERAGE INITIAL ENRICHMENT:	As specified in Table 2.1-3 for the applicable fuel assembly array/class.
c. Initial Maximum Rod Enrichment:	As specified in Table 2.1-3 for the applicable fuel assembly array/class.
d. Post-irradiation Cooling Time and Average Burnup Per Assembly:	Cooling time ≥ 18 years and an average burnup ≤ 30,000 MWD/MTU.
e. Decay Heat Per Assembly:	≤ 115 Watts
f. Fuel Assembly Length:	≤ 135.0 inches (nominal design)
g. Fuel Assembly Width:	≤ 4.70 inches (nominal design)
h. Fuel Assembly Weight:	≤ 550 lbs, including channels and DFC

Table 2.1-1 (page 13 of 339)
Fuel Assembly Limits

III. MPC MODEL: MPC-68F (continued)

A. Allowable Contents (continued)

3. Uranium oxide, BWR FUEL DEBRIS, with or without ~~Zircaloy (Zr)~~ *ZR* channels, placed in DAMAGED FUEL CONTAINERS. The original fuel assemblies for the uranium oxide BWR FUEL DEBRIS shall meet the criteria specified in Table 2.1-3 for fuel assembly array/class 6x6A, 6x6C, 7x7A, or 8x8A, and meet the following specifications:

a. Cladding Type:	~~Zircaloy (Zr)~~ *ZR*
b. Maximum PLANAR-AVERAGE INITIAL ENRICHMENT:	As specified in Table 2.1-3 for the applicable original fuel assembly array/class.
c Initial Maximum Rod Enrichment:	As specified in Table 2.1-3 for the applicable original fuel assembly array/class.
d. Post-irradiation Cooling Time and Average Burnup Per Assembly	Cooling time ≥ 18 years and an average burnup ≤ 30,000 MWD/MTU for the original fuel assembly.
e. Decay Heat Per Assembly	≤ 115 Watts
f. Original Fuel Assembly Length	≤ 135.0 inches (nominal design)
g. Original Fuel Assembly Width	≤ 4.70 inches (nominal design)
h. Fuel Debris Weight	≤ 550 lbs, including channels and DFC

Table 2.1-1 (page 14 of 339)
Fuel Assembly Limits

III. MPC MODEL: MPC-68F (continued)

A. Allowable Contents (continued)

4. Mixed oxide (MOX), BWR INTACT FUEL ASSEMBLIES, with or without ~~Zircaloy (Zr)~~ *ZR* channels. MOX BWR INTACT FUEL ASSEMBLIES shall meet the criteria specified in Table 2.1-3 for fuel assembly array/class 6x6B, and meet the following specifications:

a. Cladding Type:	~~Zircaloy (Zr)~~ *ZR*
b. Maximum PLANAR-AVERAGE INITIAL ENRICHMENT:	As specified in Table 2.1-3 for fuel assembly array/class 6x6B.
c. Initial Maximum Rod Enrichment:	As specified in Table 2.1-3 for fuel assembly array/class 6x6B.
d. Post-irradiation Cooling Time and Average Burnup Per Assembly:	Cooling time ≥ 18 years and an average burnup ≤ 30,000 MWD/MTIHM.
e. Decay Heat Per Assembly	≤ 115 Watts
f. Fuel Assembly Length:	≤ 135.0 inches (nominal design)
g. Fuel Assembly Width:	≤ 4.70 inches (nominal design)
h. Fuel Assembly Weight:	≤ 400 lbs, including channels

Table 2.1-1 (page 15 of 339)
Fuel Assembly Limits

III. MPC MODEL: MPC-68F (continued)

A. Allowable Contents (continued)

5. Mixed oxide (MOX), BWR DAMAGED FUEL ASSEMBLIES, with or without ~~Zircaloy (Zr)~~ *ZR* channels, placed in DAMAGED FUEL CONTAINERS. MOX BWR DAMAGED FUEL ASSEMBLIES shall meet the criteria specified in Table 2.1-3 for fuel assembly array/class 6x6B, and meet the following specifications:

a. Cladding Type:	~~Zircaloy (Zr)~~ *ZR*
b. Maximum PLANAR-AVERAGE INITIAL ENRICHMENT:	As specified in Table 2.1-3 for fuel assembly array/class 6x6B.
c. Initial Maximum Rod Enrichment:	As specified in Table 2.1-3 for fuel assembly array/class 6x6B.
d. Post-irradiation Cooling Time and Average Burnup Per Assembly:	Cooling time ≥ 18 years and an average burnup ≤ 30,000 MWD/MTIHM.
e. Decay Heat Per Assembly	≤ 115 Watts
f. Fuel Assembly Length:	≤ 135.0 inches (nominal design)
g. Fuel Assembly Width:	≤ 4.70 inches (nominal design)
h. Fuel Assembly Weight:	≤ 550 lbs, including channels and DFC

Table 2.1-1 (page 16 of 339)
Fuel Assembly Limits

III. MPC MODEL: MPC-68F (continued)

A. Allowable Contents (continued)

6. Mixed Oxide (MOX), BWR FUEL DEBRIS, with or without ~~Zircaloy (Zr)~~ *ZR* channels, placed in DAMAGED FUEL CONTAINERS. The original fuel assemblies for the MOX BWR FUEL DEBRIS shall meet the criteria specified in Table 2.1-3 for fuel assembly array/class 6x6B, and meet the following specifications:

a. Cladding Type:	~~Zircaloy (Zr)~~ *ZR*
b. Maximum PLANAR-AVERAGE INITIAL ENRICHMENT:	As specified in Table 2.1-3 for original fuel assembly array/class 6x6B.
c. Initial Maximum Rod Enrichment:	As specified in Table 2.1-3 for original fuel assembly array/class 6x6B.
d. Post-irradiation Cooling Time and Average Burnup Per Assembly:	Cooling time ≥ 18 years and an average burnup ≤ 30,000 MWD/MTIHM for the original fuel assembly.
e. Decay Heat Per Assembly	≤ 115 Watts
f. Original Fuel Assembly Length:	≤ 135.0 inches (nominal design)
g. Original Fuel Assembly Width:	≤ 4.70 inches (nominal design)
h. Fuel Debris Weight:	≤ 550 lbs, including channels and DFC

Table 2.1-1 (page 17 of 339)
Fuel Assembly Limits

III. MPC MODEL: MPC-68F (continued)

A. Allowable Contents (continued)

7. Thoria rods (ThO_2 and UO_2) placed in Dresden Unit 1 Thoria Rod Canisters and meeting the following specifications:

a. Cladding Type:	~~Zircaloy (Zr)~~ *ZR*
b. Composition:	98.2 wt.% ThO_2, 1.8 wt. % UO_2 with an enrichment of 93.5 wt. % ^{235}U.
c. Number of Rods Per Thoria Rod Canister:	≤ 18
d. Decay Heat Per Thoria Rod Canister:	≤ 115 Watts
e. Post-irradiation Fuel Cooling Time and Average Burnup Per Thoria Rod Canister:	A fuel post-irradiation cooling time ≥ 18 years and an average burnup ≤ 16,000 MWD/MTIHM.
f. Initial Heavy Metal Weight:	≤ 27 kg/canister
g. Fuel Cladding O.D.:	≥ 0.412 inches
h. Fuel Cladding I.D.:	≤ 0.362 inches
i. Fuel Pellet O.D.:	≤ 0.358 inches
j. Active Fuel Length:	≤ 111 inches
k. Canister Weight:	≤ 550 lbs, including fuel

Table 2.1-1 (page 18 of 339)
Fuel Assembly Limits

III. MPC MODEL: MPC-68F (continued)

B. Quantity per MPC (up to a total of 68 assemblies):
(All fuel assemblies must be array/class 6x6A, 6x6B, 6x6C, 7x7A, or 8x8A):

Up to four (4) DFCs containing uranium oxide BWR FUEL DEBRIS or MOX BWR FUEL DEBRIS. The remaining MPC-68F fuel storage locations may be filled with fuel assemblies of the following type, as applicable:

1. Uranium oxide BWR INTACT FUEL ASSEMBLIES;

2. MOX BWR INTACT FUEL ASSEMBLIES;

3. Uranium oxide BWR DAMAGED FUEL ASSEMBLIES placed in DFCs;

4. MOX BWR DAMAGED FUEL ASSEMBLIES placed in DFCs; or

5. Up to one (1) Dresden Unit 1 Thoria Rod Canister.

C. Fuel assemblies with stainless steel channels are not authorized for loading in the MPC-68F.

D. Dresden Unit 1 fuel assemblies with one Antimony-Beryllium neutron source are authorized for loading in the MPC-68F. The Antimony-Beryllium source material shall be in a water rod location.

Table 2.1-1 (page 19 of 339)
Fuel Assembly Limits

IV. MPC MODEL: MPC-24E

A. Allowable Contents

1. Uranium oxide, PWR INTACT FUEL ASSEMBLIES listed in Table 2.1-2, with or without NON-FUEL HARDWARE and meeting the following specifications (Note 1):

a. Cladding Type:	~~Zircaloy (Zr)~~ *ZR* or Stainless Steel (SS) as specified in Table 2.1-2 for the applicable fuel assembly array/class
b. Initial Enrichment:	As specified in Table 2.1-2 for the applicable fuel assembly array/class.
c. Post-irradiation Cooling Time and Average Burnup Per Assembly:	
i. Array/Classes 14x14D, 14x14E, and 15x15G	Cooling time ≥ 8 years and an average burnup ≤ 40,000 MWD/MTU.
ii. All Other Array/Classes	As specified in *Section 2.4.* ~~Tables 2.1-4 or 2.1-6.~~
iii. NON-FUEL HARDWARE	As specified in Table 2.1-8.

Table 2.1-1 (page 20 of 339)
Fuel Assembly Limits

IV. MPC MODEL: MPC-24E (continued)

A. Allowable Contents (continued)

d. Decay Heat Per Assembly:

i. Array/Classes 14x14D, 14x14E, and 15x15G	≤ 710 Watts.
ii. All other Array/Classes	As specified in *Section 2.4.* ~~Tables 2.1-5 or 2.1-7.~~
e. Fuel Assembly Length:	≤ 176.8 inches (nominal design)
f. Fuel Assembly Width:	≤ 8.54 inches (nominal design)
g. Fuel Assembly Weight:	≤ 1,680 lbs (including NON-FUEL HARDWARE)

Table 2.1-1 (page 21 of ~~33~~9)
Fuel Assembly Limits

IV. MPC MODEL: MPC-24E (continued)

A. Allowable Contents (continued)

2. Uranium oxide, PWR DAMAGED FUEL ASSEMBLIES, with or without NON-FUEL HARDWARE, placed in DAMAGED FUEL CONTAINERS. Uranium oxide PWR DAMAGED FUEL ASSEMBLIES shall meet the criteria specified in Table 2.1-2 and meet the following specifications (Note 1):

a. Cladding Type:	~~Zircaloy (Zr)~~ *ZR* or Stainless Steel (SS) as specified in Table 2.1-2 for the applicable fuel assembly array/class
b. Initial Enrichment:	~~≤ 4.0 wt% ^{235}U.~~ *As specified in Table 2.1-2 for the applicable fuel assembly array/class.*
c. Post-irradiation Cooling Time and Average Burnup Per Assembly:	
i. Array/Classes 14x14D, 14x14E, and 15x15G	Cooling time ≥ 8 years and an average burnup ≤ 40,000 MWD/MTU.
ii. All Other Array/Classes	As specified in *Section 2.4.* ~~Tables 2.1-4 or 2.1-6.~~
iii. NON-FUEL HARDWARE	As specified in Table 2.1-8.

Table 2.1-1 (page 22 of 339)
Fuel Assembly Limits

IV. MPC MODEL: MPC-24E (continued)

A. Allowable Contents (continued)

d. Decay Heat Per Assembly

i. Array/Classes 14x14D, 14x14E, and 15x15G	≤ 710 Watts.
ii. All Other Array/Classes	As specified in *Section 2.4.* ~~Tables 2.1-5 or 2.1-7.~~
e. Fuel Assembly Length	≤ 176.8 inches (nominal design)
f. Fuel Assembly Width	≤ 8.54 inches (nominal design)
g. Fuel Assembly Weight	≤ 1,680 lbs (including NON-FUEL HARDWARE and DFC)

B. Quantity per MPC: Up to four (4) DAMAGED FUEL ASSEMBLIES in DAMAGED FUEL CONTAINERS, stored in fuel storage locations 3, 6, 19 and/or 22. The remaining MPC-24E fuel storage locations may be filled with PWR INTACT FUEL ASSEMBLIES meeting the applicable specifications.

C. *Neutron sources and* FUEL DEBRIS is *are* not authorized for loading in the MPC-24E.

Note 1: Fuel assemblies containing BPRAs, TPDs, WABAs, water displacement guide tube plugs, ~~or~~ orifice rod assemblies, *or vibration suppressor inserts* may be stored in any fuel cell location. Fuel assemblies containing CRAs, RCCAs, CEAs, or APSRs may only be loaded in fuel storage locations 9, 10, 15, and/or 16. These requirements are in addition to any other requirements specified for uniform or regionalized fuel loading.

Table 2.1-1 (page 23 of 339)
Fuel Assembly Limits

V. MPC MODEL: MPC-32

A. Allowable Contents

1. Uranium oxide, PWR INTACT FUEL ASSEMBLIES listed in Table 2.1-2, with or without NON-FUEL HARDWARE and meeting the following specifications (Note 1):

a. Cladding Type:	~~Zircaloy (Zr)~~ *ZR* or Stainless Steel (SS) as specified in Table 2.1-2 for the applicable fuel assembly array/class
b. Initial Enrichment:	As specified in Table 2.1-2 for the applicable fuel assembly array/class.
c. Post-irradiation Cooling Time and Average Burnup Per Assembly	
i. Array/Classes 14x14D, 14x14E, and 15x15G	Cooling time ≥ 9 years and an average burnup ≤ 30,000 MWD/MTU or cooling time ≥ 20 years and an average burnup ≤ 40,000 MWD/MTU.
ii. All Other Array/Classes	As specified in *Section 2.4.* ~~Tables 2.1-4 or 2.1-6.~~
iii. NON-FUEL HARDWARE	As specified in Table 2.1-8.

Table 2.1-1 (page 24 of 339)
Fuel Assembly Limits

V. MPC MODEL: MPC-32 (continued)

A. Allowable Contents (continued)

d. Decay Heat Per Assembly	
i. Array/Classes 14x14D, 14x14E, and 15x15G	≤ 500 Watts
ii. All Other Array/Classes	As specified in *Section 2.4*. ~~Tables 2.1-5 or 2.1-7.~~
e. Fuel Assembly Length	≤ 176.8 inches (nominal design)
f. Fuel Assembly Width	≤ 8.54 inches (nominal design)
g. Fuel Assembly Weight	≤ 1,680 lbs (including NON-FUEL HARDWARE)

Table 2.1-1 (page 245 of 339)
Fuel Assembly Limits

V. MPC MODEL: MPC-32 (continued)

A. Allowable Contents (continued)

2. Uranium oxide, PWR DAMAGED FUEL ASSEMBLIES, with or without NON-FUEL HARDWARE, placed in DAMAGED FUEL CONTAINERS. Uranium oxide PWR DAMAGED FUEL ASSEMBLIES shall meet the criteria specified in Table 2.1-2 and meet the following specifications (Note 1):

a. Cladding Type:	*ZR or Stainless Steel (SS) as specified in Table 2.1-2 for the applicable fuel assembly array/class*
b. Initial Enrichment:	*As specified in Table 2.1-2 for the applicable fuel assembly array/class.*
c. Post-irradiation Cooling Time and Average Burnup Per Assembly	
i. Array/Classes 14x14D, 14x14E, and 15x15G	*Cooling time ≥ 8 years and an average burnup ≤ 40,000 MWD/MTU.*
ii. All Other Array/Classes	*As specified in Section 2.4.*
iii. NON-FUEL HARDWARE	*As specified in Table 2.1-8.*

Table 2.1-1 (page 226 of 339)
Fuel Assembly Limits

V. MPC MODEL: MPC-32 (continued)

A. Allowable Contents (continued)

d. Decay Heat Per Assembly	
i. Array/Classes 14x14D, 14x14E, and 15x15G	*≤ 500 Watts.*
ii. All Other Array/Classes	*As specified in Section 2.4.*
e. Fuel Assembly Length	*≤ 176.8 inches (nominal design)*
f. Fuel Assembly Width	*≤ 8.54 inches (nominal design)*
g. Fuel Assembly Weight	*≤ 1,680 lbs (including NON-FUEL HARDWARE and DFC)*

B. Quantity per MPC: *Up to eight (8) DAMAGED FUEL ASSEMBLIES in DAMAGED FUEL CONTAINERS, stored in fuel storage locations 1, 4, 5, 10, 23, 28, 29, and/or 32. The remaining MPC-32 fuel storage locations may be filled with PWR INTACT FUEL ASSEMBLIES meeting the applicable specifications.*

C. ~~DAMAGED FUEL ASSEMBLIES and~~ *Neutron sources and* FUEL DEBRIS are not authorized for loading in the MPC-32.

Note 1: Fuel assemblies containing BPRAs, TPDs, WABAs, water displacement guide tube plugs, ~~or~~ orifice rod assemblies, *or vibration suppressor inserts* may be stored in any fuel cell location. Fuel assemblies containing CRAs, RCCAs, CEAs, or APSRs may only be loaded in fuel storage locations 13, 14, 19, and/or 20. These requirements are in addition to any other requirements specified for uniform or regionalized fuel loading.

Table 2.1-1 (page 257 of 339)
Fuel Assembly Limits

VI. MPC MODEL: MPC-68FF

A. Allowable Contents

1. Uranium oxide or MOX BWR INTACT FUEL ASSEMBLIES listed in Table 2.1-3, with or without channels and meeting the following specifications:

a. Cladding Type:	~~Zircaloy (Zr)~~ *ZR* or Stainless Steel (SS) as specified in Table 2.1-3 for the applicable fuel assembly array/class
b. Maximum PLANAR-AVERAGE INITIAL ENRICHMENT:	As specified in Table 2.1-3 for the applicable fuel assembly array/class.
c. Initial Maximum Rod Enrichment	As specified in Table 2.1-3 for the applicable fuel assembly array/class.
d. Post-irradiation Cooling Time and Average Burnup Per Assembly	
i. Array/Classes 6x6A, 6x6B, 6x6C, 7x7A, and 8x8A	Cooling time ≥ 18 years and an average burnup ≤ 30,000 MWD/MTU (or MTU/MTIHM).
ii. Array/Class 8x8F	Cooling time ≥ 10 years and an average burnup ≤ 27,500 MWD/MTU.
iii. Array/Classes 10x10D and 10x10E	Cooling time ≥ 10 years and an average burnup ≤ 22,500 MWD/MTU.
iv. All Other Array/Classes	As specified in *Section 2.4.* ~~Tables 2.1-4 or 2.1-6.~~

Table 2.1-1 (page 268 of 339)
Fuel Assembly Limits

VI. MPC MODEL: MPC-68FF (continued)

A. Allowable Contents (continued)

e. Decay Heat Per Assembly

i. Array/Classes 6x6A, 6X6b, 6x6C, 7x7A, and 8x8A	≤ 115 Watts
ii. Array/Class 8x8F	≤ 183.5 Watts
iii. Array/Classes 10x10D and 10x10E	≤ 95 Watts
iv. All Other Array/Classes	As specified in *Section 2.4.* ~~Tables 2.1-5 or 2.1-7.~~

f. Fuel Assembly Length

i. Array/Class 6x6A, 6x6B, 6x6C, 7x7A, or 8x8A	≤ 135.0 inches (nominal design)
ii. All Other Array/Classes	≤ 176.5 inches (nominal design)

g. Fuel Assembly Width

i. Array/Class 6x6A, 6x6B, 6x6C, 7x7A, or 8x8A	≤ 4.70 inches (nominal design)
ii. All Other Array/Classes	≤ 5.85 inches (nominal design)

h. Fuel Assembly Weight

i. Array/Class 6x6A, 6x6B, 6x6C, 7x7A, or 8x8A	≤ 550 lbs, including channels ~~and DFC~~
ii. All Other Array/Classes	≤ 700 lbs, including channels ~~and DFC~~

Table 2.1-1 (page ~~279~~ of ~~339~~)
Fuel Assembly Limits

VI. MPC MODEL: MPC-68FF (continued)

A. Allowable Contents (continued)

2. Uranium oxide or MOX BWR DAMAGED FUEL ASSEMBLIES or FUEL DEBRIS, with or without channels, placed in DAMAGED FUEL CONTAINERS. Uranium oxide and MOX BWR DAMAGED FUEL ASSEMBLIES and FUEL DEBRIS shall meet the criteria specified in Table 2.1-3, and meet the following specifications:

a. Cladding Type:	~~Zircaloy (Zr)~~ *ZR* or Stainless Steel (SS) in accordance with Table 2.1-3 for the applicable fuel assembly array/class.
b. Maximum PLANAR-AVERAGE INITIAL ENRICHMENT:	
i. Array/Classes 6x6A, 6x6B, 6x6C, 7x7A, and 8x8A.	As specified in Table 2.1-3 for the applicable fuel assembly array/class.
ii. All Other Array Classes	≤ 4.0 wt.% ^{235}U.
c. Initial Maximum Rod Enrichment	As specified in Table 2.1-3 for the applicable fuel assembly array/class.
d. Post-irradiation Cooling Time and Average Burnup Per Assembly:	
i. Array/Class 6x6A, 6x6B, 6x6C, 7x7A, or 8x8A	Cooling time ≥ 18 years and an average burnup ≤ 30,000 MWD/MTU (or MWD/MTIHM).
ii. Array/Class 8x8F	Cooling time ≥ 10 years and an average burnup ≤ 27,500 MWD/MTU.
iii. Array/Class 10x10D and 10x10E	Cooling time ≥ 10 years and an average burnup ≤ 22,500 MWD/MTU.
iv. All Other Array/Classes	As specified in *Section 2.4.* ~~Tables 2.1-4 or 2.1-6.~~

Table 2.1-1 (page ~~28~~ *30* of 339)
Fuel Assembly Limits

VI. MPC MODEL: MPC-68FF (continued)

A. Allowable Contents (continued)

e. Decay Heat Per Assembly

i.	Array/Class 6x6A, 6x6B, 6x6C, 7x7A, or 8x8A	≤ 115 Watts
ii.	Array/Class 8x8F	≤ 183.5 Watts
iii.	Array/Classes 10x10D and 10x10E	≤ 95 Watts
iv.	All Other Array/Classes	As specified in *Section 2.4.* ~~Tables 2.1-5 or 2.1-7~~

f. Fuel Assembly Length

i.	Array/Class 6x6A, 6x6B, 6x6C, 7x7A, or 8x8A	≤ 135.0 inches (nominal design)
ii.	All Other Array/Classes	≤ 176.5 inches (nominal design)

g. Fuel Assembly Width

i.	Array/Class 6x6A, 6x6B, 6x6C, 7x7A, or 8x8A	≤ 4.70 inches (nominal design)
ii.	All Other Array/Classes	≤ 5.85 inches (nominal design)

h. Fuel Assembly Weight

i.	Array/Class 6x6A, 6x6B, 6x6C, 7x7A, or 8x8A	≤ 550 lbs, including channels and DFC
ii.	All Other Array/Classes	≤ 700 lbs, including channels and DFC

Table 2.1-1 (page ~~29~~ *31* of ~~33~~*9*)
Fuel Assembly limits

VI. MPC MODEL: MPC-68FF (continued)

B. Quantity per MPC (up to a total of 68 assemblies)

1. For fuel assembly array/classes 6x6A, 6X6B, 6x6C, 7x7A, or 8x8A, up to 68 BWR INTACT FUEL ASSEMBLIES and/or DAMAGED FUEL ASSEMBLIES. Up to eight (8) DFCs containing FUEL DEBRIS from these array/classes may be stored.

2. For all other array/classes, up to sixteen (16) DFCs containing BWR DAMAGED FUEL ASSEMBLIES and/or up to eight (8) DFCs containing FUEL DEBRIS. DFCs shall be located only in fuel storage locations 1, 2, 3, 8, 9, 16, 25, 34, 35, 44, 53, 60, 61, 66, 67, and/or 68. The remaining MPC-68FF fuel storage locations may be filled with fuel assemblies of the following type:

   i. Uranium Oxide BWR INTACT FUEL ASSEMBLIES; or

   ii. MOX BWR INTACT FUEL ASSEMBLIES.

C. Dresden Unit 1 fuel assemblies with one Antimony-Beryllium neutron source are authorized for loading in the MPC-68FF. The Antimony-Beryllium source material shall be in a water rod location.

D. Array/Class 10x10D and 10x10E fuel assemblies in stainless steel channels must be stored in fuel storage locations 19 - 22, 28 - 31, 38 -41, and/or 47 - 50.

Table 2.1-1 (page 302 of 339)
Fuel Assembly Limits

VII. MPC MODEL: MPC-24EF

A. Allowable Contents

1. Uranium oxide, PWR INTACT FUEL ASSEMBLIES listed in Table 2.1-2, with or without NON-FUEL HARDWARE and meeting the following specifications (Note 1):

a. Cladding Type:	~~Zircaloy (Zr)~~ *ZR* or Stainless Steel (SS) as specified in Table 2.1-2 for the applicable fuel assembly array/class
b. Initial Enrichment:	As specified in Table 2.1-2 for the applicable fuel assembly array/class.
c. Post-irradiation Cooling Time and Average Burnup Per Assembly:	
i. Array/Classes 14x14D, 14x14E, and 15x15G	Cooling time ≥ 8 years and an average burnup ≤ 40,000 MWD/MTU.
ii. All Other Array/Classes	As specified in *Section 2.4.* ~~Tables 2.1-4 or 2.1-6.~~
iii. NON-FUEL HARDWARE	As specified in Table 2.1-8.

Table 2.1-1 (page ~~313~~ of ~~339~~)
Fuel Assembly Limits

VII. MPC MODEL: MPC-24EF (continued)

A. Allowable Contents (continued)

d. Decay Heat Per Assembly:

i. Array/Classes 14x14D, 14x14E, and 15x15G	≤ 710 Watts.
ii. All other Array/Classes	As specified in *Section 2.4.* ~~Tables 2.1-5 or 2.1-7.~~
e. Fuel Assembly Length:	≤ 176.8 inches (nominal design)
f. Fuel Assembly Width:	≤ 8.54 inches (nominal design)
g. Fuel Assembly Weight:	≤ 1,680 lbs (including NON-FUEL HARDWARE)

Table 2.1-1 (page ~~32~~*4* of ~~33~~*9*)
Fuel Assembly Limits

VII. MPC MODEL: MPC-24EF (continued)

A. Allowable Contents (continued)

2. Uranium oxide, PWR DAMAGED FUEL ASSEMBLIES and FUEL DEBRIS, with or without NON-FUEL HARDWARE, placed in DAMAGED FUEL CONTAINERS. Uranium oxide PWR DAMAGED FUEL ASSEMBLIES and FUEL DEBRIS shall meet the criteria specified in Table 2.1-2 and meet the following specifications (Note 1):

a. Cladding Type:	~~Zircaloy (Zr)~~ *ZR* or Stainless Steel (SS) as specified in Table 2.1-2 for the applicable fuel assembly array/class
b. Initial Enrichment:	~~≤ 4.0 wt% ^{235}U.~~ *As specified in Table 2.1-2 for the applicable fuel assembly array/class.*
c. Post-irradiation Cooling Time and Average Burnup Per Assembly:	
i. Array/Classes 14x14D, 14x14E, and 15x15G	Cooling time ≥ 8 years and an average burnup ≤ 40,000 MWD/MTU.
ii. All Other Array/Classes	As specified in *Section 2.4.* ~~Tables 2.1-4 or 2.1-6.~~
iii. NON-FUEL HARDWARE	As specified in Table 2.1-8.

Table 2.1-1 (page 335 of 339)
Fuel Assembly Limits

VII. MPC MODEL: MPC-24EF (continued)

A. Allowable Contents (continued)

d. Decay Heat Per Assembly

i. Array/Classes 14x14D, 14x14E, and 15x15G	≤ 710 Watts.
ii. All Other Array/Classes	As specified in *Section 2.4.* ~~Tables 2.1-5 or 2.1-7.~~
e. Fuel Assembly Length	≤ 176.8 inches (nominal design)
f. Fuel Assembly Width	≤ 8.54 inches (nominal design)
g. Fuel Assembly Weight	≤ 1,680 lbs (including NON-FUEL HARDWARE and DFC)

B. Quantity per MPC: Up to four (4) DAMAGED FUEL ASSEMBLIES and/or FUEL DEBRIS in DAMAGED FUEL CONTAINERS, stored in fuel storage locations 3, 6, 19 and/or 22. The remaining MPC-24E*F* fuel storage locations may be filled with PWR INTACT FUEL ASSEMBLIES meeting the applicable specifications.

C. Neutron sources are not authorized for loading in the MPC-24EF.

Note 1: Fuel assemblies containing BPRAs, TPDs, WABAs, water displacement guide tube plugs, ~~or~~ orifice rod assemblies*, or vibration suppressor inserts* may be stored in any fuel cell location. Fuel assemblies containing CRAs, RCCAs, CEAs, or APSRs may only be loaded in fuel storage locations 9, 10, 15, and/or 16. These requirements are in addition to any other requirements specified for uniform or regionalized fuel loading.

Table 2.1-1 (page 36 of 39)
Fuel Assembly Limits

VIII. MPC MODEL: MPC-32F

A. Allowable Contents

1. Uranium oxide, PWR INTACT FUEL ASSEMBLIES listed in Table 2.1-2, with or without NON-FUEL HARDWARE and meeting the following specifications (Note 1):

a. Cladding Type:	*ZR or Stainless Steel (SS) as specified in Table 2.1-2 for the applicable fuel assembly array/class*
b. Initial Enrichment:	*As specified in Table 2.1-2 for the applicable fuel assembly array/class.*
c. Post-irradiation Cooling Time and Average Burnup Per Assembly:	
i. Array/Classes 14x14D, 14x14E, and 15x15G	*Cooling time ≥ 8 years and an average burnup ≤ 40,000 MWD/MTU.*
ii. All Other Array/Classes	*As specified in Section 2.4.*
iii. NON-FUEL HARDWARE	*As specified in Table 2.1-8.*

Table 2.1-1 (page 37 of 39)
Fuel Assembly Limits

VIII. MPC MODEL: MPC-32F (cont'd)

A. Allowable Contents (cont'd)

d. Decay Heat Per Assembly	
i. Array/Classes 14x14D, 14x14E, and 15x15G	*≤ 500 Watts.*
ii. All Other Array/Classes	*As specified in Section 2.4.*
e. Fuel Assembly Length	*≤ 176.8 inches (nominal design)*
f. Fuel Assembly Width	*≤ 8.54 inches (nominal design)*
g. Fuel Assembly Weight	*≤ 1,680 lbs (including NON-FUEL HARDWARE)*

Table 2.1-1 (page 38 of 39)
Fuel Assembly Limits

VIII. MPC MODEL: MPC-32F (cont'd)

A. Allowable Contents (cont'd)

2. Uranium oxide, PWR DAMAGED FUEL ASSEMBLIES and FUEL DEBRIS, with or without NON-FUEL HARDWARE, placed in DAMAGED FUEL CONTAINERS. Uranium oxide PWR DAMAGED FUEL ASSEMBLIES and FUEL DEBRIS shall meet the criteria specified in Table 2.1-2 and meet the following specifications (Note 1):

a. Cladding Type:	*ZR or Stainless Steel (SS) as specified in Table 2.1-2 for the applicable fuel assembly array/class*
b. Initial Enrichment:	*As specified in Table 2.1-2 for the applicable fuel assembly array/class.*
c. Post-irradiation Cooling Time and Average Burnup Per Assembly:	
i. Array/Classes 14x14D, 14x14E, and 15x15G	*Cooling time ≥ 8 years and an average burnup ≤ 40,000 MWD/MTU.*
ii. All Other Array/Classes	*As specified in Section 2.4.*
iii. NON-FUEL HARDWARE	*As specified in Table 2.1-8.*

Table 2.1-1 (page 39 of 39)
Fuel Assembly Limits

VIII. MPC MODEL: MPC-32F (cont'd)

A. Allowable Contents (cont'd)

d. Decay Heat Per Assembly

i. Array/Classes 14x14D, 14x14E, and 15x15G	*≤ 500 Watts.*
ii. All Other Array/Classes	*As specified in Section 2.4.*
e. Fuel Assembly Length	*≤ 176.8 inches (nominal design)*
f. Fuel Assembly Width	*≤ 8.54 inches (nominal design)*
g. Fuel Assembly Weight	*≤ 1,680 lbs (including NON-FUEL HARDWARE and DFC)*

B. Quantity per MPC: Up to eight (8) DAMAGED FUEL ASSEMBLIES and/or FUEL DEBRIS in DAMAGED FUEL CONTAINERS, stored in fuel storage locations 1, 4, 5, 10, 23, 28, 29, and/or 32. The remaining MPC-32F fuel storage locations may be filled with PWR INTACT FUEL ASSEMBLIES meeting the applicable specifications.

C. Neutron Sources are not authorized for loading in the MPC-32F.

Note 1: Fuel assemblies containing BPRAs, TPDs, WABAs, water displacement guide tube plugs, orifice rod assemblies, or vibration suppressor inserts may be stored in any fuel cell location. Fuel assemblies containing CRAs, RCCAs, CEAs, or APSRs may only be loaded in fuel storage locations 13, 14, 19 and/or 20. These requirements are in addition to any other requirements specified for uniform or regionalized fuel loading.

Table 2.1-2 (page 1 of 4)
PWR FUEL ASSEMBLY CHARACTERISTICS (Note 1)

Fuel Assembly Array/Class	14x14A	14x14B	14x14C	14x14D	14x14E
Clad Material ~~(Note 2)~~	~~Zr~~ *ZR*	~~Zr~~ *ZR*	~~Zr~~ *ZR*	SS	SS
Design Initial U (kg/assy.) (Note 3)	≤ ~~407~~ *365*	≤ ~~407~~ *412*	≤ ~~425~~ *438*	≤ 400	≤ 206
Initial Enrichment (MPC-24, 24E and 24EF without soluble boron credit) (wt % ^{235}U) (Note 7)	≤ 4.6 (24) ≤ 5.0 (24E/24EF)	≤ 4.6 (24) ≤ 5.0 (24E/24EF)	≤ 4.6 (24) ≤ 5.0 (24E/24EF)	≤ 4.0 (24) ≤ 5.0 (24E/24EF)	≤ 5.0 (24) ≤ 5.0 (24E/24EF)
Initial Enrichment (MPC-24, 24E, 24EF, 32, or *32F* with soluble boron credit - see Notes 5 ~~and 7~~) (wt % ^{235}U)	≤ 5.0	≤ 5.0	≤ 5.0	≤ 5.0	≤ 5.0
No. of Fuel Rod Locations	179	179	176	180	173
Fuel Rod Clad O.D. (in.)	≥ 0.400	≥ 0.417	≥ 0.440	≥ 0.422	≥ 0.3415
Fuel Rod Clad I.D. (in.)	≤ 0.3514	≤ 0.3734	≤ 0.3880	≤ 0.3890	≤ 0.3175
Fuel Pellet Dia. (in.)	≤ 0.3444	≤ 0.3659	≤ 0.3805	≤ 0.3835	≤ 0.3130
Fuel Rod Pitch (in.)	≤ 0.556	≤ 0.556	≤ 0.580	≤ 0.556	Note 6
Active Fuel Length (in.)	≤ 150	≤ 150	≤ 150	≤ 144	≤ 102
No. of Guide and/or Instrument Tubes	17	17	5 (Note 4)	16	0
Guide/Instrument Tube Thickness (in.)	≥ 0.017	≥ 0.017	≥ 0.038	≥ 0.0145	N/A

Table 2.1-2 (page 2 of 4)
PWR FUEL ASSEMBLY CHARACTERISTICS (Note 1)

Fuel Assembly Array/Class	15x15A	15x15B	15x15C	15x15D	15x15E	15x15F
Clad Material ~~(Note 2)~~	~~Zr~~ *ZR*	~~Zr~~ *ZR*	~~Zr~~ *ZR*	~~Zr~~ *ZR*	~~Zr~~ *ZR*	~~Zr~~ *ZR*
Design Initial U (kg/assy.) (Note 3)	≤ ~~464~~ *473*	≤ ~~464~~ *473*	≤ ~~464~~ *473*	≤ ~~475~~ *495*	≤ ~~475~~ *495*	≤ ~~475~~ *495*
Initial Enrichment (MPC-24, 24E and 24EF without soluble boron credit) (wt % ^{235}U) (Note 7)	≤ 4.1 (24) ≤ 4.5 (24E/24EF)	≤ 4.1 (24) ≤ 4.5 (24E/24EF)	≤ 4.1 (24) ≤ 4.5 (24E/24EF)	≤ 4.1 (24) ≤ 4.5 (24E/24EF)	≤ 4.1 (24) ≤ 4.5 (24E/24EF)	≤ 4.1 (24) ≤ 4.5 (24E/24EF)
Initial Enrichment (MPC-24, 24E, 24EF, 32, or *32F* with soluble boron credit - see Notes 5 ~~and 7~~) (wt % ^{235}U)	≤ 5.0	≤ 5.0	≤ 5.0	≤ 5.0	≤ 5.0	≤ 5.0
No. of Fuel Rod Locations	204	204	204	208	208	208
Fuel Rod Clad O.D. (in.)	≥ 0.418	≥ 0.420	≥ 0.417	≥ 0.430	≥ 0.428	≥ 0.428
Fuel Rod Clad I.D. (in.)	≤ 0.3660	≤ 0.3736	≤ 0.3640	≤ 0.3800	≤ 0.3790	≤ 0.3820
Fuel Pellet Dia. (in.)	≤ 0.3580	≤ 0.3671	≤ 0.3570	≤ 0.3735	≤ 0.3707	≤ 0.3742
Fuel Rod Pitch (in.)	≤ 0.550	≤ 0.563	≤ 0.563	≤ 0.568	≤ 0.568	≤ 0.568
Active Fuel Length (in.)	≤ 150	≤ 150	≤ 150	≤ 150	≤ 150	≤ 150
No. of Guide and/or Instrument Tubes	21	21	21	17	17	17
Guide/Instrument Tube Thickness (in.)	≥ 0.0165	≥ 0.015	≥ 0.0165	≥ 0.0150	≥ 0.0140	≥ 0.0140

Table 2.1-2 (page 3 of 4)
PWR FUEL ASSEMBLY CHARACTERISTICS (Note 1)

Fuel Assembly Array/ Class	15x15G	15x15H	16x16A	17x17A	17x17B	17x17C
Clad Material ~~(Note 2)~~	SS	~~Zr~~ *ZR*	~~Zr~~ *ZR*	~~Zr~~ *ZR*	~~Zr~~ *ZR*	~~Zr~~ *ZR*
Design Initial U (kg/assy.) (Note 3)	≤ 420	≤ ~~475~~ *495*	≤ ~~443~~ *448*	≤ ~~467~~ *433*	≤ ~~467~~ *474*	≤ ~~474~~ *480*
Initial Enrichment (MPC-24, 24E, and 24EF without soluble boron credit) (wt % ^{235}U) (Note 7)	≤ 4.0 (24) ≤ 4.5 (24E/24EF)	≤ 3.8 (24) ≤ 4.2 (24E/24EF)	≤ 4.6 (24) ≤ 5.0 (24E/24EF)	≤ 4.0 (24) ≤ 4.4 (24E/24EF)	≤ 4.0 (24) ≤ 4.4 (24E/24EF)	≤ 4.0 (24) ≤ 4.4 (24E/24EF)
Initial Enrichment (MPC-24, 24E, 24EF, 32, or *32F* with soluble boron credit - see Notes 5 ~~and 7~~) (wt % ^{235}U)	≤ 5.0	≤ 5.0	≤ 5.0	≤ 5.0	≤ 5.0	≤ 5.0
No. of Fuel Rod Locations	204	208	236	264	264	264
Fuel Rod Clad O.D. (in.)	≥ 0.422	≥ 0.414	≥ 0.382	≥ 0.360	≥ 0.372	≥ 0.377
Fuel Rod Clad I.D. (in.)	≤ 0.3890	≤ 0.3700	≤ 0.3320	≤ 0.3150	≤ 0.3310	≤ 0.3330
Fuel Pellet Dia. (in.)	≤ 0.3825	≤ 0.3622	≤ 0.3255	≤ 0.3088	≤ 0.3232	≤ 0.3252
Fuel Rod Pitch (in.)	≤ 0.563	≤ 0.568	≤ 0.506	≤ 0.496	≤ 0.496	≤ 0.502
Active Fuel Length (in.)	≤ 144	≤ 150	≤ 150	≤ 150	≤ 150	≤ 150
No. of Guide and/or Instrument Tubes	21	17	5 (Note 4)	25	25	25
Guide/Instrument Tube Thickness (in.)	≥ 0.0145	≥ 0.0140	≥ 0.0400	≥ 0.016	≥ 0.014	≥ 0.020

Table 2.1-2 (page 4 of 4)
PWR FUEL ASSEMBLY CHARACTERISTICS

Notes:

1. All dimensions are design nominal values. Maximum and minimum dimensions are specified to bound variations in design nominal values among fuel assemblies within a given array/class.

2. ~~Zr designates cladding material made of zirconium or zirconium alloys~~ *Deleted.*

3. Design initial uranium weight is the nominal uranium weight specified for each assembly by the fuel manufacturer or reactor user. For each PWR fuel assembly, the total uranium weight limit specified in this table may be increased up to 2.0 percent for comparison with users' fuel records to account for manufacturer's tolerances.

4. Each guide tube replaces four fuel rods.

5. Soluble boron concentration per LCO 3.3.1.

6. This fuel assembly array/class includes only the Indian Point Unit 1 fuel assembly. This fuel assembly has two pitches in different sectors of the assembly. These pitches are 0.441 inches and 0.453 inches.

7. For those MPCs loaded with both INTACT FUEL ASSEMBLIES and DAMAGED FUEL ASSEMBLIES or FUEL DEBRIS, the maximum initial enrichment of the INTACT FUEL ASSEMBLIES, DAMAGED FUEL ASSEMBLIES and FUEL DEBRIS is 4.0 wt.% ^{235}U.

Table 2.1-3 (page 1 of 5)
BWR FUEL ASSEMBLY CHARACTERISTICS (Note 1)

Fuel Assembly Array/Class	6x6A	6x6B	6x6C	7x7A	7x7B	8x8A
Clad Material ~~(Note 2)~~	~~Zr~~ *ZR*	~~Zr~~ *ZR*	~~Zr~~ *ZR*	~~Zr~~ *ZR*	~~Zr~~ *ZR*	~~Zr~~ *ZR*
Design Initial U (kg/assy.) (Note 3)	≤ 110	≤ 110	≤ 110	≤ 100	≤ ~~495~~ *198*	≤ 120
Maximum PLANAR-AVERAGE INITIAL ENRICHMENT (wt.% ^{235}U) (Note 14)	≤ 2.7	≤ 2.7 for the UO_2 rods. See Note 4 for MOX rods	≤ 2.7	≤ 2.7	≤ 4.2	≤ 2.7
Initial Maximum Rod Enrichment (wt.% ^{235}U)	≤ 4.0	≤ 4.0	≤ 4.0	≤ 5.5	≤ 5.0	≤ 4.0
No. of Fuel Rod Locations	35 or 36	35 or 36 (up to 9 MOX rods)	36	49	49	63 or 64
Fuel Rod Clad O.D. (in.)	≥ 0.5550	≥ 0.5625	≥ 0.5630	≥ 0.4860	≥ 0.5630	≥ 0.4120
Fuel Rod Clad I.D. (in.)	≤ 0.5105	≤ 0.4945	≤ 0.4990	≤ 0.4204	≤ 0.4990	≤ 0.3620
Fuel Pellet Dia. (in.)	≤ 0.4980	≤ 0.4820	≤ 0.4880	≤ 0.4110	≤ 0.4910	≤ 0.3580
Fuel Rod Pitch (in.)	≤ 0.710	≤ 0.710	≤ 0.740	≤ 0.631	≤ 0.738	≤ 0.523
Active Fuel Length (in.)	≤ 120	≤ 120	≤ 77.5	≤ 80	≤ 150	≤ 120
No. of Water Rods (Note 11)	1 or 0	1 or 0	0	0	0	1 or 0
Water Rod Thickness (in.)	> 0	> 0	N/A	N/A	N/A	≥ 0
Channel Thickness (in.)	≤ 0.060	≤ 0.060	≤ 0.060	≤ 0.060	≤ 0.120	≤ 0.100

Table 2.1-3 (2 of 5)
BWR FUEL ASSEMBLY CHARACTERISTICS (Note 1)

Fuel Assembly Array/Class	8x8B	8x8C	8x8D	8x8E	8x8F	9x9A
Clad Material ~~(Note 2)~~	~~Zr~~ *ZR*	~~Zr~~ *ZR*	~~Zr~~ *ZR*	~~Zr~~ *ZR*	~~Zr~~ *ZR*	~~Zr~~ *ZR*
Design Initial U (kg/assy.) (Note 3)	≤ ~~191~~ *152*	≤ ~~191~~ *190*	≤ ~~191~~ *190*	< ~~191~~ *190*	≤ 191	≤ ~~179~~ *180*
Maximum PLANAR-AVERAGE INITIAL ENRICHMENT (wt.% ^{235}U) (Note 14)	≤ 4.2	≤ 4.2	≤ 4.2	≤ 4.2	≤ 4.0	≤ 4.2
Initial Maximum Rod Enrichment (wt.% ^{235}U)	≤ 5.0	≤ 5.0	≤ 5.0	≤ 5.0	≤ 5.0	≤ 5.0
No. of Fuel Rod Locations	63 or 64	62	60 or 61	59	64	74/66 (Note 5)
Fuel Rod Clad O.D. (in.)	≥ 0.4840	≥ 0.4830	≥ 0.4830	≥ 0.4930	≥ 0.4576	≥ 0.4400
Fuel Rod Clad I.D. (in.)	≤ 0.4295	≤ 0.4250	≤ 0.4230	≤ 0.4250	≤ 0.3996	≤ 0.3840
Fuel Pellet Dia. (in.)	≤ 0.4195	≤ 0.4160	≤ 0.4140	≤ 0.4160	≤ 0.3913	≤ 0.3760
Fuel Rod Pitch (in.)	≤ 0.642	≤ 0.641	≤ 0.640	≤ 0.640	≤ 0.609	≤ 0.566
Design Active Fuel Length (in.)	≤ 150	≤ 150	≤ 150	≤ 150	≤ 150	≤ 150
No. of Water Rods (Note 11)	1 or 0	2	1 - 4 (Note 7)	5	N/A (Note 12)	2
Water Rod Thickness (in.)	≥ 0.034	> 0.00	> 0.00	≥ 0.034	≥ 0.0315	> 0.00
Channel Thickness (in.)	≤ 0.120	≤ 0.120	≤ 0.120	≤ 0.100	≤ 0.055	≤ 0.120

Table 2.1-3 (page 3 of 5)
BWR FUEL ASSEMBLY CHARACTERISTICS (Note 1)

Fuel Assembly Array/Class	9x9B	9x9C	9x9D	9x9E (Note 13)	9x9F (Note 13)	9x9G
Clad Material ~~(Note 2)~~	~~Zr~~ *ZR*	~~Zr~~ *ZR*	~~Zr~~ *ZR*	~~Zr~~ *ZR*	~~Zr~~ *ZR*	~~Zr~~ *ZR*
Design Initial U (kg/assy.) (Note 3)	≤ ~~479~~ *180*	≤ ~~479~~ *182*	≤ ~~479~~ *182*	≤ ~~479~~ *183*	≤ ~~479~~ *183*	≤ ~~479~~ *164*
Maximum PLANAR-AVERAGE INITIAL ENRICHMENT (wt.% ^{235}U) (Note 14)	≤ 4.2	≤ 4.2	≤ 4.2	≤ 4.0	≤ 4.0	≤ 4.2
Initial Maximum Rod Enrichment (wt.% ^{235}U)	≤ 5.0	≤ 5.0	≤ 5.0	≤ 5.0	≤ 5.0	≤ 5.0
No. of Fuel Rod Locations	72	80	79	76	76	72
Fuel Rod Clad O.D. (in.)	≥ 0.4330	≥ 0.4230	≥ 0.4240	≥ 0.4170	≥ 0.4430	≥ 0.4240
Fuel Rod Clad I.D. (in.)	≤ 0.3810	≤ 0.3640	≤ 0.3640	≤ 0.3640	≤ 0.3860	≤ 0.3640
Fuel Pellet Dia. (in.)	≤ 0.3740	≤ 0.3565	≤ 0.3565	≤ 0.3530	≤ 0.3745	≤ 0.3565
Fuel Rod Pitch (in.)	≤ 0.572	≤ 0.572	≤ 0.572	≤ 0.572	≤ 0.572	≤ 0.572
Design Active Fuel Length (in.)	≤ 150	≤ 150	≤ 150	≤ 150	≤ 150	≤ 150
No. of Water Rods (Note 11)	1 (Note 6)	1	2	5	5	1 (Note 6)
Water Rod Thickness (in.)	> 0.00	≥ 0.020	≥ 0.0300	≥ 0.0120	≥ 0.0120	≥ 0.0320
Channel Thickness (in.)	≤ 0.120	≤ 0.100	≤ 0.100	≤ 0.120	≤ 0.120	≤ 0.120

Table 2.1-3 (page 4 of 5)
BWR FUEL ASSEMBLY CHARACTERISTICS (Note 1)

Fuel Assembly Array/Class	10x10A	10x10B	10x10C	10x10D	10x10E
Clad Material ~~(Note 2)~~	~~Zr~~ *ZR*	~~Zr~~ *ZR*	~~Zr~~ *ZR*	SS	SS
Design Initial U (kg/assy.) (Note 3)	≤ 188	≤ 188	≤ ~~188~~ *179*	≤ 125	≤ 125
Maximum PLANAR-AVERAGE INITIAL ENRICHMENT (wt.% ^{235}U) (Note 14)	≤ 4.2	≤ 4.2	≤ 4.2	≤ 4.0	≤ 4.0
Initial Maximum Rod Enrichment (wt.% ^{235}U)	≤ 5.0	≤ 5.0	≤ 5.0	≤ 5.0	≤ 5.0
No. of Fuel Rod Locations	92/78 (Note 8)	91/83 (Note 9)	96	100	96
Fuel Rod Clad O.D. (in.)	≥ 0.4040	≥ 0.3957	≥ 0.3780	≥ 0.3960	≥ 0.3940
Fuel Rod Clad I.D. (in.)	≤ 0.3520	≤ 0.3480	≤ 0.3294	≤ 0.3560	≤ 0.3500
Fuel Pellet Dia. (in.)	≤ 0.3455	≤ 0.3420	≤ 0.3224	≤ 0.3500	≤ 0.3430
Fuel Rod Pitch (in.)	≤ 0.510	≤ 0.510	≤ 0.488	≤ 0.565	≤ 0.557
Design Active Fuel Length (in.)	≤ 150	≤ 150	≤ 150	≤ 83	≤ 83
No. of Water Rods (Note 11)	2	1 (Note 6)	5 (Note 10)	0	4
Water Rod Thickness (in.)	≥ 0.0300	> 0.00	≥ 0.031	N/A	≥ 0.022
Channel Thickness (in.)	≤ 0.120	≤ 0.120	≤ 0.055	≤ 0.080	≤ 0.080

Table 2.1-3 (page 5 of 5)
BWR FUEL ASSEMBLY CHARACTERISTICS

Notes:

1. All dimensions are design nominal values. Maximum and minimum dimensions are specified to bound variations in design nominal values among fuel assemblies within a given array/class.

2. ~~Zr designates cladding material made of zirconium or zirconium alloys~~ *Deleted.*

3. Design initial uranium weight is the nominal uranium weight specified for each assembly by the fuel manufacturer or reactor user. For each BWR fuel assembly, the total uranium weight limit specified in this table may be increased up to 1.5 percent for comparison with users' fuel records to account for manufacturer tolerances.

4. $\leq$ 0.635 wt. % ^{235}U and $\leq$ 1.578 wt. % total fissile plutonium (^{239}Pu and ^{241}Pu), (wt. % of total fuel weight, i.e., UO_2 plus PuO_2).

5. This assembly class contains 74 total rods; 66 full length rods and 8 partial length rods.

6. Square, replacing nine fuel rods.

7. Variable.

8. This assembly contains 92 total fuel rods; 78 full length rods and 14 partial length rods.

9. This assembly class contains 91 total fuel rods; 83 full length rods and 8 partial length rods.

10. One diamond-shaped water rod replacing the four center fuel rods and four rectangular water rods dividing the assembly into four quadrants.

11. These rods may also be sealed at both ends and contain Zr material in lieu of water.

12. This assembly is known as "QUAD+." It has four rectangular water cross segments dividing the assembly into four quadrants.

13. For the SPC 9x9-5 fuel assembly, each fuel rod must meet either the 9x9E or the 9x9F set of limits for clad O.D., clad I.D., and pellet diameter.

14. For those MPCs loaded with both INTACT FUEL ASSEMBLIES and DAMAGED FUEL ASSEMBLIES or FUEL DEBRIS, the maximum PLANAR AVERAGE INITIAL ENRICHMENT for the INTACT FUEL ASSEMBLIES is limited to 3.7 wt.% ^{235}U, as applicable.

Table 2.1-4

TABLE DELETED

~~FUEL ASSEMBLY COOLING AND MAXIMUM AVERAGE BURNUP (UNIFORM FUEL LOADING)~~

~~Post-Irradiation Cooling Time (years)~~	~~MPC-24 PWR Assembly Burnup (INTACT FUEL ASSEMBLIES) (MWD/MTU)~~	~~MPC-24E/24EF PWR Assembly Burnup (INTACT FUEL ASSEMBLIES) (MWD/MTU)~~	~~MPC-24E/24EF PWR Assembly Burnup (DAMAGED FUEL ASSEMBLIES AND FUEL DEBRIS) (MWD/MTU)~~	~~MPC-32 PWR Assembly Burnup (INTACT FUEL ASSEMBLIES (MWD/MTU)~~	~~MPC-68/68FF BWR Assembly Burnup (INTACT FUEL ASSEMBLIES) (MWD/MTU)~~	~~MPC-68/68FF BWR Assembly Burnup (DAMAGED FUEL ASSEMBLIES AND FUEL DEBRIS) (MWD/MTU)~~
~~≥5~~	~~40,600~~	~~41,100~~	~~39,200~~	~~32,200~~	~~38,300~~	~~36,700~~
~~≥6~~	~~45,000~~	~~45,000~~	~~43,700~~	~~36,500~~	~~41,600~~	~~39,900~~
~~≥7~~	~~45,900~~	~~46,300~~	~~44,500~~	~~37,500~~	~~42,300~~	~~40,700~~
~~≥8~~	~~48,300~~	~~48,900~~	~~46,900~~	~~39,900~~	~~44,800~~	~~42,900~~
~~≥9~~	~~50,300~~	~~50,700~~	~~48,700~~	~~41,500~~	~~46,600~~	~~44,700~~
~~≥10~~	~~51,600~~	~~52,100~~	~~50,100~~	~~42,900~~	~~48,000~~	~~46,100~~
~~≥11~~	~~53,100~~	~~53,700~~	~~51,500~~	~~44,100~~	~~49,600~~	~~47,200~~
~~≥12~~	~~54,500~~	~~55,100~~	~~52,600~~	~~45,000~~	~~50,800~~	~~48,500~~
~~≥13~~	~~55,600~~	~~56,100~~	~~53,800~~	~~45,700~~	~~51,800~~	~~49,800~~
~~≥14~~	~~56,500~~	~~57,100~~	~~54,900~~	~~46,500~~	~~52,700~~	~~50,700~~
~~≥15~~	~~57,400~~	~~58,000~~	~~55,800~~	~~47,200~~	~~53,900~~	~~51,500~~

~~Notes: 1. Linear interpolation between points is permitted.~~

~~2. Burnup for fuel assemblies with cladding made of materials other than Zircaloy-2 or Zircaloy-4 is limited to 45,000 MWD/MTU or the value in this table, whichever is less.~~

Table 2.1-5

TABLE DELETED

~~FUEL ASSEMBLY COOLING AND MAXIMUM DECAY HEAT (UNIFORM FUEL LOADING)~~

~~Post-Irradiation Cooling Time (years)~~	~~MPC-24 PWR Assembly Decay Heat (INTACT FUEL ASSEMBLIES) (Watts)~~	~~MPC-24E/24EF PWR Assembly Decay Heat (INTACT FUEL ASSEMBLIES) (Watts)~~	~~MPC-24E/24EF PWR Assembly Decay Heat (DAMAGED FUEL ASSEMBLIES AND FUEL DEBRIS) (Watts)~~	~~MPC-32 PWR Assembly Decay Heat (INTACT FUEL ASSEMBLIES (Watts)~~	~~MPC-68/68FF BWR Assembly Decay Heat (INTACT FUEL ASSEMBLIES) (Watts)~~	~~MPC-68/68FF BWR Assembly Decay Heat (DAMAGED FUEL ASSEMBLIES AND FUEL DEBRIS) (Watts)~~
~~≥5~~	~~1157~~	~~1173~~	~~1115~~	~~898~~	~~414~~	~~393~~
~~≥6~~	~~1123~~	~~1138~~	~~1081~~	~~873~~	~~394~~	~~374~~
~~≥7~~	~~1030~~	~~1043~~	~~994~~	~~805~~	~~363~~	~~345~~
~~≥8~~	~~1020~~	~~1033~~	~~981~~	~~800~~	~~360~~	~~342~~
~~≥9~~	~~1010~~	~~1023~~	~~972~~	~~794~~	~~358~~	~~340~~
~~≥10~~	~~1000~~	~~1012~~	~~962~~	~~789~~	~~355~~	~~337~~
~~≥11~~	~~996~~	~~1008~~	~~958~~	~~785~~	~~353~~	~~336~~
~~≥12~~	~~992~~	~~1004~~	~~954~~	~~782~~	~~352~~	~~334~~
~~≥13~~	~~987~~	~~999~~	~~949~~	~~773~~	~~350~~	~~332~~
~~≥14~~	~~983~~	~~995~~	~~945~~	~~769~~	~~348~~	~~331~~
~~≥15~~	~~979~~	~~991~~	~~941~~	~~766~~	~~347~~	~~329~~

~~Notes: 1. Linear interpolation between points is permitted.~~

~~2. Includes all sources of heat (i.e., fuel and NON-FUEL HARDWARE).~~

Table 2.1-6 (page 1 of 2)

TABLE DELETED

~~FUEL ASSEMBLY COOLING AND MAXIMUM AVERAGE BURNUP (REGIONALIZED FUEL LOADING)~~

~~Post-Irradiation Cooling Time (years)~~	~~MPC-24 PWR Assembly Burnup for Region 1 (MWD/MTU)~~	~~MPC-24 PWR Assembly Burnup for Region 2 (MWD/MTU)~~	~~MPC-24E/24EF PWR Assembly Burnup for Region 1 (MWD/MTU)~~	~~MPC-24E/24EF PWR Assembly Burnup for Region 2 (MWD/MTU)~~
~~≥5~~	~~49,800~~	~~32,200~~	~~51,600~~	~~32,200~~
~~≥6~~	~~56,100~~	~~37,400~~	~~58,400~~	~~37,400~~
~~≥7~~	~~56,400~~	~~41,100~~	~~58,500~~	~~41,100~~
~~≥8~~	~~58,800~~	~~43,800~~	~~60,900~~	~~43,800~~
~~≥9~~	~~60,400~~	~~45,800~~	~~62,300~~	~~45,800~~
~~≥10~~	~~61,200~~	~~47,500~~	~~63,300~~	~~47,500~~
~~≥11~~	~~62,400~~	~~49,000~~	~~64,900~~	~~49,000~~
~~≥12~~	~~63,700~~	~~50,400~~	~~65,900~~	~~50,400~~
~~≥13~~	~~64,800~~	~~51,500~~	~~66,800~~	~~51,500~~
~~≥14~~	~~65,500~~	~~52,500~~	~~67,500~~	~~52,500~~
~~≥15~~	~~66,200~~	~~53,700~~	~~68,200~~	~~53,700~~
~~≥16~~	~~-~~	~~55,000~~	~~-~~	~~55,000~~
~~≥17~~	~~-~~	~~55,900~~	~~-~~	~~55,900~~
~~≥18~~	~~-~~	~~56,800~~	~~-~~	~~56,800~~
~~≥19~~	~~-~~	~~57,800~~	~~-~~	~~57,800~~
~~≥20~~	~~-~~	~~58,800~~	~~-~~	~~58,800~~

~~Notes: 1. Linear interpolation between points is permitted.~~
~~2. These limits apply to INTACT FUEL ASSEMBLIES, DAMAGED FUEL ASSEMBLIES, and FUEL DEBRIS.~~
~~3. Burnup for fuel assemblies with cladding made of materials other than Zircaloy-2 or Zircaloy-4 is limited to 45,000 MWD/MTU or the value in this table, whichever is less.~~

Table 2.1-6 (page 2 of 2)

TABLE DELETED

~~FUEL ASSEMBLY COOLING AND MAXIMUM AVERAGE BURNUP (REGIONALIZED FUEL LOADING)~~

~~Post-Irradiation Cooling Time (years)~~	~~MPC-32 PWR Assembly Burnup for Region 1 (MWD/MTU)~~	~~MPC-32 PWR Assembly Burnup for Region 2 (MWD/MTU)~~	~~MPC-68/68FF BWR Assembly Burnup for Region 1 (MWD/MTU)~~	~~MPC-68/68FF BWR Assembly Burnup for Region 2 (MWD/MTU)~~
~~≥ 5~~	~~39,800~~	~~22,100~~	~~45,100~~	~~26,200~~
~~≥ 6~~	~~43,400~~	~~26,200~~	~~47,400~~	~~30,500~~
~~≥ 7~~	~~44,500~~	~~29,100~~	~~47,400~~	~~33,600~~
~~≥ 8~~	~~46,700~~	~~31,200~~	~~50,400~~	~~35,900~~
~~≥ 9~~	~~48,400~~	~~32,700~~	~~52,100~~	~~37,600~~
~~≥ 10~~	~~49,600~~	~~34,100~~	~~53,900~~	~~39,000~~
~~≥ 11~~	~~50,900~~	~~35,200~~	~~55,500~~	~~40,200~~
~~≥ 12~~	~~51,900~~	~~36,200~~	~~56,500~~	~~41,200~~
~~≥ 13~~	~~52,900~~	~~37,000~~	~~57,500~~	~~42,300~~
~~≥ 14~~	~~53,800~~	~~37,800~~	~~58,800~~	~~43,300~~
~~≥ 15~~	~~54,700~~	~~38,600~~	~~59,900~~	~~44,200~~
~~≥ 16~~	~~-~~	~~39,400~~	~~-~~	~~45,000~~
~~≥ 17~~	~~-~~	~~40,200~~	~~-~~	~~45,900~~
~~≥ 18~~	~~-~~	~~40,800~~	~~-~~	~~46,700~~
~~≥ 19~~	~~-~~	~~41,500~~	~~-~~	~~47,500~~
~~≥ 20~~	~~-~~	~~42,200~~	~~-~~	~~48,500~~

~~Notes: 1. Linear interpolation between points is permitted.~~
~~2. These limits apply to INTACT FUEL ASSEMBLIES, DAMAGED FUEL ASSEMBLIES, and FUEL DEBRIS.~~
~~3. Burnup for fuel assemblies with cladding made of materials other than Zircaloy-2 or Zircaloy-4 is limited to 45,000 MWD/MTU or the value in this table, whichever is less.~~

Table 2.1-7 (page 1 of 2)

TABLE DELETED

~~FUEL ASSEMBLY COOLING AND MAXIMUM DECAY HEAT (REGIONALIZED FUEL LOADING)~~

~~Post-Irradiation Cooling Time (years)~~	~~MPC-24 PWR Assembly Decay Heat for Region 1 (Watts)~~	~~MPC-24 PWR Assembly Decay Heat for Region 2 (Watts)~~	~~MPC-24E/24EF PWR Assembly Decay Heat for Region 1 (Watts)~~	~~MPC-24E/24EF PWR Assembly Decay Heat for Region 2 (Watts)~~
~~≥5~~	~~1470~~	~~900~~	~~1540~~	~~900~~
~~≥6~~	~~1470~~	~~900~~	~~1540~~	~~900~~
~~≥7~~	~~1335~~	~~900~~	~~1395~~	~~900~~
~~≥8~~	~~1,301~~	~~900~~	~~1360~~	~~900~~
~~≥9~~	~~1268~~	~~900~~	~~1325~~	~~900~~
~~≥10~~	~~1235~~	~~900~~	~~1290~~	~~900~~
~~≥11~~	~~1224~~	~~900~~	~~1275~~	~~900~~
~~≥12~~	~~1207~~	~~900~~	~~1260~~	~~900~~
~~≥13~~	~~1193~~	~~900~~	~~1245~~	~~900~~
~~≥14~~	~~1179~~	~~900~~	~~1230~~	~~900~~
~~≥15~~	~~1165~~	~~900~~	~~1215~~	~~900~~
~~≥16~~	~~-~~	~~900~~	~~-~~	~~900~~
~~≥17~~	~~-~~	~~900~~	~~-~~	~~900~~
~~≥18~~	~~-~~	~~900~~	~~-~~	~~900~~
~~≥19~~	~~-~~	~~900~~	~~-~~	~~900~~
~~≥20~~	~~-~~	~~900~~	~~-~~	~~900~~

~~Notes: 1. Linear interpolation between points is permitted.~~
~~2. Includes all sources of decay heat (i.e., fuel and NON-FUEL HARDWARE).~~
~~4. These limits apply to INTACT FUEL ASSEMBLIES, DAMAGED FUEL ASSEMBLIES, and FUEL DEBRIS.~~

Table 2.1-7 (page 2 of 2)

TABLE DELETED

~~FUEL ASSEMBLY COOLING AND MAXIMUM DECAY HEAT (REGIONALIZED FUEL LOADING)~~

~~Post-Irradiation Cooling Time (years)~~	~~MPC-32 PWR Assembly Decay Heat for Region 1 (Watts)~~	~~MPC-32 PWR Assembly Decay Heat for Region 2 (Watts)~~	~~MPC-68/68FF BWR Assembly Decay Heat for Region 1 (Watts)~~	~~MPC-68/68FF BWR Assembly Decay Heat for Region 2 (Watts)~~
~~≥ 5~~	~~1131~~	~~600~~	~~500~~	~~275~~
~~≥ 6~~	~~1072~~	~~600~~	~~468~~	~~275~~
~~≥ 7~~	~~993~~	~~600~~	~~418~~	~~275~~
~~≥ 8~~	~~978~~	~~600~~	~~414~~	~~275~~
~~≥ 9~~	~~964~~	~~600~~	~~410~~	~~275~~
~~≥ 10~~	~~950~~	~~600~~	~~405~~	~~275~~
~~≥ 11~~	~~943~~	~~600~~	~~403~~	~~275~~
~~≥ 12~~	~~937~~	~~600~~	~~400~~	~~275~~
~~≥ 13~~	~~931~~	~~600~~	~~397~~	~~275~~
~~≥ 14~~	~~924~~	~~600~~	~~394~~	~~275~~
~~≥ 15~~	~~918~~	~~600~~	~~391~~	~~275~~
~~≥ 16~~	~~-~~	~~600~~	~~-~~	~~275~~
~~≥ 17~~	~~-~~	~~600~~	~~-~~	~~275~~
~~≥ 18~~	~~-~~	~~600~~	~~-~~	~~275~~
~~≥ 19~~	~~-~~	~~600~~	~~-~~	~~275~~
~~≥ 20~~	~~-~~	~~600~~	~~-~~	~~275~~

~~Notes: 1. Linear interpolation between points is permitted.~~
~~2. Includes all sources of decay heat (i.e., fuel and NON-FUEL HARDWARE).~~
~~3. These limits apply to INTACT FUEL ASSEMBLIES, DAMAGED FUEL ASSEMBLIES, and FUEL DEBRIS.~~

Table 2.1-8
NON-FUEL HARDWARE COOLING AND AVERAGE BURNUP *(Notes 1, 2, and 3)*

Post-Irradiation Cooling Time (years)	~~NEUTRON POISON~~ INSERTS (Note ~~3~~*4*) BURNUP (MWD/MTU)	GUIDE TUBE HARDWARE (Note ~~4~~*5*) BURNUP (MWD/MTU)	CONTROL COMPONENT (Note ~~5~~*6*) BURNUP (MWD/MTU)	APSR BURNUP (MWD/MTU)
≥ 3	≤ ~~20,000~~ *24,635*	NA (Note ~~6~~*7*)	NA	NA
≥ 4	≤ ~~25,000~~ *30,000*	≤ 20,000	NA	NA
≥ 5	≤ ~~30,000~~ *36,748*	≤ 25,000	≤ 630,000	≤ 45,000
≥ 6	≤ ~~40,000~~ *44,102*	≤ 30,000	-	≤ 54,500
≥ 7	≤ ~~45,000~~ *52,900*	≤ 40,000	-	≤ 68,000
≥ 8	≤ ~~50,000~~ *60,000*	≤ 45,000	-	≤ 83,000
≥ 9	~~≤ 60,000~~	≤ 50,000	-	≤ 111,000
≥ 10	-	≤ 60,000	-	≤ 180,000
≥ 11	-	≤ 75,000	-	≤ 630,000
≥ 12	-	≤ 90,000	-	-
≥ 13	-	≤ 180,000	-	-
≥ 14	-	≤ 630,000	-	-

Notes:
1. *Burnups for NON-FUEL HARDWARE are to be determined based on the burnup and uranium mass of the fuel assemblies in which the component was inserted during reactor operation.*
2. Linear interpolation between points is permitted, except that TPD and APSR burnups > 180,000 MWD/MTU and ≤ 630,000 MWD/MTU must be cooled ≥ 14 years and ≥ 11 years, respectively.
3. Applicable to uniform loading and regionalized loading.
4. Includes Burnable Poison Rod Assemblies (BPRAs), ~~and~~ Wet Annular Burnable Absorbers (WABAs), *and vibration suppressor inserts.*
5. Includes Thimble Plug Devices (TPDs), water displacement guide tube plugs, and orifice rod assemblies.
6. Includes Control Rod Assemblies (CRAs), Control Element Assemblies (CEAs), and Rod Cluster Control Assemblies (RCCAs).
7. NA means not authorized for loading *at this cooling time.*

2.4 Decay Heat, Burnup, and Cooling Time Limits for ZR-Clad Fuel

This section provides the limits on ZR-clad fuel assembly decay heat, burnup, and cooling time for storage in the HI-STORM 100 System. A detailed discussion of how to calculate the limits and verify compliance, including examples, is provided in Chapter 12 of the HI-STORM 100 FSAR.

2.4.1 Uniform Fuel Loading Decay Heat Limits for ZR-clad fuel

Table 2.4-1 provides the maximum allowable decay heat per ZR-clad fuel assembly for uniform fuel loading for each MPC model.

Table 2.4-1

Maximum Allowable Decay Heat per Fuel Assembly (Uniform Loading, ZR-Clad)

MPC Model	Decay Heat per Fuel Assembly (kW)
MPC-24/24E/24EF	≤ 1.583
MPC-32/32F	≤ 1.1875
MPC-68/68FF	≤ 0.522

2.4.2 Regionalized Fuel Loading Decay Heat Limits for ZR-Clad Fuel

The allowable maximum decay heat per ZR-clad fuel assembly for regionalized fuel loading shall be calculated as follows. Fuel loading regions for each MPC model are shown in Figures 2.1-1 through 2.1-4. The number of fuel storage locations in each region and the maximum total decay heat per MPC model is provided in Table 2.4-2.

Table 2.4-2

MPC Fuel Storage Regions and Maximum Decay Heat

MPC Model	Number of Fuel Storage Locations in Region 1 ($N_{Region\ 1}$)	Number of Fuel Storage Locations in Region 2 ($N_{Region\ 2}$)	Maximum Decay Heat per MPC, Q (kW)
MPC-24/24E/24EF	4	20	38
MPC-32/32F	12	20	38
MPC-68/68FF	32	36	35.5

2.4.2 Regionalized Fuel Loading Decay Heat Limits for ZR-Clad Fuel (cont'd)

2.4.2.1 Choose a value of X between 1 and 6, where X is the ratio of the maximum decay heat per fuel assembly permitted in Region 1 ($q_{Region\ 1}$) to the maximum decay heat per fuel assembly permitted in Region 2 ($q_{Region\ 2}$).

2.4.2.2 Calculate $q_{Region\ 2}$ using the following equation:

$$q_{Region\ 2} = (2 \times Q)/[(1 + X^{0.15}) \times (N_{Region\ 1} \times X + N_{Region\ 2})] \qquad \text{Equation. 2.4.1}$$

Where:

$q_{Region\ 2}$ = Maximum allowable decay heat per fuel assembly in Region 2 (kW)

Q = Maximum allowable heat load for the MPC model from Table 2.4-2 (kW)

X = Ratio of $q_{Region\ 1}$ to $q_{Region\ 2}$ chosen in Step 2.4.2.1

$N_{Region\ 1}$ = Number of fuel storage locations in Region 1 from Table 2.4-2

$N_{Region\ 2}$ = Number of fuel storage locations in Region 2 from Table 2.4-2

2.4.2.3 Calculate $q_{Region\ 1}$ using the following equation:

$$q_{Region\ 1} = X \times q_{Region\ 2} \qquad \text{Equation 2.4.2}$$

Where:

$q_{Region\ 1}$ = Maximum allowable decay heat per fuel assembly in Region 1 (kW)

$q_{Region\ 2}$ = Maximum allowable decay heat per fuel assembly in Region 2 calculated in Step 2.4.2.2 (kW)

X = Ratio of $q_{Region\ 1}$ to $q_{Region\ 2}$ chosen in Step 2.4.2.1

2.4.3 Burnup Limits as a Function of Cooling Time for ZR-Clad Fuel

The maximum allowable fuel assembly average burnup varies with the following parameters:

- *Minimum fuel assembly cooling time*
- *Maximum fuel assembly decay heat*
- *Minimum fuel assembly average enrichment*

2.4.3 Burnup Limits as a Function of Cooling Time for ZR-Clad Fuel (cont'd)

The maximum allowable ZR-clad fuel assembly average burnup for a given MINIMUM ENRICHMENT is calculated as described below for minimum cooling times between 3 and 20 years using the maximum permissible decay heat determined in Section 2.4.1 or 2.4.2. Different fuel assembly average burnup limits may be calculated for different minimum enrichments (by individual fuel assembly) for use in choosing the fuel assemblies to be loaded into a given MPC.

2.4.3.1 Choose a fuel assembly minimum enrichment, E_{235}.

2.4.3.2 Calculate the maximum allowable fuel assembly average burnup for a minimum cooling time between 3 and 20 years using the equation below.

$$Bu = (A \times q) + (B \times q^2) + (C \times q^3) + [D \times (E_{235})^2] + (E \times q \times E_{235}) + (F \times q^2 \times E_{235}) + G$$

Equation 2.4.3

Where:

Bu = Maximum allowable average burnup per fuel assembly (MWD/MTU)

q = Maximum allowable decay heat per fuel assembly determined in Section 2.4.1 or 2.4.2 (kW)

E_{235} = Minimum fuel assembly average enrichment (wt. % ^{235}U) (e.g., for 4.05 wt.%, use 4.05)

A through G = Coefficients from Tables 2.4-3 and 2.4-4 for the applicable fuel assembly array/class and minimum cooling time

2.4.3.3 Calculated burnup limits shall be rounded down to the nearest integer.

2.4.3.4 Calculated burnup limits greater than 68,200 MWD/MTU for PWR fuel and 65,000 MWD/MTU for BWR must be reduced to be equal to these values.

2.4.3.5 Linear interpolation of calculated burnups between cooling times for a given fuel assembly maximum decay heat and minimum enrichment is permitted. For example, the allowable burnup for a cooling time of 4.5 years may be interpolated between those burnups calculated for 4 year and 5 years.

2.4.3 Burnup Limits as a Function of Cooling Time for ZR-Clad Fuel (cont'd)

2.4.3.6 Each ZR-clad fuel assembly to be stored must have a MINIMUM ENRICHMENT greater than or equal to the value used in Step 2.4.3.2.

2.4.3.7 When complying with the maximum fuel assembly decay heat limits, users must account for the decay heat from NON-FUEL HARDWARE, as applicable for the particular fuel storage location, to ensure the decay heat emitted by all contents in a storage location does not exceed the limit.

Table 2.4-3 (Page 1 of 8)

PWR Fuel Assembly Cooling Time-Dependent Coefficients
(ZR-Clad Fuel)

Cooling Time (years)	Array/Class 14x14A						
	A	B	C	D	E	F	G
≥ 3	20277.1	303.592	-68.329	-139.41	2993.67	-498.159	-615.411
≥ 4	35560.1	-6034.67	985.415	-132.734	3578.92	-723.721	-609.84
≥ 5	48917.9	-14499.5	2976.09	-150.707	4072.55	-892.691	-54.8362
≥ 6	59110.3	-22507	5255.61	-177.017	4517.03	-1024.01	613.36
≥ 7	67595.6	-30158.1	7746.6	-200.128	4898.71	-1123.21	716.004
≥ 8	74424.9	-36871.1	10169.4	-218.676	5203.64	-1190.24	741.163
≥ 9	81405.8	-44093.1	12910.8	-227.916	5405.34	-1223.27	250.224
≥ 10	86184.3	-49211.7	15063.4	-237.641	5607.96	-1266.21	134.435
≥ 11	92024.9	-55666.8	17779.6	-240.973	5732.25	-1282.12	-401.456
≥ 12	94775.8	-58559.7	19249.9	-246.369	5896.27	-1345.42	-295.435
≥ 13	100163	-64813.8	22045.1	-242.572	5861.86	-1261.66	-842.159
≥ 14	103971	-69171	24207	-242.651	5933.96	-1277.48	-1108.99
≥ 15	108919	-75171.1	27152.4	-243.154	6000.2	-1301.19	-1620.63
≥ 16	110622	-76715.2	28210.2	-240.235	6028.33	-1307.74	-1425.5
≥ 17	115582	-82929.7	31411.9	-235.234	5982.3	-1244.11	-1948.05
≥ 18	119195	-87323.5	33881.4	-233.28	6002.43	-1245.95	-2199.41
≥ 19	121882	-90270.6	35713.7	-231.873	6044.42	-1284.55	-2264.05
≥ 20	124649	-93573.5	37853.1	-230.22	6075.82	-1306.57	-2319.63

Table 2.4-3 (Page 2 of 8)

PWR Fuel Assembly Cooling Time-Dependent Coefficients
(ZR-Clad Fuel)

Cooling Time (years)	Array/Class 14x14B						
	A	B	C	D	E	F	G
≥ 3	18937.9	70.2997	-28.6224	-130.732	2572.36	-383.393	-858.17
≥ 4	32058.7	-4960.63	745.224	-125.978	3048.98	-551.656	-549.108
≥ 5	42626.3	-10804.1	1965.09	-139.722	3433.49	-676.643	321.88
≥ 6	51209.6	-16782.3	3490.45	-158.929	3751.01	-761.524	847.282
≥ 7	57829.9	-21982	5009.12	-180.026	4066.65	-846.272	1200.45
≥ 8	62758	-26055.3	6330.88	-196.804	4340.18	-928.336	1413.17
≥ 9	68161.4	-30827.6	7943.87	-204.454	4500.52	-966.347	1084.69
≥ 10	71996.8	-34224.3	9197.25	-210.433	4638.94	-1001.83	1016.38
≥ 11	75567.3	-37486.1	10466.9	-214.95	4759.55	-1040.85	848.169
≥ 12	79296.7	-40900.3	11799.6	-212.898	4794.13	-1040.51	576.242
≥ 13	82257.3	-43594	12935	-212.8	4845.81	-1056.01	410.807
≥ 14	83941.2	-44915.2	13641	-215.389	4953.19	-1121.71	552.724
≥ 15	87228.5	-48130	15056.9	-212.545	4951.12	-1112.5	260.194
≥ 16	90321.7	-50918.3	16285.5	-206.094	4923.36	-1106.35	-38.7487
≥ 17	92836.2	-53314.5	17481.7	-203.139	4924.61	-1109.32	-159.673
≥ 18	93872.8	-53721.4	17865.1	-202.573	4956.21	-1136.9	30.0594
≥ 19	96361.6	-56019.1	19075.9	-199.068	4954.59	-1156.07	-125.917
≥ 20	98647.5	-57795.1	19961.8	-191.502	4869.59	-1108.74	-217.603

Table 2.4-3 (Page 3 of 8)

PWR Fuel Assembly Cooling Time-Dependent Coefficients
(ZR-Clad Fuel)

Cooling Time (years)	Array/Class 14x14C						
	A	B	C	D	E	F	G
≥ 3	19176.9	192.012	-66.7595	-138.112	2666.73	-407.664	-1372.41
≥ 4	32040.3	-4731.4	651.014	-124.944	3012.63	-530.456	-890.059
≥ 5	43276.7	-11292.8	2009.76	-142.172	3313.91	-594.917	-200.195
≥ 6	51315.5	-16920.5	3414.76	-164.287	3610.77	-652.118	463.041
≥ 7	57594.7	-21897.6	4848.49	-189.606	3940.67	-729.367	781.46
≥ 8	63252.3	-26562.8	6273.01	-199.974	4088.41	-732.054	693.879
≥ 9	67657.5	-30350.9	7533.4	-211.77	4283.39	-772.916	588.456
≥ 10	71834.4	-34113.7	8857.32	-216.408	4383.45	-774.982	380.243
≥ 11	75464.1	-37382.1	10063	-218.813	4460.69	-776.665	160.668
≥ 12	77811.1	-39425.1	10934.3	-225.193	4604.68	-833.459	182.463
≥ 13	81438.3	-42785.4	12239.9	-220.943	4597.28	-803.32	-191.636
≥ 14	84222.1	-45291.6	13287.9	-218.366	4608.13	-791.655	-354.59
≥ 15	86700.1	-47582.6	14331.2	-218.206	4655.34	-807.366	-487.316
≥ 16	88104.7	-48601.1	14927.9	-219.498	4729.97	-849.446	-373.196
≥ 17	91103.3	-51332.5	16129	-212.138	4679.91	-822.896	-654.296
≥ 18	93850.4	-53915.8	17336.9	-207.666	4652.65	-799.697	-866.307
≥ 19	96192.9	-55955.8	18359.3	-203.462	4642.65	-800.315	-1007.75
≥ 20	97790.4	-57058.1	19027.7	-200.963	4635.88	-799.721	-951.122

Table 2.4-3 (Page 4 of 8)

PWR Fuel Assembly Cooling Time-Dependent Coefficients
(ZR-Clad Fuel)

Cooling Time (years)	Array/Class 15x15A/B/C						
	A	B	C	D	E	F	G
≥ 3	15789.2	119.829	-21.8071	-127.422	2152.53	-267.717	-580.768
≥ 4	26803.8	-3312.93	415.027	-116.279	2550.15	-386.33	-367.168
≥ 5	36403.6	-7831.93	1219.66	-126.065	2858.32	-471.785	326.863
≥ 6	44046.1	-12375.9	2213.52	-145.727	3153.45	-539.715	851.971
≥ 7	49753.5	-16172.6	3163.61	-166.946	3428.38	-603.598	1186.31
≥ 8	55095.4	-20182.5	4287.03	-183.047	3650.42	-652.92	1052.4
≥ 9	58974.4	-23071.6	5156.53	-191.718	3805.41	-687.18	1025
≥ 10	62591.8	-25800.8	5995.95	-195.105	3884.14	-690.659	868.556
≥ 11	65133.1	-27747.4	6689	-203.095	4036.91	-744.034	894.607
≥ 12	68448.4	-30456	7624.9	-202.201	4083.52	-753.391	577.914
≥ 13	71084.4	-32536.4	8381.78	-201.624	4117.93	-757.16	379.105
≥ 14	73459.5	-34352.3	9068.86	-197.988	4113.16	-747.015	266.536
≥ 15	75950.7	-36469.4	9920.52	-199.791	4184.91	-779.222	57.9429
≥ 16	76929.1	-36845.6	10171.3	-197.88	4206.24	-794.541	256.099
≥ 17	79730	-39134.8	11069.4	-190.865	4160.42	-773.448	-42.6853
≥ 18	81649.2	-40583	11736.1	-187.604	4163.36	-785.838	-113.614
≥ 19	83459	-41771.8	12265.9	-181.461	4107.51	-758.496	-193.442
≥ 20	86165.4	-44208.8	13361.2	-178.89	4107.62	-768.671	-479.778

Table 2.4-3 (Page 5 of 8)

PWR Fuel Assembly Cooling Time-Dependent Coefficients
(ZR-Clad Fuel)

Cooling Time (years)	Array/Class 15x15D/E/F/H						
	A	B	C	D	E	F	G
≥ 3	15192.5	50.5722	-12.3042	-126.906	2009.71	-235.879	-561.574
≥ 4	25782.5	-3096.5	369.096	-113.289	2357.75	-334.695	-254.964
≥ 5	35026.5	-7299.87	1091.93	-124.619	2664	-414.527	470.916
≥ 6	42234.9	-11438.4	1967.63	-145.948	2945.81	-474.981	1016.84
≥ 7	47818.4	-15047	2839.22	-167.273	3208.95	-531.296	1321.12
≥ 8	52730.7	-18387.2	3702.43	-175.057	3335.58	-543.232	1223.61
≥ 9	56254.6	-20999.9	4485.93	-190.489	3547.98	-600.64	1261.55
≥ 10	59874.6	-23706.5	5303.88	-193.807	3633.01	-611.892	1028.63
≥ 11	62811	-25848.4	5979.64	-194.997	3694.14	-618.968	862.738
≥ 12	65557.6	-27952.4	6686.74	-198.224	3767.28	-635.126	645.139
≥ 13	67379.4	-29239.2	7197.49	-200.164	3858.53	-677.958	652.601
≥ 14	69599.2	-30823.8	7768.51	-196.788	3868.2	-679.88	504.443
≥ 15	71806.7	-32425	8360.38	-191.935	3851.65	-669.917	321.146
≥ 16	73662.6	-33703.5	8870.78	-187.366	3831.59	-658.419	232.335
≥ 17	76219.8	-35898.1	9754.72	-189.111	3892.07	-694.244	-46.924
≥ 18	76594.4	-35518.2	9719.78	-185.11	3897.04	-712.82	236.047
≥ 19	78592.7	-36920.8	10316.5	-179.54	3865.84	-709.551	82.478
≥ 20	80770.5	-38599.9	11051.3	-175.106	3858.67	-723.211	-116.014

Table 2.4-3 (Page 6 of 8)

PWR Fuel Assembly Cooling Time-Dependent Coefficients
(ZR-Clad Fuel)

Cooling Time (years)	Array/Class 16X16A						
	A	B	C	D	E	F	G
≥ 3	17038.2	158.445	-37.6008	-136.707	2368.1	-321.58	-700.033
≥ 4	29166.3	-3919.95	508.439	-125.131	2782.53	-455.722	-344.199
≥ 5	40285	-9762.36	1629.72	-139.652	3111.83	-539.804	139.67
≥ 6	48335.7	-15002.6	2864.09	-164.702	3444.97	-614.756	851.706
≥ 7	55274.9	-20190	4258.03	-185.909	3728.11	-670.841	920.035
≥ 8	60646.6	-24402.4	5483.54	-199.014	3903.29	-682.26	944.913
≥ 9	64663.2	-27753.1	6588.21	-215.318	4145.34	-746.822	967.914
≥ 10	69306.9	-31739.1	7892.13	-218.898	4237.04	-746.815	589.277
≥ 11	72725.8	-34676.6	8942.26	-220.836	4312.93	-750.85	407.133
≥ 12	76573.8	-38238.7	10248.1	-224.934	4395.85	-757.914	23.7549
≥ 13	78569	-39794.3	10914.9	-224.584	4457	-776.876	69.428
≥ 14	81559.4	-42453.6	11969.6	-222.704	4485.28	-778.427	-203.031
≥ 15	84108.6	-44680.4	12897.8	-218.387	4460	-746.756	-329.078
≥ 16	86512.2	-46766.8	13822.8	-216.278	4487.79	-759.882	-479.729
≥ 17	87526.7	-47326.2	14221	-218.894	4567.68	-805.659	-273.692
≥ 18	90340.3	-49888.6	15349.8	-212.139	4506.29	-762.236	-513.316
≥ 19	93218.2	-52436.7	16482.4	-207.653	4504.12	-776.489	-837.1
≥ 20	95533.9	-54474.1	17484.2	-203.094	4476.21	-760.482	-955.662

Table 2.4-3 (Page 7 of 8)

PWR Fuel Assembly Cooling Time-Dependent Coefficients
(ZR-Clad Fuel)

Cooling Time (years)	Array/Class 17x17A						
	A	B	C	D	E	F	G
≥ 3	16784.4	3.90244	-10.476	-128.835	2256.98	-287.108	-263.081
≥ 4	28859	-3824.72	491.016	-120.108	2737.65	-432.361	-113.457
≥ 5	40315.9	-9724	1622.89	-140.459	3170.28	-547.749	425.136
≥ 6	49378.5	-15653.1	3029.25	-164.712	3532.55	-628.93	842.73
≥ 7	56759.5	-21320.4	4598.78	-190.58	3873.21	-698.143	975.46
≥ 8	63153.4	-26463.8	6102.47	-201.262	4021.84	-685.431	848.497
≥ 9	67874.9	-30519.2	7442.84	-218.184	4287.23	-754.597	723.305
≥ 10	72676.8	-34855.2	8928.27	-222.423	4382.07	-741.243	387.877
≥ 11	75623	-37457.1	9927.65	-232.962	4564.55	-792.051	388.402
≥ 12	80141.8	-41736.5	11509.8	-232.944	4624.72	-787.134	-164.727
≥ 13	83587.5	-45016.4	12800.9	-230.643	4623.2	-745.177	-428.635
≥ 14	86311.3	-47443.4	13815.2	-228.162	4638.89	-729.425	-561.758
≥ 15	87839.2	-48704.1	14500.3	-231.979	4747.67	-775.801	-441.959
≥ 16	91190.5	-51877.4	15813.2	-225.768	4692.45	-719.311	-756.537
≥ 17	94512	-55201.2	17306.1	-224.328	4740.86	-747.11	-1129.15
≥ 18	96959	-57459.9	18403.8	-220.038	4721.02	-726.928	-1272.47
≥ 19	99061.1	-59172.1	19253.1	-214.045	4663.37	-679.362	-1309.88
≥ 20	100305	-59997.5	19841.1	-216.112	4721.71	-705.463	-1148.45

Table 2.4-3 (Page 8 of 8)

PWR Fuel Assembly Cooling Time-Dependent Coefficients
(ZR-Clad Fuel)

Cooling Time (years)	Array/Class 17x17B/C						
	A	B	C	D	E	F	G
≥ 3	15526.8	18.0364	-9.36581	-128.415	2050.81	-243.915	-426.07
≥ 4	26595.4	-3345.47	409.264	-115.394	2429.48	-350.883	-243.477
≥ 5	36190.4	-7783.2	1186.37	-130.008	2769.53	-438.716	519.95
≥ 6	44159	-12517.5	2209.54	-150.234	3042.25	-489.858	924.151
≥ 7	50399.6	-16780.6	3277.26	-173.223	3336.58	-555.743	1129.66
≥ 8	55453.9	-20420	4259.68	-189.355	3531.65	-581.917	1105.62
≥ 9	59469.3	-23459.8	5176.62	-199.63	3709.99	-626.667	1028.74
≥ 10	63200.5	-26319.6	6047.8	-203.233	3783.02	-619.949	805.311
≥ 11	65636.3	-28258.3	6757.23	-214.247	3972.8	-688.56	843.457
≥ 12	68989.7	-30904.4	7626.53	-212.539	3995.62	-678.037	495.032
≥ 13	71616.6	-32962.2	8360.45	-210.386	4009.11	-666.542	317.009
≥ 14	73923.9	-34748	9037.75	-207.668	4020.13	-662.692	183.086
≥ 15	76131.8	-36422.3	9692.32	-203.428	4014.55	-655.981	47.5234
≥ 16	77376.5	-37224.7	10111.4	-207.581	4110.76	-703.37	161.128
≥ 17	80294.9	-39675.9	11065.9	-201.194	4079.24	-691.636	-173.782
≥ 18	82219.8	-41064.8	11672.1	-195.431	4043.83	-675.432	-286.059
≥ 19	84168.9	-42503.6	12309.4	-190.602	4008.19	-656.192	-372.411
≥ 20	86074.2	-43854.4	12935.9	-185.767	3985.57	-656.72	-475.953

Table 2.4-4 (Page 1 of 10)

BWR Fuel Assembly Cooling Time-Dependent Coefficients
(ZR-Clad Fuel)

Cooling Time (years)	Array/Class 7x7B						
	A	B	C	D	E	F	G
≥ 3	26409.1	28347.5	-16858	-147.076	5636.32	-1606.75	1177.88
≥ 4	61967.8	-6618.31	-4131.96	-113.949	6122.77	-2042.85	-96.7439
≥ 5	91601.1	-49298.3	17826.5	-132.045	6823.14	-2418.49	-185.189
≥ 6	111369	-80890.1	35713.8	-150.262	7288.51	-2471.1	86.6363
≥ 7	126904	-108669	53338.1	-167.764	7650.57	-2340.78	150.403
≥ 8	139181	-132294	69852.5	-187.317	8098.66	-2336.13	97.5285
≥ 9	150334	-154490	86148.1	-193.899	8232.84	-2040.37	-123.029
≥ 10	159897	-173614	100819	-194.156	8254.99	-1708.32	-373.605
≥ 11	166931	-186860	111502	-193.776	8251.55	-1393.91	-543.677
≥ 12	173691	-201687	125166	-202.578	8626.84	-1642.3	-650.814
≥ 13	180312	-215406	137518	-201.041	8642.19	-1469.45	-810.024
≥ 14	185927	-227005	148721	-197.938	8607.6	-1225.95	-892.876
≥ 15	191151	-236120	156781	-191.625	8451.86	-846.27	-1019.4
≥ 16	195761	-244598	165372	-187.043	8359.19	-572.561	-1068.19
≥ 17	200791	-256573	179816	-197.26	8914.28	-1393.37	-1218.63
≥ 18	206068	-266136	188841	-187.191	8569.56	-730.898	-1363.79
≥ 19	210187	-273609	197794	-182.151	8488.23	-584.727	-1335.59
≥ 20	213731	-278120	203074	-175.864	8395.63	-457.304	-1364.38

Table 2.4-4 (Page 2 of 10)

BWR Fuel Assembly Cooling Time-Dependent Coefficients
(ZR-Clad Fuel)

Cooling Time (years)	Array/Class 8x8B						
	A	B	C	D	E	F	G
≥ 3	28219.6	28963.7	-17616.2	-147.68	5887.41	-1730.96	1048.21
≥ 4	66061.8	-10742.4	-1961.82	-123.066	6565.54	-2356.05	-298.005
≥ 5	95790.7	-53401.7	19836.7	-134.584	7145.41	-2637.09	-298.858
≥ 6	117477	-90055.9	41383.9	-154.758	7613.43	-2612.69	-64.9921
≥ 7	134090	-120643	60983	-168.675	7809	-2183.3	-40.8885
≥ 8	148186	-149181	81418.7	-185.726	8190.07	-2040.31	-260.773
≥ 9	159082	-172081	99175.2	-197.185	8450.86	-1792.04	-381.705
≥ 10	168816	-191389	113810	-195.613	8359.87	-1244.22	-613.594
≥ 11	177221	-210599	131099	-208.3	8810	-1466.49	-819.773
≥ 12	183929	-224384	143405	-207.497	8841.33	-1227.71	-929.708
≥ 13	191093	-240384	158327	-204.95	8760.17	-811.708	-1154.76
≥ 14	196787	-252211	169664	-204.574	8810.95	-610.928	-1208.97
≥ 15	203345	-267656	186057	-208.962	9078.41	-828.954	-1383.76
≥ 16	207973	-276838	196071	-204.592	9024.17	-640.808	-1436.43
≥ 17	213891	-290411	211145	-202.169	9024.19	-482.1	-1595.28
≥ 18	217483	-294066	214600	-194.243	8859.35	-244.684	-1529.61
≥ 19	220504	-297897	219704	-190.161	8794.97	-10.9863	-1433.86
≥ 20	227821	-318395	245322	-194.682	9060.96	-350.308	-1741.16

Table 2.4-4 (Page 3 of 10)

BWR Fuel Assembly Cooling Time-Dependent Coefficients
(ZR-Clad Fuel)

Cooling Time (years)	Array/Class 8x8C/D/E						
	A	B	C	D	E	F	G
≥ 3	28592.7	28691.5	-17773.6	-149.418	5969.45	-1746.07	1063.62
≥ 4	66720.8	-12115.7	-1154	-128.444	6787.16	-2529.99	-302.155
≥ 5	96929.1	-55827.5	21140.3	-136.228	7259.19	-2685.06	-334.328
≥ 6	118190	-92000.2	42602.5	-162.204	7907.46	-2853.42	-47.5465
≥ 7	135120	-123437	62827.1	-172.397	8059.72	-2385.81	-75.0053
≥ 8	149162	-152986	84543.1	-195.458	8559.11	-2306.54	-183.595
≥ 9	161041	-177511	103020	-200.087	8632.84	-1864.4	-433.081
≥ 10	171754	-201468	122929	-209.799	8952.06	-1802.86	-755.742
≥ 11	179364	-217723	137000	-215.803	9142.37	-1664.82	-847.268
≥ 12	186090	-232150	150255	-216.033	9218.36	-1441.92	-975.817
≥ 13	193571	-249160	165997	-213.204	9146.99	-1011.13	-1119.47
≥ 14	200034	-263671	180359	-210.559	9107.54	-694.626	-1312.55
≥ 15	205581	-275904	193585	-216.242	9446.57	-1040.65	-1428.13
≥ 16	212015	-290101	207594	-210.036	9212.93	-428.321	-1590.7
≥ 17	216775	-299399	218278	-204.611	9187.86	-398.353	-1657.6
≥ 18	220653	-306719	227133	-202.498	9186.34	-181.672	-1611.86
≥ 19	224859	-314004	235956	-193.902	8990.14	145.151	-1604.71
≥ 20	228541	-320787	245449	-200.727	9310.87	-230.252	-1570.18

Table 2.4-4 (Page 4 of 10)

BWR Fuel Assembly Cooling Time-Dependent Coefficients
(ZR-Clad Fuel)

Cooling Time (years)	Array/Class 9x9A						
	A	B	C	D	E	F	G
≥ 3	30538.7	28463.2	-18105.5	-150.039	6226.92	-1876.69	1034.06
≥ 4	71040.1	-16692.2	1164.15	-128.241	7105.27	-2728.58	-414.09
≥ 5	100888	-60277.7	24150.1	-142.541	7896.11	-3272.86	-232.197
≥ 6	124846	-102954	50350.8	-161.849	8350.16	-3163.44	-91.1396
≥ 7	143516	-140615	76456.5	-185.538	8833.04	-2949.38	-104.802
≥ 8	158218	-171718	99788.2	-196.315	9048.88	-2529.26	-259.929
≥ 9	172226	-204312	126620	-214.214	9511.56	-2459.19	-624.954
≥ 10	182700	-227938	146736	-215.793	9555.41	-1959.92	-830.943
≥ 11	190734	-246174	163557	-218.071	9649.43	-1647.5	-935.021
≥ 12	199997	-269577	186406	-223.975	9884.92	-1534.34	-1235.27
≥ 13	207414	-287446	204723	-228.808	10131.7	-1614.49	-1358.61
≥ 14	215263	-306131	223440	-220.919	9928.27	-988.276	-1638.05
≥ 15	221920	-321612	239503	-217.949	9839.02	-554.709	-1784.04
≥ 16	226532	-331778	252234	-216.189	9893.43	-442.149	-1754.72
≥ 17	232959	-348593	272609	-219.907	10126.3	-663.84	-1915.3
≥ 18	240810	-369085	296809	-219.729	10294.6	-859.302	-2218.87
≥ 19	244637	-375057	304456	-210.997	10077.8	-425.446	-2127.83
≥ 20	248112	-379262	309391	-204.191	9863.67	100.27	-2059.39

Table 2.4-4 (Page 5 of 10)

BWR Fuel Assembly Cooling Time-Dependent Coefficients
(ZR-Clad Fuel)

Cooling Time (years)	Array/Class 9x9B						
	A	B	C	D	E	F	G
≥ 3	30613.2	28985.3	-18371	-151.117	6321.55	-1881.28	988.92
≥ 4	71346.6	-15922.9	631.132	-128.876	7232.47	-2810.64	-471.737
≥ 5	102131	-60654.1	23762.7	-140.748	7881.6	-3156.38	-417.979
≥ 6	127187	-105842	51525.2	-162.228	8307.4	-2913.08	-342.13
≥ 7	146853	-145834	79146.5	-185.192	8718.74	-2529.57	-484.885
≥ 8	162013	-178244	103205	-197.825	8896.39	-1921.58	-584.013
≥ 9	176764	-212856	131577	-215.41	9328.18	-1737.12	-1041.11
≥ 10	186900	-235819	151238	-218.98	9388.08	-1179.87	-1202.83
≥ 11	196178	-257688	171031	-220.323	9408.47	-638.53	-1385.16
≥ 12	205366	-280266	192775	-223.715	9592.12	-472.261	-1661.6
≥ 13	215012	-306103	218866	-231.821	9853.37	-361.449	-1985.56
≥ 14	222368	-324558	238655	-228.062	9834.57	3.47358	-2178.84
≥ 15	226705	-332738	247316	-224.659	9696.59	632.172	-2090.75
≥ 16	233846	-349835	265676	-221.533	9649.93	913.747	-2243.34
≥ 17	243979	-379622	300077	-222.351	9792.17	1011.04	-2753.36
≥ 18	247774	-386203	308873	-220.306	9791.37	1164.58	-2612.25
≥ 19	254041	-401906	327901	-213.96	9645.47	1664.94	-2786.2
≥ 20	256003	-402034	330566	-215.242	9850.42	1359.46	-2550.06

Table 2.4-4 (Page 6 of 10)

BWR Fuel Assembly Cooling Time-Dependent Coefficients
(ZR-Clad Fuel)

Cooling Time (years)	Array/Class 9x9C/D						
	A	B	C	D	E	F	G
≥ 3	30051.6	29548.7	-18614.2	-148.276	6148.44	-1810.34	1006
≥ 4	70472.7	-14696.6	-233.567	-127.728	7008.69	-2634.22	-444.373
≥ 5	101298	-59638.9	23065.2	-138.523	7627.57	-2958.03	-377.965
≥ 6	125546	-102740	49217.4	-160.811	8096.34	-2798.88	-259.767
≥ 7	143887	-139261	74100.4	-184.302	8550.86	-2517.19	-275.151
≥ 8	159633	-172741	98641.4	-194.351	8636.89	-1838.81	-486.731
≥ 9	173517	-204709	124803	-212.604	9151.98	-1853.27	-887.137
≥ 10	182895	-225481	142362	-218.251	9262.59	-1408.25	-978.356
≥ 11	192530	-247839	162173	-217.381	9213.58	-818.676	-1222.12
≥ 12	201127	-268201	181030	-215.552	9147.44	-232.221	-1481.55
≥ 13	209538	-289761	203291	-225.092	9588.12	-574.227	-1749.35
≥ 14	216798	-306958	220468	-222.578	9518.22	-69.9307	-1919.71
≥ 15	223515	-323254	237933	-217.398	9366.52	475.506	-2012.93
≥ 16	228796	-334529	250541	-215.004	9369.33	662.325	-2122.75
≥ 17	237256	-356311	273419	-206.483	9029.55	1551.3	-2367.96
≥ 18	242778	-369493	290354	-215.557	9600.71	659.297	-2589.32
≥ 19	246704	-377971	302630	-210.768	9509.41	1025.34	-2476.06
≥ 20	249944	-382059	308281	-205.495	9362.63	1389.71	-2350.49

Table 2.4-4 (Page 7 of 10)

BWR Fuel Assembly Cooling Time-Dependent Coefficients
(ZR-Clad Fuel)

Cooling Time (years)	Array/Class 9x9E/F						
	A	B	C	D	E	F	G
≥ 3	30284.3	26949.5	-16926.4	-147.914	6017.02	-1854.81	1026.15
≥ 4	69727.4	-17117.2	1982.33	-127.983	6874.68	-2673.01	-359.962
≥ 5	98438.9	-58492	23382.2	-138.712	7513.55	-3038.23	-112.641
≥ 6	119765	-95024.1	45261	-159.669	8074.25	-3129.49	221.182
≥ 7	136740	-128219	67940.1	-182.439	8595.68	-3098.17	315.544
≥ 8	150745	-156607	88691.5	-193.941	8908.73	-2947.64	142.072
≥ 9	162915	-182667	109134	-198.37	8999.11	-2531	-93.4908
≥ 10	174000	-208668	131543	-210.777	9365.52	-2511.74	-445.876
≥ 11	181524	-224252	145280	-212.407	9489.67	-2387.49	-544.123
≥ 12	188946	-240952	160787	-210.65	9478.1	-2029.94	-652.339
≥ 13	193762	-250900	171363	-215.798	9742.31	-2179.24	-608.636
≥ 14	203288	-275191	196115	-218.113	9992.5	-2437.71	-1065.92
≥ 15	208108	-284395	205221	-213.956	9857.25	-1970.65	-1082.94
≥ 16	215093	-301828	224757	-209.736	9789.58	-1718.37	-1303.35
≥ 17	220056	-310906	234180	-201.494	9541.73	-1230.42	-1284.15
≥ 18	224545	-320969	247724	-206.807	9892.97	-1790.61	-1381.9
≥ 19	226901	-322168	250395	-204.073	9902.14	-1748.78	-1253.22
≥ 20	235561	-345414	276856	-198.306	9720.78	-1284.14	-1569.18

Table 2.4-4 (Page 8 of 10)

BWR Fuel Assembly Cooling Time-Dependent Coefficients
(ZR-Clad Fuel)

Cooling Time (years)	Array/Class 9x9G						
	A	B	C	D	E	F	G
≥ 3	35158.5	26918.5	-17976.7	-149.915	6787.19	-2154.29	836.894
≥ 4	77137.2	-19760.1	2371.28	-130.934	8015.43	-3512.38	-455.424
≥ 5	113405	-77931.2	35511.2	-150.637	8932.55	-4099.48	-629.806
≥ 6	139938	-128700	68698.3	-173.799	9451.22	-3847.83	-455.905
≥ 7	164267	-183309	109526	-193.952	9737.91	-3046.84	-737.992
≥ 8	182646	-227630	146275	-210.936	10092.3	-2489.3	-1066.96
≥ 9	199309	-270496	184230	-218.617	10124.3	-1453.81	-1381.41
≥ 10	213186	-308612	221699	-235.828	10703.2	-1483.31	-1821.73
≥ 11	225587	-342892	256242	-236.112	10658.5	-612.076	-2134.65
≥ 12	235725	-370471	285195	-234.378	10604.9	118.591	-2417.89
≥ 13	247043	-404028	323049	-245.79	11158.2	-281.813	-2869.82
≥ 14	253649	-421134	342682	-243.142	11082.3	400.019	-2903.88
≥ 15	262750	-448593	376340	-245.435	11241.2	581.355	-3125.07
≥ 16	270816	-470846	402249	-236.294	10845.4	1791.46	-3293.07
≥ 17	279840	-500272	441964	-241.324	11222.6	1455.84	-3528.25
≥ 18	284533	-511287	458538	-240.905	11367.2	1459.68	-3520.94
≥ 19	295787	-545885	501824	-235.685	11188.2	2082.21	-3954.2
≥ 20	300209	-556936	519174	-229.539	10956	2942.09	-3872.87

Table 2.4-4 (Page 9 of 10)

BWR Fuel Assembly Cooling Time-Dependent Coefficients
(ZR-Clad Fuel)

Cooling Time (years)	Array/Class 10x10A/B						
	A	B	C	D	E	F	G
≥ 3	29285.4	27562.2	-16985	-148.415	5960.56	-1810.79	1001.45
≥ 4	67844.9	-14383	395.619	-127.723	6754.56	-2547.96	-369.267
≥ 5	96660.5	-55383.8	21180.4	-137.17	7296.6	-2793.58	-192.85
≥ 6	118098	-91995	42958	-162.985	7931.44	-2940.84	60.9197
≥ 7	135115	-123721	63588.9	-171.747	8060.23	-2485.59	73.6219
≥ 8	148721	-151690	84143.9	-190.26	8515.81	-2444.25	-63.4649
≥ 9	160770	-177397	104069	-197.534	8673.6	-2101.25	-331.046
≥ 10	170331	-198419	121817	-213.692	9178.33	-2351.54	-472.844
≥ 11	179130	-217799	138652	-209.75	9095.43	-1842.88	-705.254
≥ 12	186070	-232389	151792	-208.946	9104.52	-1565.11	-822.73
≥ 13	192407	-246005	164928	-209.696	9234.7	-1541.54	-979.245
≥ 14	200493	-265596	183851	-207.639	9159.83	-1095.72	-1240.61
≥ 15	205594	-276161	195760	-213.491	9564.23	-1672.22	-1333.64
≥ 16	209386	-282942	204110	-209.322	9515.83	-1506.86	-1286.82
≥ 17	214972	-295149	217095	-202.445	9292.34	-893.6	-1364.97
≥ 18	219312	-302748	225826	-198.667	9272.27	-878.536	-1379.58
≥ 19	223481	-310663	235908	-194.825	9252.9	-785.066	-1379.62
≥ 20	227628	-319115	247597	-199.194	9509.02	-1135.23	-1386.19

Table 2.4-4 (Page 10 of 10)

BWR Fuel Assembly Cooling Time-Dependent Coefficients
(ZR-Clad Fuel)

Cooling Time (years)	Array/Class 10x10C						
	A	B	C	D	E	F	G
≥ 3	31425.3	27358.9	-17413.3	-152.096	6367.53	-1967.91	925.763
≥ 4	71804	-16964.1	1000.4	-129.299	7227.18	-2806.44	-416.92
≥ 5	102685	-62383.3	24971.2	-142.316	7961	-3290.98	-354.784
≥ 6	126962	-105802	51444.6	-164.283	8421.44	-3104.21	-186.615
≥ 7	146284	-145608	79275.5	-188.967	8927.23	-2859.08	-251.163
≥ 8	162748	-181259	105859	-199.122	9052.91	-2206.31	-554.124
≥ 9	176612	-214183	133261	-217.56	9492.17	-1999.28	-860.669
≥ 10	187756	-239944	155315	-219.56	9532.45	-1470.9	-1113.42
≥ 11	196580	-260941	174536	-222.457	9591.64	-944.473	-1225.79
≥ 12	208017	-291492	204805	-233.488	10058.3	-1217.01	-1749.84
≥ 13	214920	-307772	221158	-234.747	10137.1	-897.23	-1868.04
≥ 14	222562	-326471	240234	-228.569	9929.34	-183.47	-2016.12
≥ 15	228844	-342382	258347	-226.944	9936.76	117.061	-2106.05
≥ 16	233907	-353008	270390	-223.179	9910.72	360.39	-2105.23
≥ 17	244153	-383017	304819	-227.266	10103.2	380.393	-2633.23
≥ 18	249240	-395456	321452	-226.989	10284.1	169.947	-2623.67
≥ 19	254343	-406555	335240	-220.569	10070.5	764.689	-2640.2
≥ 20	260202	-421069	354249	-216.255	10069.9	854.497	-2732.77

3.0 DESIGN FEATURES

3.1 Site

3.1.1 Site Location

The HI-STORM 100 Cask System is authorized for general use by 10 CFR Part 50 license holders at various site locations under the provisions of 10 CFR 72, Subpart K.

3.2 Design Features Important for Criticality Control

3.2.1 MPC-24

1. Flux trap size: ≥ 1.09 in.
2. ^{10}B loading in the ~~Boral~~ neutron absorbers: ≥ 0.0267 g/cm^2 *(Boral) or ≥ 0.0223 g/cm^2 (METAMIC)*

3.2.2 MPC-68 and MPC-68FF

1. Fuel cell pitch: ≥ 6.43 in.
2. ^{10}B loading in the ~~Boral~~ neutron absorbers: ≥ 0.0372 g/cm^2 *(Boral) or ≥ 0.0310 g/cm^2 (METAMIC)*

3.2.3 MPC-68F

1. Fuel cell pitch: ≥ 6.43 in.
2. ^{10}B loading in the Boral neutron absorbers: ≥ 0.01 g/cm^2

3.2.4 MPC-24E and MPC-24EF

1. Flux trap size:
   i. Cells 3, 6, 19, and 22: ≥ 0.776 inch
   ii. All Other Cells: ≥ 1.076 inches
2. ^{10}B loading in the ~~Boral~~ neutron absorbers: ≥ 0.0372 g/cm^2 *(Boral) or ≥ 0.0310 g/cm^2 (METAMIC)*

3.2.5 MPC-32 *and MPC-32F*

1. Fuel cell pitch: ≥ 9.158 inches
2. ^{10}B loading in the ~~Boral~~ neutron absorbers: ≥ 0.0372 g/cm^2 *(Boral) or ≥ 0.0310 g/cm^2 (METAMIC)*

DESIGN FEATURES

3.2 Design Features Important for Criticality Control (con't)

3.2.6 ~~Fuel spacers shall be sized~~ *The fuel assemblies shall be positioned in the MPC* to ensure that the active fuel region of intact fuel assemblies remains within the ~~Boral~~ neutron poison region of the MPC basket with water in the MPC.

3.2.7 The B_4C content in METAMIC shall be $\leq$ 32.5 wt.%.

3.3 Codes and Standards

The American Society of Mechanical Engineers Boiler and Pressure Vessel Code (ASME Code), 1995 Edition with Addenda through 1997, is the governing Code for the HI-STORM 100 System, as clarified in Specification 3.3.1 below, *except for Code Sections V and IX. The latest effective editions of ASME Code Sections V and IX, including addenda, may be used for activities governed by those sections provided a written reconciliation of the later edition against the 1995 Edition, including addenda, is performed by the certificate holder.* American Concrete Institute (ACI) 349-85 is the governing Code for plain concrete as clarified in Appendix 1.D of the Final Safety Analysis Report for the HI-STORM 100 Cask System.

3.3.1 ~~Exceptions~~*Alternatives* to Codes, Standards, and Criteria

Table 3-1 lists approved ~~exceptions~~*alternatives* to the ASME Code for the design of the HI-STORM 100 Cask System.

3.3.2 Construction/Fabrication ~~Exceptions~~*Alternatives* to Codes, Standards, and Criteria

Proposed alternatives to the ASME Code, Section III, 1995 Edition with Addenda through 1997 including exceptions allowed by Specification 3.3.1 may be used *on a case-specific basis* when authorized by the Director of the Office of Nuclear Material Safety and Safeguards or designee. The request for such alternative should demonstrate that:

1. The proposed alternatives would provide an acceptable level of quality and safety, or

2. Compliance with the specified requirements of the ASME Code, Section III, 1995 Edition with Addenda through 1997, would result in hardship or unusual difficulty without a compensating increase in the level of quality and safety.

Requests for ~~exceptions~~*alternatives* shall be submitted in accordance with 10 CFR 72.4

(continued)

DESIGN FEATURES

Table 3-1 (page 1 of 59)
LIST OF ASME CODE ~~EXCEPTIONS~~*ALTERNATIVES* FOR HI-STORM 100 CASK SYSTEM

Component	Reference ASME Code Section/Article	Code Requirement	~~Exception~~*Alternative*, Justification & Compensatory Measures
MPC, MPC basket assembly, HI-STORM OVERPACK steel structure, and HI-TRAC TRANSFER CASK steel structure	*Subsection NCA*	*General Requirements. Requires preparation of a Design Specification, Design Report, Overpressure Protection Report, Certification of Construction Report, Data Report, and other administrative controls for an ASME Code stamped vessel.*	*Because the MPC, OVERPACK, and TRANSFER CASK are not ASME Code stamped vessels, none of the specifications, reports, certificates, or other general requirements specified by NCA are required. In lieu of a Design Specification and Design Report, the HI-STORM FSAR includes the design criteria, service conditions, and load combinations for the design and operation of the HI-STORM 100 System as well as the results of the stress analyses to demonstrate that applicable Code stress limits are met. Additionally, the fabricator is not required to have an ASME-certified QA program. All important-to-safety activities are governed by the NRC-approved Holtec QA program.* *Because the cask components are not certified to the Code, the terms "Certificate Holder" and "Inspector" are not germane to the manufacturing of NRC-certified cask components. To eliminate ambiguity, the responsibilities assigned to the Certificate Holder in the various articles of Subsections NB, NG, and NF of the Code, as applicable, shall be interpreted to apply to the NRC Certificate of Compliance (CoC) holder (and by extension, to the component fabricator) if the requirement must be fulfilled. The Code term "Inspector" means the QA/QC personnel of the CoC holder and its vendors assigned to oversee and inspect the manufacturing process.*
MPC	NB-1100	Statement of requirements for Code stamping of components.	MPC enclosure vessel is designed and will be fabricated in accordance with ASME Code, Section III, Subsection NB to the maximum practical extent, but Code stamping is not required.

Table 3-1 (page 2 of 59)
LIST OF ASME CODE ~~EXCEPTIONS~~*ALTERNATIVES* FOR HI-STORM 100 CASK SYSTEM

Component	Reference ASME Code Section/Article	Code Requirement	~~Exception~~*Alternative*, Justification & Compensatory Measures
MPC basket supports and lift lugs	*NB-1130*	*NB-1132.2(d) requires that the first connecting weld of a nonpressure-retaining structural attachment to a component shall be considered part of the component unless the weld is more than 2t from the pressure-retaining portion of the component, where t is the nominal thickness of the pressure-retaining material.* *NB-1132.2(e) requires that the first connecting weld of a welded nonstructural attachment to a component shall conform to NB-4430 if the connecting weld is within 2t from the pressure-retaining portion of the component.*	*The MPC basket supports (nonpressure-retaining structural attachments)and lift lugs (nonstructural attachments (relative to the function of lifting a loaded MPC) that are used exclusively for lifting an empty MPC) are welded to the inside of the pressure-retaining MPC shell, but are not designed in accordance with Subsection NB. The basket supports and associated attachment welds are designed to satisfy the stress limits of Subsection NG and the lift lugs and associated attachment welds are designed to satisfy the stress limits of Subsection NF, as a minimum. These attachments and their welds are shown by analysis to meet the respective stress limits for their service conditions. Likewise, non-structural items, such as shield plugs, spacers, etc. if used, can be attached to pressure-retaining parts in the same manner.*

Table 3-1 (page 3 of 59)
LIST OF ASME CODE ~~EXCEPTIONS~~*ALTERNATIVES* FOR HI-STORM 100 CASK SYSTEM

Component	Reference ASME Code Section/Article	Code Requirement	~~Exception~~*Alternative*, Justification & Compensatory Measures
MPC	NB-2000	Requires materials to be supplied by ASME-approved material supplier.	Materials will be supplied by Holtec-approved suppliers with Certified Material Test Reports (CMTRs) in accordance with NB-2000 requirements.
MPC, MPC basket assembly, HI-STORM OVERPACK and HI-TRAC TRANSFER CASK	*NB-3100 NG-3100 NF-3100*	*Provides requirements for determining design loading conditions, such as pressure, temperature, and mechanical loads.*	*These requirements are not applicable. The HI-STORM FSAR, serving as the Design Specification, establishes the service conditions and load combinations for the storage system.*
MPC	*NB-3350*	*NB-3352.3 requires, for Category C joints, that the minimum dimensions of the welds and throat thickness shall be as shown in Figure NB-4243-1.*	*Due to MPC basket-to-shell interface requirements, the MPC shell-to-baseplate weld joint design (designated Category C) does not include a reinforcing fillet weld or a bevel in the MPC baseplate, which makes it different than any of the representative configurations depicted in Figure NB-4243-1. The transverse thickness of this weld is equal to the thickness of the adjoining shell (1/2 inch). The weld is designed as a full penetration weld that receives VT and RT or UT, as well as final surface PT examinations. Because the MPC shell design thickness is considerably larger than the minimum thickness required by the Code, a reinforcing fillet weld that would intrude into the MPC cavity space is not included. Not including this fillet weld provides for a higher quality radiographic examination of the full penetration weld.* *From the standpoint of stress analysis, the fillet weld serves to reduce the local bending stress (secondary stress) produced by the gross structural discontinuity defined by the flat plate/shell junction. In the MPC design, the shell and baseplate thicknesses are well beyond that required to meet their respective membrane stress intensity limits.*

Table 3-1 (page 4 of 59)
LIST OF ASME CODE ~~EXCEPTIONS~~*ALTERNATIVES* FOR HI-STORM 100 CASK SYSTEM

Component	Reference ASME Code Section/Article	Code Requirement	~~Exception~~*Alternative*, Justification & Compensatory Measures
MPC, MPC Basket Assembly, HI-STORM OVERPACK steel structure, and HI-TRAC TRANSFER CASK steel structure	*NB-4120 NG-4120 NF-4120*	*NB-4121.2, NG-4121.2, and NF-4121.2 provide requirements for repetition of tensile or impact tests for material subjected to heat treatment during fabrication or installation.*	*In-shop operations of short duration that apply heat to a component, such as plasma cutting of plate stock, welding, machining, coating, and pouring of lead are not, unless explicitly stated by the Code, defined as heat treatment operations.* *For the steel parts in the HI-STORM 100 System components, the duration for which a part exceeds the off-normal temperature limit defined in Chapter 2 of the FSAR shall be limited to 24 hours in a particular manufacturing process (such as the HI-TRAC lead pouring process).*
MPC, MPC basket assembly, HI-STORM OVERPACK steel structure, and HI-TRAC TRANSFER CASK steel structure	*NB-4220 NF-4220*	*Requires certain forming tolerances to be met for cylindrical, conical, or spherical shells of a vessel.*	*The cylindricity measurements on the rolled shells are not specifically recorded in the shop travelers, as would be the case for a Code-stamped pressure vessel. Rather, the requirements on inter-component clearances (such as the MPC-to-TRANSFER CASK) are guaranteed through fixture-controlled manufacturing. The fabrication specification and shop procedures ensure that all dimensional design objectives, including inter-component annular clearances are satisfied. The dimensions required to be met in fabrication are chosen to meet the functional requirements of the dry storage components. Thus, although the post-forming Code cylindricity requirements are not evaluated for compliance directly, they are indirectly satisfied (actually exceeded) in the final manufactured components.*
MPC Lid and Closure Ring Welds	NB-4243	Full penetration welds required for Category C Joints (flat head to main shell per NB-3352.3).	MPC lid and closure ring are not full penetration welds. They are welded independently to provide a redundant seal. Additionally, a weld efficiency factor of 0.45 has been applied to the analyses of these welds.

Table 3-1 (page 5 of 59)
LIST OF ASME CODE ~~EXCEPTIONS~~*ALTERNATIVES* FOR HI-STORM 100 CASK SYSTEM

Component	Reference ASME Code Section/Article	Code Requirement	~~Exception~~*Alternative*, Justification & Compensatory Measures
MPC Lid to Shell Weld	NB-5230	Radiographic (RT) or ultrasonic (UT) examination required	Only UT or multi-layer liquid penetrant (PT) examination is permitted. If PT alone is used, at a minimum, it will include the root and final weld layers and each approximately 3/8 inch of weld depth.
MPC Closure Ring, Vent and Drain Cover Plate Welds	NB-5230	Radiographic (RT) or ultrasonic (UT) examination required	Root (if more than one weld pass is required) and final liquid penetrant examination to be performed in accordance with NB-5245. ~~The MPC vent and drain cover plate welds are leak tested.~~ The closure ring provides independent redundant closure for vent and drain cover plates.
MPC Enclosure Vessel and Lid	NB-6111	All completed pressure retaining systems shall be pressure tested.	The MPC enclosure vessel is seal welded in the field following fuel assembly loading. The MPC enclosure vessel shall then be ~~hydrostatically~~*pressure* tested as defined in Chapter 9. Accessibility for leakage inspections preclude a Code compliant ~~hydrostatic~~*pressure* test. All MPC enclosure vessel welds (except closure ring and vent/drain cover plate) are inspected by volumetric examination, except the MPC lid-to-shell weld shall be verified by volumetric or multi-layer PT examination. If PT alone is used, at a minimum, it must include the root and final layers and each approximately 3/8 inch of weld depth. For either UT or PT, the maximum undetectable flaw size must be demonstrated to be less than the critical flaw size. The critical flaw size must be determined in accordance with ASME Section XI methods. The critical flaw size shall not cause the primary stress limits of NB-3000 to be exceeded. The inspection ~~process~~ *results*, including *relevant* findings (indications), shall be made a permanent part of the user's records by video, photographic, or other means which provide an equivalent retrievable record of weld integrity. The video or photographic records should be taken during the final interpretation period described in ASME Section V, Article 6, T-676. The vent/drain cover plate ~~weld is confirmed by leakage testing and liquid penetrant examination~~ and the closure ring welds ~~is~~ *are* confirmed by liquid penetrant examination. The inspection of the weld must be performed by qualified personnel and shall meet the acceptance requirements of ASME Code Section III, NB-5350 for PT or NB-5332 for UT.

Table 3-1 (page 6 of 59)
LIST OF ASME CODE ~~EXCEPTIONS~~*ALTERNATIVES* FOR HI-STORM 100 CASK SYSTEM

Component	Reference ASME Code Section/Article	Code Requirement	~~Exception~~*Alternative*, Justification & Compensatory Measures
MPC Enclosure Vessel	NB-7000	Vessels are required to have overpressure protection	No overpressure protection is provided. The function of the MPC enclosure vessel is to contain the radioactive contents under normal, off-normal, and accident conditions. The MPC vessel is designed to withstand maximum internal pressure considering 100% fuel rod failure and maximum accident temperatures.
MPC Enclosure Vessel	NB-8000	States requirements for nameplates, stamping and reports per NCA-8000.	The HI-STORM100 System is to be marked and identified in accordance with 10CFR71 and 10CFR72 requirements. Code stamping is not required. QA data package to be in accordance with Holtec approved QA program.
MPC Basket Assembly	NG-2000	Requires materials to be supplied by ASME-approved material supplier.	Materials will be supplied by Holtec-approved supplier with CMTRs in accordance with NG-2000 requirements.

Table 3-1 (page 7 of 59) LIST OF ASME CODE ~~EXCEPTIONS~~ALTERNATIVES FOR HI-STORM 100 CASK SYSTEM			
Component	**Reference ASME Code Section/Article**	**Code Requirement**	**~~Exception~~Alternative, Justification & Compensatory Measures**
MPC basket assembly	*NG-4420*	*NG-4427(a) allows a fillet weld in any single continuous weld to be less than the specified fillet weld dimension by not more than 1/16 inch, provided that the total undersize portion of the weld does not exceed 10 percent of the length of the weld. Individual undersize weld portions shall not exceed 2 inches in length.*	*Modify the Code requirement (intended for core support structures) with the following text prepared to accord with the geometry and stress analysis imperatives for the fuel basket: For the longitudinal MPC basket fillet welds, the following criteria apply: 1) The specified fillet weld throat dimension must be maintained over at least 92 percent of the total weld length. All regions of undersized weld must be less than 3 inches long and separated from each other by at least 9 inches. 2) Areas of undercuts and porosity beyond that allowed by the applicable ASME Code shall not exceed 1/2 inch in weld length. The total length of undercut and porosity over any 1-foot length shall not exceed 2 inches. 3) The total weld length in which items (1) and (2) apply shall not exceed a total of 10 percent of the overall weld length. The limited access of the MPC basket panel longitudinal fillet welds makes it difficult to perform effective repairs of these welds and creates the potential for causing additional damage to the basket assembly (e.g., to the neutron absorber and its sheathing) if repairs are attempted. The acceptance criteria provided in the foregoing have been established to comport with the objectives of the basket design and preserve the margins demonstrated in the supporting stress analysis. From the structural standpoint, the weld acceptance criteria are established to ensure that any departure from the ideal, continuous fillet weld seam would not alter the primary bending stresses on which the design of the fuel baskets is predicated. Stated differently, the permitted weld discontinuities are limited in size to ensure that they remain classifiable as local stress elevators ("peak stress", F, in the ASME Code for which specific stress intensity limits do not apply).*
MPC Basket Assembly	NG-8000	States requirements for nameplates, stamping and reports per NCA-8000.	The HI-STORM100 System is to be marked and identified in accordance with 10CFR71 and 10CFR72 requirements. Code stamping is not required. The MPC basket data package to be in accordance with Holtec approved QA program.
OVERPACK Steel Structure	NF-2000	Requires materials to be supplied by ASME-approved material supplier.	Materials will be supplied by Holtec-approved supplier with CMTRs in accordance with NF-2000 requirements.

Table 3-1 (page 8 of 59) LIST OF ASME CODE ~~EXCEPTIONS~~*ALTERNATIVES* FOR HI-STORM 100 CASK SYSTEM			
Component	**Reference ASME Code Section/Article**	**Code Requirement**	**~~Exception~~*Alternative*, Justification & Compensatory Measures**
TRANSFER CASK Steel Structure	NF-2000	Requires materials to be supplied by ASME-approved material supplier.	Materials will be supplied by Holtec-approved supplier with CMTRs in accordance with NF-2000 requirements.
OVERPACK Baseplate and Lid Top Plate	NF-4441	Requires special examinations or requirements for welds where a primary member of thickness 1 inch or greater is loaded to transmit loads in the through thickness direction.	The ~~large~~ margins of safety in these welds under loads experienced during lifting operations or accident conditions are quite large. The OVERPACK baseplate welds to the inner shell, pedestal shell, and radial plates are only loaded during lifting conditions and have ~~a minimum~~ *large* safety factors ~~of > 12~~ during lifting. Likewise, ~~T~~the top lid plate to lid shell weld has a *large structural margin under the inertia loads imposed during a non-mechanistic tipover event.* ~~safety factor > 6 under a deceleration of 45 g's.~~
OVERPACK Steel Structure	NF-3256 *NF-3266*	Provides requirements for welded joints.	Welds for which no structural credit is taken are identified as "Non-NF" welds in the design drawings ~~by an "*"~~. These non-structural welds are specified in accordance with the pre-qualified welds of AWS D1.1. These welds shall be made by welders and weld procedures qualified in accordance with AWS D1.1 or ASME Section IX. *Welds for which structural credit is taken in the safety analyses shall meet the stress limits for NF-3256.2, but are not required to meet the joint configuration requirements specified in these Code articles. The geometry of the joint designs in the cask structures are based on the fabricability and accessibility of the joint, not generally contemplated by this Code section governing supports.*

Table 3-1 (page 9 of 59) LIST OF ASME CODE ~~EXCEPTIONS~~*ALTERNATIVES* FOR HI-STORM 100 CASK SYSTEM			
Component	**Reference ASME Code Section/Article**	**Code Requirement**	**~~Exception~~*Alternative*, Justification & Compensatory Measures**
HI-STORM OVERPACK and HI-TRAC TRANSFER CASK	*NF-3320* *NF-4720*	*NF-3324.6 and NF-4720 provide requirements for bolting*	*These Code requirements are applicable to linear structures wherein bolted joints carry axial, shear, as well as rotational (torsional) loads. The OVERPACK and TRANSFER CASK bolted connections in the structural load path are qualified by design based on the design loadings defined in the FSAR. Bolted joints in these components see no shear or torsional loads under normal storage conditions. Larger clearances between bolts and holes may be necessary to ensure shear interfaces located elsewhere in the structure engage prior to the bolts experiencing shear loadings (which occur only during side impact scenarios).* *Bolted joints that are subject to shear loads in accident conditions are qualified by appropriate stress analysis. Larger bolt-to-hole clearances help ensure more efficient operations in making these bolted connections, thereby minimizing time spent by operations personnel in a radiation area. Additionally, larger bolt-to-hole clearances allow interchangeability of the lids from one particular fabricated cask to another.*

DESIGN FEATURES (continued)

3.4 Site-Specific Parameters and Analyses

Site-specific parameters and analyses that will require verification by the system user are, as a minimum, as follows:

1. The temperature of 80° F is the maximum average yearly temperature.

2. The allowed temperature extremes, averaged over a 3-day period, shall be greater than -40° F and less than 125° F.

3. a. For free-standing casks, the resultant horizontal acceleration (vectorial sum of two horizontal Zero Period Accelerations (ZPAs) at a three-dimensional seismic site), G_H, and vertical ZPA, G_V, expressed as fractions of 'g', shall satisfy the following inequality:

$$G_H + \mu G_V \leq \mu$$

where μ is *either* the Coulomb friction coefficient for the HI-STORM 100/ISFSI pad interface *or the ratio r/h, where 'r' is the radius of the cask and 'h' is the height of the cask center-of-gravity above the ISFSI pad surface. The above inequality must be met for both definitions of μ.* Unless demonstrated by appropriate testing that a higher *coefficient of friction* value ~~of μ~~ is appropriate for a specific ISFSI, the value ~~of μ~~ used shall be 0.53. Representative values of G_H and G_V combinations for ~~μ~~ *a coefficient of friction* = 0.53 *to prevent sliding* are provided in Table 3-2. *If acceleration time histories on the ISFSI pad surface are available, G_H and G_V may be the coincident values of the instantaneous net horizontal and vertical accelerations. If instantaneous accelerations are used, the inequality shall be evaluated at each time step in the acceleration time history over the total duration of the seismic event.*

Table 3-2

Representative DBE Acceleration Values to Prevent HI-STORM 100 Sliding (μ = 0.53)

Equivalent Vectorial Sum of Two Horizontal ZPA's (G_H in g's)	Corresponding Vertical ZPA (G_V in g's)
0.445	0.160
0.424	0.200
0.397	0.250

(continued)

DESIGN FEATURES

3.4 Site-Specific Parameters and Analyses (continued)

b. For those ISFSI sites with design basis seismic acceleration values higher than those allowed for free-standing casks, the HI-STORM 100 System shall be anchored to the ISFSI pad. The site seismic characteristics and the anchorage system shall meet the following requirements:

i. The site acceleration response spectra at the top of the ISFSI pad shall have ZPAs that meet the following inequalities:

$$G_H \leq 2.12$$

AND

$$G_V \leq 1.5$$

Where:

G_H is the vectorial sum of the two horizontal ZPAs at a three-dimensional seismic site (or the horizontal ZPA at a two-dimensional site) and G_V is the vertical ZPA.

ii. Each HI-STORM 100 dry storage cask shall be anchored with twenty-eight (28), 2-inch diameter studs and compatible nuts of material suitable for the expected ISFSI environment. The studs shall meet the following requirements:

Yield Strength at Ambient Temperature: $\geq$ 80 ksi

Ultimate Strength at Ambient Temperature: $\geq$ 125 ksi

Initial Tensile Pre-Stress: $\geq$ 55 ksi AND $\leq$ 65 ksi

NOTE: The above anchorage specifications are required for the seismic spectra defined in item 3.4.3.b.i. Users may use fewer studs or those of different diameter to account for site-specific seismic spectra less severe than those specified above. The embedment design shall comply with Appendix B of ACI-349-97. A later edition of this Code may be used, provided a written reconciliation is performed.

iii. Embedment Concrete Compressive Strength: $\geq$ 4,000 psi at 28 days

(continued)

3.4 Site-Specific Parameters and Analyses (continued)

4. The analyzed flood condition of 15 fps water velocity and a height of 125 feet of water (full submergence of the loaded cask) are not exceeded.

5. The potential for fire and explosion shall be addressed, based on site-specific considerations. This includes the condition that the on-site transporter fuel tank will contain no more than 50 gallons of diesel fuel while handling a loaded OVERPACK or TRANSFER CASK.

6. a. For free-standing casks, the ISFSI pad shall be verified by analysis to limit cask deceleration during design basis drop and non-mechanistic tip-over events to ≤ 45 g's at the top of the MPC fuel basket. Analyses shall be performed using methodologies consistent with those described in the HI-STORM 100 FSAR. A lift height above the ISFSI pad is not required to be established if the cask is lifted with a device designed in accordance with ANSI N14.6 and having redundant drop protection features.

   b. For anchored casks, the ISFSI pad shall be designed to meet the embedment requirements of the anchorage design. A cask tip-over event for an anchored cask is not credible. The ISFSI pad shall be verified by analysis to limit cask deceleration during a design basis drop event to ≤ 45 g's at the top of the MPC fuel basket, except as provided for in this paragraph below. Analyses shall be performed using methodologies consistent with those described in the HI-STORM 100 FSAR. A lift height above the ISFSI pad is not required to be established if the cask is lifted with a device design in accordance with ANSI N14.6 and having redundant drop protection features.

7. In cases where engineered features (i.e., berms and shield walls) are used to ensure that the requirements of 10CFR72.104(a) are met, such features are to be considered important to safety and must be evaluated to determine the applicable Quality Assurance Category.

(continued)

DESIGN FEATURES

3.4 Site-Specific Parameters and Analyses (continued)

8. LOADING OPERATIONS, TRANSPORT OPERATIONS, and UNLOADING OPERATIONS shall only be conducted with working area ambient temperatures ≥ 0° F.

9. For those users whose site-specific design basis includes an event or events (e.g., flood) that result in the blockage of any OVERPACK inlet or outlet air ducts for an extended period of time (i.e, longer than the total Completion Time of LCO 3.1.2), an analysis or evaluation may be performed to demonstrate adequate heat removal is available for the duration of the event. Adequate heat removal is defined as fuel cladding temperatures remaining below the short term temperature limit. If the analysis or evaluation is not performed, or if fuel cladding temperature limits are unable to be demonstrated by analysis or evaluation to remain below the short term temperature limit for the duration of the event, provisions shall be established to provide alternate means of cooling to accomplish this objective.

10. For on-site TRANSPORT OPERATIONS with a loaded TRANSFER CASK, the requirements in Table 3-2a apply.

Table 3-2a
TRANSFER CASK Operating Limits (Notes 1 and 2)

TRANSFER CASK Orientation	***MPC Heat Load (kW)***	***Annulus Cooling Required?***
Vertical	*≤ 23*	*No*
Vertical	*> 23*	*Yes*
Horizontal	*≤ 19*	*No*
Horizontal	*> 19*	*Yes*

Notes:

1. *See FSAR Section 4.5 for examples of annulus cooling.*

2. *For short duration (≤ 6 hours) changes in orientation (e.g., vertical to horizontal to facilitate traversing a doorway), it is not necessary to change cooling requirements.*

(continued)

DESIGN FEATURES

3.5 Cask Transfer Facility (CTF)

3.5.1 TRANSFER CASK and MPC Lifters

Lifting of a loaded TRANSFER CASK and MPC ~~outside~~ *using devices that are not integral to* of structures governed by 10 CFR Part 50 shall be performed with a CTF that is designed, operated, fabricated, tested, inspected, and maintained in accordance with the guidelines of NUREG-0612, "Control of Heavy Loads at Nuclear Power Plants" and the below clarifications. The CTF Structure requirements below do not apply to heavy loads bounded by the regulations of 10 CFR Part 50.

3.5.2 CTF Structure Requirements

3.5.2.1 Cask Transfer Station and Stationary Lifting Devices

1. The metal weldment structure of the CTF structure shall be designed to comply with the stress limits of ASME Section III, Subsection NF, Class 3 for linear structures. The applicable loads, load combinations, and associated service condition definitions are provided in Table 3-3. All compression loaded members shall satisfy the buckling criteria of ASME Section III, Subsection NF.

2. If a portion of the CTF structure is constructed of reinforced concrete, then the factored load combinations set forth in ACI-318 (89) for the loads defined in Table 3-3 shall apply.

3. The TRANSFER CASK and MPC lifting device used with the CTF shall be designed, fabricated, operated, tested, inspected and maintained in accordance with NUREG-0612, Section 5.1.

4. The CTF shall be designed, constructed, and evaluated to ensure that if the MPC is dropped during inter-cask transfer operations, its confinement boundary would not be breached. This requirements applies to CTFs with either stationary or mobile lifting devices.

(continued)

DESIGN FEATURES

3.5.2.2 Mobile Lift Devices

If a mobile lifting device is used as the lifting device, in lieu of a stationary lifting device, is shall meet the guidelines of NUREG- 0612, Section 5.1, with the following clarifications:

1. Mobile lifting devices shall have a minimum safety factor of two over the allowable load table for the lifting device in accordance with the guidance of NUREG-0612, Section 5.1.6(1)(a) and shall be capable of stopping and holding the load during a Design Basis Earthquake (DBE) event.

2. Mobile lifting devices shall conform to meet the requirements of ANSI B30.5, "Mobile and Locomotive Cranes," in lieu of the requirements of ANSI B30.2, "Overhead and Gantry Cranes."

3. Mobile cranes are not required to meet the requirements of NUREG-0612, Section 5.1.6(2) for new cranes.

4. Horizontal movements of the TRANSFER CASK and MPC using a mobile crane are prohibited.

(continued)

DESIGN FEATURES

Table 3-3

Load Combinations and Service Condition Definitions for the CTF Structure (Note 1)

Load Combination	ASME III Service Condition for Definition of Allowable Stress	Comment
D* D + S	Level A	All primary load bearing members must satisfy Level A stress limits
D + M + W' (Note 2) D + F D + E D + Y	Level D	Factor of safety against overturning shall be ≥ 1.1

D = Dead load
D* = Apparent dead load
S = Snow and ice load for the CTF site
M = Tornado missile load for the CTF site
W' = Tornado wind load for the CTF site
F = Flood load for the CTF site
E = Seismic load for the CTF site
Y = Tsunami load for the CTF site

Notes:
1. The reinforced concrete portion of the CTF structure shall also meet the factored combinations of loads set forth in ACI-318(89).
2. Tornado missile load may be reduced or eliminated based on a PRA for the CTF site.

DESIGN FEATURES

3.6 Forced Helium Dehydration System

3.6.1 System Description

Use of the Forced Helium Dehydration (FHD) system, (a closed-loop system) is an alternative to vacuum drying the MPC for moderate burnup fuel (≤ 45,000 MWD/MTU) and mandatory for drying MPCs containing one or more high burnup fuel assemblies. The FHD system shall be designed for normal operation (i.e., excluding startup and shutdown ramps) in accordance with the criteria in Section 3.6.2.

3.6.2 Design Criteria

3.6.2.1 The temperature of the helium gas in the MPC shall be at least 15°F higher than the saturation temperature at coincident pressure.

3.6.2.2 The pressure in the MPC cavity space shall be ≤ 60.3 psig (75 psia).

3.6.2.3 The hourly recirculation rate of helium shall be ≥ 10 times the nominal helium mass backfilled into the MPC for fuel storage operations.

3.6.2.4 The partial pressure of the water vapor in the MPC cavity will not exceed 3 torr. *The limit will be met* if the ~~helium~~*gas* temperature at the demoisturizer outlet is *verified by measurement to remain* ≤ 21°F for a period of 30 minutes *or if the dew point of the gas exiting the MPC is verified by measurement to remain ≤ 22.9°F for ≥ 30 minutes* .

3.6.2.5 The condensing module shall be designed to de-vaporize the recirculating helium gas to a dew point ≤ 120°F.

3.6.2.6 The demoisturizing module shall be configured to be introduced into its helium conditioning function after the condensing module has been operated for the required length of time to assure that the bulk moisture vaporization in the MPC (defined as Phase 1 in FSAR Appendix 2.B) has been completed.

3.6.2.7 The helium circulator shall be sized to effect the minimum flow rate of circulation required by these design criteria.

3.6.2.8 The pre-heater module shall be engineered to ensure that the temperature of the helium gas in the MPC meets these design criteria.

(continued)

DESIGN FEATURES

3.6 Forced Helium Dehydration System (continued)

3.6.3 Fuel Cladding Temperature

A steady-state thermal analysis of the MPC under the forced helium flow scenario shall be performed using the methodology described in HI-STORM 100 FSAR *Section 4.4*,~~Subsections 4.4.1.1.1 through 4.4.1.1.4,~~ with due recognition of the forced convection process during FHD system operation. This analysis shall demonstrate that the peak temperature of the fuel cladding under the most adverse condition of FHD system operation, is below the peak cladding temperature limit for normal conditions of storage for the applicable fuel type (PWR or BWR) and cooling time at the start of dry storage.

CERTIFICATE OF COMPLIANCE FOR SPENT FUEL STORAGE CASKS

The U.S. Nuclear Regulatory Commission is issuing this Certificate of Compliance pursuant to Title 10 of the Code of Federal Regulations, Part 72, "Licensing Requirements for Independent Storage of Spent Nuclear Fuel and High-Level Radioactive Waste" (10 CFR Part 72). This certificate is issued in accordance with 10 CFR 72.238, certifying that the storage design and contents described below meet the applicable safety standards set forth in 10 CFR Part 72, Subpart L, and on the basis of the Final Safety Analysis Report (FSAR) of the cask design. This certificate is conditional upon fulfilling the requirements of 10 CFR Part 72, as applicable, and the conditions specified below.

Certificate No.	Effective Date	Expiration Date	Docket Number	Amendment No.	Amendment Date	Package Identification No.
1014	05/31/00	06/01/20	72-1014	2		USA/72-1014

Issued To: (Name/Address)

Holtec International
Holtec Center
555 Lincoln Drive West
Marlton, NJ 08053

Safety Analysis Report Title

Holtec International Final Safety Analysis Report for the HI-STORM 100 Cask System
Docket No. 72-1014

CONDITIONS

This certificate is conditioned upon fulfilling the requirements of 10 CFR Part 72, as applicable, the attached Appendix A (Technical Specifications) and Appendix B – (Approved Contents and Design Features), and the conditions specified below:

1. CASK

   a. Model No.: HI-STORM 100 Cask System

   The HI-STORM 100 Cask System (the cask) consists of the following components: (1) interchangeable multi-purpose canisters (MPCs), which contain the fuel; (2) a storage overpack (HI-STORM), which contains the MPC during storage; and (3) a transfer cask (HI-TRAC), which contains the MPC during loading, unloading and transfer operations. The cask stores up to 32 pressurized water reactor (PWR), fuel assemblies or 68 boiling water reactor (BWR) fuel assemblies.

   b. Description

   The HI-STORM 100 Cask System is certified as described in the Final Safety Analysis Report (FSAR) and in the U. S. Nuclear Regulatory Commission's (NRC) Safety Evaluation Report (SER) accompanying the Certificate of Compliance. The cask comprises three discrete components: the MPCs, the HI-TRAC transfer cask, and the HI-STORM storage overpack.

   The MPC is the confinement system for the stored fuel. It is a welded, cylindrical canister with a honeycombed fuel basket, a baseplate, a lid, a closure ring, and the canister shell. It is made entirely of stainless steel except for the neutron absorbers and aluminum heat conduction elements (AHCEs), which are installed in some early-vintage MPCs. The canister shell, baseplate, lid, vent and drain port cover plates, and closure ring are the main confinement boundary components. The honeycombed basket, which is equipped with neutron absorbers, provides criticality control.

1. b. Description (continued)

There are eight types of MPCs: the MPC-24, MPC-24E, MPC-24EF, MPC-32, MPC-32F, MPC-68, MPC-68F, and MPC-68FF. The number suffix indicates the maximum number of fuel assemblies permitted to be loaded in the MPC. All eight MPC models have the same external diameter.

The HI-TRAC transfer cask provides shielding and structural protection of the MPC during loading, unloading, and movement of the MPC from the spent fuel pool to the storage overpack. The transfer cask is a multi-walled (carbon steel/lead/carbon steel) cylindrical vessel with a water jacket attached to the exterior. Two sizes of HI-TRAC transfer casks are available: the 125 ton-HI-TRAC and the 100 ton HI-TRAC. The weight designation is the maximum weight of a loaded transfer cask during any loading, unloading or transfer operation. Both transfer cask sizes have identical cavity diameters. The 125 ton HI-TRAC transfer cask has thicker lead and water shielding and larger outer dimensions than the 100 ton HI-TRAC transfer cask.

The HI-STORM 100 or 100S storage overpack provides shielding and structural protection of the MPC during storage. The HI-STORM 100S is a variation of the HI-STORM 100 overpack design that includes a modified lid which incorporates the air outlet ducts into the lid, allowing the overpack body to be shortened. The overpack is a heavy-walled steel and concrete, cylindrical vessel. Its side wall consists of plain (un-reinforced) concrete that is enclosed between inner and outer carbon steel shells. The overpack has a minimum of four air inlets at the bottom and a minimum of four air outlets at the top to allow air to circulate naturally through the cavity to cool the MPC inside. The inner shell has channels attached to its interior surface to guide the MPC during insertion and removal, provide a flexible medium to absorb impact loads, and allow cooling air to circulate through the overpack. A loaded MPC is stored within the HI-STORM 100 or 100S storage overpack in a vertical orientation. The HI-STORM 100A is a variant of the HI-STORM 100 family and is outfitted with an extended baseplate and gussets to enable the overpack to be anchored to the concrete storage pad in high seismic applications. The HI-STORM 100A applies to both the HI-STORM 100 and HI-STORM 100S overpacks that are classified as the HI-STORM 100A and HI-STORM 100SA, respectively.

2. OPERATING PROCEDURES

Written operating procedures shall be prepared for cask handling, loading, movement, surveillance, and maintenance. The user's site-specific written operating procedures shall be consistent with the technical basis described in Chapter 8 of the FSAR.

3. ACCEPTANCE TESTS AND MAINTENANCE PROGRAM

Written cask acceptance tests and maintenance program shall be prepared consistent with the technical basis described in Chapter 9 of the FSAR.

4. QUALITY ASSURANCE

Activities in the areas of design, purchase, fabrication, assembly, inspection, testing, operation, maintenance, repair, modification of structures, systems and components, and decommissioning that are important to safety shall be conducted in accordance with a Commission-approved quality assurance program which satisfies the applicable requirements of 10 CFR Part 72, Subpart G, and which is established, maintained, and executed with regard to the cask system.

5. HEAVY LOADS REQUIREMENTS

Each lift of an MPC, a HI-TRAC transfer cask, or a HI-STORM 100 or 100S overpack must be made in accordance to the existing heavy loads requirements and procedures of the licensed facility at which the lift is made. A plant-specific safety review (under 10 CFR 50.59 or 10 CFR 72.48, if applicable) is required to show operational compliance with existing plant specific heavy loads requirements. Lifting operations outside of structures governed by 10 CFR Part 50 must be in accordance with Section 5.5 of Appendix A and/or Sections 3.4.6 and Section 3.5 of Appendix B to this certificate, as applicable.

6. APPROVED CONTENTS

Contents of the HI-STORM 100 Cask System must meet the fuel specifications given in Appendix B to this certificate.

7. DESIGN FEATURES

Features or characteristics for the site, cask, or ancillary equipment must be in accordance with Appendix B to this certificate.

8. CHANGES TO THE CERTIFICATE OF COMPLIANCE

The holder of this certificate who desires to make changes to the certificate, which includes Appendix A (Technical Specifications) and Appendix B (Approved Contents and Design Features), shall submit an application for amendment of the certificate.

9. SPECIAL REQUIREMENTS FOR FIRST SYSTEMS IN PLACE

The heat transfer characteristics of the cask system will be recorded by temperature measurements for the first HI-STORM Cask Systems (for each thermally unique MPC basket design - MPC-24/24E/24EF, MPC-32/32F, and MPC-68/68F/68FF) placed into service by any user with a heat load equal to or greater than 10 kW. An analysis shall be performed that demonstrates the temperature measurements validate the analytic methods and predicted thermal behavior described in Chapter 4 of the FSAR.

Validation tests shall be performed for each subsequent cask system that has a heat load that exceeds a previously validated heat load by more than 2 kW (e.g., if the initial test was conducted at 10 kW, then no additional testing is needed until the heat load exceeds 12 kW). No additional testing is required for a system after it has been tested at a heat load equal to or greater than 16 kW.

Letter reports summarizing the results of each validation test shall be submitted to the NRC in accordance with 10 CFR 72.4. Cask users may satisfy these requirements by referencing validation test reports submitted to the NRC by other cask users.

10. PRE-OPERATIONAL TESTING AND TRAINING EXERCISE

A dry run training exercise of the loading, closure, handling, unloading, and transfer of the HI-STORM 100 Cask System shall be conducted by the licensee prior to the first use of the system to load spent fuel assemblies. The training exercise shall not be conducted with spent fuel in the MPC. The dry run may be performed in an alternate step sequence from the actual procedures, but all steps must be performed. The dry run shall include, but is not limited to the following:

a. Moving the MPC and the transfer cask into the spent fuel pool.

b. Preparation of the HI-STORM 100 Cask System for fuel loading.

c. Selection and verification of specific fuel assemblies to ensure type conformance.

d. Loading specific assemblies and placing assemblies into the MPC (using a dummy fuel assembly), including appropriate independent verification.

e. Remote installation of the MPC lid and removal of the MPC and transfer cask from the spent fuel pool.

f. MPC welding, NDE inspections, pressure testing, draining, moisture removal (by vacuum drying or forced helium dehydration, as applicable), and helium backfilling. (A mockup may be used for this dry-run exercise.)

a. Transfer cask upending/downending on the horizontal transfer trailer or other transfer device, as applicable to the site's cask handling arrangement.

h. Transfer of the MPC from the transfer cask to the overpack.

i. Placement of the HI-STORM 100 Cask System at the ISFSI.

j. HI-STORM 100 Cask System unloading, including cooling fuel assemblies, flooding MPC cavity, removing MPC lid welds. (A mockup may be used for this dry-run exercise.)

11. AUTHORIZATION

The HI-STORM 100 Cask System, which is authorized by this certificate, is hereby approved for general use by holders of 10 CFR Part 50 licenses for nuclear reactors at reactor sites under the general license issued pursuant to 10 CFR 72.210, subject to the conditions specified by 10 CFR 72.212, and the attached Appendix A and Appendix B. The HI-STORM 100 Cask System may be fabricated and used in accordance with any approved amendment to CoC No. 1014 listed in 10 CFR 72.214. Each of the licensed HI-STORM 100 System components (i.e., the MPC, overpack, and transfer cask), if fabricated in accordance with different CoC amendments, may be used with one another provided the CoC does not specifically prohibit their use with each other, and a design compatibility assessment is performed by the CoC holder.

FOR THE U. S. NUCLEAR REGULATORY COMMISSION

E. William Brach, Director
Spent Fuel Project Office
Office of Nuclear Material Safety
and Safeguards

Attachments:
1. Appendix A
2. Appendix B

CERTIFICATE OF COMPLIANCE NO. 1014

APPENDIX A

TECHNICAL SPECIFICATIONS

FOR THE HI-STORM 100 CASK SYSTEM

TABLE OF CONTENTS

3.1 SFSC INTEGRITY

3.1.1 Multi-Purpose Canister (MPC)

LCO 3.1.1 The MPC shall be dry and helium filled.

APPLICABILITY: During TRANSPORT OPERATIONS and STORAGE OPERATIONS.

ACTIONS

NOTE

Separate Condition entry is allowed for each MPC.

CONDITION	REQUIRED ACTION	COMPLETION TIME
A. MPC cavity vacuum drying pressure or demoisturizer exit gas temperature limit not met.	A.1 Perform an engineering evaluation to determine the quantity of moisture left in the MPC. AND A.2 Develop and initiate corrective actions necessary to return the MPC to an analyzed condition.	7 days 30 days
B. MPC helium backfill limit not met.	B.1 Perform an engineering evaluation to determine the impact of helium differential. AND B.2 Develop and initiate corrective actions necessary to return the MPC to an analyzed condition.	72 hours 14 days

ACTIONS
(continued)

CONDITION	REQUIRED ACTION	COMPLETION TIME
C. Required Actions and associated Completion Times not met.	C.1 Remove all fuel assemblies from the SFSC.	30 days

SURVEILLANCE REQUIREMENTS

SURVEILLANCE		FREQUENCY
SR 3.1.1.1	Verify that the MPC cavity has been dried in accordance with the applicable limits in Table 3-1.	Once, prior to TRANSPORT OPERATIONS
SR 3.1.1.2	Verify MPC helium backfill quantity is within the limit specified in Table 3-2 for the applicable MPC model.	Once, prior to TRANSPORT OPERATIONS

3.1 SFSC INTEGRITY

3.1.2 SFSC Heat Removal System

LCO 3.1.2 The SFSC Heat Removal System shall be operable

APPLICABILITY: During STORAGE OPERATIONS.

ACTIONS

NOTE

Separate Condition entry is allowed for each SFSC.

CONDITION	REQUIRED ACTION	COMPLETION TIME
A. SFSC Heat Removal System inoperable.	A.1 Restore SFSC Heat Removal System to operable status.	8 hours
B. Required Action A.1 and associated Completion Time not met.	B.1 Measure SFSC dose rates in accordance with the Radiation Protection Program.	Immediately and once per 12 hours thereafter
	AND	
	B.2.1 Restore SFSC Heat Removal System to operable status.	64 hours, if MPC heat load is ≤ 28.74 kW OR 16 hours, if MPC heat load is > 28.74 kW
	OR	
	B.2.2 Transfer the MPC into a TRANSFER CASK.	64 hours, if MPC heat load is ≤ 28.74 kW OR 16 hours, if MPC heat load is > 28.74 kW

SURVEILLANCE REQUIREMENTS

SURVEILLANCE		FREQUENCY
SR 3.1.2.1	Verify all OVERPACK inlet and outlet air ducts are free of blockage.	24 hours
	OR	
	For OVERPACKS with installed temperature monitoring equipment, verify that the difference between the average OVERPACK air outlet temperature and ISFSI ambient temperature is ≤ 145°F.	24 hours

3.1 SFSC INTEGRITY

3.1.3 Fuel Cool-Down

LCO 3.1.3 The MPC cavity bulk helium temperature shall be ≤ 200° F

NOTE

The LCO is only applicable to wet UNLOADING OPERATIONS.

APPLICABILITY: UNLOADING OPERATIONS prior to re-flooding.

ACTIONS

NOTE

Separate Condition entry is allowed for each MPC.

CONDITION	REQUIRED ACTION	COMPLETION TIME
A. MPC cavity bulk helium temperature not within limit.	A.1 Establish MPC cavity bulk helium temperature within limit.	Prior to initiating MPC re-flooding operations
	AND	
	A.2 Ensure adequate heat transfer from the MPC to the environment.	Immediately

SURVEILLANCE REQUIREMENTS

SURVEILLANCE		FREQUENCY
SR 3.1.3.1	Ensure via analysis or direct measurement of MPC exit gas temperature that MPC cavity bulk helium temperature is within limit.	Prior to MPC re-flooding operations.

3.2 Deleted.

3.2.1 Deleted.

LCO 3.2.1 Deleted.

3.2 Deleted.

3.2.3 Deleted.

LCO 3.2.3 Deleted.

3.3 SFSC CRITICALITY CONTROL

3.3.1 Boron Concentration

LCO 3.3.1 As required by CoC Appendix B, Table 2.1-2, the concentration of boron in the water in the MPC shall meet the following limits for the applicable MPC model and the most limiting fuel assembly array/class and classification to be stored in the MPC:

a. MPC-24 with one or more fuel assemblies having an initial enrichment greater than the value in Table 2.1-2 for no soluble boron credit and ≤ 5.0 wt% ^{235}U: ≥ 400 ppmb

b. MPC-24E or MPC-24EF (all INTACT FUEL ASSEMBLIES) with one or more fuel assemblies having an initial enrichment greater than the value in Table 2.1-2 for no soluble boron credit and ≤ 5.0 wt% ^{235}U: ≥ 300 ppmb

c. Deleted.

d. Deleted.

e. MPC-24E or MPC-24EF (one or more DAMAGED FUEL ASSEMBLIES or FUEL DEBRIS) with one or more fuel assemblies having an initial enrichment > 4.0 wt% ^{235}U and ≤ 5.0 wt% ^{235} U: ≥ 600 ppmb

f. MPC-32/32F: Minimum soluble boron concentration as required by the table below.

Array/Class	All INTACT FUEL ASSEMBLIES		One or more DAMAGED FUEL ASSEMBLIES or FUEL DEBRIS	
	Initial Enrichment ≤ 4.1 wt% ^{235} U (ppmb)	Initial Enrichment ≤ 5.0 wt% ^{235} U (ppmb)	Initial Enrichment ≤ 4.1 wt% ^{235} U (ppmb)	Initial Enrichment ≤ 5.0 wt% ^{235} U (ppmb)
14x14A/B/C/D/E	1,300	1,900	1,500	2,300
15x15A/B/C/G	1,800	2,500	1,900	2,700
15x15D/E/F/H	1,900	2,600	2,100	2,900
16x16A	1,300	1,900	1,500	2,300
17x17A/B/C	1,900	2,600	2,100	2,900

APPLICABILITY: During PWR fuel LOADING OPERATIONS with fuel and water in the MPC

AND

During PWR fuel UNLOADING OPERATIONS with fuel and water in the MPC.

ACTIONS

NOTE

Separate Condition entry is allowed for each MPC.

CONDITION	REQUIRED ACTION	COMPLETION TIME
A. Boron concentration not within limit.	A.1 Suspend LOADING OPERATIONS or UNLOADING OPERATIONS.	Immediately
	AND	
	A.2 Suspend positive reactivity additions.	Immediately
	AND	
	A.3 Initiate action to restore boron concentration to within limit.	Immediately

SURVEILLANCE REQUIREMENTS

SURVEILLANCE	FREQUENCY
NOTE This surveillance is only required to be performed if the MPC is submerged in water or if water is to be added to, or recirculated through the MPC.	Once, within 4 hours prior to entering the Applicability of this LCO.
SR 3.3.1.1 Verify boron concentration is within the applicable limit using two independent measurements.	AND Once per 48 hours thereafter.

Table 3-1
MPC Cavity Drying Limits (Note 1)

Fuel Burnup (MWD/MTU)	MPC Heat Load (kW)	Method of Moisture Removal (Notes 2 and 3)	Other Requirements (Notes 4 and 5)
All Assemblies ≤ 45,000	≤ 9	VDS or FHD	None
All Assemblies ≤ 45,000	> 9 and ≤ 15	VDS or FHD	If VDS is used, annulus water recirculation is required
All Assemblies ≤ 45,000	> 9 and ≤ 17	VDS or FHD	If VDS is used, fuel cladding hoop stress shall be shown by analysis to be ≤ 90 MPa
All Assemblies ≤ 45,000	> 17 and ≤ 38	FHD	None
One or more assemblies > 45,000	≤ 38	FHD	None

Notes:

1. If the limits in two or more rows apply, the user may choose one set of limits to implement.

2. VDS means Vacuum Drying System. The acceptance criterion for VDS is MPC cavity pressure shall be ≤ 3 torr for ≥ 30 minutes.

3. FHD means Forced Helium Dehydration System. The acceptance criterion for the FHD System is gas temperature exiting the demoisturizer shall be ≤ 21°F for ≥ 30 minutes or gas dew point exiting the MPC shall be ≤ 22.9°F for ≥ 30 minutes .

4. Annulus water recirculation means a constant flow of water through the annulus between the MPC and the HI-TRAC inner shell during moisture removal operations (i.e., beginning prior to 10 torr descending and ending when helium backfill operations commence).

5. Fuel cladding hoop stress calculations may be performed using "best estimate" inputs.

Table 3-2
MPC Helium Backfill Limits[1]

MPC MODEL	LIMIT
MPC-24/24E/24EF	
i. Cask Heat Load ≤ 27.77 kW (MPC-24) or ≤ 28.17 kW (MPC-24E/EF)	≥ 29.3 psig and ≤ 48.8 psig
ii. Cask Heat Load > 27.77 kW (MPC-24) or > 28.17 kW (MPC-24E/EF)	≥ 45.2 psig and ≤ 48.8 psig
MPC-68/68F/68FF	
i. Cask Heat Load ≤ 28.19 kW	0.1218 +0/-10% g-moles/l
	OR
	≥ 29.3 psig and ≤ 48.8 psig
ii. Cask Heat Load > 28.19 kW	≥ 45.2 psig and ≤ 48.8 psig
MPC-32/32F	
i. Cask Heat Load ≤ 28.74 kW	≥ 29.3 psig and ≤ 48.8 psig
ii. Cask Heat Load > 28.74 kW	≥ 45.2 psig and ≤ 48.8 psig

1 Helium used for backfill of MPC shall have a purity of ≥ 99.995%. Pressure range is at a reference temperature of 70°F

5.0 ADMINISTRATIVE CONTROLS AND PROGRAMS

The following programs shall be established, implemented and maintained.

5.1 Deleted.

5.2 Deleted.

5.3 Deleted.

5.4 Radioactive Effluent Control Program

This program implements the requirements of 10 CFR 72.44(d).

a. The HI-STORM 100 Cask System does not create any radioactive materials or have any radioactive waste treatment systems. Therefore, specific operating procedures for the control of radioactive effluents are not required. Specification 3.1.1, Multi-Purpose Canister (MPC), provides assurance that there are not radioactive effluents from the SFSC.

b. This program includes an environmental monitoring program. Each general license user may incorporate SFSC operations into their environmental monitoring programs for 10 CFR Part 50 operations.

c. An annual report shall be submitted pursuant to 10 CFR 72.44(d)(3).

(continued)

5.5 Cask Transport Evaluation Program

This program provides a means for evaluating various transport configurations and transport route conditions to ensure that the design basis drop limits are met. For lifting of the loaded TRANSFER CASK or OVERPACK using devices which are integral to a structure governed by 10 CFR Part 50 regulations, 10 CFR 50 requirements apply. This program is not applicable when the TRANSFER CASK or OVERPACK is in the FUEL BUILDING or is being handled by a device providing support from underneath (i.e., on a rail car, heavy haul trailer, air pads, etc.).

Pursuant to 10 CFR 72.212, this program shall evaluate the site-specific transport route conditions.

a. For free-standing OVERPACKS and the TRANSFER CASK, the following requirements apply:

   1. The lift height above the transport route surface(s) shall not exceed the limits in Table 5-1 except as provided for in Specification 5.5.a.2. Also, the program shall ensure that the transport route conditions (i.e., surface hardness and pad thickness) are equivalent to or less limiting than either Set A or Set B in HI-STORM FSAR Table 2.2.9.

   2. For site-specific transport route surfaces that are not bounded by either the Set A or Set B parameters of FSAR Table 2.2.9, the program may determine lift heights by analysis based on the site-specific conditions to ensure that the impact loading due to design basis drop events does not exceed 45 g's at the top of the MPC fuel basket. These alternative analyses shall be commensurate with the drop analyses described in the Final Safety Analysis Report for the HI-STORM 100 Cask System. The program shall ensure that these alternative analyses are documented and controlled.

(continued)

5.5 Cask Transport Evaluation Program (continued)

3. The TRANSFER CASK or OVERPACK, when loaded with spent fuel, may be lifted to any height necessary during transportation between the FUEL BUILDING and the CTF and/or ISFSI pad, provided the lifting device is designed in accordance with ANSI N14.6 and has redundant drop protection features.

4. The TRANSFER CASK and MPC, when loaded with spent fuel, may be lifted to those heights necessary to perform cask handling operations, including MPC transfer, provided the lifts are made with structures and components designed in accordance with the criteria specified in Section 3.5 of Appendix B to Certificate of Compliance No. 1014, as applicable.

b. For the transport of OVERPACKS to be anchored to the ISFSI pad, the following requirements apply:

1. Except as provided in 5.5.b.2, user shall determine allowable OVERPACK lift height limit(s) above the transport route surface(s) based on site-specific transport route conditions. The lift heights shall be determined by evaluation or analysis, based on limiting the design basis cask deceleration during a postulated drop event to $\leq$ 45 g's at the top of the MPC fuel basket. Evaluations and/or analyses shall be performed using methodologies consistent with those in the HI-STORM 100 FSAR.

2. The OVERPACK, when loaded with spent fuel, may be lifted to any height necessary during transportation between the FUEL BUILDING and the CTF and/or ISFSI pad provided the lifting device is designed in accordance with ANSI N14.6 and has redundant drop protection features.

(continued)

5.5 Cask Transport Evaluation Program (continued)

Table 5-1

TRANSFER CASK and Free-Standing OVERPACK Lifting Requirements

ITEM	ORIENTATION	LIFTING HEIGHT LIMIT (in.)
TRANSFER CASK	Horizontal	42 (Notes 1 and 2)
TRANSFER CASK	Vertical	None Established (Note 2)
OVERPACK	Horizontal	Not Permitted
OVERPACK	Vertical	11 (Note 3)

Notes:
1. To be measured from the lowest point on the TRANSFER CASK (i.e., the bottom edge of the cask/lid assemblage)
2. See Technical Specification 5.5.a.3 and 4
3. See Technical Specification 5.5.a.3.

(continued)

5.6 Deleted.

5.7 Radiation Protection Program

5.7.1 Each cask user shall ensure that the Part 50 radiation protection program appropriately addresses dry storage cask loading and unloading, as well as ISFSI operations, including transport of the loaded OVERPACK or TRANSFER CASK outside of facilities governed by 10 CFR Part 50. The radiation protection program shall include appropriate controls for measuring dose rates, ensuring compliance with applicable regulations, and implementing actions to maintain personnel occupational exposures As Low As Reasonably Achievable (ALARA). This program provides a means to help ensure that licensees using the HI-STORM 100 System do not violate the dose limits in 10 CFR 72. The actions and criteria to be included in the program are provided below.

5.7.2 As part of its evaluation pursuant to 10 CFR 72.212(b)(2)(i)(C), the licensee shall perform an analysis to confirm that the dose limits of 10 CFR 72.104(a) will be satisfied under the actual site conditions and ISFSI configuration, considering the planned number of casks to be deployed and the cask contents.

5.7.3 Based on the analysis performed pursuant to Section 5.7.2, the licensee shall establish cask surface dose rate limits for the HI-TRAC TRANSFER CASK and the HI-STORM OVERPACK to be used at the site. Average neutron and gamma dose rate limits shall be established at the following locations:

a. The top of the TRANSFER CASK and the OVERPACK.
b. The side of the TRANSFER CASK and OVERPACK
c. The average of the inlet and outlet ducts on the OVERPACK

5.7.4 The licensee shall measure the TRANSFER CASK and OVERPACK surface neutron and gamma dose rates and calculate average values as described in Section 5.7.7 and 5.7.8 for comparison against the limits established in Section 5.7.3.

5.7.5 If the measured average surface dose rates exceed the limits established in Section 5.7.3, the licensee shall:

a. Administratively verify that the correct contents were loaded in the correct fuel storage cell locations.
b. Perform an evaluation to verify whether placement of the as-loaded OVERPACK at the ISFSI will cause the dose limits of 10 CFR 72.104 to be exceeded.

5.7.6 If the evaluation performed pursuant to Section 5.7.5 shows that the dose limits of 10 CFR 72.104 will be exceeded, appropriate corrective action shall be taken to ensure the dose limits are not exceeded.

ADMINISTRATIVE CONTROLS AND PROGRAMS

5.7 Radiation Protection Program (cont'd)

5.7.7 TRANSFER CASK and OVERPACK surface dose rates shall be measured at approximately the following locations:

a. A minimum of 12 dose rate measurements shall be taken on the side of the TRANSFER CASK in three sets of four measurements. One measurement set shall be taken approximately at the cask mid-height plane. The second and third measurement sets shall be taken approximately 60 inches above and below the mid-height plane, respectively. Within each set, the measurement locations shall be approximately 90 degrees apart around the circumference of the cask. Dose rates shall be measured between the radial ribs of the water jacket.

b. A minimum of four (4) TRANSFER CASK top lid dose rates shall be measured at locations approximately half way between the edge of the hole in the top lid and the outer edge of the top lid, 90 degrees apart around the circumference of the top lid.

c. A minimum of 12 dose rate measurements shall be taken on the side of the OVERPACK in three sets of four measurements. One measurement set shall be taken approximately at the cask mid-height plane, 90 degrees apart around the circumference of the cask. The second and third measurement sets shall be taken approximately 60 inches above and below the mid-height plane, respectively, also 90 degrees apart around the circumference of the cask.

d. A minimum of five (5) dose rate measurements shall be taken on the top of the OVERPACK. One dose rate measurement shall be taken at approximately the center of the lid and four measurements shall be taken at locations on the top concrete shield, approximately half way between the center and the edge of the top shield, 90 degrees apart around the circumference of the lid.

e. A dose rate measurement shall be taken on contact at the surface of each inlet and outlet vent duct screen.

5.7.8 The average measured dose rates shall be calculated by summing the individual neutron and gamma dose rates measured in Sections 5.7.7.a through 5.7.7.e and dividing by the total number of measurements for that section. The neutron and gamma dose rates shall be averaged separately.

CERTIFICATE OF COMPLIANCE NO. 1014

APPENDIX B

APPROVED CONTENTS AND DESIGN FEATURES

FOR THE HI-STORM 100 CASK SYSTEM

1.0 Definitions

NOTE

The defined terms of this section appear in capitalized type and are applicable throughout these Technical Specifications and Bases.

Term	Definition
CASK TRANSFER FACILITY (CTF)	The CASK TRANSFER FACILITY includes the following components and equipment: (1) a Cask Transfer Structure used to stabilize the TRANSFER CASK and MPC during lifts involving spent fuel not bounded by the regulations of 10 CFR Part 50, and (2) Either a stationary lifting device or a mobile lifting device used in concert with the stationary structure to lift the OVERPACK, TRANSFER CASK, and MPC
DAMAGED FUEL ASSEMBLY	DAMAGED FUEL ASSEMBLIES are fuel assemblies with known or suspected cladding defects, as determined by a review of records, greater than pinhole leaks or hairline cracks, empty fuel rod locations that are not filled with dummy fuel rods, or those that cannot be handled by normal means. Fuel assemblies that cannot be handled by normal means due to fuel cladding damage are considered FUEL DEBRIS.
DAMAGED FUEL CONTAINER (DFC)	DFCs are specially designed enclosures for DAMAGED FUEL ASSEMBLIES or FUEL DEBRIS which permit gaseous and liquid media to escape while minimizing dispersal of gross particulates. DFCs authorized for use in the HI-STORM 100 System are as follows: 1. Holtec Dresden Unit 1/Humboldt Bay design 2. Transnuclear Dresden Unit 1 design 3. Holtec Generic BWR design 4. Holtec Generic PWR design
FUEL DEBRIS	FUEL DEBRIS is ruptured fuel rods, severed rods, loose fuel pellets or fuel assemblies with known or suspected defects which cannot be handled by normal means due to fuel cladding damage.

(continued)

1.0 Definitions (continued)

INTACT FUEL ASSEMBLY	INTACT FUEL ASSEMBLIES are fuel assemblies without known or suspected cladding defects greater than pinhole leaks or hairline cracks and which can be handled by normal means. Fuel assemblies without fuel rods in fuel rod locations shall not be classified as INTACT FUEL ASSEMBLIES unless dummy fuel rods are used to displace an amount of water greater than or equal to that displaced by the fuel rod(s).
LOADING OPERATIONS	LOADING OPERATIONS include all licensed activities on an OVERPACK or TRANSFER CASK while it is being loaded with fuel assemblies. LOADING OPERATIONS begin when the first fuel assembly is placed in the MPC and end when the OVERPACK or TRANSFER CASK is suspended from or secured on the transporter. LOADING OPERATIONS does not included MPC transfer between the TRANSFER CASK and the OVERPACK.
MINIMUM ENRICHMENT	MINIMUM ENRICHMENT is the minimum assembly average enrichment. Natural uranium blankets are not considered in determining minimum enrichment.
MULTI-PURPOSE CANISTER (MPC)	MPCs are the sealed spent nuclear fuel canisters which consist of a honeycombed fuel basket contained in a cylindrical canister shell which is welded to a baseplate, lid with welded port cover plates, and closure ring. The MPC provides the confinement boundary for the contained radioactive materials.
NON-FUEL HARDWARE	NON-FUEL HARDWARE is defined as Burnable Poison Rod Assemblies (BPRAs), Thimble Plug Devices (TPDs), Control Rod Assemblies (CRAs), Axial Power Shaping Rods (APSRs), Wet Annular Burnable Absorbers (WABAs), Rod Cluster Control Assemblies (RCCAs), Control Element Assemblies (CEAs), water displacement guide tube plugs, orifice rod assemblies, and vibration suppressor inserts.
OVERPACK	OVERPACKs are the casks which receive and contain the sealed MPCs for interim storage on the ISFSI. They provide gamma and neutron shielding, and provide for ventilated air flow to promote heat transfer from the MPC to the environs. The OVERPACK does not include the TRANSFER CASK.

(continued)

1.0 Definitions (continued)

PLANAR-AVERAGE INITIAL ENRICHMENT	PLANAR-AVERAGE INITIAL ENRICHMENT is the average of the distributed fuel rod initial enrichments within a given axial plane of the assembly lattice.
SPENT FUEL STORAGE CASKS (SFSCs)	An SFSC is a container approved for the storage of spent fuel assemblies at the ISFSI. The HI-STORM 100 SFSC System consists of the OVERPACK and its integral MPC.
TRANSFER CASK	TRANSFER CASKs are containers designed to contain the MPC during and after loading of spent fuel assemblies and to transfer the MPC to or from the OVERPACK. The HI-STORM 100 System employs either the 125-Ton or the 100-Ton HI-TRAC TRANSFER CASK.
TRANSPORT OPERATIONS	TRANSPORT OPERATIONS include all licensed activities performed on an OVERPACK or TRANSFER CASK loaded with one or more fuel assemblies when it is being moved to and from the ISFSI. TRANSPORT OPERATIONS begin when the OVERPACK or TRANSFER CASK is first suspended from or secured on the transporter and end when the OVERPACK or TRANSFER CASK is at its destination and no longer secured on or suspended from the transporter. TRANSPORT OPERATIONS include transfer of the MPC between the OVERPACK and the TRANSFER CASK.
UNLOADING OPERATIONS	UNLOADING OPERATIONS include all licensed activities on an SFSC to be unloaded of the contained fuel assemblies. UNLOADING OPERATIONS begin when the OVERPACK or TRANSFER CASK is no longer suspended from or secured on the transporter and end when the last fuel assembly is removed from the SFSC. UNLOADING OPERATIONS does not include MPC transfer between the TRANSFER CASK and the OVERPACK.
ZR	ZR means any zirconium-based fuel cladding material authorized for use in a commercial nuclear power plant reactor.

2.0 APPROVED CONTENTS

2.1 Fuel Specifications and Loading Conditions

2.1.1 Fuel To Be Stored In The HI-STORM 100 SFSC System

a. INTACT FUEL ASSEMBLIES, DAMAGED FUEL ASSEMBLIES, FUEL DEBRIS, and NON-FUEL HARDWARE meeting the limits specified in Table 2.1-1 and other referenced tables may be stored in the HI-STORM 100 SFSC System.

b. For MPCs partially loaded with stainless steel clad fuel assemblies, all remaining fuel assemblies in the MPC shall meet the decay heat generation limit for the stainless steel clad fuel assemblies.

c. Deleted.

d. For MPCs partially loaded with array/class 6x6A, 6x6B, 6x6C, 7x7A, or 8x8A fuel assemblies, all remaining ZR clad INTACT FUEL ASSEMBLIES in the MPC shall meet the decay heat generation limits for the 6x6A, 6x6B, 6x6C, 7x7A and 8x8A fuel assemblies.

e. All BWR fuel assemblies may be stored with or without ZR channels with the exception of array/class 10x10D and 10x10E fuel assemblies, which may be stored with or without ZR or stainless steel channels.

2.1.2 Uniform Fuel Loading

Any authorized fuel assembly may be stored in any fuel cell location, subject to other restrictions related to DAMAGED FUEL, FUEL DEBRIS, and NON-FUEL HARDWARE specified in the CoC.

(continued)

2.0 Approved Contents

2.1 Fuel Specifications and Loading Conditions (cont'd)

2.1.3 Regionalized Fuel Loading

Users may choose to store fuel using regionalized loading in lieu of uniform loading to allow higher heat emitting fuel assemblies to be stored than would otherwise be able to be stored using uniform loading. Regionalized loading is limited to those fuel assemblies with ZR cladding. Figures 2.1-1 through 2.1-4 define the regions for the MPC-24, MPC-24E, MPC-24EF, MPC-32, MPC-32F, MPC-68, and MPC-68FF models, respectively[1]. Fuel assembly burnup, decay heat, and cooling time limits for regionalized loading are specified in Section 2.4.2. Fuel assemblies used in regionalized loading shall meet all other applicable limits specified in Tables 2.1-1 through 2.1-3.

2.2 Violations

If any Fuel Specifications or Loading Conditions of 2.1 are violated, the following actions shall be completed:

2.2.1 The affected fuel assemblies shall be placed in a safe condition.

2.2.2 Within 24 hours, notify the NRC Operations Center.

2.2.3 Within 30 days, submit a special report which describes the cause of the violation, and actions taken to restore compliance and prevent recurrence.

2.3 Deviations from Cask Contents Requirements

Proposed alternatives to the contents listed in Section 2.0 may be authorized on a case-specific basis by the Director of the Office of Nuclear Material Safety and Safeguards or designee. The request for such alternative contents should demonstrate that:

2.3.1 The proposed alternative contents would provide an equivalent level of safety, and

2.3.2 The proposed alternative contents are consistent with the applicable requirements.

---

[1] These figures are only intended to distinguish the fuel loading regions. Other details of the basket design are illustrative and may not reflect the actual basket design details. The design drawings should be consulted for basket design details.

2.0 APPROVED CONTENTS

2.3 Deviations from Cask Contents Requirements (cont'd)

2.3.3 Requests for case-specific NRC approval of alternatives to contents shall be submitted in accordance with 10 CFR 72.4 by the certificate holder. Case-specific alternatives approved pursuant to this section shall be incorporated permanently into the CoC by the certificate holder in accordance with 10 CFR 72.244. Requests made pursuant to this section must meet all of the following requirements:

2.3.3.1 The proposed change must not significantly decrease any safety margins as described in the HI-STORM 100 System FSAR, as updated.

2.3.3.2 The proposed change may involve only the physical fuel assembly parameters listed below as specified in Tables 2.1-1, 2.1-2, and/or 2.1-3 of this Appendix:

a. Fuel Assembly Length
b. Fuel Assembly Width
c. Fuel Assembly Weight
d. Fuel Rod Clad Outside Diameter (OD)
e. Fuel Rod Clad Inside Diameter (ID)
f. Fuel Pellet Diameter
g. Fuel Rod Pitch
h. PWR Guide/Instrument Tube Thickness
i. BWR Water Rod Thickness
j. BWR Channel Thickness

2.3.3.3 The proposed change must be required to meet a compelling user need whereby using the normal certificate amendment process is not practical.

LEGEND:

REGION 1:

REGION 2:

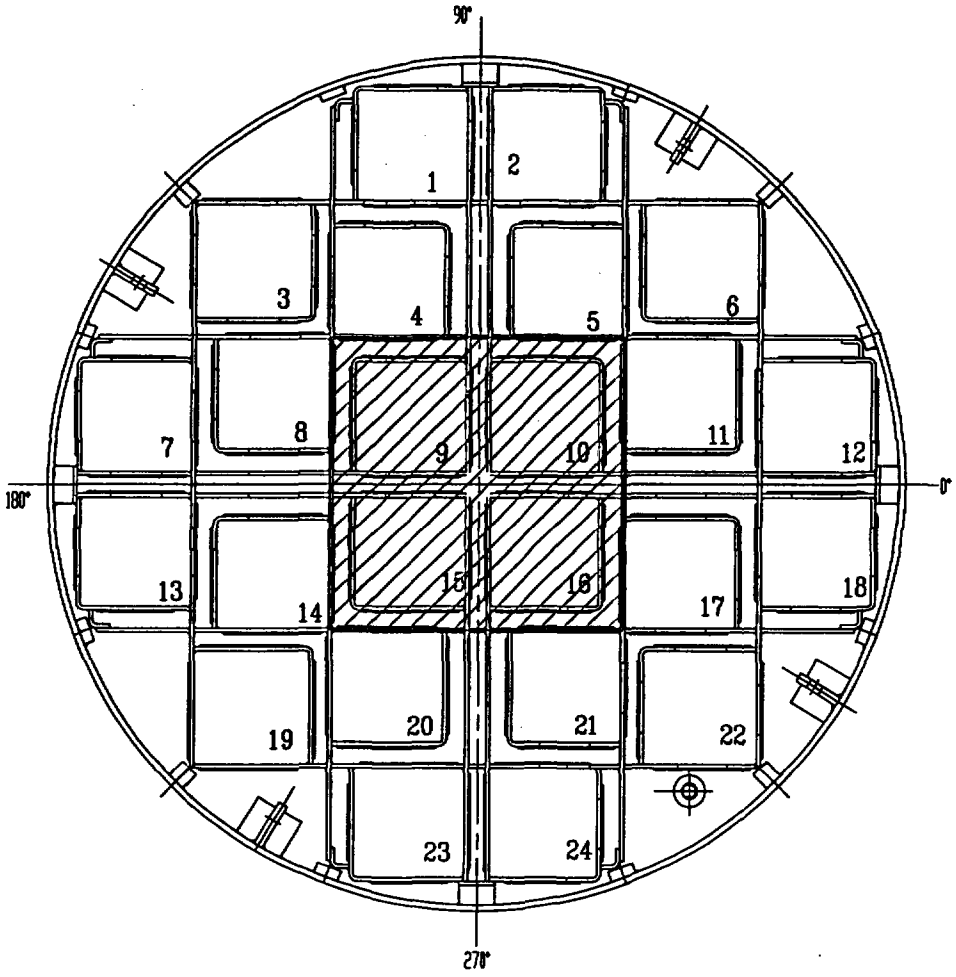

FIGURE 2.1-1
FUEL LOADING REGIONS - MPC-24

LEGEND:

REGION 1:

REGION 2:

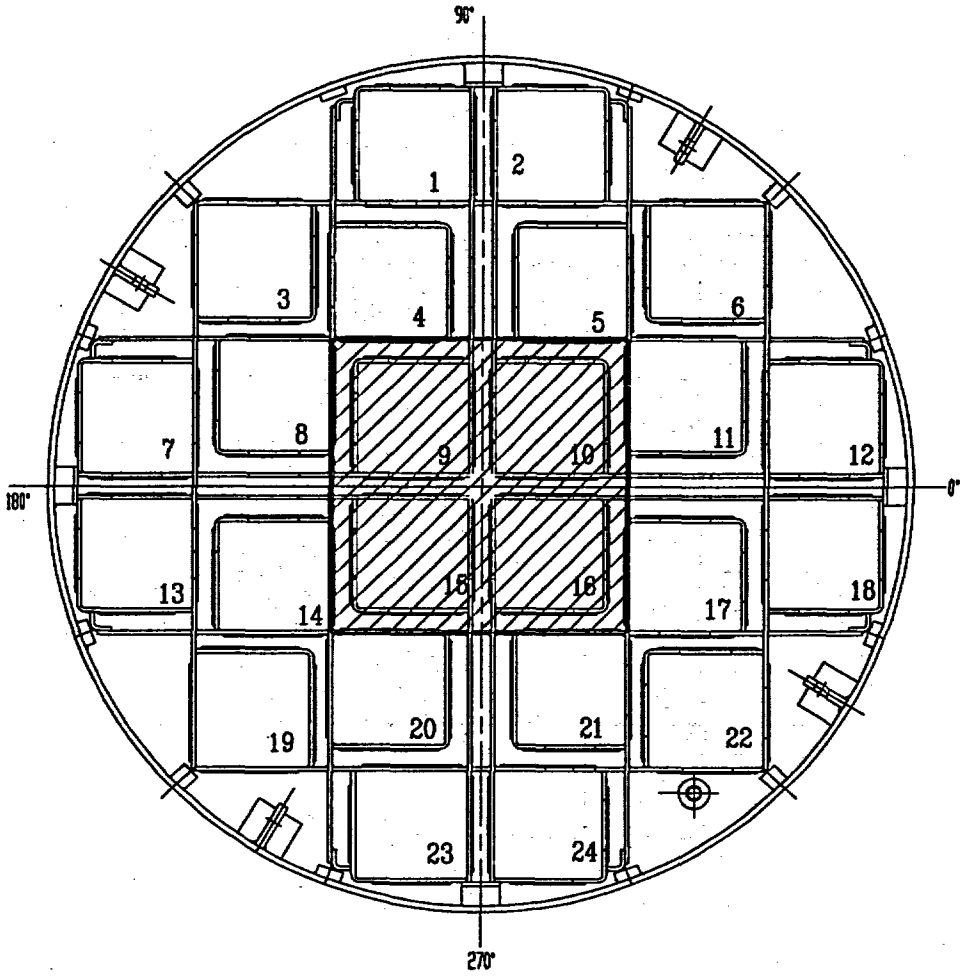

FIGURE 2.1-2

FUEL LOADING REGIONS - MPC-24E/24EF

LEGEND:

REGION 1:

REGION 2:

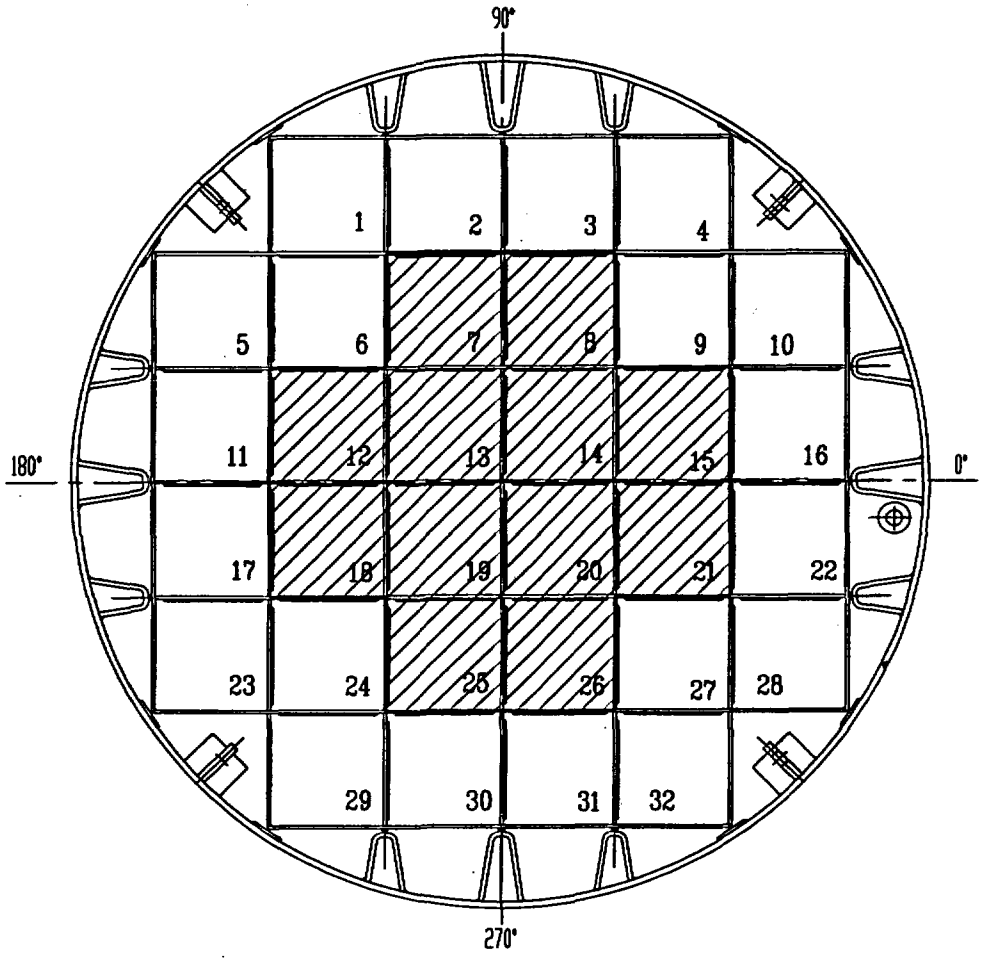

FIGURE 2.1-3

FUEL LOADING REGIONS - MPC-32/32F

LEGEND:

REGION 1:

REGION 2:

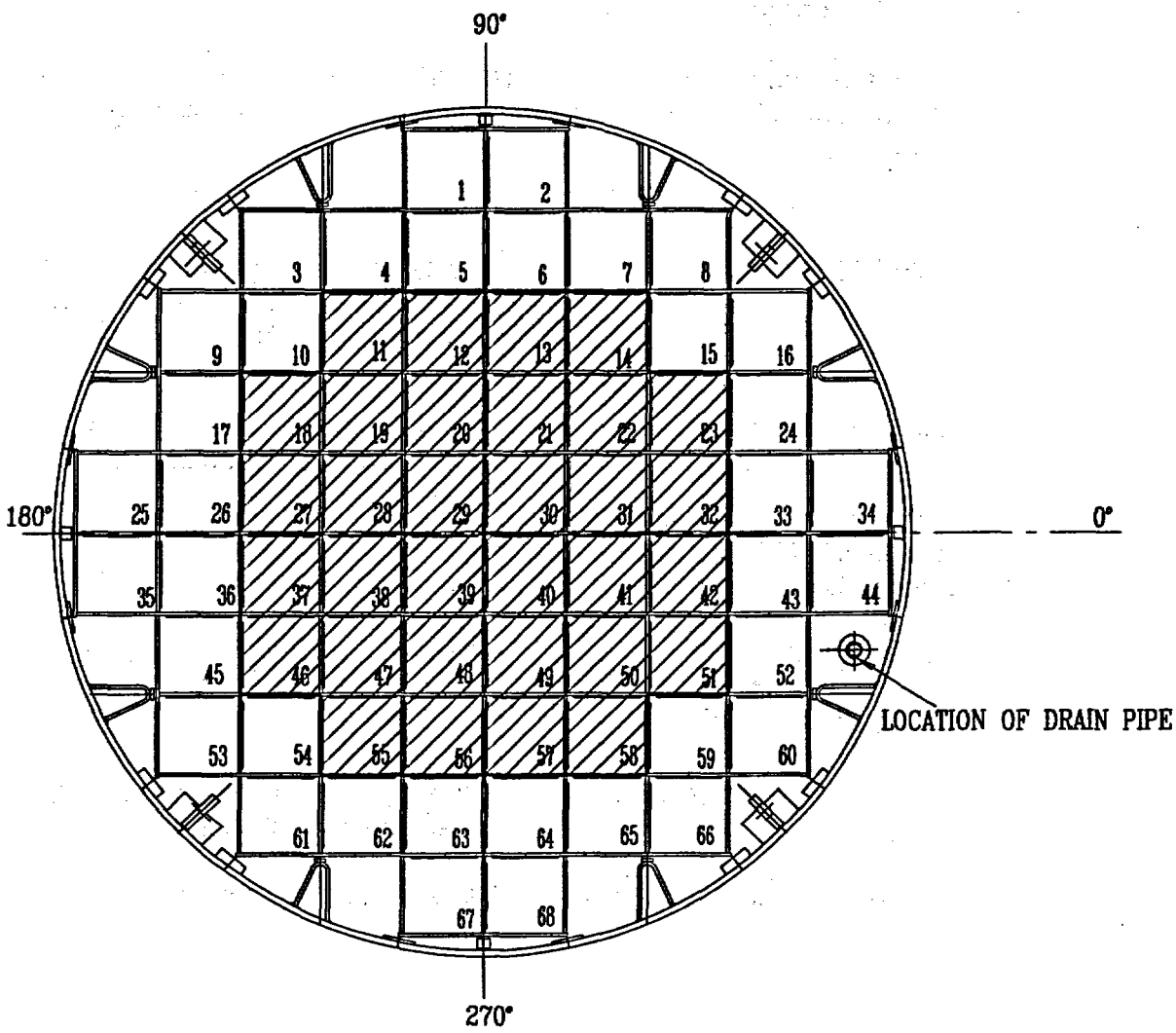

FIGURE 2.1-4

FUEL LOADING REGIONS - MPC-68/68FF

Table 2.1-1 (page 1 of 39)
Fuel Assembly Limits

I. MPC MODEL: MPC-24

A. Allowable Contents

1. Uranium oxide, PWR INTACT FUEL ASSEMBLIES listed in Table 2.1-2, with or without NON-FUEL HARDWARE and meeting the following specifications (Note 1):

a. Cladding Type:	ZR or Stainless Steel (SS) as specified in Table 2.1-2 for the applicable fuel assembly array/class.
b. Initial Enrichment:	As specified in Table 2.1-2 for the applicable fuel assembly array/class.
c. Post-irradiation Cooling Time and Average Burnup Per Assembly:	
i. Array/Classes 14x14D,14x14E, and 15x15G	Cooling time ≥ 8 years and an average burnup ≤ 40,000 MWD/MTU.
ii. All Other Array/Classes	Cooling time and average burnup as specified in Section 2.4.
iii. NON-FUEL HARDWARE	As specified in Table 2.1-8.

Table 2.1-1 (page 2 of 39)
Fuel Assembly Limits

I. MPC MODEL: MPC-24 (continued)

A. Allowable Contents (continued)

d. Decay Heat Per Assembly:

i. Array/Classes 14x14D, 14x14E, and 15x15G	≤ 710 Watts
ii All Other Array/Classes	As specified in Section 2.4.
e. Fuel Assembly Length:	≤ 176.8 inches (nominal design)
f. Fuel Assembly Width:	≤ 8.54 inches (nominal design)
g. Fuel Assembly Weight:	≤ 1,680 lbs (including NON-FUEL HARDWARE)

B. Quantity per MPC: Up to 24 fuel assemblies.

C. Deleted.

D. Neutron sources and DAMAGED FUEL ASSEMBLIES and FUEL DEBRIS are not authorized for loading into the MPC-24.

Note 1: Fuel assemblies containing BPRAs, TPDs, WABAs, water displacement guide tube plugs, orifice rod assemblies, or vibration suppressor inserts may be stored in any fuel cell location. Fuel assemblies containing CRAs, RCCAs, CEAs, or APSRs may only be loaded in fuel storage locations 9, 10, 15, and/or 16. These requirements are in addition to any other requirements specified for uniform or regionalized fuel loading.

Table 2.1-1 (page 3 of 39)
Fuel Assembly Limits

II. MPC MODEL: MPC-68

A. Allowable Contents

1. Uranium oxide, BWR INTACT FUEL ASSEMBLIES listed in Table 2.1-3, with or without channels, and meeting the following specifications:

a. Cladding Type:	ZR or Stainless Steel (SS) as specified in Table 2.1-3 for the applicable fuel assembly array/class.
b. Maximum PLANAR-AVERAGE INITIAL ENRICHMENT:	As specified in Table 2.1-3 for the applicable fuel assembly array/class.
c. Initial Maximum Rod Enrichment:	As specified in Table 2.1-3 for the applicable fuel assembly array/class.
d. Post-irradiation Cooling Time and Average Burnup Per Assembly:	
i. Array/Classes 6x6A, 6x6C, 7x7A, and 8x8A:	Cooling time ≥ 18 years and an average burnup ≤ 30,000 MWD/MTU
ii. Array/Class 8x8F	Cooling time ≥ 10 years and an average burnup ≤ 27,500 MWD/MTU.
iii. Array/Classes 10x10D and 10x10E	Cooling time ≥ 10 years and an average burnup ≤ 22,500 MWD/MTU.
iv. All Other Array/Classes	As specified in Section 2.4.

Table 2.1-1 (page 4 of 39)
Fuel Assembly Limits

II. MPC MODEL: MPC-68 (continued)

A. Allowable Contents (continued)

e. Decay Heat Per Assembly:

i. Array/Classes 6x6A, 6x6C, 7x7A, and 8x8A	≤ 115 Watts
ii. Array/Class 8x8F	≤ 183.5 Watts.
iii. Array/Classes 10x10D and 10x10E	≤ 95 Watts
iv. All Other Array/Classes	As specified in Section 2.4.

f. Fuel Assembly Length:	≤ 176.5 inches (nominal design)
g. Fuel Assembly Width:	≤ 5.85 inches (nominal design)
h. Fuel Assembly Weight:	≤ 700 lbs, including channels

Table 2.1-1 (page 5 of 39)
Fuel Assembly Limits

II. MPC MODEL: MPC-68 (continued)

A. Allowable Contents (continued)

2. Uranium oxide, BWR DAMAGED FUEL ASSEMBLIES, with or without channels, placed in DAMAGED FUEL CONTAINERS. Uranium oxide BWR DAMAGED FUEL ASSEMBLIES shall meet the criteria specified in Table 2.1-3 and meet the following specifications:

a. Cladding Type:	ZR or Stainless Steel (SS) as specified in Table 2.1-3 for the applicable fuel assembly array/class.
b. Maximum PLANAR-AVERAGE INITIAL ENRICHMENT:	
i. Array/Classes 6x6A, 6x6C, 7x7A, and 8x8A	As specified in Table 2.1-3 for the applicable fuel assembly array/class.
ii. All Other Array/Classes specified in Table 2.1-3	4.0 wt% ^{235}U
c. Initial Maximum Rod Enrichment:	As specified in Table 2.1-3 for the applicable fuel assembly array/class.
d. Post-irradiation Cooling Time and Average Burnup Per Assembly:	
i. Array/Classes 6x6A, 6x6C, 7x7A,and 8x8A	Cooling time $\geq$ 18 years and an average burnup $\leq$ 30,000 MWD/MTU.
ii. Array/Class 8x8F	Cooling time $\geq$ 10 years and an average burnup $\leq$ 27,500 MWD/MTU.
iii. Array/Classes 10x10D and 10x10E	Cooling time $\geq$ 10 years and an average burnup $\leq$ 22,500 MWD/MTU.
iv. All Other Array Classes	As specified in Section 2.4.

Table 2.1-1 (page 6 of 39)
Fuel Assembly Limits

II. MPC MODEL: MPC-68 (continued)

A. Allowable Contents (continued)

e. Decay Heat Per Assembly:

i.	Array/Class 6x6A, 6x6C, 7x7A, and 8x8A	≤ 115 Watts
ii.	Array/Class 8x8F	≤ 183.5 Watts
iii.	Array/Classes 10x10D and 10x10E	≤ 95 Watts
iv.	All Other Array/Classes	As specified in Section 2.4.

f. Fuel Assembly Length:

i.	Array/Class 6x6A, 6x6C, 7x7A, or 8x8A	≤ 135.0 inches (nominal design)
ii.	All Other Array/Classes	≤ 176.5 inches (nominal design)

g. Fuel Assembly Width:

i.	Array/Class 6x6A, 6x6C, 7x7A, or 8x8A	≤ 4.70 inches (nominal design)
ii.	All Other Array/Classes	≤ 5.85 inches (nominal design)

h. Fuel Assembly Weight:

i.	Array/Class 6x6A, 6x6C, 7x7A, or 8x8A	≤ 550 lbs, including channels and DFC
ii.	All Other Array/Classes	≤ 700 lbs, including channels and DFC

Table 2.1-1 (page 7 of 39)
Fuel Assembly Limits

II. MPC MODEL: MPC-68 (continued)

A. Allowable Contents (continued)

3. Mixed oxide (MOX), BWR INTACT FUEL ASSEMBLIES, with or without channels. MOX BWR INTACT FUEL ASSEMBLIES shall meet the criteria specified in Table 2.1-3 for fuel assembly array/class 6x6B, and meet the following specifications:

a. Cladding Type:	ZR
b. Maximum PLANAR-AVERAGE INITIAL ENRICHMENT:	As specified in Table 2.1-3 for fuel assembly array/class 6x6B.
c. Initial Maximum Rod Enrichment:	As specified in Table 2.1-3 for fuel assembly array/class 6x6B.
d. Post-irradiation Cooling Time and Average Burnup Per Assembly:	Cooling time ≥ 18 years and an average burnup ≤ 30,000 MWD/MTIHM.
e. Decay Heat Per Assembly:	≤ 115 Watts
f. Fuel Assembly Length:	≤ 135.0 inches (nominal design)
g. Fuel Assembly Width:	≤ 4.70 inches (nominal design)
h. Fuel Assembly Weight:	≤ 400 lbs, including channels

Table 2.1-1 (page 8 of 39)
Fuel Assembly Limits

II. MPC MODEL: MPC-68 (continued)

A. Allowable Contents (continued)

4. Mixed oxide (MOX), BWR DAMAGED FUEL ASSEMBLIES, with or without channels, placed in DAMAGED FUEL CONTAINERS. MOX BWR DAMAGED FUEL ASSEMBLIES shall meet the criteria specified in Table 2.1-3 for fuel assembly array/class 6x6B, and meet the following specifications:

a. Cladding Type:	ZR
b. Maximum PLANAR-AVERAGE INITIAL ENRICHMENT:	As specified in Table 2.1-3 for array/class 6x6B.
c. Initial Maximum Rod Enrichment:	As specified in Table 2.1-3 for array/class 6x6B.
d. Post-irradiation Cooling Time and Average Burnup Per Assembly:	Cooling time ≥ 18 years and an average burnup ≤ 30,000 MWD/MTIHM.
e. Decay Heat Per Assembly:	≤ 115 Watts
f. Fuel Assembly Length:	≤ 135.0 inches (nominal design)
g. Fuel Assembly Width:	≤ 4.70 inches (nominal design)
h. Fuel Assembly Weight:	≤ 550 lbs, including channels and DFC

Table 2.1-1 (page 9 of 39)
Fuel Assembly Limits

II. MPC MODEL: MPC-68 (continued)

A. Allowable Contents (continued)

5. Thoria rods (ThO_2 and UO_2) placed in Dresden Unit 1 Thoria Rod Canisters and meeting the following specifications:

a. Cladding Type:	ZR
b. Composition:	98.2 wt.% ThO_2, 1.8 wt. % UO_2 with an enrichment of 93.5 wt. % ^{235}U.
c. Number of Rods Per Thoria Rod Canister:	$\leq$ 18
d. Decay Heat Per Thoria Rod Canister:	$\leq$ 115 Watts
e. Post-irradiation Fuel Cooling Time and Average Burnup Per Thoria Rod Canister:	A fuel post-irradiation cooling time $\geq$ 18 years and an average burnup $\leq$ 16,000 MWD/MTIHM.
f. Initial Heavy Metal Weight:	$\leq$ 27 kg/canister
g. Fuel Cladding O.D.:	$\geq$ 0.412 inches
h. Fuel Cladding I.D.:	$\leq$ 0.362 inches
i. Fuel Pellet O.D.:	$\leq$ 0.358 inches
j. Active Fuel Length:	$\leq$ 111 inches
k. Canister Weight:	$\leq$ 550 lbs, including fuel

Table 2.1-1 (page 10 of 39)
Fuel Assembly Limits

II. MPC MODEL: MPC-68 (continued)

B. Quantity per MPC:

1. Up to one (1) Dresden Unit 1 Thoria Rod Canister;

2. Up to 68 array/class 6x6A, 6x6B, 6x6C, 7x7A, or 8x8A DAMAGED FUEL ASSEMBLIES in DAMAGED FUEL CONTAINERS;

3. Up to sixteen (16) other BWR DAMAGED FUEL ASSEMBLIES in DAMAGED FUEL CONTAINERS in fuel storage locations 1, 2, 3, 8, 9, 16, 25, 34, 35, 44, 53, 60, 61, 66, 67, and/or 68; and/or

4. Any number of BWR INTACT FUEL ASSEMBLIES up to a total of 68.

C. Array/Class 10x10D and 10x10E fuel assemblies in stainless steel channels must be stored in fuel storage locations 19 - 22, 28 - 31, 38 -41, and/or 47 - 50.

D. Dresden Unit 1 fuel assemblies with one Antimony-Beryllium neutron source are authorized for loading in the MPC-68. The Antimony-Beryllium source material shall be in a water rod location.

E. FUEL DEBRIS is not authorized for loading in the MPC-68.

Table 2.1-1 (page 11 of 39)
Fuel Assembly Limits

III. MPC MODEL: MPC-68F

A. Allowable Contents

1. Uranium oxide, BWR INTACT FUEL ASSEMBLIES, with or without ZR channels. Uranium oxide BWR INTACT FUEL ASSEMBLIES shall meet the criteria specified in Table 2.1-3 for fuel assembly array class 6x6A, 6x6C, 7x7A or 8x8A, and meet the following specifications:

a. Cladding Type:	ZR
b Maximum PLANAR-AVERAGE INITIAL ENRICHMENT:	As specified in Table 2.1-3 for the applicable fuel assembly array/class.
c. Initial Maximum Rod Enrichment:	As specified in Table 2.1-3 for the applicable fuel assembly array/class.
d. Post-irradiation Cooling Time and Average Burnup Per Assembly:	Cooling time ≥ 18 years and an average burnup ≤ 30,000 MWD/MTU.
e. Decay Heat Per Assembly	≤ 115 Watts
f. Fuel Assembly Length:	≤ 135.0 inches (nominal design)
g. Fuel Assembly Width:	≤ 4.70 inches (nominal design)
h. Fuel Assembly Weight:	≤ 400 lbs, including channels

Table 2.1-1 (page 12 of 39)
Fuel Assembly Limits

III. MPC MODEL: MPC-68F (continued)

A. Allowable Contents (continued)

2. Uranium oxide, BWR DAMAGED FUEL ASSEMBLIES, with or without ZR channels, placed in DAMAGED FUEL CONTAINERS. Uranium oxide BWR DAMAGED FUEL ASSEMBLIES shall meet the criteria specified in Table 2.1-3 for fuel assembly array/class 6x6A, 6x6C, 7x7A, or 8x8A, and meet the following specifications:

a. Cladding Type:	ZR
b. Maximum PLANAR-AVERAGE INITIAL ENRICHMENT:	As specified in Table 2.1-3 for the applicable fuel assembly array/class.
c. Initial Maximum Rod Enrichment:	As specified in Table 2.1-3 for the applicable fuel assembly array/class.
d. Post-irradiation Cooling Time and Average Burnup Per Assembly:	Cooling time ≥ 18 years and an average burnup ≤ 30,000 MWD/MTU.
e. Decay Heat Per Assembly:	≤ 115 Watts
f. Fuel Assembly Length:	≤ 135.0 inches (nominal design)
g. Fuel Assembly Width:	≤ 4.70 inches (nominal design)
h. Fuel Assembly Weight:	≤ 550 lbs, including channels and DFC

Table 2.1-1 (page 13 of 39)
Fuel Assembly Limits

III. MPC MODEL: MPC-68F (continued)

A. Allowable Contents (continued)

3. Uranium oxide, BWR FUEL DEBRIS, with or without ZR channels, placed in DAMAGED FUEL CONTAINERS. The original fuel assemblies for the uranium oxide BWR FUEL DEBRIS shall meet the criteria specified in Table 2.1-3 for fuel assembly array/class 6x6A, 6x6C, 7x7A, or 8x8A, and meet the following specifications:

a. Cladding Type:	ZR
b. Maximum PLANAR-AVERAGE INITIAL ENRICHMENT:	As specified in Table 2.1-3 for the applicable original fuel assembly array/class.
c Initial Maximum Rod Enrichment:	As specified in Table 2.1-3 for the applicable original fuel assembly array/class.
d. Post-irradiation Cooling Time and Average Burnup Per Assembly	Cooling time $\geq$ 18 years and an average burnup $\leq$ 30,000 MWD/MTU for the original fuel assembly.
e. Decay Heat Per Assembly	$\leq$ 115 Watts
f. Original Fuel Assembly Length	$\leq$ 135.0 inches (nominal design)
g. Original Fuel Assembly Width	$\leq$ 4.70 inches (nominal design)
h. Fuel Debris Weight	$\leq$ 550 lbs, including channels and DFC

Table 2.1-1 (page 14 of 39)
Fuel Assembly Limits

III. MPC MODEL: MPC-68F (continued)

A. Allowable Contents (continued)

4. Mixed oxide (MOX), BWR INTACT FUEL ASSEMBLIES, with or without ZR channels. MOX BWR INTACT FUEL ASSEMBLIES shall meet the criteria specified in Table 2.1-3 for fuel assembly array/class 6x6B, and meet the following specifications:

a. Cladding Type:	ZR
b. Maximum PLANAR-AVERAGE INITIAL ENRICHMENT:	As specified in Table 2.1-3 for fuel assembly array/class 6x6B.
c. Initial Maximum Rod Enrichment:	As specified in Table 2.1-3 for fuel assembly array/class 6x6B.
d. Post-irradiation Cooling Time and Average Burnup Per Assembly:	Cooling time ≥ 18 years and an average burnup ≤ 30,000 MWD/MTIHM.
e. Decay Heat Per Assembly	≤ 115 Watts
f. Fuel Assembly Length:	≤ 135.0 inches (nominal design)
g. Fuel Assembly Width:	≤ 4.70 inches (nominal design)
h. Fuel Assembly Weight:	≤ 400 lbs, including channels

Table 2.1-1 (page 15 of 39)
Fuel Assembly Limits

III. MPC MODEL: MPC-68F (continued)

A. Allowable Contents (continued)

5. Mixed oxide (MOX), BWR DAMAGED FUEL ASSEMBLIES, with or without ZR channels, placed in DAMAGED FUEL CONTAINERS. MOX BWR DAMAGED FUEL ASSEMBLIES shall meet the criteria specified in Table 2.1-3 for fuel assembly array/class 6x6B, and meet the following specifications:

a. Cladding Type:	ZR
b. Maximum PLANAR-AVERAGE INITIAL ENRICHMENT:	As specified in Table 2.1-3 for fuel assembly array/class 6x6B.
c. Initial Maximum Rod Enrichment:	As specified in Table 2.1-3 for fuel assembly array/class 6x6B.
d. Post-irradiation Cooling Time and Average Burnup Per Assembly:	Cooling time ≥ 18 years and an average burnup ≤ 30,000 MWD/MTIHM.
e. Decay Heat Per Assembly	≤ 115 Watts
f. Fuel Assembly Length:	≤ 135.0 inches (nominal design)
g. Fuel Assembly Width:	≤ 4.70 inches (nominal design)
h. Fuel Assembly Weight:	≤ 550 lbs, including channels and DFC

Table 2.1-1 (page 16 of 39)
Fuel Assembly Limits

III. MPC MODEL: MPC-68F (continued)

A. Allowable Contents (continued)

6. Mixed Oxide (MOX), BWR FUEL DEBRIS, with or without ZR channels, placed in DAMAGED FUEL CONTAINERS. The original fuel assemblies for the MOX BWR FUEL DEBRIS shall meet the criteria specified in Table 2.1-3 for fuel assembly array/class 6x6B, and meet the following specifications:

a. Cladding Type:	ZR
b. Maximum PLANAR-AVERAGE INITIAL ENRICHMENT:	As specified in Table 2.1-3 for original fuel assembly array/class 6x6B.
c. Initial Maximum Rod Enrichment:	As specified in Table 2.1-3 for original fuel assembly array/class 6x6B.
d. Post-irradiation Cooling Time and Average Burnup Per Assembly:	Cooling time ≥ 18 years and an average burnup ≤ 30,000 MWD/MTIHM for the original fuel assembly.
e. Decay Heat Per Assembly	≤ 115 Watts
f. Original Fuel Assembly Length:	≤ 135.0 inches (nominal design)
g. Original Fuel Assembly Width:	≤ 4.70 inches (nominal design)
h. Fuel Debris Weight:	≤ 550 lbs, including channels and DFC

Table 2.1-1 (page 17 of 39)
Fuel Assembly Limits

III. MPC MODEL: MPC-68F (continued)

A. Allowable Contents (continued)

7. Thoria rods (ThO_2 and UO_2) placed in Dresden Unit 1 Thoria Rod Canisters and meeting the following specifications:

a. Cladding Type:	ZR
b. Composition:	98.2 wt.% ThO_2, 1.8 wt. % UO_2 with an enrichment of 93.5 wt. % ^{235}U.
c. Number of Rods Per Thoria Rod Canister:	$\leq$ 18
d. Decay Heat Per Thoria Rod Canister:	$\leq$ 115 Watts
e. Post-irradiation Fuel Cooling Time and Average Burnup Per Thoria Rod Canister:	A fuel post-irradiation cooling time $\geq$ 18 years and an average burnup $\leq$ 16,000 MWD/MTIHM.
f. Initial Heavy Metal Weight:	$\leq$ 27 kg/canister
g. Fuel Cladding O.D.:	$\geq$ 0.412 inches
h. Fuel Cladding I.D.:	$\leq$ 0.362 inches
i. Fuel Pellet O.D.:	$\leq$ 0.358 inches
j. Active Fuel Length:	$\leq$ 111 inches
k. Canister Weight:	$\leq$ 550 lbs, including fuel

Table 2.1-1 (page 18 of 39)
Fuel Assembly Limits

III. MPC MODEL: MPC-68F (continued)

B. Quantity per MPC (up to a total of 68 assemblies):
(All fuel assemblies must be array/class 6x6A, 6x6B, 6x6C, 7x7A, or 8x8A):

Up to four (4) DFCs containing uranium oxide BWR FUEL DEBRIS or MOX BWR FUEL DEBRIS. The remaining MPC-68F fuel storage locations may be filled with fuel assemblies of the following type, as applicable:

1. Uranium oxide BWR INTACT FUEL ASSEMBLIES;

2. MOX BWR INTACT FUEL ASSEMBLIES;

3. Uranium oxide BWR DAMAGED FUEL ASSEMBLIES placed in DFCs;

4. MOX BWR DAMAGED FUEL ASSEMBLIES placed in DFCs; or

5. Up to one (1) Dresden Unit 1 Thoria Rod Canister.

C. Fuel assemblies with stainless steel channels are not authorized for loading in the MPC-68F.

D. Dresden Unit 1 fuel assemblies with one Antimony-Beryllium neutron source are authorized for loading in the MPC-68F. The Antimony-Beryllium source material shall be in a water rod location.

Table 2.1-1 (page 19 of 39)
Fuel Assembly Limits

IV. MPC MODEL: MPC-24E

A. Allowable Contents

1. Uranium oxide, PWR INTACT FUEL ASSEMBLIES listed in Table 2.1-2, with or without NON-FUEL HARDWARE and meeting the following specifications (Note 1):

a. Cladding Type:	ZR or Stainless Steel (SS) as specified in Table 2.1-2 for the applicable fuel assembly array/class
b. Initial Enrichment:	As specified in Table 2.1-2 for the applicable fuel assembly array/class.
c. Post-irradiation Cooling Time and Average Burnup Per Assembly:	
i. Array/Classes 14x14D, 14x14E, and 15x15G	Cooling time ≥ 8 years and an average burnup ≤ 40,000 MWD/MTU.
ii. All Other Array/Classes	As specified in Section 2.4.
iii. NON-FUEL HARDWARE	As specified in Table 2.1-8.

Table 2.1-1 (page 20 of 39)
Fuel Assembly Limits

IV. MPC MODEL: MPC-24E (continued)

A. Allowable Contents (continued)

d. Decay Heat Per Assembly:	
i. Array/Classes 14x14D, 14x14E, and 15x15G	≤ 710 Watts.
ii. All other Array/Classes	As specified in Section 2.4.
e. Fuel Assembly Length:	≤ 176.8 inches (nominal design)
f. Fuel Assembly Width:	≤ 8.54 inches (nominal design)
g. Fuel Assembly Weight:	≤ 1,680 lbs (including NON-FUEL HARDWARE)

Table 2.1-1 (page 21 of 39)
Fuel Assembly Limits

IV. MPC MODEL: MPC-24E (continued)

A. Allowable Contents (continued)

2. Uranium oxide, PWR DAMAGED FUEL ASSEMBLIES, with or without NON-FUEL HARDWARE, placed in DAMAGED FUEL CONTAINERS. Uranium oxide PWR DAMAGED FUEL ASSEMBLIES shall meet the criteria specified in Table 2.1-2 and meet the following specifications (Note 1):

a. Cladding Type:	ZR or Stainless Steel (SS) as specified in Table 2.1-2 for the applicable fuel assembly array/class
b. Initial Enrichment:	As specified in Table 2.1-2 for the applicable fuel assembly array/class.
c. Post-irradiation Cooling Time and Average Burnup Per Assembly:	
i. Array/Classes 14x14D, 14x14E, and 15x15G	Cooling time ≥ 8 years and an average burnup ≤ 40,000 MWD/MTU.
ii. All Other Array/Classes	As specified in Section 2.4.
iii. NON-FUEL HARDWARE	As specified in Table 2.1-8.

Table 2.1-1 (page 22 of 39)
Fuel Assembly Limits

IV. MPC MODEL: MPC-24E (continued)

A. Allowable Contents (continued)

d. Decay Heat Per Assembly

i. Array/Classes 14x14D, 14x14E, and 15x15G	≤ 710 Watts.
ii. All Other Array/Classes	As specified in Section 2.4.
e. Fuel Assembly Length	≤ 176.8 inches (nominal design)
f. Fuel Assembly Width	≤ 8.54 inches (nominal design)
g. Fuel Assembly Weight	≤ 1,680 lbs (including NON-FUEL HARDWARE and DFC)

B. Quantity per MPC: Up to four (4) DAMAGED FUEL ASSEMBLIES in DAMAGED FUEL CONTAINERS, stored in fuel storage locations 3, 6, 19 and/or 22. The remaining MPC-24E fuel storage locations may be filled with PWR INTACT FUEL ASSEMBLIES meeting the applicable specifications.

C. Neutron sources and FUEL DEBRIS are not authorized for loading in the MPC-24E.

Note 1: Fuel assemblies containing BPRAs, TPDs, WABAs, water displacement guide tube plugs, orifice rod assemblies, or vibration supressor inserts may be stored in any fuel cell location. Fuel assemblies containing CRAs, RCCAs, CEAs, or APSRs may only be loaded in fuel storage locations 9, 10, 15, and/or 16. These requirements are in addition to any other requirements specified for uniform or regionalized fuel loading.

Table 2.1-1 (page 23 of 39)
Fuel Assembly Limits

V. MPC MODEL: MPC-32

A. Allowable Contents

1. Uranium oxide, PWR INTACT FUEL ASSEMBLIES listed in Table 2.1-2, with or without NON-FUEL HARDWARE and meeting the following specifications (Note 1):

a. Cladding Type:	ZR or Stainless Steel (SS) as specified in Table 2.1-2 for the applicable fuel assembly array/class
b. Initial Enrichment:	As specified in Table 2.1-2 for the applicable fuel assembly array/class.
c. Post-irradiation Cooling Time and Average Burnup Per Assembly	
i. Array/Classes 14x14D, 14x14E, and 15x15G	Cooling time ≥ 9 years and an average burnup ≤ 30,000 MWD/MTU or cooling time ≥ 20 years and an average burnup ≤ 40,000 MWD/MTU.
ii. All Other Array/Classes	As specified in Section 2.4.
iii. NON-FUEL HARDWARE	As specified in Table 2.1-8.

Table 2.1-1 (page 24 of 39)
Fuel Assembly Limits

V. MPC MODEL: MPC-32 (continued)

A. Allowable Contents (continued)

d. Decay Heat Per Assembly	
i. Array/Classes 14x14D, 14x14E, and 15x15G	≤ 500 Watts
ii. All Other Array/Classes	As specified in Section 2.4.
e. Fuel Assembly Length	≤ 176.8 inches (nominal design)
f. Fuel Assembly Width	≤ 8.54 inches (nominal design)
g. Fuel Assembly Weight	≤ 1,680 lbs (including NON-FUEL HARDWARE)

Table 2.1-1 (page 25 of 39)
Fuel Assembly Limits

V. MPC MODEL: MPC-32 (continued)

A. Allowable Contents (continued)

2. Uranium oxide, PWR DAMAGED FUEL ASSEMBLIES, with or without NON-FUEL HARDWARE, placed in DAMAGED FUEL CONTAINERS. Uranium oxide PWR DAMAGED FUEL ASSEMBLIES shall meet the criteria specified in Table 2.1-2 and meet the following specifications (Note 1):

a. Cladding Type:	ZR or Stainless Steel (SS) as specified in Table 2.1-2 for the applicable fuel assembly array/class
b. Initial Enrichment:	As specified in Table 2.1-2 for the applicable fuel assembly array/class.
c. Post-irradiation Cooling Time and Average Burnup Per Assembly:	
i. Array/Classes 14x14D, 14x14E, and 15x15G	Cooling time ≥ 8 years and an average burnup ≤ 40,000 MWD/MTU.
ii. All Other Array/Classes	As specified in Section 2.4.
iii. NON-FUEL HARDWARE	As specified in Table 2.1-8.

Table 2.1-1 (page 26 of 39)
Fuel Assembly Limits

V. MPC MODEL: MPC-32 (continued)

A. Allowable Contents (continued)

d. Decay Heat Per Assembly

i. Array/Classes 14x14D, 14x14E, and 15x15G	≤ 500 Watts.
ii. All Other Array/Classes	As specified in Section 2.4.
e. Fuel Assembly Length	≤ 176.8 inches (nominal design)
f. Fuel Assembly Width	≤ 8.54 inches (nominal design)
g. Fuel Assembly Weight	≤ 1,680 lbs (including NON-FUEL HARDWARE and DFC)

B. Quantity per MPC: Up to eight (8) DAMAGED FUEL ASSEMBLIES in DAMAGED FUEL CONTAINERS, stored in fuel storage locations 1, 4, 5, 10, 23, 28, 29, and/or 32. The remaining MPC-32 fuel storage locations may be filled with PWR INTACT FUEL ASSEMBLIES meeting the applicable specifications.

C. Neutron sources and FUEL DEBRIS are not authorized for loading in the MPC-32.

Note 1: Fuel assemblies containing BPRAs, TPDs, WABAs, water displacement guide tube plugs, orifice rod assemblies, or vibration suppressor inserts may be stored in any fuel cell location. Fuel assemblies containing CRAs, RCCAs, CEAs, or APSRs may only be loaded in fuel storage locations 13, 14, 19, and/or 20. These requirements are in addition to any other requirements specified for uniform or regionalized fuel loading.

Table 2.1-1 (page 27 of 39)
Fuel Assembly Limits

VI. MPC MODEL: MPC-68FF

A. Allowable Contents

1. Uranium oxide or MOX BWR INTACT FUEL ASSEMBLIES listed in Table 2.1-3, with or without channels and meeting the following specifications:

a. Cladding Type:	ZR or Stainless Steel (SS) as specified in Table 2.1-3 for the applicable fuel assembly array/class
b. Maximum PLANAR-AVERAGE INITIAL ENRICHMENT:	As specified in Table 2.1-3 for the applicable fuel assembly array/class.
c. Initial Maximum Rod Enrichment	As specified in Table 2.1-3 for the applicable fuel assembly array/class.
d. Post-irradiation Cooling Time and Average Burnup Per Assembly	
i. Array/Classes 6x6A, 6x6B, 6x6C, 7x7A, and 8x8A	Cooling time ≥ 18 years and an average burnup ≤ 30,000 MWD/MTU (or MTU/MTIHM).
ii. Array/Class 8x8F	Cooling time ≥ 10 years and an average burnup ≤ 27,500 MWD/MTU.
iii. Array/Classes 10x10D and 10x10E	Cooling time ≥ 10 years and an average burnup ≤ 22,500 MWD/MTU.
iv. All Other Array/Classes	As specified in Section 2.4.

Table 2.1-1 (page 28 of 39)
Fuel Assembly Limits

VI. MPC MODEL: MPC-68FF (continued)

A. Allowable Contents (continued)

e. Decay Heat Per Assembly

i. Array/Classes 6x6A, 6X6b, 6x6C, 7x7A, and 8x8A	≤ 115 Watts
ii. Array/Class 8x8F	≤ 183.5 Watts
iii. Array/Classes 10x10D and 10x10E	≤ 95 Watts
iv. All Other Array/Classes	As specified in Section 2.4.

f. Fuel Assembly Length

i. Array/Class 6x6A, 6x6B, 6x6C, 7x7A, or 8x8A	≤ 135.0 inches (nominal design)
ii. All Other Array/Classes	≤ 176.5 inches (nominal design)

g. Fuel Assembly Width

i. Array/Class 6x6A, 6x6B, 6x6C, 7x7A, or 8x8A	≤ 4.70 inches (nominal design)
ii. All Other Array/Classes	≤ 5.85 inches (nominal design)

h. Fuel Assembly Weight

i. Array/Class 6x6A, 6x6B, 6x6C, 7x7A, or 8x8A	≤ 550 lbs, including channels
ii. All Other Array/Classes	≤ 700 lbs, including channels

Table 2.1-1 (page 29 of 39)
Fuel Assembly Limits

VI. MPC MODEL: MPC-68FF (continued)

A. Allowable Contents (continued)

2. Uranium oxide or MOX BWR DAMAGED FUEL ASSEMBLIES or FUEL DEBRIS, with or without channels, placed in DAMAGED FUEL CONTAINERS. Uranium oxide and MOX BWR DAMAGED FUEL ASSEMBLIES and FUEL DEBRIS shall meet the criteria specified in Table 2.1-3, and meet the following specifications:

a. Cladding Type:	ZR or Stainless Steel (SS) in accordance with Table 2.1-3 for the applicable fuel assembly array/class.
b. Maximum PLANAR-AVERAGE INITIAL ENRICHMENT:	
i. Array/Classes 6x6A, 6x6B, 6x6C, 7x7A, and 8x8A.	As specified in Table 2.1-3 for the applicable fuel assembly array/class.
ii. All Other Array Classes	$\leq$ 4.0 wt.% ^{235}U.
c. Initial Maximum Rod Enrichment	As specified in Table 2.1-3 for the applicable fuel assembly array/class.
d. Post-irradiation Cooling Time and Average Burnup Per Assembly:	
i. Array/Class 6x6A, 6x6B, 6x6C, 7x7A, or 8x8A	Cooling time $\geq$ 18 years and an average burnup $\leq$ 30,000 MWD/MTU (or MWD/MTIHM).
ii. Array/Class 8x8F	Cooling time $\geq$ 10 years and an average burnup $\leq$ 27,500 MWD/MTU.
iii. Array/Class 10x10D and 10x10E	Cooling time $\geq$ 10 years and an average burnup $\leq$ 22,500 MWD/MTU.
iv. All Other Array/Classes	As specified in Section 2.4.

Table 2.1-1 (page 30 of 39)
Fuel Assembly Limits

VI. MPC MODEL: MPC-68FF (continued)

A. Allowable Contents (continued)

e. Decay Heat Per Assembly

i.	Array/Class 6x6A, 6x6B, 6x6C, 7x7A, or 8x8A	≤ 115 Watts
ii.	Array/Class 8x8F	≤ 183.5 Watts
iii.	Array/Classes 10x10D and 10x10E	≤ 95 Watts
iv.	All Other Array/Classes	As specified in Section 2.4.

f. Fuel Assembly Length

i.	Array/Class 6x6A, 6x6B, 6x6C, 7x7A, or 8x8A	≤ 135.0 inches (nominal design)
ii.	All Other Array/Classes	≤ 176.5 inches (nominal design)

g. Fuel Assembly Width

i.	Array/Class 6x6A, 6x6B, 6x6C, 7x7A, or 8x8A	≤ 4.70 inches (nominal design)
ii.	All Other Array/Classes	≤ 5.85 inches (nominal design)

h. Fuel Assembly Weight

i.	Array/Class 6x6A, 6x6B, 6x6C, 7x7A, or 8x8A	≤ 550 lbs, including channels and DFC
ii.	All Other Array/Classes	≤ 700 lbs, including channels and DFC

Table 2.1-1 (page 31 of 39)
Fuel Assembly limits

VI. MPC MODEL: MPC-68FF (continued)

B. Quantity per MPC (up to a total of 68 assemblies)

1. For fuel assembly array/classes 6x6A, 6X6B, 6x6C, 7x7A, or 8x8A, up to 68 BWR INTACT FUEL ASSEMBLIES and/or DAMAGED FUEL ASSEMBLIES. Up to eight (8) DFCs containing FUEL DEBRIS from these array/classes may be stored.

2. For all other array/classes, up to sixteen (16) DFCs containing BWR DAMAGED FUEL ASSEMBLIES and/or up to eight (8) DFCs containing FUEL DEBRIS. DFCs shall be located only in fuel storage locations 1, 2, 3, 8, 9, 16, 25, 34, 35, 44, 53, 60, 61, 66, 67, and/or 68. The remaining MPC-68FF fuel storage locations may be filled with fuel assemblies of the following type:

   i. Uranium Oxide BWR INTACT FUEL ASSEMBLIES; or

   ii. MOX BWR INTACT FUEL ASSEMBLIES.

C. Dresden Unit 1 fuel assemblies with one Antimony-Beryllium neutron source are authorized for loading in the MPC-68FF. The Antimony-Beryllium source material shall be in a water rod location.

D. Array/Class 10x10D and 10x10E fuel assemblies in stainless steel channels must be stored in fuel storage locations 19 - 22, 28 - 31, 38 -41, and/or 47 - 50.

Table 2.1-1 (page 32 of 39)
Fuel Assembly Limits

VII. MPC MODEL: MPC-24EF

A. Allowable Contents

1. Uranium oxide, PWR INTACT FUEL ASSEMBLIES listed in Table 2.1-2, with or without NON-FUEL HARDWARE and meeting the following specifications (Note 1):

a. Cladding Type:	ZR or Stainless Steel (SS) as specified in Table 2.1-2 for the applicable fuel assembly array/class
b. Initial Enrichment:	As specified in Table 2.1-2 for the applicable fuel assembly array/class.
c. Post-irradiation Cooling Time and Average Burnup Per Assembly:	
i. Array/Classes 14x14D, 14x14E, and 15x15G	Cooling time ≥ 8 years and an average burnup ≤ 40,000 MWD/MTU.
ii. All Other Array/Classes	As specified in Section 2.4.
iii. NON-FUEL HARDWARE	As specified in Table 2.1-8.

Table 2.1-1 (page 33 of 39)
Fuel Assembly Limits

VII. MPC MODEL: MPC-24EF (continued)

A. Allowable Contents (continued)

d. Decay Heat Per Assembly:	
i. Array/Classes 14x14D, 14x14E, and 15x15G	≤ 710 Watts.
ii. All other Array/Classes	As specified in Section 2.4.
e. Fuel Assembly Length:	≤ 176.8 inches (nominal design)
f. Fuel Assembly Width:	≤ 8.54 inches (nominal design)
g. Fuel Assembly Weight:	≤ 1,680 lbs (including NON-FUEL HARDWARE)

Table 2.1-1 (page 34 of 39)
Fuel Assembly Limits

VII. MPC MODEL: MPC-24EF (continued)

A. Allowable Contents (continued)

2. Uranium oxide, PWR DAMAGED FUEL ASSEMBLIES and FUEL DEBRIS, with or without NON-FUEL HARDWARE, placed in DAMAGED FUEL CONTAINERS. Uranium oxide PWR DAMAGED FUEL ASSEMBLIES and FUEL DEBRIS shall meet the criteria specified in Table 2.1-2 and meet the following specifications (Note 1):

a. Cladding Type:	ZR or Stainless Steel (SS) as specified in Table 2.1-2 for the applicable fuel assembly array/class
b. Initial Enrichment:	As specified in Table 2.1-2 for the applicable fuel assembly array/class.
c. Post-irradiation Cooling Time and Average Burnup Per Assembly:	
i. Array/Classes 14x14D, 14x14E, and 15x15G	Cooling time ≥ 8 years and an average burnup ≤ 40,000 MWD/MTU.
ii. All Other Array/Classes	As specified in Section 2.4.
iii. NON-FUEL HARDWARE	As specified in Table 2.1-8.

Table 2.1-1 (page 35 of 39)
Fuel Assembly Limits

VII. MPC MODEL: MPC-24EF (continued)

A. Allowable Contents (continued)

d. Decay Heat Per Assembly

i. Array/Classes 14x14D, 14x14E, and 15x15G	≤ 710 Watts.
ii. All Other Array/Classes	As specified in Section 2.4.
e. Fuel Assembly Length	≤ 176.8 inches (nominal design)
f. Fuel Assembly Width	≤ 8.54 inches (nominal design)
g. Fuel Assembly Weight	≤ 1,680 lbs (including NON-FUEL HARDWARE and DFC)

B. Quantity per MPC: Up to four (4) DAMAGED FUEL ASSEMBLIES and/or FUEL DEBRIS in DAMAGED FUEL CONTAINERS, stored in fuel storage locations 3, 6, 19 and/or 22. The remaining MPC-24EF fuel storage locations may be filled with PWR INTACT FUEL ASSEMBLIES meeting the applicable specifications.

C. Neutron sources are not permitted for loading in the MPC-24EF.

Note 1: Fuel assemblies containing BPRAs, TPDs, WABAs, water displacement guide tube plugs, orifice rod assemblies, or vibration suppressor inserts may be stored in any fuel cell location. Fuel assemblies containing CRAs, RCCAs, CEAs, or APSRs may only be loaded in fuel storage locations 9, 10, 15, and/or 16. These requirements are in addition to any other requirements specified for uniform or regionalized fuel loading.

Table 2.1-1 (page 36 of 39)
Fuel Assembly Limits

VIII. MPC MODEL: MPC-32F

A. Allowable Contents

1. Uranium oxide, PWR INTACT FUEL ASSEMBLIES listed in Table 2.1-2, with or without NON-FUEL HARDWARE and meeting the following specifications (Note 1):

a. Cladding Type:	ZR or Stainless Steel (SS) as specified in Table 2.1-2 for the applicable fuel assembly array/class
b. Initial Enrichment:	As specified in Table 2.1-2 for the applicable fuel assembly array/class.
c. Post-irradiation Cooling Time and Average Burnup Per Assembly:	
i. Array/Classes 14x14D, 14x14E, and 15x15G	Cooling time ≥ 8 years and an average burnup ≤ 40,000 MWD/MTU.
ii. All Other Array/Classes	As specified in Section 2.4.
iii. NON-FUEL HARDWARE	As specified in Table 2.1-8.

Table 2.1-1 (page 37 of 39)
Fuel Assembly Limits

VIII. MPC MODEL: MPC-32F (cont'd)

A. Allowable Contents (cont'd)

d. Decay Heat Per Assembly	
i. Array/Classes 14x14D, 14x14E, and 15x15G	≤ 500 Watts.
ii. All Other Array/Classes	As specified in Section 2.4.
e. Fuel Assembly Length	≤ 176.8 inches (nominal design)
f. Fuel Assembly Width	≤ 8.54 inches (nominal design)
g. Fuel Assembly Weight	≤ 1,680 lbs (including NON-FUEL HARDWARE)

Table 2.1-1 (page 38 of 39)
Fuel Assembly Limits

VIII. MPC MODEL: MPC-32F (cont'd)

A. Allowable Contents (cont'd)

2. Uranium oxide, PWR DAMAGED FUEL ASSEMBLIES and FUEL DEBRIS, with or without NON-FUEL HARDWARE, placed in DAMAGED FUEL CONTAINERS. Uranium oxide PWR DAMAGED FUEL ASSEMBLIES and FUEL DEBRIS shall meet the criteria specified in Table 2.1-2 and meet the following specifications (Note 1):

a. Cladding Type:	ZR or Stainless Steel (SS) as specified in Table 2.1-2 for the applicable fuel assembly array/class
b. Initial Enrichment:	As specified in Table 2.1-2 for the applicable fuel assembly array/class.
c. Post-irradiation Cooling Time and Average Burnup Per Assembly:	
i. Array/Classes 14x14D, 14x14E, and 15x15G	Cooling time ≥ 8 years and an average burnup ≤ 40,000 MWD/MTU.
ii. All Other Array/Classes	As specified in Section 2.4.
iii. NON-FUEL HARDWARE	As specified in Table 2.1-8.

Table 2.1-1 (page 39 of 39)
Fuel Assembly Limits

VIII. MPC MODEL: MPC-32F (cont'd)

A. Allowable Contents (cont'd)

d. Decay Heat Per Assembly

i. Array/Classes 14x14D, 14x14E, and 15x15G	≤ 500 Watts.
ii. All Other Array/Classes	As specified in Section 2.3.
e. Fuel Assembly Length	≤ 176.8 inches (nominal design)
f. Fuel Assembly Width	≤ 8.54 inches (nominal design)
g. Fuel Assembly Weight	≤ 1,680 lbs (including NON-FUEL HARDWARE and DFC)

B. Quantity per MPC: Up to eight (8) DAMAGED FUEL ASSEMBLIES and/or FUEL DEBRIS in DAMAGED FUEL CONTAINERS, stored in fuel storage locations 1, 4, 5, 10, 23, 28, 29, and/or 32. The remaining MPC-32F fuel storage locations may be filled with PWR INTACT FUEL ASSEMBLIES meeting the applicable specifications.

C. Neutron sources are not permitted for loading in the MPC-32F.

Note 1: Fuel assemblies containing BPRAs, TPDs, WABAs, water displacement guide tube plugs, orifice rod assemblies, or vibration suppressor inserts may be stored in any fuel cell location. Fuel assemblies containing CRAs, RCCAs, CEAs, or APSRs may only be loaded in fuel storage locations 13, 14, 19 and/or 20. These requirements are in addition to any other requirements specified for uniform or regionalized fuel loading.

Table 2.1-2 (page 1 of 4)
PWR FUEL ASSEMBLY CHARACTERISTICS (Note 1)

Fuel Assembly Array/Class	14x14A	14x14B	14x14C	14x14D	14x14E
Clad Material	ZR	ZR	ZR	SS	SS
Design Initial U (kg/assy.) (Note 3)	≤ 365	≤ 412	≤ 438	≤ 400	≤ 206
Initial Enrichment (MPC-24, 24E and 24EF without soluble boron credit) (wt % ^{235}U) (Note 7)	≤ 4.6 (24) ≤ 5.0 (24E/24EF)	≤ 4.6 (24) ≤ 5.0 (24E/24EF)	≤ 4.6 (24) ≤ 5.0 (24E/24EF)	≤ 4.0 (24) ≤ 5.0 (24E/24EF)	≤ 5.0 (24) ≤ 5.0 (24E/24EF)
Initial Enrichment (MPC-24, 24E, 24EF, 32, or 32F with soluble boron credit - see Note 5) (wt % ^{235}U)	≤ 5.0	≤ 5.0	≤ 5.0	≤ 5.0	≤ 5.0
No. of Fuel Rod Locations	179	179	176	180	173
Fuel Rod Clad O.D. (in.)	≥ 0.400	≥ 0.417	≥ 0.440	≥ 0.422	≥ 0.3415
Fuel Rod Clad I.D. (in.)	≤ 0.3514	≤ 0.3734	≤ 0.3880	≤ 0.3890	≤ 0.3175
Fuel Pellet Dia. (in.)	≤ 0.3444	≤ 0.3659	≤ 0.3805	≤ 0.3835	≤ 0.3130
Fuel Rod Pitch (in.)	≤ 0.556	≤ 0.556	≤ 0.580	≤ 0.556	Note 6
Active Fuel Length (in.)	≤ 150	≤ 150	≤ 150	≤ 144	≤ 102
No. of Guide and/or Instrument Tubes	17	17	5 (Note 4)	16	0
Guide/Instrument Tube Thickness (in.)	≥ 0.017	≥ 0.017	≥ 0.038	≥ 0.0145	N/A

Table 2.1-2 (page 2 of 4)
PWR FUEL ASSEMBLY CHARACTERISTICS (Note 1)

Fuel Assembly Array/Class	15x15A	15x15B	15x15C	15x15D	15x15E	15x15F
Clad Material	ZR	ZR	ZR	ZR	ZR	ZR
Design Initial U (kg/assy.) (Note 3)	≤ 473	≤ 473	≤ 473	≤ 495	≤ 495	≤ 495
Initial Enrichment (MPC-24, 24E and 24EF without soluble boron credit) (wt % ^{235}U) (Note 7)	≤ 4.1 (24) ≤ 4.5 (24E/24EF)	≤ 4.1 (24) ≤ 4.5 (24E/24EF)	≤ 4.1 (24) ≤ 4.5 (24E/24EF)	≤ 4.1 (24) ≤ 4.5 (24E/24EF)	≤ 4.1 (24) ≤ 4.5 (24E/24EF)	≤ 4.1 (24) ≤ 4.5 (24E/24EF)
Initial Enrichment (MPC-24, 24E, 24EF, 32, or 32F with soluble boron credit - see Note 5) (wt % ^{235}U)	≤ 5.0	≤ 5.0	≤ 5.0	≤ 5.0	≤ 5.0	≤ 5.0
No. of Fuel Rod Locations	204	204	204	208	208	208
Fuel Rod Clad O.D. (in.)	≥ 0.418	≥ 0.420	≥ 0.417	≥ 0.430	≥ 0.428	≥ 0.428
Fuel Rod Clad I.D. (in.)	≤ 0.3660	≤ 0.3736	≤ 0.3640	≤ 0.3800	≤ 0.3790	≤ 0.3820
Fuel Pellet Dia. (in.)	≤ 0.3580	≤ 0.3671	≤ 0.3570	≤ 0.3735	≤ 0.3707	≤ 0.3742
Fuel Rod Pitch (in.)	≤ 0.550	≤ 0.563	≤ 0.563	≤ 0.568	≤ 0.568	≤ 0.568
Active Fuel Length (in.)	≤ 150	≤ 150	≤ 150	≤ 150	≤ 150	≤ 150
No. of Guide and/or Instrument Tubes	21	21	21	17	17	17
Guide/Instrument Tube Thickness (in.)	≥ 0.0165	≥ 0.015	≥ 0.0165	≥ 0.0150	≥ 0.0140	≥ 0.0140

Table 2.1-2 (page 3 of 4)
PWR FUEL ASSEMBLY CHARACTERISTICS (Note 1)

Fuel Assembly Array/ Class	15x15G	15x15H	16x16A	17x17A	17x17B	17x17C
Clad Material	SS	ZR	ZR	ZR	ZR	ZR
Design Initial U (kg/assy.) (Note 3)	≤ 420	≤ 495	≤ 448	≤ 433	≤ 474	≤ 480
Initial Enrichment (MPC-24, 24E, and 24EF without soluble boron credit) (wt % ^{235}U) (Note 7)	≤ 4.0 (24) ≤ 4.5 (24E/24EF)	≤ 3.8 (24) ≤ 4.2 (24E/24EF)	≤ 4.6 (24) ≤ 5.0 (24E/24EF)	≤ 4.0 (24) ≤ 4.4 (24E/24EF)	≤ 4.0 (24) ≤ 4.4 (24E/24EF)	≤ 4.0 (24) ≤ 4.4 (24E/24EF)
Initial Enrichment (MPC-24, 24E, 24EF, 32, or 32F with soluble boron credit - see Note 5) (wt % ^{235}U)	≤ 5.0	≤ 5.0	≤ 5.0	≤ 5.0	≤ 5.0	≤ 5.0
No. of Fuel Rod Locations	204	208	236	264	264	264
Fuel Rod Clad O.D. (in.)	≥ 0.422	≥ 0.414	≥ 0.382	≥ 0.360	≥ 0.372	≥ 0.377
Fuel Rod Clad I.D. (in.)	≤ 0.3890	≤ 0.3700	≤ 0.3320	≤ 0.3150	≤ 0.3310	≤ 0.3330
Fuel Pellet Dia. (in.)	≤ 0.3825	≤ 0.3622	≤ 0.3255	≤ 0.3088	≤ 0.3232	≤ 0.3252
Fuel Rod Pitch (in.)	≤ 0.563	≤ 0.568	≤ 0.506	≤ 0.496	≤ 0.496	≤ 0.502
Active Fuel Length (in.)	≤ 144	≤ 150	≤ 150	≤ 150	≤ 150	≤ 150
No. of Guide and/or Instrument Tubes	21	17	5 (Note 4)	25	25	25
Guide/Instrument Tube Thickness (in.)	≥ 0.0145	≥ 0.0140	≥ 0.0400	≥ 0.016	≥ 0.014	≥ 0.020

Table 2.1-2 (page 4 of 4)
PWR FUEL ASSEMBLY CHARACTERISTICS

Notes:

1. All dimensions are design nominal values. Maximum and minimum dimensions are specified to bound variations in design nominal values among fuel assemblies within a given array/class.

2. Deleted.

3. Design initial uranium weight is the nominal uranium weight specified for each assembly by the fuel manufacturer or reactor user. For each PWR fuel assembly, the total uranium weight limit specified in this table may be increased up to 2.0 percent for comparison with users' fuel records to account for manufacturer's tolerances.

4. Each guide tube replaces four fuel rods.

5. Soluble boron concentration per LCO 3.3.1.

6. This fuel assembly array/class includes only the Indian Point Unit 1 fuel assembly. This fuel assembly has two pitches in different sectors of the assembly. These pitches are 0.441 inches and 0.453 inches.

7. For those MPCs loaded with both INTACT FUEL ASSEMBLIES and DAMAGED FUEL ASSEMBLIES or FUEL DEBRIS, the maximum initial enrichment of the INTACT FUEL ASSEMBLIES, DAMAGED FUEL ASSEMBLIES and FUEL DEBRIS is 4.0 wt.% ^{235}U.

Table 2.1-3 (page 1 of 5)
BWR FUEL ASSEMBLY CHARACTERISTICS (Note 1)

Fuel Assembly Array/Class	6x6A	6x6B	6x6C	7x7A	7x7B	8x8A
Clad Material	ZR	ZR	ZR	ZR	ZR	ZR
Design Initial U (kg/assy.) (Note 3)	≤ 110	≤ 110	≤ 110	≤ 100	≤ 198	≤ 120
Maximum PLANAR-AVERAGE INITIAL ENRICHMENT (wt.% ^{235}U) (Note 14)	≤ 2.7	≤ 2.7 for the UO_2 rods. See Note 4 for MOX rods	≤ 2.7	≤ 2.7	≤ 4.2	≤ 2.7
Initial Maximum Rod Enrichment (wt.% ^{235}U)	≤ 4.0	≤ 4.0	≤ 4.0	≤ 5.5	≤ 5.0	≤ 4.0
No. of Fuel Rod Locations	35 or 36	35 or 36 (up to 9 MOX rods)	36	49	49	63 or 64
Fuel Rod Clad O.D. (in.)	≥ 0.5550	≥ 0.5625	≥ 0.5630	≥ 0.4860	≥ 0.5630	≥ 0.4120
Fuel Rod Clad I.D. (in.)	≤ 0.5105	≤ 0.4945	≤ 0.4990	≤ 0.4204	≤ 0.4990	≤ 0.3620
Fuel Pellet Dia. (in.)	≤ 0.4980	≤ 0.4820	≤ 0.4880	≤ 0.4110	≤ 0.4910	≤ 0.3580
Fuel Rod Pitch (in.)	≤ 0.710	≤ 0.710	≤ 0.740	≤ 0.631	≤ 0.738	≤ 0.523
Active Fuel Length (in.)	≤ 120	≤ 120	≤ 77.5	≤ 80	≤ 150	≤ 120
No. of Water Rods (Note 11)	1 or 0	1 or 0	0	0	0	1 or 0
Water Rod Thickness (in.)	> 0	> 0	N/A	N/A	N/A	≥ 0
Channel Thickness (in.)	≤ 0.060	≤ 0.060	≤ 0.060	≤ 0.060	≤ 0.120	≤ 0.100

Table 2.1-3 (2 of 5)
BWR FUEL ASSEMBLY CHARACTERISTICS (Note 1)

Fuel Assembly Array/Class	8x8B	8x8C	8x8D	8x8E	8x8F	9x9A
Clad Material	ZR	ZR	ZR	ZR	ZR	ZR
Design Initial U (kg/assy.) (Note 3)	≤ 152	≤ 190	≤ 190	< 190	≤ 191	≤ 180
Maximum PLANAR-AVERAGE INITIAL ENRICHMENT (wt.% ^{235}U) (Note 14)	≤ 4.2	≤ 4.2	≤ 4.2	≤ 4.2	≤ 4.0	≤ 4.2
Initial Maximum Rod Enrichment (wt.% ^{235}U)	≤ 5.0	≤ 5.0	≤ 5.0	≤ 5.0	≤ 5.0	≤ 5.0
No. of Fuel Rod Locations	63 or 64	62	60 or 61	59	64	74/66 (Note 5)
Fuel Rod Clad O.D. (in.)	≥ 0.4840	≥ 0.4830	≥ 0.4830	≥ 0.4930	≥ 0.4576	≥ 0.4400
Fuel Rod Clad I.D. (in.)	≤ 0.4295	≤ 0.4250	≤ 0.4230	≤ 0.4250	≤ 0.3996	≤ 0.3840
Fuel Pellet Dia. (in.)	≤ 0.4195	≤ 0.4160	≤ 0.4140	≤ 0.4160	≤ 0.3913	≤ 0.3760
Fuel Rod Pitch (in.)	≤ 0.642	≤ 0.641	≤ 0.640	≤ 0.640	≤ 0.609	≤ 0.566
Design Active Fuel Length (in.)	≤ 150	≤ 150	≤ 150	≤ 150	≤ 150	≤ 150
No. of Water Rods (Note 11)	1 or 0	2	1 - 4 (Note 7)	5	N/A (Note 12)	2
Water Rod Thickness (in.)	≥ 0.034	> 0.00	> 0.00	≥ 0.034	≥ 0.0315	> 0.00
Channel Thickness (in.)	≤ 0.120	≤ 0.120	≤ 0.120	≤ 0.100	≤ 0.055	≤ 0.120

Table 2.1-3 (page 3 of 5)
BWR FUEL ASSEMBLY CHARACTERISTICS (Note 1)

Fuel Assembly Array/Class	9x9B	9x9C	9x9D	9x9E (Note 13)	9x9F (Note 13)	9x9G
Clad Material	ZR	ZR	ZR	ZR	ZR	ZR
Design Initial U (kg/assy.) (Note 3)	≤ 180	≤ 182	≤ 182	≤ 183	≤ 183	≤ 164
Maximum PLANAR-AVERAGE INITIAL ENRICHMENT (wt.% ^{235}U) (Note 14)	≤ 4.2	≤ 4.2	≤ 4.2	≤ 4.0	≤ 4.0	≤ 4.2
Initial Maximum Rod Enrichment (wt.% ^{235}U)	≤ 5.0	≤ 5.0	≤ 5.0	≤ 5.0	≤ 5.0	≤ 5.0
No. of Fuel Rod Locations	72	80	79	76	76	72
Fuel Rod Clad O.D. (in.)	≥ 0.4330	≥ 0.4230	≥ 0.4240	≥ 0.4170	≥ 0.4430	≥ 0.4240
Fuel Rod Clad I.D. (in.)	≤ 0.3810	≤ 0.3640	≤ 0.3640	≤ 0.3640	≤ 0.3860	≤ 0.3640
Fuel Pellet Dia. (in.)	≤ 0.3740	≤ 0.3565	≤ 0.3565	≤ 0.3530	≤ 0.3745	≤ 0.3565
Fuel Rod Pitch (in.)	≤ 0.572	≤ 0.572	≤ 0.572	≤ 0.572	≤ 0.572	≤ 0.572
Design Active Fuel Length (in.)	≤ 150	≤ 150	≤ 150	≤ 150	≤ 150	≤ 150
No. of Water Rods (Note 11)	1 (Note 6)	1	2	5	5	1 (Note 6)
Water Rod Thickness (in.)	> 0.00	≥ 0.020	≥ 0.0300	≥ 0.0120	≥ 0.0120	≥ 0.0320
Channel Thickness (in.)	≤ 0.120	≤ 0.100	≤ 0.100	≤ 0.120	≤ 0.120	≤ 0.120

Table 2.1-3 (page 4 of 5)
BWR FUEL ASSEMBLY CHARACTERISTICS (Note 1)

Fuel Assembly Array/Class	10x10A	10x10B	10x10C	10x10D	10x10E
Clad Material	ZR	ZR	ZR	SS	SS
Design Initial U (kg/assy.) (Note 3)	≤ 188	≤ 188	≤ 179	≤ 125	≤ 125
Maximum PLANAR-AVERAGE INITIAL ENRICHMENT (wt.% ^{235}U) (Note 14)	≤ 4.2	≤ 4.2	≤ 4.2	≤ 4.0	≤ 4.0
Initial Maximum Rod Enrichment (wt.% ^{235}U)	≤ 5.0	≤ 5.0	≤ 5.0	≤ 5.0	≤ 5.0
No. of Fuel Rod Locations	92/78 (Note 8)	91/83 (Note 9)	96	100	96
Fuel Rod Clad O.D. (in.)	≥ 0.4040	≥ 0.3957	≥ 0.3780	≥ 0.3960	≥ 0.3940
Fuel Rod Clad I.D. (in.)	≤ 0.3520	≤ 0.3480	≤ 0.3294	≤ 0.3560	≤ 0.3500
Fuel Pellet Dia. (in.)	≤ 0.3455	≤ 0.3420	≤ 0.3224	≤ 0.3500	≤ 0.3430
Fuel Rod Pitch (in.)	≤ 0.510	≤ 0.510	≤ 0.488	≤ 0.565	≤ 0.557
Design Active Fuel Length (in.)	≤ 150	≤ 150	≤ 150	≤ 83	≤ 83
No. of Water Rods (Note 11)	2	1 (Note 6)	5 (Note 10)	0	4
Water Rod Thickness (in.)	≥ 0.0300	> 0.00	≥ 0.031	N/A	≥ 0.022
Channel Thickness (in.)	≤ 0.120	≤ 0.120	≤ 0.055	≤ 0.080	≤ 0.080

Table 2.1-3 (page 5 of 5)
BWR FUEL ASSEMBLY CHARACTERISTICS

Notes:

1. All dimensions are design nominal values. Maximum and minimum dimensions are specified to bound variations in design nominal values among fuel assemblies within a given array/class.

2. Deleted.

3. Design initial uranium weight is the nominal uranium weight specified for each assembly by the fuel manufacturer or reactor user. For each BWR fuel assembly, the total uranium weight limit specified in this table may be increased up to 1.5 percent for comparison with users' fuel records to account for manufacturer tolerances.

4. $\leq$ 0.635 wt. % ^{235}U and $\leq$ 1.578 wt. % total fissile plutonium (^{239}Pu and ^{241}Pu), (wt. % of total fuel weight, i.e., UO_2 plus PuO_2).

5. This assembly class contains 74 total rods; 66 full length rods and 8 partial length rods.

6. Square, replacing nine fuel rods.

7. Variable.

8. This assembly contains 92 total fuel rods; 78 full length rods and 14 partial length rods.

9. This assembly class contains 91 total fuel rods; 83 full length rods and 8 partial length rods.

10. One diamond-shaped water rod replacing the four center fuel rods and four rectangular water rods dividing the assembly into four quadrants.

11. These rods may also be sealed at both ends and contain Zr material in lieu of water.

12. This assembly is known as "QUAD+." It has four rectangular water cross segments dividing the assembly into four quadrants.

13. For the SPC 9x9-5 fuel assembly, each fuel rod must meet either the 9x9E or the 9x9F set of limits for clad O.D., clad I.D., and pellet diameter.

14. For those MPCs loaded with both INTACT FUEL ASSEMBLIES and DAMAGED FUEL ASSEMBLIES or FUEL DEBRIS, the maximum PLANAR AVERAGE INITIAL ENRICHMENT for the INTACT FUEL ASSEMBLIES is limited to 3.7 wt.% ^{235}U, as applicable.

Table 2.1-4

TABLE DELETED

Table 2.1-5

TABLE DELETED

Table 2.1-6 (page 1 of 2)

TABLE DELETED

Table 2.1-6 (page 2 of 2)

TABLE DELETED

Table 2.1-7 (page 1 of 2)

TABLE DELETED

Table 2.1-7 (page 2 of 2)

TABLE DELETED

Table 2.1-8
NON-FUEL HARDWARE COOLING AND AVERAGE BURNUP (Notes 1, 2, and 3)

Post-Irradiation Cooling Time (years)	INSERTS (Note 4) BURNUP (MWD/MTU)	GUIDE TUBE HARDWARE (Note 5) BURNUP (MWD/MTU)	CONTROL COMPONENT (Note 6) BURNUP (MWD/MTU)	APSR BURNUP (MWD/MTU)
≥ 3	≤ 24,635	NA (Note 7)	NA	NA
≥ 4	≤ 30,000	≤ 20,000	NA	NA
≥ 5	≤ 36,748	≤ 25,000	≤ 630,000	≤ 45,000
≥ 6	≤ 44,102	≤ 30,000	-	≤ 54,500
≥ 7	≤ 52,900	≤ 40,000	-	≤ 68,000
≥ 8	≤ 60,000	≤ 45,000	-	≤ 83,000
≥ 9	-	≤ 50,000	-	≤ 111,000
≥ 10	-	≤ 60,000	-	≤ 180,000
≥ 11	-	≤ 75,000	-	≤ 630,000
≥ 12	-	≤ 90,000	-	-
≥ 13	-	≤ 180,000	-	-
≥ 14	-	≤ 630,000	-	-

Notes:
1. Burnups for NON-FUEL HARDWARE are to be determined based on the burnup and uranium mass of the fuel assemblies in which the component was inserted during reactor operation.
2. Linear interpolation between points is permitted, except that TPD and APSR burnups > 180,000 MWD/MTU and ≤ 630,000 MWD/MTU must be cooled ≥ 14 years and ≥ 11 years, respectively.
3. Applicable to uniform loading and regionalized loading.
4. Includes Burnable Poison Rod Assemblies (BPRAs), Wet Annular Burnable Absorbers (WABAs), and vibration suppressor inserts..
5. Includes Thimble Plug Devices (TPDs), water displacement guide tube plugs, and orifice rod assemblies.
6. Includes Control Rod Assemblies (CRAs), Control Element Assemblies (CEAs), and Rod Cluster Control Assemblies (RCCAs).
7. NA means not authorized for loading at this cooling time.

2.4 Decay Heat, Burnup, and Cooling Time Limits for ZR-Clad Fuel

This section provides the limits on ZR-clad fuel assembly decay heat, burnup, and cooling time for storage in the HI-STORM 100 System. A detailed discussion of how to calculate the limits and verify compliance, including examples, is provided in Chapter 12 of the HI-STORM 100 FSAR.

2.4.1 Uniform Fuel Loading Decay Heat Limits for ZR-Clad Fuel

Table 2.4-1 provides the maximum allowable decay heat per ZR-clad fuel assembly for uniform fuel loading for each MPC model.

Table 2.4-1

Maximum Allowable Decay Heat per Fuel Assembly
(Uniform Loading, ZR-Clad)

MPC Model	Decay Heat per Fuel Assembly (kW)
MPC-24/24E/24EF	≤ 1.583
MPC-32/32F	≤ 1.1875
MPC-68/68FF	≤ 0.522

2.4.2 Regionalized Fuel Loading Decay Heat Limits for ZR-Clad Fuel

The allowable maximum decay heat per ZR-clad fuel assembly for regionalized fuel loading shall be calculated as follows. Fuel loading regions for each MPC model are shown in Figures 2.1-1 through 2.1-4. The number of fuel storage locations in each region and the maximum total decay heat per MPC model is provided in Table 2.4-2.

Table 2.4-2

MPC Fuel Storage Regions and Maximum Decay Heat

MPC Model	Number of Fuel Storage Locations in Region 1 ($N_{Region\ 1}$)	Number of Fuel Storage Locations in Region 2 ($N_{Region\ 2}$)	Maximum Decay Heat per MPC, Q (kW)
MPC-24/24E/24EF	4	20	38
MPC-32/32F	12	20	38
MPC-68/68FF	32	36	35.5

2.4.2 Regionalized Fuel Loading Decay Heat Limits for ZR-Clad Fuel (cont'd)

2.4.2.1 Choose a value of X between 1 and 6, where X is the ratio of the maximum decay heat per fuel assembly permitted in Region 1 ($q_{Region\ 1}$) to the maximum decay heat per fuel assembly permitted in Region 2 ($q_{Region\ 2}$).

2.4.2.2 Calculate $q_{Region\ 2}$ using the following equation:

$$q_{Region\ 2} = (2 \times Q)/[(1 + X^{0.15}) \times (N_{Region\ 1} \times X + N_{Region\ 2})] \qquad \text{Equation. 2.4.1}$$

Where:

$q_{Region\ 2}$ = Maximum allowable decay heat per fuel assembly in Region 2 (kW)

Q = Maximum allowable heat load for the MPC model from Table 2.4-2 (kW)

X = Ratio of $q_{Region\ 1}$ to $q_{Region\ 2}$ chosen in Step 2.4.2.1

$N_{Region\ 1}$ = Number of fuel storage locations in Region 1 from Table 2.4-2

$N_{Region\ 2}$ = Number of fuel storage locations in Region 2 from Table 2.4-2

2.4.2.3 Calculate $q_{Region\ 1}$ using the following equation:

$$q_{Region\ 1} = X \times q_{Region\ 2} \qquad \text{Equation 2.4.2}$$

Where:

$q_{Region\ 1}$ = Maximum allowable decay heat per fuel assembly in Region 1 (kW)

$q_{Region\ 2}$ = Maximum allowable decay heat per fuel assembly in Region 2 calculated in Step 2.4.2.2 (kW)

X = Ratio of $q_{Region\ 1}$ to $q_{Region\ 2}$ chosen in Step 2.4.2.1

2.4.3 Burnup Limits as a Function of Cooling Time for ZR-Clad Fuel

The maximum allowable ZR-clad fuel assembly average burnup varies with the following parameters:

- Minimum fuel assembly cooling time
- Maximum fuel assembly decay heat
- Minimum fuel assembly average enrichment

2.4.3 Burnup Limits as a Function of Cooling Time for ZR-Clad Fuel (cont'd)

The maximum allowable ZR-clad fuel assembly average burnup for a given MINIMUM ENRICHMENT is calculated as described below for minimum cooling times between 3 and 20 years using the maximum permissible decay heat determined in Section 2.4.1 or 2.4.2. Different fuel assembly average burnup limits may be calculated for different minimum enrichments (by individual fuel assembly) for use in choosing the fuel assemblies to be loaded into a given MPC.

2.4.3.1 Choose a fuel assembly minimum enrichment, E_{235}.

2.4.3.2 Calculate the maximum allowable fuel assembly average burnup for a minimum cooling time between 3 and 20 years and the applicable fuel assembly maximum decay using the equation below.

$$Bu = (A \times q) + (B \times q^2) + (C \times q^3) + [D \times (E_{235})^2] + (E \times q \times E_{235}) + (F \times q^2 \times E_{235}) + G$$

Equation 2.4.3

Where:

Bu = Maximum allowable average burnup per fuel assembly (MWD/MTU)

q = Maximum allowable decay heat per fuel assembly determined in Section 2.4.1 or 2.4.2 (kW)

E_{235} = Minimum fuel assembly average enrichment (wt. % ^{235}U) (e.g., for 4.05 wt.%, use 4.05)

A through G = Coefficients from Tables 2.4-3 and 2.4-4 for the applicable fuel assembly array/class and minimum cooling time

2.4.3.3 Calculated burnup limits shall be rounded down to the nearest integer.

2.4.3.4 Calculated burnup limits greater than 68,200 MWD/MTU for PWR fuel and 65,000 MWD/MTU for BWR must be reduced to be equal to these values.

2.4.3.5 Linear interpolation of calculated burnups between cooling times for a given fuel assembly maximum decay heat and minimum enrichment is permitted. For example, the allowable burnup for a cooling time of 4.5 years may be interpolated between those burnups calculated for 4 year and 5 years.

2.4.3 Burnup Limits as a Function of Cooling Time for ZR-Clad Fuel (cont'd)

2.4.3.6 Each ZR-clad fuel assembly to be stored must have a MINIMUM ENRICHMENT greater than or equal to the value used in Step 2.4.3.2.

2.4.3.7 When complying with the maximum fuel assembly decay heat limits, users must account for the decay heat from NON-FUEL HARDWARE, as applicable for the particular fuel storage location, to ensure the decay heat emitted by all contents in a storage location does not exceed the limit.

Table 2.4-3 (Page 1 of 8)

PWR Fuel Assembly Cooling Time-Dependent Coefficients
(ZR-Clad Fuel)

Cooling Time (years)	Array/Class 14x14A						
	A	B	C	D	E	F	G
≥ 3	20277.1	303.592	-68.329	-139.41	2993.67	-498.159	-615.411
≥ 4	35560.1	-6034.67	985.415	-132.734	3578.92	-723.721	-609.84
≥ 5	48917.9	-14499.5	2976.09	-150.707	4072.55	-892.691	-54.8362
≥ 6	59110.3	-22507	5255.61	-177.017	4517.03	-1024.01	613.36
≥ 7	67595.6	-30158.1	7746.6	-200.128	4898.71	-1123.21	716.004
≥ 8	74424.9	-36871.1	10169.4	-218.676	5203.64	-1190.24	741.163
≥ 9	81405.8	-44093.1	12910.8	-227.916	5405.34	-1223.27	250.224
≥ 10	86184.3	-49211.7	15063.4	-237.641	5607.96	-1266.21	134.435
≥ 11	92024.9	-55666.8	17779.6	-240.973	5732.25	-1282.12	-401.456
≥ 12	94775.8	-58559.7	19249.9	-246.369	5896.27	-1345.42	-295.435
≥ 13	100163	-64813.8	22045.1	-242.572	5861.86	-1261.66	-842.159
≥ 14	103971	-69171	24207	-242.651	5933.96	-1277.48	-1108.99
≥ 15	108919	-75171.1	27152.4	-243.154	6000.2	-1301.19	-1620.63
≥ 16	110622	-76715.2	28210.2	-240.235	6028.33	-1307.74	-1425.5
≥ 17	115582	-82929.7	31411.9	-235.234	5982.3	-1244.11	-1948.05
≥ 18	119195	-87323.5	33881.4	-233.28	6002.43	-1245.95	-2199.41
≥ 19	121882	-90270.6	35713.7	-231.873	6044.42	-1284.55	-2264.05
≥ 20	124649	-93573.5	37853.1	-230.22	6075.82	-1306.57	-2319.63

Table 2.4-3 (Page 2 of 8)

PWR Fuel Assembly Cooling Time-Dependent Coefficients
(ZR-Clad Fuel)

Cooling Time (years)	Array/Class 14x14B						
	A	B	C	D	E	F	G
≥ 3	18937.9	70.2997	-28.6224	-130.732	2572.36	-383.393	-858.17
≥ 4	32058.7	-4960.63	745.224	-125.978	3048.98	-551.656	-549.108
≥ 5	42626.3	-10804.1	1965.09	-139.722	3433.49	-676.643	321.88
≥ 6	51209.6	-16782.3	3490.45	-158.929	3751.01	-761.524	847.282
≥ 7	57829.9	-21982	5009.12	-180.026	4066.65	-846.272	1200.45
≥ 8	62758	-26055.3	6330.88	-196.804	4340.18	-928.336	1413.17
≥ 9	68161.4	-30827.6	7943.87	-204.454	4500.52	-966.347	1084.69
≥ 10	71996.8	-34224.3	9197.25	-210.433	4638.94	-1001.83	1016.38
≥ 11	75567.3	-37486.1	10466.9	-214.95	4759.55	-1040.85	848.169
≥ 12	79296.7	-40900.3	11799.6	-212.898	4794.13	-1040.51	576.242
≥ 13	82257.3	-43594	12935	-212.8	4845.81	-1056.01	410.807
≥ 14	83941.2	-44915.2	13641	-215.389	4953.19	-1121.71	552.724
≥ 15	87228.5	-48130	15056.9	-212.545	4951.12	-1112.5	260.194
≥ 16	90321.7	-50918.3	16285.5	-206.094	4923.36	-1106.35	-38.7487
≥ 17	92836.2	-53314.5	17481.7	-203.139	4924.61	-1109.32	-159.673
≥ 18	93872.8	-53721.4	17865.1	-202.573	4956.21	-1136.9	30.0594
≥ 19	96361.6	-56019.1	19075.9	-199.068	4954.59	-1156.07	-125.917
≥ 20	98647.5	-57795.1	19961.8	-191.502	4869.59	-1108.74	-217.603

Table 2.4-3 (Page 3 of 8)

PWR Fuel Assembly Cooling Time-Dependent Coefficients
(ZR-Clad Fuel)

Cooling Time (years)	Array/Class 14x14C						
	A	B	C	D	E	F	G
≥ 3	19176.9	192.012	-66.7595	-138.112	2666.73	-407.664	-1372.41
≥ 4	32040.3	-4731.4	651.014	-124.944	3012.63	-530.456	-890.059
≥ 5	43276.7	-11292.8	2009.76	-142.172	3313.91	-594.917	-200.195
≥ 6	51315.5	-16920.5	3414.76	-164.287	3610.77	-652.118	463.041
≥ 7	57594.7	-21897.6	4848.49	-189.606	3940.67	-729.367	781.46
≥ 8	63252.3	-26562.8	6273.01	-199.974	4088.41	-732.054	693.879
≥ 9	67657.5	-30350.9	7533.4	-211.77	4283.39	-772.916	588.456
≥ 10	71834.4	-34113.7	8857.32	-216.408	4383.45	-774.982	380.243
≥ 11	75464.1	-37382.1	10063	-218.813	4460.69	-776.665	160.668
≥ 12	77811.1	-39425.1	10934.3	-225.193	4604.68	-833.459	182.463
≥ 13	81438.3	-42785.4	12239.9	-220.943	4597.28	-803.32	-191.636
≥ 14	84222.1	-45291.6	13287.9	-218.366	4608.13	-791.655	-354.59
≥ 15	86700.1	-47582.6	14331.2	-218.206	4655.34	-807.366	-487.316
≥ 16	88104.7	-48601.1	14927.9	-219.498	4729.97	-849.446	-373.196
≥ 17	91103.3	-51332.5	16129	-212.138	4679.91	-822.896	-654.296
≥ 18	93850.4	-53915.8	17336.9	-207.666	4652.65	-799.697	-866.307
≥ 19	96192.9	-55955.8	18359.3	-203.462	4642.65	-800.315	-1007.75
≥ 20	97790.4	-57058.1	19027.7	-200.963	4635.88	-799.721	-951.122

Table 2.4-3 (Page 4 of 8)

PWR Fuel Assembly Cooling Time-Dependent Coefficients
(ZR-Clad Fuel)

Cooling Time (years)	Array/Class 15x15A/B/C						
	A	B	C	D	E	F	G
≥ 3	15789.2	119.829	-21.8071	-127.422	2152.53	-267.717	-580.768
≥ 4	26803.8	-3312.93	415.027	-116.279	2550.15	-386.33	-367.168
≥ 5	36403.6	-7831.93	1219.66	-126.065	2858.32	-471.785	326.863
≥ 6	44046.1	-12375.9	2213.52	-145.727	3153.45	-539.715	851.971
≥ 7	49753.5	-16172.6	3163.61	-166.946	3428.38	-603.598	1186.31
≥ 8	55095.4	-20182.5	4287.03	-183.047	3650.42	-652.92	1052.4
≥ 9	58974.4	-23071.6	5156.53	-191.718	3805.41	-687.18	1025
≥ 10	62591.8	-25800.8	5995.95	-195.105	3884.14	-690.659	868.556
≥ 11	65133.1	-27747.4	6689	-203.095	4036.91	-744.034	894.607
≥ 12	68448.4	-30456	7624.9	-202.201	4083.52	-753.391	577.914
≥ 13	71084.4	-32536.4	8381.78	-201.624	4117.93	-757.16	379.105
≥ 14	73459.5	-34352.3	9068.86	-197.988	4113.16	-747.015	266.536
≥ 15	75950.7	-36469.4	9920.52	-199.791	4184.91	-779.222	57.9429
≥ 16	76929.1	-36845.6	10171.3	-197.88	4206.24	-794.541	256.099
≥ 17	79730	-39134.8	11069.4	-190.865	4160.42	-773.448	-42.6853
≥ 18	81649.2	-40583	11736.1	-187.604	4163.36	-785.838	-113.614
≥ 19	83459	-41771.8	12265.9	-181.461	4107.51	-758.496	-193.442
≥ 20	86165.4	-44208.8	13361.2	-178.89	4107.62	-768.671	-479.778

Table 2.4-3 (Page 5 of 8)

PWR Fuel Assembly Cooling Time-Dependent Coefficients
(ZR-Clad Fuel)

Cooling Time (years)	Array/Class 15x15D/E/F/H						
	A	B	C	D	E	F	G
≥ 3	15192.5	50.5722	-12.3042	-126.906	2009.71	-235.879	-561.574
≥ 4	25782.5	-3096.5	369.096	-113.289	2357.75	-334.695	-254.964
≥ 5	35026.5	-7299.87	1091.93	-124.619	2664	-414.527	470.916
≥ 6	42234.9	-11438.4	1967.63	-145.948	2945.81	-474.981	1016.84
≥ 7	47818.4	-15047	2839.22	-167.273	3208.95	-531.296	1321.12
≥ 8	52730.7	-18387.2	3702.43	-175.057	3335.58	-543.232	1223.61
≥ 9	56254.6	-20999.9	4485.93	-190.489	3547.98	-600.64	1261.55
≥ 10	59874.6	-23706.5	5303.88	-193.807	3633.01	-611.892	1028.63
≥ 11	62811	-25848.4	5979.64	-194.997	3694.14	-618.968	862.738
≥ 12	65557.6	-27952.4	6686.74	-198.224	3767.28	-635.126	645.139
≥ 13	67379.4	-29239.2	7197.49	-200.164	3858.53	-677.958	652.601
≥ 14	69599.2	-30823.8	7768.51	-196.788	3868.2	-679.88	504.443
≥ 15	71806.7	-32425	8360.38	-191.935	3851.65	-669.917	321.146
≥ 16	73662.6	-33703.5	8870.78	-187.366	3831.59	-658.419	232.335
≥ 17	76219.8	-35898.1	9754.72	-189.111	3892.07	-694.244	-46.924
≥ 18	76594.4	-35518.2	9719.78	-185.11	3897.04	-712.82	236.047
≥ 19	78592.7	-36920.8	10316.5	-179.54	3865.84	-709.551	82.478
≥ 20	80770.5	-38599.9	11051.3	-175.106	3858.67	-723.211	-116.014

Table 2.4-3 (Page 6 of 8)

PWR Fuel Assembly Cooling Time-Dependent Coefficients
(ZR-Clad Fuel)

Cooling Time (years)	Array/Class 16X16A						
	A	B	C	D	E	F	G
≥ 3	17038.2	158.445	-37.6008	-136.707	2368.1	-321.58	-700.033
≥ 4	29166.3	-3919.95	508.439	-125.131	2782.53	-455.722	-344.199
≥ 5	40285	-9762.36	1629.72	-139.652	3111.83	-539.804	139.67
≥ 6	48335.7	-15002.6	2864.09	-164.702	3444.97	-614.756	851.706
≥ 7	55274.9	-20190	4258.03	-185.909	3728.11	-670.841	920.035
≥ 8	60646.6	-24402.4	5483.54	-199.014	3903.29	-682.26	944.913
≥ 9	64663.2	-27753.1	6588.21	-215.318	4145.34	-746.822	967.914
≥ 10	69306.9	-31739.1	7892.13	-218.898	4237.04	-746.815	589.277
≥ 11	72725.8	-34676.6	8942.26	-220.836	4312.93	-750.85	407.133
≥ 12	76573.8	-38238.7	10248.1	-224.934	4395.85	-757.914	23.7549
≥ 13	78569	-39794.3	10914.9	-224.584	4457	-776.876	69.428
≥ 14	81559.4	-42453.6	11969.6	-222.704	4485.28	-778.427	-203.031
≥ 15	84108.6	-44680.4	12897.8	-218.387	4460	-746.756	-329.078
≥ 16	86512.2	-46766.8	13822.8	-216.278	4487.79	-759.882	-479.729
≥ 17	87526.7	-47326.2	14221	-218.894	4567.68	-805.659	-273.692
≥ 18	90340.3	-49888.6	15349.8	-212.139	4506.29	-762.236	-513.316
≥ 19	93218.2	-52436.7	16482.4	-207.653	4504.12	-776.489	-837.1
≥ 20	95533.9	-54474.1	17484.2	-203.094	4476.21	-760.482	-955.662

Table 2.4-3 (Page 7 of 8)

PWR Fuel Assembly Cooling Time-Dependent Coefficients
(ZR-Clad Fuel)

Cooling Time (years)	Array/Class 17x17A						
	A	B	C	D	E	F	G
≥ 3	16784.4	3.90244	-10.476	-128.835	2256.98	-287.108	-263.081
≥ 4	28859	-3824.72	491.016	-120.108	2737.65	-432.361	-113.457
≥ 5	40315.9	-9724	1622.89	-140.459	3170.28	-547.749	425.136
≥ 6	49378.5	-15653.1	3029.25	-164.712	3532.55	-628.93	842.73
≥ 7	56759.5	-21320.4	4598.78	-190.58	3873.21	-698.143	975.46
≥ 8	63153.4	-26463.8	6102.47	-201.262	4021.84	-685.431	848.497
≥ 9	67874.9	-30519.2	7442.84	-218.184	4287.23	-754.597	723.305
≥ 10	72676.8	-34855.2	8928.27	-222.423	4382.07	-741.243	387.877
≥ 11	75623	-37457.1	9927.65	-232.962	4564.55	-792.051	388.402
≥ 12	80141.8	-41736.5	11509.8	-232.944	4624.72	-787.134	-164.727
≥ 13	83587.5	-45016.4	12800.9	-230.643	4623.2	-745.177	-428.635
≥ 14	86311.3	-47443.4	13815.2	-228.162	4638.89	-729.425	-561.758
≥ 15	87839.2	-48704.1	14500.3	-231.979	4747.67	-775.801	-441.959
≥ 16	91190.5	-51877.4	15813.2	-225.768	4692.45	-719.311	-756.537
≥ 17	94512	-55201.2	17306.1	-224.328	4740.86	-747.11	-1129.15
≥ 18	96959	-57459.9	18403.8	-220.038	4721.02	-726.928	-1272.47
≥ 19	99061.1	-59172.1	19253.1	-214.045	4663.37	-679.362	-1309.88
≥ 20	100305	-59997.5	19841.1	-216.112	4721.71	-705.463	-1148.45

Table 2.4-3 (Page 8 of 8)

PWR Fuel Assembly Cooling Time-Dependent Coefficients
(ZR-Clad Fuel)

Cooling Time (years)	Array/Class 17x17B/C						
	A	B	C	D	E	F	G
≥ 3	15526.8	18.0364	-9.36581	-128.415	2050.81	-243.915	-426.07
≥ 4	26595.4	-3345.47	409.264	-115.394	2429.48	-350.883	-243.477
≥ 5	36190.4	-7783.2	1186.37	-130.008	2769.53	-438.716	519.95
≥ 6	44159	-12517.5	2209.54	-150.234	3042.25	-489.858	924.151
≥ 7	50399.6	-16780.6	3277.26	-173.223	3336.58	-555.743	1129.66
≥ 8	55453.9	-20420	4259.68	-189.355	3531.65	-581.917	1105.62
≥ 9	59469.3	-23459.8	5176.62	-199.63	3709.99	-626.667	1028.74
≥ 10	63200.5	-26319.6	6047.8	-203.233	3783.02	-619.949	805.311
≥ 11	65636.3	-28258.3	6757.23	-214.247	3972.8	-688.56	843.457
≥ 12	68989.7	-30904.4	7626.53	-212.539	3995.62	-678.037	495.032
≥ 13	71616.6	-32962.2	8360.45	-210.386	4009.11	-666.542	317.009
≥ 14	73923.9	-34748	9037.75	-207.668	4020.13	-662.692	183.086
≥ 15	76131.8	-36422.3	9692.32	-203.428	4014.55	-655.981	47.5234
≥ 16	77376.5	-37224.7	10111.4	-207.581	4110.76	-703.37	161.128
≥ 17	80294.9	-39675.9	11065.9	-201.194	4079.24	-691.636	-173.782
≥ 18	82219.8	-41064.8	11672.1	-195.431	4043.83	-675.432	-286.059
≥ 19	84168.9	-42503.6	12309.4	-190.602	4008.19	-656.192	-372.411
≥ 20	86074.2	-43854.4	12935.9	-185.767	3985.57	-656.72	-475.953

Table 2.4-4 (Page 1 of 10)

BWR Fuel Assembly Cooling Time-Dependent Coefficients
(ZR-Clad Fuel)

Cooling Time (years)	Array/Class 7x7B						
	A	B	C	D	E	F	G
≥ 3	26409.1	28347.5	-16858	-147.076	5636.32	-1606.75	1177.88
≥ 4	61967.8	-6618.31	-4131.96	-113.949	6122.77	-2042.85	-96.7439
≥ 5	91601.1	-49298.3	17826.5	-132.045	6823.14	-2418.49	-185.189
≥ 6	111369	-80890.1	35713.8	-150.262	7288.51	-2471.1	86.6363
≥ 7	126904	-108669	53338.1	-167.764	7650.57	-2340.78	150.403
≥ 8	139181	-132294	69852.5	-187.317	8098.66	-2336.13	97.5285
≥ 9	150334	-154490	86148.1	-193.899	8232.84	-2040.37	-123.029
≥ 10	159897	-173614	100819	-194.156	8254.99	-1708.32	-373.605
≥ 11	166931	-186860	111502	-193.776	8251.55	-1393.91	-543.677
≥ 12	173691	-201687	125166	-202.578	8626.84	-1642.3	-650.814
≥ 13	180312	-215406	137518	-201.041	8642.19	-1469.45	-810.024
≥ 14	185927	-227005	148721	-197.938	8607.6	-1225.95	-892.876
≥ 15	191151	-236120	156781	-191.625	8451.86	-846.27	-1019.4
≥ 16	195761	-244598	165372	-187.043	8359.19	-572.561	-1068.19
≥ 17	200791	-256573	179816	-197.26	8914.28	-1393.37	-1218.63
≥ 18	206068	-266136	188841	-187.191	8569.56	-730.898	-1363.79
≥ 19	210187	-273609	197794	-182.151	8488.23	-584.727	-1335.59
≥ 20	213731	-278120	203074	-175.864	8395.63	-457.304	-1364.38

Table 2.4-4 (Page 2 of 10)

BWR Fuel Assembly Cooling Time-Dependent Coefficients
(ZR-Clad Fuel)

Cooling Time (years)	Array/Class 8x8B						
	A	B	C	D	E	F	G
≥ 3	28219.6	28963.7	-17616.2	-147.68	5887.41	-1730.96	1048.21
≥ 4	66061.8	-10742.4	-1961.82	-123.066	6565.54	-2356.05	-298.005
≥ 5	95790.7	-53401.7	19836.7	-134.584	7145.41	-2637.09	-298.858
≥ 6	117477	-90055.9	41383.9	-154.758	7613.43	-2612.69	-64.9921
≥ 7	134090	-120643	60983	-168.675	7809	-2183.3	-40.8885
≥ 8	148186	-149181	81418.7	-185.726	8190.07	-2040.31	-260.773
≥ 9	159082	-172081	99175.2	-197.185	8450.86	-1792.04	-381.705
≥ 10	168816	-191389	113810	-195.613	8359.87	-1244.22	-613.594
≥ 11	177221	-210599	131099	-208.3	8810	-1466.49	-819.773
≥ 12	183929	-224384	143405	-207.497	8841.33	-1227.71	-929.708
≥ 13	191093	-240384	158327	-204.95	8760.17	-811.708	-1154.76
≥ 14	196787	-252211	169664	-204.574	8810.95	-610.928	-1208.97
≥ 15	203345	-267656	186057	-208.962	9078.41	-828.954	-1383.76
≥ 16	207973	-276838	196071	-204.592	9024.17	-640.808	-1436.43
≥ 17	213891	-290411	211145	-202.169	9024.19	-482.1	-1595.28
≥ 18	217483	-294066	214600	-194.243	8859.35	-244.684	-1529.61
≥ 19	220504	-297897	219704	-190.161	8794.97	-10.9863	-1433.86
≥ 20	227821	-318395	245322	-194.682	9060.96	-350.308	-1741.16

Table 2.4-4 (Page 3 of 10)

BWR Fuel Assembly Cooling Time-Dependent Coefficients
(ZR-Clad Fuel)

Cooling Time (years)	Array/Class 8x8C/D/E						
	A	B	C	D	E	F	G
≥ 3	28592.7	28691.5	-17773.6	-149.418	5969.45	-1746.07	1063.62
≥ 4	66720.8	-12115.7	-1154	-128.444	6787.16	-2529.99	-302.155
≥ 5	96929.1	-55827.5	21140.3	-136.228	7259.19	-2685.06	-334.328
≥ 6	118190	-92000.2	42602.5	-162.204	7907.46	-2853.42	-47.5465
≥ 7	135120	-123437	62827.1	-172.397	8059.72	-2385.81	-75.0053
≥ 8	149162	-152986	84543.1	-195.458	8559.11	-2306.54	-183.595
≥ 9	161041	-177511	103020	-200.087	8632.84	-1864.4	-433.081
≥ 10	171754	-201468	122929	-209.799	8952.06	-1802.86	-755.742
≥ 11	179364	-217723	137000	-215.803	9142.37	-1664.82	-847.268
≥ 12	186090	-232150	150255	-216.033	9218.36	-1441.92	-975.817
≥ 13	193571	-249160	165997	-213.204	9146.99	-1011.13	-1119.47
≥ 14	200034	-263671	180359	-210.559	9107.54	-694.626	-1312.55
≥ 15	205581	-275904	193585	-216.242	9446.57	-1040.65	-1428.13
≥ 16	212015	-290101	207594	-210.036	9212.93	-428.321	-1590.7
≥ 17	216775	-299399	218278	-204.611	9187.86	-398.353	-1657.6
≥ 18	220653	-306719	227133	-202.498	9186.34	-181.672	-1611.86
≥ 19	224859	-314004	235956	-193.902	8990.14	145.151	-1604.71
≥ 20	228541	-320787	245449	-200.727	9310.87	-230.252	-1570.18

Table 2.4-4 (Page 4 of 10)

BWR Fuel Assembly Cooling Time-Dependent Coefficients
(ZR-Clad Fuel)

Cooling Time (years)	Array/Class 9x9A						
	A	B	C	D	E	F	G
≥ 3	30538.7	28463.2	-18105.5	-150.039	6226.92	-1876.69	1034.06
≥ 4	71040.1	-16692.2	1164.15	-128.241	7105.27	-2728.58	-414.09
≥ 5	100888	-60277.7	24150.1	-142.541	7896.11	-3272.86	-232.197
≥ 6	124846	-102954	50350.8	-161.849	8350.16	-3163.44	-91.1396
≥ 7	143516	-140615	76456.5	-185.538	8833.04	-2949.38	-104.802
≥ 8	158218	-171718	99788.2	-196.315	9048.88	-2529.26	-259.929
≥ 9	172226	-204312	126620	-214.214	9511.56	-2459.19	-624.954
≥ 10	182700	-227938	146736	-215.793	9555.41	-1959.92	-830.943
≥ 11	190734	-246174	163557	-218.071	9649.43	-1647.5	-935.021
≥ 12	199997	-269577	186406	-223.975	9884.92	-1534.34	-1235.27
≥ 13	207414	-287446	204723	-228.808	10131.7	-1614.49	-1358.61
≥ 14	215263	-306131	223440	-220.919	9928.27	-988.276	-1638.05
≥ 15	221920	-321612	239503	-217.949	9839.02	-554.709	-1784.04
≥ 16	226532	-331778	252234	-216.189	9893.43	-442.149	-1754.72
≥ 17	232959	-348593	272609	-219.907	10126.3	-663.84	-1915.3
≥ 18	240810	-369085	296809	-219.729	10294.6	-859.302	-2218.87
≥ 19	244637	-375057	304456	-210.997	10077.8	-425.446	-2127.83
≥ 20	248112	-379262	309391	-204.191	9863.67	100.27	-2059.39

Table 2.4-4 (Page 5 of 10)

BWR Fuel Assembly Cooling Time-Dependent Coefficients
(ZR-Clad Fuel)

Cooling Time (years)	Array/Class 9x9B						
	A	B	C	D	E	F	G
≥ 3	30613.2	28985.3	-18371	-151.117	6321.55	-1881.28	988.92
≥ 4	71346.6	-15922.9	631.132	-128.876	7232.47	-2810.64	-471.737
≥ 5	102131	-60654.1	23762.7	-140.748	7881.6	-3156.38	-417.979
≥ 6	127187	-105842	51525.2	-162.228	8307.4	-2913.08	-342.13
≥ 7	146853	-145834	79146.5	-185.192	8718.74	-2529.57	-484.885
≥ 8	162013	-178244	103205	-197.825	8896.39	-1921.58	-584.013
≥ 9	176764	-212856	131577	-215.41	9328.18	-1737.12	-1041.11
≥ 10	186900	-235819	151238	-218.98	9388.08	-1179.87	-1202.83
≥ 11	196178	-257688	171031	-220.323	9408.47	-638.53	-1385.16
≥ 12	205366	-280266	192775	-223.715	9592.12	-472.261	-1661.6
≥ 13	215012	-306103	218866	-231.821	9853.37	-361.449	-1985.56
≥ 14	222368	-324558	238655	-228.062	9834.57	3.47358	-2178.84
≥ 15	226705	-332738	247316	-224.659	9696.59	632.172	-2090.75
≥ 16	233846	-349835	265676	-221.533	9649.93	913.747	-2243.34
≥ 17	243979	-379622	300077	-222.351	9792.17	1011.04	-2753.36
≥ 18	247774	-386203	308873	-220.306	9791.37	1164.58	-2612.25
≥ 19	254041	-401906	327901	-213.96	9645.47	1664.94	-2786.2
≥ 20	256003	-402034	330566	-215.242	9850.42	1359.46	-2550.06

Table 2.4-4 (Page 6 of 10)

BWR Fuel Assembly Cooling Time-Dependent Coefficients
(ZR-Clad Fuel)

Cooling Time (years)	Array/Class 9x9C/D						
	A	B	C	D	E	F	G
≥ 3	30051.6	29548.7	-18614.2	-148.276	6148.44	-1810.34	1006
≥ 4	70472.7	-14696.6	-233.567	-127.728	7008.69	-2634.22	-444.373
≥ 5	101298	-59638.9	23065.2	-138.523	7627.57	-2958.03	-377.965
≥ 6	125546	-102740	49217.4	-160.811	8096.34	-2798.88	-259.767
≥ 7	143887	-139261	74100.4	-184.302	8550.86	-2517.19	-275.151
≥ 8	159633	-172741	98641.4	-194.351	8636.89	-1838.81	-486.731
≥ 9	173517	-204709	124803	-212.604	9151.98	-1853.27	-887.137
≥ 10	182895	-225481	142362	-218.251	9262.59	-1408.25	-978.356
≥ 11	192530	-247839	162173	-217.381	9213.58	-818.676	-1222.12
≥ 12	201127	-268201	181030	-215.552	9147.44	-232.221	-1481.55
≥ 13	209538	-289761	203291	-225.092	9588.12	-574.227	-1749.35
≥ 14	216798	-306958	220468	-222.578	9518.22	-69.9307	-1919.71
≥ 15	223515	-323254	237933	-217.398	9366.52	475.506	-2012.93
≥ 16	228796	-334529	250541	-215.004	9369.33	662.325	-2122.75
≥ 17	237256	-356311	273419	-206.483	9029.55	1551.3	-2367.96
≥ 18	242778	-369493	290354	-215.557	9600.71	659.297	-2589.32
≥ 19	246704	-377971	302630	-210.768	9509.41	1025.34	-2476.06
≥ 20	249944	-382059	308281	-205.495	9362.63	1389.71	-2350.49

Table 2.4-4 (Page 7 of 10)

BWR Fuel Assembly Cooling Time-Dependent Coefficients
(ZR-Clad Fuel)

Cooling Time (years)	Array/Class 9x9E/F						
	A	B	C	D	E	F	G
≥ 3	30284.3	26949.5	-16926.4	-147.914	6017.02	-1854.81	1026.15
≥ 4	69727.4	-17117.2	1982.33	-127.983	6874.68	-2673.01	-359.962
≥ 5	98438.9	-58492	23382.2	-138.712	7513.55	-3038.23	-112.641
≥ 6	119765	-95024.1	45261	-159.669	8074.25	-3129.49	221.182
≥ 7	136740	-128219	67940.1	-182.439	8595.68	-3098.17	315.544
≥ 8	150745	-156607	88691.5	-193.941	8908.73	-2947.64	142.072
≥ 9	162915	-182667	109134	-198.37	8999.11	-2531	-93.4908
≥ 10	174000	-208668	131543	-210.777	9365.52	-2511.74	-445.876
≥ 11	181524	-224252	145280	-212.407	9489.67	-2387.49	-544.123
≥ 12	188946	-240952	160787	-210.65	9478.1	-2029.94	-652.339
≥ 13	193762	-250900	171363	-215.798	9742.31	-2179.24	-608.636
≥ 14	203288	-275191	196115	-218.113	9992.5	-2437.71	-1065.92
≥ 15	208108	-284395	205221	-213.956	9857.25	-1970.65	-1082.94
≥ 16	215093	-301828	224757	-209.736	9789.58	-1718.37	-1303.35
≥ 17	220056	-310906	234180	-201.494	9541.73	-1230.42	-1284.15
≥ 18	224545	-320969	247724	-206.807	9892.97	-1790.61	-1381.9
≥ 19	226901	-322168	250395	-204.073	9902.14	-1748.78	-1253.22
≥ 20	235561	-345414	276856	-198.306	9720.78	-1284.14	-1569.18

Table 2.4-4 (Page 8 of 10)

BWR Fuel Assembly Cooling Time-Dependent Coefficients
(ZR-Clad Fuel)

Cooling Time (years)	Array/Class 9x9G						
	A	B	C	D	E	F	G
≥ 3	35158.5	26918.5	-17976.7	-149.915	6787.19	-2154.29	836.894
≥ 4	77137.2	-19760.1	2371.28	-130.934	8015.43	-3512.38	-455.424
≥ 5	113405	-77931.2	35511.2	-150.637	8932.55	-4099.48	-629.806
≥ 6	139938	-128700	68698.3	-173.799	9451.22	-3847.83	-455.905
≥ 7	164267	-183309	109526	-193.952	9737.91	-3046.84	-737.992
≥ 8	182646	-227630	146275	-210.936	10092.3	-2489.3	-1066.96
≥ 9	199309	-270496	184230	-218.617	10124.3	-1453.81	-1381.41
≥ 10	213186	-308612	221699	-235.828	10703.2	-1483.31	-1821.73
≥ 11	225587	-342892	256242	-236.112	10658.5	-612.076	-2134.65
≥ 12	235725	-370471	285195	-234.378	10604.9	118.591	-2417.89
≥ 13	247043	-404028	323049	-245.79	11158.2	-281.813	-2869.82
≥ 14	253649	-421134	342682	-243.142	11082.3	400.019	-2903.88
≥ 15	262750	-448593	376340	-245.435	11241.2	581.355	-3125.07
≥ 16	270816	-470846	402249	-236.294	10845.4	1791.46	-3293.07
≥ 17	279840	-500272	441964	-241.324	11222.6	1455.84	-3528.25
≥ 18	284533	-511287	458538	-240.905	11367.2	1459.68	-3520.94
≥ 19	295787	-545885	501824	-235.685	11188.2	2082.21	-3954.2
≥ 20	300209	-556936	519174	-229.539	10956	2942.09	-3872.87

Table 2.4-4 (Page 9 of 10)

BWR Fuel Assembly Cooling Time-Dependent Coefficients
(ZR-Clad Fuel)

Cooling Time (years)	Array/Class 10x10A/B						
	A	B	C	D	E	F	G
≥ 3	29285.4	27562.2	-16985	-148.415	5960.56	-1810.79	1001.45
≥ 4	67844.9	-14383	395.619	-127.723	6754.56	-2547.96	-369.267
≥ 5	96660.5	-55383.8	21180.4	-137.17	7296.6	-2793.58	-192.85
≥ 6	118098	-91995	42958	-162.985	7931.44	-2940.84	60.9197
≥ 7	135115	-123721	63588.9	-171.747	8060.23	-2485.59	73.6219
≥ 8	148721	-151690	84143.9	-190.26	8515.81	-2444.25	-63.4649
≥ 9	160770	-177397	104069	-197.534	8673.6	-2101.25	-331.046
≥ 10	170331	-198419	121817	-213.692	9178.33	-2351.54	-472.844
≥ 11	179130	-217799	138652	-209.75	9095.43	-1842.88	-705.254
≥ 12	186070	-232389	151792	-208.946	9104.52	-1565.11	-822.73
≥ 13	192407	-246005	164928	-209.696	9234.7	-1541.54	-979.245
≥ 14	200493	-265596	183851	-207.639	9159.83	-1095.72	-1240.61
≥ 15	205594	-276161	195760	-213.491	9564.23	-1672.22	-1333.64
≥ 16	209386	-282942	204110	-209.322	9515.83	-1506.86	-1286.82
≥ 17	214972	-295149	217095	-202.445	9292.34	-893.6	-1364.97
≥ 18	219312	-302748	225826	-198.667	9272.27	-878.536	-1379.58
≥ 19	223481	-310663	235908	-194.825	9252.9	-785.066	-1379.62
≥ 20	227628	-319115	247597	-199.194	9509.02	-1135.23	-1386.19

Table 2.4-4 (Page 10 of 10)

BWR Fuel Assembly Cooling Time-Dependent Coefficients
(ZR-Clad Fuel)

Cooling Time (years)	Array/Class 10x10C						
	A	B	C	D	E	F	G
≥ 3	31425.3	27358.9	-17413.3	-152.096	6367.53	-1967.91	925.763
≥ 4	71804	-16964.1	1000.4	-129.299	7227.18	-2806.44	-416.92
≥ 5	102685	-62383.3	24971.2	-142.316	7961	-3290.98	-354.784
≥ 6	126962	-105802	51444.6	-164.283	8421.44	-3104.21	-186.615
≥ 7	146284	-145608	79275.5	-188.967	8927.23	-2859.08	-251.163
≥ 8	162748	-181259	105859	-199.122	9052.91	-2206.31	-554.124
≥ 9	176612	-214183	133261	-217.56	9492.17	-1999.28	-860.669
≥ 10	187756	-239944	155315	-219.56	9532.45	-1470.9	-1113.42
≥ 11	196580	-260941	174536	-222.457	9591.64	-944.473	-1225.79
≥ 12	208017	-291492	204805	-233.488	10058.3	-1217.01	-1749.84
≥ 13	214920	-307772	221158	-234.747	10137.1	-897.23	-1868.04
≥ 14	222562	-326471	240234	-228.569	9929.34	-183.47	-2016.12
≥ 15	228844	-342382	258347	-226.944	9936.76	117.061	-2106.05
≥ 16	233907	-353008	270390	-223.179	9910.72	360.39	-2105.23
≥ 17	244153	-383017	304819	-227.266	10103.2	380.393	-2633.23
≥ 18	249240	-395456	321452	-226.989	10284.1	169.947	-2623.67
≥ 19	254343	-406555	335240	-220.569	10070.5	764.689	-2640.2
≥ 20	260202	-421069	354249	-216.255	10069.9	854.497	-2732.77

3.0 DESIGN FEATURES

3.1 Site

3.1.1 Site Location

The HI-STORM 100 Cask System is authorized for general use by 10 CFR Part 50 license holders at various site locations under the provisions of 10 CFR 72, Subpart K.

3.2 Design Features Important for Criticality Control

3.2.1 MPC-24

1. Flux trap size: $\geq$ 1.09 in.

2. ^{10}B loading in the neutron absorbers: $\geq$ 0.0267 g/cm^2 (Boral) and $\geq$ 0.0223 g/cm^2 (METAMIC)

3.2.2 MPC-68 and MPC-68FF

1. Fuel cell pitch: $\geq$ 6.43 in.

2. ^{10}B loading in the neutron absorbers: $\geq$ 0.0372 g/cm^2 (Boral) and $\geq$ 0.0310 g/cm^2 (METAMIC)

3.2.3 MPC-68F

1. Fuel cell pitch: $\geq$ 6.43 in.

2. ^{10}B loading in the Boral neutron absorbers: $\geq$ 0.01 g/cm^2

3.2.4 MPC-24E and MPC-24EF

1. Flux trap size:

   i. Cells 3, 6, 19, and 22: $\geq$ 0.776 inch

   ii. All Other Cells: $\geq$ 1.076 inches

2. ^{10}B loading in the neutron absorbers: $\geq$ 0.0372 g/cm^2 (Boral) and $\geq$ 0.0310 g/cm^2 (METAMIC)

3.2.5 MPC-32 and MPC-32F

1. Fuel cell pitch: $\geq$ 9.158 inches

2. ^{10}B loading in the neutron absorbers: $\geq$ 0.0372 g/cm^2 (Boral) and $\geq$ 0.0310 g/cm^2 (METAMIC)

DESIGN FEATURES

3.2 Design features Important for Criticality Control (cont'd)

3.2.6 The fuel assemblies shall be positioned in the MPC to ensure that the active fuel region of intact fuel assemblies remains within the neutron poison region of the MPC basket with water in the MPC.

3.2.7 The B_4C content in METAMIC shall be $\leq$ 32.5 wt.%.

3.3 Codes and Standards

The American Society of Mechanical Engineers Boiler and Pressure Vessel Code (ASME Code), 1995 Edition with Addenda through 1997, is the governing Code for the HI-STORM 100 System, as clarified in Specification 3.3.1 below, except for Code Sections V and IX. The latest effective editions of ASME Code Sections V and IX, including addenda, may be used for activities governed by those sections, provided a written reconciliation of the later edition against the 1995 Edition, including addenda, is performed by the certificate holder. American Concrete Institute (ACI) 349-85 is the governing Code for plain concrete as clarified in Appendix 1.D of the Final Safety Analysis Report for the HI-STORM 100 Cask System.

3.3.1 Alternatives to Codes, Standards, and Criteria

Table 3-1 lists approved alternatives to the ASME Code for the design of the HI-STORM 100 Cask System.

3.3.2 Construction/Fabrication Alternatives to Codes, Standards, and Criteria

Proposed alternatives to the ASME Code, Section III, 1995 Edition with Addenda through 1997 including exceptions allowed by Specification 3.3.1 may be used on a case-specific basis when authorized by the Director of the Office of Nuclear Material Safety and Safeguards or designee. The request for such alternative should demonstrate that:

1. The proposed alternatives would provide an acceptable level of quality and safety, or

2. Compliance with the specified requirements of the ASME Code, Section III, 1995 Edition with Addenda through 1997, would result in hardship or unusual difficulty without a compensating increase in the level of quality and safety.

Requests for alternatives shall be submitted in accordance with 10 CFR 72.4

(continued)

DESIGN FEATURES

Table 3-1 (page 1 of 9)
LIST OF ASME CODE ALTERNATIVES FOR HI-STORM 100 CASK SYSTEM

Component	Reference ASME Code Section/Article	Code Requirement	Alternative, Justification & Compensatory Measures
MPC, MPC basket assembly, HI-STORM OVERPACK steel structure, and HI-TRAC TRANSFER CASK steel structure	Subsection NCA	General Requirements. Requires preparation of a Design Specification, Design Report, Overpressure Protection Report, Certification of Construction Report, Data Report, and other administrative controls for an ASME Code stamped vessel.	Because the MPC, OVERPACK, and TRANSFER CASK are not ASME Code stamped vessels, none of the specifications, reports, certificates, or other general requirements specified by NCA are required. In lieu of a Design Specification and Design Report, the HI-STORM FSAR includes the design criteria, service conditions, and load combinations for the design and operation of the HI-STORM 100 System as well as the results of the stress analyses to demonstrate that applicable Code stress limits are met. Additionally, the fabricator is not required to have an ASME-certified QA program. All important-to-safety activities are governed by the NRC-approved Holtec QA program. Because the cask components are not certified to the Code, the terms "Certificate Holder" and "Inspector" are not germane to the manufacturing of NRC-certified cask components. To eliminate ambiguity, the responsibilities assigned to the Certificate Holder in the various articles of Subsections NB, NG, and NF of the Code, as applicable, shall be interpreted to apply to the NRC Certificate of Compliance (CoC) holder (and by extension, to the component fabricator) if the requirement must be fulfilled. The Code term "Inspector" means the QA/QC personnel of the CoC holder and its vendors assigned to oversee and inspect the manufacturing process.
MPC	NB-1100	Statement of requirements for Code stamping of components.	MPC enclosure vessel is designed and will be fabricated in accordance with ASME Code, Section III, Subsection NB to the maximum practical extent, but Code stamping is not required.

Table 3-1 (page 2 of 9)
LIST OF ASME CODE ALTERNATIVES FOR HI-STORM 100 CASK SYSTEM

Component	Reference ASME Code Section/Article	Code Requirement	Alternative, Justification & Compensatory Measures
MPC basket supports and lift lugs	NB-1130	NB-1132.2(d) requires that the first connecting weld of a nonpressure-retaining structural attachment to a component shall be considered part of the component unless the weld is more than 2t from the pressure-retaining portion of the component, where t is the nominal thickness of the pressure-retaining material. NB-1132.2(e) requires that the first connecting weld of a welded nonstructural attachment to a component shall conform to NB-4430 if the connecting weld is within 2t from the pressure-retaining portion of the component.	The MPC basket supports (nonpressure-retaining structural attachments)and lift lugs (nonstructural attachments (relative to the function of lifting a loaded MPC) that are used exclusively for lifting an empty MPC) are welded to the inside of the pressure-retaining MPC shell, but are not designed in accordance with Subsection NB. The basket supports and associated attachment welds are designed to satisfy the stress limits of Subsection NG and the lift lugs and associated attachment welds are designed to satisfy the stress limits of Subsection NF, as a minimum. These attachments and their welds are shown by analysis to meet the respective stress limits for their service conditions. Likewise, non-structural items, such as shield plugs, spacers, etc. if used, can be attached to pressure-retaining parts in the same manner.
MPC	NB-2000	Requires materials to be supplied by ASME-approved material supplier.	Materials will be supplied by Holtec-approved suppliers with Certified Material Test Reports (CMTRs) in accordance with NB-2000 requirements.

Table 3-1 (page 3 of 9)
LIST OF ASME CODE ALTERNATIVES FOR HI-STORM 100 CASK SYSTEM

Component	Reference ASME Code Section/Article	Code Requirement	Alternative, Justification & Compensatory Measures
MPC, MPC basket assembly, HI-STORM OVERPACK and HI-TRAC TRANSFER CASK	NB-3100 NG-3100 NF-3100	Provides requirements for determining design loading conditions, such as pressure, temperature, and mechanical loads.	These requirements are not applicable. The HI-STORM FSAR, serving as the Design Specification, establishes the service conditions and load combinations for the storage system.
MPC	NB-3350	NB-3352.3 requires, for Category C joints, that the minimum dimensions of the welds and throat thickness shall be as shown in Figure NB-4243-1.	Due to MPC basket-to-shell interface requirements, the MPC shell-to-baseplate weld joint design (designated Category C) does not include a reinforcing fillet weld or a bevel in the MPC baseplate, which makes it different than any of the representative configurations depicted in Figure NB-4243-1. The transverse thickness of this weld is equal to the thickness of the adjoining shell (1/2 inch). The weld is designed as a full penetration weld that receives VT and RT or UT, as well as final surface PT examinations. Because the MPC shell design thickness is considerably larger than the minimum thickness required by the Code, a reinforcing fillet weld that would intrude into the MPC cavity space is not included. Not including this fillet weld provides for a higher quality radiographic examination of the full penetration weld. From the standpoint of stress analysis, the fillet weld serves to reduce the local bending stress (secondary stress) produced by the gross structural discontinuity defined by the flat plate/shell junction. In the MPC design, the shell and baseplate thicknesses are well beyond that required to meet their respective membrane stress intensity limits.

Table 3-1 (page 4 of 9)
LIST OF ASME CODE ALTERNATIVES FOR HI-STORM 100 CASK SYSTEM

Component	Reference ASME Code Section/Article	Code Requirement	Alternative, Justification & Compensatory Measures
MPC, MPC Basket Assembly, HI-STORM OVERPACK steel structure, and HI-TRAC TRANSFER CASK steel structure	NB-4120 NG-4120 NF-4120	NB-4121.2, NG-4121.2, and NF-4121.2 provide requirements for repetition of tensile or impact tests for material subjected to heat treatment during fabrication or installation.	In-shop operations of short duration that apply heat to a component, such as plasma cutting of plate stock, welding, machining, coating, and pouring of lead are not, unless explicitly stated by the Code, defined as heat treatment operations. For the steel parts in the HI-STORM 100 System components, the duration for which a part exceeds the off-normal temperature limit defined in Chapter 2 of the FSAR shall be limited to 24 hours in a particular manufacturing process (such as the HI-TRAC lead pouring process).
MPC, MPC basket assembly, HI-STORM OVERPACK steel structure, and HI-TRAC TRANSFER CASK steel structure	NB-4220 NF-4220	Requires certain forming tolerances to be met for cylindrical, conical, or spherical shells of a vessel.	The cylindricity measurements on the rolled shells are not specifically recorded in the shop travelers, as would be the case for a Code-stamped pressure vessel. Rather, the requirements on inter-component clearances (such as the MPC-to-TRANSFER CASK) are guaranteed through fixture-controlled manufacturing. The fabrication specification and shop procedures ensure that all dimensional design objectives, including inter-component annular clearances are satisfied. The dimensions required to be met in fabrication are chosen to meet the functional requirements of the dry storage components. Thus, although the post-forming Code cylindricity requirements are not evaluated for compliance directly, they are indirectly satisfied (actually exceeded) in the final manufactured components.
MPC Lid and Closure Ring Welds	NB-4243	Full penetration welds required for Category C Joints (flat head to main shell per NB-3352.3).	MPC lid and closure ring are not full penetration welds. They are welded independently to provide a redundant seal. Additionally, a weld efficiency factor of 0.45 has been applied to the analyses of these welds.

Table 3-1 (page 5 of 9)
LIST OF ASME CODE ALTERNATIVES FOR HI-STORM 100 CASK SYSTEM

Component	Reference ASME Code Section/Article	Code Requirement	Alternative, Justification & Compensatory Measures
MPC Lid to Shell Weld	NB-5230	Radiographic (RT) or ultrasonic (UT) examination required	Only UT or multi-layer liquid penetrant (PT) examination is permitted. If PT alone is used, at a minimum, it will include the root and final weld layers and each approximately 3/8 inch of weld depth.
MPC Closure Ring, Vent and Drain Cover Plate Welds	NB-5230	Radiographic (RT) or ultrasonic (UT) examination required	Root (if more than one weld pass is required) and final liquid penetrant examination to be performed in accordance with NB-5245. The closure ring provides independent redundant closure for vent and drain cover plates.
MPC Enclosure Vessel and Lid	NB-6111	All completed pressure retaining systems shall be pressure tested.	The MPC enclosure vessel is seal welded in the field following fuel assembly loading. The MPC enclosure vessel shall then be pressure tested as defined in Chapter 9. Accessibility for leakage inspections preclude a Code compliant pressure test. All MPC enclosure vessel welds (except closure ring and vent/drain cover plate) are inspected by volumetric examination, except the MPC lid-to-shell weld shall be verified by volumetric or multi-layer PT examination. If PT alone is used, at a minimum, it must include the root and final layers and each approximately 3/8 inch of weld depth. For either UT or PT, the maximum undetectable flaw size must be demonstrated to be less than the critical flaw size. The critical flaw size must be determined in accordance with ASME Section XI methods. The critical flaw size shall not cause the primary stress limits of NB-3000 to be exceeded. The inspection results, including relevant findings (indications), shall be made a permanent part of the user's records by video, photographic, or other means which provide an equivalent retrievable record of weld integrity. The video or photographic records should be taken during the final interpretation period described in ASME Section V, Article 6, T-676. The vent/drain cover plate and the closure ring welds are confirmed by liquid penetrant examination. The inspection of the weld must be performed by qualified personnel and shall meet the acceptance requirements of ASME Code Section III, NB-5350 for PT or NB-5332 for UT.

Table 3-1 (page 6 of 9)
LIST OF ASME CODE ALTERNATIVES FOR HI-STORM 100 CASK SYSTEM

Component	Reference ASME Code Section/Article	Code Requirement	Alternative, Justification & Compensatory Measures
MPC Enclosure Vessel	NB-7000	Vessels are required to have overpressure protection	No overpressure protection is provided. The function of the MPC enclosure vessel is to contain the radioactive contents under normal, off-normal, and accident conditions. The MPC vessel is designed to withstand maximum internal pressure considering 100% fuel rod failure and maximum accident temperatures.
MPC Enclosure Vessel	NB-8000	States requirements for nameplates, stamping and reports per NCA-8000.	The HI-STORM100 System is to be marked and identified in accordance with 10CFR71 and 10CFR72 requirements. Code stamping is not required. QA data package to be in accordance with Holtec approved QA program.
MPC Basket Assembly	NG-2000	Requires materials to be supplied by ASME-approved material supplier.	Materials will be supplied by Holtec-approved supplier with CMTRs in accordance with NG-2000 requirements.

Table 3-1 (page 7 of 9)
LIST OF ASME CODE ALTERNATIVES FOR HI-STORM 100 CASK SYSTEM

Component	Reference ASME Code Section/Article	Code Requirement	Alternative, Justification & Compensatory Measures
MPC basket assembly	NG-4420	NG-4427(a) allows a fillet weld in any single continuous weld to be less than the specified fillet weld dimension by not more than 1/16 inch, provided that the total undersize portion of the weld does not exceed 10 percent of the length of the weld. Individual undersize weld portions shall not exceed 2 inches in length.	Modify the Code requirement (intended for core support structures) with the following text prepared to accord with the geometry and stress analysis imperatives for the fuel basket: For the longitudinal MPC basket fillet welds, the following criteria apply: 1) The specified fillet weld throat dimension must be maintained over at least 92 percent of the total weld length. All regions of undersized weld must be less than 3 inches long and separated from each other by at least 9 inches. 2) Areas of undercuts and porosity beyond that allowed by the applicable ASME Code shall not exceed 1/2 inch in weld length. The total length of undercut and porosity over any 1-foot length shall not exceed 2 inches. 3) The total weld length in which items (1) and (2) apply shall not exceed a total of 10 percent of the overall weld length. The limited access of the MPC basket panel longitudinal fillet welds makes it difficult to perform effective repairs of these welds and creates the potential for causing additional damage to the basket assembly (e.g., to the neutron absorber and its sheathing) if repairs are attempted. The acceptance criteria provided in the foregoing have been established to comport with the objectives of the basket design and preserve the margins demonstrated in the supporting stress analysis. From the structural standpoint, the weld acceptance criteria are established to ensure that any departure from the ideal, continuous fillet weld seam would not alter the primary bending stresses on which the design of the fuel baskets is predicated. Stated differently, the permitted weld discontinuities are limited in size to ensure that they remain classifiable as local stress elevators ("peak stress", F, in the ASME Code for which specific stress intensity limits do not apply).
MPC Basket Assembly	NG-8000	States requirements for nameplates, stamping and reports per NCA-8000.	The HI-STORM100 System is to be marked and identified in accordance with 10CFR71 and 10CFR72 requirements. Code stamping is not required. The MPC basket data package to be in accordance with Holtec approved QA program.
OVERPACK Steel Structure	NF-2000	Requires materials to be supplied by ASME-approved material supplier.	Materials will be supplied by Holtec-approved supplier with CMTRs in accordance with NF-2000 requirements.

Table 3-1 (page 8 of 9)
LIST OF ASME CODE ALTERNATIVES FOR HI-STORM 100 CASK SYSTEM

Component	Reference ASME Code Section/Article	Code Requirement	Alternative, Justification & Compensatory Measures
TRANSFER CASK Steel Structure	NF-2000	Requires materials to be supplied by ASME-approved material supplier.	Materials will be supplied by Holtec-approved supplier with CMTRs in accordance with NF-2000 requirements.
OVERPACK Baseplate and Lid Top Plate	NF-4441	Requires special examinations or requirements for welds where a primary member of thickness 1 inch or greater is loaded to transmit loads in the through thickness direction.	The margins of safety in these welds under loads experienced during lifting operations or accident conditions are quite large. The OVERPACK baseplate welds to the inner shell, pedestal shell, and radial plates are only loaded during lifting conditions and have large safety factors during lifting. Likewise, the top lid plate to lid shell weld has a large structural margin under the inertia loads imposed during a non-mechanistic tipover event.
OVERPACK Steel Structure	NF-3256 NF-3266	Provides requirements for welded joints.	Welds for which no structural credit is taken are identified as "Non-NF" welds in the design drawings. These non-structural welds are specified in accordance with the pre-qualified welds of AWS D1.1. These welds shall be made by welders and weld procedures qualified in accordance with AWS D1.1 or ASME Section IX. Welds for which structural credit is taken in the safety analyses shall meet the stress limits for NF-3256.2, but are not required to meet the joint configuration requirements specified in these Code articles. The geometry of the joint designs in the cask structures are based on the fabricability and accessibility of the joint, not generally contemplated by this Code section governing supports.

Table 3-1 (page 9 of 9)
LIST OF ASME CODE ALTERNATIVES FOR HI-STORM 100 CASK SYSTEM

Component	Reference ASME Code Section/Article	Code Requirement	Alternative, Justification & Compensatory Measures
HI-STORM OVERPACK and HI-TRAC TRANSFER CASK	NF-3320 NF-4720	NF-3324.6 and NF-4720 provide requirements for bolting	These Code requirements are applicable to linear structures wherein bolted joints carry axial, shear, as well as rotational (torsional) loads. The OVERPACK and TRANSFER CASK bolted connections in the structural load path are qualified by design based on the design loadings defined in the FSAR. Bolted joints in these components see no shear or torsional loads under normal storage conditions. Larger clearances between bolts and holes may be necessary to ensure shear interfaces located elsewhere in the structure engage prior to the bolts experiencing shear loadings (which occur only during side impact scenarios). Bolted joints that are subject to shear loads in accident conditions are qualified by appropriate stress analysis. Larger bolt-to-hole clearances help ensure more efficient operations in making these bolted connections, thereby minimizing time spent by operations personnel in a radiation area. Additionally, larger bolt-to-hole clearances allow interchangeability of the lids from one particular fabricated cask to another.

DESIGN FEATURES (continued)

3.4 Site-Specific Parameters and Analyses

Site-specific parameters and analyses that will require verification by the system user are, as a minimum, as follows:

1. The temperature of 80° F is the maximum average yearly temperature.

2. The allowed temperature extremes, averaged over a 3-day period, shall be greater than -40° F and less than 125° F.

3. a. For free-standing casks, the resultant horizontal acceleration (vectorial sum of two horizontal Zero Period Accelerations (ZPAs) at a three-dimensional seismic site), G_H, and vertical ZPA, G_V, expressed as fractions of 'g', shall satisfy the following inequality:

$$G_H + \mu G_V \leq \mu$$

where μ is either the Coulomb friction coefficient for the HI-STORM 100/ISFSI pad interface or the ration r/h, where 'r' is the radius of the cask and 'h' is the height of the cask center-of-gravity above the ISFSI pad surface. The above inequality must be met for both definitions of μ. Unless demonstrated by appropriate testing that a higher coefficient of friction value is appropriate for a specific ISFSI, the value used shall be 0.53. Representative values of G_H and G_V combinations for a coefficient of friction = 0.53 to prevent sliding are provided in Table 3-2. If acceleration time-histories on the ISFSI pad surface are available, G_H and G_V may be the coincident values of the instantaneous net horizontal and vertical accelerations. If instantaneous accelerations are used, the inequality shall be evaluated at each time step in the acceleration time history over the total duration of the seismic event.

Table 3-2

Representative DBE Acceleration Values to Prevent HI-STORM 100 Sliding (μ = 0.53)

Equivalent Vectorial Sum of Two Horizontal ZPA's (G_H in g's)	Corresponding Vertical ZPA (G_V in g's)
0.445	0.160
0.424	0.200
0.397	0.250

(continued)

DESIGN FEATURES

3.4 Site-Specific Parameters and Analyses (continued)

b. For those ISFSI sites with design basis seismic acceleration values higher than those allowed for free-standing casks, the HI-STORM 100 System shall be anchored to the ISFSI pad. The site seismic characteristics and the anchorage system shall meet the following requirements:

i. The site acceleration response spectra at the top of the ISFSI pad shall have ZPAs that meet the following inequalities:

$$G_H \leq 2.12$$

AND

$$G_V \leq 1.5$$

Where:

G_H is the vectorial sum of the two horizontal ZPAs at a three-dimensional seismic site (or the horizontal ZPA at a two-dimensional site) and G_V is the vertical ZPA.

ii. Each HI-STORM 100 dry storage cask shall be anchored with twenty-eight (28), 2-inch diameter studs and compatible nuts of material suitable for the expected ISFSI environment. The studs shall meet the following requirements:

Yield Strength at Ambient Temperature: $\geq$ 80 ksi

Ultimate Strength at Ambient Temperature: $\geq$ 125 ksi

Initial Tensile Pre-Stress: $\geq$ 55 ksi AND $\leq$ 65 ksi

NOTE: The above anchorage specifications are required for the seismic spectra defined in item 3.4.3.b.i. Users may use fewer studs or those of different diameter to account for site-specific seismic spectra less severe than those specified above. The embedment design shall comply with Appendix B of ACI-349-97. A later edition of this Code may be used, provided a written reconciliation is performed.

iii. Embedment Concrete Compressive Strength: $\geq$ 4,000 psi at 28 days

(continued)

DESIGN FEATURES

3.4 Site-Specific Parameters and Analyses (continued)

4. The analyzed flood condition of 15 fps water velocity and a height of 125 feet of water (full submergence of the loaded cask) are not exceeded.

5. The potential for fire and explosion shall be addressed, based on site-specific considerations. This includes the condition that the on-site transporter fuel tank will contain no more than 50 gallons of diesel fuel while handling a loaded OVERPACK or TRANSFER CASK.

6. a. For free-standing casks, the ISFSI pad shall be verified by analysis to limit cask deceleration during design basis drop and non-mechanistic tip-over events to ≤ 45 g's at the top of the MPC fuel basket. Analyses shall be performed using methodologies consistent with those described in the HI-STORM 100 FSAR. A lift height above the ISFSI pad is not required to be established if the cask is lifted with a device designed in accordance with ANSI N14.6 and having redundant drop protection features.

   b. For anchored casks, the ISFSI pad shall be designed to meet the embedment requirements of the anchorage design. A cask tip-over event for an anchored cask is not credible. The ISFSI pad shall be verified by analysis to limit cask deceleration during a design basis drop event to ≤ 45 g's at the top of the MPC fuel basket, except as provided for in this paragraph below. Analyses shall be performed using methodologies consistent with those described in the HI-STORM 100 FSAR. A lift height above the ISFSI pad is not required to be established if the cask is lifted with a device design in accordance with ANSI N14.6 and having redundant drop protection features.

7. In cases where engineered features (i.e., berms and shield walls) are used to ensure that the requirements of 10CFR72.104(a) are met, such features are to be considered important to safety and must be evaluated to determine the applicable Quality Assurance Category.

(continued)

DESIGN FEATURES

3.4 Site-Specific Parameters and Analyses (continued)

7. In cases where engineered features (i.e., berms and shield walls) are used to ensure that the requirements of 10CFR72.104(a) are met, such features are to be considered important to safety and must be evaluated to determine the applicable Quality Assurance Category.

8. LOADING OPERATIONS, TRANSPORT OPERATIONS, and UNLOADING OPERATIONS shall only be conducted with working area ambient temperatures $\geq$ 0° F.

9. For those users whose site-specific design basis includes an event or events (e.g., flood) that result in the blockage of any OVERPACK inlet or outlet air ducts for an extended period of time (i.e, longer than the total Completion Time of LCO 3.1.2), an analysis or evaluation may be performed to demonstrate adequate heat removal is available for the duration of the event. Adequate heat removal is defined as fuel cladding temperatures remaining below the short term temperature limit. If the analysis or evaluation is not performed, or if fuel cladding temperature limits are unable to be demonstrated by analysis or evaluation to remain below the short term temperature limit for the duration of the event, provisions shall be established to provide alternate means of cooling to accomplish this objective.

10. For on-site TRANSPORT OPERATIONS with a loaded TRANSFER CASK, the requirements in Table 3-2a apply.

(continued)

Table 3-2a
TRANSFER CASK Operating Limits (Notes 1 and 2)

TRANSFER CASK Orientation	MPC Heat Load (kW)	Annulus Cooling Required?
Vertical	≤ 23	No
Vertical	> 23	Yes
Horizontal	≤ 19	No
Horizontal	> 19	Yes

Notes:

1. See FSAR Section 4.5 for examples of annulus cooling.

2. For short duration (≤ 6 hours) changes in orientation (e.g., vertical to horizontal to facilitate traversing a doorway), it is not necessary to change cooling requirements.

(continued)

DESIGN FEATURES

3.5 Cask Transfer Facility (CTF)

3.5.1 TRANSFER CASK and MPC Lifters

Lifting of a loaded TRANSFER CASK and MPC using devices that are not integral to structures governed by 10 CFR Part 50 shall be performed with a CTF that is designed, operated, fabricated, tested, inspected, and maintained in accordance with the guidelines of NUREG-0612, "Control of Heavy Loads at Nuclear Power Plants" and the below clarifications. The CTF Structure requirements below do not apply to heavy loads bounded by the regulations of 10 CFR Part 50.

3.5.2 CTF Structure Requirements

3.5.2.1 Cask Transfer Station and Stationary Lifting Devices

1. The metal weldment structure of the CTF structure shall be designed to comply with the stress limits of ASME Section III, Subsection NF, Class 3 for linear structures. The applicable loads, load combinations, and associated service condition definitions are provided in Table 3-3. All compression loaded members shall satisfy the buckling criteria of ASME Section III, Subsection NF.

2. If a portion of the CTF structure is constructed of reinforced concrete, then the factored load combinations set forth in ACI-318 (89) for the loads defined in Table 3-3 shall apply.

3. The TRANSFER CASK and MPC lifting device used with the CTF shall be designed, fabricated, operated, tested, inspected and maintained in accordance with NUREG-0612, Section 5.1.

4. The CTF shall be designed, constructed, and evaluated to ensure that if the MPC is dropped during inter-cask transfer operations, its confinement boundary would not be breached. This requirements applies to CTFs with either stationary or mobile lifting devices.

(continued)

DESIGN FEATURES

3.5.2.2 Mobile Lift Devices

If a mobile lifting device is used as the lifting device, in lieu of a stationary lifting device, is shall meet the guidelines of NUREG- 0612, Section 5.1, with the following clarifications:

1. Mobile lifting devices shall have a minimum safety factor of two over the allowable load table for the lifting device in accordance with the guidance of NUREG-0612, Section 5.1.6(1)(a) and shall be capable of stopping and holding the load during a Design Basis Earthquake (DBE) event.

2. Mobile lifting devices shall conform to meet the requirements of ANSI B30.5, "Mobile and Locomotive Cranes," in lieu of the requirements of ANSI B30.2, "Overhead and Gantry Cranes."

3. Mobile cranes are not required to meet the requirements of NUREG-0612, Section 5.1.6(2) for new cranes.

4. Horizontal movements of the TRANSFER CASK and MPC using a mobile crane are prohibited.

(continued)

DESIGN FEATURES

Table 3-3

Load Combinations and Service Condition Definitions for the CTF Structure (Note 1)

Load Combination	ASME III Service Condition for Definition of Allowable Stress	Comment
D* D + S	Level A	All primary load bearing members must satisfy Level A stress limits
D + M + W' (Note 2) D + F D + E D + Y	Level D	Factor of safety against overturning shall be ≥ 1.1

D = Dead load
D* = Apparent dead load
S = Snow and ice load for the CTF site
M = Tornado missile load for the CTF site
W' = Tornado wind load for the CTF site
F = Flood load for the CTF site
E = Seismic load for the CTF site
Y = Tsunami load for the CTF site

Notes:
1. The reinforced concrete portion of the CTF structure shall also meet the factored combinations of loads set forth in ACI-318(89).
2. Tornado missile load may be reduced or eliminated based on a PRA for the CTF site.

DESIGN FEATURES

3.6 Forced Helium Dehydration System

3.6.1 System Description

Use of the Forced Helium Dehydration (FHD) system, (a closed-loop system) is an alternative to vacuum drying the MPC for moderate burnup fuel (≤ 45,000 MWD/MTU) and mandatory for drying MPCs containing one or more high burnup fuel assemblies. The FHD system shall be designed for normal operation (i.e., excluding startup and shutdown ramps) in accordance with the criteria in Section 3.6.2.

3.6.2 Design Criteria

3.6.2.1 The temperature of the helium gas in the MPC shall be at least 15°F higher than the saturation temperature at coincident pressure.

3.6.2.2 The pressure in the MPC cavity space shall be ≤ 60.3 psig (75 psia).

3.6.2.3 The hourly recirculation rate of helium shall be ≥ 10 times the nominal helium mass backfilled into the MPC for fuel storage operations.

3.6.2.4 The partial pressure of the water vapor in the MPC cavity will not exceed 3 torr. The limit will be met if the gas temperature at the demoisturizer outlet is verified by measurement to remain ≤ 21°F for a period of 30 minutes or if the dew point of the gas exiting the MPC is verified by measurement to remain ≤ 22.9°F for ≥ 30 minutes.

3.6.2.5 The condensing module shall be designed to de-vaporize the recirculating helium gas to a dew point ≤ 120°F.

3.6.2.6 The demoisturizing module shall be configured to be introduced into its helium conditioning function after the condensing module has been operated for the required length of time to assure that the bulk moisture vaporization in the MPC (defined as Phase 1 in FSAR Appendix 2.B) has been completed.

3.6.2.7 The helium circulator shall be sized to effect the minimum flow rate of circulation required by these design criteria.

3.6.2.8 The pre-heater module shall be engineered to ensure that the temperature of the helium gas in the MPC meets these design criteria.

(continued)

DESIGN FEATURES

3.6 Forced Helium Dehydration System (continued)

3.6.3 Fuel Cladding Temperature

A steady-state thermal analysis of the MPC under the forced helium flow scenario shall be performed using the methodology described in HI-STORM 100 FSAR Section 4.4, with due recognition of the forced convection process during FHD system operation. This analysis shall demonstrate that the peak temperature of the fuel cladding under the most adverse condition of FHD system operation, is below the peak cladding temperature limit for normal conditions of storage for the applicable fuel type (PWR or BWR) and cooling time at the start of dry storage.

HI-STORM 100 FSAR
TABLE OF CONTENTS

LIST OF FIGURES

LIST OF EFFECTIVE PAGES FOR HI-STORM 100 FSAR PROPOSED REVISION 2B

Page	Revision		Page	Revision
i	2B			
ii	2A			
iii	2B			
iv	2B			
v	2B			
vi	2B			
vii	2B			
viii	2B			
ix	2B			
x	2B			
xi	2B			
xii	2B			
xiii	2B			
xiv	2B			
xv	2B			
xvi	2B			
xvii	2B			
xviii	2B			
xix	2B			
xx	2B			
xxi	2B			
xxii	2B			
xxiii	2B			
xxiv	2B			
xxv	2B			
xxvi	2B			
xxvii	2B			
xxviii	2B			
xxix	2B			
xxx	2B			
xxxi	2B			
xxxii	2B			
xxxiii	2B			
xxxiv	2B			
xxxv	2B			

LIST OF EFFECTIVE PAGES FOR HI-STORM 100 FSAR PROPOSED REVISION 2B

Page	Revision		Page	Revision
1.0-1	2B		1.2-10	2B
1.0-2	2B		1.2-11	2B
1.0-3	2B		1.2-12	2B
1.0-4	2B		1.2-13	2B
1.0-5	2B		1.2-14	2B
1.0-6	2B		1.2-15	2B
1.0-7	2B		1.2-16	2B
1.0-8	2B		1.2-17	2B
1.0-9	2B		1.2-18	2B
1.0-10	2B		1.2-19	2B
1.0-11	2B		1.2-20	2B
1.0-12	2B		1.2-21	2B
1.0-13	2B		1.2-22	2B
1.0-14	2B		1.2-23	2B
1.0-15	2B		1.2-24	2B
1.0-16	2B		1.2-25	2B
1.0-17	2B		1.2-26	2B
1.0-18	2B		1.2-27	2B
1.0-19	2B		1.2-28	2B
1.0-20	2B		1.2-29	2B
1.0-21	2B		1.2-30	2B
1.0-22	2B		1.2-31	2B
1.0-23	2B		1.2-32	2B
1.0-24	2B		1.2-33	2B
1.0-25	2B		1.2-34	2B
1.0-26	2B		1.2-35	2B
1.0-27	2B		1.2-36	2B
1.0-28	2B		1.2-37	2B
1.0-29	2B		1.2-38	2B
1.0-30	2B		1.2-39	2B
1.0-31	2B		1.2-40	2B
1.1-1	2A		1.2-41	2B
1.1-2	2A		Fig. 1.2.1	1
1.1-3	2A		Fig. 1.2.1A	1
1.1-4	2A		Fig. 1.2.2	1
Fig. 1.1.1	0		Fig. 1.2.3	2B
Fig. 1.1.1A	1		Fig. 1.2.4	1
Fig. 1.1.2	0		Fig. 1.2.5	0
Fig. 1.1.3	1		Fig. 1.2.6	0
Fig. 1.1.3A	1		Fig. 1.2.7	1
Fig. 1.1.4	1		Fig. 1.2.8	1
Fig. 1.1.5	1		Fig. 1.2.8A	1
1.2-1	2B		Fig. 1.2.9	1
1.2-2	2B		Fig. 1.2.10	0
1.2-3	2B		Fig. 1.2.11	0
1.2-4	2B		Fig. 1.2.12	0
1.2-5	2B		Fig. 1.2.16a	0
1.2-6	2B		Fig. 1.2.16b	0
1.2-7	2B		Fig. 1.2.16c	0
1.2-8	2B		Fig. 1.2.16d	0
1.2-9	2B		Fig. 1.2.16e	0

LIST OF EFFECTIVE PAGES FOR HI-STORM 100 FSAR PROPOSED REVISION 2B

Page	Revision		Page	Revision
Fig. 1.2.16f	0			
Fig. 1.2.17a	0			
Fig. 1.2.17b	0			
Fig. 1.2.17c	0			
Fig. 1.2.17d	0			
Fig. 1.2.18	1			
1.3-1	2B			
1.4-1	1			
1.4-2	1			
1.4-3	1			
Fig. 1.4.1	0			
Fig. 1.4.2	0			
1.5-1	1			
1.5-2	1			
Drawings	See Section 1.5			
Bills-of-Material	See Section 1.5			
1.6-1	2B			
1.6-2	2B			
1.A-1	1			
1.A-2	1			
1.A-3	1			
1.A-4	1			
1.A-5	1			
1.A-6	1			
1.A-7	1			
Fig. 1.A.1	0			
Fig. 1.A.2	0			
Fig. 1.A-3	0			
Fig. 1.A.4	0			
Fig. 1.A.5	0			
1.B-1	2B			
1.B-2	2B			
1.B-3	2B			
1.C-1	1			
1.C-3	0			
1.C-4	0			
1.D-1	2B			
1.D-2	2B			
1.D-3	2B			
1.D-4	2B			
1.D-5	2B			

LIST OF EFFECTIVE PAGES FOR HI-STORM 100 FSAR PROPOSED REVISION 2B

Page	Revision		Page	Revision
2.0-1	2B		2.1-14	2B
2.0-2	2B		2.1-15	2B
2.0-3	2B		2.1-16	2B
2.0-4	2B		2.1-17	2B
2.0-5	2B		2.1-18	2B
2.0-6	2B		2.1-19	2B
2.0-7	2B		2.1-20	2B
2.0-8	2B		2.1-21	2B
2.0-9	2B		2.1-22	2B
2.0-10	2B		2.1-23	2B
2.0-11	2B		2.1-24	2B
2.0-12	2B		2.1-25	2B
2.0-13	2B		2.1-26	2B
2.0-14	2B		2.1-27	2B
2.0-15	2B		2.1-28	2B
2.0-16	2B		2.1-29	2B
2.0-17	2B		2.1-30	2B
2.0-18	2B		2.1-31	2B
2.0-19	2B		2.1-32	2B
2.0-20	2B		2.1-33	2B
2.0-21	2B		2.1-34	2B
2.0-22	2B		2.1-35	2B
2.0-23	2B		2.1-36	2B
2.0-24	2B		2.1-37	2B
2.0-25	2B		2.1-38	2B
2.0-26	2B		2.1-39	2B
2.0-27	2B		2.1-40	2B
2.0-28	2B		2.1-41	2B
2.0-29	2B		2.1-42	2B
2.0-30	2B		2.1-43	2B
2.0-31	2B		2.1-44	2B
2.0-32	2B		2.1-45	2B
2.0-33	2B		2.1-46	2B
2.0-34	2B		2.1-47	2B
2.0-35	2B		2.1-48	2B
2.0-36	2B		2.1-49	2B
2.0-37	2B		2.1-50	2B
2.0-38	2B		2.1-51	2B
2.1-1	2B		2.1-52	2B
2.1-2	2B		2.1-53	2B
2.1-3	2B		2.1-54	2B
2.1-4	2B		2.1-55	2B
2.1-5	2B		2.1-56	2B
2.1-6	2B		2.1-57	2B
2.1-7	2B		2.1-58	2B
2.1-8	2B		2.1-59	2B
2.1-9	2B		2.1-60	2B
2.1-10	2B		2.1-61	2B
2.1-11	2B		2.1-62	2B
2.1-12	2B		2.1-63	2B
2.1-13	2B		2.1-64	2B

LIST OF EFFECTIVE PAGES FOR HI-STORM 100 FSAR PROPOSED REVISION 2B

Page	Revision		Page	Revision
2.1-65	2B		2.2-36	2B
2.1-66	2B		2.2-37	2B
2.1-67	2B		2.2-38	2B
2.1-68	2B		2.2-39	2B
2.1-69	2B		2.2-40	2B
2.1-70	2B		2.2-41	2B
Fig. 2.1.1	2B		2.2-42	2B
Fig. 2.1.2	1		2.2-43	2B
Fig. 2.1.2A	1		2.2-44	2B
Fig. 2.1.2B	1		2.2-45	2B
Fig. 2.1.2C	1		2.2-46	2B
Fig. 2.1.2D	2B		2.2-47	2B
Fig. 2.1.3	0		2.2-48	2B
Fig. 2.1.4	0		2.2-49	2B
Fig. 2.1.5	0		2.2-50	2B
Fig. 2.1.9	2A		2.2-51	2B
2.2-1	2B		2.2-52	2B
2.2-2	2B		2.2-53	2B
2.2-3	2B		2.2-54	2B
2.2-4	2B		2.2-55	2B
2.2-5	2B		2.2-56	2B
2.2-6	2B		2.2-57	2B
2.2-7	2B		2.3-1	2B
2.2-8	2B		2.3-2	2B
2.2-9	2B		2.3-3	2B
2.2-10	2B		2.3-4	2B
2.2-11	2B		2.3-5	2B
2.2-12	2B		2.3-6	2B
2.2-13	2B		2.3-7	2B
2.2-14	2B		2.3-8	2B
2.2-15	2B		2.3-9	2B
2.2-16	2B		2.3-10	2B
2.2-17	2B		2.3-11	2B
2.2-18	2B		2.3-12	2B
2.2-19	2B		2.3-13	2B
2.2-20	2B		2.3-14	2B
2.2-21	2B		2.3-15	2B
2.2-22	2B		2.3-16	2B
2.2-23	2B		2.3-17	2B
2.2-24	2B		2.3-18	2B
2.2-25	2B		2.3-19	2B
2.2-26	2B		2.3-20	2B
2.2-27	2B		2.3-21	2B
2.2-28	2B		2.3-22	2B
2.2-29	2B		2.3-23	2B
2.2-30	2B		Fig. 2.3.1	0
2.2-31	2B		Fig. 2.3.2	0
2.2-32	2B		Fig. 2.3.3	0
2.2-33	2B		Fig. 2.3.4	0
2.2-34	2B			
2.2-35	2B			

LIST OF EFFECTIVE PAGES FOR HI-STORM 100 FSAR PROPOSED REVISION 2B

Page	Revision		Page	Revision
2.4-1	2A			
2.4-2	2A			
2.4-3	2A			
2.5-1	0			
2.6-1	2A			
2.6-2	2A			
2.6-3	2A			
2A-1	1			
2A-2	1			
2A-3	1			
2A-4	1			
2A-5	1			
Fig. 2.A.1	1			
2.B-1	2B			
2.B-2	2B			
2.B-3	2B			
2.B-4	2B			
Fig. 2.B.1	1			

LIST OF EFFECTIVE PAGES FOR HI-STORM 100 FSAR PROPOSED REVISION 2B

Page	Revision		Page	Revision
3.0-1	2B		3.1-43	2B
3.0-2	2B		Fig. 3.1.1	1
3.0-3	2B		Fig. 3.1.2	1
3.0-4	2B		Fig. 3.1.3	1
3.0-5	2B		3.2-1	1
3.0-6	2B		3.2-2	1
3.0-7	2B		3.2-3	1
3.0-8	2B		3.2-4	1
3.0-9	2B		3.2-5	1
3.0-10	2B		3.2-6	1
3.1-1	2B		3.2-7	1
3.1-2	2B		3.2-8	1
3.1-3	2B		3.2-9	1
3.1-4	2B		3.2-10	1
3.1-5	2B		3.2-11	1
3.1-6	2B		3.2-12	1
3.1-7	2B		3.3-1	1
3.1-8	2B		3.3-2	1
3.1-9	2B		3.3-3	1
3.1-10	2B		3.3-4	1
3.1-11	2B		3.3-5	1
3.1-12	2B		3.3-6	1
3.1-13	2B		3.3-7	1
3.1-14	2B		3.3-8	1
3.1-15	2B		3.3-9	1
3.1-16	2B		3.3-10	Deleted
3.1-17	2B		3.4-1	2B
3.1-18	2B		3.4-2	2B
3.1-19	2B		3.4-3	2B
3.1-20	2B		3.4-4	2B
3.1-21	2B		3.4-5	2B
3.1-22	2B		3.4-6	2B
3.1-23	2B		3.4-7	2B
3.1-24	2B		3.4-8	2B
3.1-25	2B		3.4-9	2B
3.1-26	2B		3.4-10	2B
3.1-27	2B		3.4-11	2B
3.1-28	2B		3.4-12	2B
3.1-29	2B		3.4-13	2B
3.1-30	2B		3.4-14	2B
3.1-31	2B		3.4-15	2B
3.1-32	2B		3.4-16	2B
3.1-33	2B		3.4-17	2B
3.1-34	2B		3.4-18	2B
3.1-35	2B		3.4-19	2B
3.1-36	2B		3.4-20	2B
3.1-37	2B		3.4-21	2B
3.1-38	2B		3.4-22	2B
3.1-39	2B		3.4-23	2B
3.1-40	2B		3.4-24	2B
3.1-41	2B		3.4-25	2B
3.1-42	2B		3.4-26	2B

LIST OF EFFECTIVE PAGES FOR HI-STORM 100 FSAR PROPOSED REVISION 2B

Page	Revision		Page	Revision
3.4-27	2B		3.4-79	2B
3.4-28	2B		3.4-80	2B
3.4-29	2B		3.4-81	2B
3.4-30	2B		3.4-82	2B
3.4-31	2B		3.4-83	2B
3.4-32	2B		3.4-84	2B
3.4-33	2B		3.4-85	2B
3.4-34	2B		3.4-86	2B
3.4-35	2B		3.4-87	2B
3.4-36	2B		3.4-88	2B
3.4-37	2B		3.4-89	2B
3.4-38	2B		3.4-90	2B
3.4-39	2B		3.4-91	2B
3.4-40	2B		3.4-92	2B
3.4-41	2B		3.4-93	2B
3.4-42	2B		3.4-94	2B
3.4-43	2B		3.4-95	2B
3.4-44	2B		3.4-96	2B
3.4-45	2B		3.4-97	2B
3.4-46	2B		3.4-98	2B
3.4-47	2B		3.4-99	2B
3.4-48	2B		3.4-100	2B
3.4-49	2B		3.4-101	2B
3.4-50	2B		3.4-102	2B
3.4-51	2B		3.4-103	2B
3.4-52	2B		3.4-104	2B
3.4-53	2B		3.4-105	2B
3.4-54	2B		3.4-106	2B
3.4-55	2B		3.4-107	2B
3.4-56	2B		3.4-108	2B
3.4-57	2B		3.4-109	2B
3.4-58	2B		3.4-110	2B
3.4-59	2B		3.4-111	2B
3.4-60	2B		3.4-112	2B
3.4-61	2B		3.4-113	2B
3.4-62	2B		3.4-114	2B
3.4-63	2B		3.4-115	2B
3.4-64	2B		3.4-116	2B
3.4-65	2B		3.4-117	2B
3.4-66	2B		3.4-118	2B
3.4-67	2B		3.4-119	2B
3.4-68	2B		3.4-120	2B
3.4-69	2B		3.4-121	2B
3.4-70	2B		3.4-122	2B
3.4-71	2B		3.4-123	2B
3.4-72	2B		3.4-124	2B
3.4-73	2B		3.4-125	2B
3.4-74	2B		3.4-126	2B
3.4-75	2B		Fig. 3.4.1	0
3.4-76	2B		Fig. 3.4.2	1
3.4-77	2B		Fig. 3.4.3	0
3.4-78	2B			

LIST OF EFFECTIVE PAGES FOR HI-STORM 100 FSAR PROPOSED REVISION 2B

Page	Revision		Page	Revision
Fig. 3.4.4	0		3.5-4	0
Fig. 3.4.5	1		3.5-5	0
Fig. 3.4.6	0		3.5-6	0
Fig. 3.4.7	0		3.5-7	0
Fig. 3.4.8	0		3.5-8	0
Fig. 3.4.9	0		3.5-9	0
Fig. 3.4.10	1		3.5-10	0
Fig. 3.4.11	0		3.5-11	0
Fig. 3.4.12	0		3.5-12	0
Fig. 3.4.13	0		3.5-13	0
Fig. 3.4.14	0		3.5-14	0
Fig. 3.4.15	0		3.5-15	0
Fig. 3.4.16	0		3.5-16	0
Fig. 3.4.16a	0		3.5-17	0
Fig. 3.4.16b	0		3.5-18	0
Fig. 3.4.17	0		3.5-19	0
Fig. 3.4.18	0		Fig. 3.5.1	0
Fig. 3.4.19	0		Fig. 3.5.2	0
Fig. 3.4.20	0		Fig. 3.5.3	0
Fig. 3.4.21	0		Fig. 3.5.4	0
Fig. 3.4.22	0		Fig. 3.5.5	0
Fig. 3.4.23	0		Fig. 3.5.6	0
Fig. 3.4.24	0		Fig. 3.5.7	0
Fig. 3.4.25	0		Fig. 3.5.8	0
Fig. 3.4.26	0		Fig. 3.5.9	0
Fig. 3.4.27	0		3.6-1	2A
Fig. 3.4.28	0		3.6-2	2A
Fig. 3.4.29	0		3.6-3	2A
Fig. 3.4.30	1		3.6-4	2A
Fig. 3.4.31	1		3.6-5	2A
Fig. 3.4.32	1		3.6-6	2A
Fig. 3.4.33	1		3.6-7	2A
Fig. 3.4.34	1		3.6-8	2A
Fig. 3.4.35	1		3.6-9	2A
Fig. 3.4.36	1		3.7-1	2A
Fig. 3.4.37	1		3.7-2	2A
Fig. 3.4.38	1		3.7-3	2A
Fig. 3.4.39	1		3.7-4	2A
Fig. 3.4.40	1		3.7-5	2A
Fig. 3.4.41	1		3.7-6	2A
Fig. 3.4.42	1		3.7-7	2A
Fig. 3.4.43	1		3.7-8	2A
Fig. 3.4.44	1		3.7-9	2A
Fig. 3.4.45	1		3.7-10	2A
Fig. 3.4.46	1		3.8-1	1
Fig. 3.4.47	1		3.8-2	1
Fig. 3.4-48	1		3.A-1	1
Fig. 3.4-49	1		3.A-2	1
3.5-1	0		3.A-3	1
3.5-2	0		3.A-4	1
3.5-3	0		3.A-5	1

LIST OF EFFECTIVE PAGES FOR HI-STORM 100 FSAR PROPOSED REVISION 2B

Page	Revision		Page	Revision
3.A-6	1		3.B-24	Deleted
3.A-7	1		3.B-25	Deleted
3.A-8	1		3.B-26	Deleted
3.A-9	1		3.B-27	Deleted
3.A-10	1		3.B-28	Deleted
3.A-11	1		3.B-29	Deleted
3.A-12	1		3.B-30	Deleted
3.A-13	1		3.B-31	Deleted
3.A-14	1		3.B-32	Deleted
3.A-15	1		3.B-33	Deleted
Fig. 3.A.1	0		3.B-34	Deleted
Fig. 3.A.2	0		3.B-35	Deleted
Fig. 3.A.3	0		3.B-36	Deleted
Fig. 3.A.4	0		3.B-37	Deleted
Fig. 3.A.5	0		3.B-38	Deleted
Fig. 3.A.6	0		3.B-39	Deleted
Fig. 3.A.7	0		3.B-40	Deleted
Fig. 3.A.8	0		3.B-41	Deleted
Fig. 3.A.9	0		3.B-42	Deleted
Fig. 3.A.10	0		3.B-43	Deleted
Fig. 3.A.11	0		3.B-44	Deleted
Fig. 3.A.12	0		3.B-45	Deleted
Fig. 3.A.13	0		3.B-46	Deleted
Fig. 3.A.14	0		3.B-47	Deleted
Fig. 3.A.15	0		3.B-48	Deleted
Fig. 3.A.16	0		3.B-49	Deleted
Fig. 3.A.17	0		3.B-50	Deleted
Fig. 3.A.18	0		3.B-51	Deleted
3.B-1	Deleted		3.B-52	Deleted
3.B-2	Deleted		3.B-53	Deleted
3.B-3	Deleted		3.B-54	Deleted
3.B-4	Deleted		3.B-55	Deleted
3.B-5	Deleted		3.B-56	Deleted
3.B-6	Deleted		3.B-57	Deleted
3.B-7	Deleted		3.B-58	Deleted
3.B-8	Deleted		3.B-59	Deleted
3.B-9	Deleted		3.B-60	Deleted
3.B-10	Deleted		3.B-61	Deleted
3.B-11	Deleted		3.B-62	Deleted
3.B-12	Deleted		3.C-1	Deleted
3.B-13	Deleted		3.C-2	Deleted
3.B-14	Deleted		3.C-3	Deleted
3.B-15	Deleted		3.C-4	Deleted
3.B-16	Deleted		3.C-5	Deleted
3.B-17	Deleted		3.C-6	Deleted
3.B-18	Deleted		3.C-7	Deleted
3.B-19	Deleted		3.C-8	Deleted
3.B-20	Deleted		Fig. 3.C.1	Deleted
3.B-21	Deleted		Fig. 3.C.2	Deleted
3.B-22	Deleted		Fig. 3.C.3	Deleted
3.B-23	Deleted		3.D-1	Deleted
			3.D-2	Deleted

LIST OF EFFECTIVE PAGES FOR HI-STORM 100 FSAR PROPOSED REVISION 2B

Page	Revision		Page	Revision
3.D-3	Deleted		3.G-8	Deleted
3.D-4	Deleted		3.G-9	Deleted
3.D-5	Deleted		3.G-10	Deleted
3.D-6	Deleted		3.G-11	Deleted
3.D-7	Deleted		3.G-12	Deleted
3.D-8	Deleted		3.G-13	Deleted
3.D-9	Deleted		Fig. 3.G.1	Deleted
3.D-10	Deleted		Fig. 3.G.2	Deleted
3.D-11	Deleted		Fig. 3.G.3	Deleted
3.D-12	Deleted		Fig. 3.G.4	Deleted
3.D-13	Deleted		Fig. 3.G.5	Deleted
3.D-14	Deleted		3.H-1	Deleted
3.D-15	Deleted		3.H-2	Deleted
Fig. 3.D.1	Deleted		3.H-3	Deleted
Fig. 3.D.2a	Deleted		3.H-4	Deleted
Fig. 3.D.2b	Deleted		3.H-5	Deleted
Fig. 3.D.2c	Deleted		3.H-6	Deleted
Fig. 3.D.3	Deleted		3.H-7	Deleted
Fig. 3.D.4a	Deleted		Fig. 3.H.1	Deleted
Fig. 3.D.4b	Deleted		3.I-1	Deleted
Fig. 3.D.4c	Deleted		3.I-2	Deleted
Fig. 3.D.5a	Deleted		3.I-3	Deleted
Fig. 3.D.5b	Deleted		3.I-4	Deleted
Fig. 3.D.5c	Deleted		3.I-5	Deleted
3.E-1	Deleted		3.I-6	Deleted
3.E-2	Deleted		3.I-7	Deleted
3.E-3	Deleted		3.I-8	Deleted
3.E-4	Deleted		3.I-9	Deleted
3.E-5	Deleted		3.I-10	Deleted
3.E-6	Deleted		Fig. 3.I.1	Deleted
3.E-7	Deleted		Appendix 3.J	Deleted
3.E-8	Deleted		3.K-1	Deleted
3.E-9	Deleted		3.K-2	Deleted
3.E-10	Deleted		3.K-3	Deleted
Fig. 3.E.1	Deleted		3.K-4	Deleted
Fig. 3.E.2	Deleted		3.K-5	Deleted
Fig. 3.E.3	Deleted		3.K-6	Deleted
3.F-1	Deleted		3.K-7	Deleted
3.F-2	Deleted		3.L-1	Deleted
3.F-3	Deleted		3.L-2	Deleted
3.F-4	Deleted		3.L-3	Deleted
Fig. 3.F.1	Deleted		3.L-4	Deleted
Fig. 3.F.2	Deleted		3.L-5	Deleted
Fig. 3.F.3	Deleted		3.L-6	Deleted
Fig. 3.F.4	Deleted		3.L-7	Deleted
3.G-1	Deleted		3.L-8	Deleted
3.G-2	Deleted		3.L-9	Deleted
3.G-3	Deleted		3.L-10	Deleted
3.G-4	Deleted		3.L-11	Deleted
3.G-5	Deleted		3.L-12	Deleted
3.G-6	Deleted		3.L-13	Deleted
3.G-7	Deleted		3.M-1	Deleted

LIST OF EFFECTIVE PAGES FOR HI-STORM 100 FSAR PROPOSED REVISION 2B

Page	Revision		Page	Revision
3.M-2	Deleted		3.W-6	Deleted
3.M-3	Deleted		3.W-7	Deleted
3.M-4	Deleted		3.W-8	Deleted
3.M-5	Deleted		3.W-9	Deleted
3.M-6	Deleted		3.W-10	Deleted
3.M-7	Deleted		Fig. 3.W.1	Deleted
3.M-8	Deleted		3.X-1	Deleted
3.M-9	Deleted		3.X-2	Deleted
3.M-10	Deleted		3.X-3	Deleted
3.M-11	Deleted		3.X-4	Deleted
3.M-12	Deleted		3.X-5	Deleted
3.M-13	Deleted		3.X-6	Deleted
3.M-14	Deleted		3.X-7	Deleted
3.M-15	Deleted		3.X-8	Deleted
3.M-16	Deleted		3.X-9	Deleted
3.M-17	Deleted		3.X-10	Deleted
3.M-18	Deleted		Fig. 3.X.1	Deleted
3.M-19	Deleted		Fig. 3.X.2	Deleted
Appendix 3.N	Deleted in Rev 1		Fig. 3.X.3	Deleted
Appendix 3.O	Deleted in Rev 1		Fig. 3.X.4	Deleted
Appendix 3.P	Deleted in Rev 1		Fig. 3.X.5	Deleted
Appendix 3.Q	Deleted in Rev 1		3.Y-1	Deleted
Appendix 3.R	Deleted in Rev 1		3.Y-2	Deleted
Appendix 3.S	Deleted in Rev 1		3.Y-3	Deleted
Appendix 3.T	Deleted in Rev 1		3.Y-4	Deleted
3.U-1	Deleted		3.Y-5	Deleted
3.U-2	Deleted		3.Y-6	Deleted
3.U-3	Deleted		3.Y-7	Deleted
3.U-4	Deleted		3.Y-8	Deleted
3.U-5	Deleted		3.Y-9	Deleted
3.U-6	Deleted		3.Y-10	Deleted
3.U-7	Deleted		3.Y-11	Deleted
3.U-8	Deleted		3.Y-12	Deleted
3.U-9	Deleted		3.Y-13	Deleted
3.U-10	Deleted		3.Y-14	Deleted
Fig. 3.U.1	Deleted		3.Y-15	Deleted
3.V-1	Deleted		3.Y-16	Deleted
3.V-2	Deleted		3.Y-17	Deleted
3.V-3	Deleted		3.Y-18	Deleted
3.V-4	Deleted		3.Y-19	Deleted
3.V-5	Deleted		3.Y-20	Deleted
3.V-6	Deleted		Fig. 3.Y.1	Deleted
3.V-7	Deleted		Fig. 3.Y.2	Deleted
3.V-8	Deleted		3.Z-1	Deleted
3.V-9	Deleted		3.Z-2	Deleted
3.V-10	Deleted		3.Z-3	Deleted
Fig. 3.V.1	Deleted		3.Z-4	Deleted
3.W-1	Deleted		3.Z-5	Deleted
3.W-2	Deleted		3.Z-6	Deleted
3.W-3	Deleted		3.Z-7	Deleted
3.W-4	Deleted		3.Z-8	Deleted
3.W-5	Deleted		3.Z-9	Deleted

LIST OF EFFECTIVE PAGES FOR HI-STORM 100 FSAR PROPOSED REVISION 2B

Page	Revision		Page	Revision
3.Z-10	Deleted		3.AD-2	Deleted
3.Z-11	Deleted		3.AD-3	Deleted
3.Z-12	Deleted		3.AD-4	Deleted
Fig. 3.Z.1	Deleted		3.AD-5	Deleted
Fig. 3.Z.2	Deleted		3.AD-6	Deleted
Fig. 3.Z.3	Deleted		3.AD-7	Deleted
Fig. 3.Z.4	Deleted		3.AD-8	Deleted
Fig. 3.Z.5	Deleted		3.AD-9	Deleted
Fig. 3.Z.6	Deleted		3.AD-10	Deleted
3.AA-1	Deleted		3.AD-11	Deleted
3.AA-2	Deleted		3.AD-12	Deleted
3.AA-3	Deleted		3.AD-13	Deleted
3.AA-4	Deleted		3.AD-14	Deleted
3.AA-5	Deleted		3.AD-15	Deleted
3.AA-6	Deleted		3.AD-16	Deleted
3.AA-7	Deleted		3.AD-17	Deleted
3.AA-8	Deleted		3.AD-18	Deleted
Fig. 3.AA.1	Deleted		3.AD-19	Deleted
Fig. 3.AA.2	Deleted		Fig. 3.AD.1	Deleted
Fig. 3.AA.3	Deleted		Fig. 3.AD.2	Deleted
Fig. 3.AA.4	Deleted		Fig. 3.AD.3	Deleted
Fig. 3.AA.5	Deleted		3.AE-1	Deleted
Fig. 3.AA.6	Deleted		3.AE-2	Deleted
Fig. 3.AA.7	Deleted		3.AE-3	Deleted
Fig. 3.AA.8	Deleted		3.AE-4	Deleted
3.AB-1	Deleted		3.AE-5	Deleted
3.AB-2	Deleted		3.AE-6	Deleted
3.AB-3	Deleted		3.AE-7	Deleted
3.AB-4	Deleted		Fig. 3.AE.1	Deleted
3.AB-5	Deleted		Fig. 3.AE.1b	Deleted in Rev. 1
3.AB-6	Deleted		Fig. 3.AE.1c	Deleted in Rev. 1
3.AB-7	Deleted		Fig. 3.AE.2	Deleted
3.AB-8	Deleted		Fig. 3.AE.3	Deleted
3.AB-9	Deleted		Fig. 3.AE.4	Deleted in Rev. 1
3.AB-10	Deleted		3.AF-1	Deleted
3.AB-11	Deleted		3.AF-2	Deleted
3.AB-12	Deleted		3.AF-3	Deleted
3.AB-13	Deleted		3.AF-4	Deleted
3.AB-14	Deleted		3.AF-5	Deleted
3.AC-1	Deleted		3.AF-6	Deleted
3.AC-2	Deleted		3.AF-7	Deleted
3.AC-3	Deleted		3.AF-8	Deleted
3.AC-4	Deleted		3.AG-1	Deleted
3.AC-5	Deleted		3.AG-2	Deleted
3.AC-6	Deleted		3.AG-3	Deleted
3.AC-7	Deleted		3.AG-4	Deleted
3.AC-8	Deleted		3.AG-5	Deleted
3.AC-9	Deleted		3.AG-6	Deleted
3.AC-10	Deleted		3.AG-7	Deleted
3.AC-11	Deleted		3.AG-8	Deleted
3.AC-12	Deleted		3.AG-9	Deleted
3.AD-1	Deleted		3.AG-10	Deleted

LIST OF EFFECTIVE PAGES FOR HI-STORM 100 FSAR PROPOSED REVISION 2B

Page	Revision		Page	Revision
3.AG-11	Deleted		3.AJ-5	Deleted
3.AG-12	Deleted		3.AJ-6	Deleted
3.AG-13	Deleted		3.AJ-7	Deleted
3.AG-14	Deleted		3.AJ-8	Deleted
3.AG-15	Deleted		3.AJ-9	Deleted
3.AG-16	Deleted		3.AJ-10	Deleted
3.AG-17	Deleted		3.AJ-11	Deleted
3.AG-18	Deleted		3.AJ-12	Deleted
3.AG-19	Deleted		3.AJ-13	Deleted
3.AG-20	Deleted		3.AJ-14	Deleted
3.AG-21	Deleted		3.AJ-15	Deleted
3.AG-22	Deleted		3.AJ-16	Deleted
3.AG-23	Deleted		3.AJ-17	Deleted
3.AG-24	Deleted		3.AJ-18	Deleted
3.AH-1	Deleted		3.AJ-19	Deleted
3.AH-2	Deleted		Fig. 3.AJ.1	Deleted
3.AH-3	Deleted		Fig. 3.AJ.2	Deleted
3.AH-4	Deleted		Fig. 3.AJ.3	Deleted
3.AH-5	Deleted		3.AK-1	Deleted
3.AH-6	Deleted		3.AK-2	Deleted
3.AH-7	Deleted		3.AK-3	Deleted
3.AH-8	Deleted		3.AK-4	Deleted
3.AH-9	Deleted		3.AK-5	Deleted
3.AI-1	Deleted		3.AK-6	Deleted
3.AI-2	Deleted		3.AK-7	Deleted
3.AI-3	Deleted		3.AK-8	Deleted
3.AI-4	Deleted		3.AK-9	Deleted
3.AI-5	Deleted		3.AK-10	Deleted
3.AI-6	Deleted		3.AK-11	Deleted
3.AI-7	Deleted		3.AK-12	Deleted
3.AI-8	Deleted		3.AK-13	Deleted
3.AI-9	Deleted		3.AK-14	Deleted
3.AI-10	Deleted		3.AK-15	Deleted
3.AI-11	Deleted		3.AK-16	Deleted
3.AI-12	Deleted		3.AK-17	Deleted
3.AI-13	Deleted		3.AK-18	Deleted
3.AI-14	Deleted		3.AL-1	Deleted
3.AI-15	Deleted		3.AL-2	Deleted
3.AI-16	Deleted		3.AL-3	Deleted
3.AI-17	Deleted		3.AL-4	Deleted
3.AI-18	Deleted		3.AL-5	Deleted
3.AI-19	Deleted		3.AL-6	Deleted
Fig. 3.AI.1	Deleted		3.AL-7	Deleted
Fig. 3.AI.2	Deleted		3.AL-8	Deleted
Fig. 3.AI.3	Deleted		3.AL-9	Deleted
Fig. 3.AI.4	Deleted		3.AL-10	Deleted
Fig. 3.AI.5	Deleted		3.AM-1	Deleted
Fig. 3.AI.6	Deleted		3.AM-2	Deleted
3.AJ-1	Deleted		3.AM-3	Deleted
3.AJ-2	Deleted		3.AM-4	Deleted
3.AJ-3	Deleted		3.AM-5	Deleted
3.AJ-4	Deleted		3.AM-6	Deleted

LIST OF EFFECTIVE PAGES FOR HI-STORM 100 FSAR PROPOSED REVISION 2B

Page	Revision		Page	Revision
3.AM-7	Deleted		Fig. 3.AN.15	Deleted
3.AM-8	Deleted		Fig. 3.AN.16	Deleted
3.AM-9	Deleted		Fig. 3.AN.17	Deleted
3.AM-10	Deleted		Fig. 3.AN.18	Deleted
3.AM-11	Deleted		Fig. 3.AN.19	Deleted
3.AM-12	Deleted		Fig. 3.AN.20	Deleted
3.AM-13	Deleted		Fig. 3.AN.21	Deleted
3.AM-14	Deleted		Fig. 3.AN.22	Deleted
3.AM-15	Deleted		Fig. 3.AN.23	Deleted
3.AM-16	Deleted		Fig. 3.AN.24	Deleted
3.AM-17	Deleted		Fig. 3.AN.25	Deleted
3.AM-18	Deleted		Fig. 3.AN.26	Deleted
3.AM-19	Deleted		Fig. 3.AN.27	Deleted
3.AM-20	Deleted		Fig. 3.AN.28	Deleted
3.AM-21	Deleted		Fig. 3.AN.29	Deleted
3.AM-22	Deleted		Fig. 3.AN.30	Deleted
3.AM-23	Deleted		3.AO-1	Deleted
3.AM-24	Deleted		3.AP-1	Deleted
3.AM-25	Deleted		3.AQ-1	Deleted
3.AM-26	Deleted		3.AQ-2	Deleted
3.AM-27	Deleted		3.AQ-3	Deleted
3.AM-28	Deleted		3.AQ-4	Deleted
3.AM-29	Deleted		3.AQ-5	Deleted
3.AM-30	Deleted		3.AQ-6	Deleted
3.AN-1	Deleted		3.AQ-7	Deleted
3.AN-2	Deleted		3.AQ-8	Deleted
3.AN-3	Deleted		3.AQ-9	Deleted
3.AN-4	Deleted		3.AQ-10	Deleted
3.AN-5	Deleted		3.AR-1	Deleted
3.AN-6	Deleted		3.AR-2	Deleted
3.AN-7	Deleted		3.AR-3	Deleted
3.AN-8	Deleted		3.AR-4	Deleted
3.AN-9	Deleted		3.AR-5	Deleted
3.AN-10	Deleted		3.AR-6	Deleted
3.AN-11	Deleted		3.AR-7	Deleted
3.AN-12	Deleted		3.AR-8	Deleted
3.AN-13	Deleted		3.AR-9	Deleted
3.AN-14	Deleted		3.AR-10	Deleted
Fig. 3.AN.1	Deleted		3.AR-11	Deleted
Fig. 3.AN.2	Deleted		3.AS-1	Deleted
Fig. 3.AN.3	Deleted		3.AS-2	Deleted
Fig. 3.AN.4	Deleted		3.AS-3	Deleted
Fig. 3.AN.5	Deleted		3.AS-4	Deleted
Fig. 3.AN.6	Deleted		3.AS-5	Deleted
Fig. 3.AN.7	Deleted		3.AS-6	Deleted
Fig. 3.AN.8	Deleted		3.AS-7	Deleted
Fig. 3.AN.9	Deleted		3.AS-8	Deleted
Fig. 3.AN.10	Deleted		3.AS-9	Deleted
Fig. 3.AN.11	Deleted		3.AS-10	Deleted
Fig. 3.AN.12	Deleted		3.AS-11	Deleted
Fig. 3.AN.13	Deleted		3.AS-12	Deleted
Fig. 3.AN.14	Deleted		3.AS-13	Deleted

LIST OF EFFECTIVE PAGES FOR HI-STORM 100 FSAR PROPOSED REVISION 2B

Page	Revision		Page	Revision
4.0-1	2B		4.3-23	Deleted
4.0-2	2B		Fig. 4.3.1	Deleted
4.0-3	2B		Fig. 4.3.2	Deleted
4.0-4	2B		Fig. 4.3.3	Deleted
4.0-5	2B		Fig. 4.3.4	Deleted
Fig. 4.0.1	2A		4.4-1	2B
Fig. 4.0.2	2B		4.4-2	2B
Fig. 4.0.3	2B		4.4-3	2B
4.1-1	2B		4.4-4	2B
4.1-2	2B		4.4-5	2B
4.1-3	2B		4.4-6	2B
4.1-4	2B		4.4-7	2B
4.1-5	2B		4.4-8	2B
4.1-6	2B		4.4-9	2B
4.1-7	Deleted		4.4-10	2B
4.2-1	2B		4.4-11	2B
4.2-2	2B		4.4-12	2B
4.2-3	2B		4.4-13	2B
4.2-4	2B		4.4-14	2B
4.2-5	2B		4.4-15	2B
4.2-6	2B		4.4-16	2B
4.2-7	2B		4.4-17	2B
4.2-8	2B		4.4-18	2B
4.2-9	2B		4.4-19	2B
4.2-10	2B		4.4-20	2B
4.2-11	2B		4.4-21	2B
4.2-12	2B		4.4-22	2B
Fig. 4.2.1	Deleted		4.4-23	2B
Fig. 4.2.2	Deleted		4.4-24	2B
Fig. 4.2.3	2B		4.4-25	2B
4.3-1	2B		4.4-26	2B
4.3-2	2B		4.4-27	2B
4.3-3	2B		4.4-28	2B
4.3-4	Deleted		4.4-29	2B
4.3-5	Deleted		4.4-30	2B
4.3-6	Deleted		4.4-31	2B
4.3-7	Deleted		4.4-32	2B
4.3-8	Deleted		4.4-33	2B
4.3-9	Deleted		4.4-34	2B
4.3-10	Deleted		4.4-35	2B
4.3-11	Deleted		4.4-36	2B
4.3-12	Deleted		4.4-37	2B
4.3-13	Deleted		4.4-38	2B
4.3-14	Deleted		4.4-39	2B
4.3-15	Deleted		4.4-40	2B
4.3-16	Deleted		4.4-41	2B
4.3-17	Deleted		4.4-42	2B
4.3-18	Deleted		4.4-43	2B
4.3-19	Deleted		4.4-44	2B
4.3-20	Deleted		4.4-45	2B
4.3-21	Deleted		4.4-46	2B
4.3-22	Deleted		4.4-47	2B

LIST OF EFFECTIVE PAGES FOR HI-STORM 100 FSAR PROPOSED REVISION 2B

Page	Revision		Page	Revision
4.4-48	2B		Fig. 4.4.31	2B
4.4-49	2B		Fig. 4.4.32	2B
4.4-50	2B		Fig. 4.4.33	2B
4.4-51	Deleted		Fig. 4.4.34	2B
4.4-52	Deleted		Fig. 4.4.35	2B
4.4-53	Deleted		4.5-1	2B
4.4-54	Deleted		4.5-2	2B
4.4-55	Deleted		4.5-3	2B
4.4-56	Deleted		4.5-4	2B
4.4-57	Deleted		4.5-5	2B
4.4-58	Deleted		4.5-6	2B
4.4-59	Deleted		4.5-7	2B
4.4-60	Deleted		4.5-8	2B
4.4-61	Deleted		4.5-9	2B
4.4-62	Deleted		4.5-10	2B
4.4-63	Deleted		4.5-11	2B
4.4-64	Deleted		4.5-12	2B
4.4-65	Deleted		4.5-13	2B
4.4-66	Deleted		4.5-14	2B
4.4-67	Deleted		4.5-15	2B
4.4-68	Deleted		4.5-16	2B
Fig. 4.4.1	0		4.5-17	2B
Fig. 4.4.2	0		4.5-18	2B
Fig. 4.4.3	0		4.5-19	2B
Fig. 4.4.4	0		4.5-20	2B
Fig. 4.4.5	0		4.5-21	2B
Fig. 4.4.6	2A		4.5-22	2B
Fig. 4.4.7	2B		4.5-23	2B
Fig. 4.4.8	Deleted		4.5-24	2B
Fig. 4.4.9	1		4.5-25	Deleted
Fig. 4.4.10	0		4.5-26	Deleted
Fig. 4.4.11	Deleted		Fig. 4.5.1	Deleted
Fig. 4.4.12	Deleted		Fig. 4.5.2	Deleted
Fig. 4.4.13	0		Fig. 4.5.3	Deleted
Fig. 4.4.14	Deleted		Fig. 4.5.4	2B
Fig. 4.4.15	Deleted		4.6-1	2B
Fig. 4.4.16	2B		4.6-2	2B
Fig. 4.4.17	2B		4.7-1	2B
Fig. 4.4.18	Deleted		4.7-2	2B
Fig. 4.4.19	2B		4.7-3	2B
Fig. 4.4.20	2B		4.A-1	Deleted
Fig. 4.4.21	Deleted		4.A-2	Deleted
Fig. 4.4.22	Deleted		4.A-3	Deleted
Fig. 4.4.23	Deleted		4.A-4	Deleted
Fig. 4.4.24	0		4.A-5	Deleted
Fig. 4.4.25	2B		4.A-6	Deleted
Fig. 4.4.26	2B		4.A-7	Deleted
Fig. 4.4.27	2		4.A-8	Deleted
Fig. 4.4.28	2B		4.A-9	Deleted
Fig. 4.4.29	2A		4.A-10	Deleted
Fig. 4.4-30	2B		4.A-11	Deleted

LIST OF EFFECTIVE PAGES FOR HI-STORM 100 FSAR PROPOSED REVISION 2B

Page	Revision		Page	Revision
4.A-12	Deleted			
4.A-13	Deleted			
4.A-14	Deleted			
4.A-15	Deleted			
4.A-16	Deleted			
4.A-17	Deleted			
4.A-18	Deleted			
4.A-19	Deleted			
4.A-20	Deleted			
4.A-21	Deleted			
4.A-22	Deleted			
4.A-23	Deleted			
Fig. 4.A.1	Deleted			
Fig. 4.A.2	Deleted			
Fig. 4.A.3	Deleted			
Fig. 4.A.4	Deleted			
Fig. 4.A.5	Deleted			
Fig. 4.A.6	Deleted			
Fig. 4.A.7	Deleted			
Fig. 4.A.8	Deleted			
Fig. 4.A.9	Deleted			
Fig. 4.A.10	Deleted			
Fig. 4.A.11	Deleted			
Fig. 4.A.12	Deleted			
Fig. 4.A.13	Deleted			
4.B-1	2B			
4.B-2	2B			
4.B-3	2B			
4.B-4	2B			
4.B-5	2B			
4.B-6	2B			
4.B-7	2B			
4.B-8	2B			
4.B-9	2B			
4.B-10	2B			
Fig. 4.B.1	1			
Fig. 4.B.2	1			
Fig. 4.B.3	1			
Fig. 4.B.4	1			
Fig. 4.B.5	1			
Fig. 4.B.6	1			
Fig. 4.B.7	1			
Fig. 4.B.8	Deleted			

LIST OF EFFECTIVE PAGES FOR HI-STORM 100 FSAR PROPOSED REVISION 2B

Page	Revision		Page	Revision
5.0-1	2B		5.2-18	2B
5.0-2	2B		5.2-19	2B
5.0-3	2B		5.2-20	2B
5.1-1	2B		5.2-21	2B
5.1-2	2B		5.2-22	2B
5.1-3	2B		5.2-23	2B
5.1-4	2B		5.2-24	2B
5.1-5	2B		5.2-25	2B
5.1-6	2B		5.2-26	2B
5.1-7	2B		5.2-27	2B
5.1-8	2B		5.2-28	2B
5.1-9	2B		5.2-29	2B
5.1-10	2B		5.2-30	2B
5.1-11	2B		5.2-31	2B
5.1-12	2B		5.2-32	2B
5.1-13	2B		5.2-33	2B
5.1-14	2B		5.2-34	2B
5.1-15	2B		5.2-35	2B
5.1-16	2B		5.2-36	2B
5.1-17	2B		5.2-37	2B
5.1-18	2B		5.2-38	2B
5.1-19	2B		5.2-39	2B
5.1-20	2B		5.2-40	2B
Fig. 5.1.1	1		5.2-41	2B
Fig. 5.1.2	0		5.2-42	2B
Fig. 5.1.3	2B		5.2-43	2B
Fig. 5.1.4	0		5.2-44	2B
Fig. 5.1.5	0		5.2-45	2B
Fig. 5.1.6	0		5.2-46	2B
Fig. 5.1.7	0		5.2-47	2B
Fig. 5.1.8	0		5.2-48	2B
Fig. 5.1.9	0		5.2-49	2B
Fig. 5.1.10	0		5.2-50	2B
Fig. 5.1.11	0		5.2-51	2B
Fig. 5.1.12	1		5.2-52	2B
5.2-1	2B		5.2-53	2B
5.2-2	2B		5.2-54	2B
5.2-3	2B		5.2-55	2B
5.2-4	2B		5.2-56	2B
5.2-5	2B		5.2-57	2B
5.2-6	2B		5.2-58	2B
5.2-7	2B		5.3-1	2A
5.2-8	2B		5.3-2	2A
5.2-9	2B		5.3-3	2A
5.2-10	2B		5.3-4	2A
5.2-11	2B		5.3-5	2A
5.2-12	2B		5.3-6	2A
5.2-13	2B		5.3-7	2A
5.2-14	2B		5.3-8	2A
5.2-15	2B		5.3-9	2A
5.2-16	2B		5.3-10	2A
5.2-17	2B		5.3-11	2A

LIST OF EFFECTIVE PAGES FOR HI-STORM 100 FSAR PROPOSED REVISION 2B

Page	Revision		Page	Revision
5.3-12	2A		5.4-29	2B
5.3-13	2A		5.4-30	2B
5.3-14	2A		5.4-31	2B
Fig. 5.3.1	1		5.4-32	2B
Fig. 5.3.2	0		5.4-33	2B
Fig. 5.3.3	0		5.4-34	2B
Fig. 5.3.4	1		5.4-35	2B
Fig. 5.3.5	0		5.5-1	0
Fig. 5.3.6	0		5.6-1	2B
Fig. 5.3.7	1		5.6-2	2B
Fig. 5.3.8	0		5.6-3	2B
Fig. 5.3.9	0		5.A-1	0
Fig. 5.3.10	1		5.A-2	0
Fig. 5.3.11	1		5.A-3	0
Fig. 5.3.12	0		5.B-1	0
Fig. 5.3.13	0		5.B-2	0
Fig. 5.3.14	1		5.B-3	0
Fig. 5.3.15	1		5.B-4	0
Fig. 5.3.16	1		5.B-5	0
Fig. 5.3.17	1		5.B-6	0
Fig. 5.3.18	1		5.B-7	0
Fig. 5.3.19	1		5.C-1	0
Fig. 5.3-20	1		5.C-2	0
Fig. 5.3-21	1		5.C-3	0
5.4-1	2B		5.C-4	0
5.4-2	2B		5.C-5	0
5.4-3	2B		5.C-6	0
5.4-4	2B		5.C-7	0
5.4-5	2B		5.C-8	0
5.4-6	2B		5.C-9	0
5.4-7	2B		5.C-10	0
5.4-8	2B		5.C-11	0
5.4-9	2B		5.C-12	0
5.4-10	2B		5.C-13	0
5.4-11	2B		5.C-14	0
5.4-12	2B		5.C-15	0
5.4-13	2B		5.C-16	0
5.4-14	2B		5.C-17	0
5.4-15	2B		5.C-18	0
5.4-16	2B		5.C-19	0
5.4-17	2B		5.C-20	0
5.4-18	2B		5.C-21	0
5.4-19	2B		5.C-22	0
5.4-20	2B		5.C-23	0
5.4-21	2B		5.C-24	0
5.4-22	2B		5.C-25	0
5.4-23	2B		5.C-26	0
5.4-24	2B		5.C-27	0
5.4-25	2B		5.C-28	0
5.4-26	2B		5.C-29	0
5.4-27	2B		5.C-30	0
5.4-28	2B		5.C-31	0

LIST OF EFFECTIVE PAGES FOR HI-STORM 100 FSAR PROPOSED REVISION 2B

Page	Revision		Page	Revision
5.C-32	0			
5.C-33	0			
5.C-34	0			
5.C-35	0			
5.C-36	0			
5.C-37	0			
5.C-38	0			
5.C-39	0			
5.C-40	0			
5.C-41	0			
5.C-42	0			
5.C-43	0			
5.C-44	0			
5.C-45	0			
5.C-46	0			
5.C-47	0			
5.C-48	0			
5.C-49	0			
5.C-50	0			
5.C-51	0			
5.C-52	0			
5.C-53	0			
5.C-54	0			
5.C-55	0			
5.C-56	0			
5.C-57	0			
5.C-58	0			
5.C-59	0			
5.C-60	0			
5.C-61	0			
5.D-1	0			
5.D-2	0			
5.D-3	0			
5.D-4	0			
5.D-5	0			
5.D-6	0			
5.E-1	1			
5.E-2	1			
5.E-3	1			
5.E-4	1			

LIST OF EFFECTIVE PAGES FOR HI-STORM 100 FSAR PROPOSED REVISION 2B

Page	Revision		Page	Revision
6.1-1	2B		6.2-33	2B
6.1-2	2B		6.2-34	2B
6.1-3	2B		6.2-35	2B
6.1-4	2B		6.2-36	2B
6.1-5	2B		6.2-37	2B
6.1-6	2B		6.2-38	2B
6.1-7	2B		6.2-39	2B
6.1-8	2B		6.2-40	2B
6.1-9	2B		6.2-41	2B
6.1-10	2B		6.2-42	2B
6.1-11	2B		6.2-43	2B
6.1-12	2B		6.2-44	2B
6.1-13	2B		6.2-45	2B
6.1-14	2B		6.2-46	2B
6.1-15	2B		6.2-47	2B
6.1-16	2B		6.2-48	2B
6.1-17	2B		6.2-49	2B
6.1-18	2B		6.2-50	2B
6.1-19	2B		6.2-51	2B
6.2-1	2B		6.2-52	2B
6.2-2	2B		6.2-53	2B
6.2-3	2B		6.2-54	2B
6.2-4	2B		6.2-55	2B
6.2-5	2B		6.2-56	2B
6.2-6	2B		6.2-57	2B
6.2-7	2B		6.2-58	2B
6.2-8	2B		6.2-59	2B
6.2-9	2B		6.2-60	2B
6.2-10	2B		6.2-61	2B
6.2-11	2B		6.2-62	2B
6.2-12	2B		6.2-63	2B
6.2-13	2B		6.2-64	2B
6.2-14	2B		6.3-1	2A
6.2-15	2B		6.3-2	2A
6.2-16	2B		6.3-3	2A
6.2-17	2B		6.3-4	2A
6.2-18	2B		6.3-5	2A
6.2-19	2B		6.3-6	2A
6.2-20	2B		6.3-7	2A
6.2-21	2B		6.3-8	2A
6.2-22	2B		6.3-9	2A
6.2-23	2B		6.3-10	2A
6.2-24	2B		6.3-11	2A
6.2-25	2B		6.3-12	2A
6.2-26	2B		6.3-13	2A
6.2-27	2B		6.3-14	2A
6.2-28	2B		6.3-15	2A
6.2-29	2B		6.3-16	2B
6.2-30	2B		6.3-17	2B
6.2-31	2B		6.3-18	2B
6.2-32	2B		Fig. 6.3.1	1

LIST OF EFFECTIVE PAGES FOR HI-STORM 100 FSAR PROPOSED REVISION 2B

Page	Revision		Page	Revision
Fig. 6.3.1A	1		Fig. 6.4.10	1
Fig. 6.3.2	1		Fig. 6.4.11	1
Fig. 6.3.3	0		Fig. 6.4.12	1
Fig. 6.3.4	1		Fig. 6.4.13	1
Fig. 6.3.4A	1		Fig. 6.4.14	1
Fig. 6.3.5	1		Fig. 6.4.15	1
Fig. 6.3.6	0		Fig. 6.4.16	2
Fig. 6.3.7	1		Fig. 6.4.17	2A
6.4-1	2B		6.5-1	0
6.4-2	2B		6.6-1	0
6.4-3	2B		6.7-1	1
6.4-4	2B		6.7-2	1
6.4-5	2B		6.A-1	1
6.4-6	2B		6.A-2	1
6.4-7	2B		6.A-3	1
6.4-8	2B		6.A-4	1
6.4-9	2B		6.A-5	1
6.4-10	2B		6.A-6	1
6.4-11	2B		6.A-7	1
6.4-12	2B		6.A-8	1
6.4-13	2B		6.A-9	1
6.4-14	2B		6.A-10	1
6.4-15	2B		6.A-11	1
6.4-16	2B		6.A-12	1
6.4-17	2B		6.A-13	1
6.4-18	2B		6.A-14	1
6.4-19	2B		6.A-15	1
6.4-20	2B		6.A-16	1
6.4-21	2B		6.A-17	1
6.4-22	2B		6.A-18	1
6.4-23	2B		6.A-19	1
6.4-24	2B		6.A-20	1
6.4-25	2B		Fig. 6.A.1	0
6.4-26	2B		Fig. 6.A.2	0
6.4-27	2B		Fig. 6.A.3	0
6.4-28	2B		Fig. 6.A.4	0
6.4-29	2B		Fig. 6.A.5	0
6.4-30	2B		Fig. 6.A.6	0
6.4-31	2B		6.B-1	0
6.4-32	2B		6.B-2	0
6.4-33	2B		6.C-1	2B
Fig. 6.4.1	Deleted		6.C-2	2B
Fig. 6.4.2	1		6.C-3	2B
Fig. 6.4.3	1		6.C-4	2B
Fig. 6.4.4	1		6.C-5	2B
Fig. 6.4.5	1		6.C-6	2B
Fig. 6.4.6	1		6.C-7	2B
Fig. 6.4.7	1		6.C-8	2B
Fig. 6.4.8	1		6.C-9	2B
Fig. 6.4.9	1		6.C-10	2B

LIST OF EFFECTIVE PAGES FOR HI-STORM 100 FSAR PROPOSED REVISION 2B

Page	Revision		Page	Revision
6.C-11	2B			
6.C-12	2B			
6.C-13	2B			
6.C-14	2B			
6.C-15	2B			
6.C-16	2B			
6.C-17	2B			
6.D-1	1			
6.D-2	1			
6.D-3	1			
6.D-4	1			
6.D-5	1			
6.D-6	1			
6.D-7	1			
6.D-8	1			
6.D-9	1			
6.D-10	1			
6.D-11	1			
6.D-12	1			
6.D-13	1			
6.D-14	1			
6.D-15	1			
6.D-16	1			
6.D-17	1			
6.D-18	1			
6.D-19	1			
6.D-20	1			
6.D-21	1			
6.D-22	1			
6.D-23	1			
6.D-24	1			
6.D-25	1			
6.D-26	1			
6.D-27	1			
6.D-28	1			
6.D-29	1			
6.D-30	1			
6.D-31	1			
6.D-32	1			
6.D-33	1			
6.D-34	1			
6.D-35	1			
7.0-1	2B		7.A-8	Deleted
7.1-1	2B		7.A-9	Deleted
7.1-2	2B		7.A-10	Deleted
7.1-3	2B		7.A-11	Deleted

LIST OF EFFECTIVE PAGES FOR HI-STORM 100 FSAR PROPOSED REVISION 2B

Page	Revision		Page	Revision
7.1-4	2B		7.A-12	Deleted
7.1-5	2B		7.A-13	Deleted
7.1-6	2B		7.A-14	Deleted
7.1-7	2B		7.A-15	Deleted
7.1-8	2B		7.A-16	Deleted
Fig. 7.1.1	0		7.A-17	Deleted
7.2-1	2B		7.A-18	Deleted
7.2-2	Deleted		7.A-19	Deleted
7.2-3	Deleted		7.A-20	Deleted
7.2-4	Deleted		7.A-21	Deleted
7.2-5	Deleted		7.A-22	Deleted
7.2-6	Deleted		7.A-23	Deleted
7.2-7	Deleted		7.A-24	Deleted
7.2-8	Deleted		7.A-25	Deleted
7.2-9	Deleted		7.A-26	Deleted
7.2-10	Deleted		7.A-27	Deleted
7.2-11	Deleted		7.A-28	Deleted
7.2-12	Deleted		7.A-29	Deleted
7.3-1	2B		7.A-30	Deleted
7.3-2	Deleted		7.A-31	Deleted
7.3-3	Deleted		7.A-32	Deleted
7.3-4	Deleted		7.A-33	Deleted
7.3-5	Deleted		7.A-34	Deleted
7.3-6	Deleted		7.A-35	Deleted
7.3-7	Deleted		7.A-36	Deleted
7.3-8	Deleted		7.A-37	Deleted
7.3-9	Deleted		7.A-38	Deleted
7.3-10	Deleted		7.A-39	Deleted
7.3-11	Deleted		7.A-40	Deleted
7.3-12	Deleted		7.A-41	Deleted
7.3-13	Deleted		7.A-42	Deleted
7.3-14	Deleted		7.A-43	Deleted
7.3-15	Deleted		7.A-44	Deleted
7.3-16	Deleted		7.A-45	Deleted
7.3-17	Deleted		7.A-46	Deleted
7.3-18	Deleted		7.A-47	Deleted
7.3-19	Deleted		7.A-48	Deleted
7.3-20	Deleted		7.A-49	Deleted
7.3-21	Deleted		7.A-50	Deleted
7.4-1	2B		7.A-51	Deleted
7.4-2	2B		7.A-52	Deleted
7.A-1	2B		7.A-53	Deleted
7.A-2	Deleted		7.A-54	Deleted
7.A-3	Deleted		7.A-55	Deleted
7.A-4	Deleted		7.A-56	Deleted
7.A-5	Deleted		7.A-57	Deleted
7.A-6	Deleted		7.A-58	Deleted
7.A-7	Deleted		7.A-59	Deleted
7.A-60	Deleted			
7.A-61	Deleted			
7.A-62	Deleted			
7.A-63	Deleted			

LIST OF EFFECTIVE PAGES FOR HI-STORM 100 FSAR PROPOSED REVISION 2B

Page	Revision		Page	Revision
7.A-64	Deleted			
7.A-65	Deleted			
7.A-66	Deleted			
7.A-67	Deleted			
7.A-68	Deleted			
7.A-69	Deleted			
7.A-70	Deleted			
7.A-71	Deleted			
7.A-72	Deleted			
7.A-73	Deleted			
7.A-74	Deleted			
7.A-75	Deleted			
7.A-76	Deleted			
7.A-77	Deleted			
7.A-78	Deleted			
7.A-79	Deleted			
7.A-80	Deleted			
7.A-81	Deleted			
7.A-82	Deleted			
7.A-83	Deleted			
7.A-84	Deleted			
7.A-85	Deleted			
7.A-86	Deleted			
7.A-87	Deleted			
7.A-88	Deleted			
7.A-89	Deleted			
7.A-90	Deleted			
7.A-91	Deleted			

LIST OF EFFECTIVE PAGES FOR HI-STORM 100 FSAR PROPOSED REVISION 2B

Page	Revision		Page	Revision
8.0-1	2B		Fig. 8.1.2d	1
8.0-2	2B		Fig. 8.1.2e	0
8.0-3	2B		Fig. 8.1.2f	0
8.0-4	2B		Fig. 8.1.3	0
8.0-5	2B		Fig. 8.1.4	1
8.0-6	2B		Fig. 8.1.5	0
8.1-1	2B		Fig. 8.1.6	0
8.1-2	2B		Fig. 8.1.7	1
8.1-3	2B		Fig. 8.1.8	0
8.1-4	2B		Fig. 8.1.9	0
8.1-5	2B		Fig. 8.1.10	0
8.1-6	2B		Fig. 8.1.11	0
8.1-7	2B		Fig. 8.1.12	1
8.1-8	2B		Fig. 8.1.13	1
8.1-9	2B		Fig. 8.1.14	0
8.1-10	2B		Fig. 8.1.15	0
8.1-11	2B		Fig. 8.1.16	0
8.1-12	2B		Fig. 8.1.17	0
8.1-13	2B		Fig. 8.1.18	1
8.1-14	2B		Fig. 8.1.19	1
8.1-15	2B		Fig. 8.1.20	1
8.1-16	2B		Fig. 8.1.21	1
8.1-17	2B		Fig. 8.1.22a	1
8.1-18	2B		Fig. 8.1.22b	1
8.1-19	2B		Fig. 8.1.23	1
8.1-20	2B		Fig. 8.1.24	0
8.1-21	2B		Fig. 8.1.25	1
8.1-22	2B		Fig. 8.1.26	1
8.1-23	2B		Fig. 8.1.27	1
8.1-24	2B		Fig. 8.1.28	1
8.1-25	2B		Fig. 8.1.29a	1
8.1-26	2B		Fig. 8.1.29b	1
8.1-27	2B		Fig. 8.1.30	1
8.1-28	2B		Fig. 8.1.31	1
8.1-29	2B		Fig. 8.1.32	0
8.1-30	2B		Fig. 8.1.33	1
8.1-31	2B		Fig. 8.1.34a	1
8.1-32	2B		Fig. 8.1.34b	Deleted
8.1-33	2B		Fig. 8.1.35	0
8.1-34	2B		Fig. 8.1.36	0
8.1-35	2B		Fig. 8.1.37	1
8.1-36	2B		8.2-1	1
8.1-37	2B		8.3-1	2B
8.1-38	2B		8.3-2	2B
8.1-39	2B		8.3-3	2B
8.1-40	2B		8.3-4	2B
8.1-41	2B		8.3-5	2B
Fig. 8.1.1	1		8.3-6	2B
Fig. 8.1.2a	0		8.3-7	2B
Fig. 8.1.2b	0		8.3-8	2B
Fig. 8.1.2c	1		8.3-9	2B
			8.3-10	2B

LIST OF EFFECTIVE PAGES FOR HI-STORM 100 FSAR PROPOSED REVISION 2B

Page	Revision		Page	Revision
Fig. 8.3.1	1			
Fig. 8.3.2a	1			
Fig. 8.3.2b	0			
Fig. 8.3.2c	0			
Fig. 8.3.2d	0			
Fig. 8.3.3	0			
Fig. 8.3.4	1			
8.4-1	2A			
8.4-2	2A			
Fig. 8.4-1a	1			
Fig. 8.4-1b	1			
8.5-1	2A			
8.5-2	2A			
8.5-3	2A			
8.5-4	2A			
8.5-5	2A			
Fig. 8.5-1	0			
8.6-1	0			

LIST OF EFFECTIVE PAGES FOR HI-STORM 100 FSAR PROPOSED REVISION 2B

Page	Revision		Page	Revision
9.0-1	0			
9.1-1	2B			
9.1-2	2B			
9.1-3	2B			
9.1-4	2B			
9.1-5	2B			
9.1-6	2B			
9.1-7	2B			
9.1-8	2B			
9.1-9	2B			
9.1-10	2B			
9.1-11	2B			
9.1-12	2B			
9.1-13	2B			
9.1-14	2B			
9.1-15	2B			
9.1-16	2B			
9.1-17	2B			
9.1-18	2B			
9.1-19	2B			
9.1-20	2B			
9.1-21	2B			
9.1-22	2B			
9.1-23	2B			
9.1-24	2B			
9.1-25	2B			
9.1-26	2B			
9.1-27	2B			
9.1-28	2B			
9.1-29	2B			
9.1-30	2B			
9.2-1	2B			
9.2-2	2B			
9.2-3	2B			
9.2-4	2B			
9.3-1	2B			
9.4-1	0			

LIST OF EFFECTIVE PAGES FOR HI-STORM 100 FSAR PROPOSED REVISION 2B

Page	Revision		Page	Revision
10.1-1	1		10.3-42	2A
10.1-2	1		10.3-43	2A
10.1-3	1		Fig. 10.3.1a	1
10.1-4	1		Fig. 10.3.1b	1
10.1-5	1		Fig. 10.3.1c	1
10.1-6	1		Fig. 10.3.1d	1
10.1-7	1		Fig. 10.3.1e	1
10.1-8	1		10.4-1	2B
Fig. 10.1.1	1		10.4-2	2B
10.2-1	2A		10.4-3	2B
10.3-1	2A		10.4-4	2B
10.3-2	2A		10.4-5	2B
10.3-3	2A		10.5-1	0
10.3-4	2B			
10.3-5	2B			
10.3-6	2B			
10.3-7	2B			
10.3-8	2B			
10.3-9	2B			
10.3-10	2B			
10.3-11	2B			
10.3-12	2B			
10.3-13	2B			
10.3-14	2B			
10.3-15	2B			
10.3-16	2B			
10.3-17	2B			
10.3-18	2B			
10.3-19	2B			
10.3-20	2B			
10.3-21	2B			
10.3-22	2A			
10.3-23	2A			
10.3-24	2A			
10.3-25	2A			
10.3-26	2A			
10.3-27	2A			
10.3-28	2A			
10.3-29	2A			
10.3-30	2A			
10.3-31	2A			
10.3-32	2A			
10.3-33	2A			
10.3-34	2A			
10.3-35	2A			
10.3-36	2A			
10.3-37	2A			
10.3-38	2A			
10.3-39	2A			
10.3-40	2A			

LIST OF EFFECTIVE PAGES FOR HI-STORM 100 FSAR PROPOSED REVISION 2B

Page	Revision		Page	Revision
10.3-41	2A			
11.1-1	2B		11.2-37	2B
11.1-2	2B		11.2-38	2B
11.1-3	2B		11.2-39	2B
11.1-4	2B		11.2-40	2B
11.1-5	2B		11.2-41	2B
11.1-6	2B		11.2-42	2B
11.1-7	2B		11.2-43	2B
11.1-8	2B		11.2-44	2B
11.1-9	2B		11.2-45	2B
11.1-10	2B		11.2-46	2B
11.1-11	2B		11.2-47	2B
11.1-12	2B		11.2-48	2B
11.1-13	2B		11.2-49	2B
11.1-14	2B		11.2-50	2B
11.1-15	2B		11.2-51	2B
11.1-16	2B		Fig. 11.2.1	0
11.2-1	2B		Fig. 11.2.2	Deleted
11.2-2	2B		Fig. 11.2.3	Deleted
11.2-3	2B		Fig. 11.2.4	Deleted
11.2-4	2B		Fig. 11.2.5	Deleted
11.2-5	2B		Fig. 11.2.6	2A
11.2-6	2B		Fig. 11.2.7	Deleted
11.2-7	2B		11.3-1	1
11.2-8	2B			
11.2-9	2B			
11.2-10	2B			
11.2-11	2B			
11.2-12	2B			
11.2-13	2B			
11.2-14	2B			
11.2-15	2B			
11.2-16	2B			
11.2-17	2B			
11.2-18	2B			
11.2-19	2B			
11.2-20	2B			
11.2-21	2B			
11.2-22	2B			
11.2-23	2B			
11.2-24	2B			
11.2-25	2B			
11.2-26	2B			
11.2-27	2B			
11.2-28	2B			
11.2-29	2B			
11.2-30	2B			
11.2-31	2B			
11.2-32	2B			
11.2-33	2B			
11.2-34	2B			

LIST OF EFFECTIVE PAGES FOR HI-STORM 100 FSAR PROPOSED REVISION 2B

Page	Revision		Page	Revision
11.2-35	2B			
11.2-36	2B			
12.0-1	0		B 3.2.2-1	2A
12.1-1	1		B 3.2.2-2	Deleted
12.1-2	1		B 3.2.2-3	Deleted
12.1-3	1		B 3.2.3-1	2A
12.2-1	2B		B 3.2.3-2	Deleted
12.2-2	2B		B 3.2.3-3	Deleted
12.2-3	2B		B 3.3.1-1	2A
12.2-4	2B		B 3.3.1-2	2A
12.2-5	2B		B 3.3.1-3	2A
12.2-6	2B		B 3.3.1-4	2A
12.2-7	2B		B 3.3.1-5	2A
12.2-8	2B		Appendix 12.B Cover	0
12.2-9	2B		Comment Resolution Letters	0
12.3-1	0		21 Pages	
12.4-1	0			
12.5-1	0			
Appendix 12.A Cover	2B			
TS Bases TOC	2B			
B 3.0-1	0			
B 3.0-2	0			
B 3.0-3	0			
B 3.0-4	0			
B 3.0-5	0			
B 3.0-6	0			
B 3.0-7	0			
B 3.0-8	0			
B 3.0-9	0			
B 3.1.1-1	2B			
B 3.1.1-2	2B			
B 3.1.1-3	2B			
B 3.1.1-4	2B			
B 3.1.1-5	2B			
B 3.1.1-6	2B			
B 3.1.1-7	2B			
B 3.1.1-8	2B			
B 3.1.2-1	2B			
B 3.1.2-2	2B			
B 3.1.2-3	2B			
B 3.1.2-4	2B			
B 3.1.2-5	2B			
B 3.1.2-6	2B			
B 3.1.2-7	2B			
B 3.1.3-1	2B			
B 3.1.3-2	2B			
B 3.1.3-3	2B			
B 3.1.3-4	2B			
B 3.1.3-5	2B			
B 3.1.3-6	2B			
B 3.1.3-7	2B			
B 3.2.1-1	2A			

LIST OF EFFECTIVE PAGES FOR HI-STORM 100 FSAR PROPOSED REVISION 2B

Page	Revision		Page	Revision
B 3.2.1-2	Deleted			
B 3.2.1-3	Deleted			
13.0-1	2B			
13.0-2	2B			
13.1-1	Deleted			
13.1-2	Deleted			
13.2-1	Deleted			
13.3-1	Deleted			
13.3-2	Deleted			
13.3-3	Deleted			
13.3-4	Deleted			
13.3-5	Deleted			
13.3-6	Deleted			
13.3-7	Deleted			
13.3-8	Deleted			
13.3-9	Deleted			
13.3-10	Deleted			
13.3-11	Deleted			
13.3-12	Deleted			
13.3-13	Deleted			
13.3-14	Deleted			
13.3-15	Deleted			
13.3-16	Deleted			
13.3-17	Deleted			
13.4-1	Deleted in Rev. 1			
13.5-1	Deleted			
13.5-2	Deleted			
13.6-1	2A			
Appendix 13.A	Deleted in Rev. 1			
Appendix 13.B	Deleted in Rev. 1			

CHAPTER 1†: GENERAL DESCRIPTION

1.0 GENERAL INFORMATION

This Final Safety Analysis Report (FSAR) for Holtec International's HI-STORM 100 System is a compilation of information and analyses to support a United States Nuclear Regulatory Commission (NRC) licensing review as a spent nuclear fuel (SNF) dry storage cask under requirements specified in 10CFR72 [1.0.1]. This FSAR describes the basis for NRC approval and issuance of a Certificate of Compliance (C of C) for storage under provisions of 10CFR72, Subpart L, for the HI-STORM 100 System to safely store spent nuclear fuel (SNF) at an Independent Spent Fuel Storage Installation (ISFSI). This report has been prepared in the format and content suggested in NRC Regulatory Guide 3.61 [1.0.2] and NUREG-1536 Standard Review Plan for Dry Cask Storage Systems [1.0.3] to facilitate the NRC review process.

The purpose of this chapter is to provide a general description of the design features and storage capabilities of the HI-STORM 100 System, drawings of the structures, systems, and components important to safety, and the qualifications of the certificate holder. This report is also suitable for incorporation into a site-specific Safety Analysis Report, which may be submitted by an applicant for a site-specific 10 CFR 72 license to store SNF at an ISFSI or a facility similar in objective and scope. Table 1.0.1 contains a listing of the terminology and notation used in this FSAR.

To aid NRC review, additional tables and references have been added to facilitate the location of information requested by NUREG-1536. Table 1.0.2 provides a matrix of the topics in NUREG-1536 and Regulatory Guide 3.61, the corresponding 10CFR72 requirements, and a reference to the applicable FSAR section that addresses each topic.

The HI-STORM 100 FSAR is in full compliance with the intent of all regulatory requirements listed in Section III of each chapter of NUREG-1536. However, an exhaustive review of the provisions in NUREG-1536, particularly Section IV (Acceptance Criteria) and Section V (Review Procedures) has identified certain deviations from a verbatim compliance to all guidance. A list of all such items, along with a discussion of their intent and Holtec International's approach for compliance with the underlying intent is presented in Table 1.0.3 herein. Table 1.0.3 also contains the justification for the alternative method for compliance adopted in this FSAR. The justification may be in the form of a supporting analysis, established industry practice, or other NRC guidance documents. Each chapter in this FSAR provides a clear statement with respect to the extent of compliance to the NUREG-1536 provisions. Chapter 1 is in full compliance with NUREG-1536; no exceptions are taken.

---

† This chapter has been prepared in the format and section organization set forth in Regulatory Guide 3.61. However, the material content of this chapter also fulfills the requirements of NUREG-1536. Pagination and numbering of sections, figures, and tables are consistent with the convention set down in Chapter 1, Section 1.0, herein. Finally, all terms-of-art used in this chapter are consistent with the terminology of the glossary (Table 1.0.1) and component nomenclature of the Bill-of-Materials (Section 1.5).

The generic design basis and the corresponding safety analysis of the HI-STORM 100 System contained in this FSAR are intended to bound the SNF characteristics, design, conditions, and interfaces that exist in the vast majority of domestic power reactor sites and potential away-from-reactor storage sites in the contiguous United States. This FSAR also provides the basis for component fabrication and acceptance, and the requirements for safe operation and maintenance of the components, consistent with the design basis and safety analysis documented herein. In accordance with 10CFR72, Subpart K, site-specific implementation of the generically certified HI-STORM 100 System requires that the licensee perform a site-specific evaluation, as defined in 10CFR72.212. The HI-STORM 100 System FSAR identifies a limited number of conditions that are necessarily site-specific and are to be addressed in the licensee's 10CFR72.212 evaluation. These include:

- Siting of the ISFSI and design of the storage pad (including the embedment for anchored cask users) and security system. Site-specific demonstration of compliance with regulatory dose limits. Implementation of a site-specific ALARA program.

- An evaluation of site-specific hazards and design conditions that may exist at the ISFSI site or the transfer route between the plant's cask receiving bay and the ISFSI. These include, but are not limited to, explosion and fire hazards, flooding conditions, land slides, and lightning protection.

- Determination that the physical and nucleonic characteristics and the condition of the SNF assemblies to be dry stored meet the fuel acceptance requirements of the Certificate of Compliance.

- An evaluation of interface and design conditions that exist within the plant's fuel building in which canister fuel loading, canister closure, and canister transfer operations are to be conducted in accordance with the applicable 10CFR50 requirements and technical specifications for the plant.

- Detailed site-specific operating, maintenance, and inspection procedures prepared in accordance with the generic procedures and requirements provided in Chapters 8 and 9, and the technical specifications provided in the Certificate of Compliance.

- Performance of pre-operational testing.

- Implementation of a safeguards and accountability program in accordance with 10CFR73. Preparation of a physical security plan in accordance with 10CFR73.55.

- Review of the reactor emergency plan, quality assurance (QA) program, training program, and radiation protection program.

The generic safety analyses contained in the HI-STORM 100 FSAR may be used as input and for guidance by the licensee in performing a 10CFR72.212 evaluation.

Within this report, all figures, tables and references cited are identified by the double decimal system m.n.i, where m is the chapter number, n is the section number, and i is the sequential number. Thus, for example, Figure 1.2.3 is the third figure in Section 1.2 of Chapter 1.

Revisions to this document are made on a section level basis. Complete sections have been replaced if any material in the section changed. The specific changes are noted with revision bars in the right margin. Figures are revised individually. Drawings are controlled separately within the Holtec QA program and have individual revision numbers. Bills-of-Material (BOMs) are considered separate drawings and are not necessarily at the same revision level as the drawing(s) to which they apply. If a drawing or BOM was revised in support of the current FSAR revision, that drawing/BOM is included in Section 1.5 at its latest revision level. Drawings and BOMs appearing in this FSAR may be revised between formal updates to the FSAR. Therefore, the revisions of drawings/BOMs in Section 1.5 may not be current.

1.0.1 Engineering Change Orders

The changes authorized by the following Holtec Engineering Change Orders (ECOs) are reflected in Revision 1 of this FSAR:

MPC-68/68F/68FF: ECOs 1021-1 through 4, 7, 8, 12 through 16, 18 through 23, 27 through 30, 33, 34, 36, 38, 39, 41, 43, and 44; and 71188-43.

MPC-24/24E/24EF: ECOs 1022- 1 through 7, 9, 10, 12 through 26, 28, 31, and 34 through 38.

MPC-32: ECOs 1023-1 and 3 through 10.

HI-STORM overpack: ECOs 1024-1 through 4, 6 through 16, 18 through 21, 24, 25, 27 through 38, 42 through 47, 50, 51, 52, 54 through 58, and 60.

HI-TRAC 125 transfer cask: ECOs 1025-1 through 32, 35, and 36.

HI-TRAC 100 transfer cask: ECOs 1026- 1 through 29.

Ancillary Equipment: ECOs 1027-27, 31, 33, 46, and 53.

General FSAR changes: ECOs 5014-36, 47, 49, 50, 51, 53, 54, 56, 58 through 64, 66, 67, and 68.

Table 1.0.1

TERMINOLOGY AND NOTATION

ALARA is an acronym for As Low As Reasonably Achievable.

Boral is a generic term to denote an aluminum-boron carbide cermet manufactured in accordance with U.S. Patent No. 4027377. The individual material supplier may use another trade name to refer to the same product.

Boral™ means Boral manufactured by AAR Advanced Structures.

BWR is an acronym for boiling water reactor.

C.G. is an acronym for center of gravity.

Commercial Spent Fuel or CSF *refers to nuclear fuel used to produce energy in a commercial nuclear power plant.*

Confinement Boundary means the outline formed by the sealed, cylindrical enclosure of the Multi-Purpose Canister (MPC) shell welded to a solid baseplate, a lid welded around the top circumference of the shell wall, the port cover plates welded to the lid, and the closure ring welded to the lid and MPC shell providing the redundant sealing.

Confinement System means the Multi-Purpose Canister (MPC) which encloses and confines the spent nuclear fuel during storage.

Controlled Area means that area immediately surrounding an ISFSI for which the owner/user exercises authority over its use and within which operations are performed.

Cooling Time ***(or post-irradiation cooling time)*** for a spent fuel assembly is the time between ~~its discharge from the reactor (~~reactor shutdown~~)~~ and the time the spent fuel assembly is loaded into the MPC.

DBE means Design Basis Earthquake.

DCSS is an acronym for Dry Cask Storage System.

Damaged Fuel Assembly is a fuel assembly with known or suspected cladding defects, as determined by review of records, greater than pinhole leaks or hairline cracks, empty fuel rod locations that are not replaced with dummy fuel rods, or those that cannot be handled by normal means. Fuel assemblies that cannot be handled by normal means due to fuel cladding damage are considered fuel debris.

Table 1.0.1

TERMINOLOGY AND NOTATION

Damaged Fuel Container (or Canister) means a specially designed enclosure for damaged fuel or fuel debris which permits gaseous and liquid media to escape while minimizing dispersal of gross particulates. The Damaged Fuel Container/Canister (DFC) features a lifting location which is suitable for remote handling of a loaded or unloaded DFC.

***Design Heat Load** is the computed heat rejection capacity of the HI-STORM system with a certified MPC loaded with CSF stored in uniform storage with the ambient at the normal temperature and the peak cladding temperature (PCT) at 400°C. The Design Heat Load is less than the thermal capacity of the system by a suitable margin that reflects the conservatism in the system thermal analysis.*

Design Life is the minimum duration for which the component is engineered to perform its intended function set forth in this FSAR, if operated and maintained in accordance with this FSAR.

Design Report is a document prepared, reviewed and QA validated in accordance with the provisions of 10CFR72 Subpart G. The Design Report shall demonstrate compliance with the requirements set forth in the Design Specification. A Design Report is mandatory for systems, structures, and components designated as Important to Safety. *The FSAR serves as the Design Report for the HI-STORM 100 System.*

Design Specification is a document prepared in accordance with the quality assurance requirements of 10CFR72 Subpart G to provide a complete set of design criteria and functional requirements for a system, structure, or component, designated as Important to Safety, intended to be used in the operation, implementation, or decommissioning of the HI-STORM 100 System. *The FSAR serves as the Design Specification for the HI-STORM 100 System.*

Enclosure Vessel ***(or MPC Enclosure Vessel)*** means the pressure vessel defined by the cylindrical shell, baseplate, port cover plates, lid, ~~and~~ closure ring, *and associated welds that* ~~which~~ provides confinement for the helium gas contained within the MPC. The Enclosure Vessel (EV) and the fuel basket together constitute the multi-purpose canister.

Fracture Toughness is a property which is a measure of the ability of a material to limit crack propagation under a suddenly applied load.

FSAR is an acronym for Final Safety Analysis Report (10CFR72).

Fuel Basket means a honeycombed structural weldment with square openings which can accept a fuel assembly of the type for which it is designed.

Fuel Debris refers to ruptured fuel rods, severed rods, loose fuel pellets, or fuel assemblies with known or suspected defects which cannot be handled by normal means due to fuel cladding damage.

High Burnup Fuel, ***or HBF*** is a *commercial* spent fuel assembly with an average burnup greater than 45,000 MWD/MTU.

Table 1.0.1

TERMINOLOGY AND NOTATION

HI-TRAC transfer cask or HI-TRAC means the transfer cask used to house the MPC during MPC fuel loading, unloading, drying, sealing, and on-site transfer operations to a HI-STORM storage overpack or HI-STAR storage/transportation overpack. The HI-TRAC shields the loaded MPC allowing loading operations to be performed while limiting radiation exposure to personnel. HI-TRAC is an acronym for Holtec International Transfer Cask. In this FSAR there are three HI-TRAC transfer casks, the 125 ton standard design HI-TRAC (HI-TRAC-125), the 125-ton dual-purpose lid design (HI-TRAC 125D), and the 100 ton HI-TRAC (HI-TRAC-100). The 100 ton HI-TRAC is provided for use at sites with a maximum crane capacity of less than 125 tons. The term HI-TRAC is used as a generic term to refer to all three HI-TRAC transfer cask design, unless the discussion requires distinguishing among the three. The HI-TRAC is equipped with a pair of lifting trunnions and the HI-TRAC 100 and HI-TRAC 125 designs also include pocket trunnions. The trunnions are used to lift and downend/upend the HI-TRAC with a loaded MPC.

HI-STORM overpack or storage overpack means the cask that receives and contains the sealed multi-purpose canisters containing spent nuclear fuel. It provides the gamma and neutron shielding, ventilation passages, missile protection, and protection against natural phenomena and accidents for the MPC. The term "overpack" as used in this FSAR refers to both the standard design overpack (HI-STORM 100), the alternate design overpack (HI-STORM 100S), and either of these as an overpack designed for high seismic deployment (HI-STORM 100A or HI-STORM 100SA), unless otherwise clarified.

HI-STORM 100 System consists of a loaded MPC placed within the HI-STORM ~~100~~ overpack.

Holtite™ is the trade name for all present and future neutron shielding materials formulated under Holtec International's R&D program dedicated to developing shielding materials for application in dry storage and transport systems. The Holtite development program is an ongoing experimentation effort to identify neutron shielding materials with enhanced shielding and temperature tolerance characteristics. Holtite-A™ is the first and only shielding material qualified under the Holtite R&D program. As such, the terms Holtite and Holtite-A may be used interchangeably throughout this FSAR.

Holtite™-A is a trademarked Holtec International neutron shield material.

Important to Safety (ITS) means a function or condition required to store spent nuclear fuel safely; to prevent damage to spent nuclear fuel during handling and storage, and to provide reasonable assurance that spent nuclear fuel can be received, handled, packaged, stored, and retrieved without undue risk to the health and safety of the public.

Independent Spent Fuel Storage Installation (ISFSI) means a facility designed, constructed, and licensed for the interim storage of spent nuclear fuel and other radioactive materials associated with spent fuel storage in accordance with 10CFR72.

Table 1.0.1

TERMINOLOGY AND NOTATION

Intact Fuel Assembly is defined as a fuel assembly without known or suspected cladding defects greater than pinhole leaks and hairline cracks, and which can be handled by normal means. Fuel assemblies without fuel rods in fuel rod locations shall not be classified as Intact Fuel Assemblies unless dummy fuel rods are used to displace an amount of water greater than or equal to that displaced by the fuel rod(s).

License Life means the duration for which the system is authorized by virtue of its certification by the U.S. NRC.

Long-term Storage means the time beginning after on-site handling is complete and the loaded overpack is at rest in its designated storage location on the ISFSI pad and lasting up to the end of the licensed life of the HI-STORM 100 System (20 years).

Lowest Service Temperature (LST) is the minimum metal temperature of a part for the specified service condition.

Maximum Reactivity means the highest possible k-effective including bias, uncertainties, and calculational statistics evaluated for the worst-case combination of fuel basket manufacturing tolerances.

METAMIC® is a trade name for an aluminum/boron carbide composite neutron absorber material qualified for use in the MPCs.

METCON™ is a trade name for the HI-STORM 100 overpack. The trademark is derived from the metal-concrete composition of the HI-STORM 100 overpack.

MGDS is an acronym for Mined Geological Disposal System.

Minimum Enrichment is the minimum assembly average enrichment. Natural uranium blankets are not considered in determining minimum enrichment.

Moderate Burnup Fuel, *or MBF* is a *commercial* spent fuel assembly with an average burnup less than or equal to 45,000 MWD/MTU.

Multi-Purpose Canister (MPC) means the sealed canister ~~which~~ consist*ing*s of a honeycombed fuel basket for spent nuclear fuel storage, contained in a cylindrical canister shell *(the MPC Enclosure Vessel)*.~~which is welded to a baseplate, lid with welded port cover plates, and closure ring. MPC is an acronym for multi-purpose canister.~~ There are different MPCs with different fuel basket geometries for storing PWR or BWR fuel, but all MPCs have identical exterior dimensions. The MPC is the confinement boundary for storage conditions.

Table 1.0.1

TERMINOLOGY AND NOTATION

NDT is an acronym for Nil Ductility Transition Temperature, which is defined as the temperature at which the fracture stress in a material with a small flaw is equal to the yield stress in the same material if it had no flaws.

***Neutron Absorber Material** is a generic term used in this FSAR to indicate any neutron absorber material qualified for use in the HI-STORM 100 System MPCs.*

Neutron Shielding means a material used to thermalize and capture neutrons emanating from the radioactive spent nuclear fuel.

Non-Fuel Hardware is defined as Burnable Poison Rod Assemblies (BPRAs), Thimble Plug Devices (TPDs), Control Rod Assemblies (CRAs), Axial Power Shaping Rods (APSRs), Wet Annular Burnable Absorbers (WABAs), Rod Cluster Control Assemblies (RCCAs), water displacement guide tube plugs, ~~and~~ orifice rod assemblies, *and vibration suppressor inserts.*

Planar-Average Initial Enrichment is the average of the distributed fuel rod initial enrichments within a given axial plane of the assembly lattice.

Plain Concrete is concrete that is unreinforced and is of density specified in this FSAR .

~~**Preferential Fuel Loading** is a requirement in the CoC applicable to uniform fuel loading whenever fuel assemblies with significantly different post-irradiation cooling times (≥ 1 year) are to be loaded in the same MPC. Fuel assemblies with the longest post-irradiation cooling time are loaded into fuel storage locations at the periphery of the basket. Fuel assemblies with shorter post-irradiation cooling times are placed toward the center of the basket. Regionalized fuel loading meets the intent of preferential fuel loading. Preferential fuel loading is a requirement in addition to other restrictions in the CoC such as those for non-fuel hardware and damaged fuel containers.~~

Post-Core Decay Time (PCDT) is synonymous with cooling time.

PWR is an acronym for pressurized water reactor.

Reactivity is used synonymously with effective neutron multiplication factor or k-effective.

Regionalized Fuel Loading is a term used to describe an optional fuel loading strategy used in lieu of uniform fuel loading. Regionalized fuel loading allows high heat emitting fuel assemblies to be stored in fuel storage locations in the center of the fuel basket provided lower heat emitting fuel assemblies are stored in the peripheral fuel storage locations. Users choosing regionalized fuel loading must also consider other restrictions in the CoC such as those for non-fuel hardware and damaged fuel containers. ~~Regionalized fuel loading meets the intent of preferential fuel loading.~~*Regionalized fuel loading does not apply to the MPC-68F model.*

SAR is an acronym for Safety Analysis Report (10CFR71).

Table 1.0.1

TERMINOLOGY AND NOTATION

Service Life means the duration for which the component is reasonably expected to perform its intended function, if operated and maintained in accordance with the provisions of this FSAR. Service Life may be much longer than the Design Life because of the conservatism inherent in the codes, standards, and procedures used to design, fabricate, operate, and maintain the component.

***Short-term Operations** means those normal operational evolutions necessary to support fuel loading or fuel unloading operations. These include, but are not limited to MPC cavity drying, helium backfill, MPC transfer, and onsite handling of a loaded HI-TRAC transfer cask.*

Single Failure Proof means that the handling system is designed so that all directly loaded tension and compression members are engineered to satisfy the enhanced safety criteria of Paragraphs 5.1.6(1)(a) and (b) of NUREG-0612.

SNF is an acronym for spent nuclear fuel.

SSC is an acronym for Structures, Systems and Components.

STP is Standard Temperature and Pressure conditions.

***Thermal Capacity** of the HI-STORM system is defined as the amount of heat the storage system, containing an MPC loaded with CSF stored in uniform storage, will actually reject with the ambient environment at the normal temperature and the peak fuel cladding temperature (PCT) at 400°C.*

Thermosiphon is the term used to describe the buoyancy-driven natural convection circulation of helium within the MPC fuel basket.

***Threshold Heat Load** is the maximum heat load during short-term operating conditions up to which no time limit or other restriction is imposed on the operating condition.*

~~FSAR is an acronym for Final Safety Analysis Report (10CFR72).~~

Uniform Fuel Loading is a fuel loading strategy where any authorized fuel assembly may be stored in any fuel storage location, subject to other restrictions in the CoC, such as ~~preferential fuel loading, and~~ those applicable to non-fuel hardware, and damaged fuel containers.

ZPA is an acronym for zero period acceleration.

***ZR** means any zirconium-based fuel cladding material authorized for use in a commercial nuclear power plant reactor. Any reference to Zircaloy fuel cladding in this FSAR applies to any zirconium-based fuel cladding material.*

Table 1.0.2

HI-STORM 100 SYSTEM FSAR REGULATORY COMPLIANCE CROSS REFERENCE MATRIX

Regulatory Guide 3.61 Section and Content	Associated NUREG-1536 Review Criteria	Applicable 10CFR72 or 10CFR20 Requirement	HI-STORM FSAR
1. General Description			
1.1 Introduction	1.III.1 General Description & Operational Features	10CFR72.24(b)	1.1
1.2 General Description	1.III.1 General Description & Operational Features	10CFR72.24(b)	1.2
1.2.1 Cask Character-istics	1.III.1 General Description & Operational Features	10CFR72.24(b)	1.2.1
1.2.2 Operational Features	1.III.1 General Description & Operational Features	10CFR72.24(b)	1.2.2
1.2.3 Cask Contents	1.III.3 DCSS Contents	10CFR72.2(a)(1) 10CFR72.236(a)	1.2.3
1.3 Identification of Agents & Contractors	1.III.4 Qualification of the Applicant	10CFR72.24(j) 10CFR72.28(a)	1.3
1.4 Generic Cask Arrays	1.III.1 General Description & Operational Features	10CFR72.24(c)(3)	1.4
1.5 Supplemental Data	1.III.2 Drawings	10CFR72.24(c)(3)	1.5
NA	1.III.6 Consideration of Transport Requirements	10CFR72.230(b) 10CFR72.236(m)	1.1
NA	1.III.5 Quality Assurance	10CFR72.24(n)	1.3
2. Principal Design Criteria			
2.1 Spent Fuel To Be Stored	2.III.2.a Spent Fuel Specifications	10CFR72.2(a)(1) 10CFR72.236(a)	2.1
2.2 Design Criteria for Environmental Conditions and Natural Phenomena	2.III.2.b External Conditions, 2.III.3.b Structural, 2.III.3.c Thermal	10CFR72.122(b)	2.2
		10CFR72.122(c)	2.2.3.3, 2.2.3.10
		10CFR72.122(b)(1)	2.2
		10CFR72.122(b)(2)	2.2.3.11
		10CFR72.122(h)(1)	2.0

Table 1.0.2 (continued)

HI-STORM 100 SYSTEM FSAR REGULATORY COMPLIANCE CROSS REFERENCE MATRIX

Regulatory Guide 3.61 Section and Content	Associated NUREG-1536 Review Criteria	Applicable 10CFR72 or 10CFR20 Requirement	HI-STORM FSAR
2.2.1 Tornado and Wind Loading	2.III.2.b External Conditions	10CFR72.122(b)(2)	2.2.3.5
2.2.2 Water Level (Flood)	2.III.2.b External Conditions 2.III.3.b Structural	10CFR72.122(b)(2)	2.2.3.6
2.2.3 Seismic	2.III.3.b Structural	10CFR72.102(f) 10CFR72.122(b)(2)	2.2.3.7
2.2.4 Snow and Ice	2.III.2.b External Conditions 2.III.3.b Structural	10CFR72.122(b)	2.2.1.6
2.2.5 Combined Load	2.III.3.b Structural	10CFR72.24(d) 10CFR72.122(b)(2)(ii)	2.2.7
NA	2.III.1 Structures, Systems, and Components Important to Safety	10CFR72.122(a) 10CFR72.24(c)(3)	2.2.4
NA	2.III.2 Design Criteria for Safety Protection Systems	10CFR72.236(g) 10CFR72.24(c)(1) 10CFR72.24(c)(2) 10CFR72.24(c)(4) 10CFR72.120(a) 10CFR72.236(b)	2.0, 2.2
NA	2.III.3.c Thermal	10CFR72.128(a)(4)	2.3.2.2, 4.0
NA	2.III.3f Operating Procedures	10CFR72.24(f) 10CFR72.128(a)(5)	10.0, 8.0
		10CFR72.236(h)	8.0
		10CFR72.24(1)(2)	1.2.1, 1.2.2
		10CFR72.236(1)	2.3.2.1
		10CFR72.24(e) 10CFR72.104(b)	10.0, 8.0
	2.III.3.g Acceptance Tests & Maintenance	10CFR72.122(1) 10CFR72.236(g) 10CFR72.122(f) 10CFR72.128(a)(1)	9.0
2.3 Safety Protection	–	–	2.3

Table 1.0.2 (continued)

HI-STORM 100 SYSTEM FSAR REGULATORY COMPLIANCE CROSS REFERENCE MATRIX

Regulatory Guide 3.61 Section and Content	Associated NUREG-1536 Review Criteria	Applicable 10CFR72 or 10CFR20 Requirement	HI-STORM FSAR
Systems			
2.3.1 General	–	–	2.3
2.3.2 Protection by Multiple Confinement Barriers and Systems	2.III.3.b Structural	10CFR72.236(1)	2.3.2.1
	2.III.3.c Thermal	10CFR72.236(f)	2.3.2.2
	2.III.3.d Shielding/ Confinement/ Radiation Protection	10CFR72.126(a) 10CFR72.128(a)(2)	2.3.5.2
		10CFR72.128(a)(3)	2.3.2.1
		10CFR72.236(d)	2.3.2.1, 2.3.5.2
		10CFR72.236(e)	2.3.2.1
2.3.3 Protection by Equipment & Instrument Selection	2.III.3.d Shielding/ Confinement/ Radiation Protection	10CFR72.122(h)(4) 10CFR72.122(i) 10CFR72.128(a)(1)	2.3.5
2.3.4 Nuclear Criticality Safety	2.III.3.e Criticality	10CFR72.124(a) 10CFR72.236(c) 10CFR72.124(b)	2.3.4, 6.0
2.3.5 Radiological Protection	2.III.3.d Shielding/ Confinement/ Radiation Protection	10CFR72.24(d) 10CFR72.104(a) 10CFR72.236(d)	10.4.1
		10CFR72.24(d) 10CFR72.106(b) 10CFR72.236(d)	10.4.2
		10CFR72.24(m)	2.3.2.1
2.3.6 Fire and Explosion Protection	2.III.3.b Structural	10CFR72.122(c)	2.3.6, 2.2.3.10
2.4 Decommissioning Considerations	2.III.3.h Decommissioning	10CFR72.24(f) 10CFR72.130 10CFR72.236(h)	2.4
	14.III.1 Design	10CFR72.130	2.4
	14.III.2 Cask Decontamination	10CFR72.236(i)	2.4

Table 1.0.2 (continued)

HI-STORM 100 SYSTEM FSAR REGULATORY COMPLIANCE CROSS REFERENCE MATRIX

Regulatory Guide 3.61 Section and Content	Associated NUREG-1536 Review Criteria	Applicable 10CFR72 or 10CFR20 Requirement	HI-STORM FSAR
	14.III.3 Financial Assurance & Record Keeping	10CFR72.30	(1)
	14.III.4 License Termination	10CFR72.54	(1)
3. Structural Evaluation			
3.1 Structural Design	3.III.1 SSC Important to Safety	10CFR72.24(c)(3) 10CFR72.24(c)(4)	3.1
	3.III.6 Concrete Structures	10CFR72.24(c)	3.1
3.2 Weights and Centers of Gravity	3.V.1.b.2 Structural Design Features	–	3.2
3.3 Mechanical Properties of Materials	3.V.1.c Structural Materials	10CFR72.24(c)(3)	3.3
	3.V.2.c Structural Materials		
NA	3.III.2 Radiation Shielding, Confinement, and Subcriticality	10CFR72.24(d) 10CFR72.124(a) 10CFR72.236(c) 10CFR72.236(d) 10CFR72.236(1)	3.4.4.3 3.4.7.3 3.4.10
NA	3.III.3 Ready Retrieval	10CFR72.122(f) 10CFR72.122(h) 10CFR72.122(l)	3.4.4.3
NA	3.III.4 Design-Basis Earthquake	10CFR72.24(c) 10CFR72.102(f)	3.4.7
NA	3.III.5 20 Year Minimum Design Length	10CFR72.24(c) 10CFR72.236(g)	3.4.11 3.4.12
3.4 General Standards for Casks	–	–	3.4
3.4.1 Chemical and Galvanic Reactions	3.V.1.b.2 Structural Design Features	–	3.4.1
3.4.2 Positive Closure	–	–	3.4.2
3.4.3 Lifting Devices	3.V.1.ii(4)(a) Trunnions –	–	*3.4.3,* ~~Appendices 3.E, 3.AC, 3.D~~

Table 1.0.2 (continued)

HI-STORM 100 SYSTEM FSAR REGULATORY COMPLIANCE CROSS REFERENCE MATRIX

Regulatory Guide 3.61 Section and Content	Associated NUREG-1536 Review Criteria	Applicable 10CFR72 or 10CFR20 Requirement	HI-STORM FSAR
3.4.4 Heat	3.V.1.d Structural Analysis	10CFR72.24(d) 10CFR72.122(b)	3.4.4, ~~Appendices 3.I, 3.U, 3.V, 3.W~~
3.4.5 Cold	3.V.1.d Structural Analysis	10CFR72.24(d) 10CFR72.122(b)	3.4.5
3.5 Fuel Rods	–	10CFR72.122(h)(1)	3.5
4. Thermal Evaluation			
4.1 Discussion	4.III Regulatory Requirements	10CFR72.24(c)(3) 10CFR72.128(a)(4) 10CFR72.236(f) 10CFR72.236(h)	4.1
4.2 Summary of Thermal Properties of Materials	4.V.4.b Material Properties	–	4.2
4.3 Specifications for Components	4.IV Acceptance Criteria *ISG-11, Revision 2*	10CFR72.122(h)(1)	4.3
4.4 Thermal Evaluation for Normal Conditions of Storage	4.IV Acceptance Criteria *ISG-11, Revision 2*	10CFR72.24(d) 10CFR72.236(g)	4.4, 4.5
NA	4.IV Acceptance Criteria	10CFR72.24(d) 10CFR72.122(c)	11.1, 11.2
4.5 Supplemental Data	4.V.6 Supplemental Info.	–	–
5. Shielding Evaluation			
5.1 Discussion and Results	–	10CFR72.104(a) 10CFR72.106(b)	5.1
5.2 Source Specification	5.V.2 Radiation Source Definition	–	5.2
5.2.1 Gamma Source	5.V.2.a Gamma Source	–	5.2.1, 5.2.3
5.2.2 Neutron Source	5.V.2.b Neutron Source	–	5.2.2, 5.2.3

Table 1.0.2 (continued)

HI-STORM 100 SYSTEM FSAR REGULATORY COMPLIANCE CROSS REFERENCE MATRIX

Regulatory Guide 3.61 Section and Content	Associated NUREG-1536 Review Criteria	Applicable 10CFR72 or 10CFR20 Requirement	HI-STORM FSAR
5.3 Model Specification	5.V.3 Shielding Model Specification	–	5.3
5.3.1 Description of the Radial and Axial Shielding Configurations	5.V.3.a Configuration of the Shielding and Source	10CFR72.24(c)(3)	5.3.1
5.3.2 Shield Regional Densities	5.V.3.b Material Properties	10CFR72.24(c)(3)	5.3.2
5.4 Shielding Evaluation	5.V.4 Shielding Analysis	10CFR72.24(d) 10CFR72.104(a) 10CFR72.106(b) 10CFR72.128(a)(2) 10CFR72.236(d)	5.4
5.5 Supplemental Data	5.V.5 Supplemental Info.	–	Appendices 5.A, 5.B, and 5.C
6. Criticality Evaluation			
6.1 Discussion and Results	–	–	6.1
6.2 Spent Fuel Loading	6.V.2 Fuel Specification	–	6.1, 6.2
6.3 Model Specifications	6.V.3 Model Specification	–	6.3
6.3.1 Description of Calculational Model	6.V.3.a Configuration	– 10CFR72.124(b) 10CFR72.24(c)(3)	6.3.1
6.3.2 Cask Regional Densities	6.V.3.b Material Properties	10CFR72.24(c)(3) 10CFR72.124(b) 10CFR72.236(g)	6.3.2
6.4 Criticality Calculations	6.V.4 Criticality Analysis	10CFR72.124	6.4
6.4.1 Calculational or Experimental Method	6.V.4.a Computer Programs and 6.V.4.b Multiplication Factor	10CFR72.124	6.4.1

Table 1.0.2 (continued)

HI-STORM 100 SYSTEM FSAR REGULATORY COMPLIANCE CROSS REFERENCE MATRIX

Regulatory Guide 3.61 Section and Content	Associated NUREG-1536 Review Criteria	Applicable 10CFR72 or 10CFR20 Requirement	HI-STORM FSAR
6.4.2 Fuel Loading or Other Contents Loading Optimization	6.V.3.a Configuration	–	6.4.2, *6.3.3*
6.4.3 Criticality Results	6.IV Acceptance Criteria	10CFR72.24(d) 10CFR72.124 10CFR72.236(c)	6.1, 6.2, 6.3.1, 6.3.2
6.5 Critical Benchmark Experiments	6.V.4.c Benchmark Comparisons	–	6.5, Appendix 6.A, 6.4.3
6.6 Supplemental Data	6.V.5 Supplemental Info.	–	Appendices 6.B,6.C, and 6.D
7. Confinement			
7.1 Confinement Boundary	7.III.1 Description of Structures, Systems and Components Important to Safety *ISG-18*	10CFR72.24(c)(3) 10CFR72.24(1)	7.0, 7.1
7.1.1 Confinement Vessel	7.III.2 Protection of Spent Fuel Cladding	10CFR72.122(h)(l)	7.1, 7.1.1, ~~7.2.2~~
7.1.2 Confinement Penetrations	–	–	7.1.2
7.1.3 Seals and Welds	–	–	7.1.3
7.1.4 Closure	7.III.3 Redundant Sealing	10CFR72.236(e)	7.1.1, 7.1.4
7.2 Requirements for Normal Conditions of Storage	7.III.7 Evaluation of Confinement System *ISG-18*	10CFR72.24(d) 10CFR72.236(1)	7.~~2~~*1*
7.2.1 Release of Radioactive	7.III.6 Release of Nuclides to the Environment	10CFR72.24(1)(1)	7.~~2.~~1

Table 1.0.2 (continued)

HI-STORM 100 SYSTEM FSAR REGULATORY COMPLIANCE CROSS REFERENCE MATRIX

Regulatory Guide 3.61 Section and Content	Associated NUREG-1536 Review Criteria	Applicable 10CFR72 or 10CFR20 Requirement	HI-STORM FSAR
Material	7.III.4 Monitoring of Confinement System	10CFR72.122(h)(4) 10CFR72.128(a)(l)	7.1.4
	7.III.5 Instrumentation	10CFR72.24(l) 10CFR72.122(i)	7.1.4
	7.III.8 Annual Dose *ISG-18*	10CFR72.104(a)	~~7.3.5~~*7.1*
7.2.2 Pressurization of Confinement Vessel	–	–	~~7.2.2~~*7.1*
7.3 Confinement Requirements for Hypothetical Accident Conditions	7.III.7 Evaluation of Confinement System *ISG-18*	10CFR72.24(d) 10CFR72.122(b) 10CFR72.236(l)	~~7.3~~*7.1*
7.3.1 Fission Gas Products	–	–	~~7.3.1~~*7.1*
7.3.2 Release of Contents	–*ISG-18*	–	~~7.3.3~~*7.1*
NA	–	10CFR72.106(b)	~~7.3~~*7.1*
7.4 Supplemental Data	7.V Supplemental Info.	–	–
8. Operating Procedures			
8.1 Procedures for Loading the Cask	8.III.1 Develop Operating Procedures	10CFR72.40(a)(5)	8.1 to 8.5
	8.III.2 Operational Restrictions for ALARA	10CFR72.24(e) 10CFR72.104(b)	8.1.5
	8.III.3 Radioactive Effluent Control	10CFR72.24(1)(2)	8.1.5, 8.5.2
	8.III.4 Written Procedures	10CFR72.212(b)(9)	8.0
	8.III.5 Establish Written Procedures and Tests	10CFR72.234(f)	8.0 Introduction

Table 1.0.2 (continued)

HI-STORM 100 SYSTEM FSAR REGULATORY COMPLIANCE CROSS REFERENCE MATRIX

Regulatory Guide 3.61 Section and Content	Associated NUREG-1536 Review Criteria	Applicable 10CFR72 or 10CFR20 Requirement	HI-STORM FSAR
	8.III.6 Wet or Dry Loading and Unloading Compatibility	10CFR72.236(h)	8.0 Introduction
	8.III.7 Cask Design to Facilitate Decon	10CFR72.236(i)	8.1, 8.3
8.2 Procedures for Unloading the Cask	8.III.1 Develop Operating Procedures	10CFR72.40(a)(5)	8.3
	8.III.2 Operational Restrictions for ALARA	10CFR72.24(e) 10CFR72.104(b)	8.3
	8.III.3 Radioactive Effluent Control	10CFR72.24(1)(2)	8.3.3
	8.III.4 Written Procedures	10CFR72.212(b)(9)	8.0
	8.III.5 Establish Written Procedures and Tests	10CFR72.234(f)	8.0
	8.III.6 Wet or Dry Loading and Unloading Compatibility	10CFR72.236(h)	8.0
	8.III.8 Ready Retrieval	10CFR72.122(1)	8.3
8.3 Preparation of the Cask	–	–	8.3.2
8.4 Supplemental Data	–	–	Tables 8.1.1 to 8.1.10
NA	8.III.9 Design to Minimize Radwaste	10CFR72.24(f) 10CFR72.128(a)(5)	8.1, 8.3
	8.III.10 SSCs Permit Inspection, Maintenance, and Testing	10CFR72.122(f)	Table 8.1.6
9. Acceptance Criteria and Maintenance Program			
9.1 Acceptance Criteria	9.III.1.a Preoperational Testing & Initial Operations	10CFR72.24(p)	8.1, 9.1
	9.III.1.c SSCs Tested and Maintained to Appropriate Quality Standards	10CFR72.24(c) 10CFR72.122(a)	9.1
	9.III.1.d Test Program	10CFR72.162	9.1
	9.III.1.e Appropriate Tests	10CFR72.236(1)	9.1

Table 1.0.2 (continued)

HI-STORM 100 SYSTEM FSAR REGULATORY COMPLIANCE CROSS REFERENCE MATRIX

Regulatory Guide 3.61 Section and Content	Associated NUREG-1536 Review Criteria	Applicable 10CFR72 or 10CFR20 Requirement	HI-STORM FSAR
	9.III.1.f Inspection for Cracks, Pinholes, Voids and Defects	10CFR72.236(j)	9.1
	9.III.1.g Provisions that Permit Commission Tests	10CFR72.232(b)	9.1[2]
9.2 Maintenance Program	9.III.1.b Maintenance	10CFR72.236(g)	9.2
	9.III.1.c SSCs Tested and Maintained to Appropriate Quality Standards	10CFR72.122(f) 10CFR72.128(a)(1)	9.2
	9.III.1.h Records of Maintenance	10CFR72.212(b)(8)	9.2
NA	9.III.2 Resolution of Issues Concerning Adequacy of Reliability	10CFR72.24(i)	[3]
	9.III.1.d Submit Pre-Op Test Results to NRC	10CFR72.82(e)	[4]
	9.III.1.i Casks Conspicuously and Durably Marked	10CFR72.236(k)	9.1.7, 9.1.1.(12)
	9.III.3 Cask Identification		
10. Radiation Protection			
10.1 Ensuring that Occupational Exposures are as Low as Reasonably Achievable (ALARA)	10.III.4 ALARA	10CFR20.1101 10CFR72.24(e) 10CFR72.104(b) 10CFR72.126(a)	10.1
10.2 Radiation Protection Design Features	10.V.1.b Design Features	10CFR72.126(a)(6)	10.2

Table 1.0.2 (continued)

HI-STORM 100 SYSTEM FSAR REGULATORY COMPLIANCE CROSS REFERENCE MATRIX

Regulatory Guide 3.61 Section and Content	Associated NUREG-1536 Review Criteria	Applicable 10CFR72 or 10CFR20 Requirement	HI-STORM FSAR
10.3 Estimated Onsite Collective Dose Assessment	10.III.2 Occupational Exposures	10CFR20.1201 10CFR20.1207 10CFR20.1208 10CFR20.1301	10.3
N/A	10.III.3 Public Exposure	10CFR72.104 10CFR72.106	10.4
	10.III.1 Effluents and Direct Radiation	10CFR72.104	
11. Accident Analyses			
11.1 Off-Normal Operations	11.III.2 Meet Dose Limits for Anticipated Events	10CFR72.24(d) 10CFR72.104(a) 10CFR72.236(d)	11.1
	11.III.4 Maintain Subcritical Condition	10CFR72.124(a) 10CFR72.236(c)	11.1
	11.III.7 Instrumentation and Control for Off-Normal Condition	10CFR72.122(i)	11.1
11.2 Accidents	11.III.1 SSCs Important to Safety Designed for Accidents	10CFR72.24(d)(2) 10CFR72.122b(2) 10CFR72.122b(3) 10CFR72.122(d) 10CFR72.122(g)	11.2
	11.III.5 Maintain Confinement for Accident	10CFR72.236(1)	11.2
	11.III.4 Maintain Subcritical Condition	10CFR72.124(a) 10CFR72.236(c)	11.2, 6.0
	11.III.3 Meet Dose Limits for Accidents	10CFR72.24(d)(2) 10CFR72.24(m) 10CFR72.106(b)	11.2, 5.1.2, 7.3
	11.III.6 Retrieval	10CFR72.122(l)	8.3

Table 1.0.2 (continued)

HI-STORM 100 SYSTEM FSAR REGULATORY COMPLIANCE CROSS REFERENCE MATRIX

Regulatory Guide 3.61 Section and Content	Associated NUREG-1536 Review Criteria	Applicable 10CFR72 or 10CFR20 Requirement	HI-STORM FSAR
	11.III.7 Instrumentation and Control for Accident Conditions	10CFR72.122(i)	(5)
NA	11.III.8 Confinement Monitoring	10CFR72.122h(4)	7.1.4
12. Operating Controls and Limits			
12.1 Proposed Operating Controls and Limits	–	10CFR72.44(c)	12.0
	12.III.1.e Administrative Controls	10CFR72.44(c)(5)	12.0
12.2 Development of Operating Controls and Limits	12.III.1 General Requirement for Technical Specifications	10CFR72.24(g) 10CFR72.26 10CFR72.44(c) 10CFR72 Subpart E 10CFR72 Subpart F	12.0
12.2.1 Functional and Operating Limits, Monitoring Instruments, and Limiting Control Settings	12.III.1.a Functional/ Operating Units, Monitoring Instruments and Limiting Controls	10CFR72.44(c)(1)	Appendix 12.A
12.2.2 Limiting Conditions for Operation	12.III.1.b Limiting Controls	10CFR72.44(c)(2)	Appendix 12.A
	12.III.2.a Type of Spent Fuel	10CFR72.236(a)	Appendix 12.A
	12.III.2.b Enrichment		
	12.III.2.c Burnup		
	12.III.2.d Minimum Acceptance Cooling Time		
	12.III.2.f Maximum Spent Fuel Loading Limit		

Table 1.0.2 (continued)

HI-STORM 100 SYSTEM FSAR REGULATORY COMPLIANCE CROSS REFERENCE MATRIX

Regulatory Guide 3.61 Section and Content	Associated NUREG-1536 Review Criteria	Applicable 10CFR72 or 10CFR20 Requirement	HI-STORM FSAR
	12.III.2g Weights and Dimensions		
	12.III.2.h Condition of Spent Fuel		
	12.III.2e Maximum Heat Dissipation	10CFR72.236(a)	Appendix 12.A
	12.III.2.i Inerting Atmosphere Requirements	10CFR72.236(a)	Appendix 12.A
12.2.3 Surveillance Specifications	12.III.1.c Surveillance Requirements	10CFR72.44(c)(3)	Chapter 12
12.2.4 Design Features	12.III.1.d Design Features	10CFR72.44(c)(4)	Chapter 12
12.2.4 Suggested Format for Operating Controls and Limits	–	–	Appendix 12.A
NA	12.III.2 SCC Design Bases and Criteria	10CFR72.236(b)	2.0
NA	12.III.2 Criticality Control	10CFR72.236(c)	2.3.4, 6.0
NA	12.III.2 Shielding and Confinement	10CFR20 10CFR72.236(d)	2.3.5, 7.0, 5.0, 10.0
NA	12.III.2 Redundant Sealing	10CFR72.236(e)	7.1, 2.3.2
NA	12.III.2 Passive Heat Removal	10CFR72.236(f)	2.3.2.2, 4.0
NA	12.III.2 20 Year Storage and Maintenance	10CFR72.236(g)	1.2.1.5, 9.0, 3.4.10, 3.4.11
NA	12.III.2 Decontamination	10CFR72.236(i)	8.0, 10.1
NA	12.III.2 Wet or Dry Loading	10CFR72.236(h)	8.0
NA	12.III.2 Confinement Effectiveness	10CFR72.236(j)	9.0
NA	12.III.2 Evaluation for Confinement	10CFR72.236(l)	7.1, 7.2, 9.0

Table 1.0.2 (continued)

HI-STORM 100 SYSTEM FSAR REGULATORY COMPLIANCE CROSS REFERENCE MATRIX

Regulatory Guide 3.61 Section and Content	Associated NUREG-1536 Review Criteria	Applicable 10CFR72 or 10CFR20 Requirement	HI-STORM FSAR
13. Quality Assurance			
13.1 Quality Assurance	13.III Regulatory Requirements	10CFR72.24(n) *10CFR72.140(d)*	13.0
	13.IV Acceptance Criteria	10CFR72, Subpart G	

Notes:

(1) The stated requirement is the responsibility of the licensee (i.e., utility) as part of the ISFSI pad and is therefore not addressed in this application.

(2) It is assumed that approval of the FSAR by the NRC is the basis for the Commission's acceptance of the tests defined in Chapter 9.

(3) Not applicable to HI-STORM 100 System. The functional adequacy of all important to safety components is demonstrated by analyses.

(4) The stated requirement is the responsibility of licensee (i.e., utility) as part of the ISFSI and is therefore not addressed in this application.

(5) The stated requirement is not applicable to the HI-STORM 100 System. No monitoring is required for accident conditions.

"—" There is no corresponding NUREG-1536 criteria, no applicable 10CFR72 or 10CFR20 regulatory requirement, or the item is not addressed in the FSAR.

"NA" There is no Regulatory Guide 3.61 section that corresponds to the NUREG-1536, 10CFR72, or 10CFR20 requirement being addressed.

Table 1.0.3

HI-STORM 100 SYSTEM FSAR CLARIFICATIONS AND EXCEPTIONS TO NUREG-1536

NUREG-1536 Requirement	Alternate Method to Meet NUREG-1536 Intent	Justification
2.V.2.(b)(1) "The NRC accepts as the maximum and minimum "normal" temperatures the highest and lowest ambient temperatures recorded in each year, averaged over the years of record."	Exception: Section 2.2.1.4 for environmental temperatures utilizes an upper bounding value of 80°F on the annual average ambient temperatures for the United States.	The 80°F temperature set forth in Table 2.2.2 is greater than the annual average ambient temperature at any location in the continental United States. Inasmuch as the primary effect of the environmental temperature is on the computed fuel cladding temperature to establish long-term fuel cladding integrity, the annual average ambient temperature for each ISFSI site should be below 80°F. The large thermal inertia of the HI-STORM 100 System ensures that the daily fluctuations in temperatures do not affect the temperatures of the system. Additionally, the 80°F ambient temperature is combined with insolation in accordance with 10CFR71.71 averaged over 24 hours.
2.V.2.(b)(3)(f) "10CFR Part 72 identifies several other natural phenomena events (including seiche, tsunami, and hurricane) that should be addressed for spent fuel storage."	Clarification: A site-specific safety analysis of the effects of seiche, tsunami, and hurricane on the HI-STORM 100 System must be performed prior to use if these events are applicable to the site.	In accordance with NUREG-1536, 2.V.(b)(3)(f), if seiche, tsunami, and hurricane are not addressed in the SAR and they prove to be applicable to the site, a safety analysis is required prior to approval for use of the DCSS under either a site specific, or general license.

Table 1.0.3 (continued)

HI-STORM 100 SYSTEM FSAR CLARIFICATIONS AND EXCEPTIONS TO NUREG-1536

NUREG-1536 Requirement	Alternate Method to Meet NUREG-1536 Intent	Justification
3.V.1.d.i.(2)(a), page 3-11, "Drops with the axis generally vertical should be analyzed for both the conditions of a flush impact and an initial impact at a corner of the cask..."	Clarification: As stated in NUREG-1536, 3.V.(d), page 3-11, "Generally, applicants establish the design basis in terms of the maximum height to which the cask is lifted outside the spent fuel building, or the maximum deceleration that the cask could experience in a drop." The maximum deceleration for a corner drop is specified as 45g's for the HI-STORM overpack. No carry height limit is specified for the corner drop.	In Chapter 3, the MPC and HI-STORM overpack are evaluated under a 45g radial loading. A 45g axial loading on the MPC is bounded by the analysis presented in the HI-STAR FSAR, Docket 72-1008, under a 60g loading, and is not repeated in this FSAR. In Chapter 3, the HI-STORM overpack is evaluated under a 45g axial loading. Therefore, the HI-STORM overpack and MPC are qualified for a 45g loading as a result of a corner drop. Depending on the design of the lifting device, the type of rigging used, the administrative vertical carry height limit, and the stiffness of the impacted surface, site-specific analyses may be required to demonstrate that the deceleration limit of 45g's is not exceeded.
3.V.2.b.i.(1), Page 3-19, Para. 1, "All concrete used in storage cask system ISFSIs, and subject to NRC review, should be reinforced..." 3.V.2.b.i.(2)(b), Page 3-20, Para. 1, "The NRC accepts the use of ACI 349 for the design, material selection and specification, and construction of all reinforced concrete structures that are not addressed within the scope of ACI 359". 3.V.2.c.i, Page 3-22, Para. 3, "Materials and material properties used for the design and construction of reinforced concrete structures important to safety but not within the scope of ACI 359 should comply with the requirements of ACI 349".	Exception: The HI-STORM overpack concrete is not reinforced. However, ACI 349 [1.0.4] is used for the material selection and specification, and construction of the plain concrete. Appendix 1.D provides the relevant sections of ACI 349 applicable to the plain concrete in the overpack. ACI 318-95 [1.0.5] is used for the calculation of the compressive strength of the plain concrete.	Concrete is provided in the HI-STORM overpack solely for the purpose of radiation shielding during normal operations. During lifting and handling operations and under certain accident conditions, the compressive strength of the concrete (which is not impaired by the absence of reinforcement) is utilized. However, since the structural reliance under loadings which produce section flexure and tension is entirely on the steel structure of the overpack, reinforcement in the concrete will serve no useful purpose. To ensure the quality of the shielding concrete, all relevant provisions of ACI 349 are imposed as clarified in Appendix 1.D. In addition, the temperature limits for normal and off-normal condition from ACI 349 will be imposed.

Table 1.0.3 (continued)

HI-STORM 100 SYSTEM FSAR CLARIFICATIONS AND EXCEPTIONS TO NUREG-1536

NUREG-1536 Requirement	Alternate Method to Meet NUREG-1536 Intent	Justification
		Finally, the Fort St. Vrain ISFSI (Docket No. 72-9) also utilized plain concrete for shielding purposes, which is important to safety.
3.V.3.b.i.(2), Page 3-29, Para. 1, "The NRC accepts the use of ANSI/ANS-57.9 (together with the codes and standards cited therein) as the basic reference for ISFSI structures important to safety that are not designed in accordance with Section III of the ASME B&PV Code."	Clarification: The HI-STORM overpack steel structure is designed in accordance with the ASME B&PV Code, Section III, Subsection NF, Class 3. Any exceptions to the Code are listed in Table 2.2.15.	The overpack structure is a steel weldment consisting of "plate and shell type" members. As such, it is appropriate to design the structure to Section III, Class 3 of Subsection NF. The very same approach has been used in the structural evaluation of the "intermediate shells" in the HI-STAR 100 overpack (Docket Number 72-1008) previously reviewed and approved by the USNRC.
4.V.5, Page 4-2 "for each fuel type proposed for storage, the DCSS should ensure a very low probability (e.g., 0.5 percent per fuel rod) of cladding breach during long-term storage." 4.V.1, Page 4-3, Para. 1 "the staff should verify that cladding temperatures for each fuel type proposed for storage will be below the expected damage thresholds for normal conditions of storage." 4.V.1, Page 4-3, Para. 2 "fuel cladding limits for each fuel type should be defined in the SAR with thermal restrictions in the DCSS technical specifications." 4.V.1, Page 4-3, Para. 4 "the applicant should verify that these cladding temperature limits are appropriate for all fuel types proposed for storage, and that the fuel cladding temperatures	Clarification: As described in Section 4.3, all fuel array types authorized for storage *are assigned a single peak fuel cladding temperature limit.* ~~have been evaluated for the peak fuel cladding temperature limit.~~	As described in Section 4.3, all fuel array types authorized for storage have been evaluated for the peak *normal* fuel cladding temperature limit *of 400°C.* ~~All major variations in fuel parameters are considered in the determination of the peak fuel cladding temperature limits. Minor variations in fuel parameters within an array type are bounded by the conservative determination of the peak fuel cladding temperature limit.~~

Table 1.0.3 (continued)

HI-STORM 100 SYSTEM FSAR CLARIFICATIONS AND EXCEPTIONS TO NUREG-1536

NUREG-1536 Requirement	Alternate Method to Meet NUREG-1536 Intent	Justification
will remain below the limit for facility operations (e.g., fuel transfer) and the worst-case credible accident."		
4.V.4.a, Page 4-6, Para. 3 "applicants seeking NRC approval of specific internal convection models should propose, in the SAR, a comprehensive test program to demonstrate the adequacy of the cask design and validation of the convection models."	Exception: ~~The natural convection model described in Subsection 4.4.1. is based on classical correlations for natural convection in differentially heated cavities which have been validated by many experimental studies. Therefore, n~~*N*o additional test program is proposed.	*The HI-STORM System FLUENT computational fluid dynamics model has been benchmarked against data from an in-service spent fuel storage cask and very good agreement was found.*~~Many experimental studies of this mechanism have been performed by others and reported in open literature sources. As discussed in Subsection 4.4.1, natural convection has been limited to the relatively large MPC basket to shell peripheral gaps. Subsection 4.4.1 provides sufficient references to experiments which document the validity of the classical correlation used in the analysis.~~
4.V.4.a, Page 4-6, Para. 6 "the basket wall temperature of the hottest assembly can then be used to determine the peak rod temperature of the hottest assembly using the Wooten-Epstein correlation."	Clarification: As discussed in Subsection 4.4.2, conservative maximum fuel temperatures are obtained directly from the cask thermal analysis. The peak fuel cladding temperatures are then used to determine the corresponding peak basket wall temperatures using a finite-element based update of Wooten-Epstein (described in Subsection 4.4.1.1.2)	The finite-element based thermal conductivity is greater than a Wooten-Epstein based value. This larger thermal conductivity minimizes the fuel-to-basket temperature difference. Since the basket temperature is less than the fuel temperature, minimizing the temperature difference conservatively maximizes the basket wall temperature.

Table 1.0.3 (continued)

HI-STORM 100 SYSTEM FSAR CLARIFICATIONS AND EXCEPTIONS TO NUREG-1536

NUREG-1536 Requirement	Alternate Method to Meet NUREG-1536 Intent	Justification
~~4.V.4.b, Page 4-7, Para. 2 "if the thermal model is axisymmetric or three-dimensional, the longitudinal thermal conductivity should generally be limited to the conductivity of the cladding (weighted fractional area) within the fuel assembly."~~	~~Clarification: As described in Subsection 4.4.1.1.4, the axial thermal conductivity of the fuel basket is set equal to the cross-sectional thermal conductivity.~~	~~Due to the large number of gaps in the cross-sectional heat transfer paths, use of the fuel basket cross-sectional thermal conductivity for the axial thermal conductivity severely underpredicts the axial thermal conductivity of the fuel basket region. This imposed axial thermal conductivity restriction is even more limiting than that imposed by this requirement of NUREG-1536.~~
4.V.4.b, Page 4-7, Para. 2 "high burnup effects should also be considered in determining the fuel region effective thermal conductivity."	Exception: All calculations of fuel assembly effective thermal conductivities, described in Subsection 4.4.1.1.2, use nominal fuel design dimensions, neglecting wall thinning associated with high burnup.	Within Subsection 4.4.1.1.2, the calculated effective thermal conductivities based on nominal design fuel dimensions are compared with available literature values and are demonstrated to be conservative by a substantial margin.
4.V.4.c, Page 4-7, Para. 5 "a heat balance on the surface of the cask should be given and the results presented."	Clarification: No additional heat balance is performed or provided.	The FLUENT computational fluid dynamics program used to perform evaluations of the HI-STORM Overpack and HI-TRAC transfer cask, which uses a discretized numerical solution algorithm, enforces an energy balance on all discretized volumes throughout the computational domain. This solution method, therefore, ensures a heat balance at the surface of the cask.

Table 1.0.3 (continued)

HI-STORM 100 SYSTEM FSAR CLARIFICATIONS AND EXCEPTIONS TO NUREG-1536

NUREG-1536 Requirement	Alternate Method to Meet NUREG-1536 Intent	Justification
4.V.5.a, Page 4-8, Para. 2 "the SAR should include input and output file listings for the thermal evaluations."	Exception: No input or output file listings are provided in Chapter 4.	A complete set of computer program input and output files would be in excess of three hundred pages. All computer files are considered proprietary because they provide details of the design and analysis methods. In order to minimize the amount of proprietary information in the FSAR, computer files are provided in the proprietary calculation packages.
4.V.5.c, Page 4-10, Para. 3 "free volume calculations should account for thermal expansion of the cask internal components and the fuel when subjected to accident temperatures.	Exception: All free volume calculations use nominal ~~confinement boundary~~ dimensions *with the results reduced by 5% to account for thermal expansion.*~~, but the volume occupied by the MPC internals (i.e., fuel assemblies, fuel basket, etc.) are calculated using maximum weights and minimum densities.~~	~~Calculating the volume occupied by the MPC internals (i.e., fuel assemblies, fuel basket, etc.) using maximum weights and minimum densities conservatively overpredicts the volume occupied by the internal components and correspondingly~~ *The use of a 5% volume reduction* underpredicts the remaining free volume.
~~7.V.4.e, Page 7-7, Para. 2 and 3 "Because the leak is assumed to be instantaneous, the plume meandering factor of Regulatory Guide 1.145 is not typically applied." and "Note that for an instantaneous release (and instantaneous exposure), the time that an individual remains at the controlled area boundary is not a factor in the dose calculation."~~ *7.V.4 "Confinement Analysis. Review the applicant's confinement analysis and the resulting annual dose at the controlled area boundary."*	Exception: ~~As described in Section 7.3, in lieu of an instantaneous release, the assumed leakage rate is set equal to the leakage rate acceptance criteria ($5x10^{-6}$ atm-cm^3/s) plus 50% for conservatism, which yields $7.5x10^{-6}$ atm-cm^3/s. Because the release is assumed to be a leakage rate, the individual is assumed to be at the controlled area boundary for 720 hours. Additionally, the atmospheric dispersion factors of Regulatory Guide 1.145 are applied.*~~*No confinement analysis is performed and no effluent dose at the controlled area boundary is calculated.*	The MPC uses redundant closures to assure that there is no release of radioactive materials under all credible conditions. Analyses presented in Chapters 3 and 11 demonstrate that the confinement boundary does not degrade under all normal, off-normal, and accident conditions. Multiple inspection methods are used to verify the integrity of the confinement boundary (e.g., ~~helium leakage, hydrostatic, and volumetric weld inspection~~*non-destructive examination, pressure testing, and fabrication shop leakage testing*). *Pursuant to ISG-18, the Holtec MPC is constructed in a manner that supports leakage from the confinement boundary being non-credible. Therefore, no confinement analysis is required.*

Table 1.0.3 (continued)

HI-STORM 100 SYSTEM FSAR CLARIFICATIONS AND EXCEPTIONS TO NUREG-1536

NUREG-1536 Requirement	Alternate Method to Meet NUREG-1536 Intent	Justification
9.V.1.a, Page 9-4, Para. 4 "Acceptance criteria should be defined in accordance with NB/NC-5330, "Ultrasonic Acceptance Standards"."	Clarification: Section 9.1.1.1 and the Design Drawings specify that the ASME Code, Section III, Subsection NB, Article NB-5332 will be used for the acceptance criteria for the volumetric examination of the MPC lid-to-shell weld.	In accordance with the first line on page 9-4, the NRC endorses the use of "...appropriate acceptance criteria as defined by either the ASME code, or an alternative approach..." The ASME Code, Section III, Subsection NB, Paragraph NB-5332 is appropriate acceptance criteria for pre-service examination.
9.V.1.d, Para. 1 "Tests of the effectiveness of both the gamma and neutron shielding may be required if, for example, the cask contains a poured lead shield or a special neutron absorbing material."	Exception: Subsection 9.1.5 describes the control of special processes, such as neutron shield material installation, to be performed in lieu of scanning or probing with neutron sources.	The dimensional compliance of all shielding cavities is verified by inspection to design drawing requirements prior to shield installation. The Holtite-A shield material is installed in accordance with written, approved, and qualified special process procedures. The composition of the Holtite-A is confirmed by inspection and tests prior to first use. Following the first loading for the HI-TRAC transfer cask and each HI-STORM overpack, a shield effectiveness test is performed in accordance with written approved procedures, as specified in Section 9.1.
13.III, " the application must include, at a minimum, a description that satisfies the requirements of 10 CFR Part 72, Subpart G, 'Quality Assurance'..."	*Exception: Section 13.0 incorporates the NRC-approved Holtec International Quality Assurance Program Manual by reference rather than describing the Holtec QA program in detail.*	*The NRC has approved Revision 13 of the Holtec Quality Assurance Program Manual under 10 CFR 71 (NRC QA Program Approval for Radioactive Material Packages No. 0784, Rev. 3). Pursuant to 10 CFR 72.140(d), Holtec will apply this QA program to all important-to-safety dry storage cask activities. Incorporating the Holtec QA Program Manual by reference eliminates duplicate documentation.*

Table 1.0.3 (continued)

HI-STORM 100 SYSTEM FSAR CLARIFICATIONS AND EXCEPTIONS TO NUREG-1536

NUREG-1536 Requirement	Alternate Method to Meet NUREG-1536 Intent	Justification
~~ISG-15, Section X.5.4.2, "No more than 1% of the rods in an assembly have peak cladding oxide thicknesses greater than 8o micrometers and no more than 3% of the rods in an assembly have peak cladding oxide thicknesses greater than 70 micrometers. A high burnup fuel assembly should be treated as potentially damaged fuel if the assembly does not meet both of the above criteria of if the fuel assembly contains fuel rods with oxide that has become detached or spalled from the cladding.~~	~~The Fuel Cladding Oxide Thickness Evaluation Program in Section 5.0 of Appendix A to the CoC provides an equation to calculate the maximum allowable high burnup fuel cladding oxide thickness, based on fuel assembly type.~~	~~FSAR Appendix 4.A, Section 4.A.9 provides the justification for this deviation form NUREG-1536 (ISG-15).~~

1.1 INTRODUCTION

HI-STORM 100 (acronym for Holtec International Storage and Transfer Operation Reinforced Module) is a spent nuclear fuel storage system designed to be in full compliance with the requirements of 10CFR72. The annex "100" is a model number designation which denotes a system weighing over 100 tons. The HI-STORM 100 System consists of a sealed metallic canister, herein abbreviated as the "MPC", contained within an overpack. Its design features are intended to simplify and reduce on-site SNF loading, handling, and monitoring operations, and to provide for radiological protection and maintenance of structural and thermal safety margins.

The HI-STORM 100S overpack is a variant of the HI-STORM 100 overpack and has its own set of drawings in Section 1.5. The "S" suffix indicates an enhanced overpack design, as described later in this section. The HI-STORM 100S accepts the same MPCs and fuel types as the HI-STORM 100 and the basic structural, shielding, and thermal-hydraulic characteristics remain unchanged. Hereafter in this FSAR reference to HI-STORM 100 System or the HI-STORM overpack is construed to apply to both the HI-STORM 100 and the HI-STORM 100S. Where necessary, the text distinguishes between the two overpack designs. See Figures 1.1.1A and 1.1.3A for a pictorial view of the HI-STORM 100S overpack design.

The HI-STORM 100A overpack is a third variant of the HI-STORM 100 family and is specially outfitted with an extended baseplate and gussets to enable the overpack to be anchored to the ISFSI pad in high seismic applications. In the following, the modified structure of the HI-STORM 100A, in each of four quadrants, is denoted as a "sector lug." The HI-STORM 100A design is also applicable to the HI-STORM 100S overpack, in which case the assembly would be named HI-STORM 100SA. Hereafter in the text, discussion of HI-STORM 100A applies to both the standard (HI-STORM 100A) and short (HI-STORM 100SA) overpacks, unless otherwise clarified.

The HI-STORM 100 System is designed to accommodate a wide variety of spent nuclear fuel assemblies in a single overpack design by utilizing different MPCs. The external dimensions of all MPCs are identical to allow the use of a single overpack. Each of the MPCs has different internals (baskets) to accommodate distinct fuel characteristics. Each MPC is identified by the maximum quantity of fuel assemblies it is capable of receiving. The MPC-24, MPC-24E, and MPC-24EF contain a maximum of 24 PWR fuel assemblies; the MPC-32 *and MPC-32F* contains a maximum of 32 PWR fuel assemblies; and the MPC-68, MPC-68F, and MPC-68FF contain a maximum of 68 BWR fuel assemblies.

The HI-STORM overpack is constructed from a combination of steel and concrete, both of which are materials with long, proven histories of usage in nuclear applications. The HI-STORM overpack incorporates and combines many desirable features of previously-approved concrete and metal module designs. In essence, the HI-STORM overpack is a hybrid of metal and concrete systems, with the design objective of emulating the best features and dispensing with the drawbacks of both. The HI-STORM overpack is best referred to as a METCON™ (metal/concrete composite) system.

Figures 1.1.1 and 1.1.1A show the HI-STORM 100 with two of its major constituents, the MPC and the storage overpack, in a cut-away view. The MPC, shown partially withdrawn from the storage overpack, is an integrally welded pressure vessel designed to meet the stress limits of the ASME Boiler and Pressure Vessel Code, Section III, Subsection NB [1.1.1]. The MPC defines the confinement boundary for the stored spent nuclear fuel assemblies with respect to 10CFR72 requirements and attendant review considerations. The HI-STORM 100 storage overpack provides mechanical protection, cooling, and radiological shielding for the contained MPC.

In essence, the HI-STORM 100 System is the storage-only counterpart of the HI-STAR 100 System (Docket Numbers 72-1008 (Ref. [1.1.2]) and 71-9261 (Ref. [1.1.3])). Both HI-STORM and HI-STAR are engineered to house identical MPCs. Since the MPC is designed to meet the requirements of both 10CFR71 and 10CFR72 for transportation and storage, respectively, the HI-STORM 100 System allows rapid decommissioning of the ISFSI by simply transferring the loaded MPC's directly into HI-STAR 100 overpacks for off-site transport. This alleviates the additional fuel handling steps required by storage-only casks to unload the cask and repackage the fuel into a suitable transportation cask.

In contrast to the HI-STAR 100 overpack, which provides a containment boundary for the SNF during transport, the HI-STORM storage overpack does not constitute a containment or confinement enclosure. The HI-STORM *100* overpack is equipped with large penetrations near its lower and upper extremities to permit natural circulation of air to provide for the passive cooling of the MPC and the contained radioactive material. The HI-STORM *overpack* is engineered to be an effective barrier against the radiation emitted by the stored materials, and an efficiently configured metal/concrete composite to attenuate the loads transmitted to the MPC during a natural phenomena or hypothetical accident event. Other auxiliary functions of the HI-STORM *100* overpack include isolation of the SNF from abnormal environmental or man-made events, such as impact of a tornado borne missile. As the subsequent chapters of this FSAR demonstrate, the HI-STORM overpack is engineered with large margins of safety with respect to cooling, shielding, and mechanical/structural functions.

The HI-STORM 100 System is autonomous inasmuch as it provides SNF and radioactive material confinement, radiation shielding, criticality control and passive heat removal independent of any other facility, structures, or components. The surveillance and maintenance required by the plant's staff is minimized by the HI-STORM 100 System since it is completely passive and is composed of materials with long proven histories in the nuclear industry. The HI-STORM 100 System can be used either singly or as the basic storage module in an ISFSI. The site for an ISFSI can be located either at a reactor or away from a reactor.

The information presented in this report is intended to demonstrate the acceptability of the HI-STORM 100 System for use under the general license provisions of Subpart K by meeting the criteria set forth in 10CFR72.236.

The modularity of the HI-STORM 100 System accrues several advantages. Different MPCs, identical in exterior dimensions, manufacturing requirements, and handling features, but different in their SNF arrangement details, are designed to fit a common overpack. Even though the different MPCs have

fundamentally identical design and manufacturing attributes, qualification of HI-STORM 100 requires consideration of the variations in the characteristics of the MPCs. In most cases, however, it is possible to identify the most limiting MPC geometry and the specific loading condition for the safety evaluation, and the detailed analyses are then carried out for that bounding condition. In those cases where this is not possible, multiple parallel analyses are performed.

The HI-STORM overpack is not engineered for transport and, therefore, will not be submitted for 10CFR Part 71 certification. HI-STORM 100, however, is designed to possess certain key elements of flexibility.

For example:

- The HI-STORM overpack is stored at the ISFSI pad in a vertical orientation which helps minimize the size of the ISFSI and leads to an effective natural convection cooling flow around the MPC.

- The HI-STORM overpack can be loaded with a loaded MPC using the HI-TRAC transfer cask inside the 10CFR50 [1.1.4] facility, prepared for storage, transferred to the ISFSI, and stored in a vertical configuration, or directly loaded using the HI-TRAC transfer cask at or nearby the ISFSI storage pad.

The version of the HI-STORM overpack equipped with sector lugs to anchor it to the ISFSI pad is labeled HI-STORM 100A, shown in Figure 1.1.4. Figure 1.1.5 shows the sector lugs and anchors used to fasten the overpack to the pad in closer view. Details on HI-STORM 100A are presented in the drawing and BOM contained in Section 1.5. Users may employ a double nut arrangement as an option. The HI-STORM 100A overpack will be deployed at those ISFSI sites where the postulated seismic event (defined by the three orthogonal ZPAs) exceeds the maximum limit permitted for free-standing installation. The design of the ISFSI pad and the embedment are necessarily site-specific and the responsibility of the ISFSI owner. These designs shall be in accordance with the requirements specified in Appendix 2.A. The jurisdictional boundary between the anchored cask design and the embedment design is defined in Table 2.0.5. Additional description on the HI-STORM 100A configuration is provided in Subsection 1.2.1.2.1.

The MPC is a multi-purpose SNF storage device both with respect to the type of fuel assemblies and its versatility of use. The MPC is engineered as a cylindrical prismatic structure with square cross section storage cavities. The number of storage locations depends on the type of fuel. Regardless of the storage cell count, the construction of the MPC is fundamentally the same; it is built as a honeycomb of cellular elements positioned within a circumscribing cylindrical canister shell. The manner of cell-to-cell weld-up and cell-to-canister shell interface employed in the MPC imparts extremely high structural stiffness to the assemblage, which is an important attribute for mechanical accident events. Figure 1.1.2 shows an elevation cross section of an MPC.

The MPC is identical to those presented in References [1.1.2] and [1.1.3], except for MPC-24E, 24EF, 32, *32F* and 68FF, until such time as those CoCs are amended to include these additional MPC models. Referencing these documents, as applicable, avoids repetition of information on the

MPCs which is comprehensively set forth in the above-mentioned Holtec International documents docketed with the NRC. However, sufficient information and drawings are presented in this report to maintain clarity of exposition of technical data.

The HI-STORM storage overpack is designed to provide the necessary neutron and gamma shielding to comply with the provisions of 10CFR72 for dry storage of SNF at an ISFSI. Cross sectional views of the HI-STORM storage overpacks are presented in Figures 1.1.3 and 1.1.3A. A HI-TRAC transfer cask is required for loading of the MPC and movement of the loaded MPC from the cask loading area of a nuclear plant spent fuel pool to the storage overpack. The HI-TRAC is engineered to be emplaced with an empty MPC into the cask loading area of nuclear plant spent fuel pools for fuel loading (or unloading). The HI-TRAC/MPC assembly is designed to preclude intrusion of pool water into the narrow annular space between the HI-TRAC and the MPC while the assembly is submerged in the pool water. The HI-TRAC transfer cask also allows dry loading (or unloading) of SNF into the MPC.

To summarize, the HI-STORM 100 System has been engineered to:

- minimize handling of the SNF;
- provide shielding and physical protection for the MPC;
- permit rapid and unencumbered decommissioning of the ISFSI;
- require minimal ongoing surveillance and maintenance by plant staff;
- minimize dose to operators during loading and handling;
- allow transfer of the loaded MPC to a HI-STAR overpack for transportation.

1.2 GENERAL DESCRIPTION OF HI-STORM 100 System

1.2.1 System Characteristics

The basic HI-STORM 100 System consists of interchangeable MPCs providing a confinement boundary for BWR or PWR spent nuclear fuel, a storage overpack providing a structural and radiological boundary for long-term storage of the MPC placed inside it, and a transfer cask providing a structural and radiological boundary for transfer of a loaded MPC from a nuclear plant spent fuel storage pool to the storage overpack. Figure 1.2.1 provides a cross sectional view of the HI-STORM 100 System with an MPC inserted into a storage overpack. Figure 1.2.1A provides a cross sectional view of the HI-STORM 100 System with an MPC inserted into a HI-STORM 100S storage overpack. Each of these components is described below, including information with respect to component fabrication techniques and designed safety features. All structures, systems, and components of the HI-STORM 100 System which are identified as Important to Safety are specified in Table 2.2.6. This discussion is supplemented with a full set of detailed design drawings in Section 1.5.

The HI-STORM 100 System is comprised of three discrete components:

i. multi-purpose canister (MPC)
ii. storage overpack (HI-STORM)
iii. transfer cask (HI-TRAC)

Necessary auxiliaries required to deploy the HI-STORM 100 System for storage are:

i. vacuum drying (or other moisture removal) system
ii. helium (He) backfill system ~~with leakage detector~~
iii. lifting and handling systems
iv welding equipment
v. transfer vehicles/trailer

All MPCs have identical exterior dimensions that render them interchangeable. The outer diameter of the MPC is 68-3/8 inches[†] and the overall length is 190-1/2 inches. See Section 1.5 for the ~~detailed design~~ *MPC* drawings. Due to the differing storage contents of each MPC, the maximum loaded weight differs among MPCs. See Table 3.2.1 for each MPC weight. However, the maximum weight of a loaded MPC is approximately 44-1/2 tons. Tables 1.2.1 and 1.2.2 contain the key *system data and* parameters for the MPCs.

A single, base HI-STORM overpack design is provided which is capable of storing each type of MPC. The overpack inner cavity is sized to accommodate the MPCs. The inner diameter of the

[†] Dimensions discussed in this section are considered nominal values.

overpack inner shell is 73-1/2 inches and the height of the cavity is 191-1/2 inches. The overpack inner shell is provided with channels distributed around the inner cavity to present an inside diameter of 69-1/2 inches. The channels are intended to offer a flexible medium to absorb some of the impact during a non-mechanistic tip-over, while still allowing the cooling air flow through the ventilated overpack. The outer diameter of the overpack is 132-1/2 inches. The overall height of the HI-STORM 100 and the HI-STORM 100S is 239-1/2 inches. There are two versions of the HI-STORM 100S overpack, differing only in height and weight. The HI-STORM 100S(232) is 232 inches high, and the HI-STORM 100S(243) is 243 inches high. The HI-STORM 100S(243) is approximately 10,100 lbs heavier, including concrete. Hereafter in the text, these two versions of the HI-STORM 100S overpack will only be referred to as HI-STORM 100S and will be discussed separately only if the design feature being discussed is different between the two overpacks. See Section 1.5 for drawings. The weight of the overpack without an MPC is approximately 135 tons. See Table 3.2.1 for the detailed weights.

Before proceeding to present detailed physical data on the HI-STORM 100 System, it is of contextual importance to summarize the design attributes which enhance the performance and safety of the system. Some of the principal features of the HI-STORM 100 System which enhance its effectiveness as an SNF storage device and a safe SNF confinement structure are:

- the honeycomb design of the MPC fuel basket;
- the effective distribution of neutron and gamma shielding materials within the system;
- the high heat dissipation capability;
- engineered features to promote convective heat transfer;
- the structural robustness of the steel-concrete-steel overpack construction.

The honeycomb design of the MPC fuel baskets renders the basket into a multi-flange plate weldment where all structural elements (i.e., box walls) are arrayed in two orthogonal sets of plates. Consequently, the walls of the cells are either completely co-planar (i.e., no offset) or orthogonal with each other. There is complete edge-to-edge continuity between the contiguous cells.

Among the many benefits of the honeycomb construction is the uniform distribution of the metal mass of the basket over the entire length of the basket. Physical reasoning suggests that a uniformly distributed mass provides a more effective shielding barrier than can be obtained from a nonuniform basket. In other words, the honeycomb basket is a most effective radiation attenuation device. The complete cell-to-cell connectivity inherent in the honeycomb basket structure provides an uninterrupted heat transmission path, making the MPC an effective heat rejection device.

The composite shell construction in the overpack, steel-concrete-steel, allows ease of fabrication and eliminates the need for the sole reliance on the strength of concrete.

A description of each of the components is provided in the following sections, along with information with respect to its fabrication and safety features. This discussion is supplemented with the full set of drawings in Section 1.5.

1.2.1.1 Multi-Purpose Canisters

The MPCs are welded cylindrical structures as shown in cross sectional views of Figures 1.2.2 through 1.2.4. The outer diameter and cylindrical height of each MPC are fixed. Each spent fuel MPC is an assembly consisting of a honeycombed fuel basket, a baseplate, canister shell, a lid, and a closure ring, as depicted in the MPC cross section elevation view, Figure 1.2.5. The number of spent nuclear fuel storage locations in each of the MPCs depends on the fuel assembly characteristics.

There are ~~seven~~ *eight* MPC models, distinguished by the type and number of fuel assemblies authorized for loading. *Section 1.2.3 and Table 1.2.1 summarize the allowable contents for each MPC model. Section 2.1.9 provides the detailed specifications for the contents authorized for storage in the HI-STORM 10 System.* ~~The MPC-24 is designed to store up to 24 intact PWR fuel assemblies. The MPC-24E is designed to store up to 24 total PWR fuel assemblies including up to four (4) damaged PWR fuel assemblies. The MPC-24EF is designed to store up to 24 total PWR fuel assemblies including up to four (4) damaged PWR fuel assemblies or fuel classified as fuel debris. The MPC-68 is designed to store up to 68 total BWR fuel assemblies including up to 68 damaged Dresden Unit 1 or Humboldt Bay BWR fuel assemblies. Damaged BWR fuel assemblies other than Dresden Unit 1 and Humboldt Bay are limited to 16 fuel storage locations in the MPC-68 with the remainder being intact BWR fuel assemblies, up to a total of 68. The MPC-68F is designed to store up to 68 intact or damaged Dresden Unit 1 and Humboldt Bay BWR fuel assemblies. Up to four of the 68 fuel storage locations in the MPC-68F may be Dresden Unit 1 and Humboldt Bay BWR fuel assemblies classified as fuel debris. The MPC-68FF is designed to store up to 68 total BWR fuel assemblies including up to 16 damaged BWR fuel assemblies. Up to eight (8) of the 16 BWR damaged fuel assembly storage locations may be filled with BWR fuel classified as fuel debris. In addition, all fuel loading combinations permitted in the MPC-68F are also permitted in the MPC-68FF. Design~~ Drawings for ~~all of~~ the MPCs are provided in Section 1.5.

The MPC provides the confinement boundary for the stored fuel. Figure 1.2.6 provides an elevation view of the MPC confinement boundary. The confinement boundary is defined by the MPC baseplate, shell, lid, port covers, and closure ring. The confinement boundary is a strength-welded enclosure of all stainless steel construction.

The PWR MPC-24, MPC-24E and MPC-24EF differ in construction from the MPC-32 *(including the MPC-32F)* and the MPC-68 (including the MPC-68F and MPC-68FF) in one important aspect: the fuel storage cells *in the MPC-24 series* are physically separated from one another by a "flux trap", for criticality control. The PWR MPC-32 *and -32F are* ~~is~~ designed similar to the MPC-68 (without flux traps) and its design includes credit for soluble boron in the MPC water during wet fuel loading and unloading operations for criticality control.

The MPC fuel baskets of non-flux trap construction (namely, MPC-68, MPC-68F, MPC-68FF, ~~and~~ MPC-32, *and MPC-32F*) are formed from an array of plates welded to each other at their intersections. In the flux-trap type fuel baskets (MPC-24, MPC-24E, and MPC-24EF), formed angles are interposed onto the orthogonally configured plate assemblage to create the required flux-trap channels (see MPC-24 and MPC-24E ~~design~~ *fuel basket* drawings in Section 1.5). In both configurations, two key attributes of the basket are preserved:

i. The cross section of the fuel basket simulates a multi-flanged closed section beam, resulting in extremely high bending rigidity.

ii. The principal structural frame of the basket consists of co-planar plate-type members (i.e., no offset).

This structural feature eliminates the source of severe bending stresses in the basket structure by eliminating the offset between the cell walls that must transfer the inertia load of the stored SNF to the basket/MPC interface during the various postulated accident events (e.g., non-mechanistic tipover, uncontrolled lowering of a cask during on-site transfer, or off-site transport events, etc.).

The MPC fuel basket is positioned and supported within the MPC shell by a set of basket supports welded to the inside of the MPC shell. Between the periphery of the basket, the MPC shell, and the basket supports, optional *aluminum* heat conduction elements *(AHCEs)* may *have* ~~be~~ *been* installed *in the early vintage MPCs fabricated, certified, and loaded under the original version or Amendment 1 of the HI-STORM 100 System CoC. The presence of these aluminum heat conduction elements is acceptable for MPCs loaded under the original CoC or Amendment 1, since the governing thermal analysis for Amendment 1 conservatively modeled the AHCEs as restrictions to convective flow in the basket, but took no credit for heat transfer through them. The heat loads authorized under Amendment 1 bound those for the original CoC, with the same MPC design. For MPCs loaded under Amendment 2 or a later version of the HI-STORM 100 CoC, the aluminum heat conduction elements shall not be installed since they were removed from the thermal model in Amendment 2. MPCs both with and without aluminum heat conduction elements installed are compatible with all HI-STORM overpacks. If used,* ~~T~~ *t*hese heat conduction elements are fabricated from thin aluminum alloy 1100 in shapes and a design that allows a snug fit in the confined spaces and ease of installation. If used, the heat conduction elements are installed along the full length of the MPC basket except at the drain pipe location to create a nonstructural thermal connection that facilitates heat transfer from the basket to shell. In their operating condition, the heat conduction elements contact the MPC shell and basket walls.

Lifting lugs attached to the inside surface of the MPC canister shell serve to permit placement of the empty MPC into the HI-TRAC transfer cask. The lifting lugs also serve to axially locate the MPC lid prior to welding. These internal lifting lugs are not used to handle a loaded MPC. Since the MPC lid is installed prior to any handling of a loaded MPC, there is no access to the lifting lugs once the MPC is loaded.

The top end of the MPC incorporates a redundant closure system. Figure 1.2.6 shows the MPC closure details. The MPC lid is a circular plate (fabricated from one piece, or two pieces - split top and bottom) edge-welded to the MPC outer shell. If the two-piece lid design is employed, only the top piece is analyzed as part of the enclosure vessel pressure boundary. The bottom piece acts as a radiation shield and is attached to the top piece with a non-structural, non-pressure retaining weld. The lid is equipped with vent and drain ports that are utilized to remove moisture and air from the MPC, and backfill the MPC with a specified amount of inert gas (helium). The vent and drain ports are covered and seal welded before the closure ring is installed. The closure ring is a circular ring edge-welded to the MPC shell and lid. The MPC lid provides sufficient rigidity to allow the entire MPC loaded with SNF to be lifted by threaded holes in the MPC lid.

To maintain a constant exterior axial length between the PWR MPCs and the BWR MPCs the thickness of the PWR MPCs' lid is ½ inch thinner than the MPC-68's lid to accommodate the longest PWR fuel assembly which is approximately a ½ inch longer than the longest BWR fuel assembly. For fuel assemblies that are shorter than the design basis length, upper and lower fuel spacers (as appropriate) maintain the axial position of the fuel assembly within the MPC basket. The upper fuel spacers are threaded into the underside of the MPC lid as shown in Figure 1.2.5. The lower fuel spacers are placed in the bottom of each fuel basket cell. The upper and lower fuel spacers are designed to withstand normal, off-normal, and accident conditions of storage. An axial clearance of approximately 2 inches is provided to account for the irradiation and thermal growth of the fuel assemblies. The suggested values for the upper and lower fuel spacer lengths are listed in Tables 2.1.9 and 2.1.10 for each fuel assembly type. The actual length of fuel spacers will be determined on a site-specific or fuel assembly-specific basis.

The MPC is constructed entirely from stainless steel alloy materials (except for the neutron absorber and optional aluminum heat conduction elements). No carbon steel parts are permitted in the MPC. Concerns regarding interaction of coated carbon steel materials and various MPC operating environments [1.2.1] are not applicable to the MPC. All structural components in a MPC shall be made of Alloy X, a designation which warrants further explanation.

Alloy X is a material that is expected to be acceptable as a Mined Geological Disposal System (MGDS) waste package and which meets the thermophysical properties set forth in this document.

At this time, there is considerable uncertainty with respect to the material of construction for an MPC that would be acceptable as a waste package for the MGDS. Candidate materials being considered for acceptability by the DOE include:

- Type 316
- Type 316LN
- Type 304
- Type 304LN

The DOE material selection process is primarily driven by corrosion resistance in the potential environment of the MGDS. As the decision regarding a suitable material to meet disposal requirements is not imminent, the MPC design allows the use of any one of the four Alloy X materials.

For the MPC design and analysis, Alloy X (as defined in this FSAR) may be one of the following materials. Only a single alloy from the list of acceptable Alloy X materials may be used in the fabrication of a single MPC basket or shell - the basket and shell may be of different alloys in the same MPC.

- Type 316
- Type 316LN
- Type 304
- Type 304LN

The Alloy X approach is accomplished by qualifying the MPC for all mechanical, structural, neutronic, radiological, and thermal conditions using material thermophysical properties that are the least favorable for the entire group for the analysis in question. For example, when calculating the rate of heat rejection to the outside environment, the value of thermal conductivity used is the lowest for the candidate material group. Similarly, the stress analysis calculations use the lowest value of the ASME Code allowable stress intensity for the entire group. Stated differently, we have defined a material, which is referred to as Alloy X, whose thermophysical properties, from the MPC design perspective, are the least favorable of the candidate materials.

The evaluation of the Alloy X constituents to determine the least favorable properties is provided in Appendix 1.A.

The Alloy X approach is conservative because no matter which material is ultimately utilized in the MPC construction, the Alloy X approach guarantees that the performance of the MPC will exceed the analytical predictions contained in this document.

1.2.1.2 Overpacks

1.2.1.2.1 HI-STORM 100 Overpack (Storage)

The HI-STORM 100 and 100S overpacks are rugged, heavy-walled cylindrical vessels. Figures 1.2.7, 1.2.8, and 1.2.8A provide cross sectional views of the HI-STORM 100 System, showing both of the overpack designs, respectively. The HI-STORM 100A is an anchored variant of the same structure and hereinafter is identified by name only when the discussion specifically applies to the anchored overpack. The HI-STORM 100A differs only in the diameter of the overpack baseplate and the presence of bolt holes and associated anchorage hardware (see Figures 1.1.4 and 1.1.5).The main structural function of the storage overpack is provided by carbon steel, and the main shielding function is provided by plain concrete. The overpack plain concrete is enclosed by cylindrical steel shells, a thick steel baseplate, and a top plate. The overpack lid has

appropriate concrete shielding to provide neutron and gamma attenuation in the vertical direction.

The storage overpack provides an internal cylindrical cavity of sufficient height and diameter for housing an MPC. The inner shell of the overpack has channels attached to its inner diameter. The channels provide guidance for MPC insertion and removal and a flexible medium to absorb impact loads during the non-mechanistic tip-over, while still allowing the cooling air flow to circulate through the overpack. Shims may be attached to channels to allow the proper inner diameter dimension to be obtained.

The storage system has air ducts to allow for passive natural convection cooling of the contained MPC. *A minimum of* ~~F~~four air inlets and four air outlets are located at the lower and upper extremities of the storage system, respectively. The location of the air outlets in the HI-STORM 100 and the HI-STORM 100S design differ in that the outlet ducts for the HI-STORM 100 overpack are located in the overpack body and are aligned vertically with the inlet ducts at the bottom of the overpack body. The air outlet ducts in the HI-STORM 100S are integral to the lid assembly and are not in vertical alignment with the inlet ducts. The location of the air inlet ducts is same for both the HI-STORM 100 and the HI-STORM 100S. The air inlets and outlets are covered by a fine mesh screen to reduce the potential for blockage. Routine inspection of the screens (or, alternatively, temperature monitoring) ensures that blockage of the screens themselves will be detected and removed in a timely manner. Analysis, described in Chapter 11 of this FSAR, evaluates the effects of partial and complete blockage of the air ducts.

The ~~four~~ air inlets and ~~four~~ air outlets are penetrations through the thick concrete shielding provided by the HI-STORM 100 overpack. The outlet air ducts for the HI-STORM 100S overpack, integral to the lid, present a similar break in radial shielding. Within the air inlets and outlets, an array of gamma shield cross plates are installed (see Figure 5.3.19 for a pictorial representation of the gamma shield cross plate designs). These gamma shield cross plates are designed to scatter any particles traveling through the ducts. The result of scattering the particles in the ducts is a significant decrease in the local dose rates around the four air inlets and four air outlets. The configuration of the gamma shield cross plates is such that the increase in the resistance to flow in the air inlets and outlets is minimized. The shielding analysis conservatively credits only the mandatory version of the gamma shield cross plate design because they provide less shielding than the optional design. Conversely, the thermal analysis conservatively evaluates the optional gamma shield cross plate design because it conservatively provides greater resistance to flow than the mandatory design.

Four threaded anchor blocks at the top of the overpack are provided for lifting. The anchor blocks are integrally welded to the radial plates which in turn are full-length welded to the overpack inner shell, outer shell, and baseplate (HI-STORM 100) or the inlet air duct horizontal plates (HI-STORM 100S) (see Figure 1.2.7). The four anchor blocks are located on 90° arcs around the circumference of the overpack. The overpack may also be lifted from the bottom using specially-designed lifting transport devices, including hydraulic jacks, air pads, Hillman rollers, or other design based on site-specific needs and capabilities. Slings or other suitable

devices mate with lifting lugs that are inserted into threaded holes in the top surface of the overpack lid to allow lifting of the overpack lid. After the lid is bolted to the storage overpack main body, these lifting bolts shall be removed and replaced with flush plugs.

The plain concrete between the overpack inner and outer steel shells is specified to provide the necessary shielding properties (dry density) and compressive strength. The concrete shall be in accordance with the requirements specified in Appendix 1.D.

The principal function of the concrete is to provide shielding against gamma and neutron radiation. However, in an implicit manner it helps enhance the performance of the HI-STORM overpack in other respects as well. For example, the massive bulk of concrete imparts a large thermal inertia to the HI-STORM overpack, allowing it to moderate the rise in temperature of the system under hypothetical conditions when all ventilation passages are assumed to be blocked. The case of a postulated fire accident at the ISFSI is another example where the high thermal inertia characteristics of the HI-STORM concrete control the temperature of the MPC. Although the annular concrete mass in the overpack shell is not a structural member, it does act as an elastic/plastic filler of the inter-shell space, such that, while its cracking and crushing under a tip-over accident is not of significant consequence, its deformation characteristics are germane to the analysis of the structural members.

Density and compressive strength are the key parameters which delineate the performance of concrete in the HI-STORM System. The density of concrete used in the inter-shell annulus, pedestal, and HI-STORM lid has been set as defined in Appendix 1.D. For evaluating the physical properties of concrete for completing the analytical models, conservative formulations of Reference [1.0.5] are used.

To ensure the stability of the concrete at temperature, the concrete composition has been specified in accordance with NUREG-1536, "Standard Review Plan for Dry Cask Storage Systems" [1.0.3]. Thermal analyses, presented in Chapter 4, show that the temperatures during normal storage conditions do not threaten the physical integrity of the HI-STORM overpack concrete.

There are two base HI-STORM overpack designs - HI-STORM 100 and HI-STORM 100S. The significant differences between the two are overpack height, MPC pedestal height, location of the air outlet ducts, and the vertical alignment of the inlet and outlet air ducts. The HI-STORM 100 overpack is approximately 240 inches high from the bottom of the baseplate to the top of the lid bolts and 227 inches high without the lid installed. There are two versions of the HI-STORM 100S overpack design, differing only in height and weight. The HI-STORM 100S(232) is approximately 232 inches from the bottom of the baseplate to the top of the lid bolts in its final storage configuration and 211 inches high without the lid installed. The HI-STORM 100S(243) is approximately 243 inches from the bottom of the baseplate to the top of the lid bolts in its final storage configuration and 222 inches high without the lid installed.

The anchored embodiment of the HI-STORM overpack is referred to as HI-STORM 100A. As explained in the foregoing, the HI-STORM overpack is a steel weldment, which makes it a relatively simple matter to extend the overpack baseplate, form lugs, and then anchor the cask to the reinforced concrete structure of the ISFSI. In HI-STORM terminology, these lugs are referred to as "sector lugs." The sector lugs, as shown in Figure 1.1.5 and the drawing in Section 1.5, are formed by extending the HI-STORM overpack baseplate, welding vertical gussets to the baseplate extension and to the overpack outer shell and, finally, welding a horizontal lug support ring in the form of an annular sector to the vertical gussets and to the outer shell. The baseplate is equipped with regularly spaced clearance holes (round or slotted) through which the anchor studs can pass. The sector lugs are bolted to the ISFSI pad using anchor studs that are made of a creep-resistant, high-ductility, environmentally compatible material. The bolts are pre-loaded to a precise axial stress using a "stud tensioner" rather than a torque wrench. Pre-tensioning the anchors using a stud tensioner eliminates any shear stress in the bolt, which is unavoidable if a torquing device is employed (Chapter 3 of the text "Mechanical Design of Heat Exchangers and Pressure Vessel Components", by Arcturus Publishers, 1984, K.P. Singh and A.I. Soler, provides additional information on stud tensioners). The axial stress in the anchors induced by pre-tensioning is kept below 75% of the material yield stress, such that during the seismic event the maximum bolt axial stress remains below the limit prescribed for bolts in the ASME Code, Section III, Subsection NF (for Level D conditions). Figures 1.1.4 and 1.1.5 provide visual depictions of the anchored HI-STORM 100A configuration. This configuration also applies to the HI-STORM 100SA.

The anchor studs pass through liberal clearance holes (circular or slotted) in the sector lugs (0.75" minimum clearance) such that the fastening of the studs to the ISFSI pad can be carried out without mechanical interference from the body of the sector lug. The two clearance hole configurations give the ISFSI pad designer flexibility in the design of the anchor embedment in the ISFSI concrete. The axial force in the anchors produces a compressive load at the overpack/pad interface. This compressive force, F, imputes a lateral load bearing capacity to the cask/pad interface that is equal to μF ($\mu \leq 0.53$ per Table 2.2.8). As is shown in Chapter 3 of this FSAR, the lateral load-bearing capacity of the HI-STORM/pad interface (μF) is many times greater than the horizontal (sliding) force exerted on the cask under the postulated DBE seismic event. Thus, the potential for lateral sliding of the HI-STORM 100A System during a seismic event is precluded, as is the potential for any bending action on the anchor studs.

The seismic loads, however, will produce an overturning moment on the overpack that would cause a redistribution of the compressive contact pressure between the pad and the overpack. To determine the pulsation in the tensile load in the anchor studs and in the interface contact pressure, bounding static analysis of the preloaded configuration has been performed. The results of the static analysis demonstrate that the initial preloading minimizes pulsations in the stud load. A confirmatory non-linear dynamic analysis has also been performed using the time-history methodology described in Chapter 3, wherein the principal nonlinearities in the cask system are incorporated and addressed. The calculated results from the dynamic analysis confirm the static analysis results and that the presence of pre-stress helps minimize the pulsation in the anchor stud stress levels during the seismic event, thus eliminating any concern with regard to fatigue failure under extended and repetitive seismic excitations.

The sector lugs in HI-STORM 100A are made of the same steel material as the baseplate and the shell (SA516- Gr. 70) which helps ensure high quality fillet welds used to join the lugs to the body of the overpack. The material for the anchor studs can be selected from a family of allowable stud materials listed in the ASME Code (Section II). A representative sampling of permitted materials is listed in Table 1.2.7. The menu of materials will enable the ISFSI owner to select a fastener material that is resistant to corrosion in the local ISFSI environment. For example, for ISFSIs located in marine environments (e.g., coastal reactor sites), carbon steel studs would not be recommended without concomitant periodic inspection and coating maintenance programs. Table 1.2.7 provides the chemical composition of several acceptable fastener materials to help the ISFSI owner select the most appropriate material for his site. The two mechanical properties, ultimate strength σ_u and yield strength σ_y are also listed. For purposes of structural evaluations, the lower bound values of σ_u and σ_y from the menu of materials listed in Table 1.2.7 are used (see Table 3.4.10).

As shown in the drawing, the anchor studs are spaced sufficiently far apart such that a practical reinforced concrete pad with embedded receptacles can be designed to carry the axial pull from the anchor studs without overstressing the enveloping concrete monolith. The design specification and supporting analyses in this FSAR are focused on qualifying the overpack structures, including the sector lugs and the anchor studs. The design of the ISFSI pad, and its anchor receptacle will vary from site to site, depending on the geology and seismological characteristics of the sub-terrain underlying the ISFSI pad region. The data provided in this FSAR, however, provide the complete set of factored loads to which the ISFSI pad, its sub-grade, and the anchor receptacles must be designed within the purview of ACI-349-97 [1.0.4]. Detailed requirements on the ISFSI pads for anchored casks are provided in Section 2.0.4.

1.2.1.2.2 HI-TRAC (Transfer Cask) - Standard Design

Like the storage overpack, the HI-TRAC transfer cask is a rugged, heavy-walled cylindrical vessel. The main structural function of the transfer cask is provided by carbon steel, and the main neutron and gamma shielding functions are provided by water and lead, respectively. The transfer cask is a steel, lead, steel layered cylinder with a water jacket attached to the exterior. Figure 1.2.9 provides a typical cross section of the standard design HI-TRAC-125 with the pool lid installed. See Section 1.2.1.2.3 for discussion of the optional HI-TRAC 125D design.

The transfer cask provides an internal cylindrical cavity of sufficient size for housing an MPC. The top lid of the HI-TRAC 125 has additional neutron shielding to provide neutron attenuation in the vertical direction (from SNF in the MPC below). The MPC access hole through the HI-TRAC top lid is provided to allow the lowering/raising of the MPC between the HI-TRAC transfer cask, and the HI-STORM or HI-STAR overpacks. The standard design HI-TRAC (comprised of HI-TRAC 100 and HI-TRAC 125) is provided with two bottom lids, each used separately. The pool lid is bolted to the bottom flange of the HI-TRAC and is utilized during MPC fuel loading and sealing operations. In addition to providing shielding in the axial direction, the pool lid incorporates a seal that is designed to hold clean demineralized water in the HI-TRAC inner cavity, thereby preventing contamination of the exterior of the MPC by the contaminated fuel pool water. After the MPC has been drained, dried, and sealed, the pool lid is removed and the HI-TRAC transfer lid is attached (standard design only). The transfer lid

incorporates two sliding doors that allow the opening of the HI-TRAC bottom for the MPC to be raised/lowered. Figure 1.2.10 provides a cross section of the HI-TRAC with the transfer lid installed.

In the standard design, trunnions are provided for lifting and rotating the transfer cask body between vertical and horizontal positions. The lifting trunnions are located just below the top flange and the pocket trunnions are located above the bottom flange. The two lifting trunnions are provided to lift and vertically handle the HI-TRAC, and the pocket trunnions provide a pivot point for the rotation of the HI-TRAC for downending or upending.

Two standard design HI-TRAC transfer casks of different weights are provided to house the MPCs. The 125 ton HI-TRAC weight does not exceed 125 tons during any loading or transfer operation. The 100 ton HI-TRAC weight does not exceed 100 tons during any loading or transfer operation. The internal cylindrical cavities of the two standard design HI-TRACs are identical. However, the external dimensions are different. The 100ton HI-TRAC has a reduced thickness of lead and water shielding and consequently, the external dimensions are different. The structural steel thickness is identical in the two HI-TRACs. This allows most structural analyses of the 125 ton HI-TRAC to bound the 100 ton HI-TRAC design. Additionally, as the two HI-TRACs are identical except for a reduced thickness of lead and water, the 125 ton HI-TRAC has a larger thermal resistance than the smaller and lighter 100 ton HI-TRAC. Therefore, for normal conditions the 125 ton HI-TRAC thermal analysis bounds that of the 100 ton HI-TRAC. Separate shielding analyses are performed for each HI-TRAC since the shielding thicknesses are different between the two.

1.2.1.2.3 HI-TRAC 125D Transfer Cask

As an option to using either of the standard HI-TRAC transfer cask design, users may choose to use the optional HI-TRAC 125D design. Figure 1.2.9A provides a typical cross section of the standard design HI-TRAC-125 with the pool lid installed. Like the standard design, the HI-TRAC 125D is designed and constructed in accordance with ASME III, Subsection NF, with certain NRC-approved alternatives, as discussed in Section 2.2.4. Functionally equivalent, the major differences between the HI-TRAC 125D design and the standard design are as follows:

- No pocket trunnions are provided for downending/upending
- The transfer lid is not required
- A new ancillary, the HI-STORM mating device (Figure 1.2.18) is required during MPC transfer operations
- A wider baseplate with attachment points for the mating device is provided
- The baseplate incorporates gussets for added structural strength
- The number of pool lid bolts is reduced

The interface between the MPC and the transfer cask is the same between the standard design and the HI-TRAC 125D design. The optional design is capable of withstanding all loads defined

in the design basis for the transfer cask during normal, off-normal, and accident modes of operation with adequate safety margins. In lieu of swapping the pool lid for the transfer lid to facilitate MPC transfer, the pool lid remains on the HI-TRAC 125D until MPC transfer is required. The HI-STORM mating device is located between, and secured with bolting to, the top of the HI-STORM overpack and the HI-TRAC 125D transfer cask. The mating device is used to remove the pool lid to provide a pathway for MPC transfer between the overpack and the transfer cask. Section 1.2.2.2 provides additional detail on the differences between the standard transfer cask design and the HI-TRAC 125D design during operations.

1.2.1.3 Shielding Materials

The HI-STORM 100 System is provided with shielding to ensure the radiation and exposure requirements in 10CFR72.104 and 10CFR72.106 are met. This shielding is an important factor in minimizing the personnel doses from the gamma and neutron sources in the SNF in the MPC for ALARA considerations during loading, handling, transfer, and storage. The fuel basket structure of edge-welded composite boxes and ~~Boral®~~ neutron ~~poison~~ *absorber* panels attached to the fuel storage cell vertical surfaces provide the initial attenuation of gamma and neutron radiation emitted by the radioactive spent fuel. The MPC shell, baseplate, lid and closure ring provide additional thicknesses of steel to further reduce the gamma flux at the outer canister surfaces.

In the HI-STORM storage overpack, the primary shielding in the radial direction is provided by concrete and steel. In addition, the storage overpack has a thick circular concrete slab attached to the lid, and a thick circular concrete pedestal upon which the MPC rests. These slabs provide gamma and neutron attenuation in the axial direction. The thick overpack lid and concrete shielding integral to the lid provide additional gamma attenuation in the upward direction, reducing both direct radiation and skyshine. Several steel plate and shell elements provide additional gamma shielding as needed in specific areas, as well as incremental improvements in the overall shielding effectiveness. Gamma shield cross plates, as depicted in Figure 5.3.19, provide attenuation of scattered gamma radiation as it exits the inlet and outlet air ducts.

In the HI-TRAC transfer cask radial direction, gamma and neutron shielding consists of steel-lead-steel and water, respectively. In the axial direction, shielding is provided by the top lid, and the pool or transfer lid, as applicable. In the HI-TRAC pool lid, layers of steel-lead-steel provide an additional measure of gamma shielding to supplement the gamma shielding at the bottom of the MPC. In the transfer lid, layers of steel-lead-steel provide gamma attenuation. For the HI-TRAC 125 transfer lid, the neutron shield material, Holtite-A, is also provided. The HI-TRAC 125 and HI-TRAC 125D top lids are composed of steel-neutron shield-steel, with the neutron shield material being Holtite-A. The HI-TRAC 100 top lid is composed of steel only providing gamma attenuation.

1.2.1.3.1 ~~Boral~~ *Fixed* Neutron Absorbers

1.2.1.3.1.1 Boral™

Boral is a thermal neutron poison material composed of boron carbide and aluminum (aluminum powder and plate). Boron carbide is a compound having a high boron content in a physically stable and chemically inert form. The boron carbide contained in Boral is a fine granulated powder that conforms to ASTM C-750-80 nuclear grade Type III. The Boral cladding is made of alloy aluminum, a lightweight metal with high tensile strength which is protected from corrosion by a highly resistant oxide film. The two materials, boron carbide and aluminum, are chemically compatible and ideally suited for long-term use in the radiation, thermal, and chemical environment of a nuclear reactor, spent fuel pool, or dry cask. See Section 3.4.1 for discussion of the reaction of Boral with spent fuel pool water during fuel loading and unloading operations.

The documented historical applications of Boral, in environments comparable to those in spent fuel pools and fuel storage casks, dates to the early 1950s (the U.S. Atomic Energy Commission's AE-6 Water-Boiler Reactor [1.2.2]). Technical data on the material was first printed in 1949, when the report "Boral: A New Thermal Neutron Shield" was published [1.2.3]. In 1956, the first edition of the Reactor Shielding Design Manual [1.2.4] was published and it contained a section on Boral and its properties.

In the research and test reactors built during the 1950s and 1960s, Boral was frequently the material of choice for control blades, thermal-column shutters, and other items requiring very good thermal-neutron absorption properties. It is in these reactors that Boral has seen its longest service in environments comparable to today's applications.

Boral found other uses in the 1960s, one of which was a neutron poison material in baskets used in the shipment of irradiated, enriched fuel rods from Canada's Chalk River laboratories to Savannah River. Use of Boral in shipping containers continues, with Boral serving as the poison in current British Nuclear Fuels Limited casks and the Storable Transport Cask by Nuclear Assurance Corporation [1.2.5].

Boral has been licensed by the NRC for use in numerous BWR and PWR spent fuel storage racks and has been extensively used in international nuclear installations.

Boral has been exclusively used in fuel storage applications in recent years. Its use in spent fuel pools as the neutron absorbing material can be attributed to its proven performance and several unique characteristics, such as:

- The content and placement of boron carbide provides a very high removal cross section for thermal neutrons.

- Boron carbide, in the form of fine particles, is homogeneously dispersed throughout the central layer of the Boral panels.

- The boron carbide and aluminum materials in Boral do not degrade as a result of long-term exposure to radiation.

- The neutron absorbing central layer of Boral is clad with permanently bonded surfaces of aluminum.

- Boral is stable, strong, durable, and corrosion resistant.

Boral absorbs thermal neutrons without physical change or degradation of any sort from the anticipated exposure to gamma radiation and heat. The material does not suffer loss of neutron attenuation capability when exposed to high levels of radiation dose.

Holtec International's QA Program ensures that Boral is manufactured under the control and surveillance of a Quality Assurance/Quality Control Program that conforms to the requirements of 10CFR72, Subpart G. Holtec International has procured over 200,000 panels of Boral from AAR Advanced Structures in over 30 projects. Boral has always been purchased with a minimum ^{10}B loading requirement. Coupons extracted from production runs were tested using the wet chemistry procedure. The actual ^{10}B loading, out of thousands of coupons tested, has never been found to fall below the design specification. The size of this coupon database is sufficient to provide reasonable assurance that all future Boral procurements will continue to yield Boral with full compliance with the stipulated minimum loading. Furthermore, the surveillance, coupon testing, and material tracking processes which have so effectively controlled the quality of Boral are expected to continue to yield Boral of similar quality in the future. Nevertheless, to add another layer of insurance, only 75% ^{10}B credit of the fixed neutron absorber is assumed in the criticality analysis consistent with Chapter 6.0, IV, 4.c of NUREG-1536, Standard Review Plan for Dry Cask Storage Systems.

The oxide layer that is created from the reaction of the outer aluminum cladding and the edges of the Boral panels with air and water provides a barrier to further reaction of the aluminum cladding with air or the spent fuel pool water during loading and unloading operations. However, with extended submergence in an MPC filled with water or in the plant's spent fuel pool, the hydrodynamic pressure can drive water into the Boral core (comprised of particulate B_4C and aluminum powder) where previously unexposed aluminum powder may react with the water to create hydrogen. The rate of hydrogen generation and the total hydrogen generated is dependent on several variables:

- *<u>Aluminum particle size:</u> Aluminum particle size in the Boral core and associated porosity affects the amount of aluminum available for reaction with water. Larger aluminum particles yield less surface area for reaction, but higher porosity for aluminum-water interaction; smaller aluminum particles yield more surface area for reaction, but lower porosity for aluminum-water reaction.*

- *Presence of trace impurities: The presence of trace impurities in the Boral core due to the manufacturing process (i.e., sodium hydroxide, boron oxide, and iron-oxide) can affect the rate of hydrogen production, both increasing and suppressing the reaction. Sodium dissolved in the water increases the pH and tends to increase the rate of hydrogen production. This is counteracted by the boron oxide, which hydrolyzes to boric acid (H_3BO_3) and reduces the rate of hydrogen production. Trace impurities do not affect the total amount of hydrogen generated.*

- *Pool water chemistry: Chemicals in the plant spent fuel pool water (e.g., copper, boron) can affect the rate of hydrogen production, both increasing (copper) and suppressing (boron) the reaction.*

- *MPC loading operations: Operating needs or preferences by individual utilities as to when, and for how long the MPC is kept at varying water depths in the spent fuel pool, and how long the MPC is kept filled with water outside the spent fuel pool can affect the amount of aluminum in the Boral core that may be exposed to water.*

Due to the variability in hydrogen generation from the Boral-water reaction, the operating procedures in Chapter 8 require monitoring for combustible gases and either exhausting or purging the space beneath the MPC lid during loading and unloading operations when an ignition event could occur (i.e., when the space beneath the MPC lid is open to the welding or cutting operation).

1.2.1.3.1.2 METAMIC®

METAMIC® is a neutron absorber material developed by the Reynolds Aluminum Company in the mid-1990s for spent fuel reactivity control in dry and wet storage applications. Metallurgically, METAMIC® is a metal matrix composite (MMC) consisting of a matrix of 6061 aluminum alloy reinforced with Type 1 ASTM C-750 boron carbide. METAMIC® is characterized by extremely fine aluminum (325 mesh or better) and boron carbide powder. Typically, the average B_4C particle size is between 10 and 15 microns. As described in the U.S. patents held by METAMIC, Inc.[*,†], *the high performance and reliability of METAMIC® derives from the particle size distribution of its constituents, rendered into a metal matrix composite by the powder metallurgy process. This yields excellent and uniform homogeneity.*

The powders are carefully blended without binders or other additives that could potentially adversely influence performance. The maximum percentage of B_4C that can be dispersed in the aluminum alloy 6061 matrix is approximately 40 wt.%, although extensive manufacturing and testing experience is limited to approximately 31 wt.%. The blend of powders is isostatically compacted into a green billet under high pressure and vacuum sintered to near theoretical density. According to the manufacturer, billets of any size can be produced using this technology. The billet is subsequently extruded into one of a number of product forms, ranging from sheet and plate to

---

[*] *U.S. Patent No. 5,965,829, "Radiation Absorbing Refractory Composition".*

[†] *U.S. Patent No. 6,042,779, "Extrusion Fabrication Process for Discontinuous Carbide Particulate Metal Matrix Composites and Super, Hypereutectic Al/Si."*

angle, channel, round and square tube, and other profiles. For the METAMIC® sheets used in the MPCs, the extruded form is rolled down into the required thickness.

METAMIC® has been subjected to an extensive array of tests sponsored by the Electric Power Research Institute (EPRI) that evaluated the functional performance of the material at elevated temperatures (up to 900°F) and radiation levels (1E+11 rads gamma). The results of the tests documented in an EPRI report (Ref. [1.2.11]) indicate that METAMIC® maintains its physical and neutron absorption properties with little variation in its properties from the unirradiated state. The main conclusions provided in the above-referenced EPRI report are summarized below:

- *The metal matrix configuration produced by the powder metallurgy process with a complete absence of open porosity in METAMIC® ensures that its density is essentially equal to the theoretical density.*
- *The physical and neutronic properties of METAMIC® are essentially unaltered under exposure to elevated temperatures (750° F - 900° F).*
- *No detectable change in the neutron attenuation characteristics under accelerated corrosion test conditions has been observed.*

In addition, independent measurements of boron carbide particle distribution show extremely small particle-to-particle distance† and near-perfect homogeneity.

An evaluation of the manufacturing technology underlying METAMIC® as disclosed in the above-referenced patents and of the extensive third-party tests carried out under the auspices of EPRI makes METAMIC® an acceptable neutron absorber material for use in the MPCs. Holtec's technical position on METAMIC® is also supported by the evaluation carried out by other organizations (see, for example, USNRC's SER on NUHOMS-61BT, Docket No. 72-1004).

Consistent with its role in reactivity control, all METAMIC® material procured for use in the Holtec MPCs will be qualified as important-to-safety (ITS) Category A item. ITS category A manufactured items, as required by Holtec's NRC-approved Quality Assurance program, must be produced to essentially preclude the potential of an error in the procurement of constituent materials and the manufacturing processes. Accordingly, material and manufacturing control processes must be established to eliminate the incidence of errors, and inspection steps must be implemented to serve as an independent set of barriers to ensure that all critical characteristics defined for the material by the cask designer are met in the manufactured product.

All manufacturing and in-process steps in the production of METAMIC® shall be carried out using written procedures. As required by the company's quality program, the material manufacturer's QA

† Medium measured neighbor-to-neighbor distance is 10.08 microns according to the article, "METAMIC Neutron Shielding", by K. Anderson, T. Haynes, and R. Kazmier, EPRI Boraflex Conference, November 19-20, 1998.

program and its implementation shall be subject to review and ongoing assessment, including audits and surveillances as set forth in the applicable Holtec QA procedures to ensure that all METAMIC® panels procured meet with the requirements appropriate for the quality genre of the MPCs. Additional details pertaining to the qualification and production tests for METAMIC® are summarized in Subsection 9.1.5.3.

Because of the absence of interconnected porosities, the time required to dehydrate a METAMIC®-equipped MPC is expected to be less compared to an MPC containing Boral.

NUREG/CR-5661 recommends limiting poison material credit to 75% of the minimum ^{10}B loading because of concerns for potential "streaming" of neutrons, and allows for greater percentage credit in criticality analysis "if comprehensive acceptance tests, capable of verifying the presence and uniformity of the neutron absorber, are implemented". The value of 75% is characterized in NUREG/CR-5661 as a very conservative value, based on experiments with neutron poison containing relatively large B_4C particles, such as BORAL with an average particle size in excess of 100 microns. METAMIC®, however, has a much smaller particle size of typically between 10 and 15 microns on average. Any streaming concerns would therefore be drastically reduced.

Analyses performed by Holtec International show that the streaming due to particle size is practically non-existent in METAMIC®. Further, EPRI's neutron attenuation measurements on 31 and 15 B_4C weight percent METAMIC® showed that METAMIC® exhibits very uniform ^{10}B areal density. This makes it easy to reliably establish and verify the presence and microscopic and macroscopic uniformity of the ^{10}B in the material. Therefore, 90% credit is applied to the minimum ^{10}B areal density in the criticality calculations, i.e. a 10% penalty is applied. This 10% penalty is considered conservative since there are no significant remaining uncertainties in the ^{10}B areal density. In Chapter 9 the qualification and on production tests for METAMIC® to support 90% ^{10}B credit are specified. With 90% credit, the target weight percent of boron carbide in METAMIC® is 31 for all MPCs, as summarized in Table 1.2.8, consistent with the test coupons used in the EPRI evaluations[1.2.11]. The maximum permitted value is 32.5 wt% to allow for necessary fabrication flexibility.

Because METAMIC® is a solid material, there is no capillary path through which spent fuel pool water can penetrate METAMIC® panels and chemically react with aluminum in the interior of the material to generate hydrogen. Any chemical reaction of the outer surfaces of the METAMIC® neutron absorber panels with water to produce hydrogen occurs rapidly and reduces to an insignificant amount in a short period of time. Nevertheless, combustible gas monitoring for METAMIC® -equipped MPCs and purging or exhausting the space under the MPC lid during welding and cutting operations, is required until sufficient field experience is gained that confirms that little or no hydrogen is released by METAMIC® during these operations..

Mechanical properties of 31 wt.% METAMIC® based on coupon tests of the material in the as-fabricated condition and after 48 hours of an elevated temperature state at 900°F are summarized below from the EPRI report [1.2.11].

Mechanical Properties of 31wt.% B_4C METAMIC		
Property	*As-Fabricated*	*After 48 hours of 900°F Temperature Soak*
Yield Strength (psi)	*32937 ± 3132*	*28744 ± 3246*
Ultimate Strength (psi)	*40141 ± 1860*	*34608 ± 1513*
Elongation (%)	*1.8 ± 0.8*	*5.7 ± 3.1*

The required flexural strain of the neutron absorber to ensure that it will not fracture when the supporting basket wall flexes due to the worst case lateral inertial loading, has been set at 0.2% for the MPCs. The 1% minimum elongation of 31wt.% B_4C METAMIC® indicated by the above table means that METAMIC® will have a minimum factor of safety of five against cracking under the most severe postulated mechanical accident conditions for the MPCs.

EPRI's extensive characterization effort [1.2.11], which was focused on 15 and 31 wt.% B_4C METAMIC® served as the principal basis for a recent USNRC SER for 31wt.% B_4C METAMIC for used in wet storage [1.2.12]. Additional studies on METAMIC® [1.2.13], EPRI's and others work [1.2.14] provide the confidence that 31wt.% B_4C METAMIC® will perform its intended function in the MPCs.

1.2.1.3.1.3 Locational Fixity of Neutron Absorbers

Both Boral and METAMIC® neutron absorber panels are completely enclosed in Alloy X (stainless steel) sheathing that is stitch welded to the MPC basket cell walls along their entire periphery. The edges of the sheathing are bent toward the cell wall to make the edge weld. Thus, the neutron absorber is contained in a tight, welded pocket enclosure. The shear strength of the pocket weld joint, which is an order of magnitude greater than the weight of a fuel assembly, guarantees that the neutron absorber and its enveloping sheathing pocket will maintain their as-installed position under all loading, storage, and transient evolutions. Finally, the pocket joint detail ensures that fuel assembly insertion or withdrawal into or out of the MPC basket will not lead to a disconnection of the sheathing from the cell wall.

1.2.1.3.2 Neutron Shielding

The specification of the HI-STORM overpack and HI-TRAC transfer cask neutron shield material is predicated on functional performance criteria. These criteria are:

- Attenuation of neutron radiation to appropriate levels;
- Durability of the shielding material under normal conditions, in terms of thermal, chemical, mechanical, and radiation environments;
- Stability of the homogeneous nature of the shielding material matrix;

- Stability of the shielding material in mechanical or thermal accident conditions to the desired performance levels; and

- Predictability of the manufacturing process under adequate procedural control to yield an in-place neutron shield of desired function and uniformity.

Other aspects of a shielding material, such as ease of handling and prior nuclear industry use, are also considered, within the limitations of the main criteria. Final specification of a shield material is a result of optimizing the material properties with respect to the main criteria, along with the design of the shield system, to achieve the desired shielding results.

Neutron attenuation in the HI-STORM overpack is provided by the thick walls of concrete contained in the steel vessel, lid, and pedestal. Concrete is a shielding material with a long proven history in the nuclear industry. The concrete composition has been specified to ensure its continued integrity at the long term temperatures required for SNF storage.

The HI-TRAC transfer cask is equipped with a water jacket providing radial neutron shielding. Demineralized water will be utilized in the water jacket. To ensure operability for low temperature conditions, ethylene glycol (25% in solution) will be added to reduce the freezing point for low temperature operations (e.g., below 32°F) [1.2.7].

Neutron shielding in the HI-TRAC 125 and 125D transfer casks in the axial direction is provided by Holtite-A within the top lid. HI-TRAC 125 also contains Holtite-A in the transfer lid. Holtite-A is a poured-in-place solid borated synthetic neutron-absorbing polymer. Holtite-A is specified with a nominal B_4C loading of 1 weight percent for the HI-STORM 100 System. Appendix 1.B provides the Holtite-A material properties germane to its function as a neutron shield. Holtec has performed confirmatory qualification tests on Holtite-A under the company's QA program.

In the following, a brief summary of the performance characteristics and properties of Holtite-A is provided.

Density

The specific gravity of Holtite-A is 1.68 g/cm^3 as specified in Appendix 1.B. To conservatively bound any potential weight loss at the design temperature and any inability to reach the theoretical density, the density is reduced by 4% to 1.61 g/cm^3. The density used for the shielding analysis is conservatively assumed to be 1.61 g/cm^3 to underestimate the shielding capabilities of the neutron shield.

Hydrogen

The weight concentration of hydrogen is 6.0%. However, all shielding analyses conservatively assume 5.9% hydrogen by weight in the calculations.

Boron Carbide

Boron carbide dispersed within Holtite-A in finely dispersed powder form is present in 1% (nominal) weight concentration. Holtite-A may be specified with a B_4C content of up to 6.5 weight percent. For the HI-STORM 100 System, Holtite-A is specified with a nominal B_4C weight percent of 1%.

Design Temperature

The design temperatures of Holtite-A *are provided in Table 1.B.1.*~~is set at 300°F.~~ The maximum spatial temperatures of Holtite-A under all normal operating conditions must be demonstrated to be below the*se*~~is~~ design temperatures*, as applicable.*

Thermal Conductivity

The Holtite-A neutron shielding material is stable below the design temperature for the long term and provides excellent shielding properties for neutrons. A conservative, lower bound conductivity is stipulated for use in the thermal analyses of Chapter 4 (Section 4.2) based on information in the technical literature.

1.2.1.3.3 Gamma Shielding Material

For gamma shielding, the HI-STORM 100 storage overpack primarily relies on massive concrete sections contained in a robust steel vessel. A carbon steel plate, the shield shell, is located adjacent to the overpack inner shell to provide additional gamma shielding (Figure 1.2.7)[†]. Carbon steel supplements the concrete gamma shielding in most portions of the storage overpack, most notably the baseplate and the lid. To reduce the radiation streaming through the overpack air inlets and outlets, gamma shield cross plates are installed in the ducts (Figures 1.2.8 and 1.2.8A) to scatter the radiation. This scattering acts to significantly reduce the local dose rates adjacent to the overpack air inlets and outlets.

In the HI-TRAC transfer cask, the primary gamma shielding is provided by lead. As in the storage overpack, carbon steel supplements the lead gamma shielding of the HI-TRAC transfer cask.

[†] The shield shell design feature was deleted in June, 2001 after overpack serial number 7 was fabricated. Those overpacks without the shield shell are required to have a higher concrete density in the overpack body to provide compensatory shielding. See Table 1.D.1.

1.2.1.4 Lifting Devices

Lifting of the HI-STORM 100 System may be accomplished either by attachment at the top of the storage overpack ("top lift"), as would typically be done with a crane, or by attachment at the bottom ("bottom lift"), as would be effected by a number of lifting/handling devices.

For a top lift, the storage overpack is equipped with four threaded anchor blocks arranged circumferentially around the overpack. These anchor blocks are used for overpack lifting as well as securing the overpack lid to the overpack body. The anchor blocks are integrally welded to the overpack radial plates which in turn are full-length welded to the overpack inner shell, outer shell, and baseplate (HI-STORM100) or inlet air duct horizontal plates (HI-STORM 100S). The storage overpack may be lifted with a lifting device that engages the anchor blocks with threaded studs and connects to a crane or similar equipment.

A bottom lift of the HI-STORM 100 storage overpack is effected by the insertion of four hydraulic jacks underneath the inlet vent horizontal plates (Figure 1.2.1). A slot in the overpack baseplate allows the hydraulic jacks to be placed underneath the inlet vent horizontal plate. The hydraulic jacks lift the loaded overpack to provide clearance for inserting or removing a device for transportation.

The standard design HI-TRAC transfer cask is equipped with two lifting trunnions and two pocket trunnions. The HI-TRAC 125D is equipped with only lifting trunnions. The lifting trunnions are positioned just below the top forging. The two pocket trunnions are located above the bottom forging and attached to the outer shell. The pocket trunnions are designed to allow rotation of the HI-TRAC. All trunnions are built from a high strength alloy with proven corrosion and non-galling characteristics. The lifting trunnions are designed in accordance with NUREG-0612 and ANSI N14.6. The lifting trunnions are installed by threading into tapped holes just below the top forging.

The top of the MPC lid is equipped with four threaded holes that allow lifting of the loaded MPC. These holes allow the loaded MPC to be raised/lowered through the HI-TRAC transfer cask using lifting cleats. The threaded holes in the MPC lid are designed in accordance with NUREG-0612 and ANSI N14.6.

1.2.1.5 Design Life

The design life of the HI-STORM 100 System is 40 years. This is accomplished by using material of construction with a long proven history in the nuclear industry and specifying materials known to withstand their operating environments with little to no degradation. A maintenance program, as specified in Chapter 9, is also implemented to ensure the HI-STORM 100 System will exceed its design life of 40 years. The design considerations that assure the HI-STORM 100 System performs as designed throughout the service life include the following:

HI-STORM Overpack and HI-TRAC Transfer Cask

- Exposure to Environmental Effects
- Material Degradation
- Maintenance and Inspection Provisions

MPC

- Corrosion
- Structural Fatigue Effects
- Maintenance of Helium Atmosphere
- Allowable Fuel Cladding Temperatures
- Neutron Absorber Boron Depletion

The adequacy of the HI-STORM 100 System for its design life is discussed in Sections 3.4.11 and 3.4.12.

1.2.2 Operational Characteristics

1.2.2.1 Design Features

The HI-STORM 100 System incorporates some unique design improvements. These design innovations have been developed to facilitate the safe long term storage of SNF. Some of the design originality is discussed in Subsection 1.2.1 and below.

The free volume of the MPCs is inerted with 99.995% pure helium gas during the spent nuclear fuel loading operations. Table 1.2.2 specifies the helium fill requirements for the MPC internal cavity.

The HI-STORM overpack has been designed to synergistically combine the benefits of steel and concrete. The steel-concrete-steel construction of the HI-STORM overpack provides ease of fabrication, increased strength, and an optimal radiation shielding arrangement. The concrete is primarily provided for radiation shielding and the steel is primarily provided for structural functions.

The strength of concrete in tension and shear is conservatively neglected. Only the compressive strength of the concrete is accounted for in the analyses.

The criticality control features of the HI-STORM 100 are designed to maintain the neutron multiplication factor k-effective (including uncertainties and calculational bias) at less than 0.95 under all normal, off-normal, and accident conditions of storage as analyzed in Chapter 6. This level of conservatism and safety margins is maintained, while providing the highest storage capacity.

1.2.2.2 Sequence of Operations

Table 1.2.6 provides the basic sequence of operations necessary to defuel a spent fuel pool using the HI-STORM 100 System. The detailed sequence of steps for storage-related loading and handling operations is provided in Chapter 8 and is supported by the ~~Design~~ ~~D~~*d*rawings in Section 1.5. A summary of the general actions needed for the loading and unloading operations is provided below. Figures 1.2.16 and 1.2.17 provide a pictorial view of typical loading and unloading operations, respectively.

Loading Operations

At the start of loading operations, the HI-TRAC transfer cask is configured with the pool lid installed. The HI-TRAC water jacket is filled with demineralized water or a 25% ethylene glycol solution depending on the ambient temperature conditions. The lift yoke is used to position HI-TRAC in the designated preparation area or setdown area for HI-TRAC inspection and MPC insertion. The annulus is filled with plant demineralized water (borated if necessary), and an inflatable annulus seal is installed. The inflatable seal prevents contact between spent fuel pool water and the MPC shell reducing the possibility of contaminating the outer surfaces of the MPC. The MPC is then filled with water. Based on the MPC model and fuel enrichment, ~~(as required by the CoC),~~ this may be borated water or plant demineralized water *(see Section 2.1)*. HI-TRAC and the MPC are lowered into the spent fuel pool for fuel loading using the lift yoke. Pre-selected assemblies are loaded into the MPC and a visual verification of the assembly identification is performed.

While still underwater, a thick shielding lid (the MPC lid) is installed. The lift yoke is remotely engaged to the HI-TRAC lifting trunnions and is used to lift the HI-TRAC close to the spent fuel pool surface. As an ALARA measure, dose rates are measured on the top of the HI-TRAC and MPC prior to removal from the pool to check for activated debris on the top surface. The MPC lift bolts (securing the MPC lid to the lift yoke) are removed. As HI-TRAC is removed from the spent fuel pool, the lift yoke and HI-TRAC are sprayed with demineralized water to help remove contamination.

HI-TRAC is removed from the pool and placed in the designated preparation area. The top surfaces of the MPC lid and the upper flange of HI-TRAC are decontaminated. The inflatable annulus seal is removed, and an annulus shield is installed. The annulus shield provides additional personnel shielding at the top of the annulus and also prevents small items from being dropped into the annulus. ~~Dose rates are measured at the MPC lid and around the mid-height circumference of HI-TRAC to ensure that the dose rates are within expected values.~~ The Automated Welding System baseplate shield (if used) is installed to reduce dose rates around the top of the cask. The MPC water level is lowered slightly and the MPC lid is seal-welded using the Automated Welding System (AWS) or other approved welding process. Liquid penetrant examinations are performed on the root and final passes. A multi-layer liquid penetrant or volumetric examination is also performed on the MPC lid-to-shell weld. ~~The water level is raised~~

~~to the top of the MPC and the weld is hydrostatically tested. Then a small volume of the water is displaced with helium gas. The helium gas is used for leakage testing. A helium leakage rate test is performed on the MPC lid confinement weld (lid-to-shell) to verify weld integrity and to ensure that leakage rates are within acceptance criteria.~~ The MPC water is displaced from the MPC by blowing pressurized helium or nitrogen gas into the vent port of the MPC, thus displacing the water through the drain line. *At the appropriate time in the sequence of activities, based on the type of test performed (hydrostatic or pneumatic), a pressure test of the MPC enclosure vessel is performed.*

For ~~storage of moderate burnup fuel~~*lower heat load MPCs*, a Vacuum Drying System (VDS) may be used to remove moisture from the MPC cavity. The VDS is connected to the MPC and is used to remove liquid water from the MPC in a stepped evacuation process. The stepped evacuation process is used to preclude the formation of ice in the MPC and Vacuum Drying System lines. The internal pressure is reduced and held for a duration to ensure that all liquid water has evaporated. This process is continued until the pressure in the MPC meets the technical specification limit and can be held there for the required amount of time.

For storage of high burnup fuel, *higher heat load MPCs*, and, as an option for ~~storage of moderate burnup fuel~~*lower heat load MPCs*, the reduction of residual moisture in the MPC to trace amounts is accomplished using a Forced Helium Dehydration (FHD) system, as described in Appendix 2.B. Relatively warm and dry helium is recirculated through the MPC cavity, which helps maintain the SNF in a cooled condition while moisture is being removed. The warm, dry gas is supplied to the MPC drain port and circulated through the MPC cavity where it absorbs moisture. The humidified gas travels out of the MPC and through appropriate equipment to cool and remove the absorbed water from the gas. The dry gas may be heated prior to its return to the MPC in a closed loop system to accelerate the rate of moisture removal in the MPC. This process is continued until the temperature of the gas exiting the demoisturizing module described in Appendix 2.B meets the *specified* limit. ~~specified in the technical specifications~~. *FSAR Section 4.5 provides the specific limits applicable to the two types of moisture removal.*

Following moisture removal, ~~the VDS or FHD system is disconnected and the Helium Backfill System (HBS) is attached and~~ the MPC is backfilled with a predetermined amount of helium gas. The helium backfill ensures adequate heat transfer during storage~~,~~ *and* provides an inert atmosphere for long-term fuel integrity~~, and provides the means of future leakage rate testing of the MPC confinement boundary welds~~. Cover plates are installed and seal-welded over the MPC vent and drain ports with liquid penetrant examinations performed on the root and final passes. ~~The cover plates are helium leakage tested to confirm that they meet the established leakage rate criteria.~~

The MPC closure ring is then placed on the MPC, aligned, tacked in place, and seal welded, providing redundant closure of the MPC lid and cover plates confinement closure welds. Tack welds are visually examined, and the root and final welds are inspected using the liquid penetrant examination technique to ensure weld integrity. The annulus shield is removed and the remaining

water in the annulus is drained. The AWS Baseplate shield is removed. The MPC lid and accessible areas of the top of the MPC shell are smeared for removable contamination and HI-TRAC dose rates are measured. The HI-TRAC top lid is installed and the bolts are torqued. The MPC lift cleats are installed on the MPC lid. The MPC lift cleats are the primary lifting point of the MPC.

Rigging is installed between the MPC lift cleats and the lift yoke. The rigging supports the MPC within HI-TRAC while the pool lid is replaced with the transfer lid. For the standard design transfer cask, the HI-TRAC is manipulated to replace the pool lid with the transfer lid. The MPC lift cleats and rigging support the MPC during the transfer operations.

MPC transfer from the HI-TRAC transfer cask into the overpack may be performed inside or outside the fuel building. Similarly, HI-TRAC and HI-STORM may be transferred to the ISFSI in several different ways. The loaded HI-TRAC may be handled in the vertical or horizontal orientation. The loaded HI-STORM can only be handled vertically.

For MPC transfers inside the fuel building, the empty HI-STORM overpack is inspected and staged with the lid removed, the alignment device positioned, and, for the HI-STORM 100 overpack, the vent duct shield inserts installed. If using HI-TRAC 125D, the HI-STORM mating device is secured to the top of the empty overpack (Figure 1.2.18). The loaded HI-TRAC is placed using the fuel building crane on top of HI-STORM, or the mating device, as applicable. After the HI-TRAC is positioned atop the HI-STORM or secured to the mating device, as applicable, the MPC is raised slightly. With the standard HI-TRAC design, the transfer lid door locking pins are removed and the doors are opened. With the HI-TRAC 125D, the pool lid is removed using the mating device. The MPC is lowered into HI-STORM. Following verification that the MPC is fully lowered, slings are disconnected and lowered onto the MPC lid. For the HI-STORM 100, the doors are closed and the HI-TRAC is prepared for removal from on top of HI-STORM (with HI-TRAC 125D, the transfer cask must first be disconnected from the mating device). For the HI-STORM 100S, the standard design HI-TRAC may need to be lifted above the overpack to a height sufficient to allow closure of the transfer lid doors without interfering with the MPC lift cleats. The HI-TRAC is then removed and placed in its designated storage location. The MPC lift cleats and slings are removed from atop the MPC. The alignment device, vent duct shield inserts, and/or mating device is/are removed, as applicable. The pool lid is removed from the mating device and re-attached to the HI-TRAC 125D prior to its next use. The HI-STORM lid is installed, and the upper vent screens and gamma shield cross plates are installed. The HI-STORM lid studs are installed and torqued.

For MPC transfers outside of the fuel building, the empty HI-STORM overpack is inspected and staged with the lid removed, the alignment device positioned, and, for the HI-STORM 100, the vent duct shield inserts installed. For HI-TRAC 125D, the mating device is secured to the top of the overpack. The loaded HI-TRAC is transported to the cask transfer facility in the vertical or horizontal orientation. A number of methods may be utilized as long as the handling limitations prescribed in the technical specifications are not exceeded.

To place the loaded HI-TRAC in a horizontal orientation, a transport frame or "cradle" is utilized. If the cradle is equipped with rotation trunnions they are used to engage the HI-TRAC 100 or 125 pocket trunnions. While the loaded HI-TRAC is lifted by the lifting trunnions, the HI-TRAC is lowered onto the cradle rotation trunnions. Then, the crane lowers and the HI-TRAC pivots around the pocket trunnions and is placed in the horizontal position in the cradle.

The HI-TRAC 125D does not include pocket trunnions in its design. Therefore, the user must downend the transfer cask onto the transport frame using appropriately designed rigging in accordance with the site's heavy load control program.

If the loaded HI-TRAC is transferred to the cask transfer facility in the horizontal orientation, the HI-TRAC transport frame and/or cradle are placed on a transport vehicle. The transport vehicle may be an air pad, railcar, heavy-haul trailer, dolly, etc. If the loaded HI-TRAC is transferred to the cask transfer facility in the vertical orientation, the HI-TRAC may be lifted by the lifting trunnions or seated on the transport vehicle. During the transport of the loaded HI-TRAC, standard plant heavy load handling practices shall be applied including administrative controls for the travel path and tie-down mechanisms.

After the loaded HI-TRAC arrives at the cask transfer facility, the HI-TRAC is upended by a crane if the HI-TRAC is in a horizontal orientation. The loaded HI-TRAC is then placed, using the crane located in the transfer area, on top of HI-STORM, which has been inspected and staged with the lid removed, vent duct shield inserts installed, the alignment device positioned, and the mating device installed, as applicable.

After the HI-TRAC is positioned atop the HI-STORM or the mating device, the MPC is raised slightly. In the standard design, the transfer lid door locking pins are removed and the doors are opened. With the HI-TRAC 125D, the pool lid is removed using the mating device. The MPC is lowered into HI-STORM. Following verification that the MPC is fully lowered, slings are disconnected and lowered onto the MPC lid. For the HI-STORM 100, the doors are closed and HI-TRAC is removed from on top of HI-STORM or disconnected from the mating device, as applicable. For the HI-STORM 100S, the standard design HI-TRAC may need to be lifted above the overpack to a height sufficient to allow closure of the transfer lid doors without interfering with the MPC lift cleats. The HI-TRAC is then removed and placed in its designated storage location. The MPC lift cleats and slings are removed from atop the MPC. The alignment device, vent duct shield inserts, and mating device is/are removed, as applicable. The pool lid is removed from the mating device and re-attached to the HI-TRAC 125D prior to its next use. The HI-STORM lid is installed, and the upper vent screens and gamma shield cross plates are installed. The HI-STORM lid studs and nuts are installed..

After the HI-STORM has been loaded either within the fuel building or at a dedicated cask transfer facility, the HI-STORM is then moved to its designated position on the ISFSI pad. The HI-STORM overpack may be moved using a number of methods as long as the handling limitations listed in the technical specifications are not exceeded. The loaded HI-STORM must be handled in the vertical orientation, and may be lifted from the top by the anchor blocks or

from the bottom by the inlet vents. After the loaded HI-STORM is lifted, it may be placed on a transport mechanism or continue to be lifted by the lid studs and transported to the storage location. The transport mechanism may be an air pad, crawler, railcar, heavy-haul trailer, dolly, etc. During the transport of the loaded HI-STORM, standard plant heavy load handling practices shall be applied including administrative controls for the travel path and tie-down mechanisms. Once in position at the storage pad, vent operability testing is performed to ensure that the system is functioning within its design parameters.

In the case of HI-STORM 100A, the anchor studs are installed and fastened into the anchor receptacles in the ISFSI pad in accordance with the design requirements.

Unloading Operations

The HI-STORM 100 System unloading procedures describe the general actions necessary to prepare the MPC for unloading, cool the stored fuel assemblies in the MPC, flood the MPC cavity, remove the lid welds, unload the spent fuel assemblies, and recover HI-TRAC and empty the MPC. Special precautions are outlined to ensure personnel safety during the unloading operations, and to prevent the risk of MPC overpressurization and thermal shock to the stored spent fuel assemblies.

The MPC is recovered from HI-STORM either at the cask transfer facility or the fuel building using any of the methodologies described in Section 8.1. The HI-STORM lid is removed, the alignment device positioned, and, for the HI-STORM 100, the vent duct shield inserts are installed, and the MPC lift cleats are attached to the MPC. For HI-TRAC 125D, the mating device is installed. Rigging is attached to the MPC lift cleats. For the HI-STORM 100S and the standard HI-TRAC design, the transfer doors may need to be opened to avoid interfering with the MPC lift cleats. For HI-TRAC 125D, the mating device (possibly containing the pool lid) is secured to the top of the overpack. HI-TRAC is raised and positioned on top of HI-STORM or secured to the mating device, as applicable. For HI-TRAC 125D, the pool lid is ensured to be out of the transfer path for the MPC. The MPC is raised into HI-TRAC. Once the MPC is raised into HI-TRAC, the standard design HI-TRAC transfer lid doors are closed and the locking pins are installed. For HI-TRAC 125D, the pool lid is installed and the transfer cask is unsecured from the mating device. HI-TRAC is removed from on top of HI-STORM.

The HI-TRAC is brought into the fuel building and, for the standard design, manipulated for bottom lid replacement. The transfer lid is replaced with the pool lid. The MPC lift cleats and rigging support the MPC during lid transfer operations.

HI-TRAC and its enclosed MPC are returned to the designated preparation area and the rigging, MPC lift cleats, and HI-TRAC top lid are removed. The annulus is filled with plant demineralized water(borated, if necessary). The annulus and HI-TRAC top surfaces are protected from debris that will be produced when removing the MPC lid.

The MPC closure ring and vent and drain port cover plates are core drilled. Local ventilation is established around the MPC ports. The RVOAs are attached to the vent and drain port. The RVOAs allow access to the inner cavity of the MPC, while providing a hermetic seal. The MPC is cooled using ~~a closed-loop heat exchanger to~~ *appropriate means, if necessary, to* reduce the MPC internal temperature to allow water flooding. Following the fuel cool-down, the MPC is flooded with borated or unborated water, *as required.* ~~in accordance with the CoC.~~ The MPC lid-to-MPC shell weld is removed. Then, all weld removal equipment is removed with the MPC lid left in place.

The MPC lid is rigged to the lift yoke and the lift yoke is engaged to HI-TRAC lifting trunnions. If weight limitations require, the neutron shield jacket is drained. HI-TRAC is placed in the spent fuel pool and the MPC lid is removed. All fuel assemblies are returned to the spent fuel storage racks and the MPC fuel cells are vacuumed to remove any assembly debris. HI-TRAC and MPC are returned to the designated preparation area where the MPC water is removed. The annulus water is drained and the MPC and HI-TRAC are decontaminated in preparation for re-utilization.

1.2.2.3 Identification of Subjects for Safety and Reliability Analysis

1.2.2.3.1 Criticality Prevention

Criticality is controlled by geometry and neutron absorbing materials in the fuel basket. The MPC-24*/24E/24EF*~~, MPC-24E, and 24EF~~ (all with lower enriched fuel) and the MPC-68*/68F/68FF* do not rely on soluble boron credit during loading or the assurance that water cannot enter the MPC during storage to meet the stipulated criticality limits.

Each MPC model is equipped with ~~Boral~~ neutron absorber plates affixed to the fuel cell walls as shown on the ~~design~~ drawings *in Section 1.5*. The minimum ^{10}B areal density specified for the ~~Boral~~ *neutron absorber* in each MPC model is shown in Table 1.2.2. These values are chosen to be consistent with the assumptions made in the criticality analyses.

The MPC-24, MPC-24E and 24EF(all with higher enriched fuel) and the MPC-32 *and MPC-32F* take credit for soluble boron in the MPC water for criticality prevention during wet loading and unloading operations. Boron credit is only necessary for these PWR MPCs during loading and unloading operations that take place under water. During storage, with the MPC cavity dry and sealed from the environment, criticality control measures beyond the fixed neutron poisons affixed to the storage cell walls are not necessary because of the low reactivity of the fuel in the dry, helium filled canister and the design features that prevent water from intruding into the canister during storage.

1.2.2.3.2 Chemical Safety

There are no chemical safety hazards associated with operations of the HI-STORM 100 dry storage system. A detailed evaluation is provided in Section 3.4.

1.2.2.3.3 Operation Shutdown Modes

The HI-STORM 100 System is totally passive and consequently, operation shutdown modes are unnecessary. Guidance is provided in Chapter 8, which outlines the HI-STORM 100 unloading procedures, and Chapter 11, which outlines the corrective course of action in the wake of postulated accidents.

1.2.2.3.4 Instrumentation

As stated earlier, the HI-STORM 100 confinement boundary is the MPC, which is seal welded, *non-destructively examined* and ~~leak~~*pressure* tested. The HI-STORM 100 is a completely passive system with appropriate margins of safety; therefore, it is not necessary to deploy any instrumentation to monitor the cask in the storage mode. At the option of the user, temperature elements may be utilized to monitor the air temperature of the HI-STORM overpack exit vents in lieu of routinely inspecting the ducts for blockage. See Subsection 2.3.3.2 ~~and the Technical Specifications in Appendix A to the CoC~~ for additional details.

1.2.2.3.5 Maintenance Technique

Because of their passive nature, the HI-STORM 100 System requires minimal maintenance over its lifetime. No special maintenance program is required. Chapter 9 describes the acceptance criteria and maintenance program set forth for the HI-STORM 100.

1.2.3 Cask Contents

The HI-STORM 100 System is designed to house different types of MPCs. The MPCs are designed to store both BWR and PWR spent nuclear fuel assemblies. Tables 1.2.1 and 1.2.2 provide key *system data and* ~~design~~ parameters for the MPCs. A description of acceptable fuel assemblies for storage in the MPCs is provided in Section 2.1. ~~and the Approved Contents section of Appendix B to the CoC.~~ This includes fuel assemblies classified as damaged fuel assemblies and fuel debris in accordance with the definitions of these terms in ~~the CoC~~*Table 1.0.1*. A summary of the types of fuel authorized for storage in each MPC model is provided below. All fuel assemblies, *non-fuel hardware, and neutron sources* must meet the fuel specifications provided in ~~Appendix B to the CoC~~*Section 2.1*. All fuel assemblies classified as damaged fuel or fuel debris must be stored in damaged fuel containers.

MPC-24

The MPC-24 is designed to accommodate up to twenty-four (24) PWR fuel assemblies classified as intact fuel assemblies, with or without non-fuel hardware.

MPC-24E

The MPC-24E is designed to accommodate up to twenty-four (24) PWR fuel assemblies, with or without non-fuel hardware. Up to four (4) fuel assemblies may be classified as damaged fuel assemblies, with the balance being classified as intact fuel assemblies. Damaged fuel assemblies must be stored in fuel storage locations 3, 6, 19, and/or 22 (see Figure 1.2.4).

MPC-24EF

The MPC-24EF is designed to accommodate up to twenty-four (24) PWR fuel assemblies, with or without non-fuel hardware. Up to four (4) fuel assemblies may be classified as damaged fuel assemblies or fuel debris, with the balance being classified as intact fuel assemblies. Damaged fuel assemblies and fuel debris must be stored in fuel storage locations 3, 6, 19, and/or 22 (see Figure 1.2.4).

MPC-32

The MPC-32 is designed to accommodate up to thirty-two (32) PWR fuel assemblies ~~classified as intact fuel assemblies,~~ with or without non-fuel hardware. *Up to eight (8) of these assemblies may be classified as damaged fuel assemblies, with the balance being classified as intact fuel assemblies. Damaged fuel assemblies must be stored in fuel storage locations 1, 4, 5, 10, 23, 28, 29, and/or 32 (see Figure 1.2.3).*

MPC-32F

The MPC-32F is designed to store up to thirty two (32) PWR fuel assemblies with or without non-fuel hardware. Up to eight (8) of these assemblies may be classified as damaged fuel assemblies or fuel debris, with the balance being classified as intact fuel assemblies. Damaged fuel assemblies and fuel debris must be stored in fuel storage locations 1, 4, 5, 10, 23, 28, 29, and/or 32 (see Figure 1.2.3).

MPC-68

The MPC-68 is designed to accommodate up to sixty-eight (68) BWR intact and/or damaged fuel assemblies, with or without channels. For the Dresden Unit 1 or Humboldt Bay plants, the number of damaged fuel assemblies may be up to a total of 68. For damaged fuel assemblies from plants other than Dresden Unit 1 and Humboldt Bay, the number of damaged fuel assemblies is limited to sixteen (16) and must be stored in fuel storage locations 1, 2, 3, 8, 9, 16, 25, 34, 35, 44, 53, 60, 61, 66, 67, and/or 68 (see Figure 1.2.2).

MPC-68F

The MPC-68F is designed to accommodate up to sixty-eight (68) Dresden Unit 1 or Humboldt Bay BWR fuel assemblies (with or without channels) made up of any combination of fuel assemblies classified as intact fuel assemblies, damaged fuel assemblies, and up to four (4) fuel assemblies classified as fuel debris.

MPC-68FF

The MPC-68FF is designed to accommodate up to sixty-eight (68) BWR fuel assemblies with or without channels. Any number of these fuel assemblies may be Dresden Unit 1 or Humboldt Bay BWR fuel assemblies classified as intact fuel or damaged fuel. Dresden Unit 1 and Humboldt Bay fuel debris is limited to eight (8) DFCs. DFCs containing Dresden Unit 1 or Humboldt Bay fuel debris may be stored in any fuel storage location ~~F~~for BWR fuel assemblies from plants other than Dresden Unit 1 and Humboldt Bay, the total number of fuel assemblies classified as damaged fuel assemblies or fuel debris is limited to sixteen (16), with up to eight (8) of the 16 fuel assemblies classified as fuel debris. These fuel assemblies must be stored in fuel storage locations 1, 2, 3, 8, 9, 16, 25, 34, 35, 44, 53, 60, 61, 66, 67, and/or 68 (see Figure 1.2.2). The balance of the fuel storage locations may be filled with intact BWR fuel assemblies, up to a total of 68.

Table 1.2.1

KEY SYSTEM DATA FOR HI-STORM 100 SYSTEM

ITEM	QUANTITY	NOTES
Types of MPCs included in this revision of the submittal	~~7~~ *8*	4 *5* for PWR 3 for BWR
MPC storage capacity†:	MPC-24 MPC-24E MPC-24EF	Up to 24 intact ~~Zircaloy~~ *ZR* or stainless steel clad PWR fuel assemblies with or without non-fuel hardware. Up to four damaged fuel assemblies may be stored in the MPC-24E and up to four (4)damaged fuel assemblies and/or fuel assemblies classified as fuel debris may be stored in the MPC-24EF OR
	MPC-32 *MPC-32F*	Up to 32 intact ~~Zircaloy~~ *ZR* or stainless steel clad PWR fuel assemblies *with or without non-fuel hardware. Up to 8 damaged fuel assemblies may be stored in the MPC-32 and up to 8 damaged fuel assemblies and/or fuel assemblies classified as fuel debris may be stored in the MPC-32F.*
	MPC-68	Any combination of Dresden Unit 1 or Humboldt Bay damaged fuel assemblies in damaged fuel containers and intact fuel assemblies, up to a total of 68. For damaged fuel other than Dresden Unit 1 and Humboldt Bay, the number of fuel assemblies is limited to 16, with the balance being intact fuel assemblies. OR

† See Section *2.1*~~1.2.3 and Appendix B to the CoC~~ for a complete description of cask *authorized cask* contents and fuel specifications~~, respectively~~.

Table 1.2.1 (continued)
KEY SYSTEM DATA FOR HI-STORM 100 SYSTEM

ITEM	QUANTITY	NOTES
MPC storage capacity:	MPC-68F	Up to 4 damaged fuel containers with ~~Zircaloy~~-*ZR* clad Dresden Unit 1 (D-1) or Humboldt Bay (HB) BWR fuel debris and the complement damaged ~~Zircaloy~~ *ZR* clad Dresden Unit 1 or Humboldt Bay BWR fuel assemblies in damaged fuel containers or intact Dresden Unit 1 or Humboldt Bay BWR intact fuel assemblies. OR
	MPC-68FF	Up to 68 Dresden Unit 1 or Humboldt Bay intact fuel or damaged fuel and up to 8 damaged fuel containers containing D-1 or HB fuel debris. For other BWR plants, up to 16 damaged fuel containers containing BWR damaged fuel and/or fuel debris with the complement intact fuel assemblies, up to a total of 68. The number of damaged fuel containers containing BWR fuel debris is limited to eight (8) for all BWR plants.

Table 1.2.2
KEY PARAMETERS FOR HI-STORM 100 MULTI-PURPOSE CANISTERS

	PWR	BWR
Pre-disposal service life (years)	40	40
Design temperature, max./min. (°F)	725°†/-40°††	725°†/-40°††
Design internal pressure (psig)		
Normal conditions	100	100
Off-normal conditions	~~100~~*110*	~~100~~*110*
Accident Conditions	200	200
Total heat load, max. (kW)	*38*	*35.5*
Maximum permissible peak fuel cladding temperature:		
Long Term Normal (°F)	~~See Table 2.2.3~~*752*	~~See Table 2.2.3~~*752*
Short Term *Operations* (°F)	*752 or 1058*†††	*752 or 1058*†††
Off-normal and Accident (°F)	1058	1058
MPC internal environment helium fill *(99.995% fill helium purity)*	*(all pressure ranges are at a reference temperature of 70°F)*	*(all pressure ranges are at a reference temperature of 70°F)*
MPC-24		
(heat load ≤ 27.77 kW)	*≥ 29.3 psig and ≤ 48.8 psig*	
(heat load > 27.77 kW)	*≥ 45.2 psig and ≤ 48.8 psig*	
MPC-24E/24EF		
(heat load ≤ 28.17 kW)	*≥ 29.3 psig and ≤ 48.8 psig*	
(heat load > 28.17 kW)	*≥ 45.2 psig and ≤ 48.8 psig*	
MPC-68/68F/68FF		*0.1218 +/-10% g-moles/liter*
(heat load ≤ 28.19 kW)		*OR* *≥ 29.3 psig and ≤ 48.8 psig*
(heat load > 28.19 kW)		*≥ 45.2 psig and ≤ 48.8 psig*
MPC-32/32F		
(heat load ≤ 28.74 kW)	*≥ 29.3 psig and ≤ 48.8 psig*	
(heat load > 28.74 kW)	*≥ 45.2 psig and ≤ 48.8 psig*	
Maximum permissible multiplication factor (k_{eff}) including all uncertainties and biases	< 0.95	< 0.95

† Maximum normal condition design temperatures for the MPC fuel basket. A complete listing of design temperatures for all components is provided in Table 2.2.3.

†† Temperature based on off-normal minimum environmental temperatures specified in Section 2.2.2.2 and no fuel decay heat load.

††† *See Section 4.5 for discussion of the applicability of the 1058°F temperature limit during MPC drying.*

Table 1.2.2 (cont'd)
KEY PARAMETERS FOR HI-STORM 100 MULTI-PURPOSE CANISTERS

	PWR	BWR
Fixed Neutron Absorber ~~Boral~~ ^{10}B Areal Density (g/cm^2) *Boral/METAMIC*	0.0267/*0.0223* (MPC-24) 0.0372/*0.0310* (MPC-24E, MPC-24EF & MPC-32, & MPC-32F)	0.0372/*0.0310* (MPC-68 & MPC-68FF) 0.01/*NA* (MPC-68F) *(See Note 1)*
End closure(s)	Welded	Welded
Fuel handling	Opening compatible with standard grapples	Opening compatible with standard grapples
Heat dissipation	Passive	Passive

NOTES:

1. All MPC-68F canisters are equipped with Boral neutron absorber.

Table 1.2.3

INTENTIONALLY DELETED

Table 1.2.4

INTENTIONALLY DELETED

Table 1.2.5

INTENTIONALLY DELETED

Table 1.2.6

HI-STORM 100 OPERATIONS SEQUENCE

Site-specific handling and operations procedures will be prepared, reviewed, and approved by each owner/user.	
1	HI-TRAC and MPC lowered into the fuel pool without lids
2	Fuel assemblies transferred into the MPC fuel basket
3	MPC lid lowered onto the MPC
4	HI-TRAC/MPC assembly moved to the decon pit and MPC lid welded in place, volumetrically or multi-layer PT examined, ~~hydrostatically tested,~~ and ~~leak~~*pressure* tested
5	MPC dewatered, moisture removed, backfilled with helium, and the closure ring welded
6	HI-TRAC annulus drained and external surfaces decontaminated
7	MPC lifting cleats installed and MPC weight supported by rigging
8	HI-TRAC pool lid removed and transfer lid attached (not applicable to HI-TRAC 125D)
9	MPC lowered and seated on HI-TRAC transfer lid (not applicable to HI-TRAC 125D)
9a	HI-STORM mating device secured to top of empty HI-STORM overpack (HI-TRAC 125D only)
10	HI-TRAC/MPC assembly transferred to atop HI-STORM overpack or mating device, as applicable
11	MPC weight supported by rigging and transfer lid doors opened (standard design HI-TRAC) or pool lid removed (HI-TRAC 125D)
12	MPC lowered into HI-STORM overpack, and HI-TRAC removed from atop HI-STORM overpack/mating device
12a	HI-STORM mating device removed (HI-TRAC 125D only)
13	HI-STORM overpack lid installed and bolted in place
14	HI-STORM overpack placed in storage at the ISFSI pad
15	For HI-STORM 100A (or 100SA) users, the overpack is anchored to the ISFSI pad by installation of nuts onto studs and torquing to the minimum required torque.

Table 1.2.7

REPRESENTATIVE ASME BOLTING AND THREADED ROD MATERIALS ACCEPTABLE FOR THE HI-STORM 100A ANCHORAGE SYSTEM

ASME MATERIALS FOR BOLTING

Composition	I.D.	Type Grade or UNC No.	Ultimate Strength (ksi)	Yield Strength (ksi)	Code Permitted Size Range†
C	SA-354	BC K04100	125	109	t ≤ 2.5"
¾ Cr	SA-574	51B37M	170	135	t ≥ 5/8"
1 Cr – 1/5 Mo	SA-574	4142	170	135	t ≥ 5/8"
1 Cr-1/2 Mo-V	SA-540	B21 (K 14073)	165	150	t ≤ 4"
5 Cr – ½ Mo	SA-193	B7	125	105	t ≤ 2.5"
2Ni – ¾ Cr – ¼ Mo	SA-540	B23 (H-43400)	135	120	
2Ni – ¾ Cr – 1/3 Mo	SA-540	B-24 (K-24064)	135	120	
17Cr-4Ni-4Cu	SA-564	630(H-1100)	140	115	
17Cr-4Ni-4Cu	SA-564	630(H-1075)	145	125	
25Ni-15Cr-2Ti	SA-638	660	130	85	
22CR-13Ni-5Mn	SA-479	XM-19(S20910)	135	105	

Note: The materials listed in this table are representative of acceptable materials and have been abstracted from the ASME Code, Section II, Part D, Table 3. Other materials listed in the Code are also acceptable as long as they meet the size requirements, the minimum requirements on yield and ultimate strength (see Table 2.0.4), and are suitable for the environment.

† Nominal diameter of the bolt (or rod) as listed in the Code tables. Two-inch diameter studs/rods are specified for the HI-STORM 100A.

Table 1.2.8

METAMIC® DATA FOR HOLTEC MPCs

MPC Type	*Min. B-10 areal density required by criticality analysis (g/cm^2)*	*Nominal Weight Percent of B_4C and Reference METAMIC® Panel Thickness*			
		100% Credit	*90% Credit*	*75% Credit*	*Ref. Thickness (inch)*
MPC-24	*0.020*	*27.6*	*31*	*37.2*	*0.075*
MPC-68, -68FF, -32, -32F, -24E, and -24EF	*0.0279*	*27.8*	*31*	*37.4*	*0.104*

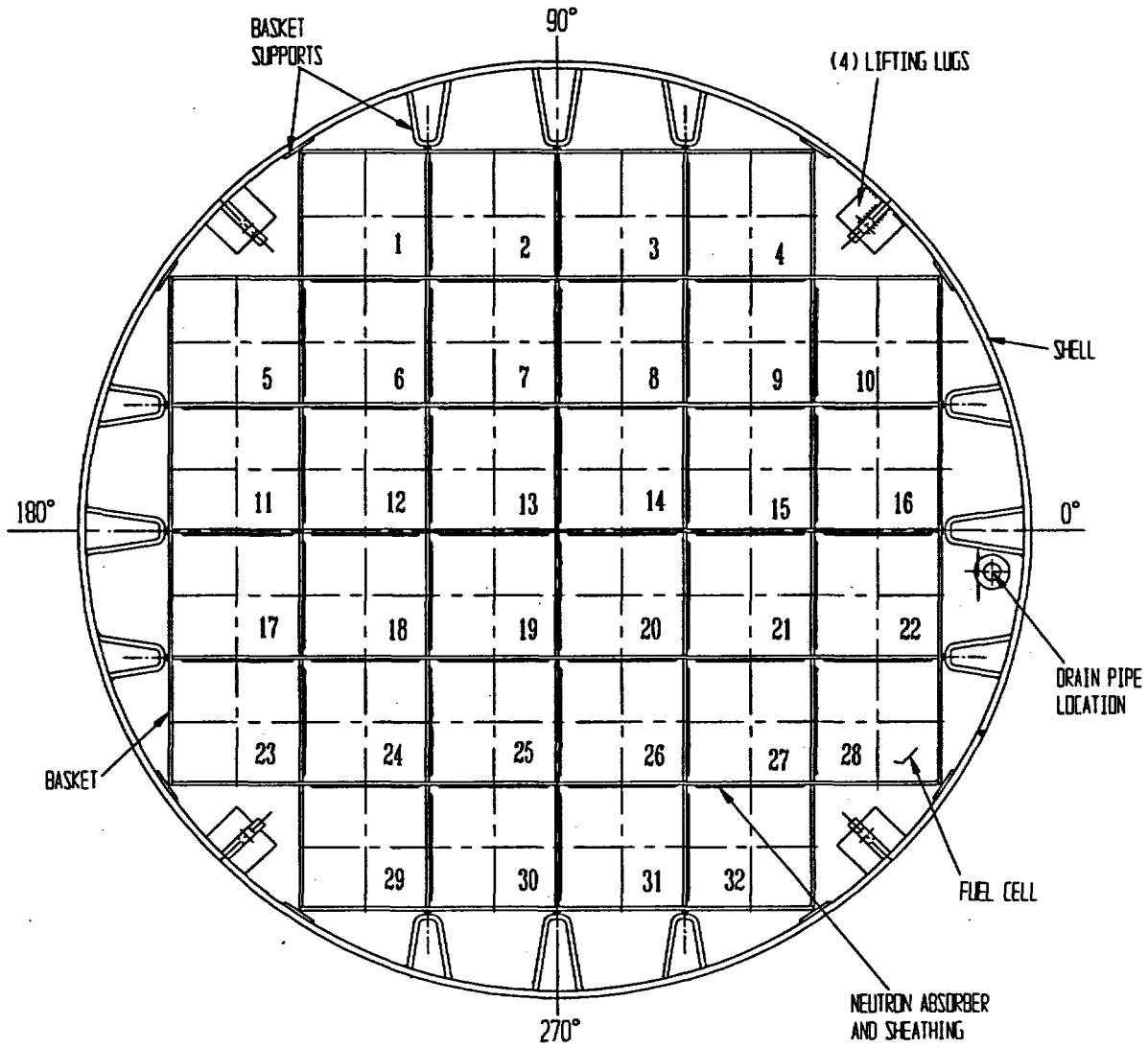

FIGURE 1.2.3; MPC-32/32F CROSS SECTION

1.3 IDENTIFICATION OF AGENTS AND CONTRACTORS

Holtec International is a specialty engineering company with a principal focus on spent fuel storage technologies. Holtec has carried out turnkey wet storage capacity expansions (engineering, licensing, fabrication, removal of existing racks, performance of underwater modifications, volume reduction of the old racks and hardware, installation of new racks, and commissioning of the pool for increased storage capacity) in numerous plants around the world. Over 45 plants in the U.S., Britain, Brazil, Korea, and Taiwan have utilized Holtec's wet storage technology to extend their in-pool storage capacity.

Holtec's corporate engineering consists of experts with advanced degrees (Ph.D.'s) in every discipline germane to the fuel storage technologies, namely structural mechanics, heat transfer, computational fluid dynamics, and nuclear physics. All engineering analyses for Holtec's fuel storage projects (including HI-STORM 100) are carried out in-house.

Holtec International's quality assurance program was originally developed to meet NRC requirements delineated in 10CFR50, Appendix B, and was expanded to include provisions of 10CFR71, Subpart H, and 10CFR72, Subpart G, for structures, systems, and components designated as important to safety. ~~A description of the quality assurance program and its method of~~*The Holtec quality assurance program, which satisfies* ~~satisfying~~ all 18 criteria in 10CFR72, Subpart G, that apply to the design, fabrication, construction, testing, operation, modification, and decommissioning of structures, systems, and components important to safety is *incorporated by reference into this FSAR as described*~~provided~~ in Chapter 13.

It is currently planned that the HI-STORM 100 System will be fabricated by U.S. Tool & Die, Inc. (UST&D) of Pittsburgh, Pennsylvania. UST&D is an N-Stamp holder and a highly respected fabricator of nuclear components. UST&D is on Holtec's Approved Vendors List (AVL) and has a quality assurance program meeting 10CFR50 Appendix B criteria. Extensive prototypical fabrication of the MPCs has been carried out at the UST&D shop to resolve fixturing and tolerance issues. If another fabricator is to be used for the fabrication of any part of the HI-STORM 100 System, the proposed fabricator will be evaluated and audited in accordance with Holtec International's quality assurance program. ~~described in Chapter 13.~~

Construction, assembly, and operations on-site may be performed by Holtec or a licensee as the prime contractor. A licensee shall be suitably qualified and experienced to perform selected activities. Typical licensees are technically qualified and experienced in commercial nuclear power plant construction and operation activities under a quality assurance program meeting 10CFR50 Appendix B criteria.

1.6 REFERENCES

[1.0.1] 10CFR Part 72, "Licensing Requirements for the Storage of Spent Fuel in an Independent Spent Fuel Storage Installation", Title 10 of the Code of Federal Regulations, 1998 Edition, Office of the Federal Register, Washington, D.C.

[1.0.2] Regulatory Guide 3.61 (Task CE306-4) "Standard Format for a Topical Safety Analysis Report for a Spent Fuel Storage Cask", USNRC, February 1989.

[1.0.3] NUREG-1536, "Standard Review Plan for Dry Cask Storage Systems", U.S. Nuclear Regulatory Commission, January 1997.

[1.0.4] American Concrete Institute, "Code Requirements for Nuclear Safety Related Concrete Structures", ACI 349-85, ACI, Detroit, Michigan†

[1.0.5] American Concrete Institute, "Building Code Requirements for Structural Concrete", ACI 318-95, ACI, Detroit, Michigan.

[1.1.1] ASME Boiler & Pressure Vessel Code, Section III, Subsection NB, American Society of Mechanical Engineers, 1995 with Addenda through 1997.

[1.1.2] USNRC Docket No. 72-1008, Final Safety Analysis Report for the (Holtec International Storage, Transport, and Repository) HI-STAR System, latest revision.

[1.1.3] USNRC Docket No. 71-9261, Safety Analysis Report for Packaging for the (Holtec International Storage, Transport, and Repository) HI-STAR System, latest revision.

[1.1.4] 10CFR Part 50, "Domestic Licensing of Production and Utilization Facilities", Title 10 of the Code of Federal Regulations, 1998 Edition, Office of the Federal Register, Washington, D.C.

[1.1.5] Deleted.

[1.2.1] U.S. NRC Information Notice 96-34, "Hydrogen Gas Ignition During Closure Welding of a VSC-24 Multi-Assembly Sealed Basket".

[1.2.2] Directory of Nuclear Reactors, Vol. II, Research, Test & Experimental Reactors, International Atomic Energy Agency, Vienna, 1959.

[1.2.3] V.L. McKinney and T. Rockwell III, "Boral: A New Thermal-Neutron Shield", USAEC Report AECD-3625, August 29, 1949.

† The 1997 edition of ACI-349 is specified for ISFSI pad and embedment design for deployment of the anchored HI-STORM 100A and HI-STORM 100SA.

[1.2.4] Reactor Shielding Design Manual, USAEC Report TID-7004, March 1956.

[1.2.5] "Safety Analysis Report for the NAC Storable Transport Cask", Revision 8, September 1994, Nuclear Assurance Corporation (USNRC Docket No. 71-9235).

[1.2.6] Deleted.

[1.2.7] Materials Handbook, 13th Edition, Brady, G.S. and H.R. Clauser, McGraw-Hill, 1991, Page 310.

[1.2.8] Deleted.

[1.2.9] ANSI N14.6-1993, "American National Standard for Special Lifting Devices for Shipping Containers Weighing 10,000 Pounds (4500 kg) or More for Nuclear Materials," American National Standards Institute, June, 1993.

[1.2.10] Deleted.

[1.2.11] "Qualification of METAMIC® for Spent Fuel Storage Application," EPRI, 1003137, Final Report, October 2001.

[1.2.12] "Safety Evaluation by the Office of Nuclear Reactor Regulation Related to Holtec International Report HI-2022871 Regarding Use of Metamic in Fuel Pool Applications," Facility Operating License Nos. DPR-51 and NPF-6, Entergy Operations, Inc., Docket No. 50-313 and 50-368, USNRC, June 2003.

[1.2.13] "Metamic 6061+40% Boron Carbide Metal Matrix Composite Test", California Consolidated Tech. Inc. Report dated August 21, 2001 to NAC International.

APPENDIX 1.B: HOLTITE ™ MATERIAL DATA

The information provided in this appendix describes the neutron absorber material, Holtite-A for the purpose of confirming its suitability for use as a neutron shield material in spent fuel storage casks. Holtite-A is one of the family of Holtite neutron shield materials denoted by the generic name Holtite™. It is currently the only neutron shield material approved for installation in the ~~HI-STAR 100~~*HI-TRAC transfer* cask. It is chemically identical to NS-4-FR which was originally developed by Bisco Inc. and used for many years as a shield material with B_4C or Pb added.

Holtite-A contains aluminum hydroxide ($Al(OH)_3$) in an epoxy resin binder. Aluminum hydroxide is also known by the industrial trade name of aluminum tri-hydrate or ATH. ATH is often used commercially as a fire-retardant. Holtite-A contains approximately 62% ATH supported in a typical 2-part epoxy resin as a binder. Holtite-A contains 1% (nominal) by weight B_4C, a chemically inert material added to enhance the neutron absorption property. Pertinent properties of Holtite-A are listed in Table 1.B.1.

The essential properties of Holtite-A are:

1. the hydrogen density (needed to thermalize neutrons),
2. thermal stability of the hydrogen density, and
3. the uniformity in distribution of B_4C needed to absorb the thermalized neutrons.

ATH and the resin binder contain nearly the same hydrogen density so that the hydrogen density of the mixture is not sensitive to the proportion of ATH and resin in the Holtite-A mixture. B_4C is added as a finely divided powder and does not settle out during the resin curing process. Once the resin is cured (polymerized), the ATH and B_4C are physically retained in the hardened resin. Qualification testing for B_4C throughout a column of Holtite-A has confirmed that the B_4C is uniformly distributed with no evidence of settling or non-uniformity. Furthermore, an excess of B_4C is specified in the Holtite-A mixing and pouring procedure as a precaution to assure that the B_4C concentration is always adequate throughout the mixture.

The specific gravity specified in Table 1.B.1 does not include an allowance for weight loss. The specific gravity assumed in the shielding analysis includes a 4% reduction to conservatively account for potential weight loss at the design temperatures *listed in Table 1.B.1.* ~~of 300°F~~ or an inability to reach theoretical density. Tests on the stability of Holtite-A were performed by Holtec International. The results of the tests are summarized in Holtec Reports HI-2002396, "Holtite-A Development History and Thermal Performance Data" and HI-2002420, "Results of Pre- and Post-Irradiation Test Measurements." The information provided in these reports demonstrates that Holtite-A™ possesses the necessary thermal and radiation stability characteristics to function as a reliable shielding material in the ~~HI-STAR 100 overpack~~*HI-TRAC transfer cask.*

The Holtite-A is encapsulated in the ~~HI-STAR 100 overpack~~*HI-TRAC transfer cask lid* and, therefore, should experience a very small weight reduction during the design life of the ~~HI-STAR~~

~~100 System~~*cask*. The data and test results confirm that Holtite-A remains stable under design thermal and radiation conditions, the material properties meet or exceed that assumed in the shielding analysis, and the B_4C remains uniformly distributed with no evidence of settling or non-uniformity.

Based on the information described above, Holtite-A meets all of the requirements for an acceptable neutron shield material.

Table 1.B.1

REFERENCE PROPERTIES OF HOLTITE-A NEUTRON SHIELD MATERIAL

PHYSICAL PROPERTIES	
% ATH	62 nominal
Specific Gravity	1.68 g/cc nominal
Max. Continuous Operating Temperature	300°F
Max. Short-Term Operating Temperature	*350°F (Note 1)*
Hydrogen Density	0.096 g/cc minimum
Radiation Resistance	Excellent
CHEMICAL PROPERTIES (Nominal)	
wt% Aluminum	21.5
wt% Hydrogen	6.0
wt% Carbon	27.7
wt% Oxygen	42.8
wt% Nitrogen	2.0
wt% B_4C	1.0

NOTES:

1. *As defined in Section 2.2, all operations involving the HI-TRAC transfer cask are short-term operating conditions. The short-term operating temperature limit is, therefore, the appropriate maximum design temperature for the Holtite-A in the HI-TRAC transfer cask.*

PAGES 1.B-4 THROUGH 1.B-20 INTENTIONALLY DELETED

APPENDIX 1.D: Requirements on HI-STORM 100 Shielding Concrete

1.D.1 Introduction

The HI-STORM 100 overpack utilizes plain concrete for neutron and gamma shielding. While most of the shielding concrete used in the HI-STORM 100 overpack is installed in the annulus between the concentric structural shells, smaller quantities of concrete are also present in the pedestal shield and the overpack lid. Because plain concrete has little ability to withstand tensile stresses, but is competent in withstanding compressive and bearing loads, the design of the HI-STORM 100 overpack places no reliance on the tension-competence of the shielding concrete. ACI 318-95 provides formulas for permissible compressive and bearing stresses in plain concrete which incorporate a penalty over the corresponding permissible values in reinforced concrete. The formulas for permissible compressive and bearing stresses set forth in ACI 318-95 are used in calculations supporting this TSAR in load cases involving compression or bearing loads on the overpack concrete. However, since ACI 318-95 is intended for commercial applications and the overpack concrete is designated as an ITS Category B material, it is necessary to invoke provisions of ACI 349 (85) (which is sanctioned by NUREG-1536) for all requirements except for the allowable stress formulas (which do not exist in ACI 349) and load combinations. This appendix provides a complete set of criteria applicable to the plain concrete in the HI-STORM 100 overpack.

1.D.2 Design Requirements

The primary function of the plain concrete is to provide neutron and gamma shielding. As plain concrete is a competent structural member in compression, the plain concrete's effect on the performance of the HI-STORM overpack is included. The formulas for permissible compressive and bearing stresses set forth in ACI 318-95 are used. However, as plain concrete has very limited capabilities in tension, no tensile strength is allotted to the concrete.

The steel structure of the HI-STORM overpack provides the strength to meet all load combinations specified in Chapters 2 and 3. Credit for the structural strength of the plain concrete is limited to the compressive load carrying capability of the concrete in calculations appropriate to handling and transfer operations, and to demonstrate that the HI-STORM 100 System continues to provide functional performance in a post-accident environment. Therefore, the load combinations provided in ACI 349 and NUREG-1536, Table 3-1 are not applied to the plain concrete.

The shielding performance of the plain concrete is maintained by ensuring that the allowable concrete temperature limits are not exceeded. The thermal analyses for normal and off-normal conditions demonstrate that the plain concrete does not exceed the allowable long term temperature limit provided in Table 1.D.1. Under accident conditions, the bulk of the plain concrete in the HI-STORM overpack does not exceed the allowable short term temperature limit provided in Table 1.D.1. Any portion of the plain concrete which exceeds the short term temperature limit under accident conditions is neglected in the post-accident shielding analysis and in any post-accident structural analysis.

1.D.3 Material Requirements

Table 1.D.1 provides the material limitations and requirements applicable to the overpack plain concrete. These requirements are drawn from ACI 349 (85) supplemented by the provisions of NUREG 1536 (page 3-21) and standard good practice. Two different minimum concrete densities are specified for the overpack concrete, based on the presence or absence of the steel shield shell.

1.D.4 Construction Requirements

The HI-STORM 100 overpack is composed of a steel structure that houses plain concrete. The steel structure acts as the framework for the pouring of the concrete. The steel structure defines the dimensions of the concrete which ensures that the required thickness of concrete is provided. The fabrication sequence for the HI-STORM 100 overpack as it pertains to the concrete is provided below. All item numbers are taken from the design drawings. All nomenclature is taken from the bills-of-material.

The steel structure of the HI-STORM 100 overpack body is assembled at a qualified steel fabrication facility. However, access remains to the annulus formed by the overpack inner and outer shells (Items 3 and 2, respectively); likewise, the pedestal shell (Item 5) is welded to the baseplate (Item 1) and the pedestal platform (Item 24) to form the pedestal cavity, but penetrations exist in the baseplate to allow placement of concrete. The steel structure of the overpack body is transported to the reactor site or a nearby concrete facility.

Once the steel structure of the body is received, the body will be inspected to ensure the steel structure meets the requirements of Sections 5.1 and 6.1 of ACI 349. The concrete shall be mixed, conveyed, and deposited in accordance with Sections 5.2 through 5.4 of ACI 349. Sufficient rigidity in the steel structure overpack body is provided such that all the concrete may be placed in a single pour into each of the four segments formed by the inner shell (Item 3), outer shell (Item 2), and radial plates (Item 14). If more than one pour is performed, the requirements of Section 6.4 of ACI 349 must be met for construction joints. The pedestal shell may require bracing and support in accordance with Section 6.1 of ACI 349 to maintain the proper position and shape.

Mixing and placing of the concrete shall follow the guidance of Sections 5.6 and 5.7 for cold and hot weather conditions, respectively. Consolidation of the plain concrete shall be performed in accordance with ACI 309-87. As no reinforcement is placed in the concrete, the possibility of voids is greatly diminished. Curing of the concrete shall be in accordance with Section 5.5 of ACI 349. Water curing or accelerated curing using sealing materials methods may be used as described in ACI 308-92, Standard Practice for Curing Concrete. This would include the use of either a plastic film or a curing compound.

Non-shrink grout shall be applied as necessary to account for any deviation of the concrete elevation. To fabricate the overpack lid an identical process is followed.

Table 1.D.1 provides the construction limitations and requirements applicable to the overpack plain concrete. These requirements are drawn from ACI 349 (85).

1.D.5 Testing Requirements

Table 1.D.2 provides the testing requirements applicable to the overpack plain concrete. These requirements are drawn from ACI 349 (85).

Table 1.D.1: Requirements for Plain Concrete

ITEM	APPLICABLE LIMIT OR REFERENCE
Density in overpack body (Minimum)	146 lb/ft^3 (HI-STORM 100 up to Serial Number (S/N) 7), 155 lb/ft^3 (HI-STORM 100 S/N 8 and higher, and HI-STORM 100S)
Density in lid and pedestal (Minimum)	146 lb/ft^3
Specified Compressive Strength	3,300 psi (min.)
Compressive and Bearing Stress Limit	Per ACI 318-95
Cement Type and Mill Test Report	Type II; Section 3.2 (ASTM C 150 or ASTM C595)
Aggregate Type	Section 3.3 (including ASTM C33(Note 2))
Nominal Maximum Aggregate Size	1 (inch)
Water Quality	Per Section 3.4
Material Testing	Per Section 3.1
Admixtures	Per Section 3.6
Maximum Water to Cement Ratio	0.5 (Table 4.5.2)
Maximum Water Soluble Chloride Ion Cl in Concrete	1.00 percent by weight of cement (Table 4.5.4)
Concrete Quality	Per Chapter 4 of ACI 349
Mixing and Placing	Per Chapter 5 of ACI 349
Consolidation	Per ACI 309-87
Quality Assurance	Per Holtec Quality Assurance Manual, 10 CFR Part 72, Appendix G commitments
~~Maximum~~ ~~Local~~ *Section Average* Temperature Limit Under Long Term Conditions	*3*200°F (See Note 3)
~~Maximum~~ Section Average Temperature Limit Under Short Term Conditions	350°F (Appendix A, Subsection A.4.2)
Aggregate Maximum Value[2] of Coefficient of Thermal Expansion (tangent in the range of 70°F to 100°F)	6E-06 inch/inch/°F (NUREG-1536, 3.V.2.b.i.(2)(c)2.b)

Notes:

1. All section and table references are to ACI 349 (85).

2. The coarse aggregate shall meet the requirements of ASTM C33 for class designation 1S from Table 3. However, if the requirements of ASTM C33 cannot be met, concrete that has been shown by special tests or actual service to produce concrete of adequate strength and durability meeting the requirements of Tables 1.D.1 and 1.D.2 is acceptable in accordance with ACI 349 Section 3.3.2.

3. The *3*200 °F long term temperature limit is specified in accordance with ~~Paragraph A.4.3 of ACI 349~~ *NUREG-1536, Paragraph 3.V.2.b.i(2)(c)2* for normal conditions. The *3*200 °F long term temperature limit is based on (1) the use of Type II cement, specified aggregate criteria, and the specified compressive stress in Table 1.D.1 ~~, (2) the relatively small increase in long term temperature limit over the 150°F specified in Paragraph A.4.1,~~ and (*2*3) the very low maximum stresses calculated for normal and off-normal conditions in Section 3.4 of this FSAR.

---

2 The following aggregate types are a priori acceptable: limestone, dolomite, marble, basalt, granite, gabbro, or rhyolite. The thermal expansion coefficient limit does not apply when these aggregates are used. Careful consideration shall be given to the potential of long-term degradation of concrete due to chemical reactions between the aggregate and cement selected for HI-STORM 100 overpack concrete.

Table 1.D.2: Testing Requirements for Plain Concrete

TEST	SPECIFICATION
Compression Test	ASTM C31, ASTM C39, ASTM C192
Unit Weight (Density)	ASTM C138
Maximum Water Soluble Chloride Ion Concentration	Federal Highway Administration Report FHWA-RD-77-85, "Sampling and Testing for Chloride Ion in Concrete"

CHAPTER 2†: PRINCIPAL DESIGN CRITERIA

This chapter contains a compilation of design criteria applicable to the HI-STORM 100 System. The loadings and conditions prescribed herein for the MPC, particularly those pertaining to mechanical accidents, are far more severe in most cases than those required for 10CFR72 compliance. The MPC is designed to be in compliance with both 10CFR72 and 10CFR71 and therefore certain design criteria are overly conservative for storage. This chapter sets forth the loading conditions and relevant acceptance criteria; it does not provide results of any analyses. The analyses and results carried out to demonstrate compliance with the design criteria are presented in the subsequent chapters of this report.

This chapter is in full compliance with NUREG-1536, except for the exceptions and clarifications provided in Table 1.0.3. Table 1.0.3 provides the NUREG-1536 review guidance, the justification for the exception or clarification, and the Holtec approach to meet the intent of the NUREG-1536 guidance.

2.0 PRINCIPAL DESIGN CRITERIA

The design criteria for the MPC, HI-STORM overpack, and HI-TRAC transfer cask are summarized in Tables 2.0.1, 2.0.2, and 2.0.3, respectively, and described in the sections that follow.

2.0.1 MPC Design Criteria

General

The MPC is designed for 40 years of service, while satisfying the requirements of 10CFR72. The adequacy of the MPC design for the design life is discussed in Section 3.4.12.

Structural

The MPC is classified as important to safety. The MPC structural components include the internal fuel basket and the enclosure vessel. The fuel basket is designed and fabricated as a core support structure, in accordance with the applicable requirements of Section III, Subsection NG of the ASME Code, with certain NRC-approved alternatives, as discussed in Section 2.2.4. The enclosure vessel is designed and fabricated as a Class 1 component pressure vessel in accordance with Section III, Subsection NB of the ASME Code, with certain NRC-approved alternatives, as discussed in Section 2.2.4. The principal exception is the MPC lid, vent and drain port cover plates, and closure ring welds to the MPC lid and shell, as discussed in Section 2.2.4. In addition, the threaded holes in the

† This chapter has been prepared in the format and section organization set forth in Regulatory Guide 3.61. However, the material content of this chapter also fulfills the requirements of NUREG-1536. Pagination and numbering of sections, figures, and tables are consistent with the convention set down in Chapter 1, Section 1.0, herein. Finally, all terms-of-art used in this chapter are consistent with the terminology of the glossary (Table 1.0.1) and component nomenclature of the Bill-of-Materials (Section 1.5).

MPC lid are designed in accordance with the requirements of ANSI N14.6 for critical lifts to facilitate vertical MPC transfer.

The MPC closure welds are partial penetration welds that are structurally qualified by analysis, as presented in Chapter 3. The MPC lid and closure ring welds are inspected by performing a liquid penetrant examination of the root pass and/or final weld surface (if more than one weld pass was required), in accordance with the drawings contained in Section 1.5. The integrity of the MPC lid weld is further verified by performing a volumetric (or multi-layer liquid penetrant) examination, *and* a *Code*~~hydrostatic~~ pressure test~~. and a helium leak test, in accordance with the drawings and the CoC.~~

The structural analysis of the MPC, in conjunction with the redundant closures and nondestructive examination, ~~hydrostatic~~ pressure testing, and helium leak testing *(*performed during MPC fabrication*)*~~ and MPC closure~~, provides assurance of canister closure integrity in lieu of the specific weld joint requirements of Section III, Subsection NB.

Compliance with the ASME Code as it is applied to the design and fabrication of the MPC and the associated justification are discussed in Section 2.2.4. The MPC is designed for all design basis normal, off-normal, and postulated accident conditions, as defined in Section 2.2. These design loadings include postulated drop accidents while in the cavity of the HI-STORM overpack or the HI-TRAC transfer cask. The load combinations for which the MPC is designed are defined in Section 2.2.7. The maximum allowable weight and dimensions of a fuel assembly to be stored in the MPC are limited in accordance with Section 2.1.5.

The structural analysis to evaluate the margin against fuel rod damage from buckling under the drop accident scenario remains unchanged considering ISG-11, Revision 2 because no credit for the tensile stresses in the fuel rods due to internal pressure is taken. Because recognition of the state of tensile axial stress in the fuel cladding permitted by ISG-11 Revision 2, increases the resistance under axial buckling, neglecting the internal pressure buckling analysis is conservative. Therefore, compliance with ISG-11 Revision 2 does not have material effect on the structural analyses summarized in Chapter 3 of this FSAR.

Thermal

~~The allowable Zircaloy fuel cladding temperature limits to prevent cladding failure during long-term dry storage conditions for moderate burnup fuel in the MPC are based on LLNL Report UCID-21181 [2.2.14]. To provide additional conservatism, the permissible fuel cladding temperature limits, which are lower than those calculated with the LLNL methodology, have been calculated based on PNL Report 6189 [2.0.3]. Stainless steel cladding is demonstrated to withstand higher temperatures than that of Zircaloy cladding in EPRI Report TR-106440 [2.2.13]. However, the Zircaloy fuel cladding temperature limits are conservatively applied to the stainless steel fuel cladding. Allowable fuel cladding temperatures for high burnup fuel assemblies are determined using a creep-strain model, developed by Holtec, and described in further detail in Appendix 4.A. The allowable fuel cladding temperatures which correspond to varying cooling times for the SNF to be stored in the MPCs are provided in Table 2.2.3.~~

The design and operation of the HI-STORM 100 System meets the intent of the review guidance contained in ISG-11, Revision 2 [2.0.8]. Specifically, the ISG-11 provisions that are explicitly invoked and satisfied are:

i. The thermal acceptance criteria for all commercial spent fuel (CSF) authorized by the USNRC for operation in a commercial reactor are unified into one set of requirements.

ii. The maximum value of the calculated temperature for all CSF (including ZR and stainless steel fuel cladding materials) under long-term normal conditions of storage and for short-term operations, including canister drying, helium backfill, and on-site cask transport operations must not exceed 400°C (752°F). For drying of MPCs containing all moderate burnup fuel, some flexibility to the system user is allowed provided one additional criterion on the maximum cladding stress is satisfied, as discussed in Section 4.5.

iii. The maximum fuel cladding temperature as a result of an off-normal or accident event must not exceed 570°C (1058°F).

iv. For High Burnup Fuel (HBF), operating restrictions are imposed to limit the maximum temperature excursion during short-term operations to 65°C (117°F).

To achieve compliance with the above criteria, certain design and operational changes are necessary, as summarized below.

i. The peak fuel cladding temperature limit (PCT) for long term storage operations and short term operations is set at 400°C (752°F). For MPCs containing all moderate burnup fuel, the fuel cladding temperature limit maybe set at 570°C (1058°F) if fuel cladding stress is shown to be less than 90 MPa. Appropriate analyses have been performed as discussed in Chapter 4 and operating restrictions added to ensure these limits are met (see Section 4.5).

ii. For MPCs containing at least one high burnup fuel (HBF) assembly and for relatively high heat load MPCs containing all MBF, the forced helium dehydration (FHD) method of MPC cavity drying must be used to meet the PCT limit and satisfy the 65°C temperature excursion criterion for HBF.

iii. The off-normal and accident condition PCT limit remains unchanged (1058°F).

iv. Threshold heat loads, below which a loaded MPC may reside in a HI-TRAC transfer cask without supplemental cooling have been established to ensure the fuel cladding temperature limits are met for this normal short-term operating condition. These limits are based on the heat load of the contained MPC and the orientation in which the HI-TRAC is handled. For heat loads higher than the threshold values, supplemental cooling is required to ensure fuel cladding temperatures remain below the applicable temperature limit (see Section 4.5).

~~The short-term allowable fuel cladding temperature that is applicable to off-normal and accident conditions, as well as the fuel loading, canister closure, and canister transfer operations in the HI-TRAC transfer cask, is 570°C (1058°F) based on PNL-4835 [2.2.15].~~ *The MPC cavity is dried using either a vacuum drying system, or a forced helium dehydration system (see Appendix 2.B).* The MPC is backfilled with 99.995% pure helium in accordance with the ~~technical specifications~~*limits in Table 1.2.2* during canister sealing operations to promote heat transfer and prevent cladding degradation.

The design temperatures for the structural steel components of the MPC are based on the temperature limits provided in ASME Section II, Part D, tables referenced in ASME Section III, Subsection NB and NG, for those load conditions under which material properties are relied on for a structural load combination. The specific design temperatures for the components of the MPC are provided in Table 2.2.3.

The MPCs are designed for a bounding thermal source term, as described in Section 2.1.6. The maximum allowable fuel assembly heat load for each MPC is limited ~~in accordance with the Approved Contents section of Appendix B to the CoC~~*as specified in Section 2.1.9.*

Each MPC model, *except MPC-68F,* allows for two fuel loading strategies. The first is uniform fuel loading, wherein any authorized fuel assembly may be stored in any fuel storage location, subject to other restrictions ~~in the CoC~~, such as ~~preferential fuel loading and~~ location requirements for damaged fuel containers (DFCs) and fuel with integral non-fuel hardware (e.g., control rod assemblies). The second is regionalized fuel loading, wherein the basket is segregated into two regions. ~~as defined in Appendix B to the CoC.~~ Region 1 is the inner region where fuel assemblies with higher heat emission rates may be stored and Region 2 is the outer region where fuel assemblies with lower heat emission rates are stored. Regionalized loading allows for storage of fuel assemblies with higher heat emission rates (in Region 1) than would otherwise be authorized for loading under a uniform loading strategy. Regionalized loading strategies must also comply with other requirements ~~of the CoC~~, such as those for DFCs and non-fuel hardware. Specific fuel assembly cooling time, burnup, and decay heat limits for regionalized loading are *presented in Section 2.1.9*~~provided in the Approved Contents section of Appendix B to the CoC~~. The two fuel loading regions are defined by fuel storage location number in Table 2.1.13 (refer to Figures 1.2.2 through 1.2.4). Regionalized fuel loading meets the intent of preferential fuel loading. *For MPC-68F, only uniform loading is permitted.*

Shielding

The allowable doses for an ISFSI using the HI-STORM 100 System are delineated in 10CFR72.104 and 72.106. Compliance with these regulations for any particular array of casks at an ISFSI is necessarily site-specific and is to be demonstrated by the licensee, as discussed in Chapters 5 and 12. Compliance with these regulations for a single cask and several representative cask arrays is demonstrated in Chapters 5 and ~~7~~*10.*

The MPC provides axial shielding at the top and bottom ends to maintain occupational exposures ALARA during canister closure and handling operations. The occupational doses are controlled in accordance with plant-specific procedures and ALARA requirements (discussed in Chapter 10).

The MPCs are designed for design basis fuel as described in Sections 2.1.7 and 5.2. The radiological source term for the MPCs is limited based on the burnup and cooling times specified in ~~Appendix B to the CoC~~*Section 2.1.9*. Calculated dose rates for each MPC are provided in Section 5.1. These dose rates are used to perform an occupational exposure evaluation~~ in accordance with 10CFR20~~, as discussed in Chapter 10.

Criticality

The MPCs provide criticality control for all design basis normal, off-normal, and postulated accident conditions, as discussed in Section 6.1. The effective neutron multiplication factor is limited to k_{eff} < 0.95 for fresh unirradiated fuel with optimum water moderation and close reflection, including all biases, uncertainties, and MPC manufacturing tolerances.

Criticality control is maintained by the geometric spacing of the fuel assemblies, fixed borated neutron absorbing materials ~~(Boral)~~ incorporated into the fuel basket assembly, and, for certain MPC models, soluble boron in the MPC water. The minimum specified boron concentration verified during ~~Boral~~ *neutron absorber* manufacture is further reduced by 25% for criticality analysis *for Boral-equipped MPCs and by 10% for METAMIC®-equipped MPCs*. No credit is taken for burnup. The maximum allowable initial enrichment for fuel assemblies to be stored in each MPC is limited. ~~in accordance with the Approved Contents section of Appendix B to the CoC.~~ *Enrichment limits and* ~~S~~soluble boron concentration requirements are delineated in *Section 2.1.9*~~the Technical Specifications in Appendix A to the CoC~~ *consistent with the criticality analysis described in Chapter 6.*

Confinement

The MPC provides for confinement of all radioactive materials for all design basis normal, off-normal, and postulated accident conditions~~, as discussed in Section 7.1~~. *As discussed in Section 7.1, the Holtec MPC design meets the guidance in Interim Staff Guidance 18 to classify confinement boundary leakage as non-credible.* ~~A non-mechanistic breach of the canister and subsequent release of available fission products in accordance with specified release fractions is considered, as discussed in Section 7.3.~~ *Therefore, no confinement dose analysis is performed.* The confinement function of the MPC is verified through ~~hydrostatic~~ *pressure* testing, *fabrication shop* helium leak testing and weld examinations performed in accordance with the acceptance test program in Chapter 9.

Operations

There are no radioactive effluents that result from storage or transfer operations. Effluents generated during MPC loading are handled by the plant's radwaste system and procedures.

Generic operating procedures for the HI-STORM 100 System are provided in Chapter 8. Detailed operating procedures will be developed by the licensee based on Chapter 8, site-specific requirements that comply with the 10CFR50 Technical Specifications for the plant, and the HI-STORM 100 System CoC.

Acceptance Tests and Maintenance

The fabrication acceptance basis and maintenance program to be applied to the MPCs are described in Chapter 9. The operational controls and limits to be applied to the MPCs are discussed in Chapter 12. Application of these requirements will assure that the MPC is fabricated, operated, and maintained in a manner that satisfies the design criteria defined in this chapter.

Decommissioning

The MPCs are designed to be transportable in the HI-STAR overpack and are not required to be unloaded prior to shipment off-site. Decommissioning of the HI-STORM 100 System is addressed in Section 2.4.

2.0.2 HI-STORM Overpack Design Criteria

General

The HI-STORM overpack is designed for 40 years of service, while satisfying the requirements of 10CFR72. The adequacy of the overpack design for the design life is discussed in Section 3.4.11.

Structural

The HI-STORM overpack includes both concrete and structural steel components that are classified as important to safety.

The concrete material is defined as important to safety because of its importance to the shielding analysis. The primary function of the HI-STORM overpack concrete is shielding of the gamma and neutron radiation emitted by the spent nuclear fuel.

Unlike other concrete storage casks, the HI-STORM overpack concrete is enclosed in steel inner and outer shells connected to each other by four radial ribs, and top and bottom plates. Where typical concrete storage casks are reinforced by rebar, the HI-STORM overpack is supported by the inner and outer shells connected by four ribs. As the HI-STORM overpack concrete is not reinforced, the structural analysis of the overpack only credits the compressive strength of the concrete. Providing further conservatism, the structural analyses for normal conditions demonstrate that the allowable stress limits of the structural steel are met even with no credit for the strength of the concrete. During accident conditions (e.g., tornado missile, tip-over, end drop, and earthquake), only the compressive strength of the concrete is accounted for in the analysis to provide an appropriate simulation of the accident condition. Where applicable, the compressive strength of the concrete is calculated in accordance with ACI-318-95 [2.0.1].

In recognition of the conservative assessment of the HI-STORM overpack concrete strength and the primary function of the concrete being shielding, the applicable requirements of ACI-349 [2.0.2] are invoked in the design and construction of the HI-STORM overpack concrete as specified in Appendix 1.D.

Steel components of the storage overpack are designed and fabricated in accordance with the requirements of ASME Code, Section III, Subsection NF for Class 3 plate and shell components with certain NRC-approved alternatives.

The overpack is designed for all normal, off-normal, and design basis accident condition loadings, as defined in Section 2.2. At a minimum, the overpack must protect the MPC from deformation, provide continued adequate performance, and allow the retrieval of the MPC under all conditions. These design loadings include a postulated drop accident from the maximum allowable handling height, consistent with the ~~Cask Transport Evaluation program described in Technical Specification Section 5.0 contained in Appendix A to the Co~~*Canalysis described in Section 3.4.9.* The load combinations for which the overpack is designed are defined in Section 2.2.7. The physical characteristics of the MPCs for which the overpack is designed are defined in Chapter 1.

Thermal

The allowable long-term *section average* temperature limit for the overpack concrete is *established in accordance with*~~less than the limit in~~ NUREG-1536, *Section 3.V.2.b.i(2)(c)2,* which *allows a* local concrete temperature limit *of* 300°F~~,~~ if Type II cement is used and aggregates are selected which are acceptable for concrete in this temperature range. Appendix 1.D specifies the cement and aggregate requirements to allow the utilization of the 300°F temperature limit of NUREG-1536.~~; however, a conservative long-term temperature limit of 200 °F is applied to the concrete.~~ For short term conditions the *section average* concrete temperature limit of 350°F is specified in accordance with Appendix A of ACI 349. The allowable temperatures for the structural steel components are based on the maximum temperature for which material properties and allowable stresses are provided in Section II of the ASME Code. The specific allowable temperatures for the structural steel components of the overpack are provided in Table 2.2.3.

The overpack is designed for extreme cold conditions, as discussed in Section 2.2.2.2. The structural steel materials used for the storage cask that are susceptible to brittle fracture are discussed in Section 3.1.2.3.

The overpack is designed for the maximum allowable heat load for steady-state normal conditions, in accordance with Section 2.1.6. The thermal characteristics of the MPCs for which the overpack is designed are defined in Chapter 4.

Shielding

The off-site dose for normal operating conditions at the controlled area boundary is limited by 10CFR72.104(a) to a maximum of 25 mrem/year whole body, 75 mrem/year thyroid, and 25

mrem/year for other critical organs, including contributions from all nuclear fuel cycle operations. Since these limits are dependent on plant operations as well as site-specific conditions (e.g., the ISFSI design and proximity to the controlled area boundary, and the number and arrangement of loaded storage casks on the ISFSI pad), the determination and comparison of ISFSI doses to this limit are necessarily site-specific. Dose rates for a single cask and a range of typical ISFSIs using the HI-STORM 100 System are provided in Chapters 5 ~~and 10~~. The determination of site-specific ISFSI dose rates at the site boundary and demonstration of compliance with regulatory limits is to be performed by the licensee in accordance with 10CFR72.212.

The overpack is designed to limit the calculated surface dose rates on the cask for all MPCs as defined in Section 2.3.5. The overpack is also designed to maintain occupational exposures ALARA during MPC transfer operations, in accordance with 10CFR20. The calculated overpack dose rates are determined in Section 5.1. These dose rates are used to perform a generic occupational exposure estimate for MPC transfer operations and a dose assessment for a typical ISFSI, as described in Chapter 10. ~~In addition, overpack dose rates are limited in accordance with the Technical Specifications provided in Appendix A to the CoC.~~

Confinement

The overpack does not perform any confinement function. Confinement during storage is provided by the MPC and is addressed in Chapter 7. The overpack provides physical protection and biological shielding for the MPC confinement boundary during MPC dry storage operations.

Operations

There are no radioactive effluents that result from MPC transfer or storage operations using the overpack. Effluents generated during MPC loading and closure operations are handled by the plant's radwaste system and procedures under the licensee's 10CFR50 license.

Generic operating procedures for the HI-STORM 100 System are provided in Chapter 8. The licensee is required to develop detailed operating procedures based on Chapter 8, site-specific conditions and requirements that also comply with the applicable 10CFR50 technical specification requirements for the site, and the HI-STORM 100 System CoC.

Acceptance Tests and Maintenance

The fabrication acceptance basis and maintenance program to be applied to the overpack are described in Chapter 9. The operational controls and limits to be applied to the overpack are contained in Chapter 12. Application of these requirements will assure that the overpack is fabricated, operated, and maintained in a manner that satisfies the design criteria defined in this chapter.

Decommissioning

Decommissioning considerations for the HI-STORM 100 System, including the overpack, are addressed in Section 2.4.

2.0.3 HI-TRAC Transfer Cask Design Criteria

General

The HI-TRAC transfer cask is designed for 40 years of service, while satisfying the requirements of 10CFR72. The adequacy of the HI-TRAC design for the design life is discussed in Section 3.4.11.

Structural

The HI-TRAC transfer cask includes both structural and non-structural biological shielding components that are classified as important to safety. The structural steel components of the HI-TRAC, with the exception of the lifting trunnions, are designed and fabricated in accordance with the applicable requirements of Section III, Subsection NF, of the ASME Code with certain NRC-approved alternatives, as discussed in Section 2.2.4. The lifting trunnions and associated attachments are designed in accordance with the requirements of NUREG-0612 and ANSI N14.6 for non-redundant lifting devices.

The HI-TRAC transfer cask is designed for all normal, off-normal, and design basis accident condition loadings, as defined in Section 2.2. At a minimum, the HI-TRAC transfer cask must protect the MPC from deformation, provide continued adequate performance, and allow the retrieval of the MPC under all conditions. These design loadings include a side drop from the maximum allowable handling height, consistent with the technical specifications. The load combinations for which the HI-TRAC is designed are defined in Section 2.2.7. The physical characteristics of each MPC for which the HI-TRAC is designed are defined in Chapter 1.

Thermal

The allowable temperatures for the HI-TRAC transfer cask structural steel components are based on the maximum temperature for material properties and allowable stress values provided in Section II of the ASME Code. The top lid of the HI-TRAC 100 and HI-TRAC 125 incorporate Holtite-A shielding material. This material has a maximum allowable temperature in accordance with the manufacturer's test data. The specific allowable temperatures for the structural steel and shielding components of the HI-TRAC are provided in Table 2.2.3. The HI-TRAC is designed for off-normal environmental cold conditions, as discussed in Section 2.2.2.2. The structural steel materials susceptible to brittle fracture are discussed in Section 3.1.2.3.

The HI-TRAC is designed for the maximum ~~allowable~~ heat load *analyzed for storage operations.* ~~provided in the technical specifications~~ *Based on the heat load of the contained MPC and the orientation in which the transfer cask is handled, supplemental cooling may be required for certain time periods while the MPC is inside the HI-TRAC transfer cask (see Section 4.5).* The HI-TRAC

water jacket maximum allowable temperature is a function of the internal pressure. To preclude over pressurization of the water jacket due to boiling of the neutron shield liquid (water), the maximum temperature of the water is limited to less than the saturation temperature at the shell design pressure. In addition, the water is precluded from freezing during off-normal cold conditions by limiting the minimum allowable temperature and adding ethylene glycol. The thermal characteristics of the fuel for each MPC for which the transfer cask is designed are defined in Section 2.1.6. The working area ambient temperature limit for loading operations is *limited in accordance with the design criteria established for the transfer cask.* ~~delineated in the Design Features section of Appendix B to the CoC.~~

Shielding

The HI-TRAC transfer cask provides shielding to maintain occupational exposures ALARA in accordance with 10CFR20, while also maintaining the maximum load on the plant's crane hook to below either 125 tons or 100 tons, or less, depending on whether the 125-ton or 100-ton HI-TRAC transfer cask is utilized. The HI-TRAC calculated dose rates are reported in Section 5.1. These dose rates are used to perform a generic occupational exposure estimate for MPC loading, closure, and transfer operations, as described in Chapter 10. A postulated HI-TRAC accident condition, which includes the loss of the liquid neutron shield (water), is also evaluated in Section 5.1.2. In addition, HI-TRAC dose rates are controlled in accordance with plant-specific procedures and ALARA requirements (discussed in Chapter 10).

The HI-TRAC 125 and 125D provide better shielding than the 100 ton HI-TRAC. Provided the licensee is capable of utilizing the 125 ton HI-TRAC, ALARA considerations would normally dictate that the 125 ton HI-TRAC should be used. However, sites may not be capable of utilizing the 125 ton HI-TRAC due to crane capacity limitations, floor loading limits, or other site-specific considerations. As with other dose reduction-based plant activities, individual users who cannot accommodate the 125 ton HI-TRAC should perform a cost-benefit analysis of the actions (e.g., modifications) which would be necessary to use the 125 ton HI-TRAC. The cost of the action(s) would be weighed against the value of the projected reduction in radiation exposure and a decision made based on each plant's particular ALARA implementation philosophy.

The HI-TRAC provides a means to isolate the annular area between the MPC outer surface and the HI-TRAC inner surface to minimize the potential for surface contamination of the MPC by spent fuel pool water during wet loading operations. The HI-TRAC surfaces expected to require decontamination are coated. The maximum permissible surface contamination for the HI-TRAC is in accordance with plant-specific procedures and ALARA requirements (discussed in Chapter 10).

Confinement

The HI-TRAC transfer cask does not perform any confinement function. Confinement during MPC transfer operations is provided by the MPC, and is addressed in Chapter 7. The HI-TRAC provides physical protection and biological shielding for the MPC confinement boundary during MPC closure and transfer operations.

Operations

There are no radioactive effluents that result from MPC transfer operations using HI-TRAC. Effluents generated during MPC loading and closure operations are handled by the plant's radwaste system and procedures.

Generic operating procedures for the HI-STORM 100 System are provided in Chapter 8. The licensee will develop detailed operating procedures based on Chapter 8, plant-specific requirements including the Part 50 Technical Specifications, and the HI-STORM 100 System CoC.

Acceptance Tests and Maintenance

The fabrication acceptance basis and maintenance program to be applied to the HI-TRAC Transfer Cask are described in Chapter 9. The operational controls and limits to be applied to the HI-TRAC are contained in Chapter 12. Application of these requirements will assure that the HI-TRAC is fabricated, operated, and maintained in a manner that satisfies the design criteria defined in this chapter.

Decommissioning

Decommissioning considerations for the HI-STORM 100 Systems, including the HI-TRAC transfer cask, are addressed in Section 2.4.

2.0.4 Principal Design Criteria for the ISFSI Pad

2.0.4.1 Design and Construction Criteria

In compliance with 10CFR72, Subpart F, "General Design Criteria", the HI-STORM 100 cask system is classified as "important-to-safety" (ITS). This final safety analysis report (FSAR) explicitly recognizes the HI-STORM 100 System as an assemblage of equipment containing numerous ITS components. The reinforced concrete pad on which the cask is situated, however, is designated as a non-ITS structure. This is principally because, in most cases, cask systems for storing spent nuclear fuel on reinforced concrete pads are installed as free-standing structures. The lack of a physical connection between the cask and the pad permits the latter to be designated as not important-to-safety.

However, if the ZPAs at the surface of an ISFSI pad exceed the threshold limit for free-standing HI-STORM installation set forth in ~~the CoC~~*this FSAR*, then the cask must be installed in an anchored configuration (HI-STORM 100A).

In contrast to an ISFSI containing free-standing casks, a constrained-cask installation relies on the structural capacity of the pad to ensure structural safety. The Part 72 regulation require consideration of natural phenomenon in the design. Since an ISFSI pad, in an anchored cask installation, participates in maintaining the stability of the cask during "natural phenomena" on the cask and pad, it is an ITS structure. The procedure suggested in Regulatory Guide 7.10 [2.0.4] and the associated

NUREG [2.0.5] indicates that an ISFSI pad used to secure anchored casks should be classified as a Category C ITS structure.

Because tipover of a cask installed in an anchored configuration is not feasible, the pad does not need to be engineered to accommodate this non-mechanistic event. However, the permissible carry height for a loaded HI-STORM 100A overpack must be established for the specific ISFSI pad using the methodology described in this FSAR, if the load handling device is not designed in accordance with ANSI N 14.6 and does not have redundant drop protection design features. These requirements are specified in the CoC. However, to serve as an effective and reliable anchor, the pad must be made appropriately stiff and suitably secured to preclude pad uplift during a seismic event.

Because the geological conditions vary widely across the United States, it is not possible to, a'priori, define the detailed design of the pad. Accordingly, in this FSAR, the limiting requirements on the design and installation of the pad are provided. The user of the HI-STORM 100A System bears the responsibility to ensure that all requirements on the pad set forth in this FSAR are fulfilled by the pad design. Specifically, the ISFSI owner must ensure that:

- The pad design complies with the structural provisions of this report. In particular, the requirements of ACI-349-97 [2.0.2] with respect to embedments must be assured.
- The material of construction of the pad (viz., the additives used in the pad concrete), and the attachment system are compatible with the ambient environment at the ISFSI site.
- The pad is designed and constructed in accordance with a Part 72, Subpart G-compliant QA program.
- The design and manufacturing of the cask attachment system are consistent with the provisions of this report.
- Evaluations are performed (e.g., per 72.212) to demonstrate that the seismic and other inertial loadings at the site are enveloped by the respective bounding loadings defined in this report.

A complete listing of design and construction requirements for an ISFSI pad on which an anchored HI-STORM 100A will be deployed is provided in Appendix 2.A. A sample embedment design is depicted in Figure 2.A.1.

2.0.4.2 Applicable Codes

Factored load combinations for ISFSI pad design are provided in NUREG-1536 [2.1.5], which is consistent with ACI-349-85. The factored loads applicable to the pad design consist of dead weight of the cask, thermal gradient loads, impact loads arising from handling and accident events, external missiles, and bounding environmental phenomena (such as earthquakes, wind, tornado, and flood). Codes ACI 360R-92, "Design of Slabs on Grade"; ACI 302.1R, "Guide for Concrete Floor and Slab Construction";, and ACI 224R-90, "Control of Cracking in Concrete Structures" should be used in the design and construction of the concrete pad, as applicable. The embedment design for the HI-

STORM 100A (and 100SA) are the responsibility of the ISFSI owner and shall comply with Appendix B to ACI-349-97 as described in Appendix 2.A. A later Code edition may be used provided a written reconciliation is performed.

The factored load combinations presented in Table 3-1 of NUREG 1536 are reduced in the following to a bounding set of load combinations that are applied to demonstrate adherence to its acceptance criteria.

a. Definitions

D = dead load including the loading due to pre-stress in the anchor studs
L = live load
W = wind load
W_t = tornado load
T = thermal load
F = hydrological load
E = DBE seismic load
A = accident load
H = lateral soil pressure
T_a = accident thermal load
U_c = reinforced concrete available strength

Note that in the context of a complete ISFSI design, the DBE seismic load includes both the inertia load on the pad due to its self mass plus the interface loads transmitted to the pad to resist the inertia loads on the cask due to the loaded cask self mass. It is only these interface loads that are provided herein for possible use in the ISFSI structural analyses. The inertia load associated with the seismic excitation of the self mass of the slab needs to be considered in the ISFSI owner's assessment of overall ISFSI system stability in the presence of large uplift, overturning, and sliding forces at the base of the ISFSI pad. Such considerations are site specific and thus beyond the purview of this document.

b. Load Combinations for the Concrete Pad

The notation and acceptance criteria of NUREG-1536 apply.

Normal Events

$U_c > 1.4D + 1.7L$

$U_c > 1.4D + 1.7\ (L+H)$

Off-Normal Events

$U_c > 1.05D + 1.275\ (L+H+T)$
$U_c > 1.05D + 1.275\ (L+H+T+W)$

Accident-Level Events

$U_c > D+L+H+T+F$

$U_c > D+L+H+T_a$

$U_c > D+L+H+T+E$

$U_c > D+L+H+T+W_t$

$U_c > D+L+H+T+A$

In all of the above load combinations, the loaded cask weight is considered as a live load L on the pad. The structural analyses presented in Chapter 3 provide the interface loads contributing to "E", "F" and "W_t", which, for high-seismic sites, are the most significant loadings. The above set of load combinations can be reduced to a more limited set by recognizing that the thermal loads acting on the ISFSI slab are small because of the low decay heat loads from the cask. In addition, standard construction practices for slabs serve to ensure that extreme fluctuations in environmental temperatures are accommodated without extraordinary design measures. Therefore, all thermal loads are eliminated in the above combinations. Likewise, lateral soil pressure load "H" will also be bounded by "F" (hydrological) and "E" (earthquake) loads. Accident loads "A", resulting from a tipover, have no significance for an anchored cask. The following three load combinations are therefore deemed sufficient for structural qualification of the ISFSI slab supporting an anchored cask system.

Normal Events

$U_c > 1.4D + 1.7\ (L)$

Off-Normal Events

$U_c > 1.05D + 1.275\ (L+F)$

Accident-Level Events

$U_c > D+L+E$ (or W_t)

c. Load Combination for the Anchor Studs

The attachment bolts are considered to be governed by the ASME Code, Section III, Subsection NF and Appendix F [2.0.7]. Therefore, applicable load combinations and allowable stress limits for the attachment bolts are as follows:

Event Class and Load Combination	Governing ASME Code Section III Article for Stress Limits
Normal Events D	NF-3322.1, 3324.6
Off-Normal Events D+F	NF-3322.1, 3324.6 with all stress limits increased by 1.33
Accident-Level Events D+E and D+W_t	Appendix F, Section F-1334, 1335

2.0.4.3 Limiting Design Parameters

Since the loaded HI-STORM overpack will be carried over the pad, the permissible lift height for the cask must be determined site-specifically to ensure the integrity of the storage system in the event of a handling accident (uncontrolled lowering of the load). To determine the acceptable lift height, it is necessary to set down the limiting ISFSI design parameters. The limiting design parameters for an anchored cask ISFSI pad and the anchor studs, as applicable, are tabulated in Table 2.0.4. The design of steel embedments in reinforced concrete structures is governed by Appendix B of ACI-349-97. Section B.5 in that appendix states that "anchorage design shall be controlled by the strength of embedment steel...". Therefore, limits on the strength of embedment steel and on the anchor studs must be set down not only for the purposes of quantifying structural margins for the design basis load combinations, but also for the use of the ISFSI pad designer to establish the appropriate embedment anchorage in the ISFSI pad. The anchored cask pad design parameters presented in Table 2.0.4 allow for a much stiffer pad than the pad for free-standing HI-STORMs (Table 2.2.9). This increased stiffness has the effect of reducing the allowable lift height. However, a lift height for a loaded HI-STORM 100 cask (free-standing or anchored) is not required to be established if the cask is being lifted with a lift device designed in accordance with ANSI N14.6 having redundant drop protection design features.

In summary, the requirements for the ISFSI pad for free-standing and anchored HI-STORM deployment are similar with a few differences. Table 2.0.5 summarizes their commonality and differences in a succinct manner with the basis for the difference fully explained. ~~The CoC provides the specific requirements for ISFSI pad design and establishing lift height limits.~~

2.0.4.4 Anchored Cask/ISFSI Interface

The contact surface between the baseplate of overpack and the top surface of the ISFSI pad defines the structural interface between the HI-STORM overpack and the ISFSI pad. When HI-STORM is deployed in an anchored configuration, the structural interface also includes the surface where the nuts on the anchor studs bear upon the sector lugs on the overpack baseplate. The anchor studs and their fastening arrangements into the ISFSI pad are outside of the structural boundary of the storage cask. While the details of the ISFSI pad design for the anchored configuration, like that for the free-standing geometry, must be custom engineered for each site, certain design and acceptance criteria are specified herein (Appendix 2.A) to ensure that the design and construction of the pad fully comports with the structural requirements of the HI-STORM System.

Table 2.0.1
MPC DESIGN CRITERIA SUMMARY

Type	Criteria	Basis	FSAR Reference
Design Life:			
Design	40 yrs.	-	Table 1.2.2
License	20 yrs.	10CFR72.42(a) and 10CFR72.236(g)	-
Structural:			
Design Codes:			
Enclosure Vessel	ASME Code, Section III, Subsection NB	10CFR72.24(c)(4)	Section 2.0.1
Fuel Basket	ASME Code, Section III, Subsection NG *for core supports (NG-1121)*	10CFR72.24(c)(4)	Section 2.0.1
MPC Fuel Basket Supports (Angled Plates)	*ASME Code, Section III, Subsection NG for internal structures (NG-1122)*	*10CFR72.24(c)(4)*	*Section 2.0.1*
MPC Lifting Points	ANSI N14.6/NUREG-0612	10CFR72.24(c)(4)	Section 1.2.1.4
Dead Weights[†]:			
Max. Loaded Canister (dry)	90,000 lb.	R.G. 3.61	Table 3.2.1
Empty Canister (dry)	42,000 lb. (MPC-24) 45,000 lb. (MPC-24E/EF) 39,000 lb. (MPC-68/68F/68FF) 36,000 lb. (MPC-32)	R.G. 3.61	Table 3.2.1
Design Cavity Pressures:			
Normal:	100 psig	ANSI/ANS 57.9	Section 2.2.1.3
Off-Normal:	~~100~~ *110* psig	ANSI/ANS 57.9	Section 2.2.2.1
Accident (Internal)	200 psig	ANSI/ANS 57.9	Section 2.2.3.8
Accident (External)	60 psig	ANSI/ANS 57.9	Sections 2.2.3.6 and 2.2.3.10

[†] Weights listed in this table are bounding weights. Actual weights will be less, and will vary based on as-built dimensions of the components, fuel type, and the presence of fuel spacers and non-fuel hardware.

Table 2.0.1 (continued)
MPC DESIGN CRITERIA SUMMARY

Type	Criteria	Basis	FSAR Reference
Response and Degradation Limits	SNF assemblies confined in dry, inert environment	10CFR72.122(h)(l)	Section 2.0.1
Thermal:			
Maximum Design Temperatures:			
Structural Materials:			
Stainless Steel (Normal)	725° F	ASME Code Section II, Part D	Table 2.2.3
Stainless Steel (Accident)	950° F	ASME Code Section II, Part D	Table 2.2.3
Neutron Poison:			
~~Boral~~ *Neutron Absorber* (normal)	800° F	See ~~Section~~*Table* 4.3.1 *and Section 1.2.1.3.1*	Table 2.2.3
~~Boral~~ *Neutron Absorber* (accident)	950° F	See ~~Section~~ *Table* 4.3.1 *and Section 1.2.1.3.1*	Table 2.2.3
~~PWR Fuel Cladding (Moderate/High Burnup Fuel):~~			
~~5-year cooled~~	~~691°/679°F~~	~~PNL 6189/Appendix 4.A~~	~~Section 4.3/Appendix 4.A~~
~~6-year cooled~~	~~676°/660°F~~	~~PNL 6189/Appendix 4.A~~	~~Section 4.3/Appendix 4.A~~
~~7-year cooled~~	~~635°/635°F~~	~~PNL 6189/Appendix 4.A~~	~~Section 4.3/Appendix 4.A~~
~~10-year cooled~~	~~625°/621°F~~	~~PNL 6189/Appendix 4.A~~	~~Section 4.3/Appendix 4.A~~
~~15-year cooled~~	~~614°/611°F~~	~~PNL 6189/Appendix 4.A~~	~~Section 4.3/Appendix 4.A~~
~~BWR Fuel Cladding (Moderate/High Burnup Fuel):~~			
~~5-year cooled~~	~~740°F~~	~~PNL 6189~~	~~Section 4.3/Appendix 4.A~~
~~6-year cooled~~	~~712°F~~	~~PNL 6189~~	~~Section 4.3/Appendix 4.A~~
~~7-year cooled~~	~~669°F~~	~~PNL 6189~~	~~Section 4. /Appendix 4.A 3~~
~~10-year cooled~~	~~658°F~~	~~PNL 6189~~	~~Section 4.3/Appendix 4.A~~
~~15-year cooled~~	~~646°F~~	~~PNL 6189~~	~~Section 4.3/Appendix 4.A~~

Table 2.0.1 (continued)
MPC DESIGN CRITERIA SUMMARY

Type	Criteria	Basis	FSAR Reference
Canister Drying	*≤ 3 torr for ≥ 30 minutes (VDS)* *≤ 21°F exiting the demoisturizer for ≥ 30 minutes or a dew point of the MPC exit gas ≤ 22.9°F for ≥ 30 minutes(FHD)*	*NUREG-1536, ISG-11*	*Section 4.5, Appendix 2.B*
Canister Backfill Gas	Helium	-	Section ~~12.3.3~~*4.4*
Canister Backfill	*Varies (see Table 1.2.2)*	Thermal Analysis	Section 4.~~3~~*4*
Fuel cladding temperature limit for long term storage conditions	*752 °F (400 °C)*	*ISG-11*	*Section 4.3*
Fuel cladding temperature limit for short term operating conditions (e.g., MPC drying)	*752 °F (400 °C), except certain MPCs containing all moderate burnup fuel (MBF) may use 1058°F (570°C) for MPC drying operations with additional fuel cladding stress analysis*	*ISG-11*	*Section 4.5*
~~Short Term Allowable~~ Fuel ~~C~~cladding ~~T~~temperature *limit for Off-Normal and Accident Events*	1058° F *(570 °C)*	~~PNL-4835~~*ISG-11*	Sections 2.0.1 and 4.3
Insolation	Protected by overpack or HI-TRAC	-	Section 4.3
Confinement:		10CFR72.128(a)(3) and 10CFR72.236(d) and (e)	
Closure Welds:			
Shell Seams and Shell-to-Baseplate	Full Penetration	-	Section 1.5 and Table 9.1.4
MPC Lid	Multi-pass Partial Penetration	10CFR72.236(e)	Section 1.5 and Table 9.1.4
MPC Closure Ring	Partial Penetration		
Port Covers	Partial Penetration		

Table 2.0.1 (continued)
MPC DESIGN CRITERIA SUMMARY

Type	Criteria	Basis	FSAR Reference
NDE:			
Shell Seams and Shell-to-Baseplate	100% RT or UT	-	Table 9.1.4
MPC Lid	Root Pass and Final Surface 100% PT; Volumetric Inspection or 100% Surface PT each 3/8" of weld depth	-	Chapter 8 and Table 9.1.4
Closure Ring	Root Pass (if more than one pass is required) and Final Surface 100% PT	-	Chapter 8 and Table 9.1.4
Port Covers	Root Pass (if more than one pass is required) and Final Surface 100% PT	-	Chapter 8 and Table 9.1.4
Leak Testing:			
Welds Tested	Shell seams, shell-to-baseplate, ~~MPC lid-to-shell, and port covers to MPC lid~~	-	Section *9.1*~~7.1 and Chapters 8, 9, and 12~~
Medium	Helium	-	Section *9.1*~~7.2 and Chapter 12~~
Max. Leak Rate	5×10^{-6} atm-cm^3/sec (helium)	-	*Section 9.1*~~Chapter 12 (TS)~~
Monitoring System	None	10CFR72.128(a)(1)	Section 2.3.2.1
~~Hydrostatic~~*Pressure* Testing:			
Minimum Test Pressure	125 psig *(hydrostatic)* *120 psig (pneumatic)* ~~(+3, -0 psig)~~	-	~~Chapters 8 and 9~~*Sections 8.1 and 9.1*
Welds Tested	MPC Lid-to-Shell, MPC Shell seams, MPC Shell-to-Baseplate	-	Sections 8.1 and 9.1
Medium	Water *or helium*	-	Section 8.1 and Chapter 9
Retrievability:			
Normal and Off-normal:	No Encroachment on Fuel	10CFR72.122(f),(h)(1), & (l)	Sections 3.4, 3.5, and 3.1.2

Table 2.0.1 (continued)
MPC DESIGN CRITERIA SUMMARY

Type	Criteria	Basis	FSAR Reference
Post (design basis) Accident	Assemblies or Exceeding Fuel Assembly Deceleration Limits		
Criticality:		10CFR72.124 & 10CFR72.236(c)	
Method of Control	Fixed Borated Neutron Absorber, Geometry, and Soluble Boron	-	Section 2.3.4
Min. ^{10}~~Boron~~ Loading *(Boral/METAMIC®)*	0.0267*/0.0223* g/cm^2 (MPC-24) 0.0372*/0.0310* g/cm^2 (MPC-68, MPC-68FF, MPC-24E,MPC-24EF, ~~and~~ MPC-32 *and MPC-32F*) 0.01 g/cm^2 (MPC-68F)	-	Sections 2.1.8 *and 6.1*
Minimum Soluble Boron	*Varies (s*~~See~~ *Tables 2.1.14 and 2.1.16)*~~CoC, Appendix A, LCO 3.3.1~~	Criticality Analysis	Sections *2.1.9 and* 6.1~~; CoC, Appendix B~~
Max. k_{eff}	0.95	-	Sections 6.1 and 2.3.4
Min. Burnup	0.0 GWd/MTU (fresh fuel)	-	Section 6.1
Radiation Protection/Shielding:		10CFR72.126, & 10CFR72.128(a)(2)	
MPC: (normal/off-normal/accident)			
MPC Closure	ALARA	10CFR20	Sections 10.1, 10.2, & 10.3
MPC Transfer	ALARA	10CFR20	Sections 10.1, 10.2, & 10.3
Exterior of Shielding: (normal/off-normal/accident)			
Transfer Mode Position	See Table 2.0.3	10CFR20	Section 5.1.1

Table 2.0.1 (continued)
MPC DESIGN CRITERIA SUMMARY

Type	Criteria	Basis	FSAR Reference
ISFSI Controlled Area Boundary	See Table 2.0.2	10CFR72.104 & 10CFR72.106	Section 5.1.1 and Chapter 10
Design Bases:		10CFR72.236(a)	
Spent Fuel Specification:			
Assemblies/Canister	Up to 24 (MPC-24, MPC-24E & MPC-24EF) Up to 32 (MPC-32 *and MPC-32F*) Up to 68 (MPC-68, MPC-68F, & MPC-68FF)	-	Table 1.2.1 *and Section 2.1.9*
Type of Cladding	~~Zircaloy~~ *ZR* and Stainless Steel*	-	~~Table 2.1.6~~*Section 2.1.9*
Fuel Condition	Intact, Damaged, and Debris*	-	Sections 2.1.2, *2.1.3, and 2.1.9*~~& Table 2.1.6~~
~~* See Appendix B to the CoC for specific fuel condition requirements.~~			
PWR Fuel Assemblies:			
Type/Configuration	Various	-	*Section 2.1.9*~~Table 2.1.3~~
Max. Burnup	68,200 MWD/MTU	-	~~CoC, Appendix B~~*Sections 2.1.9 and 6.2*
Max. Enrichment	Varies by fuel design	-	Table 2.1.3 *and Section 2.1.9*
Max. Decay Heat/~~Assembly~~*MPC*†: ~~(Regionalized fuel loading)~~	*38 kW*	-	*Section 4.0*
~~5-year cooled~~	~~1470 W (MPC-24)~~ ~~1540 W (MPC-24E)~~	~~———~~	~~Table 4.4.31~~

† *Section 2.1.9.1*~~The Approved Contents Section of Appendix B to the CoC provide~~ *describes* the decay heat limits per assembly

Table 2.0.1 (continued)
MPC DESIGN CRITERIA SUMMARY

Type	Criteria	Basis	FSAR Reference
	~~1132 W (MPC-32)~~		
~~6 year cooled~~	~~1470 W (MPC-24)~~ ~~1540 W (MPC-24E)~~ ~~1072 W (MPC-32)~~	~~———~~	~~Table 4.4.31~~
~~7 year cooled~~	~~1335 W (MPC-24)~~ ~~1395 (MPC-24E)~~ ~~993 (MPC-32)~~	-	~~Table 4.4.31~~
~~10 year cooled~~	~~1235 W (MPC-24)~~ ~~1290 W (MPC-24E)~~ ~~950 W (MPC-32)~~	~~———~~	~~Table 4.4.31~~
~~15 year cooled~~	~~1165 W (MPC-24)~~ ~~1215 W (MPC-24E)~~ ~~918 W (MPC-32)~~	~~———~~	~~Table 4.4.31~~
Minimum Cooling Time:	~~5~~ *3* years (Intact ~~Zr~~ *ZR* Clad Fuel) 8 years (Intact SS Clad Fuel)		~~CoC, Appendix B~~*Section 2.19*
Max. Fuel Assembly Weight: (including non-fuel hardware and DFC, as applicable)	1,680 lb.	-	~~Table 2.1.6~~*Section 2.1.9*
Max. Fuel Assembly Length: (Unirradiated Nominal)	176.8 in.	-	~~Table 2.1.6~~*Section 2.1.9*
Max. Fuel Assembly Width (Unirradiated Nominal)	8.54 in.	-	~~Table 2.1.6~~*Section 2.1.9*
~~Fuel Rod Fill Gas:~~			
~~Pressure (max.)~~	~~500 psig~~	~~———~~	~~Section 4.3 & Table 4.3.2~~
BWR Fuel Assemblies:			
Type	Various	-	~~Table 2.1.4~~*Sections 2.1.9 and 6.2*
Max. Burnup	~~59,900~~ *65,000* MWD/MTU	-	~~CoC, Appendix B~~*Section 2.1.9*
Max. Enrichment	Varies by fuel design	-	Section *2.1.9*~~6.1,~~ Table 2.1.4

Table 2.0.1 (continued)
MPC DESIGN CRITERIA SUMMARY

Type	Criteria	Basis	FSAR Reference
Max. Decay Heat/~~Assy~~*MPC*†. ~~(Regionalized Fuel Loading):~~	*35.5 kW*	-	*Section 4.0*
~~5 year cooled~~	~~501 W (MPC-68)~~	~~———~~	~~Table 4.4.31~~
~~6 year cooled~~	~~468 W (MPC-68)~~	~~———~~	~~Table 4.4.31~~
~~7 year cooled~~	~~419 W (MPC-68)~~	~~———~~	~~Table 4.4.31~~
~~10 year cooled~~	~~406 W (MPC-68)~~	~~———~~	~~Table 4.4.31~~
~~15 year cooled~~	~~392 W (MPC-68)~~	~~———~~	~~Table 4.4.31~~
Minimum Cooling Time:	~~5 yrs~~ *3 years (Intact ZR Clad Fuel)* *8 years (Intact SS Clad Fuel)*		~~CoC, Appendix B~~*Section 2.1.9*
Max. Fuel Assembly Weight:			
w/channels and DFC, as applicable	700 lb.	-	~~Table 2.1.6~~*Section 2.1.9*
Max. Fuel Assembly Length (Unirradiated Nominal)	176.5in.	-	~~Table 2.1.6~~*Section 2.1.9*
Max. Fuel Assembly Width (Unirradiated Nominal)	5.85 in.	-	~~Table 2.1.6~~*Section 2.1.9*
~~Fuel Rod Fill Gas:~~			
~~End of Life Hot Standby Pressure (max.)~~	~~147 psig~~	~~———~~	~~Table 4.3.5~~
Normal Design Event Conditions:		10CFR72.122(b)(1)	
Ambient Temperatures	See Tables 2.0.2 and 2.0.3	ANSI/ANS 57.9	Section 2.2.1.4
Handling:			Section 2.2.1.2
Handling Loads	115% of Dead Weight	CMAA #70	Section 2.2.1.2
Lifting Attachment Acceptance Criteria	1/10 Ultimate 1/6 Yield	NUREG-0612 ANSI N14.6	Section 3.4.3
Attachment/Component Interface Acceptance Criteria	1/3 Yield	Regulatory Guide 3.61	Section 3.4.3
Away from Attachment Acceptance Criteria	ASME Code Level A	ASME Code	Section 3.4.3

† ~~The Approved Contents Section of Appendix B to the CoC~~*Section 2.1.9.1* ~~provide~~ *describes* the decay heat limits per assembly.

Table 2.0.1 (continued)
MPC DESIGN CRITERIA SUMMARY

Type	Criteria	Basis	FSAR Reference
Wet/Dry Loading	Wet or Dry	-	Section 1.2.2.2
Transfer Orientation	Vertical	-	Section 1.2.2.2
Storage Orientation	Vertical	-	Section 1.2.2.2
Fuel Rod Rupture Releases:			
Source Term Release Fraction	1% ~~(2.5% for high burnup fuel)~~	NUREG-1536	Sections 2.2.1.3~~and 7.2~~
Fill Gases	100%	NUREG-1536	Sections 2.2.1.3~~and 7.2~~
Fission Gases	30%	NUREG-1536	Sections 2.2.1.3~~and 7.2~~
Snow and Ice	Protected by Overpack	ASCE 7-88	Section 2.2.1.6
Off-Normal Design Event Conditions:		10CFR72.122(b)(1)	
Ambient Temperature	See Tables 2.0.2 and 2.0.3	ANSI/ANS 57.9	Section 2.2.2.2
Leakage of One Seal	~~No Loss of Confinement~~ *N/A*	~~ANSI/ANS 57.9~~ *ISG-18*	Sections 2.2.2.4 *and 7.1*
Partial Blockage of Overpack Air Inlets	Two Air Inlets Blocked	-	Section 2.2.2.5
Source Term Release Fraction:			
Fuel Rod Failures	10% ~~(11.5% for high burnup fuel)~~	NUREG-1536	Sections 2.2.2.1~~and 7.2~~
Fill Gases	100%	NUREG-1536	Sections 2.2.2.1~~and 7.2~~
Fission Gases	30%	NUREG-1536	Sections 2.2.2.1~~and 7.2~~
Design-Basis (Postulated) Accident Design Events and Conditions:		10CFR72.24(d)(2) & 10CFR72.94	
Tip Over	See Table 2.0.2	-	Section 2.2.3.2
End Drop	See Table 2.0.2	-	Section 2.2.3.1
Side Drop	See Table 2.0.3	-	Section 2.2.3.1
Fire	See Tables 2.0.2 and 2.0.3	10CFR72.122(c)	Section 2.2.3.3
Fuel Rod Rupture Releases:			
Fuel Rod Failures (including non-fuel hardware)	100%	NUREG-1536	Sections 2.2.3.8~~and 7.3~~
Fill Gases	100%	NUREG-1536	Sections 2.2.3.8~~and 7.3~~
Fission Gases	30%	NUREG-1536	Sections 2.2.3.8~~and 7.3~~
Particulates & Volatiles	~~See Table 7.3.1~~ *N/A*	-	Sections 2.2.3.9~~and 7.3~~
Confinement Boundary Leakage	*None*~~7.5×10^{-6} atm-cm^3/sec~~	~~TS leak rate plus test~~	Sections 2.2.3.9 *and 7.1*~~and~~

Table 2.0.1 (continued)
MPC DESIGN CRITERIA SUMMARY

Type	Criteria	Basis	FSAR Reference
	~~(helium)~~	~~sensitivity~~*ISG-18*	~~7.3~~
Explosive Overpressure	60 psig (external)	10CFR72.122(c)	Section 2.2.3.10
Airflow Blockage:			
Vent Blockage	100% of Overpack Air Inlets Blocked	10CFR72.128(a)(4)	Section 2.2.3.13
Partial Blockage of MPC Basket Vent Holes	Crud Depth (Table 2.2.8)	ESEERCO Project EP91-29	Section 2.2.3.4
Design Basis Natural Phenomenon Design Events and Conditions:		10CFR72.92 & 10CFR72.122(b)(2)	
Flood Water Depth	125 ft.	ANSI/ANS 57.9	Section 2.2.3.6
Seismic	See Table 2.0.2	10CFR72.102(f)	Section 2.2.3.7
Wind	Protected by Overpack	ASCE-7-88	Section 2.2.3.5
Tornado & Missiles	Protected by Overpack	RG 1.76 & NUREG-0800	Section 2.2.3.5
Burial Under Debris	Maximum Decay Heat Load	-	Section 2.2.3.12
Lightning	See Table 2.0.2	NFPA 78	Section 2.2.3.11
Extreme Environmental Temperature	See Table 2.0.2	-	Section 2.2.3.14

Table 2.0.2
HI-STORM OVERPACK DESIGN CRITERIA SUMMARY

Type	Criteria	Basis	FSAR Reference
Design Life:			
Design	40 yrs.	-	Section 2.0.2
License	20 yrs.	10CFR72.42(a) & 10CFR72.236(g)	
Structural:			
Design & Fabrication Codes:			
Concrete			
Design	ACI 349 as specified in Appendix 1.D	10CFR72.24(c)(4)	Section 2.0.2 and Appendix 1.D
Fabrication	ACI 349 as specified in Appendix 1.D	10CFR72.24(c)(4)	Section 2.0.2 and Appendix 1.D
Compressive Strength	ACI 318-95 as specified in Appendix 1.D	10CFR72.24(c)(4)	Section 2.0.2 and Appendix 1.D
Structural Steel			
Design	ASME Code Section III, Subsection NF	10CFR72.24(c)(4)	Section 2.0.2
Fabrication	ASME Code Section III, Subsection NF	10CFR72.24(c)(4)	Section 2.0.2
Dead Weights[†]:			
Max. Loaded MPC (Dry)	88,135 lb. (MPC-32)	R.G. 3.61	Table 3.2.1
Max. Empty Overpack Assembled with Top Lid	270,000 lb.	R.G. 3.61	Table 3.2.1
Max. MPC/Overpack	360,000 lb.	R.G. 3.61	Table 3.2.1
Design Cavity Pressures	N/A	-	Section 2.2.1.3
Response and Degradation Limits	Protect MPC from deformation	10CFR72.122(b) 10CFR72.122(c)	Sections 2.0.2 and 3.1

[†] Weights listed in this table are bounding weights. Actual weights will be less, and will vary based on as-built dimensions of the components, fuel type, and the presence of fuel spacers and non-fuel hardware, as applicable.

Table 2.0.2 (continued)
HI-STORM 100 OVERPACK DESIGN CRITERIA SUMMARY

Type	Criteria	Basis	FSAR Reference
	Continued adequate performance of overpack	10CFR72.122(b) 10CFR72.122(c)	
	Retrieval of MPC	10CFR72.122(l)	
Thermal:			
Maximum Design Temperatures:			
Concrete			
~~Local Maximum~~ *Section Average* (Normal)	~~2~~300° F	~~ACI 349 Appendix A~~*NUREG-1536*	*Section 2.0.2 and* Tables *1.D.1 and* 2.2.3
~~Local Maximum~~ *Section Average* (Accident)	350° F	ACI 349 Appendix A	*Section 2.0.2 and* Tables *1.D.1 and* -2.2.3
Steel Structure	~~3~~450° F	ASME Code Section II, Part D	Table 2.2.3
Insolation:	Averaged Over 24 Hours	10CFR71.71	Section 4.4.1.1.8
Confinement:	None	10CFR72.128(a)(3) & 10CFR72.236(d) & (e)	N/A
Retrievability:			
Normal and Off-normal	No damage that precludes Retrieval of MPC or Exceeding Fuel Assembly Deceleration Limits	10CFR72.122(f),(h)(1), & (l)	Sections 3.5 and 3.4
Accident			Sections 3.5 and 3.4
Criticality:	Protection of MPC and Fuel Assemblies	10CFR72.124 & 10CFR72.236(c)	Section 6.1
Radiation Protection/Shielding:		10CFR72.126 & 10CFR72.128(a)(2)	
Overpack (Normal/Off-normal/Accident)			
Surface	ALARA	10CFR20	Chapters 5 and 10
Position	ALARA	10CFR20	Chapters 5 and 10
Beyond Controlled Area During Normal Operation and Anticipated Occurrences	25 mrem/yr. to whole body 75 mrem/yr. to thyroid 25 mrem/yr. To any critical organ	10CFR72.104	Sections 5.1.1, 7.2, and 10.1

Table 2.0.2 (continued)
HI-STORM 100 OVERPACK DESIGN CRITERIA SUMMARY

Type	Criteria	Basis	FSAR Reference
At Controlled Area Boundary from Design Basis Accident	5 rem TEDE or sum of DDE and CDE to any individual organ or tissue (other than lens of eye) ≤ 50 rem. 15 rem lens dose. 50 rem shallow dose to skin or extremity.	10CFR72.106	Sections 5.1.2, 7.3, and 10.1
Design Bases:			
Spent Fuel Specification	See Table 2.0.1	10CFR72.236(a)	Section 2.1.9
Normal Design Event Conditions:		10CFR72.122(b)(1)	
Ambient Outside Temperatures:			
Max. Yearly Average	80° F	ANSI/ANS 57.9	Section 2.2.1.4
Live Load†:		ANSI/ANS 57.9	-
Loaded Transfer Cask (max.)	245,000 lb. (HI-TRAC 125 w/transfer lid)	R.G. 3.61	Table 3.2.2 Section 2.2.1.2
Dry Loaded MPC (max.)	90,000 lb.	R.G. 3.61	Table 3.2.1 and Section 2.2.1.2
Handling:			Section 2.2.1.2
Handling Loads	115% of Dead Weight	CMAA #70	Section 2.2.1.2
Lifting Attachment Acceptance Criteria	1/10 Ultimate 1/6 Yield ~~ANSI N14.6~~	NUREG-0612 ANSI N14.6	Section 3.4.3
Attachment/Component Interface Acceptance Criteria	1/3 Yield	Regulatory Guide 3.61	Section 3.4.3
Away from Attachment Acceptance Criteria	ASME Code Level A	ASME Code	Section 3.4.3
Minimum Temperature During Handling Operations	0° F	ANSI/ANS 57.9	Section 2.2.1.2
Snow and Ice Load	100 lb./ft^2	ASCE 7-88	Section 2.2.1.6

† Weights listed in this table are bounding weights. Actual weights will be less, and will vary based on as-built dimensions of the components, fuel type, and the presence of fuel spacers and non-fuel hardware, as applicable.

Table 2.0.2 (continued)
HI-STORM 100 OVERPACK DESIGN CRITERIA SUMMARY

Type	Criteria	Basis	FSAR Reference
Wet/Dry Loading	Dry	-	Section 1.2.2.2
Storage Orientation	Vertical	-	Section 1.2.2.2
Off-Normal Design Event Conditions:		10CFR72.122(b)(1)	
Ambient Temperature			
Minimum	-40° F	ANSI/ANS 57.9	Section 2.2.2.2
Maximum	100° F	ANSI/ANS 57.9	Section 2.2.2.2
Partial Blockage of Air Inlets	Two Air Inlet Ducts Blocked	-	Section 2.2.2.5
Design-Basis (Postulated) Accident Design Events and Conditions:		10CFR72.94	
Drop Cases:			
End	11 in.	-	Section 2.2.3.1
Tip-Over (Not applicable for HI-STORM 100A)	Assumed (Non-mechanistic)	-	Section 2.2.3.2
Fire:			
Duration	217 seconds	10CFR72.122(c)	Section 2.2.3.3
Temperature	1,475° F	10CFR72.122(c)	Section 2.2.3.3
Fuel Rod Rupture	See Table 2.0.1	-	Section 2.2.3.8
Air Flow Blockage:			
Vent Blockage	100% of Air Inlets Blocked	10CFR72.128(a)(4)	Section 2.2.3.13
Ambient Temperature	80° F	10CFR72.128(a)(4)	Section 2.2.3.13
Explosive Overpressure External Differential Pressure	10 psid instantaneous, 5 psid steady state	10 CFR 72.128(a)(4)	Table 2.2.1
Design-Basis Natural Phenomenon Design Events and Conditions:		10CFR72.92 & 10CFR72.122(b)(2)	
Flood			
Height	125 ft.	RG 1.59	Section 2.2.3.6
Velocity	15 ft/sec.	RG 1.59	Section 2.2.3.6
Seismic			

Table 2.0.2 (continued)
HI-STORM 100 OVERPACK DESIGN CRITERIA SUMMARY

Type	Criteria	Basis	FSAR Reference
Max. ~~ZPA~~ *acceleration* at top of ISFSI pad	Free Standing: $G_H + 0.53G_V \leq 0.53$ Anchored: $G_H \leq 2.12$, $G_V \leq 1.5$	10CFR72.102(f)	Section 3.4.7.1 Section 3.4.7.3
Tornado			
Wind			
Max. Wind Speed	360 mph	RG 1.76	Section 2.2.3.5
Pressure Drop	3.0 psi	RG 1.76	Section 2.2.3.5
Missiles			Section 2.2.3.5
Automobile			
Weight	1,800 kg	NUREG-0800	Table 2.2.5
Velocity	126 mph	NUREG-0800	Table 2.2.5
Rigid Solid Steel Cylinder			
Weight	125 kg	NUREG-0800	Table 2.2.5
Velocity	126 mph	NUREG-0800	Table 2.2.5
Diameter	8 in.	NUREG-0800	Table 2.2.5
Steel Sphere			
Weight	0.22 kg	NUREG-0800	Table 2.2.5
Velocity	126 mph	NUREG-0800	Table 2.2.5
Diameter	1 in.	NUREG-0800	Table 2.2.5
Burial Under Debris	Maximum Decay Heat Load	-	Section 2.2.3.12
Lightning	Resistance Heat-Up	NFPA 70 & 78	Section 2.2.3.11
Extreme Environmental Temperature	125° F	-	Section 2.2.3.14
Load Combinations:	See Table 2.2.14 and Table 3.1.5	ANSI/ANS 57.9 and NUREG-1536	Section 2.2.7

TABLE 2.0.3
HI-TRAC TRANSFER CASK DESIGN CRITERIA SUMMARY

Type	Criteria	Basis	FSAR Reference
Design Life:			
Design	40 yrs.	-	Section 2.0.3
License	20 yrs.	10CFR72.42(a) & 10CFR72.236(g)	
Structural:			
Design Codes:			
Structural Steel	ASME Code, Section III, Subsection NF	10CFR72.24(c)(4)	Section 2.0.3
Lifting Trunnions	NUREG-0612 & ANSI N14.6	10CFR72.24(c)(4)	Section 1.2.1.4
Dead Weights[†]:			
Max. Empty Cask:			
w/top lid and pool lid installed and water jacket filled	143,500 lb. (HI-TRAC 125) 102,000 lb. (HI-TRAC 100) 143,000 lb. (HI-TRAC 125D)	R.G. 3.61	Table 3.2.2
w/top lid and transfer lid installed and water jacket filled (N/A for HI-TRAC 125D)	155,000 lb. (HI-TRAC 125) 111,000 lb. (HI-TRAC 100)	R.G. 3.61	Table 3.2.2
Max. MPC/HI-TRAC with Yoke (in-pool lift):			
Water Jacket Empty	245,000 lb. (HI-TRAC 125 and 125D) 202,000 lb. (HI-TRAC 100)	R.G. 3.61	Table 3.2.4
Design Cavity Pressures:			
HI-TRAC Cavity	Hydrostatic	ANSI/ANS 57.9	Section 2.2.1.3
Water Jacket Cavity	60 psig (internal)	ANSI/ANS 57.9	Section 2.2.1.3
Response and Degradation Limits	Protect MPC from deformation	10CFR72.122(b) 10CFR72.122(c)	Section 2.0.3

[†] Weights listed in this table are bounding weights. Actual weights will be less, and will vary based on as-built dimensions of the components, fuel type, and the presence of fuel spacers and non-fuel hardware, as applicable.

TABLE 2.0.3 (continued)
HI-TRAC TRANSFER CASK DESIGN CRITERIA SUMMARY

Type	Criteria	Basis	FSAR Reference
	Continued adequate performance of HI-TRAC transfer cask	10CFR72.122(b) 10CFR72.122(c)	
	Retrieval of MPC	10CFR72.122(l)	
Thermal:			
Maximum Design Temperature			
Structural Materials	400° F	ASME Code Section II, Part D	Table 2.2.3
Shielding Materials			
Lead	350° F (max.)		Table 2.2.3
Liquid Neutron Shield	307° F (max.)	-	Table 2.2.3
Solid Neutron Shield	300° F (max.) *(long term)* *350°F (max.) (short term)*	~~Manufacturer~~*Test* Data	*Appendix 1.B and* Table 2.2.3
Insolation:	Averaged Over 24 Hours	10CFR71.71	Section 4.5.1.1.3
Confinement:	None	10CFR72.128(a)(3) & 10CFR72.236(d) & (e)	N/A
Retrievability:			
Normal and Off-normal	No encroachment on MPC or Exceeding Fuel Assembly Deceleration Limits	10CFR72.122(f),(h)(1), & (l)	Sections 3.5 & 3.4
After Design-basis (Postulated) Accident			Section 3.5 & 3.4
Criticality:	Protection of MPC and Fuel Assemblies	10CFR72.124 & 10CFR72.236(c)	Section 6.1
Radiation Protection/Shielding:		10CFR72.126 & 10CFR72.128(a)(2)	
Transfer Cask (Normal/Off-normal/Accident)			
Surface	ALARA	10CFR20	Chapters 5 and 10
Position	ALARA	10CFR20	Chapters 5 and 10
Design Bases:			
Spent Fuel Specification	See Table 2.0.1	10CFR72.236(a)	Section 2.1
Normal Design Event Conditions:		10CFR72.122(b)(1)	
Ambient Temperatures:			
Lifetime Average	100° F	ANSI/ANS 57.9	Section 2.2.1.4

TABLE 2.0.3 (continued)
HI-TRAC TRANSFER CASK DESIGN CRITERIA SUMMARY

Type	Criteria	Basis	FSAR Reference
Live Load†			
Max. Loaded Canister			
Dry	90,000 lb.	R.G. 3.61	Table 3.2.1
Wet (including water in HI-TRAC annulus)	106,570 lb.	R.G. 3.61	Table 3.2.4
Handling:			Section 2.2.1.2
Handling Loads	115% of Dead Weight	CMAA #70	Section 2.2.1.2
Lifting Attachment Acceptance Criteria	1/10 Ultimate 1/6 Yield	NUREG-0612 ANSI N14.6	Section 3.4.3
Attachment/Component Interface Acceptance Criteria	1/3 Yield	Regulatory Guide 3.61	Section 3.4.3
Away from Attachment Acceptance Criteria	ASME Code Level A	ASME Code	Section 3.4.3
Minimum Temperature for Handling Operations	0° F	ANSI/ANS 57.9	Section 2.2.1.2
Wet/Dry Loading	Wet or Dry	-	Section 1.2.2.2
Transfer Orientation	Vertical	-	Section 1.2.2.2
Test Loads:			
Trunnions	300% of vertical design load	NUREG-0612 & ANSI N14.6	Section 9.1.2.1
Off-Normal Design Event Conditions:		10CFR72.122(b)(1)	
Ambient Temperature			
Minimum	0° F	ANSI/ANS 57.9	Section 2.2.2.2
Maximum	100° F	ANSI/ANS 57.9	Section 2.2.2.2
Design-Basis (Postulated) Accident Design Events and Conditions:		10CFR72.24(d)(2) & 10CFR72.94	
Side Drop	42 in.	-	Section 2.2.3.1
Fire			
Duration	4.8 minutes	10CFR72.122(c)	Section 2.2.3.3
Temperature	1,475° F	10CFR72.122(c)	Section 2.2.3.3

† Weights listed in this table are bounding weights. Actual weights will be less, and will vary based on as-built dimensions of the components, fuel type, and the presence of fuel spacers and non-fuel hardware, as applicable.

TABLE 2.0.3 (continued)
HI-TRAC TRANSFER CASK DESIGN CRITERIA SUMMARY

Type	Criteria	Basis	FSAR Reference
Fuel Rod Rupture	See Table 2.0.1		Section 2.2.3.8
Design-Basis Natural Phenomenon Design Events and Conditions:		10CFR72.92 & 10CFR72.122(b)(2)	
Missiles			Section 2.2.3.5
Automobile			
Weight	1800 kg	NUREG-0800	Table 2.2.5
Velocity	126 mph	NUREG-0800	Table 2.2.5
Rigid Solid Steel Cylinder			
Weight	125 kg	NUREG-0800	Table 2.2.5
Velocity	126 mph	NUREG-0800	Table 2.2.5
Diameter	8 in.	NUREG-0800	Table 2.2.5
Steel Sphere			
Weight	0.22 kg	NUREG-0800	Table 2.2.5
Velocity	126 mph	NUREG-0800	Table 2.2.5
Diameter	1 in.	NUREG-0800	Table 2.2.5
Load Combinations:	See Table 2.2.14 and Table 3.1.5	ANSI/ANS-57.9 & NUREG-1536	Section 2.2.7

TABLE 2.0.4
LIMITING DESIGN PARAMETERS FOR ISFSI PADS AND ANCHOR STUDS FOR HI-STORM 100A

Item	Maximum Permitted Value†	Minimum Permitted Value
ISFSI PAD		
Pad Thickness	---	48 inches
Subgrade Young's Modulus from Static Tests (needed if pad is not founded on rock)	---	10,000 psi
Concrete compressive strength at 28 days	---	4,000 psi
ANCHOR STUDS		
Yield Strength at Ambient Temperature	None	80,000 psi
Ultimate Strength at Ambient Temperature	None	125,000 psi
Initial Stud Tension	65 ksi	55 ksi

† Pad and anchor stud parameters to be determined site-specifically, except where noted.

TABLE 2.0.5
ISFSI PAD REQUIREMENTS FOR FREE-STANDING AND ANCHORED HI-STORM INSTALLATION

Item	Free-Standing	Anchored	Comments
1. Interface between cask and ISFSI	Contact surface between cask and top surface of ISFSI pad	Same as free-standing with the addition of the bearing surface between the anchor stud nut and the overpack baseplate. (The interface between the anchor stud and the anchor receptacle is at the applicable threaded or bearing surface).	All components below the top surface of the ISFSI pad and in contact with the pad concrete are part of the pad design. A non-integral component such as the anchor stud is not part of the embedment even though it may be put in place when the ISFSI pad is formed. The embedment for the load transfer from the anchor studs to the concrete ISFSI pad shall be exclusively cast-in-place.
2. Applicable ACI Code	At the discretion of the ISFSI owner. ACI-318 and ACI-349 are available candidate codes.	ACI-349-97. A later edition of this Code may be used if a written reconciliation is performed.	ACI-349-97 recognizes increased structural role of the ISFSI pad in an anchored cask storage configuration and imposes requirements on embedment design.
3. Limitations on the pad design parameters	Per Table 2.2.9	Per Table 2.0.4	In free-standing cask storage, the non-mechanistic tipover requirement limits the stiffness of the pad. In the anchored storage configuration, increased pad stiffness is permitted; however, the permissible HI-STORM carry height is reduced.
4. HI-STORM Carry Height	11 inches (for ISFSI pad parameter Set A or Set B) or, otherwise, site-specific. Not applicable if the cask is lifted with a device designed in accordance with ANSI N14.6 and having redundant drop protection features.	Determined site-specifically. Not applicable if the cask is lifted with a device designed in accordance with ANSI N14.6 and having redundant drop protection features.	Appendix 3.A provides the technical basis for free-standing installation. Depending on the final ISFSI pad configuration (thickness, concrete strength, subgrade,etc.), and the method of transport, an allowable carry height may need to be established.

TABLE 2.0.5 (continued)
ISFSI PAD REQUIREMENTS FOR FREE-STANDING AND ANCHORED HI-STORM INSTALLATION

Item	*Free-Standing*	*Anchored*	*Comments*
5. Maximum seismic input on the pad/cask contact surface. G_H is the vectorial sum of the two horizontal ZPAs and G_V is the vertical ZPA	$G_H + \mu G_V \leq \mu$	$G_H \leq 2.12$ AND $G_V \leq 1.5$	
6. Required minimum value of cask to pad static coefficient of friction (μ, must be confirmed by testing).	Greater than or equal to 0.53 (per Table 2.2.9).	Same as that for free-standing condition	
7. Applicable Wind and Large Missile Loads	Per Table 2.2.4, missile and wind loading different from the tabulated values, require 10CFR 72.48 evaluation	The maximum overturning moment at the base of the cask due to lateral missile and/or wind action must be less than 1×10^7 ft-lb.	The bases are provided in Section 3.4.8 for free-standing casks; the limit for anchored casks ensures that the anchorage system will have the same structural margins established for seismic loading.
8. Small and medium missiles (penetrant missile)	Per Table 2.2.5, missiles and wind loading different from the tabulated value, require 10CFR 72.48 evaluation.	Same as for free-standing cask construction.	
9. Design Loadings for the ISFSI Pad	Per load combinations in Section 2.0.4 using site-specific load.	Same as for free-standing cask.	

2.1 SPENT FUEL TO BE STORED

2.1.1 Determination of The Design Basis Fuel

The HI-STORM 100 System is designed to store most types of fuel assemblies generated in the commercial U.S. nuclear industry. Boiling-water reactor (BWR) fuel assemblies have been supplied by The General Electric Company (GE), Siemens, Exxon Nuclear, ANF, UNC, ABB Combustion Engineering, and Gulf Atomic. Pressurized-water reactor (PWR) fuel assemblies are generally supplied by Westinghouse, Babcock & Wilcox, ANF, and ABB Combustion Engineering. ANF, Exxon, and Siemens are historically the same manufacturing company under different ownership. Within this report, SPC is used to designate fuel manufactured by ANF, Exxon, or Siemens. Publications such as Refs. [2.1.1] and [2.1.2] provide a comprehensive description of fuel discharged from U.S. reactors. A central object in the design of the HI-STORM 100 System is to ensure that a majority of SNF discharged from the U.S. reactors can be stored in one of the MPCs.

The cell openings and lengths in the fuel basket have been sized to accommodate the BWR and PWR assemblies listed in Refs. [2.1.1] and [2.1.2] except as noted below. Similarly, the cavity length of the multi-purpose canisters has been set at a dimension which permits storing most types of PWR fuel assemblies and BWR fuel assemblies with or without fuel channels. The one exception is as follows:

i. The South Texas Units 1 & 2 SNF, and CE 16x16 System 80 SNF are too long to be accommodated in the available MPC cavity length.

In addition to satisfying the cross sectional and length compatibility, the active fuel region of the SNF must be enveloped in the axial direction by the neutron absorber located in the MPC fuel basket. Alignment of the neutron absorber with the active fuel region is ensured by the use of upper and lower fuel spacers suitably designed to support the bottom and restrain the top of the fuel assembly. The spacers axially position the SNF assembly such that its active fuel region is properly aligned with the neutron absorber in the fuel basket. Figure 2.1.5 provides a pictorial representation of the fuel spacers positioning the fuel assembly active fuel region. Both the upper and lower fuel spacers are designed to perform their function under normal, off-normal, and accident conditions of storage.

In summary, the geometric compatibility of the SNF with the MPC designs does not require the definition of a design basis fuel assembly. This, however, is not the case for structural, confinement, shielding, thermal-hydraulic, and criticality criteria. In fact, a particular fuel type in a category (PWR or BWR) may not control the cask design in all of the above-mentioned criteria. To ensure that no SNF listed in Refs. [2.1.1] and [2.1.2] which is geometrically admissible in the MPC is precluded, it is necessary to determine the governing fuel specification for each analysis criterion. To make the necessary determinations, potential candidate fuel assemblies for each qualification criterion were considered. Table 2.1.1 lists the PWR fuel assemblies that were evaluated. These fuel assemblies were evaluated to define the governing design criteria for PWR fuel. The BWR fuel assembly designs evaluated are listed in Table 2.1.2. Tables 2.1.3 and 2.1.4 provide the fuel characteristics determined to be acceptable for storage in the HI-STORM 100 System. *Section 2.1.9 summarizes the authorized contents for the HI-STORM 100 System.* Any fuel assembly that has fuel

characteristics within the range of Tables 2.1.3 and 2.1.4 *and meets the other limits specified in Section 2.1.9* is acceptable for storage in the HI-STORM 100 System. ~~These t~~*T*ables *2.1.3 and 2.1.4* present the groups of fuel assembly types defined as "array/classes" as described in further detail in Chapter 6. Table 2.1.5 lists the BWR and PWR fuel assembly designs which are found to govern for three qualification criteria, namely reactivity, shielding, and ~~decay heat generation~~*thermal.* Substantiating results of analyses for the governing assembly types are presented in the respective chapters dealing with the specific qualification topic. Additional information on the design basis fuel definition is presented in the following subsections.

2.1.2 Intact SNF Specifications

Intact fuel assemblies are defined as fuel assemblies without known or suspected cladding defects greater than pinhole leaks and hairline cracks, and which can be handled by normal means. The design payload for the HI-STORM 100 System is intact ~~ZircaloyZR~~ *or stainless steel (SS)* clad fuel assemblies with the characteristics listed in Tables 2.1.~~6~~*17 through 2.1.24.* ~~or intact stainless steel clad fuel assemblies with the characteristics listed in Table 2.1.8. The placement of a single stainless steel clad fuel assembly in a MPC necessitates that all fuel assemblies (stainless steel clad or ZircaloyZR clad) stored in that MPC meet the maximum heat generation requirements for stainless steel clad fuel specified in Table 2.1.8. Intact BWR MOX fuel assemblies shall meet the requirements of Table 2.1.7.~~

Intact fuel assemblies without fuel rods in fuel rod locations cannot be loaded into the HI-STORM 100 unless dummy fuel rods, which occupy a volume greater than or equal to the original fuel rods, replace the missing rods prior to loading. Any intact fuel assembly that falls within the geometric, thermal, and nuclear limits established for the design basis intact fuel assembly, as defined in ~~the Approved Contents section of Appendix B to the CoC~~*Section 2.1.9* can be safely stored in the HI-STORM 100 System.

The range of fuel characteristics specified in Tables 2.1.3 and 2.1.4 have been evaluated in this FSAR and are acceptable for storage in the HI-STORM 100 System *within the decay heat, burnup, and cooling time limits specified in Section 2.1.9 for intact fuel assemblies.*

2.1.3 Damaged SNF and Fuel Debris Specifications

Damaged fuel and fuel debris are defined in Table 1.0.1.

To aid in loading and unloading, damaged fuel assemblies and fuel debris will be loaded into stainless steel damaged fuel containers (DFCs) provided with 250 x 250 fine mesh screens, for storage in the HI-STORM 100 System *(see Figures 2.1.1 and 2.1.2B, C, and D).* The MPC-24E *and MPC 32* ~~is~~ *are* designed to accommodate PWR damaged fuel. The MPC-24EF *and MPC-32F* ~~is~~ *are* designed to accommodate PWR damaged fuel and fuel debris. The MPC-68 is designed to accommodate BWR damaged fuel. The MPC-68F and MPC-68FF are designed to accommodate BWR damaged fuel and fuel debris. The appropriate structural, thermal, shielding, criticality, and confinement analyses have been performed to account for damaged fuel and fuel debris and are described in their respective chapters that follow. The limiting design characteristics for damaged fuel assemblies ~~authorized for loading in the HI-STORM 100 System are provided in Table~~

~~2.1.7.~~*and* ~~R~~restrictions on the number and location of damaged fuel containers authorized for loading in each MPC model are provided in *Section 2.1.9.*~~the Approved Contents section of Appendix B to the CoC.~~ Dresden Unit 1 fuel assemblies contained in Transnuclear-designed damaged fuel canisters and one Dresden Unit 1 thoria rod canister have been approved for storage directly in the HI-STORM 100 System without re-packaging (see Figures 2.1.2 and 2.1.2A).

MPC contents classified as fuel debris are required to be stored in DFCs and in the applicable "F" model MPC as specified in Section 2.1.9. The "F"(or "FF") indicates the MPC is qualified for storage of intact fuel, damaged fuel, and fuel debris, in quantities and locations specified in Section 2.1.9. The basket designs for the standard and "F" model MPCs are identical. The lid and shell designs of the "F" models are unique in that the upper shell portion of the canister is thickened for additional strength needed under hypothetical accident conditions of transportation under 10 CFR 71. This design feature is not required for dry storage, but must be considered in fuel loading for dry storage to ensure the dual purpose function of the MPC by eliminating the need to re-package the fuel for transportation. Figure 2.1.9 shows the details of the differences between the standard and "F" model MPC shells. These details are common for both the PWR and BWR series MPC models.

2.1.4 Deleted

2.1.5 Structural Parameters for Design Basis SNF

The main physical parameters of an SNF assembly applicable to the structural evaluation are the fuel assembly length, envelope (cross sectional dimensions), and weight. These parameters, which define the mechanical and structural design, are ~~listed in Tables 2.1.6, 2.1.7, and 2.1.8~~*specified in Section 2.1.9*. The centers of gravity reported in Section 3.2 are based on the maximum fuel assembly weight. Upper and lower fuel spacers (as appropriate) maintain the axial position of the fuel assembly within the MPC basket and, therefore, the location of the center of gravity. The upper and lower fuel spacers are designed to withstand normal, off-normal, and accident conditions of storage. An axial clearance of approximately 2 inches is provided to account for the irradiation and thermal growth of the fuel assemblies. The suggested upper and lower fuel spacer lengths are listed in Tables 2.1.9 and 2.1.10. In order to qualify for storage in the MPC, the SNF must satisfy the physical parameters listed in ~~Tables 2.1.6, 2.1.7, or 2.1.8~~*Section 2.1.9.*

2.1.6 Thermal Parameters for Design Basis SNF

The principal thermal design parameter for the stored fuel is the peak fuel cladding temperature, which is a function of the maximum heat generation rate per assembly~~, the allowable fuel cladding temperature based on cooling time,~~ and the decay heat removal capabilities of the HI-STORM 100 System. *No attempt is made to link the maximum allowable decay heat per fuel assembly with burnup, enrichment, or cooling time. Rather, the decay heat per fuel assembly is adjusted to yield peak fuel cladding temperatures with an allowance for margin to the temperature limit. The same fuel assembly decay heats are used for all fuel assembly designs within a given class of fuel assemblies (i.e., ZR clad PWR, stainless steel clad BWR, etc.).*~~The maximum heat generation rate per assembly for the design basis fuel assembly is based on the fuel assembly type with the highest decay heat for a given enrichment, burnup, and cooling time. This decay heat design basis fuel~~

~~assembly is listed in Table 2.1.5. Section 5.2 describes the method used to determine the design basis fuel assembly type and calculate the decay heat load.~~

To ensure the permissible fuel cladding temperature limits are not exceeded, ~~the Approved Contents section of Appendix B to the CoC~~*Section 2.1.9* specifies the allowable decay heat per assembly for each MPC model. For both uniform and regionalized loading of moderate and high burnup ~~Zircaloy clad~~ fuel assemblies, the allowable decay heat per assembly ~~is a function of cooling time and~~ is presented in ~~Appendix B to the CoC~~*Section 2.1.9*. ~~in Tables 2.1-5 and 2.1-7. For stainless steel clad fuel assemblies, the allowable decay heat per assembly is not dependent upon cooling time and is specified in Table 2.1-1 of Appendix B to the CoC. Due to the large conservatisms in the thermal evaluations and the relatively long cooling times and corresponding low decay heats for stainless steel clad fuel, an age-dependent allowable decay heat limit is not necessary.~~

~~The specified decay heat load can be attained by varying burnups and cooling times. The Approved Contents section of Appendix B to the CoC provides the burnup and cooling time limits for intact Zircaloy~~*ZR* ~~clad fuel to meet the thermal requirements for the various MPC's.~~

~~The Approved Contents section of Appendix B to the CoC~~*Section 2.1.9* also includes separate cooling time, burnup, and decay heat limits for uniform fuel loading and regionalized fuel loading. Regionalized loading allows higher heat emitting fuel assemblies to be stored in the center fuel storage locations than would otherwise be authorized for storage under uniform loading conditions.

The fuel cladding temperature is also affected by *the heat transfer characteristics of the fuel assemblies. There is no single fuel assembly design used in all thermal calculations that is bounding of all others. Instead, each thermal calculation, comprising the overall thermal analysis presented in Chapter 4, was performed using the fuel assembly design that results in the most conservative result for the individual calculation. By always using the fuel assembly design that is most conservative for a particular calculation, it is ensured that each calculation is bounding for all fuel assembly designs. The bounding fuel assembly design for each thermal calculation and fuel type is provided in Table 2.1.5.* ~~other factors. A governing geometry that maximizes the impedance to the transmission of heat out of the fuel rods has been defined. The governing thermal parameters to ensure that the range of SNF discussed previously are bounded by the thermal analysis are discussed in detail and specified in Chapter 4. By utilizing these bounding thermal parameters, the calculated peak fuel rod cladding temperatures are conservative for actual spent fuel assemblies which have greater thermal conductivities.~~

Finally, the axial variation in the heat generation rate in the design basis fuel assembly is defined based on the axial burnup distribution. For this purpose, the data provided in Refs. [2.1.7] and [2.1.8] are utilized and summarized in Table 2.1.11 and Figures 2.1.3 and 2.1.4 for reference. These distributions are representative of fuel assemblies with the design basis burnup levels considered. These distributions are used for analyses only, and do not provide a criteria for fuel assembly acceptability for storage in the HI-STORM 100 System.

Except for MPC-68F, ~~F~~*f*uel may be stored in the MPC using one of two storage strategies, namely, uniform loading and regionalized loading. Uniform loading allows storage of any fuel assembly in any fuel storage location, subject to additional restrictions, *such as those* ~~specified in the CoC~~ for

~~preferential fuel loading and~~ loading of fuel assemblies containing non-fuel hardware as defined in Table 1.0.1. Regionalized fuel loading allows for higher heat emitting fuel assemblies to be stored in the central core basket storage locations *(inner region)* with lower heat emitting fuel assemblies in the peripheral fuel storage locations *(outer region)*. Regionalized loading allows storage of higher heat emitting fuel assemblies than would otherwise be permitted using the uniform loading strategy. The definition of the regions for each MPC model and the associated burnup, cooling time, and decay heat limits are ~~found~~ *defined* in ~~Appendix B to the CoC~~*Table 2.1.13*. Regionalized fuel loading ~~meets the intent of preferential fuel loading.~~ *is not permitted in MPC-68F.*

2.1.7 Radiological Parameters for Design Basis SNF

The principal radiological design criteria for the HI-STORM 100 System are the 10CFR72.104 site boundary dose rate limits and maintaining operational dose rates as low as reasonably achievable (ALARA). The radiation dose is directly affected by the gamma and neutron source terms of the SNF assembly.

The gamma and neutron sources are separate and are affected differently by enrichment, burnup, and cooling time. It is recognized that, at a given burnup, the radiological source terms increase monotonically as the initial enrichment is reduced. The shielding design basis fuel assembly, therefore, is evaluated at conservatively high burnups, low cooling times, and low enrichments, as discussed in Chapter 5. The shielding design basis fuel assembly thus bounds all other fuel assemblies.

The design basis dose rates can be met by a variety of burnup levels and cooling times. ~~The Approved Contents section of Appendix B to the CoC~~*Section 2.1.9* provides the *procedure for determining* burnup and cooling time limits for all of the authorized fuel assembly array/classes for both uniform fuel loading and regionalized loading.

Table 2.1.11 and Figures 2.1.3 and 2.1.4 provide the axial distribution for the radiological source terms for PWR and BWR fuel assemblies based on the axial burnup distribution. The axial burnup distributions are representative of fuel assemblies with the design basis burnup levels considered. These distributions are used for analyses only, and do not provide a criteria for fuel assembly acceptability for storage in the HI-STORM 100 System.

Thoria rods placed in Dresden Unit 1 Thoria Rod Canisters meeting the requirements of Table 2.1.12 and Dresden Unit 1 fuel assemblies with one Antimony-Beryllium neutron source have been qualified for storage. Up to one Thoria Rod Canister is authorized for storage in combination with other intact and damaged fuel, and fuel debris as specified in ~~Appendix B to the CoC~~*Section 2.1.9.*

Non-fuel hardware, as defined in Table 1.0.1, ~~and the CoC~~ has been evaluated and is authorized for storage in the PWR MPCs as specified in ~~Appendix B to the CoC~~*Section 2.1.9.*

2.1.8 Criticality Parameters for Design Basis SNF

As discussed earlier, the MPC-68, MPC-68F, MPC-68FF, ~~and~~ MPC-32 *and MPC-32F* feature a basket without flux traps. In the aforementioned baskets, there is one panel of neutron absorber

between two adjacent fuel assemblies. The MPC-24, MPC-24E, and MPC-24EF employ a construction wherein two neighboring fuel assemblies are separated by two panels of neutron absorber with a water gap between them (flux trap construction).

The minimum ^{10}B areal density in the neutron absorber panels for each MPC model is shown in Table 2.1.15.

For all MPCs, the ^{10}B areal density used for *the criticality* analysis is conservatively established *below* ~~at 75% of~~ the minimum *values shown in Table 2.1.15. For Boral, the value used in the analysis is 75% of the minimum value, while for METAMIC, it is 90% of the minimum value.* ~~^{10}B areal density to demonstrate that the reactivity under the most adverse accumulation of tolerances and biases is less than 0.95.~~ This is consistent with NUREG-1536 [2.1.5] which ~~requires~~ *suggests* a 25% reduction in ^{10}B areal density credit *when subject to standard acceptance tests, and which allows a smaller reduction when more comprehensive tests of the areal density are performed.* ~~A large body of sampling data accumulated by Holtec from thousands of manufactured Boral panels indicates the average ^{10}B areal densities to be approximately 15% greater than the specified minimum.~~

The criticality analyses for the MPC-24, MPC-24E and MPC-24EF (all with higher enriched fuel) and for the MPC-32 *and MPC-32F* were performed with credit taken for soluble boron in the MPC water during wet loading and unloading operations. Table 2.1.14 *and 2.1.16* provides the required soluble boron concentrations for these MPCs. ~~Minimum soluble boron concentration is also included as Limiting Condition for Operation (LCO)3.3.1 in the Technical Specifications found in Appendix A to the CoC.~~

2.1.9 Summary of ~~SNF Design Criteria~~*Authorized Contents*

~~Tables 2.1.1 through 2.1.8 and Table 2.1.12 provide the design characteristics~~*Tables 2.1.3, 2.1.4, 2.1.12, and 2.1.17 through 2.1.29 together specify the limits* for spent fuel and non-fuel hardware authorized for storage in the HI-STORM 100 System. *The limits in these tables are derived from the safety analyses described in the following chapters of this FSAR.* ~~Much of this information is repeated in the Approved Contents section of Appendix B to the CoC. Only fuel meeting the specifications in the CoC is authorized for storage.~~ Fuel classified as damaged fuel assemblies or fuel debris must be stored in damaged fuel containers for storage in the HI-STORM 100 System.

Tables 2.1.17 through 2.1.24 are the baseline tables that specify the fuel assembly limits for each of the MPC models, with appropriate references to the other tables in this section for certain other limits. Tables 2.1.17 through 2.1.24 refer to Section 2.1.9.1 for ZR-clad fuel limits on minimum cooling time, maximum decay heat, and maximum burnup for uniform and regionalized fuel loading. Limits on decay heat, burnup, and cooling time for stainless steel-clad fuel are provided in Tables 2.1.17 through 2.1.24.

2.1.9.1 Decay Heat, Burnup, and Cooling Time Limits for ZR-Clad Fuel

Each ZR-clad fuel assembly to be stored in the HI-STORM 100 System must meet the following limits in addition to meeting the physical limits specified elsewhere in this section to be authorized for storage in the HI-STORM 100 System. Each fuel assembly to be stored must be verified to have:

- *A decay heat less than or equal to the maximum allowable value, including consideration of PWR non-fuel hardware, as applicable.*
- *An assembly average enrichment greater than or equal to the minimum value used in determining the maximum allowable burnup.*
- *A burnup less than or equal to the maximum allowable value.*
- *A cooling time greater than or equal to the minimum allowable value.*

The maximum allowable ZR-clad fuel assembly decay heat values are determined using the methodology described in Section 2.1.9.1.1 or 2.1.9.1.2 depending on whether uniform fuel loading or regionalized fuel loading is being implemented[†]. The decay heat limits are independent of burnup, cooling time, or enrichment and are based strictly on the thermal analysis described in Chapter 4. Decay heat limits must be met for all contents in a fuel storage location (i.e., fuel and PWR non-fuel hardware, as applicable).

The maximum allowable average burnup per fuel assembly is determined by calculation as a function of minimum enrichment, maximum allowable decay heat, and minimum cooling time from 3 to 20 years, as described in Section 2.1.9.1.3.

Section 12.2.10 describes how compliance with these limits may be verified, including practical examples.

2.1.9.1.1 Uniform Fuel Loading Decay Heat Limits for ZR-Clad Fuel

Table 2.1.26 provides the maximum allowable decay heat per ZR-clad fuel assembly for uniform fuel loading for each MPC model.

2.1.9.1.2 Regionalized Fuel Loading Decay Heat Limits for ZR-Clad Fuel

The allowable maximum decay heat per ZR-clad fuel assembly for regionalized fuel loading shall be calculated as follows. The fuel storage regions are defined in Table 2.1.13. The number of fuel storage locations in each region and the maximum total decay heat per MPC model is provided in Table 2.1.27.

(i) Choose a value of X between 1 and 6, where X is the ratio of the maximum decay heat per

---

† Note that the stainless steel-clad fuel limits apply to all fuel in the MPC, if a mixture of stainless steel and ZR-clad fuel is stored in the same MPC. The stainless steel-clad fuel assembly decay heat limits may be found in Table 2.1.17 through 2.1.24

fuel assembly permitted in Region 1 ($q_{Region\ 1}$) to the maximum decay heat permitted per fuel assembly in Region 2 ($q_{Region\ 2}$).

(ii) Calculate $q_{Region\ 2}$ using the following equation:

$$q_{Region\ 2} = (2 \times Q)/[(1 + X^{0.15}) \times (N_{Region\ 1} \times X + N_{Region\ 2})] \qquad \text{Equation 2.1.9.1}$$

Where:

$q_{Region\ 2}$ = Maximum allowable decay heat per fuel assembly in Region 2 (kW)

Q = Maximum allowable heat load for the MPC from Table 2.1.27 (kW)

X = Ratio of $q_{Region\ 1}$ to $q_{Region\ 2}$ chosen in Step (i)

$N_{Region\ 1}$ = Number of fuel storage locations in Region 1 from Table 2.1.27

$N_{Region\ 2}$ = Number of fuel storage locations in Region 2 from Table 2.1.27

(iii) Calculate $q_{Region\ 1}$ using the following equation:

$$q_{Region\ 1} = X \times q_{Region\ 2} \qquad \text{Equation 2.1.9.2}$$

Where:

$q_{Region\ 1}$ = Maximum allowable decay heat per fuel assembly in Region 1 (kW)

X = Ratio of $q_{Region\ 1}$ to $q_{Region\ 2}$ chosen in Step (i)

$q_{Region\ 2}$ = Maximum allowable decay heat per fuel assembly in Region 2 calculated in Step (ii) (kW)

2.1.9.1.3 Burnup Limits as a Function of Cooling Time for ZR-Clad Fuel

The maximum allowable ZR-clad fuel assembly average burnup varies with the following parameters, based on the shielding analysis in Chapter 5:

- *Minimum required fuel assembly cooling time*
- *Maximum allowable fuel assembly decay heat*
- *Minimum fuel assembly average enrichment*

The calculation described in this section is used to determine the maximum allowable fuel assembly burnup for minimum cooling times between 3 and 20 years, using maximum decay heat and minimum enrichment as input values. This calculation may be used to create multiple burnup versus cooling time tables for a particular fuel assembly array/class and different minimum enrichments. The allowable maximum burnup for a specific fuel assembly may be calculated based on the assembly's particular enrichment and cooling time.

(i) Choose a fuel assembly minimum enrichment, E_{235}.

(ii) Calculate the maximum allowable fuel assembly average burnup for a minimum cooling time between 3 and 20 years using the equation below:

$$Bu = (A \times q) + (B \times q^2) + (C \times q^3) + [D \times (E_{235})^2] + (E \times q \times E_{235}) + (F \times q^2 \times E_{235}) + G$$

Equation 2.1.9.3

Where:

Bu = Maximum allowable assembly average burnup (MWD/MTU)

q = Maximum allowable decay heat per fuel assembly determined in Section 2.1.9.1 or 2.1.9.2 (kW)

E_{235} = Minimum fuel assembly average enrichment (wt. % ^{235}U) (e.g., for 4.05 wt. %, use 4.05)

A through G = Coefficients from Tables 2.1.28 or 2.1.29 for the applicable fuel assembly array/class and minimum cooling time.

2.1.9.1.4 Other Considerations

In computing the allowable maximum fuel assembly decay heats and average burnups, the following requirements apply:

- *Calculated burnup limits shall be rounded down to the nearest integer*
- *Calculated burnup limits greater than 68,200 MWD/MTU for PWR fuel and 65,000 MWD/MTU for BWR fuel must be reduced to be equal to these values.*
- *Linear interpolation of calculated burnups between cooling times for a given fuel assembly maximum decay heat and minimum enrichment is permitted. For example, the allowable burnup for a minimum cooling time of 4.5 years may be interpolated between those burnups calculated for 4 and 5 years.*

- *ZR-clad fuel assemblies must have a minimum enrichment, as defined in Table 1.0.1, greater than or equal to the value used in determining the maximum allowable burnup per Section 2.1.9.1.3 to be authorized for storage in the MPC.*

- *When complying with the maximum ZR-clad fuel assembly decay heat limits, users must account for the decay heat from PWR non-fuel hardware, as applicable for the particular fuel storage location, to ensure the decay heat emitted by all contents in a storage location does not exceed the limit.*

Section 12.2.10 provides a practical example of determining fuel assembly decay heat, burnup, and cooling time limits and verifying compliance for a set of example given fuel assemblies.

Table 2.1.1

PWR FUEL ASSEMBLIES EVALUATED TO DETERMINE DESIGN BASIS SNF

Assembly Class	Array Type
B&W 15x15	All
B&W 17x17	All
CE 14x14	All
CE 16x16	All except System 80™
WE 14x14	All
WE 15x15	All
WE 17x17	All
St. Lucie	All
Ft. Calhoun	All
Haddam Neck (Stainless Steel Clad)	All
San Onofre 1 (Stainless Steel Clad)	All
Indian Point 1	All

Table 2.1.2

BWR FUEL ASSEMBLIES EVALUATED TO DETERMINE DESIGN BASIS SNF

Assembly Class	Array Type			
GE BWR/2-3	All 7x7	All 8x8	All 9x9	All 10x10
GE BWR/4-6	All 7x7	All 8x8	All 9x9	All 10x10
Humboldt Bay	All 6x6	All 7x7 (~~Zircaloy~~*ZR* Clad)		
Dresden-1	All 6x6	All 8x8		
LaCrosse (Stainless Steel Clad)	All			

Table 2.1.3
PWR FUEL ASSEMBLY CHARACTERISTICS (Note 1)

Fuel Assembly Array/ Class	14x14 A	14x14 B	14x14 C	14x14 D	14x14E
Clad Material (Note 2)	~~Zr~~*ZR*	*ZR*~~Zr~~	*ZR*~~Zr~~	SS	SS
Design Initial U (kg/assy.) (Note 3)	≤ ~~407~~ *365*	≤ ~~407~~ *412*	≤ ~~425~~ *438*	≤ 400	≤ 206
Initial Enrichment (MPC-24, 24E, and 24EF without soluble boron credit) (wt % ^{235}U) (Note 7)	≤ 4.6 (24) ≤ 5.0 (24E/24EF)	≤ 4.6 (24) ≤ 5.0 (24E/24EF)	≤ 4.6 (24) ≤ 5.0 (24E/24EF)	≤ 4.0 (24) ≤ 5.0 (24E/24EF)	≤ 5.0 (24) ≤ 5.0 (24E/24EF)
Initial Enrichment (MPC-24, 24E, 24EF, *32* or 32*F* with soluble boron credit — *see* Notes 5 ~~and 7~~) (wt % ^{235}U)	≤ 5.0	≤ 5.0	≤ 5.0	≤ 5.0	≤ 5.0
No. of Fuel Rod Locations	179	179	176	180	173
Fuel Clad O.D. (in.)	≥ 0.400	≥ 0.417	≥ 0.440	≥ 0.422	≥ 0.3415
Fuel Clad I.D. (in.)	≤ 0.3514	≤ 0.3734	≤ 0.3880	≤ 0.3890	≤ 0.3175
Fuel Pellet Dia. (in.)	≤ 0.3444	≤ 0.3659	≤ 0.3805	≤ 0.3835	≤ 0.3130
Fuel Rod Pitch (in.)	≤ 0.556	≤ 0.556	≤ 0.580	≤ 0.556	Note 6
Active Fuel Length (in.)	≤ 150	≤ 150	≤ 150	≤ 144	≤ 102
No. of Guide and/or Instrument Tubes	17	17	5 (Note 4)	16	0
Guide/Instrument Tube Thickness (in.)	≥ 0.017	≥ 0.017	≥ 0.038	≥ 0.0145	N/A

Table 2.1.3 (continued)
PWR FUEL ASSEMBLY CHARACTERISTICS (Note 1)

Fuel Assembly Array/Class	15x15 A	15x15 B	15x15 C	15x15 D	15x15 E	15x15 F
Clad Material (Note 2)	~~ZRZ~~	~~ZRZ~~	~~ZRZ~~	~~ZRZ~~	~~ZRZ~~	~~ZRZ~~
Design Initial U (kg/assy.) (Note 3)	≤ ~~464~~ *473*	≤ ~~464~~ *473*	≤ ~~464~~ *473*	≤ ~~475~~ *495*	≤ ~~475~~ *495*	≤ ~~475~~ *495*
Initial Enrichment (MPC-24, 24E, and 24EF without soluble boron credit) (wt % ^{235}U) (Note 7)	≤ 4.1 (24) ≤ 4.5 (24E/24EF)	≤ 4.1 (24) ≤ 4.5 (24E/24EF)	≤ 4.1 (24) ≤ 4.5 (24E/24EF)	≤ 4.1 (24) ≤ 4.5 (24E/24EF)	≤ 4.1 (24) ≤ 4.5 (24E/24EF)	≤ 4.1 (24) ≤ 4.5 (24E/24EF)
Initial Enrichment (MPC-24, 24E, *32* or 32*F* with soluble boron credit — *see* Notes 5 ~~and 7~~) (wt % ^{235}U)	≤ 5.0	≤ 5.0	≤ 5.0	≤ 5.0	≤ 5.0	≤ 5.0
No. of Fuel Rod Locations	204	204	204	208	208	208
Fuel Clad O.D. (in.)	≥ 0.418	≥ 0.420	≥ 0.417	≥ 0.430	≥ 0.428	≥ 0.428
Fuel Clad I.D. (in.)	≤ 0.3660	≤ 0.3736	≤ 0.3640	≤ 0.3800	≤ 0.3790	≤ 0.3820
Fuel Pellet Dia. (in.)	≤ 0.3580	≤ 0.3671	≤ 0.3570	≤ 0.3735	≤ 0.3707	≤ 0.3742
Fuel Rod Pitch (in.)	≤ 0.550	≤ 0.563	≤ 0.563	≤ 0.568	≤ 0.568	≤ 0.568
Active Fuel Length (in.)	≤ 150	≤ 150	≤ 150	≤ 150	≤ 150	≤ 150
No. of Guide and/or Instrument Tubes	21	21	21	17	17	17
Guide/Instrument Tube Thickness (in.)	≥ 0.0165	≥ 0.015	≥ 0.0165	≥ 0.0150	≥ 0.0140	≥ 0.0140

Table 2.1.3 (continued)
PWR FUEL ASSEMBLY CHARACTERISTICS (Note 1)

Fuel Assembly Array and Class	15x15 G	15x15H	16x16 A	17x17A	17x17 B	17x17 C
Clad Material (Note 2)	SS	~~ZRZr~~	~~ZRZr~~	~~ZRZr~~	~~ZRZr~~	~~ZRZr~~
Design Initial U (kg/assy.) (Note 3)	≤ 420	≤ ~~475~~ *495*	≤ ~~443~~ *448*	≤ ~~467~~ *433*	≤ ~~467~~ *474*	≤ ~~474~~ *480*
Initial Enrichment (MPC-24, 24E, and 24EF without soluble boron credit) (wt % ^{235}U) (Note 7)	≤ 4.0 (24) ≤ 4.5 (24E/24EF)	≤ 3.8 (24) ≤ 4.2 (24E/24EF)	≤ 4.6 (24) ≤ 5.0 (24E/24EF)	≤ 4.0 (24) ≤ 4.4 (24E/24EF)	≤ 4.0 (24) ≤ 4.4 (24E/24EF)	≤ 4.0 (24) ≤ 4.4 (24E/24EF)
Initial Enrichment (MPC-24, 24E, *32* or 32*F* with soluble boron credit — *see* Notes 5 ~~and 7~~) (wt % ^{235}U)	≤ 5.0	≤ 5.0	≤ 5.0	≤ 5.0	≤ 5.0	≤ 5.0
No. of Fuel Rod Locations	204	208	236	264	264	264
Fuel Clad O.D. (in.)	≥ 0.422	≥ 0.414	≥ 0.382	≥ 0.360	≥ 0.372	≥ 0.377
Fuel Clad I.D. (in.)	≤ 0.3890	≤ 0.3700	≤ 0.3320	≤ 0.3150	≤ 0.3310	≤ 0.3330
Fuel Pellet Dia. (in.)	≤ 0.3825	≥ 0.3622	≤ 0.3255	≤ 0.3088	≤ 0.3232	≤ 0.3252
Fuel Rod Pitch (in.)	≤ 0.563	≤ 0.568	≤ 0.506	≤ 0.496	≤ 0.496	≤ 0.502
Active Fuel length (in.)	≤ 144	≤ 150	≤ 150	≤ 150	≤ 150	≤ 150
No. of Guide and/or Instrument Tubes	21	17	5 (Note 4)	25	25	25
Guide/Instrument Tube Thickness (in.)	≥ 0.0145	≥ 0.140	≥ 0.0400	≥ 0.016	≥ 0.014	≥ 0.020

Table 2.1.3 (continued)
PWR FUEL ASSEMBLY CHARACTERISTICS

Notes:

1. All dimensions are design nominal values. Maximum and minimum dimensions are specified to bound variations in design nominal values among fuel assemblies within a given array/class.

2. ~~Zr designates cladding material made of zirconium or zirconium alloys~~*See Table 1.0.1 for the definition of "ZR."*

3. Design initial uranium weight is the nominal uranium weight specified for each assembly by the fuel manufacturer or reactor user. For each PWR fuel assembly, the total uranium weight limit specified in this table may be increased up to 2.0 percent for comparison with users' fuel records to account for manufacturer's tolerances.

4. Each guide tube replaces four fuel rods.

5. Soluble boron concentration per ~~Technical Specification LCO 3.3.1~~*Tables 2.1.14 and 2.1.16, as applicable.*

6. This fuel assembly array/class includes only the Indian Point Unit 1 fuel assembly. This fuel assembly has two pitches in different sectors of the assembly. These pitches are 0.441 inches and 0.453 inches.

7. For those MPCs loaded with both intact fuel assemblies and damaged fuel assemblies or fuel debris, the maximum initial enrichment of the intact fuel assemblies, damaged fuel assemblies and fuel debris is 4.0 wt.% ^{235}U.

Table 2.1.4
BWR FUEL ASSEMBLY CHARACTERISTICS (Note 1)

Fuel Assembly Array and Class	6x6 A	6x6 B	6x6 C	7x7 A	7x7 B	8x8 A
Clad Material (Note 2)	~~ZRZr~~	~~ZRZr~~	~~ZRZr~~	~~ZRZr~~	~~ZRZr~~	~~ZRZr~~
Design Initial U (kg/assy.) (Note 3)	≤ 110	≤ 110	≤ 110	≤ 100	≤ ~~195~~ *198*	≤ 120
Maximum Planar-Average Initial Enrichment (wt.% ^{235}U) (Note 14)	≤ 2.7	≤ 2.7 for UO_2 rods. See Note 4 for MOX rods	≤ 2.7	≤ 2.7	≤ 4.2	≤ 2.7
Initial Maximum Rod Enrichment (wt.% ^{235}U)	≤ 4.0	≤ 4.0	≤ 4.0	≤ 5.5	≤ 5.0	≤ 4.0
No. of Fuel Rod Locations	35 or 36	35 or 36 (up to 9 MOX rods)	36	49	49	63 or 64
Fuel Clad O.D. (in.)	≥ 0.5550	≥ 0.5625	≥ 0.5630	≥ 0.4860	≥ 0.5630	≥ 0.4120
Fuel Clad I.D. (in.)	≤ 0.5105	≤ 0.4945	≤ 0.4990	≤ 0.4204	≤ 0.4990	≤ 0.3620
Fuel Pellet Dia. (in.)	≤ 0.4980	≤ 0.4820	≤ 0.4880	≤ 0.4110	≤ 0.4910	≤ 0.3580
Fuel Rod Pitch (in.)	≤ 0.710	≤ 0.710	≤ 0.740	≤ 0.631	≤ 0.738	≤ 0.523
Active Fuel Length (in.)	≤ 120	≤ 120	≤ 77.5	≤ 80	≤ 150	≤ 120
No. of Water Rods (Note 11)	1 or 0	1 or 0	0	0	0	1 or 0
Water Rod Thickness (in.)	> 0	> 0	N/A	N/A	N/A	≥ 0
Channel Thickness (in.)	≤ 0.060	≤ 0.060	≤ 0.060	≤ 0.060	≤ 0.120	≤ 0.100

Table 2.1.4 (continued)
BWR FUEL ASSEMBLY CHARACTERISTICS (Note 1)

Fuel Assembly Array and Class	8x8 B	8x8 C	8x8 D	8x8 E	8x8F	9x9 A
Clad Material (Note 2)	~~ZRZ~~	~~ZRZ~~	~~ZRZ~~	~~ZRZ~~	~~ZRZ~~	~~ZRZ~~
Design Initial U (kg/assy.) (Note 3)	≤ ~~191~~ *192*	≤ ~~191~~*190*	≤ ~~191~~ *190*	≤ ~~191~~ *190*	≤ 191	≤ ~~179~~ *180*
Maximum Planar-Average Initial Enrichment (wt.% ^{235}U) (Note 14)	≤ 4.2	≤ 4.2	≤ 4.2	≤ 4.2	≤ 4.0	≤ 4.2
Initial Maximum Rod Enrichment (wt.% ^{235}U)	≤ 5.0	≤ 5.0	≤ 5.0	≤ 5.0	≤ 5.0	≤ 5.0
No. of Fuel Rod Locations	63 or 64	62	60 or 61	59	64	74/66 (Note 5)
Fuel Clad O.D. (in.)	≥ 0.4840	≥ 0.4830	≥ 0.4830	≥ 0.4930	≥ 0.4576	≥ 0.4400
Fuel Clad I.D. (in.)	≤ 0.4295	≤ 0.4250	≤ 0.4230	≤ 0.4250	≤ 0.3996	≤ 0.3840
Fuel Pellet Dia. (in.)	≤ 0.4195	≤ 0.4160	≤ 0.4140	≤ 0.4160	≤ 0.3913	≤ 0.3760
Fuel Rod Pitch (in.)	≤ 0.642	≤ 0.641	≤ 0.640	≤ 0.640	≤ 0.609	≤ 0.566
Design Active Fuel Length (in.)	≤ 150	≤ 150	≤ 150	≤ 150	≤ 150	≤ 150
No. of Water Rods (Note 11)	1 or 0	2	1 - 4 (Note 7)	5	N/A (Note 12)	2
Water Rod Thickness (in.)	≥ 0.034	> 0.00	> 0.00	≥ 0.034	≥ 0.0315	> 0.00
Channel Thickness (in.)	≤ 0.120	≤ 0.120	≤ 0.120	≤ 0.100	≤ 0.100	≤ 0.120

Table 2.1.4 (continued)
BWR FUEL ASSEMBLY CHARACTERISTICS (Note 1)

Fuel Assembly Array and Class	9x9 B	9x9 C	9x9 D	9x9 E (Note 13)	9x9 F (Note 13)	9x9 G
Clad Material (Note 2)	*ZRZ~~r~~*	*ZRZ~~r~~*	*ZRZ~~r~~*	*ZRZ~~r~~*	*ZRZ~~r~~*	*ZRZ~~r~~*
Design Initial U (kg/assy.) (Note 3)	≤ ~~179~~ *180*	≤ ~~179~~ *182*	≤ ~~179~~ *182*	≤ ~~179~~ *183*	≤ ~~179~~ *183*	≤ ~~179~~ *164*
Maximum Planar-Average Initial Enrichment (wt.% ^{235}U) (Note 14)	≤ 4.2	≤ 4.2	≤ 4.2	≤ 4.0	≤ 4.0	≤ 4.2
Initial Maximum Rod Enrichment (wt.% ^{235}U)	≤ 5.0	≤ 5.0	≤ 5.0	≤ 5.0	≤ 5.0	≤ 5.0
No. of Fuel Rod Locations	72	80	79	76	76	72
Fuel Clad O.D. (in.)	≥ 0.4330	≥ 0.4230	≥ 0.4240	≥ 0.4170	≥ 0.4430	≥ 0.4240
Fuel Clad I.D. (in.)	≤ 0.3810	≤ 0.3640	≤ 0.3640	≤ 0.3640	≤ 0.3860	≤ 0.3640
Fuel Pellet Dia. (in.)	≤ 0.3740	≤ 0.3565	≤ 0.3565	≤ 0.3530	≤ 0.3745	≤ 0.3565
Fuel Rod Pitch (in.)	≤ 0.572	≤ 0.572	≤ 0.572	≤ 0.572	≤ 0.572	≤ 0.572
Design Active Fuel Length (in.)	≤ 150	≤ 150	≤ 150	≤ 150	≤ 150	≤ 150
No. of Water Rods (Note 11)	1 (Note 6)	1	2	5	5	1 (Note 6)
Water Rod Thickness (in.)	> 0.00	≥ 0.020	≥ 0.0300	≥ 0.0120	≥ 0.0120	≥ 0.0320
Channel Thickness (in.)	≤ 0.120	≤ 0.100	≤ 0.100	≤ 0.120	≤ 0.120	≤ 0.120

Table 2.1.4 (continued)
BWR FUEL ASSEMBLY CHARACTERISTICS (Note 1)

Fuel Assembly Array and Class	10x10 A	10x10 B	10x10 C	10x10 D	10x10 E
Clad Material (Note 2)	*ZRZ~~F~~*	*ZRZ~~F~~*	*ZRZ~~F~~*	SS	SS
Design Initial U (kg/assy.) (Note 3)	≤ 188	≤ 188	≤ ~~188~~ *179*	≤ 125	≤ 125
Maximum Planar-Average Initial Enrichment (wt.% ^{235}U) (Note 14)	≤ 4.2	≤ 4.2	≤ 4.2	≤ 4.0	≤ 4.0
Initial Maximum Rod Enrichment (wt.% ^{235}U)	≤ 5.0	≤ 5.0	≤ 5.0	≤ 5.0	≤ 5.0
No. of Fuel Rod Locations	92/78 (Note 8)	91/83 (Note 9)	96	100	96
Fuel Clad O.D. (in.)	≥ 0.4040	≥ 0.3957	≥ 0.3780	≥ 0.3960	≥ 0.3940
Fuel Clad I.D. (in.)	≤ 0.3520	≤ 0.3480	≤ 0.3294	≤ 0.3560	≤ 0.3500
Fuel Pellet Dia. (in.)	≤ 0.3455	≤ 0.3420	≤ 0.3224	≤ 0.3500	≤ 0.3430
Fuel Rod Pitch (in.)	≤ 0.510	≤ 0.510	≤ 0.488	≤ 0.565	≤ 0.557
Design Active Fuel Length (in.)	≤ 150	≤ 150	≤ 150	≤ 83	≤ 83
No. of Water Rods (Note 11)	2	1 (Note 6)	5 (Note 10)	0	4
Water Rod Thickness (in.)	≥ 0.030	> 0.00	≥ 0.031	N/A	≥ 0.022
Channel Thickness (in.)	≤ 0.120	≤ 0.120	≤ 0.055	≤ 0.080	≤ 0.080

Table 2.1.4 (continued)
BWR FUEL ASSEMBLY CHARACTERISTICS

NOTES:

1. All dimensions are design nominal values. Maximum and minimum dimensions are specified to bound variations in design nominal values among fuel assemblies within a given array/class.

2. *See Table 1.0.1 for the definition of "ZR."* ~~"Zr designates cladding material made of zirconium or zirconium alloys.~~

3. Design initial uranium weight is the nominal uranium weight specified for each assembly by the fuel manufacturer or reactor user. For each BWR fuel assembly, the total uranium weight limit specified in this table may be increased up to 1.5 percent for comparison with users' fuel records to account for manufacturer tolerances.

4. $\leq$ 0.635 wt. % ^{235}U and $\leq$ 1.578 wt. % total fissile plutonium (^{239}Pu and ^{241}Pu), (wt. % of total fuel weight, i.e., UO_2 plus PuO_2)

5. This assembly class contains 74 total rods; 66 full length rods and 8 partial length rods.

6. Square, replacing nine fuel rods.

7. Variable.

8. This assembly contains 92 total fuel rods; 78 full length rods and 14 partial length rods.

9. This assembly class contains 91 total fuel rods; 83 full length rods and 8 partial length rods.

10. One diamond-shaped water rod replacing the four center fuel rods and four rectangular water rods dividing the assembly into four quadrants.

11. These rods may also be sealed at both ends and contain Zr material in lieu of water.

12. This assembly is known as "QUAD+." It has four rectangular water cross segments dividing the assembly into four quadrants.

13. For the SPC 9x9-5 fuel assembly, each fuel rod must meet either the 9x9E or the 9x9F set of limits or clad O.D., clad I.D., and pellet diameter.

14. For those MPCs loaded with both intact fuel assemblies and damaged fuel assemblies or fuel debris, the maximum planar average initial enrichment for the intact fuel assemblies is limited to 3.7 wt.% ^{235}U, as applicable.

Table 2.1.5

DESIGN BASIS FUEL ASSEMBLY FOR EACH DESIGN CRITERION

Criterion	~~MPC-68/68F/68FF~~*BWR*	~~MPC-24~~*PWR*
Reactivity (Criticality)	GE12/14 10x10 with Partial Length Rods (*Array*/Class 10x10A)	B&W 15x15 (*Array*/Class 15x15F)
~~Source Term~~ (Shielding)	GE 7x7 ~~(Class 7x7B)~~	B&W 15x15 ~~(Class 15x15F)~~
Fuel Assembly Effective Planar Thermal Conductivity	*GE-11 9x9*	*W 17x17 OFA*
Fuel Basket Effective Axial Thermal Conductivity	*GE 7x7*	*W 14x14 OFA*
MPC Density and Heat Capacity	*GE 7x7*	*W 14x14 OFA*
MPC Fuel Basket Axial Resistance to Thermosiphon Flow	*GE-12/14 10x10*	*B&W 15x15*

Table 2.1.6

TABLE INTENTIONALLY DELETED

~~DESIGN CHARACTERISTICS FOR INTACT ZIRCALOYZR CLAD FUEL ASSEMBLIES[1]~~

	~~MPC-68/68FF~~	~~MPC-68F~~	~~MPC-24~~	~~MPC-24E/24EF~~	~~MPC-32/32F~~
~~PHYSICAL PARAMETERS:~~					
~~Max. assembly width (in.)~~	~~5.85~~	~~4.70~~	~~8.54~~	~~8.54~~	~~8.54~~
~~Max. assembly length (in.)~~	~~176.5~~	~~135.0~~	~~176.8~~	~~176.8~~	~~176.8~~
~~Max. assembly weight[2] (lb.)~~	~~700~~	~~400~~	~~1680~~	~~1680~~	~~1680~~
~~Max. active fuel length (in.)~~	~~150~~	~~120~~	~~150~~	~~150~~	~~150~~
~~RADIOLOGICAL AND THERMAL CHARACTERISTICS:~~					
	~~MPC-68/68FF~~	~~MPC-68F~~	~~MPC-24~~	~~MPC-24E/24EF~~	~~MPC-32/32F~~
~~Max. initial enrichment (wt% ^{235}U)~~	~~See Table 2.1.4~~	~~See Table 2.1.4~~	~~See Table 2.1.3~~	~~See Table 2.1.3~~	~~See Table 2.1.3~~
~~Max. heat generation (W)~~	~~Table 2.0.1~~	~~Table 2.0.1~~	~~Table 2.0.1~~	~~Table 2.0.1~~	~~Table 2.0.1~~
~~Max. average burnup (MWD/MTU)[3]~~	~~59,900 *70,000*~~	~~30,000~~	~~66,200 *75,000*~~	~~68,200 *75,000*~~	~~54,700 *75,000*~~
~~Min. cooling time (years)~~	~~5 *3*~~	~~18~~	~~5 *3*~~	~~5 *3*~~	~~5 *3*~~

~~[1] These are limiting values for all authorized fuel assembly array/classes. Refer to the Approved Contents section of Appendix B to the CoC for specific limits for each fuel assembly array/class.~~

~~[2] Fuel assembly weight including non-fuel hardware, and channels, as applicable, based on DOE MPC DPS [2.1.6].~~

~~[3] The maximum burnup for fuel assemblies with cladding made of materials other than Zircaloy 2 or Zircaloy 4 is 45,000 MWD/MTU~~

Table 2.1.7

TABLE INTENTIONALLY DELETED

~~DESIGN CHARACTERISTICS FOR DAMAGED FUEL ASSEMBLIES[1]~~

	~~MPC-68/68FF (Damaged Fuel and Fuel Debris)~~	~~MPC-68F (Damaged Fuel and Fuel Debris)~~	~~MPC-24E/24EF *MPC-32/MPC-32F* (Damaged Fuel and Fuel Debris)~~
~~PHYSICAL PARAMETERS:~~			
~~Max. assembly width (in.)~~	~~5.5~~	~~4.7~~	~~8.54~~
~~Max. assembly length (in.)~~	~~176.5~~	~~135.0~~	~~176.8~~
~~Max. assembly weight[2] (lb.)~~	~~700~~	~~550~~	~~1680~~
~~Max. active fuel length (in.)~~	~~150~~	~~110~~	~~150~~
~~Fuel rod clad material~~	~~Zircaloy*ZR*/SS~~	~~Zircaloy*ZR*~~	~~Zircaloy*ZR*/SS~~
~~RADIOLOGICAL AND THERMAL CHARACTERISTICS:~~			
~~Max. heat generation (W)~~	~~356 *See Table 2.0.1*~~	~~115~~	~~927 *See Table 2.0.1*~~
~~Min. cooling time (yr)~~	~~5 *3*~~	~~18~~	~~5 *3*~~
~~Max. initial enrichment (wt.% ^{235}U) for UO_2 rods~~	~~4.0~~	~~2.7~~	~~4.0 *5.0*~~
~~Max. initial enrichment for MOX rods~~	~~0.635 wt.% ^{235}U 1.578 wt. % Total Fissile Plutonium~~	~~0.635 wt.% ^{235}U 1.578 wt. % Total Fissile Plutonium~~	~~N/A~~
~~Max. average burnup (MWD/MTU)[3]~~	~~59,900*70,000 (ZR) 22,500 (SS)*~~	~~30,000~~	~~68,200*75,000 (ZR) 40,000 (SS)*~~

~~Note: Refer to the Approved Contents section of Appendix B to the CoC for restrictions on the number and location of damaged fuel assemblies and fuel debris authorized for loading in the HI-STORM 100 System.~~

~~[1] These are limiting values for all authorized fuel assembly array/classes. Refer to the Approved Contents section of Appendix B to the CoC for specific limits for each fuel assembly array/class.~~

~~[2] Fuel assembly weight including non-fuel hardware, channels, and DFC, as applicable, based on DOE MPC DPS [2.1.6].~~

~~[3] The maximum burnup for fuel assemblies with cladding made of materials other than Zircaloy-2 or Zircaloy-4 is 45,000 MWD/MTU~~

Table 2.1.8

TABLE INTENTIONALLY DELETED

~~DESIGN CHARACTERISTICS FOR INTACT STAINLESS STEEL CLAD FUEL ASSEMBLIES[1]~~

	~~BWR MPC-68/68FF~~	~~PWR MPC-24/24E/24EF~~	~~PWR MPC-32/32F~~
~~PHYSICAL PARAMETERS:~~			
~~Max. assembly width[2] (in.)~~	~~5.62~~	~~8.54~~	~~8.54~~
~~Max. assembly length[2] (in.)~~	~~102.5~~	~~176.8~~	~~176.8~~
~~Max. assembly weight[3] (lb.)~~	~~700~~	~~1680~~	~~1680~~
~~Max. active fuel length[2] (in.)~~	~~83~~	~~144~~	~~144~~
~~RADIOLOGICAL AND THERMAL CHARACTERISTICS:~~			
~~Max. heat generation (W)~~	~~95~~	~~710~~	~~500~~
~~Min. cooling time (yr)~~	~~10~~	~~8~~	~~9/20~~
~~Max. initial enrichment without soluble boron credit (wt.% ^{235}U)~~	~~4.0~~	~~See Table 2.1.3~~	~~N/A~~
~~Max. initial enrichment with soluble boron credit (wt.% ^{235}U)~~	~~N/A~~	~~5.0~~	~~5.0~~
~~Max. average burnup (MWD/MTU)~~	~~22,500~~	~~40,000~~	~~30,000/40,000~~

~~1 These are limiting values for all authorized fuel assembly array/classes. Refer to the Approved Contents section of Appendix B to the CoC for specific limits for each fuel assembly array/class.~~

~~2 Unirradiated nominal dimensions are shown.~~

~~3 Fuel assembly weight including non-fuel hardware and channels, as applicable, based on DOE MPC DPS [2.1.6].~~

Table 2.1.9

SUGGESTED PWR UPPER AND LOWER FUEL SPACER LENGTHS

Fuel Assembly Type	Assembly Length w/o NFH[1] (in.)	Location of Active Fuel from Bottom (in.)	Max. Active Fuel Length (in.)	Upper Fuel Spacer Length (in.)	Lower Fuel Spacer Length (in.)
CE 14x14	157	4.1	137	9.5	10.0
CE 16x16	176.8	4.7	150	0	0
BW 15x15	165.7	8.4	141.8	6.7	4.1
W 17x17 OFA	159.8	3.7	144	8.2	8.5
W 17x17 Std	159.8	3.7	144	8.2	8.5
W 17x17 V5H	160.1	3.7	144	7.9	8.5
W 15x15	159.8	3.7	144	8.2	8.5
W 14x14 Std	159.8	3.7	145.2	9.2	7.5
W 14x14 OFA	159.8	3.7	144	8.2	8.5
Ft. Calhoun	146	6.6	128	10.25	20.25
St. Lucie 2	158.2	5.2	136.7	10.25	8.05
B&W 15x15 SS	137.1	3.873	120.5	19.25	19.25
W 15x15 SS	137.1	3.7	122	19.25	19.25
W 14x14 SS	137.1	3.7	120	19.25	19.25
Indian Point 1	137.2	17.705	101.5	18.75	20.0

Note: Each user shall specify the fuel spacer length based on their fuel assembly length, presence of a DFC, and allowing an approximate two inch gap under the MPC lid. Fuel spacers shall be sized to ensure that the active fuel region of intact fuel assemblies remains within the ~~Boral~~ neutron poison region of the MPC basket with water in the MPC.

[1] NFH is an abbreviation for non-fuel hardware, including control components. Fuel assemblies with control components may require shorter fuel spacers.

Table 2.1.10

SUGGESTED BWR UPPER AND LOWER FUEL SPACER LENGTHS

Fuel Assembly Type	Assembly Length (in.)	Location of Active Fuel from Bottom (in.)	Max. Active Fuel Length (in.)	Upper Fuel Spacer Length (in.)	Lower Fuel Spacer Length (in.)
GE/2-3	171.2	7.3	150	4.8	0
GE/4-6	176.2	7.3	150	0	0
Dresden 1	134.4	11.2	110	18.0	28.0
Humboldt Bay	95.0	8.0	79	40.5	40.5
Dresden 1 Damaged Fuel or Fuel Debris	142.1†	11.2	110	17.0	16.9
Humboldt Bay Damaged Fuel or Fuel Debris	105.5†	8.0	79	35.25	35.25
LaCrosse	102.5	10.5	83	37.0	37.5

Note: Each user shall specify the fuel spacer length based on their fuel assembly length, presence of a DFC, and allowing an approximate two inch gap under the MPC lid. Fuel spacers shall be sized to ensure that the active fuel region of intact fuel assemblies remains within the ~~Boral~~ neutron poison region of the MPC basket with water in the MPC.

† Fuel assembly length includes the damaged fuel container.

Table 2.1.11
NORMALIZED DISTRIBUTION BASED ON BURNUP PROFILE

PWR DISTRIBUTION[1]		
Interval	**Axial Distance From Bottom of Active Fuel (% of Active Fuel Length)**	**Normalized Distribution**
1	0% to 4-1/6%	0.5485
2	4-1/6% to 8-1/3%	0.8477
3	8-1/3% to 16-2/3%	1.0770
4	16-2/3% to 33-1/3%	1.1050
5	33-1/3% to 50%	1.0980
6	50% to 66-2/3%	1.0790
7	66-2/3% to 83-1/3%	1.0501
8	83-1/3% to 91-2/3%	0.9604
9	91-2/3% to 95-5/6%	0.7338
10	95-5/6% to 100%	0.4670
BWR DISTRIBUTION[2]		
Interval	**Axial Distance From Bottom of Active Fuel (% of Active Fuel Length)**	**Normalized Distribution**
1	0% to 4-1/6%	0.2200
2	4-1/6% to 8-1/3%	0.7600
3	8-1/3% to 16-2/3%	1.0350
4	16-2/3% to 33-1/3%	1.1675
5	33-1/3% to 50%	1.1950
6	50% to 66-2/3%	1.1625
7	66-2/3% to 83-1/3%	1.0725
8	83-1/3% to 91-2/3%	0.8650
9	91-2/3% to 95-5/6%	0.6200
10	95-5/6% to 100%	0.2200

[1] Reference 2.1.7
[2] Reference 2.1.8

Table 2.1.12

DESIGN CHARACTERISTICS FOR THORIA RODS IN D-1 THORIA ROD CANISTERS

PARAMETER	MPC-68 or MPC-68F
Cladding Type	Zircaloy ~~(Zr)~~
Composition	98.2 wt.% ThO_2, 1.8 wt.% UO_2 with an enrichment of 93.5 wt. % ^{235}U
Number of Rods Per Thoria Canister	≤ 18
Decay Heat Per Thoria Canister	≤ 115 Watts
Post-Irradiation Fuel Cooling Time and Average Burnup Per Thoria Canister	Cooling time ≥ 18 years and average burnup ≤ 16,000 MWD/MTIHM
Initial Heavy Metal Weight	≤ 27 kg/canister
Fuel Cladding O.D.	≥ 0.412 inches
Fuel Cladding I.D.	≤ 0.362 inches
Fuel Pellet O.D.	≤ 0.358 inches
Active Fuel Length	≤ 111 inches
Canister Weight	≤ 550 lbs., including Thoria Rods
Canister Material	*Type 304 SS*

Table 2.1.13
MPC Fuel Loading Regions

MPC MODEL	REGION 1 FUEL STORAGE LOCATIONS*	REGION 2 FUEL STORAGE LOCATIONS
MPC-24, 24E and 24EF	9, 10, 15, and 16	All Other Locations
MPC-32/*32F*	7, 8, 12 through 15, 18 through 21, 25, and 26	All Other Locations
MPC-68/68F/68FF	11 through 14, 18 through 23, 27 through 32, 37 through 42, 46 through 51, 55 through 58	All Other Locations

*Note: Refer to Figures 1.2.2 through 1.2.4

Table 2.1.14

Soluble Boron Requirements for ~~PWR~~ *MPC-24/24E/24EF* Fuel Wet Loading and Unloading Operations

MPC MODEL	FUEL ASSEMBLY MAXIMUM AVERAGE ENRICHMENT (wt % ^{235}U)	MINIMUM SOLUBLE BORON CONCENTRATION (ppmb)
MPC-24	All fuel assemblies with initial enrichment† less than the prescribed value for soluble boron credit	0
MPC-24	One or more fuel assemblies with an initial enrichment† greater than or equal to the prescribed value for no soluble boron credit ~~AND~~*and* ≤ 5.0 wt. %	≥ 400
MPC-24E/24EF	All fuel assemblies with initial enrichment† less than the prescribed value for soluble boron credit	0
MPC-24E/24EF	*All fuel assemblies classified as intact fuel assemblies and* ~~O~~ one or more fuel assemblies with an initial enrichment† greater than or equal to the prescribed value for no soluble boron credit ~~AND~~*and* ≤ 5.0 wt. %	≥ 300
MPC-24E/24EF	*One or more fuel assemblies classified as damaged fuel or fuel debris and one or more fuel assemblies with initial enrichment > 4.0 wt.% and ≤ 5.0 wt.%*	*≥ 600*
~~MPC-32~~	~~All fuel assemblies with initial enrichment ≤ 4.1 wt. %~~	~~≥ 1900~~
~~MPC-32~~	~~One or more fuel assemblies with an initial enrichment > 4.1 and ≤ 5.0 wt. %~~	~~≥ 2600~~

Table 2.1.15

MINIMUM BORAL ^{10}B LOADING IN NEUTRON ABSORBER PANELS

MPC MODEL	MINIMUM ~~B-10~~ *^{10}B* LOADING (g/cm^2)	
	Boral Neutron Absorber Panels	***METAMIC Neutron Absorber Panels***
MPC-24	0.0267	*0.0223*
MPC-24E and MPC-24EF	0.0372	*0.0310*
MPC-32/*32F*	0.0372	*0.0310*
MPC-68 and MPC-68FF	0.0372	*0.0310*
MPC-68F	0.01	*N/A (Note 1)*

Notes:

1. All MPC-68F canisters are equipped with Boral neutron absorber panels.

Table 2.1.16

Soluble Boron Requirements for MPC-32 and MPC-32F Wet Loading and Unloading Operations

Fuel Assembly Array/Class	All Intact Fuel Assemblies		One or More Damaged Fuel Assemblies or Fuel Debris	
	Initial Enrichment ≤ 4.1 wt.% ^{235}U (ppmb)	Initial Enrichment ≤ 5.0 wt.% ^{235}U (ppmb)	Initial Enrichment ≤ 4.1 wt.% ^{235}U (ppmb)	Initial Enrichment ≤ 5.0 wt.% ^{235}U (ppmb)
14x14A/B/C/D/E	1,300	1,900	1,500	2,300
15x15A/B/C/G	1,800	2,500	1,900	2,700
15x15D/E/F/H	1,900	2,600	2,100	2,900
16x16A	1,300	1,900	1,500	2,300
17x17A/B/C	1,900	2,600	2,100	2,900

Table 2.1.17

LIMITS FOR MATERIAL TO BE STORED IN MPC-24

PARAMETER	*VALUE*
Fuel Type	*Uranium oxide, PWR intact fuel assemblies meeting the limits in Table 2.1.3 for the applicable array/class*
Cladding Type	*ZR or Stainless Steel (SS) as specified in Table 2.1.3 for the applicable array/class*
Maximum Initial Enrichment per Assembly	*As specified in Table 2.1.3 for the applicable array/class*
Post-irradiation Cooling Time and Average Burnup per Assembly	*ZR clad: As specified in Section 2.1.9.1* *SS clad: ≥ 8 years and ≤ 40,000 MWD/MTU*
Decay Heat Per Assembly	*ZR clad: As specified in Section 2.1.9.1* *SS clad: ≤ 500 Watts*
Non-Fuel Hardware Burnup and Cooling Time	*As specified in Table 2.1.25*
Fuel Assembly Length	*≤ 176.8 in. (nominal design)*
Fuel Assembly Width	*≤ 8.54 in. (nominal design)*
Fuel Assembly Weight	*≤ 1,680 lbs (including non-fuel hardware)*
Other Limitations	▪ *Quantity is limited to up to 24 PWR intact fuel assemblies.* ▪ *Neutron sources, damaged fuel assemblies and fuel debris are not permitted for storage in MPC-24.* ▪ *BPRAs, TPDs, WABAs, water displacement guide tube plugs, orifice rod assemblies, and/or vibration suppressor inserts may be stored with fuel assemblies in any fuel cell location.* ▪ *CRAs, RCCAs, CEAs, and/or APSRs may be stored with fuel assemblies in fuel cell locations 9, 10, 15, and/or 16* ▪ *Soluble boron requirements during wet loading and unloading are specified in Table 2.1.14.*

Table 2.1.18

LIMITS FOR MATERIAL TO BE STORED IN MPC-68

PARAMETER	*VALUE (Note 1)*			
Fuel Type(s)	*Uranium oxide, BWR intact fuel assemblies meeting the limits in Table 2.1.4 for the applicable array/class, with or without channels*	*Uranium oxide, BWR damaged fuel assemblies meeting the limits in Table 2.1.4 for the applicable array/class, with or without channels, placed in Damaged Fuel Containers (DFCs)*	*Mixed Oxide (MOX) BWR intact fuel assemblies meeting the limits in Table 2.1.4 for array/class 6x6B, with or without channels*	*Mixed Oxide (MOX) BWR damaged fuel assemblies meeting the limits in Table 2.1.4 for array/class 6x6B, with or without channels, placed in Damaged Fuel Containers (DFCs)*
Cladding Type	*ZR or Stainless Steel (SS) as specified in Table 2.1.4 for the applicable array/class*	*ZR or Stainless Steel (SS) as specified in Table 2.1.4 for the applicable array/class*	*ZR*	*ZR*
Maximum Initial Planar-Average Enrichment per Assembly and Rod Enrichment	*As specified in Table 2.1.4 for the applicable array/class*	*Planar Average:* *$\leq$ 2.7 wt% ^{235}U for array/classes 6x6A, 6x6C, 7x7A, and 8x8A;* *$\leq$ 4.0 wt% ^{235}U for all other array/classes* *Rod:* *As specified in Table 2.1.4*	*As specified in Table 2.1.4 for array/class 6x6B*	*As specified in Table 2.1.4 for array/class 6x6B*

Table 2.1.18 (cont'd)

LIMITS FOR MATERIAL TO BE STORED IN MPC-68

PARAMETER	*VALUE (Note 1)*			
Post-irradiation Cooling Time and Average Burnup per Assembly	*ZR clad: As specified in Section 2.1.9.1; except as provided in Notes 2 and 3.* *SS clad: Note 4*	*ZR clad: As specified in Section 2.1.9.1; except as provided in Notes 2 and 3.* *SS clad: Note 4.*	*Cooling time ≥ 18 years and average burnup ≤ 30,000 MWD/MTIHM.*	*Cooling time ≥ 18 years and average burnup ≤ 30,000 MWD/MTIHM.*
Decay Heat Per Assembly	*ZR clad: As specified in Section 2.1.9.1; except as provided in Notes 2 and 3.* *SS clad: ≤ 95 Watts*	*ZR clad: As specified in Section 2.1.9.1; except as provided in Notes 2 and 3.* *SS clad: ≤ 95 Watts*	*≤ 115 Watts*	*≤ 115 Watts*
Fuel Assembly Length	*Array/classes 6x6A, 6x6C, 7x7A, and 8x8A: ≤ 135.0 in. (nominal design)* *All Other array/classes: ≤ 176.2 in. (nominal design)*	*Array/classes 6x6A, 6x6C, 7x7A, and 8x8A: ≤ 135.0 in. (nominal design)* *All Other array/classes: ≤ 176.2 in. (nominal design)*	*≤ 135.0 in. (nominal design)*	*≤ 135.0 in. (nominal design)*
Fuel Assembly Width	*≤ 5.85 in. (nominal design)*	*Array/classes 6x6A, 6x6C, 7x7A, and 8x8A: ≤ 4.7 in. (nominal design)* *All Other array/classes: ≤ 5.85 in. (nominal design)*	*≤ 4.70 in. (nominal design)*	*≤ 4.70 in. (nominal design)*

Table 2.1.18 (cont'd)

LIMITS FOR MATERIAL TO BE STORED IN MPC-68

PARAMETER	*VALUE (Note 1)*			
Fuel Assembly Weight	*≤ 700 lbs. (including channels)*	*Array/classes 6x6A, 6x6C, 7x7A, and 8x8A: ≤ 550 lbs. (including channels and DFC)* *All Other array/classes: ≤ 700 lbs. (including channels and DFC)*	*≤ 400 lbs, including channels*	*≤ 550 lbs, including channels and DFC*
Other Limitations	▪ *Quantity is limited to up to one (1) Dresden Unit 1 thoria rod canister meeting the specifications listed in Table 2.1.12 plus any combination of Dresden Unit 1 or Humboldt Bay damaged fuel assemblies in DFCs and intact fuel assemblies up to a total of 68.* ▪ *Up to 16 damaged fuel assemblies from plants other than Dresden Unit 1 or Humboldt Bay may be stored in DFCs in fuel cell locations 1, 2, 3, 8, 9, 16, 25, 34, 35, 44, 53, 60, 61, 66, 67, and/or 68, with the balance comprised of intact fuel assemblies up to a total of 68* ▪ *SS-clad fuel assemblies with stainless steel channels must be stored in fuel cell locations 19 through 22, 28 through 31, 38 through 41, and/or 47 through 50.* ▪ *Dresden Unit 1 fuel assemblies with one antimony-beryllium neutron source are permitted. The antimony-beryllium neutron source material shall be in a water rod location.* ▪ *Fuel debris is not permitted for storage in MPC-68.*			

Notes:

1. *A fuel assembly must meet the requirements of any one column and the other limitations to be authorized for storage.*

2. *Array/class 6x6A, 6x6C, 7x7A, and 8x8A fuel assemblies shall have a cooling time ≥ 18 years, an average burnup ≤ 30,000 MWD/MTU, and a maximum decay heat ≤ 115 Watts.*

3. *Array/class 8x8F fuel assemblies shall have a cooling time ≥ 10 years, an average burnup ≤ 27,500 MWD/MTU, and a maximum decay ≤ 183.5 Watts.*

4. *SS-clad fuel assemblies shall have a cooling time ≥ 10 years, and an average burnup ≤ 22,500 MWD/MTU.*

Table 2.1.19

LIMITS FOR MATERIAL TO BE STORED IN MPC-68F

PARAMETER	*VALUE (Notes 1 and 2)*			
Fuel Type(s)	*Uranium oxide, BWR intact fuel assemblies meeting the limits in Table 2.1.4 for array/class 6x6A, 6x6C, 7x7A, or 8x8A, with or without Zircaloy channels*	*Uranium oxide, BWR damaged fuel assemblies or fuel debris meeting the limits in Table 2.1.4 for array/class 6x6A, 6x6C, 7x7A, or 8x8A, with or without Zircaloy channels, placed in Damaged Fuel Containers(DFCs)*	*Mixed Oxide (MOX) BWR intact fuel assemblies meeting the limits in Table 2.1.4 for array/class 6x6B, with or without Zircaloy channels*	*Mixed Oxide (MOX) BWR damaged fuel assemblies or fuel debris meeting the limits in Table 2.1.4 for array/class 6x6B, with or without Zircaloy channels, placed in Damaged Fuel Containers (DFCs))*
Cladding Type	*ZR*	*ZR*	*ZR*	*ZR*
Maximum Initial Planar-Average Enrichment per Assembly and Rod Enrichment	*As specified in Table 2.1.4 for the applicable array/class*	*As specified in Table 2.1.4 for the applicable array/class*	*As specified in Table 2.1.4 for array/class 6x6B*	*As specified in Table 2.1.4 for array/class 6x6B*
Post-irradiation Cooling Time, Average Burnup, and Minimum Initial Enrichment per Assembly	*Cooling time ≥ 18 years and average burnup ≤ 30,000 MWD/MTU.*	*Cooling time ≥ 18 years and average burnup ≤ 30,000 MWD/MTU.*	*Cooling time ≥ 18 years and average burnup ≤ 30,000 MWD/MTIHM.*	*Cooling time ≥ 18 years and average burnup ≤ 30,000 MWD/MTIHM.*
Decay Heat Per Assembly	*≤ 115 Watts*	*≤ 115 Watts*	*≤ 115 Watts*	*≤ 115 Watts*
Fuel Assembly Length	*≤ 135.0 in. (nominal design)*	*≤ 135.0 in. (nominal design)*	*≤ 135.0 in. (nominal design)*	*≤ 135.0 in. (nominal design)*
Fuel Assembly Width	*≤ 4.70 in. (nominal design)*	*≤ 4.70 in. (nominal design)*	*≤ 4.70 in. (nominal design)*	*≤ 4.70 in. (nominal design)*
Fuel Assembly Weight	*≤ 400 lbs, (including channels)*	*≤ 550 lbs, (including channels and DFC)*	*≤ 400 lbs, (including channels)*	*≤ 550 lbs, (including channels and DFC)*

Table 2.1.19 (cont'd)

LIMITS FOR MATERIAL TO BE STORED IN MPC-68F

PARAMETER	*VALUE*
Other Limitations	▪ *Quantity is limited to up to four (4) DFCs containing Dresden Unit 1 or Humboldt Bay uranium oxide or MOX fuel debris. The remaining fuel storage locations may be filled with array/class 6x6A, 6x6B, 6x6C, 7x7A, and 8x8A fuel assemblies of the following type, as applicable:* *- uranium oxide BWR intact fuel assemblies* *- MOX BWR intact fuel assemblies* *- uranium oxide BWR damaged fuel assemblies in DFCs* *- MOX BWR damaged fuel assemblies in DFCs* *- up to one (1) Dresden Unit 1 thoria rod canister meeting the specifications listed in Table 2.1.12.* ▪ *Stainless steel channels are not permitted.* ▪ *Dresden Unit 1 fuel assemblies with one antimony-beryllium neutron source are permitted. The antimony-beryllium neutron source material shall be in a water rod location.*

Notes:

1. *A fuel assembly must meet the requirements of any one column and the other limitations to be authorized for storage.*

2. *Only fuel from the Dresden Unit 1 and Humboldt Bay plants are permitted for storage in the MPC-68F.*

Table 2.1.20

LIMITS FOR MATERIAL TO BE STORED IN MPC-24E

PARAMETER	*VALUE (Note 1)*	
Fuel Type	*Uranium oxide PWR intact fuel assemblies meeting the limits in Table 2.1.3 for the applicable array/class*	*Uranium oxide PWR damaged fuel assemblies meeting the limits in Table 2.1.3 for the applicable array/class, placed in a Damaged Fuel Container (DFC)*
Cladding Type	*ZR or Stainless Steel (SS) assemblies as specified in Table 2.1.3 for the applicable array/class*	*ZR or Stainless Steel (SS) assemblies as specified in Table 2.1.3 for the applicable array/class*
Maximum Initial Enrichment per Assembly	*As specified in Table 2.1.3 for the applicable array/class*	*As specified in Table 2.1.3 for the applicable array/class*
Post-irradiation Cooling Time, and Average Burnup per Assembly	*ZR clad: As specified in Section 2.1.9.1* *SS clad: ≥ 8 yrs and ≤ 40,000 MWD/MTU*	*ZR clad: As specified in Section 2.1.9.1* *SS clad: ≥ 8 yrs and ≤ 40,000 MWD/MTU*
Decay Heat Per Assembly	*ZR clad: As specified in Section 2.1.9.1* *SS clad: ≤ 710 Watts*	*ZR clad: As specified in Section 2.1.9.1* *SS clad: ≤ 710 Watts*
Non-fuel hardware post-irradiation Cooling Time and Burnup	*As specified in Table 2.1.25*	*As specified in Table 2.1.25*
Fuel Assembly Length	*≤ 176.8 in. (nominal design)*	*≤ 176.8 in. (nominal design)*
Fuel Assembly Width	*≤ 8.54 in. (nominal design)*	*≤ 8.54 in. (nominal design)*
Fuel Assembly Weight	*≤ 1680 lbs (including non-fuel hardware)*	*≤ 1680 lbs (including DFC and non-fuel hardware)*

Table 2.1.20 (cont'd)

LIMITS FOR MATERIAL TO BE STORED IN MPC-24E

PARAMETER	*VALUE*
Other Limitations	▪ *Quantity is limited to up to 24 PWR intact fuel assemblies or up to four (4) damaged fuel assemblies in DFCs may be stored in fuel storage locations 3, 6, 19, and/or 22. The remaining fuel storage locations may be filled with intact fuel assemblies.* ▪ *Fuel debris and neutron sources are not authorized for storage in the MPC-24E.* ▪ *BPRAs, TPDs, WABAs, water displacement guide tube plugs, orifice rod assemblies, and/or vibration suppressor inserts may be stored with fuel assemblies in any fuel cell location.* ▪ *CRAs, RCCAs, CEAs, and/or APSRs may be stored with fuel assemblies in fuel cell locations 9, 10, 15, and/or 16.* ▪ *Soluble boron requirements during wet loading and unloading are specified in Table 2.1.14.*

Notes:

1. *A fuel assembly must meet the requirements of any one column and the other limitations to be authorized for storage.*

Table 2.1.21

LIMITS FOR MATERIAL TO BE STORED IN MPC-32

PARAMETER	*VALUE (Note 1)*	
Fuel Type	*Uranium oxide, PWR intact fuel assemblies meeting the limits in Table 2.1.3 for the applicable fuel assembly array/class.*	*Uranium oxide, PWR damaged fuel assemblies meeting the limits in Table 2.1.3 for the applicable fuel assembly array/class.*
Cladding Type	*ZR or Stainless Steel (SS) assemblies as specified in Table 2.1.3 for the applicable array/class*	*ZR or Stainless Steel (SS) assemblies as specified in Table 2.1.3 for the applicable array/class*
Maximum Initial Enrichment per Assembly	*As specified in Table 2.1.3 for the applicable fuel assembly array/class*	*As specified in Table 2.1.3 for the applicable fuel assembly array/class*
Post-irradiation Cooling Time and Average Burnup per Assembly	*ZR clad: As specified in Section 2.1.9.1* *SS clad: ≥ 9 years and ≤ 30,000 MWD/MTU or ≥ 10 years and ≤ 40,000 MWD/MTU*	*ZR clad: As specified in Section 2.1.9.1* *SS clad: ≥ 9 years and ≤ 30,000 MWD/MTU or ≥ 10 years and ≤ 40,000 MWD/MTU*
Decay Heat Per Assembly	*ZR-clad: As specified in Section 2.1.9.1* *SS-clad: ≤ 500 Watts*	*ZR-clad: As specified in Section 2.1.9.1* *SS-clad: ≤ 500 Watts*
Non-fuel hardware post-irradiation cooling time and burnup	*As specified in Table 2.1.25*	*As specified in Table 2.1.25*
Fuel Assembly Length	*≤ 176.8 in. (nominal design)*	*≤ 176.8 in. (nominal design)*
Fuel Assembly Width	*≤ 8.54 in. (nominal design)*	*≤ 8.54 in. (nominal design)*
Fuel Assembly Weight	*≤ 1,680 lbs (including non-fuel hardware)*	*≤ 1,680 lbs (including DFC and non-fuel hardware)*

Table 2.1.21 (cont'd)

LIMITS FOR MATERIAL TO BE STORED IN MPC-32

PARAMETER	*VALUE*
Other Limits	▪ *Quantity is limited to up to 32 PWR intact fuel assemblies and/or up to eight (8) damaged fuel assemblies in DFCs in fuel cell locations 1, 4, 5, 10, 23, 28, 29, and/or 32, with the balance intact fuel assemblies up to a total of 32.* ▪ *Fuel debris and neutron sources are not permitted for storage in MPC-32.* ▪ *BPRAs, TPDs, WABAs, water displacement guide tube plugs, orifice rod assemblies, and/or vibration suppressor inserts may be stored with fuel assemblies in any fuel cell location.* ▪ *CRAs, RCCAs, CEAs, and/or APSRs may be stored with fuel assemblies in fuel cell locations 13, 14, 19, and/or 20.* ▪ *Soluble boron requirements during wet loading and unloading are specified in Table 2.1.16.*

NOTES:

1. *A fuel assembly must meet the requirements of any one column and the other limitations to be authorized for storage.*

Table 2.1.22

LIMITS FOR MATERIAL TO BE STORED IN MPC-68FF

PARAMETER	*VALUE (Note 1)*	
Fuel Type	*Uranium oxide or MOX BWR intact fuel assemblies meeting the limits in Table 2.1.4 for the applicable array/class, with or without channels.*	*Uranium oxide or MOX BWR damaged fuel assemblies or fuel debris meeting the limits in Table 2.1.4 for the applicable array/class, with or without channels, in DFCs.*
Cladding Type	*ZR or Stainless Steel (SS) assemblies as specified in Table 2.1.4 for the applicable array/class*	*ZR or Stainless Steel (SS) assemblies as specified in Table 2.1.4 for the applicable array/class*
Maximum Initial Planar Average Enrichment per Assembly and Rod Enrichment	*As specified in Table 2.1.4 for the applicable fuel assembly array/class*	*Planar Average:* *≤ 2.7 wt% ^{235}U for array/classes 6x6A, 6x6B, 6x6C, 7x7A, and 8x8A;* *≤ 4.0 wt% ^{235}U for all other array/classes* *Rod:* *As specified in Table 2.1.4*
Post-irradiation cooling time and average burnup per Assembly	*ZR clad: As specified in Section 2.1.9.1; except as provided in Notes 2 and 3.* *SS clad: Note 4*	*ZR clad: As specified in Section 2.1.9.1; except as provided in Notes 2 and 3.* *SS clad: Note 4.*
Decay Heat Per Assembly	*ZR clad: As specified in Section 2.1.9.1; except as provided in Notes 2 and 3.* *SS clad: ≤ 95 Watts*	*ZR clad: As specified in Section 2.1.9.1; except as provided in Notes 2 and 3.* *SS clad: ≤ 95 Watts*
Fuel Assembly Length	*Array/classes 6x6A, 6x6B, 6x6C, 7x7A, and 8x8A: ≤ 135.0 in. (nominal design)* *All Other array/classes: ≤ 176.2 in. (nominal design)*	*Array/classes 6x6A,6x6B, 6x6C, 7x7A, and 8x8A: ≤ 135.0 in. (nominal design)* *All Other array/classes: ≤ 176.2 in. (nominal design)*

Table 2.1.22 (cont'd)

LIMITS FOR MATERIAL TO BE STORED IN MPC-68FF

PARAMETER	*VALUE (Note 1)*	
Fuel Assembly Width	*Array/classes 6x6A, 6x6B, 6x6C, 7x7A, and 8x8A: ≤ 4.7 in. (nominal design)* *All Other array/classes:* *≤ 5.85 in. (nominal design)*	*Array/classes 6x6A, 6x6B, 6x6C, 7x7A, and 8x8A: ≤ 4.7 in. (nominal design)* *All Other array/classes:* *≤ 5.85 in. (nominal design)*
Fuel Assembly Weight	*Array/classes 6x6A, 6x6B, 6x6C, 7x7A, and 8x8A: ≤ 400 lbs. (including channels)* *All Other array/classes:* *≤ 550 lbs. (including channels)*	*Array/classes 6x6A, 6x6B, 6x6C, 7x7A, and 8x8A: ≤ 550 lbs. (including channels and DFC)* *All Other array/classes:* *≤ 700 lbs. (including channels and DFC)*
Other Limitations	▪ *Quantity is limited to up to one (1) Dresden Unit 1 thoria rod canister meeting the specifications listed in Table 2.1.12 plus up to eight (8) Dresden Unit 1 or Humboldt Bay fuel assemblies classified as fuel debris in DFCs, and any combination of Dresden Unit 1 or Humboldt Bay damaged fuel assemblies in DFCs and intact fuel assemblies up to a total of 68.* ▪ *Up to 16 damaged fuel assemblies and/or up to eight (8) fuel assemblies classified as fuel debris from plants other than Dresden Unit 1 or Humboldt Bay may be stored in DFCs in MPC-68FF. DFCs shall be located only in fuel cell locations 1, 2, 3, 8, 9, 16, 25, 34, 35, 44, 53, 60, 61, 66, 67, and/or 68, with the balance comprised of intact fuel assemblies meeting the above specifications, up to a total of 68.* ▪ *SS-clad fuel assemblies with stainless steel channels must be stored in fuel cell locations 19 through 22, 28 through 31, 38 through 41, and/or 47 through 50.* ▪ *Dresden Unit 1 fuel assemblies with one antimony-beryllium neutron source are permitted. The antimony-beryllium neutron source material shall be in a water rod location.*	

NOTES:

1. *A fuel assembly must meet the requirements of any one column and the other limitations to be authorized for storage.*

2. *Array/class 6x6A, 6x6B, 6x6C, 7x7A, and 8x8A fuel assemblies shall have a cooling time ≥ 18 years, an average burnup ≤ 30,000 MWD/MTU, and a maximum decay heat ≤ 115 Watts.*

3. *Array/class 8x8F fuel assemblies shall have a cooling time ≥ 10 years, an average burnup ≤ 27,500 MWD/MTU, and a maximum decay ≤ 183.5 Watts.*

4. *SS-clad fuel assemblies shall have a cooling time ≥ 10 years, and an average burnup ≤ 22,500 MWD/MTU.*

Table 2.1.23

LIMITS FOR MATERIAL TO BE STORED IN MPC-24EF

PARAMETER	*VALUE (Note 1)*	
Fuel Type	*Uranium oxide PWR intact fuel assemblies meeting the limits in Table 2.1.3 for the applicable array/class*	*Uranium oxide PWR damaged fuel assemblies and/or fuel debris meeting the limits in Table 2.1.3 for the applicable array/class, placed in a Damaged Fuel Container (DFC)*
Cladding Type	*ZR or Stainless Steel (SS) assemblies as specified in Table 2.1.3 for the applicable array/class*	*ZR or Stainless Steel (SS) assemblies as specified in Table 2.1.3 for the applicable array/class*
Maximum Initial Enrichment per Assembly	*As specified in Table 2.1.3 for the applicable array/class*	*As specified in Table 2.1.3 for the applicable array/class*
Post-irradiation Cooling Time, and Average Burnup per Assembly	*ZR clad: As specified in Section 2.1.9.1* *SS clad: ≥ 8 yrs and ≤ 40,000 MWD/MTU*	*ZR clad: As specified in Section 2.1.9.1* *SS clad: ≥ 8 yrs and ≤ 40,000 MWD/MTU*
Decay Heat Per Assembly	*ZR clad: As specified in Section 2.1.9.1* *SS clad: ≤ 710 Watts*	*ZR clad: As specified in Section 2.1.9.1* *SS clad: ≤ 710 Watts*
Non-fuel hardware post-irradiation Cooling Time and Burnup	*As specified in Table 2.1.25*	*As specified in Table 2.1.25*
Fuel Assembly Length	*≤ 176.8 in. (nominal design)*	*≤ 176.8 in. (nominal design)*
Fuel Assembly Width	*≤ 8.54 in. (nominal design)*	*≤ 8.54 in. (nominal design)*
Fuel Assembly Weight	*≤ 1680 lbs (including non-fuel hardware)*	*≤ 1680 lbs (including DFC and non-fuel hardware)*

Table 2.1.23 (cont'd)

LIMITS FOR MATERIAL TO BE STORED IN MPC-24EF

PARAMETER	*VALUE*
Other Limitations	▪ *Quantity per MPC: up to 24 PWR intact fuel assemblies or up to four (4) damaged fuel assemblies and/or fuel classified as fuel debris in DFCs may be stored in fuel storage locations 3, 6, 19, and/or 22. The remaining fuel storage locations may be filled with intact fuel assemblies.* ▪ *Neutron sources are not authorized for storage in the MPC-24EF.* ▪ *BPRAs, TPDs, WABAs, water displacement guide tube plugs, orifice rod assemblies, and/or vibration suppressor inserts may be stored with fuel assemblies in any fuel cell location.* ▪ *CRAs, RCCAs, CEAs, and/or APSRs may be stored with fuel assemblies in fuel cell locations 9, 10, 15, and/or 16.* ▪ *Soluble boron requirements during wet loading and unloading are specified in Table 2.1.14.*

Notes:

1. *A fuel assembly must meet the requirements of any one column and the other limitations to be authorized for storage.*

Table 2.1.24

LIMITS FOR MATERIAL TO BE STORED IN MPC-32F

PARAMETER	*VALUE (Note 1)*	
Fuel Type	*Uranium oxide, PWR intact fuel assemblies meeting the limits in Table 2.1.3 for the applicable fuel assembly array/class*	*Uranium oxide, PWR damaged fuel assemblies and fuel debris in DFCs meeting the limits in Table 2.1.3 for the applicable fuel assembly array/class*
Cladding Type	*ZR or Stainless Steel (SS) as specified in Table 2.1.3 for the applicable fuel assembly array/class*	*ZR or Stainless Steel (SS) as specified in Table 2.1.3 for the applicable fuel assembly array/class*
Maximum Initial Enrichment per Assembly	*As specified in Table 2.1.3*	*As specified in Table 2.1.3*
Post-irradiation Cooling Time, Average Burnup, and Minimum Initial Enrichment per Assembly	*ZR clad: As specified in Section 2.1.9.1* *SS clad: ≥ 8 years and ≤ 40,000 MWD/MTU*	*ZR clad: As specified in Section 2.1.9.1* *SS clad: ≥ 8 years and ≤ 40,000 MWD/MTU*
Decay Heat Per Assembly	*ZR clad: As specified in Section 2.1.9.1* *SS clad: ≤ 710 Watts*	*ZR clad: As specified in Section 2.1.9.1* *SS clad: ≤ 710 Watts*
Non-fuel hardware post-irradiation Cooling Time and Burnup	*As specified in Table 2.1.25*	*As specified in Table 2.1.25*
Fuel Assembly Length	*≤ 176.8 in. (nominal design)*	*≤ 176.8 in. (nominal design)*
Fuel Assembly Width	*≤ 8.54 in. (nominal design)*	*≤ 8.54 in. (nominal design)*
Fuel Assembly Weight	*≤ 1,680 lbs (including non-fuel hardware)*	*≤ 1,680 lbs (including DFC and non-fuel hardware)*

Table 2.1.24 (cont'd)

LIMITS FOR MATERIAL TO BE STORED IN MPC-32F

PARAMETER	*VALUE*
Other Limitations	▪ *Quantity is limited to up to 32 PWR intact fuel assemblies and/or up to eight (8) damaged fuel assemblies in DFCs in fuel cell locations 1, 4, 5, 10, 23, 28, 29, and/or 32, with the balance intact fuel assemblies up to a total of 32.* ▪ *Neutron sources are not permitted for storage in MPC-32.* ▪ *BPRAs, TPDs, WABAs, water displacement guide tube plugs, orifice rod assemblies, and/or vibration suppressor inserts may be stored with fuel assemblies in any fuel cell location.* ▪ *CRAs, RCCAs, CEAs, and/or APSRs may be stored with fuel assemblies in fuel cell locations 13, 14, 19, and/or 20.* ▪ *Soluble boron requirements during wet loading and unloading are specified in Table 2.1.16.*

NOTES:

1. *A fuel assembly must meet the requirements of any one column and the other limitations to be authorized for storage.*

Table 2.1.25

NON-FUEL HARDWARE BURNUP AND COOLING TIME LIMITS (Notes 1, 2, and 3)

Post-irradiation Cooling Time (yrs)	*Inserts (Note 4) Maximum Burnup (MWD/MTU)*	*Guide Tube Hardware (Note 5) Maximum Burnup (MWD/MTU)*	*Control Component (Note 6) Maximum Burnup (MWD/MTU)*	*APSR Maximum Burnup (MWD/MTU)*
≥ 3	≤ 24,635	N/A (Note 7)	N/A	N/A
≥ 4	≤ 30,000	≤ 20,000	N/A	N/A
≥ 5	≤ 36,748	≤ 25,000	≤ 630,000	≤ 45,000
≥ 6	≤ 44,102	≤ 30,000	-	≤ 54,500
≥ 7	≤ 52,900	≤ 40,000	-	≤ 68,000
≥ 8	≤ 60,000	≤ 45,000	-	≤ 83,000
≥ 9	-	≤ 50,000	-	≤ 111,000
≥ 10	-	≤ 60,000	-	≤ 180,000
≥ 11	-	≤ 75,000	-	≤ 630,000
≥ 12	-	≤ 90,000	-	-
≥ 13	-	≤ 180,000	-	-
≥ 14	-	≤ 630,000	-	-

NOTES:

1. *Burnups for non-fuel hardware are to be determined based on the burnup and uranium mass of the fuel assemblies in which the component was inserted during reactor operation.*

2. *Linear interpolation between points is permitted, except that TPD and APSR burnups > 180,000 MWD/MTU and ≤ 630,000 MWD/MTU must be cooled ≥ 14 years and ≥ 11 years, respectively.*

3. *Applicable to uniform loading and regionalized loading.*

4. *Includes Burnable Poison Rod Assemblies (BPRAs), Wet Annular Burnable Absorbers (WABAs), and vibration suppressor inserts.*

5. *Includes Thimble Plug Devices (TPDs), water displacement guide tube plugs, and orifice rod assemblies.*

6. *Includes Control Rod Assemblies (CRAs), Control Element Assemblies (CEAs), and Rod Cluster Control Assemblies (RCCAs).*

7. *N/A means not authorized for loading at this cooling time.*

Table 2.1.26

MAXIMUM ALLOWABLE DECAY HEAT PER FUEL ASSEMBLY (UNIFORM LOADING, ZR-CLAD)

MPC Model	*Decay Heat per Fuel Assembly (kW)*
MPC-24/24E/24EF	$\leq$ *1.583*
MPC-32/32F	$\leq$ *1.1875*
MPC-68/68FF	$\leq$ *0.522*

Table 2.1.27

MPC FUEL STORAGE REGIONS AND MAXIMUM DECAY HEAT

MPC Model	*Number of Fuel Storage Locations in Region 1* ($N_{Region\ 1}$)	*Number of Fuel Storage Locations in Region 2* ($N_{Region\ 2}$)	*Maximum Decay Heat per MPC, Q (kW)*
MPC-24/24E/24EF	*4*	*20*	*38*
MPC-32/32F	*12*	*20*	*38*
MPC-68/68FF	*32*	*36*	*35.5*

Table 2.1.28

PWR FUEL ASSEMBLY COOLING TIME-DEPENDENT COEFFICIENTS (ZR-CLAD FUEL)

Cooling Time (years)	Array/Class 14x14A						
	A	B	C	D	E	F	G
≥ 3	20277.1	303.592	-68.329	-139.41	2993.67	-498.159	-615.411
≥ 4	35560.1	-6034.67	985.415	-132.734	3578.92	-723.721	-609.84
≥ 5	48917.9	-14499.5	2976.09	-150.707	4072.55	-892.691	-54.8362
≥ 6	59110.3	-22507	5255.61	-177.017	4517.03	-1024.01	613.36
≥ 7	67595.6	-30158.1	7746.6	-200.128	4898.71	-1123.21	716.004
≥ 8	74424.9	-36871.1	10169.4	-218.676	5203.64	-1190.24	741.163
≥ 9	81405.8	-44093.1	12910.8	-227.916	5405.34	-1223.27	250.224
≥ 10	86184.3	-49211.7	15063.4	-237.641	5607.96	-1266.21	134.435
≥ 11	92024.9	-55666.8	17779.6	-240.973	5732.25	-1282.12	-401.456
≥ 12	94775.8	-58559.7	19249.9	-246.369	5896.27	-1345.42	-295.435
≥ 13	100163	-64813.8	22045.1	-242.572	5861.86	-1261.66	-842.159
≥ 14	103971	-69171	24207	-242.651	5933.96	-1277.48	-1108.99
≥ 15	108919	-75171.1	27152.4	-243.154	6000.2	-1301.19	-1620.63
≥ 16	110622	-76715.2	28210.2	-240.235	6028.33	-1307.74	-1425.5
≥ 17	115582	-82929.7	31411.9	-235.234	5982.3	-1244.11	-1948.05
≥ 18	119195	-87323.5	33881.4	-233.28	6002.43	-1245.95	-2199.41
≥ 19	121882	-90270.6	35713.7	-231.873	6044.42	-1284.55	-2264.05
≥ 20	124649	-93573.5	37853.1	-230.22	6075.82	-1306.57	-2319.63

Table 2.1.28 (cont'd)

PWR FUEL ASSEMBLY COOLING TIME-DEPENDENT COEFFICIENTS (ZR-CLAD FUEL)

Cooling Time (years)	Array/Class 14x14B						
	A	B	C	D	E	F	G
≥ 3	18937.9	70.2997	-28.6224	-130.732	2572.36	-383.393	-858.17
≥ 4	32058.7	-4960.63	745.224	-125.978	3048.98	-551.656	-549.108
≥ 5	42626.3	-10804.1	1965.09	-139.722	3433.49	-676.643	321.88
≥ 6	51209.6	-16782.3	3490.45	-158.929	3751.01	-761.524	847.282
≥ 7	57829.9	-21982	5009.12	-180.026	4066.65	-846.272	1200.45
≥ 8	62758	-26055.3	6330.88	-196.804	4340.18	-928.336	1413.17
≥ 9	68161.4	-30827.6	7943.87	-204.454	4500.52	-966.347	1084.69
≥ 10	71996.8	-34224.3	9197.25	-210.433	4638.94	-1001.83	1016.38
≥ 11	75567.3	-37486.1	10466.9	-214.95	4759.55	-1040.85	848.169
≥ 12	79296.7	-40900.3	11799.6	-212.898	4794.13	-1040.51	576.242
≥ 13	82257.3	-43594	12935	-212.8	4845.81	-1056.01	410.807
≥ 14	83941.2	-44915.2	13641	-215.389	4953.19	-1121.71	552.724
≥ 15	87228.5	-48130	15056.9	-212.545	4951.12	-1112.5	260.194
≥ 16	90321.7	-50918.3	16285.5	-206.094	4923.36	-1106.35	-38.7487
≥ 17	92836.2	-53314.5	17481.7	-203.139	4924.61	-1109.32	-159.673
≥ 18	93872.8	-53721.4	17865.1	-202.573	4956.21	-1136.9	30.0594
≥ 19	96361.6	-56019.1	19075.9	-199.068	4954.59	-1156.07	-125.917
≥ 20	98647.5	-57795.1	19961.8	-191.502	4869.59	-1108.74	-217.603

Table 2.1.28 (cont'd)

PWR FUEL ASSEMBLY COOLING TIME-DEPENDENT COEFFICIENTS (ZR-CLAD FUEL)

Cooling Time (years)	Array/Class 14x14C						
	A	B	C	D	E	F	G
≥ 3	19176.9	192.012	-66.7595	-138.112	2666.73	-407.664	-1372.41
≥ 4	32040.3	-4731.4	651.014	-124.944	3012.63	-530.456	-890.059
≥ 5	43276.7	-11292.8	2009.76	-142.172	3313.91	-594.917	-200.195
≥ 6	51315.5	-16920.5	3414.76	-164.287	3610.77	-652.118	463.041
≥ 7	57594.7	-21897.6	4848.49	-189.606	3940.67	-729.367	781.46
≥ 8	63252.3	-26562.8	6273.01	-199.974	4088.41	-732.054	693.879
≥ 9	67657.5	-30350.9	7533.4	-211.77	4283.39	-772.916	588.456
≥ 10	71834.4	-34113.7	8857.32	-216.408	4383.45	-774.982	380.243
≥ 11	75464.1	-37382.1	10063	-218.813	4460.69	-776.665	160.668
≥ 12	77811.1	-39425.1	10934.3	-225.193	4604.68	-833.459	182.463
≥ 13	81438.3	-42785.4	12239.9	-220.943	4597.28	-803.32	-191.636
≥ 14	84222.1	-45291.6	13287.9	-218.366	4608.13	-791.655	-354.59
≥ 15	86700.1	-47582.6	14331.2	-218.206	4655.34	-807.366	-487.316
≥ 16	88104.7	-48601.1	14927.9	-219.498	4729.97	-849.446	-373.196
≥ 17	91103.3	-51332.5	16129	-212.138	4679.91	-822.896	-654.296
≥ 18	93850.4	-53915.8	17336.9	-207.666	4652.65	-799.697	-866.307
≥ 19	96192.9	-55955.8	18359.3	-203.462	4642.65	-800.315	-1007.75
≥ 20	97790.4	-57058.1	19027.7	-200.963	4635.88	-799.721	-951.122

Table 2.1.28 (cont'd)

PWR FUEL ASSEMBLY COOLING TIME-DEPENDENT COEFFICIENTS (ZR-CLAD FUEL)

Cooling Time (years)	Array/Class 15x15A/B/C						
	A	B	C	D	E	F	G
≥ 3	15789.2	119.829	-21.8071	-127.422	2152.53	-267.717	-580.768
≥ 4	26803.8	-3312.93	415.027	-116.279	2550.15	-386.33	-367.168
≥ 5	36403.6	-7831.93	1219.66	-126.065	2858.32	-471.785	326.863
≥ 6	44046.1	-12375.9	2213.52	-145.727	3153.45	-539.715	851.971
≥ 7	49753.5	-16172.6	3163.61	-166.946	3428.38	-603.598	1186.31
≥ 8	55095.4	-20182.5	4287.03	-183.047	3650.42	-652.92	1052.4
≥ 9	58974.4	-23071.6	5156.53	-191.718	3805.41	-687.18	1025
≥ 10	62591.8	-25800.8	5995.95	-195.105	3884.14	-690.659	868.556
≥ 11	65133.1	-27747.4	6689	-203.095	4036.91	-744.034	894.607
≥ 12	68448.4	-30456	7624.9	-202.201	4083.52	-753.391	577.914
≥ 13	71084.4	-32536.4	8381.78	-201.624	4117.93	-757.16	379.105
≥ 14	73459.5	-34352.3	9068.86	-197.988	4113.16	-747.015	266.536
≥ 15	75950.7	-36469.4	9920.52	-199.791	4184.91	-779.222	57.9429
≥ 16	76929.1	-36845.6	10171.3	-197.88	4206.24	-794.541	256.099
≥ 17	79730	-39134.8	11069.4	-190.865	4160.42	-773.448	-42.6853
≥ 18	81649.2	-40583	11736.1	-187.604	4163.36	-785.838	-113.614
≥ 19	83459	-41771.8	12265.9	-181.461	4107.51	-758.496	-193.442
≥ 20	86165.4	-44208.8	13361.2	-178.89	4107.62	-768.671	-479.778

Table 2.1.28 (cont'd)

PWR FUEL ASSEMBLY COOLING TIME-DEPENDENT COEFFICIENTS (ZR-CLAD FUEL)

Cooling Time (years)	Array/Class 15x15D/E/F/H						
	A	B	C	D	E	F	G
≥ 3	15192.5	50.5722	-12.3042	-126.906	2009.71	-235.879	-561.574
≥ 4	25782.5	-3096.5	369.096	-113.289	2357.75	-334.695	-254.964
≥ 5	35026.5	-7299.87	1091.93	-124.619	2664	-414.527	470.916
≥ 6	42234.9	-11438.4	1967.63	-145.948	2945.81	-474.981	1016.84
≥ 7	47818.4	-15047	2839.22	-167.273	3208.95	-531.296	1321.12
≥ 8	52730.7	-18387.2	3702.43	-175.057	3335.58	-543.232	1223.61
≥ 9	56254.6	-20999.9	4485.93	-190.489	3547.98	-600.64	1261.55
≥ 10	59874.6	-23706.5	5303.88	-193.807	3633.01	-611.892	1028.63
≥ 11	62811	-25848.4	5979.64	-194.997	3694.14	-618.968	862.738
≥ 12	65557.6	-27952.4	6686.74	-198.224	3767.28	-635.126	645.139
≥ 13	67379.4	-29239.2	7197.49	-200.164	3858.53	-677.958	652.601
≥ 14	69599.2	-30823.8	7768.51	-196.788	3868.2	-679.88	504.443
≥ 15	71806.7	-32425	8360.38	-191.935	3851.65	-669.917	321.146
≥ 16	73662.6	-33703.5	8870.78	-187.366	3831.59	-658.419	232.335
≥ 17	76219.8	-35898.1	9754.72	-189.111	3892.07	-694.244	-46.924
≥ 18	76594.4	-35518.2	9719.78	-185.11	3897.04	-712.82	236.047
≥ 19	78592.7	-36920.8	10316.5	-179.54	3865.84	-709.551	82.478
≥ 20	80770.5	-38599.9	11051.3	-175.106	3858.67	-723.211	-116.014

Table 2.1.28 (cont'd)

PWR FUEL ASSEMBLY COOLING TIME-DEPENDENT COEFFICIENTS (ZR-CLAD FUEL)

Cooling Time (years)	Array/Class 16x16A						
	A	B	C	D	E	F	G
≥ 3	17038.2	158.445	-37.6008	-136.707	2368.1	-321.58	-700.033
≥ 4	29166.3	-3919.95	508.439	-125.131	2782.53	-455.722	-344.199
≥ 5	40285	-9762.36	1629.72	-139.652	3111.83	-539.804	139.67
≥ 6	48335.7	-15002.6	2864.09	-164.702	3444.97	-614.756	851.706
≥ 7	55274.9	-20190	4258.03	-185.909	3728.11	-670.841	920.035
≥ 8	60646.6	-24402.4	5483.54	-199.014	3903.29	-682.26	944.913
≥ 9	64663.2	-27753.1	6588.21	-215.318	4145.34	-746.822	967.914
≥ 10	69306.9	-31739.1	7892.13	-218.898	4237.04	-746.815	589.277
≥ 11	72725.8	-34676.6	8942.26	-220.836	4312.93	-750.85	407.133
≥ 12	76573.8	-38238.7	10248.1	-224.934	4395.85	-757.914	23.7549
≥ 13	78569	-39794.3	10914.9	-224.584	4457	-776.876	69.428
≥ 14	81559.4	-42453.6	11969.6	-222.704	4485.28	-778.427	-203.031
≥ 15	84108.6	-44680.4	12897.8	-218.387	4460	-746.756	-329.078
≥ 16	86512.2	-46766.8	13822.8	-216.278	4487.79	-759.882	-479.729
≥ 17	87526.7	-47326.2	14221	-218.894	4567.68	-805.659	-273.692
≥ 18	90340.3	-49888.6	15349.8	-212.139	4506.29	-762.236	-513.316
≥ 19	93218.2	-52436.7	16482.4	-207.653	4504.12	-776.489	-837.1
≥ 20	95533.9	-54474.1	17484.2	-203.094	4476.21	-760.482	-955.662

Table 2.1.28 (cont'd)

PWR FUEL ASSEMBLY COOLING TIME-DEPENDENT COEFFICIENTS (ZR-CLAD FUEL)

Cooling Time (years)	Array/Class 17x17A						
	A	B	C	D	E	F	G
≥ 3	16784.4	3.90244	-10.476	-128.835	2256.98	-287.108	-263.081
≥ 4	28859	-3824.72	491.016	-120.108	2737.65	-432.361	-113.457
≥ 5	40315.9	-9724	1622.89	-140.459	3170.28	-547.749	425.136
≥ 6	49378.5	-15653.1	3029.25	-164.712	3532.55	-628.93	842.73
≥ 7	56759.5	-21320.4	4598.78	-190.58	3873.21	-698.143	975.46
≥ 8	63153.4	-26463.8	6102.47	-201.262	4021.84	-685.431	848.497
≥ 9	67874.9	-30519.2	7442.84	-218.184	4287.23	-754.597	723.305
≥ 10	72676.8	-34855.2	8928.27	-222.423	4382.07	-741.243	387.877
≥ 11	75623	-37457.1	9927.65	-232.962	4564.55	-792.051	388.402
≥ 12	80141.8	-41736.5	11509.8	-232.944	4624.72	-787.134	-164.727
≥ 13	83587.5	-45016.4	12800.9	-230.643	4623.2	-745.177	-428.635
≥ 14	86311.3	-47443.4	13815.2	-228.162	4638.89	-729.425	-561.758
≥ 15	87839.2	-48704.1	14500.3	-231.979	4747.67	-775.801	-441.959
≥ 16	91190.5	-51877.4	15813.2	-225.768	4692.45	-719.311	-756.537
≥ 17	94512	-55201.2	17306.1	-224.328	4740.86	-747.11	-1129.15
≥ 18	96959	-57459.9	18403.8	-220.038	4721.02	-726.928	-1272.47
≥ 19	99061.1	-59172.1	19253.1	-214.045	4663.37	-679.362	-1309.88
≥ 20	100305	-59997.5	19841.1	-216.112	4721.71	-705.463	-1148.45

Table 2.1.28 (cont'd)

PWR FUEL ASSEMBLY COOLING TIME-DEPENDENT COEFFICIENTS (ZR-CLAD FUEL)

Cooling Time (years)	Array/Class 17x17B/C						
	A	B	C	D	E	F	G
≥ 3	15526.8	18.0364	-9.36581	-128.415	2050.81	-243.915	-426.07
≥ 4	26595.4	-3345.47	409.264	-115.394	2429.48	-350.883	-243.477
≥ 5	36190.4	-7783.2	1186.37	-130.008	2769.53	-438.716	519.95
≥ 6	44159	-12517.5	2209.54	-150.234	3042.25	-489.858	924.151
≥ 7	50399.6	-16780.6	3277.26	-173.223	3336.58	-555.743	1129.66
≥ 8	55453.9	-20420	4259.68	-189.355	3531.65	-581.917	1105.62
≥ 9	59469.3	-23459.8	5176.62	-199.63	3709.99	-626.667	1028.74
≥ 10	63200.5	-26319.6	6047.8	-203.233	3783.02	-619.949	805.311
≥ 11	65636.3	-28258.3	6757.23	-214.247	3972.8	-688.56	843.457
≥ 12	68989.7	-30904.4	7626.53	-212.539	3995.62	-678.037	495.032
≥ 13	71616.6	-32962.2	8360.45	-210.386	4009.11	-666.542	317.009
≥ 14	73923.9	-34748	9037.75	-207.668	4020.13	-662.692	183.086
≥ 15	76131.8	-36422.3	9692.32	-203.428	4014.55	-655.981	47.5234
≥ 16	77376.5	-37224.7	10111.4	-207.581	4110.76	-703.37	161.128
≥ 17	80294.9	-39675.9	11065.9	-201.194	4079.24	-691.636	-173.782
≥ 18	82219.8	-41064.8	11672.1	-195.431	4043.83	-675.432	-286.059
≥ 19	84168.9	-42503.6	12309.4	-190.602	4008.19	-656.192	-372.411
≥ 20	86074.2	-43854.4	12935.9	-185.767	3985.57	-656.72	-475.953

Table 2.1.29

BWR FUEL ASSEMBLY COOLING TIME-DEPENDENT COEFFICIENTS (ZR-CLAD FUEL)

Cooling Time (years)	Array/Class 7x7B						
	A	B	C	D	E	F	G
≥ 3	26409.1	28347.5	-16858	-147.076	5636.32	-1606.75	1177.88
≥ 4	61967.8	-6618.31	-4131.96	-113.949	6122.77	-2042.85	-96.7439
≥ 5	91601.1	-49298.3	17826.5	-132.045	6823.14	-2418.49	-185.189
≥ 6	111369	-80890.1	35713.8	-150.262	7288.51	-2471.1	86.6363
≥ 7	126904	-108669	53338.1	-167.764	7650.57	-2340.78	150.403
≥ 8	139181	-132294	69852.5	-187.317	8098.66	-2336.13	97.5285
≥ 9	150334	-154490	86148.1	-193.899	8232.84	-2040.37	-123.029
≥ 10	159897	-173614	100819	-194.156	8254.99	-1708.32	-373.605
≥ 11	166931	-186860	111502	-193.776	8251.55	-1393.91	-543.677
≥ 12	173691	-201687	125166	-202.578	8626.84	-1642.3	-650.814
≥ 13	180312	-215406	137518	-201.041	8642.19	-1469.45	-810.024
≥ 14	185927	-227005	148721	-197.938	8607.6	-1225.95	-892.876
≥ 15	191151	-236120	156781	-191.625	8451.86	-846.27	-1019.4
≥ 16	195761	-244598	165372	-187.043	8359.19	-572.561	-1068.19
≥ 17	200791	-256573	179816	-197.26	8914.28	-1393.37	-1218.63
≥ 18	206068	-266136	188841	-187.191	8569.56	-730.898	-1363.79
≥ 19	210187	-273609	197794	-182.151	8488.23	-584.727	-1335.59
≥ 20	213731	-278120	203074	-175.864	8395.63	-457.304	-1364.38

Table 2.1.29 (cont'd)

BWR FUEL ASSEMBLY COOLING TIME-DEPENDENT COEFFICIENTS (ZR-CLAD FUEL)

Cooling Time (years)	Array/Class 8x8B						
	A	B	C	D	E	F	G
≥ 3	28219.6	28963.7	-17616.2	-147.68	5887.41	-1730.96	1048.21
≥ 4	66061.8	-10742.4	-1961.82	-123.066	6565.54	-2356.05	-298.005
≥ 5	95790.7	-53401.7	19836.7	-134.584	7145.41	-2637.09	-298.858
≥ 6	117477	-90055.9	41383.9	-154.758	7613.43	-2612.69	-64.9921
≥ 7	134090	-120643	60983	-168.675	7809	-2183.3	-40.8885
≥ 8	148186	-149181	81418.7	-185.726	8190.07	-2040.31	-260.773
≥ 9	159082	-172081	99175.2	-197.185	8450.86	-1792.04	-381.705
≥ 10	168816	-191389	113810	-195.613	8359.87	-1244.22	-613.594
≥ 11	177221	-210599	131099	-208.3	8810	-1466.49	-819.773
≥ 12	183929	-224384	143405	-207.497	8841.33	-1227.71	-929.708
≥ 13	191093	-240384	158327	-204.95	8760.17	-811.708	-1154.76
≥ 14	196787	-252211	169664	-204.574	8810.95	-610.928	-1208.97
≥ 15	203345	-267656	186057	-208.962	9078.41	-828.954	-1383.76
≥ 16	207973	-276838	196071	-204.592	9024.17	-640.808	-1436.43
≥ 17	213891	-290411	211145	-202.169	9024.19	-482.1	-1595.28
≥ 18	217483	-294066	214600	-194.243	8859.35	-244.684	-1529.61
≥ 19	220504	-297897	219704	-190.161	8794.97	-10.9863	-1433.86
≥ 20	227821	-318395	245322	-194.682	9060.96	-350.308	-1741.16

Table 2.1.29 (cont'd)

BWR FUEL ASSEMBLY COOLING TIME-DEPENDENT COEFFICIENTS (ZR-CLAD FUEL)

Cooling Time (years)	Array/Class 8x8C/D/E						
	A	B	C	D	E	F	G
≥ 3	28592.7	28691.5	-17773.6	-149.418	5969.45	-1746.07	1063.62
≥ 4	66720.8	-12115.7	-1154	-128.444	6787.16	-2529.99	-302.155
≥ 5	96929.1	-55827.5	21140.3	-136.228	7259.19	-2685.06	-334.328
≥ 6	118190	-92000.2	42602.5	-162.204	7907.46	-2853.42	-47.5465
≥ 7	135120	-123437	62827.1	-172.397	8059.72	-2385.81	-75.0053
≥ 8	149162	-152986	84543.1	-195.458	8559.11	-2306.54	-183.595
≥ 9	161041	-177511	103020	-200.087	8632.84	-1864.4	-433.081
≥ 10	171754	-201468	122929	-209.799	8952.06	-1802.86	-755.742
≥ 11	179364	-217723	137000	-215.803	9142.37	-1664.82	-847.268
≥ 12	186090	-232150	150255	-216.033	9218.36	-1441.92	-975.817
≥ 13	193571	-249160	165997	-213.204	9146.99	-1011.13	-1119.47
≥ 14	200034	-263671	180359	-210.559	9107.54	-694.626	-1312.55
≥ 15	205581	-275904	193585	-216.242	9446.57	-1040.65	-1428.13
≥ 16	212015	-290101	207594	-210.036	9212.93	-428.321	-1590.7
≥ 17	216775	-299399	218278	-204.611	9187.86	-398.353	-1657.6
≥ 18	220653	-306719	227133	-202.498	9186.34	-181.672	-1611.86
≥ 19	224859	-314004	235956	-193.902	8990.14	145.151	-1604.71
≥ 20	228541	-320787	245449	-200.727	9310.87	-230.252	-1570.18

Table 2.1.29 (cont'd)

BWR FUEL ASSEMBLY COOLING TIME-DEPENDENT COEFFICIENTS (ZR-CLAD FUEL)

Cooling Time (years)	Array/Class 9x9A						
	A	B	C	D	E	F	G
≥ 3	30538.7	28463.2	-18105.5	-150.039	6226.92	-1876.69	1034.06
≥ 4	71040.1	-16692.2	1164.15	-128.241	7105.27	-2728.58	-414.09
≥ 5	100888	-60277.7	24150.1	-142.541	7896.11	-3272.86	-232.197
≥ 6	124846	-102954	50350.8	-161.849	8350.16	-3163.44	-91.1396
≥ 7	143516	-140615	76456.5	-185.538	8833.04	-2949.38	-104.802
≥ 8	158218	-171718	99788.2	-196.315	9048.88	-2529.26	-259.929
≥ 9	172226	-204312	126620	-214.214	9511.56	-2459.19	-624.954
≥ 10	182700	-227938	146736	-215.793	9555.41	-1959.92	-830.943
≥ 11	190734	-246174	163557	-218.071	9649.43	-1647.5	-935.021
≥ 12	199997	-269577	186406	-223.975	9884.92	-1534.34	-1235.27
≥ 13	207414	-287446	204723	-228.808	10131.7	-1614.49	-1358.61
≥ 14	215263	-306131	223440	-220.919	9928.27	-988.276	-1638.05
≥ 15	221920	-321612	239503	-217.949	9839.02	-554.709	-1784.04
≥ 16	226532	-331778	252234	-216.189	9893.43	-442.149	-1754.72
≥ 17	232959	-348593	272609	-219.907	10126.3	-663.84	-1915.3
≥ 18	240810	-369085	296809	-219.729	10294.6	-859.302	-2218.87
≥ 19	244637	-375057	304456	-210.997	10077.8	-425.446	-2127.83
≥ 20	248112	-379262	309391	-204.191	9863.67	100.27	-2059.39

Table 2.1.29 (cont'd)

BWR FUEL ASSEMBLY COOLING TIME-DEPENDENT COEFFICIENTS (ZR-CLAD FUEL)

Cooling Time (years)	Array/Class 9x9B						
	A	B	C	D	E	F	G
≥ 3	30613.2	28985.3	-18371	-151.117	6321.55	-1881.28	988.92
≥ 4	71346.6	-15922.9	631.132	-128.876	7232.47	-2810.64	-471.737
≥ 5	102131	-60654.1	23762.7	-140.748	7881.6	-3156.38	-417.979
≥ 6	127187	-105842	51525.2	-162.228	8307.4	-2913.08	-342.13
≥ 7	146853	-145834	79146.5	-185.192	8718.74	-2529.57	-484.885
≥ 8	162013	-178244	103205	-197.825	8896.39	-1921.58	-584.013
≥ 9	176764	-212856	131577	-215.41	9328.18	-1737.12	-1041.11
≥ 10	186900	-235819	151238	-218.98	9388.08	-1179.87	-1202.83
≥ 11	196178	-257688	171031	-220.323	9408.47	-638.53	-1385.16
≥ 12	205366	-280266	192775	-223.715	9592.12	-472.261	-1661.6
≥ 13	215012	-306103	218866	-231.821	9853.37	-361.449	-1985.56
≥ 14	222368	-324558	238655	-228.062	9834.57	3.47358	-2178.84
≥ 15	226705	-332738	247316	-224.659	9696.59	632.172	-2090.75
≥ 16	233846	-349835	265676	-221.533	9649.93	913.747	-2243.34
≥ 17	243979	-379622	300077	-222.351	9792.17	1011.04	-2753.36
≥ 18	247774	-386203	308873	-220.306	9791.37	1164.58	-2612.25
≥ 19	254041	-401906	327901	-213.96	9645.47	1664.94	-2786.2
≥ 20	256003	-402034	330566	-215.242	9850.42	1359.46	-2550.06

Table 2.1.29 (cont'd)

BWR FUEL ASSEMBLY COOLING TIME-DEPENDENT COEFFICIENTS (ZR-CLAD FUEL)

Cooling Time (years)	Array/Class 9x9C/D						
	A	B	C	D	E	F	G
≥ 3	30051.6	29548.7	-18614.2	-148.276	6148.44	-1810.34	1006
≥ 4	70472.7	-14696.6	-233.567	-127.728	7008.69	-2634.22	-444.373
≥ 5	101298	-59638.9	23065.2	-138.523	7627.57	-2958.03	-377.965
≥ 6	125546	-102740	49217.4	-160.811	8096.34	-2798.88	-259.767
≥ 7	143887	-139261	74100.4	-184.302	8550.86	-2517.19	-275.151
≥ 8	159633	-172741	98641.4	-194.351	8636.89	-1838.81	-486.731
≥ 9	173517	-204709	124803	-212.604	9151.98	-1853.27	-887.137
≥ 10	182895	-225481	142362	-218.251	9262.59	-1408.25	-978.356
≥ 11	192530	-247839	162173	-217.381	9213.58	-818.676	-1222.12
≥ 12	201127	-268201	181030	-215.552	9147.44	-232.221	-1481.55
≥ 13	209538	-289761	203291	-225.092	9588.12	-574.227	-1749.35
≥ 14	216798	-306958	220468	-222.578	9518.22	-69.9307	-1919.71
≥ 15	223515	-323254	237933	-217.398	9366.52	475.506	-2012.93
≥ 16	228796	-334529	250541	-215.004	9369.33	662.325	-2122.75
≥ 17	237256	-356311	273419	-206.483	9029.55	1551.3	-2367.96
≥ 18	242778	-369493	290354	-215.557	9600.71	659.297	-2589.32
≥ 19	246704	-377971	302630	-210.768	9509.41	1025.34	-2476.06
≥ 20	249944	-382059	308281	-205.495	9362.63	1389.71	-2350.49

Table 2.1.29 (cont'd)

BWR FUEL ASSEMBLY COOLING TIME-DEPENDENT COEFFICIENTS (ZR-CLAD FUEL)

Cooling Time (years)	Array/Class 9x9E/F						
	A	B	C	D	E	F	G
≥ 3	30284.3	26949.5	-16926.4	-147.914	6017.02	-1854.81	1026.15
≥ 4	69727.4	-17117.2	1982.33	-127.983	6874.68	-2673.01	-359.962
≥ 5	98438.9	-58492	23382.2	-138.712	7513.55	-3038.23	-112.641
≥ 6	119765	-95024.1	45261	-159.669	8074.25	-3129.49	221.182
≥ 7	136740	-128219	67940.1	-182.439	8595.68	-3098.17	315.544
≥ 8	150745	-156607	88691.5	-193.941	8908.73	-2947.64	142.072
≥ 9	162915	-182667	109134	-198.37	8999.11	-2531	-93.4908
≥ 10	174000	-208668	131543	-210.777	9365.52	-2511.74	-445.876
≥ 11	181524	-224252	145280	-212.407	9489.67	-2387.49	-544.123
≥ 12	188946	-240952	160787	-210.65	9478.1	-2029.94	-652.339
≥ 13	193762	-250900	171363	-215.798	9742.31	-2179.24	-608.636
≥ 14	203288	-275191	196115	-218.113	9992.5	-2437.71	-1065.92
≥ 15	208108	-284395	205221	-213.956	9857.25	-1970.65	-1082.94
≥ 16	215093	-301828	224757	-209.736	9789.58	-1718.37	-1303.35
≥ 17	220056	-310906	234180	-201.494	9541.73	-1230.42	-1284.15
≥ 18	224545	-320969	247724	-206.807	9892.97	-1790.61	-1381.9
≥ 19	226901	-322168	250395	-204.073	9902.14	-1748.78	-1253.22
≥ 20	235561	-345414	276856	-198.306	9720.78	-1284.14	-1569.18

Table 2.1.29 (cont'd)

BWR FUEL ASSEMBLY COOLING TIME-DEPENDENT COEFFICIENTS (ZR-CLAD FUEL)

Cooling Time (years)	Array/Class 9x9G						
	A	B	C	D	E	F	G
≥ 3	35158.5	26918.5	-17976.7	-149.915	6787.19	-2154.29	836.894
≥ 4	77137.2	-19760.1	2371.28	-130.934	8015.43	-3512.38	-455.424
≥ 5	113405	-77931.2	35511.2	-150.637	8932.55	-4099.48	-629.806
≥ 6	139938	-128700	68698.3	-173.799	9451.22	-3847.83	-455.905
≥ 7	164267	-183309	109526	-193.952	9737.91	-3046.84	-737.992
≥ 8	182646	-227630	146275	-210.936	10092.3	-2489.3	-1066.96
≥ 9	199309	-270496	184230	-218.617	10124.3	-1453.81	-1381.41
≥ 10	213186	-308612	221699	-235.828	10703.2	-1483.31	-1821.73
≥ 11	225587	-342892	256242	-236.112	10658.5	-612.076	-2134.65
≥ 12	235725	-370471	285195	-234.378	10604.9	118.591	-2417.89
≥ 13	247043	-404028	323049	-245.79	11158.2	-281.813	-2869.82
≥ 14	253649	-421134	342682	-243.142	11082.3	400.019	-2903.88
≥ 15	262750	-448593	376340	-245.435	11241.2	581.355	-3125.07
≥ 16	270816	-470846	402249	-236.294	10845.4	1791.46	-3293.07
≥ 17	279840	-500272	441964	-241.324	11222.6	1455.84	-3528.25
≥ 18	284533	-511287	458538	-240.905	11367.2	1459.68	-3520.94
≥ 19	295787	-545885	501824	-235.685	11188.2	2082.21	-3954.2
≥ 20	300209	-556936	519174	-229.539	10956	2942.09	-3872.87

Table 2.1.29 (cont'd)

BWR FUEL ASSEMBLY COOLING TIME-DEPENDENT COEFFICIENTS (ZR-CLAD FUEL)

Cooling Time (years)	Array/Class 10x10A/B						
	A	B	C	D	E	F	G
≥ 3	29285.4	27562.2	-16985	-148.415	5960.56	-1810.79	1001.45
≥ 4	67844.9	-14383	395.619	-127.723	6754.56	-2547.96	-369.267
≥ 5	96660.5	-55383.8	21180.4	-137.17	7296.6	-2793.58	-192.85
≥ 6	118098	-91995	42958	-162.985	7931.44	-2940.84	60.9197
≥ 7	135115	-123721	63588.9	-171.747	8060.23	-2485.59	73.6219
≥ 8	148721	-151690	84143.9	-190.26	8515.81	-2444.25	-63.4649
≥ 9	160770	-177397	104069	-197.534	8673.6	-2101.25	-331.046
≥ 10	170331	-198419	121817	-213.692	9178.33	-2351.54	-472.844
≥ 11	179130	-217799	138652	-209.75	9095.43	-1842.88	-705.254
≥ 12	186070	-232389	151792	-208.946	9104.52	-1565.11	-822.73
≥ 13	192407	-246005	164928	-209.696	9234.7	-1541.54	-979.245
≥ 14	200493	-265596	183851	-207.639	9159.83	-1095.72	-1240.61
≥ 15	205594	-276161	195760	-213.491	9564.23	-1672.22	-1333.64
≥ 16	209386	-282942	204110	-209.322	9515.83	-1506.86	-1286.82
≥ 17	214972	-295149	217095	-202.445	9292.34	-893.6	-1364.97
≥ 18	219312	-302748	225826	-198.667	9272.27	-878.536	-1379.58
≥ 19	223481	-310663	235908	-194.825	9252.9	-785.066	-1379.62
≥ 20	227628	-319115	247597	-199.194	9509.02	-1135.23	-1386.19

Table 2.1.29 (cont'd)

BWR FUEL ASSEMBLY COOLING TIME-DEPENDENT COEFFICIENTS (ZR-CLAD FUEL)

Cooling Time (years)	Array/Class 10x10C						
	A	B	C	D	E	F	G
≥ 3	31425.3	27358.9	-17413.3	-152.096	6367.53	-1967.91	925.763
≥ 4	71804	-16964.1	1000.4	-129.299	7227.18	-2806.44	-416.92
≥ 5	102685	-62383.3	24971.2	-142.316	7961	-3290.98	-354.784
≥ 6	126962	-105802	51444.6	-164.283	8421.44	-3104.21	-186.615
≥ 7	146284	-145608	79275.5	-188.967	8927.23	-2859.08	-251.163
≥ 8	162748	-181259	105859	-199.122	9052.91	-2206.31	-554.124
≥ 9	176612	-214183	133261	-217.56	9492.17	-1999.28	-860.669
≥ 10	187756	-239944	155315	-219.56	9532.45	-1470.9	-1113.42
≥ 11	196580	-260941	174536	-222.457	9591.64	-944.473	-1225.79
≥ 12	208017	-291492	204805	-233.488	10058.3	-1217.01	-1749.84
≥ 13	214920	-307772	221158	-234.747	10137.1	-897.23	-1868.04
≥ 14	222562	-326471	240234	-228.569	9929.34	-183.47	-2016.12
≥ 15	228844	-342382	258347	-226.944	9936.76	117.061	-2106.05
≥ 16	233907	-353008	270390	-223.179	9910.72	360.39	-2105.23
≥ 17	244153	-383017	304819	-227.266	10103.2	380.393	-2633.23
≥ 18	249240	-395456	321452	-226.989	10284.1	169.947	-2623.67
≥ 19	254343	-406555	335240	-220.569	10070.5	764.689	-2640.2
≥ 20	260202	-421069	354249	-216.255	10069.9	854.497	-2732.77

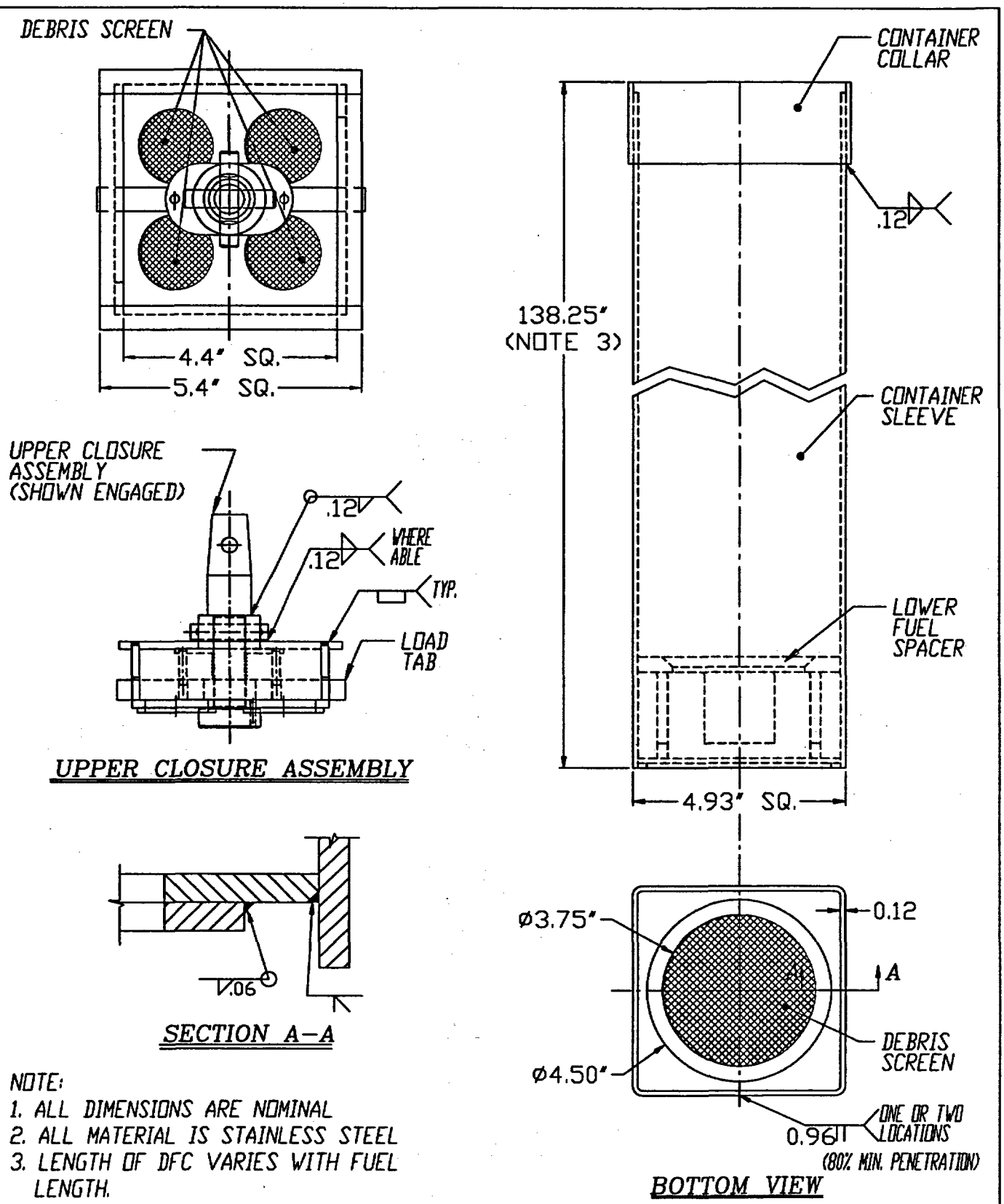

NOTE:
1. ALL DIMENSIONS ARE NOMINAL
2. ALL MATERIAL IS STAINLESS STEEL
3. LENGTH OF DFC VARIES WITH FUEL LENGTH.

FIGURE 2.1.1; DAMAGED FUEL CONTAINER FOR DRESDEN UNIT-1/ HUMBOLDT BAY SNF

NOTES:
1. ALL DIMENSIONS ARE IN INCHES AND ARE APPROXIMATE.
2. ALL MATERIAL IS STAINLESS STEEL.

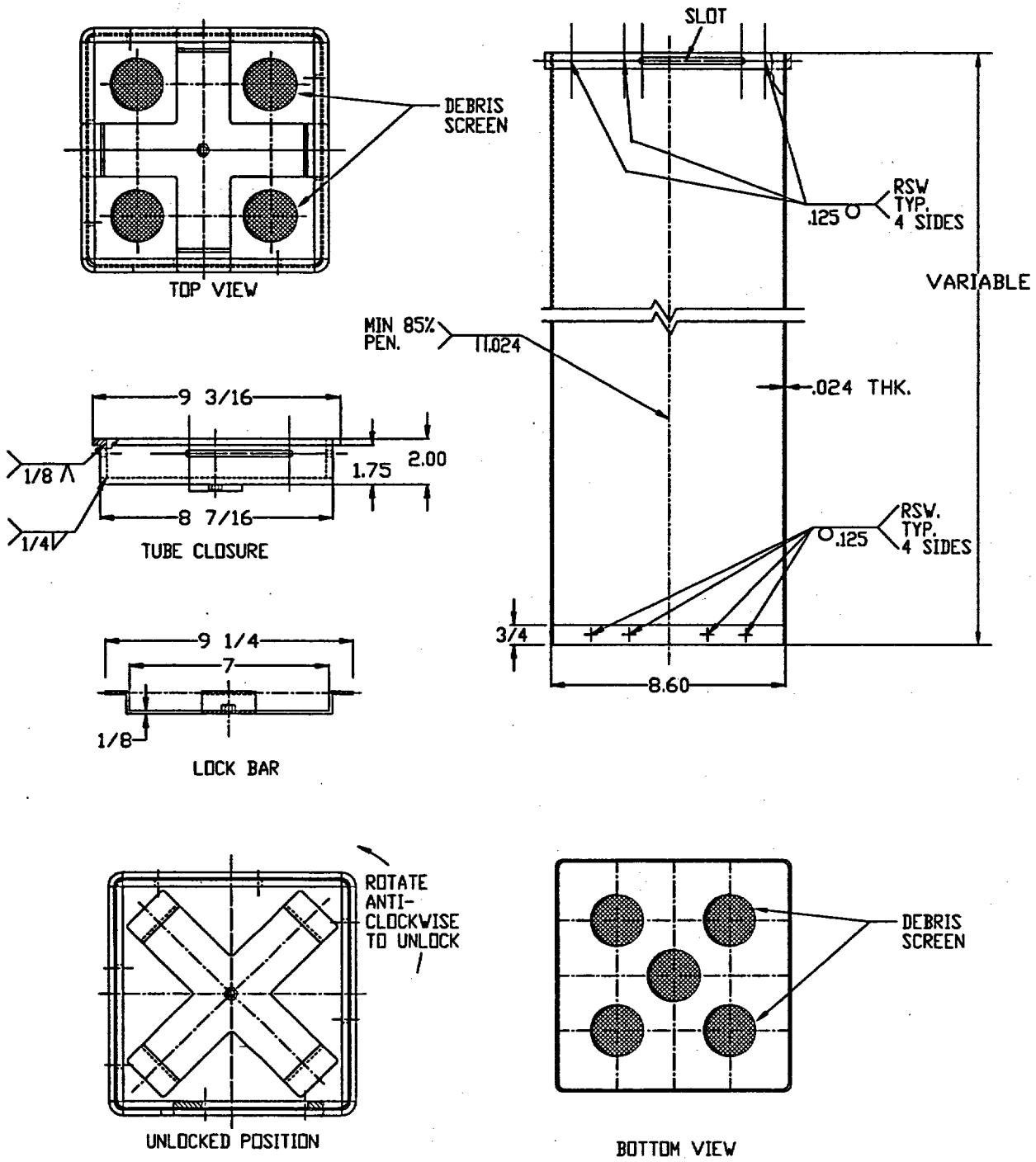

FIGURE 2.1.2D; HOLTEC DAMAGED FUEL CONTAINER FOR PWR SNF IN MPC-32/32F

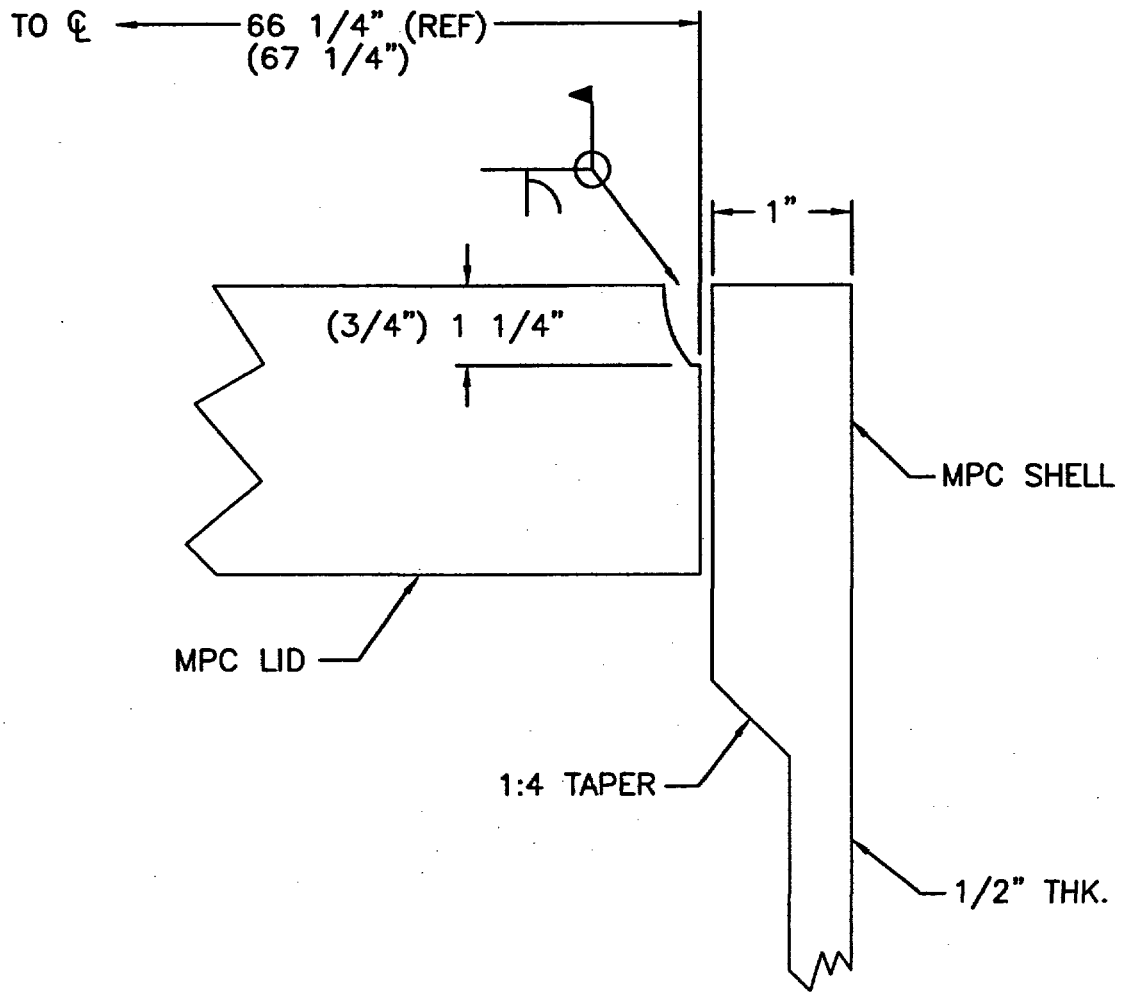

NOTES: 1. Standard MPC dimensions in parentheses.
2. Standard MPC shell thickness is 1/2" along its entire length.
3. Figure is not to scale.

Figure 2.1.9; Fuel Debris MPC ("F" Model)

2.2 HI-STORM 100 DESIGN CRITERIA

The HI-STORM 100 System is engineered for unprotected outside storage for the duration of its design life. Accordingly, the cask system is designed to withstand normal, off-normal, and environmental phenomena and accident conditions of storage. Normal conditions include the conditions that are expected to occur regularly or frequently in the course of normal operation. Off-normal conditions include those infrequent events that could reasonably be expected to occur during the lifetime of the cask system. Environmental phenomena and accident conditions include events that are postulated because their consideration establishes a conservative design basis.

Normal condition loads act in combination with all other loads (off-normal or environmental phenomena/accident). Off-normal condition loads and environmental phenomena and accident condition loads are not applied in combination. However, loads that occur as a result of the same phenomena are applied simultaneously. For example, the tornado winds loads are applied in combination with the tornado missile loads.

In the following subsections, the design criteria are established for normal, off-normal, and accident conditions for storage. Loads that require consideration under each condition are identified and the design criteria discussed. Based on consideration of the applicable requirements of the system, the following loads are identified:

Normal *(Long-Term Storage)* Condition: Dead Weight, Handling, Pressure, Temperature, Snow

Off-Normal Condition: Pressure, Temperature, Leakage of One Seal, Partial Blockage of Air Inlets, Off-Normal Handling of HI-TRAC

Accident Condition: Handling Accident, Tip-Over, Fire, Partial Blockage of MPC Basket Vent Holes, Tornado, Flood, Earthquake, Fuel Rod Rupture, Confinement Boundary Leakage, Explosion, Lightning, Burial Under Debris, 100% Blockage of Air Inlets, Extreme Environmental Temperature

Short-Term Operations: This loading condition is defined to accord with ISG-11, Revision 2 guidance [2.0.8]. This includes those normal operational evolutions necessary to support fuel loading or unloading activities. These include, but are not limited to MPC cavity drying, helium backfill, MPC transfer, and on-site handling of a loaded HI-TRAC transfer cask.

Each of these conditions and the applicable loads are identified with applicable design criteria established. Design criteria are deemed to be satisfied if the specified allowable limits are not exceeded.

2.2.1 Normal Condition Design Criteria

2.2.1.1 Dead Weight

The HI-STORM 100 System must withstand the static loads due to the weights of each of its components, including the weight of the HI-TRAC with the loaded MPC atop the storage overpack.

2.2.1.2 Handling

The HI-STORM 100 System must withstand loads experienced during routine handling. Normal handling includes:

i. vertical lifting and transfer to the ISFSI of the HI-STORM overpack with loaded MPC
ii. lifting, upending/downending, and transfer to the ISFSI of the HI-TRAC with loaded MPC in the vertical or horizontal position
iii. lifting of the loaded MPC into and out of the HI-TRAC, HI-STORM, or HI-STAR overpack

The loads shall be increased by 15% to include any dynamic effects from the lifting operations as directed by CMAA #70 [2.2.16].

Handling operations of the loaded HI-TRAC transfer cask or HI-STORM overpack are limited to working area ambient temperatures greater than or equal to 0°F. This limitation is specified to ensure that a sufficient safety margin exists before brittle fracture might occur during handling operations. Subsection 3.1.2.3 provides the demonstration of the adequacy of the HI-TRAC transfer cask and the HI-STORM overpack for use during handling operations at a minimum service temperature of 0° F.

Lifting attachments and devices shall meet the requirements of ANSI N14.6[†] [2.2.3].

2.2.1.3 Pressure

The MPC internal pressure is dependent on the initial volume of cover gas (helium), the volume of fill gas in the fuel rods, the fraction of fission gas released from the fuel matrix, the number of fuel rods assumed to have ruptured, and temperature.

The normal condition MPC internal design pressure bounds the cumulative effects of the maximum fill gas volume, normal environmental ambient temperatures, the maximum MPC heat load, and an assumed 1% of the fuel rods ruptured with 100% of the fill gas and 30% of the significant radioactive gases (e.g., H^3, Kr, and Xe) released in accordance with NUREG-1536.

[†] Yield and ultimate strength values used in the stress compliance demonstration per ANSI N14.6 shall utilize confirmed material test data through either independent coupon testing or material suppliers= CMTR or COC, as appropriate. To ensure consistency between the design and fabrication of a lifting component, compliance with ANSI N14.6 in this FSAR implies that the guidelines of ASME Section III, Subsection NF for Class 3 structures are followed for material procurement and testing, fabrication, and for NDE during manufacturing.

Table 2.2.1 provides the design pressures for the HI-STORM 100 System.

For the storage of damaged fuel assemblies or fuel debris in a damaged fuel container, it is conservatively assumed that 100% of the fuel rods are ruptured with 100% of the rod fill gas and 30% of the significant radioactive gases (e.g., H^3, Kr, and Xe) released for both normal and off-normal conditions. For PWR assemblies stored with non-fuel hardware, it is assumed that 100% of the gasses in the non-fuel hardware (e.g., BPRAs) is also released. This condition is bounded by the pressure calculation for design basis intact fuel with 100% of the fuel rods ruptured in all of the fuel assemblies. It is shown in Chapter 4 that the accident condition design pressure is not exceeded with 100% of the fuel rods ruptured in all of the design basis fuel assemblies. Therefore, rupture of 100% of the fuel rods in the damaged fuel assemblies or fuel debris will not cause the MPC internal pressure to exceed the accident design pressure.

The MPC internal design pressure under accident conditions is discussed in Subsection 2.2.3.

The HI-STORM overpack and MPC external pressure is a function of environmental conditions which may produce a pressure loading. The normal and off-normal condition external design pressure is set at ambient standard pressure (1 atmosphere).

The HI-STORM overpack is not capable of retaining internal pressure due to its open design, and, therefore, no analysis is required or provided for the overpack internal pressure.

The HI-TRAC is not capable of retaining internal pressure due to its open design and, therefore, ambient and hydrostatic pressures are the only pressures experienced. Due to the thick steel walls of the HI-TRAC transfer cask, it is evident that the small hydrostatic pressure can be easily withstood; no analysis is required or provided for the HI-TRAC internal pressure. However, the HI-TRAC water jacket does experience internal pressure due to the heat-up of the water contained in the water jacket. Analysis is presented in Chapter 3 that demonstrates that the design pressure in Table 2.2.1 can be withstood by the water jacket and Chapter 4 demonstrates by analysis that the water jacket design pressure will not be exceeded. To provide an additional layer of safety, a pressure relief device set at the design pressure is provided, which ensures the pressure will not be exceeded.

2.2.1.4 Environmental Temperatures

To evaluate the long-term effects of ambient temperatures on the HI-STORM 100 System, an upper bound value on the annual average ambient temperatures for the continental United States is used. The normal temperature specified in Table 2.2.2 is bounding for all reactor sites in the contiguous United States. The "normal" temperature set forth in Table 2.2.2 is intended to ensure that it is greater than the annual average of ambient temperatures at any location in the continental United States. In the northern region of the U.S., the design basis "normal" temperature used in this FSAR will be exceeded only for brief periods, whereas in the southern U.S, it may be straddled daily in summer months. Inasmuch as the sole effect of the "normal" temperature is on the computed fuel cladding temperature to establish long-term fuel integrity, it should not lie below the time averaged yearly mean for the ISFSI site. Previously licensed cask systems have employed lower "normal" temperatures (viz. 75° F in Docket 72-1007) by utilizing national meteorological data.

Likewise, within the thermal analysis, a conservatively assumed soil temperature of the value specified in Table 2.2.2 is utilized to bound the annual average soil temperatures for the continental United States. The 1987 ASHRAE Handbook (HVAC Systems and Applications) reports average earth temperatures, from 0 to 10 feet below grade, throughout the continental United States. The highest reported annual average value for the continental United States is 77° F for Key West, Florida. Therefore, this value is specified in Table 2.2.2 as the bounding soil temperature.

Confirmation of the site-specific annual average ambient temperature and soil temperature is to be performed by the licensee, in accordance with 10CFR72.212. The annual average temperature is combined with insolation in accordance with 10CFR71.71 averaged over 24 hours to establish the normal condition temperatures in the HI-STORM 100 System.

2.2.1.5 Design Temperatures

The ASME Boiler and Pressure Vessel Code (ASME Code) requires that the value of the vessel design temperature be established with appropriate consideration for the effect of heat generation internal or external to the vessel. The decay heat load from the spent nuclear fuel is the internal heat generation source for the HI-STORM 100 System. The ASME Code (Section III, Paragraph NCA-2142) requires the design temperature to be set at or above the maximum through thickness mean metal temperature of the pressure part under normal service (Level A) condition. Consistent with the terminology of NUREG-1536, we refer to this temperature as the "Design Temperature for Normal Conditions". Conservative calculations of the steady-state temperature field in the HI-STORM 100 System, under assumed environmental normal temperatures with the maximum decay heat load, result in HI-STORM component temperatures at or below the normal condition design temperatures for the HI-STORM 100 System defined in Table 2.2.3.

Maintaining fuel rod cladding integrity is also a design consideration. The ~~maximum~~ fuel rod *peak* cladding temperature *(PCT)* limits for *the long-term storage and short-term normal operating conditions meet the intent of the guidance in ISG-11, Revision 2 [2.0.8]. For moderate burnup fuel, the previously licensed PCT limit of 570°C (1058°F) may be used up to certain threshold heat loads during MPC drying operations, provided the fuel cladding hoop stress is shown by analysis to be acceptable (see Section 4.5).* ~~calculated by the DCCG (Diffusion Controlled Cavity Growth) methodology outlined in the LLNL report [2.2.14] in accordance with NUREG-1536. However, for conservatism, the PNL methodology outlined in PNL report [2.0.3] produces a lower fuel cladding temperature, which is used to establish the permissible fuel cladding temperature limits, which are used to determine the allowable fuel decay heat load. Maximum fuel rod stainless steel cladding temperature limits recommended in EPRI report [2.2.13] are greater than the long-term allowable Zircaloy fuel cladding temperature limits. However, in this FSAR the long-term Zircaloy fuel cladding temperature limits are conservatively applied to the stainless steel clad fuel. The short term temperature limits for Zircaloy and stainless steel cladding are taken from references [2.2.15] and [2.2.13], respectively. A detailed description of the maximum fuel rod cladding temperature limits determination is provided in Section 4.3.~~

2.2.1.6 Snow and Ice

The HI-STORM 100 System must be capable of withstanding pressure loads due to snow and ice. ASCE 7-88 (formerly ANSI A58.1) [2.2.2] provides empirical formulas and tables to compute the effective design pressure on the overpack due to the accumulation of snow for the contiguous U.S. and Alaska. Typical calculated values for heated structures such as the HI-STORM 100 System range from 50 to 70 pounds per square foot. For conservatism, the snow pressure loading is set at a level in Table 2.2.8 which bounds the ASCE 7-88 recommendation.

2.2.2 Off-Normal Conditions Design Criteria

As the HI-STORM 100 System is passive, loss of power and instrumentation failures are not defined as off-normal conditions. The off-normal condition design criteria are defined in the following subsections.

A discussion of the effects of each off-normal condition is provided in Section 11.1. Section 11.1 also provides the corrective action for each off-normal condition. The location of the detailed analysis for each event is referenced in Section 11.1.

2.2.2.1 Pressure

The HI-STORM 100 System must withstand loads due to off-normal pressure. The off-normal condition MPC internal design pressure bounds the cumulative effects of the maximum fill gas volume, off-normal environmental ambient temperatures, the maximum MPC heat load, and an assumed 10% of the fuel rods ruptured with 100% of the fill gas and 30% of the significant radioactive gases (e.g., H^3, Kr, and Xe) released in accordance with NUREG-1536. ~~For conservatism, the MPC normal internal design pressure bounds both normal and off-normal conditions. Therefore, the normal and off-normal condition MPC internal pressures are set equal for analysis purposes.~~

2.2.2.2 Environmental Temperatures

The HI-STORM 100 System must withstand off-normal environmental temperatures. The off-normal environmental temperatures are specified in Table 2.2.2. The lower bound temperature occurs with no solar loads and the upper bound temperature occurs with steady- state insolation. Each bounding temperature is assumed to persist for a duration sufficient to allow the system to reach steady-state temperatures.

Limits on the peaks in the time-varying ambient temperature at an ISFSI site is recognized in the FSAR in the specification of the off-normal temperatures. The lower bound off-normal temperature is defined as the minimum of the 72-hour average of the ambient temperature at an ISFSI site. Likewise, the upper bound off-normal temperature is defined by the maximum of 72-hour average of the ambient temperature. The lower and upper bound off-normal temperatures listed in Table 2.2.2 are intended to cover all ISFSI sites in the continent U.S. The 72-hour average of temperature used in the definition of the off-normal temperature recognizes the considerable thermal inertia of the HI-

STORM 100 storage system which reduces the effect of undulations in instantaneous temperature on the internals of the multi-purpose canister.

2.2.2.3 Design Temperatures

In addition to the normal *condition* design temperatures *which apply to long-term storage and short term normal operating conditions (e.g., MPC drying operations)*, we also define an "off-normal/accident condition temperature" pursuant to the provisions of NUREG-1536 and Regulatory Guide 3.61. This is, in effect, the ~~short-term~~ temperature which may exist during a ~~transition state or~~ a transient event (examples of such instances are ~~short-term temperature excursion during canister vacuum drying and backfilling operations (transition state)~~ *the overpack blocked air duct off-normal event* and fire *accident* ~~(transient event)~~). The off-normal/accident design temperatures of Table 2.2.3 are set down to bound the maximax (maximum in time and space) value of the thru-thickness average temperature of the structural or non-structural part, as applicable, during *the transient*a ~~short-term~~ event. These enveloping values, therefore, will bound the maximum temperature reached anywhere in the part, excluding skin effects during or immediately after, a ~~short-term~~*transient* event.

2.2.2.4 Leakage of One Seal

The *MPC enclosure vessel has is designed to be leak tight under all normal, off-normal, and hypothetical accident conditions of storage. Leakage from the confinement boundary is not credible.* ~~HI-STORM 100 System must withstand leakage of one seal in the radioactive material confinement boundary.~~

The confinement boundary is defined by the MPC shell, baseplate, MPC lid, port cover plates, ~~and~~ closure ring, *and associated welds*. Most confinement boundary welds are inspected by radiography or ultrasonic examination. Field welds are examined by the liquid penetrant method on the root (if more than one weld pass is required) and final weld passes. In addition to liquid penetrant examination, the MPC lid-to-shell weld is ~~leakage tested, hydrostatic~~*pressure* tested, and volumetrically examined or multi-pass liquid penetrant examined. The vent and drain port cover plates are *subject to*~~leakage tested in addition to the~~ liquid penetrant examination. These inspection and testing techniques are performed to verify the integrity of the confinement boundary.

~~Although leakage of one seal is not a credible accident because the MPC confinement boundary does not employ seals, a non-mechanistic leak of the confinement boundary is analyzed as an accident event in Chapter 11.~~

2.2.2.5 Partial Blockage of Air Inlets

The HI-STORM 100 System must withstand the partial blockage of the overpack air inlets. This event is conservatively defined as a complete blockage of two (2) of the four air inlets. Because the overpack air inlets and outlets are covered by fine mesh steel screens, located 90° apart, and inspected routinely (or alternatively, exit vent air temperature monitored), it is unlikely that all vents could become blocked by blowing debris, animals, etc. during normal and off-normal operations. Two of the air inlets are conservatively assumed to be completely blocked to demonstrate the inherent thermal stability of the HI-STORM 100 System.

2.2.2.6 Off-Normal HI-TRAC Handling

During upending and/or downending of the HI-TRAC 100 or HI-TRAC 125 transfer cask, the total lifted weight is distributed among both the upper lifting trunnions and the lower pocket trunnions. Each of the four trunnions on the HI-TRAC therefore supports approximately one-quarter of the total weight. This even distribution of the load would continue during the entire rotation operation. The HI-TRAC 125D transfer cask design does not include pocket trunnions. Therefore, the entire load is held by the lifting trunnions.

If the lifting device cables begin to "go slack" while upending or downending the HI-TRAC 100 or HI-TRAC 125, the eccentricity of the pocket trunnions would immediately cause the cask to pivot, restoring tension on the cables. Nevertheless, the pocket trunnions are conservatively analyzed to support one-half of the total weight, doubling the load per trunnion. This condition is analyzed to demonstrate that the pocket trunnions in the standard HI-TRAC design possess sufficient strength to support the increased load under this off-normal condition.

2.2.3 Environmental Phenomena and Accident Condition Design Criteria

Environmental phenomena and accident condition design criteria are defined in the following subsections.

The minimum acceptance criteria for the evaluation of the accident conditions are that the MPC confinement boundary maintains radioactive material confinement, the MPC fuel basket structure maintains the fuel contents subcritical, the stored SNF can be retrieved by normal means, and the system provides adequate shielding.

A discussion of the effects of each environmental phenomenon and accident condition is provided in Section 11.2. The consequences of each accident or environmental phenomenon are evaluated against the requirements of 10CFR72.106 and 10CFR20. Section 11.2 also provides the corrective action for each event. The location of the detailed analysis for each event is referenced in Section 11.2.

2.2.3.1 Handling Accident

The HI-STORM 100 System must withstand loads due to a handling accident. Even though the loaded HI-STORM 100 System will be lifted in accordance with approved, written procedures and may use lifting equipment which complies with ANSI N14.6-1993 [2.2.3], certain drop events are considered herein to demonstrate the defense-in-depth features of the design.

The loaded HI-STORM overpack will be lifted so that the bottom of the cask is at a height less than the vertical lift limit (see Table 2.2.8) above the ground. For conservatism, the postulated drop event assumes that the loaded HI-STORM 100 overpack falls freely from the vertical lift limit height before impacting a thick reinforced concrete pad. The deceleration of the cask must be maintained below 45 g's. Additionally, the overpack must continue to suitably shield the radiation emitted from the loaded MPC. The use of lifting devices designed in accordance with ANSI N14.6 having redundant drop protection features to lift the loaded overpack will eliminate the lift height limit. The

lift height limit is dependent on the characteristics of the impacting surface which are specified in Table 2.2.9. For site-specific conditions, which are not encompassed by Table 2.2.9, the licensee shall evaluate the site-specific conditions to ensure that the drop accident loads do not exceed 45 g's. The methodology used in this alternative analysis shall be commensurate with the analyses in Appendix 3.A and shall be reviewed by the Certificate Holder.

The loaded HI-TRAC will be lifted so that the lowest point on the transfer cask (i.e., the bottom edge of the cask/lid assemblage) is at a height less than the calculated horizontal lift height limit (see Table 2.2.8) above the ground, when lifted horizontally outside of the reactor facility. For conservatism, the postulated drop event assumes that the loaded HI-TRAC falls freely from the horizontal lift height limit before impact.

Analysis is provided that demonstrates that the HI-TRAC continues to suitably shield the radiation emitted from the loaded MPC, and that the HI-TRAC end plates (top lid and transfer lid for HI-TRAC 100 and HI-TRAC 125 and the top lid and pool lid for HI-TRAC 125D) remain attached. Furthermore, the HI-TRAC inner shell is demonstrated by analysis to not deform sufficiently to hinder retrieval of the MPC. The horizontal lift height limit is dependent on the characteristics of the impacting surface which are specified in Table 2.2.9. For site-specific conditions, which are not encompassed by Table 2.2.9, the licensee shall evaluate the site-specific conditions to ensure that the drop accident loads do not exceed 45 g's. The methodology used in this alternative analysis shall be commensurate with the *methodology described in this FSAR* ~~analyses in Appendix 3.AN~~ and shall be reviewed by the Certificate Holder. The use of lifting devices designed in accordance with ANSI N14.6 having redundant drop protection features during horizontal lifting of the loaded HI-TRAC outside of the reactor facilities eliminate the need for a horizontal lift height limit.

The loaded HI-TRAC, when lifted in the vertical position outside of the Part 50 facility shall be lifted with devices designed in accordance with ANSI N14.6 and having redundant drop protection features unless a site-specific analysis has been performed to determine a lift height limit. For vertical lifts of HI-TRAC with suitably designed lift devices, a vertical drop is not a credible accident for the HI-TRAC transfer cask and no vertical lift height limit is required to be established. Likewise, while the loaded HI-TRAC is positioned atop the HI-STORM 100 overpack for transfer of the MPC into the overpack (outside the Part 50 facility), the lifting equipment will remain engaged with the lifting trunnions of the HI-TRAC transfer cask or suitable restraints will be provided to secure the HI-TRAC. This ensures that a tip-over or drop from atop the HI-STORM 100 overpack is not a credible accident for the HI-TRAC transfer cask. The design criteria and conditions of use for MPC transfer operations from the HI-TRAC transfer cask to the HI-STORM 100 overpack at a Cask Transfer Facility are specified in ~~the HI-STORM 100 CoC, Appendix B, Section 3.5 and in~~ Subsection 2.3.3.1 of this FSAR.

The loaded MPC is lowered into the HI-STORM or HI-STAR overpack or raised from the overpack using the HI-TRAC transfer cask and a MPC lifting system designed in accordance with ANSI N14.6 and having redundant drop protection features. Therefore, the possibility of a loaded MPC falling freely from its highest elevation during the MPC transfer operations into the HI-STORM or HI-STAR overpacks is not credible.

The magnitude of loadings imparted to the HI-STORM 100 System due to drop events is heavily influenced by the compliance characteristics of the impacted surface. Two "pre-approved" concrete pad designs for storing the HI-STORM 100 System are presented in Table 2.2.9. Other ISFSI pad designs may be used provided the designs are reviewed by the Certificate Holder to ensure that impactive and impulsive loads under accident events such as cask drop and non-mechanistic tip-over are less than the design basis limits when analyzed using the methodologies established in this FSAR.

2.2.3.2 Tip-Over

The free-standing HI-STORM 100 System is demonstrated by analysis to remain kinematically stable under the design basis environmental phenomena (tornado, earthquake, etc.). However, the HI-STORM 100 ~~O~~overpack and MPC shall also withstand impacts due to a hypothetical tip-over event. The structural integrity of a loaded HI-STORM 100 System after a tip-over onto a reinforced concrete pad is demonstrated by analysis. The cask tip-over is not postulated as an outcome of any environmental phenomenon or accident condition. The cask tip-over is a non-mechanistic event.

The ISFSI pad for deploying a free-standing HI-STORM overpack must possess sufficient structural stiffness to meet the strength limits set forth in the ACI Code selected by the ISFSI owner. At the same time, the pad must be sufficiently compliant such that the maximum deceleration under a tip-over event is below the limit set forth in Table 3.1.2 of this FSAR.

During original licensing for the HI-ST*ORM*~~AR~~ 100 System, a single set of ISFSI pad and subgrade design parameters (now labeled Set A) was established. Experience has shown that achieving a maximum concrete compressive strength (at 28 days) of 4,200 psi can be difficult. Therefore, a second set of ISFSI pad and subgrade design parameters (labeled Set B) has been developed. The Set B ISFSI parameters include a thinner concrete pad and less stiff subgrade, which allow for a higher concrete compressive strength. Cask deceleration values for all design basis drop and tipover events with the HI-STORM 100 and HI-STORM 100S overpacks have been verified to be less than or equal to the design limit of 45 g's for both sets of ISFSI pad parameters.

The original set and the new set (Set B) of acceptable ISFSI pad and subgrade design parameters are specified in Table 2.2.9. Users may design their ISFSI pads and subgrade in compliance with either parameter Set A or Set B. Alternatively, users may design their site-specific ISFSI pads and subgrade using any combination of design parameters resulting in a structurally competent pad that meets the provisions of ACI-318 and also limits the deceleration of the cask to less than or equal to 45 g's for the design basis drop and tip-over events for the HI-STORM 100 and HI-STORM 100S overpacks. The structural analyses for site-specific ISFSI pad design shall be performed using methodologies consistent with those described in this FSAR, as applicable.

If the HI-STORM 100 cask is deployed in an anchored configuration (HI-STORM 100A), then tip-over of the cask is structurally precluded along with the requirement of target compliance, which warrants setting specific limits on the concrete compressive strength and subgrade Young's Modulus. Rather, at the so-called high seismic sites (ZPAs greater than the limit set forth in the CoC for free standing casks), the ISFSI pad must be sufficiently rigid to hold the anchor studs and maintain the integrity of the fastening mechanism embedded in the pad during the postulated seismic

event. The ISFSI pad must be designed to minimize a physical uplift during extreme environmental event (viz., tornado missile, DBE, etc.). The requirements on the ISFSI pad to render the cask anchoring function under long-term storage are provided in Section 2.0.4.

2.2.3.3 Fire

The possibility of a fire accident near an ISFSI site is considered to be extremely remote due to the absence of significant combustible materials. The only credible concern is related to a transport vehicle fuel tank fire engulfing the loaded HI-STORM 100 overpack or HI-TRAC transfer cask while it is being moved to the ISFSI.

The HI-STORM 100 System must withstand temperatures due to a fire event. The HI-STORM overpack and HI-TRAC transfer cask fire accidents for storage are conservatively postulated to be the result of the spillage and ignition of 50 gallons of combustible transporter fuel. The HI-STORM overpack and HI-TRAC transfer cask surfaces are considered to receive an incident radiation and forced convection heat flux from the fire. Table 2.2.8 provides the fire durations for the HI-STORM

100 overpack and HI-TRAC transfer cask based on the amount of flammable materials assumed. The temperature of fire is assumed to be 1475° F in accordance with 10CFR71.73.

The accident condition design temperatures for the HI-STORM 100 System, and the fuel rod cladding limits are specified in Table 2.2.3. The specified fuel cladding temperature limits are based on the ~~short-term~~ temperature limit specified in reports [2.2.13 and 2.2.15].

2.2.3.4 Partial Blockage of MPC Basket Vent Holes

The HI-STORM 100 System is designed to withstand reduction of flow area due to partial blockage of the MPC basket vent holes. As the MPC basket vent holes are internal to the confinement barrier, the only events that could partially block the vents are fuel cladding failure and debris associated with this failure, or the collection of crud at the base of the stored SNF assembly. The HI-STORM 100 System maintains the SNF in an inert environment with fuel rod cladding temperatures below accepted values (Table 2.2.3). Therefore, there is no credible mechanism for gross fuel cladding degradation during storage in the HI-STORM 100. For the storage of damaged BWR fuel assemblies or fuel debris, the assemblies and fuel debris will be placed in damaged fuel containers prior to placement in the MPC. The damaged fuel container is equipped with fine mesh screens which ensure that the damaged fuel and fuel debris will not escape to block the MPC basket vent holes. In addition, each MPC will be loaded once for long-term storage and, therefore, buildup of crud in the MPC due to numerous loadings is precluded. Using crud quantities reported in an Empire State Electric Energy Research Corporation Report [2.2.6], a layer of crud of conservative depth is assumed to partially block the MPC basket vent holes. The crud depths for the different MPCs are listed in Table 2.2.8.

2.2.3.5 Tornado

The HI-STORM 100 System must withstand pressures, wind loads, and missiles generated by a tornado. The prescribed design basis tornado and wind loads for the HI-STORM 100 System are consistent with NRC Regulatory Guide 1.76 [2.2.7], ANSI 57.9 [2.2.8], and ASCE 7-88 [2.2.2]. Table 2.2.4 provides the wind speeds and pressure drops which the HI-STORM 100 overpack must withstand while maintaining kinematic stability. The pressure drop is bounded by the accident condition MPC external design pressure.

The kinematic stability of the HI-STORM overpack, and continued integrity of the MPC confinement boundary, while within the storage overpack or HI-TRAC transfer cask, must be demonstrated under impact from tornado-generated missiles in conjunction with the wind loadings. Standard Review Plan (SRP) 3.5.1.4 of NUREG-0800 [2.2.9] stipulates that the postulated missiles include at least three objects: a massive high kinetic energy missile that deforms on impact (large missile); a rigid missile to test penetration resistance (penetrant missile); and a small rigid missile of a size sufficient to pass through any openings in the protective barriers (micro-missile). SRP 3.5.1.4 suggests an automobile for a large missile, a rigid solid steel cylinder for the penetrant missile, and a solid sphere for the small rigid missile, all impacting at 35% of the maximum horizontal wind speed of the design basis tornado. Table 2.2.5 provides the missile data used in the analysis, which is based on the above SRP guidelines. The effects of a large tornado missile are considered to bound the effects of a light general aviation airplane crashing on an ISFSI facility.

During horizontal handling of the loaded HI-TRAC transfer cask outside the Part 50 facility, tornado missile protection shall be provided to prevent tornado missiles from impacting either end of the HI-TRAC. The tornado missile protection shall be designed such that the large tornado missile cannot impact the bottom or top of the loaded HI-TRAC, while in the horizontal position. Also, the missile protection for the top of the HI-TRAC shall be designed to preclude the penetrant missile and micro-missile from passing through the penetration in the HI-TRAC top lid, while in the horizontal position. With the tornado missile protection in place, the impacting of a large tornado missile on either end of the loaded HI-TRAC or the penetrant missile or micro-missile entering the penetration of the top lid is not credible. Therefore, no analyses of these impacts are provided.

2.2.3.6 Flood

The HI-STORM 100 System must withstand pressure and water forces associated with a flood. Resultant loads on the HI-STORM 100 System consist of buoyancy effects, static pressure loads, and velocity pressure due to water velocity. The flood is assumed to deeply submerge the HI-STORM 100 System (see Table 2.2.8). The flood water depth is based on the hydrostatic pressure which is bounded by the MPC external pressure stated in Table 2.2.1.

It must be shown that the MPC does not collapse, buckle, or allow water in-leakage under the hydrostatic pressure from the flood.

The flood water is assumed to be nonstagnant. The maximum allowable flood water velocity is determined by calculating the equivalent pressure loading required to slide or tip over the HI-STORM 100 System. The design basis flood water velocity is stated in Table 2.2.8. Site-specific

safety reviews by the licensee must confirm that flood parameters do not exceed the flood depth, slide, or tip-over forces.

If the flood water depth exceeds the elevation of the top of the HI-STORM overpack inlet vents, then the cooling air flow would be blocked. The flood water may also carry debris which may act to block the air inlets of the HI-STORM 100 Overpack. Blockage of the air inlets is addressed in Subsection 2.2.3.12.

Most reactor sites are hydrologically characterized as required by Paragraph 100.10(c) of 10CFR100 and further articulated in Reg. Guide 1.59, "Design Basis Floods for Nuclear Power Plants" and Reg. Guide 1.102, "Flood Protection for Nuclear Power Plants." It is assumed that a complete characterization of the ISFSI's hydrosphere including the effects of hurricanes, floods, seiches and tsunamis is available to enable a site-specific evaluation of the HI-STORM 100 System for kinematic stability. An evaluation for tsunamis† for certain coastal sites should also be performed to demonstrate that sliding or tip-over will not occur and that the maximum flood depth will not be exceeded.

Analysis for each site for such transient hydrological loadings must be made for that site. It is expected that the plant licensee will perform this evaluation under the provisions of 10CFR72.212.

2.2.3.7 Seismic Design Loadings

The HI-STORM 100 System must withstand loads arising due to a seismic event and must be shown not to tip over during a seismic event. Subsection 3.4.7 contains calculations based on conservative static "incipient tipping" calculations which demonstrate static stability. The calculations in Section 3.4.7 result in the values reported in Table 2.2.8, which provide the maximum horizontal zero period acceleration (ZPA) versus vertical acceleration multiplier above which static incipient tipping would occur. This conservatively assumes the peak acceleration values of each of the two horizontal earthquake components and the vertical component occur simultaneously. The maximum horizontal ZPA provided in Table 2.2.8 is the vector sum of two horizontal earthquakes.

For anchored casks, the limit on zero period accelerations is set by the structural capacity of the sector lugs and anchoring studs. Table 2.2.8 provides the limits for HI-STORM 100A for the maximum vector sum of two horizontal earthquake peak ZPA's along with the coincident limit on the vertical ZPA.

2.2.3.8 100% Fuel Rod Rupture

The HI-STORM 100 System must withstand loads due to 100% fuel rod rupture. For conservatism, 100 percent of the fuel rods are assumed to rupture with 100 percent of the fill gas and 30% of the significant radioactive gases (e.g., H^3, Kr, and Xe) released in accordance with NUREG-1536. All

† A tsunami is an ocean wave from seismic or volcanic activity or from submarine landslides. A tsunami may be the result of nearby or distant events. A tsunami loading may exist in combination with wave splash and spray, storm surge and tides.

of the fill gas contained in non-fuel hardware, such as Burnable Poison Rod Assemblies (BPRAs) is also assumed to be released in analyzing this event.

2.2.3.9 Confinement Boundary Leakage

No credible scenario has been identified that would cause failure of the confinement system. *Section 7.1 provides a discussion as to why leakage of any magnitude from the MPC is not credible, based on the materials and methods of fabrication and inspection.* ~~To demonstrate the overall safety of the HI-STORM 100 System, the largest test leakage rate for the confinement boundary plus 50% for conservatism is assumed as the maximum credible confinement boundary leakage rate and 100 percent of the fuel rods are assumed to have failed. Under this accident condition, doses to an individual located at the boundary of the controlled area are calculated.~~

2.2.3.10 Explosion

The HI-STORM 100 System must withstand loads due to an explosion. The accident condition MPC external pressure and overpack pressure differential specified in Table 2.2.1 bounds all credible external explosion events. There are no credible internal explosive events since all materials are compatible with the various operating environments, as discussed in Section 3.4.1, *or appropriate preventive measures are taken to preclude internal explosive events (see Section 1.2.1.3.1.1).* The MPC is composed of stainless steel, ~~Boral~~*neutron absorber material*, and, *prior to CoC Amendment 2, possibly optional* aluminum alloy 1100 *heat conduction elements.*~~, all of which have a long proven history of use in fuel pools at nuclear power plants.~~ For these materials, *and considering the protective measures taken during loading and unloading operations* there is no credible ~~cause for an~~ internal explosive event.

2.2.3.11 Lightning

The HI-STORM 100 System must withstand loads due to lightning. The effect of lightning on the HI-STORM 100 System is evaluated in Chapter 11.

2.2.3.12 Burial Under Debris

The HI-STORM 100 System must withstand burial under debris. Such debris may result from floods, wind storms, or mud slides. Mud slides, blowing debris from a tornado, or debris in flood water may result in duct blockage, which is addressed in Subsection 2.2.3.13. The thermal effects of burial under debris on the HI-STORM 100 System is evaluated in Chapter 11. Siting of the ISFSI pad shall ensure that the storage location is not located near shifting soil. Burial under debris is a highly unlikely accident, but is analyzed in this FSAR.

2.2.3.13 100% Blockage of Air Inlets

For conservatism, this accident is defined as a complete blockage of all four bottom air inlets. Such a blockage may be postulated to occur during accident events such as a flood or tornado with blowing debris. The HI-STORM 100 System must withstand the temperature rise as a result of 100% blockage of the air inlets and outlets. The fuel cladding temperature must be shown to remain below the ~~short term~~ *off-normal/accident* temperature limit specified in Table 2.2.3.

2.2.3.14 Extreme Environmental Temperature

The HI-STORM 100 System must withstand extreme environmental temperatures. The extreme accident level temperature is specified in Table 2.2.2. The extreme accident level temperature occurs with steady-state insolation. This temperature is assumed to persist for a duration sufficient to allow the system to reach steady-state temperatures. The HI-STORM 100 Overpack and MPC have a large thermal inertia. Therefore, this temperature is assumed to persist over three days (3-day average).

2.2.3.15 Bounding Hydraulic, Wind, and Missile Loads for HI-STORM 100A

In the anchored configuration, the HI-STORM 100A System is clearly capable of withstanding much greater lateral loads than a free-standing overpack. Coastal sites in many areas of the world, particularly the land mass around the Pacific Ocean, may be subject to severe fluid inertial loads. Several publications [2.2.10, 2.2.11] explain and quantify the nature and source of such environmental hazards.

It is recognized that a lateral fluid load may also be accompanied by an impact force from a fluid borne missile (debris). Rather than setting specific limits for these loads on an individual basis, a limit on the static overturning base moment on the anchorage is set. This bounding overturning moment is given in Table 2.2.8 and is set at a level that ensures that structural safety margins on the sector lugs and on the anchor studs are essentially equal to the structural safety margins of the same components under the combined effect of the net horizontal and vertical seismic load limits in Table 2.2.8.The ISFSI owner bears the responsibility to establish that the lateral hydraulic, wind, and missile loads at his ISFSI site do not yield net overturning moments, when acting separately or together, that exceed the limit value in Table 2.2.8. If loadings are increased above those values for free-standing casks, their potential effect on the other portions of the cask system must be considered.

2.2.4 Applicability of Governing Documents

The ASME Boiler and Pressure Vessel Code (ASME Code), 1995 Edition, with Addenda through 1997 [2.2.1], is the governing code for the structural design of the MPC, the metal structure of the HI-STORM 100 overpack, and the HI-TRAC transfer cask, *except for Sections V and IX. The latest effective editions of ASME Section V and IX may be used, provided a written reconciliation of the later edition against the 1995 Edition, including addenda, is performed by the certificate holder.* The MPC enclosure vessel and fuel basket are designed in accordance with Section III, Subsections NB Class 1 and NG Class 1, respectively. The metal structure of the overpack and the HI-TRAC transfer

cask are designed in accordance with Section III, Subsection NF Class 3. The ASME Code is applied to each component consistent with the function of the component.

ACI 349 is the governing code for the plain concrete in the HI-STORM 100 overpack. ACI 318-95 is the applicable code utilized to determine the allowable compressive strength of the plain concrete credited during structural analysis. Appendix 1.D provides the sections of ACI 349 and ACI 318-95 applicable to the plain concrete.

Table 2.2.6 provides a summary of each structure, system and component (SSC) of the HI-STORM 100 System that is identified as important to safety, along with its function and governing Code. Some components perform multiple functions and in those cases, the most restrictive Code is applied. In accordance with NUREG/CR-6407, "Classification of Transportation Packaging and Dry Spent Fuel Storage System Components", and according to importance to safety, components of the HI-STORM 100 System are classified as A, B, C, or NITS (not important to safety) in Table 2.2.6. Section 13.1 provides the criteria used to classify each item. The classification of necessary auxiliary equipment is provided in Table 8.1.6.

Table 2.2.7 lists the applicable governing Code for material procurement, design, fabrication and inspection of the components of the HI-STORM 100 System. The ASME Code section listed in the design column is the section used to define allowable stresses for structural analyses.

Table 2.2.15 lists the ~~exceptions~~ *alternatives* to the ASME Code for the HI-STORM 100 System and the justification for those ~~exceptions~~*alternatives*.

The MPC *enclosure vessel and certain fuel basket designs* utilized in the HI-STORM 100 System *are*~~is~~ identical to the MPC *components* described in the SARs for the HI-STAR 100 System for storage (Docket 72-1008) and transport (Docket 71-9261). To avoid unnecessary repetition of the large numbers of stress analyses, ~~attention is directed in~~ this document *refers to those SARs, as applicable, if*~~to establish that~~ the MPC loadings for storage in the HI-STORM 100 System do not exceed those computed in the ~~referenced applications~~*HI-STAR documents*. Many of the loadings in the HI-STAR applications envelope the HI-STORM loadings on the MPC, and, therefore, a complete re-analysis of the MPC is not provided in the FSAR. *Certain individual MPC analyses may have been required to license a particular MPC fuel basket design for HI-STORM that was not previously licensed for HI-STAR. These unique analyses are summarized in the appropriate location in this FSAR.*

Table 2.2.16 provides a summary comparison between the loading elements. Table 2.2.16 shows that most of the loadings remain unchanged and several are less than the HI-STAR loading conditions. In addition to the magnitude of the loadings experienced by the MPC, the application of the loading must also be considered. Therefore, it is evident from Table 2.2.16 that the MPC stress limits can be ascertained to be qualified a priori if the HI-STAR analyses and the thermal loadings under HI-STORM storage are not more severe compared to previously analyzed HI-STAR conditions. In the analysis of each of the normal, off-normal, and accident conditions, the effect on the MPC is evaluated and compared to the corresponding condition analyzed in the HI-STAR 100 System SARs [2.2.4 and 2.2.5]. If the HI-STORM loading is greater than the HI-STAR loading or the loading is applied differently, the analysis of its effect on the MPC is evaluated in Chapter 3.

2.2.5 Service Limits

In the ASME Code, plant and system operating conditions are commonly referred to as normal, upset, emergency, and faulted. Consistent with the terminology in NRC documents, this FSAR utilizes the terms normal, off-normal, and accident conditions.

The ASME Code defines four service conditions in addition to the Design Limits for nuclear components. They are referred to as Level A, Level B, Level C, and Level D service limits, respectively. Their definitions are provided in Paragraph NCA-2142.4 of the ASME Code. The four levels are used in this FSAR as follows:

a. Level A Service Limits: Level A Service Limits are used to establish allowables for normal condition load combinations.

b. Level B Service Limits: Level B Service Limits are used to establish allowables for off-normal condition load combinations.

c. Level C Service Limits: Level C Service Limits are not used.

d. Level D Service Limits: Level D Service Limits are used to establish allowables for accident condition load combinations.

The ASME Code service limits are used in the structural analyses for definition of allowable stresses and allowable stress intensities. Allowable stresses and stress intensities for structural analyses are tabulated in Chapter 3. These service limits are matched with normal, off-normal, and accident condition loads combinations in the following subsections.

The MPC confinement boundary is required to meet Section III, Class 1, Subsection NB stress intensity limits. Table 2.2.10 lists the stress intensity limits for the Levels A, B, C, and D service limits for Class 1 structures extracted from the ASME Code (1995 Edition). The limits for the MPC fuel basket, required to meet the stress intensity limits of Subsection NG of the ASME Code, are listed in Table 2.2.11. Table 2.2.12 lists allowable stress limits for the steel structure of the HI-STORM overpack and HI-TRAC which are analyzed to meet the stress limits of Subsection NF, Class 3. Only service levels A, B, and D requirements, normal, off-normal, and accident conditions, are applicable.

2.2.6 Loads

Subsections 2.2.1, 2.2.2, and 2.2.3 describe the design criteria for normal, off-normal, and accident conditions, respectively. Table 2.2.13 identifies the notation for the individual loads that require consideration. The individual loads listed in Table 2.2.13 are defined from the design criteria. Each load is assigned a symbol for subsequent use in the load combinations.

The loadings listed in Table 2.2.13 fall into two broad categories; namely, (i) those that primarily affect kinematic stability, and (ii) those that produce significant stresses. The loadings in the former

category are principally applicable to the overpack. Tornado wind (W'), earthquake (E), and tornado-borne missile (M) are essentially loadings which can destabilize a cask. Analyses reported in Chapter 3 show that the HI-STORM 100 overpack structure will remain kinematically stable under these loadings. Additionally, for the missile impact case (M), analyses that demonstrate that the overpack structure remains unbreached by the postulated missiles are provided in Chapter 3.

Loadings in the second category produce global stresses that must be shown to comply with the stress intensity or stress limits, as applicable. The relevant loading combinations for the fuel basket, the MPC, the HI-TRAC and the HI-STORM overpack are different because of differences in their function. For example, the fuel basket does not experience a pressure loading because it is not a pressure vessel. The specific load combination for each component is specified in Subsection 2.2.7.

2.2.7 Load Combinations

To demonstrate compliance with the design requirements for normal, off-normal, and accident conditions of storage, the individual loads, identified in Table 2.2.13, are combined into load combinations. In the formation of the load combinations, it is recognized that the number of combinations requiring detailed analyses is reduced by defining bounding loads. Analyses performed using bounding loads serve to satisfy the requirements for analysis of a multitude of separately identified loads in combination.

For example, the values established for internal and external pressures (P_i and P_o) are defined such that they bound other surface-intensive loads, namely snow (S), tornado wind (W'), flood (F), and explosion (E^*). Thus, evaluation of pressure in a load combination established for a given storage condition enables many individual load effects to be included in a single load combination.

Table 2.2.14 identifies the combinations of the loads that are required to be considered in order to ensure compliance with the design criteria set forth in this chapter. Table 2.2.14 presents the load combinations in terms of the loads that must be considered together. A number of load combinations are established for each ASME Service Level. Within each loading case, there may be more than one analysis that is required to demonstrate compliance. Since the breakdown into specific analyses is most applicable to the structural evaluation, the identification of individual analyses with the applicable loads for each load combination is found in Chapter 3. Table 3.1.3 through 3.1.5 define the particular evaluations of loadings that demonstrate compliance with the load combinations of Table 2.2.14.

For structural analysis purposes, Table 2.2.14 serves as an intermediate classification table between the definition of the loads (Table 2.2.13 and Section 2.2) and the detailed analysis combinations (Tables 3.1.3 through 3.1.5).

Finally, it should be noted that the load combinations identified in NUREG-1536 are considered as applicable to the HI-STORM 100 System. The majority of load combinations in NUREG-1536 are directed toward reinforced concrete structures. Those load combinations applicable to steel structures are directed toward frame structures. As stated in NUREG-1536, Page 3-35 of Table 3-1, "Table 3-1 does not apply to the analysis of confinement casks and other components designed in accordance with Section III of the ASME B&PV Code." Since the HI-STORM 100 System is a

metal shell structure, with concrete primarily employed as shielding, the load combinations of NUREG-1536 are interpreted within the confines and intent of the ASME Code.

2.2.8 Allowable Stresses

The stress intensity limits for the MPC confinement boundary for the design condition and the service conditions are provided in Table 2.2.10. The MPC confinement boundary stress intensity limits are obtained from ASME Code, Section III, Subsection NB. The stress intensity limits for the MPC fuel basket are presented in Table 2.2.11 (governed by Subsection NG of Section III). The steel structure of the overpack and the HI-TRAC meet the stress limits of Subsection NF of ASME Code, Section III for plate and shell components. Limits for the Level D condition are obtained from Appendix F of ASME Code, Section III for the steel structure of the overpack. The ASME Code is not applicable to the HI-TRAC transfer cask for accident conditions, service level D conditions. The HI-TRAC transfer cask has been shown by analysis to not deform sufficiently to apply a load to the MPC, have any shell rupture, or have the top lid, pool lid, or transfer lid (as applicable) detach.

The following definitions of terms apply to the tables on stress intensity limits; these definitions are the same as those used throughout the ASME Code:

S_m: Value of Design Stress Intensity listed in ASME Code Section II, Part D, Tables 2A, 2B and 4

S_y: Minimum yield strength at temperature

S_u: Minimum ultimate strength at temperature

Table 2.2.1

DESIGN PRESSURES

Pressure Location	Condition	Pressure (psig)
MPC Internal Pressure	Normal	100
	Off-Normal	~~100~~ *110*
	Accident	200
MPC External Pressure	Normal	(0) Ambient
	Off-Normal	(0) Ambient
	Accident	60
Overpack External Pressure	Normal	(0) Ambient
	Off-Normal	(0) Ambient
	Accident	10 (differential pressure for 1 second maximum) or 5 (differential pressure steady state)
HI-TRAC Water Jacket	Normal	60
	Off-normal	60
	Accident	N/A (Under accident conditions, the water jacket is assumed to have lost all water thru the pressure relief valves)

Table 2.2.2

ENVIRONMENTAL TEMPERATURES

Condition	Temperature (°F)	Comments
HI-STORM 100 Overpack		
Normal Ambient (Bounding Annual Average)	80	
Normal Soil Temperature (Bounding Annual Average)	77	
Off-Normal Ambient (3-Day Average)	-40 and 100	-40°F with no insolation 100°F with insolation
Extreme Accident Level Ambient (3-Day Average)	125	125°F with insolation starting at steady-state off-normal high environment temperature
HI-TRAC Transfer Cask		
Normal (Bounding Annual Average)	100	
Off-Normal (3-Day Average)	0 and 100	0° F with no insolation 100° F with insolation

Note:

1. Handling operations with the loaded HI-STORM 100 overpack and HI-TRAC transfer cask are limited to working area ambient temperatures greater than or equal to 0°F as specified in Subsection 2.2.1.2. ~~and the Design Features section of Appendix B to the CoC.~~.

Table 2.2.3 ~~(continued)~~

DESIGN TEMPERATURES

HI-STORM 100 Component	*Long Term*, Normal Condition Design Temp*erature*, *Limits* (°F)	Short Term Operations, Off-Normal, and Accident Condition Temp*erature*, Limits† (°F)
MPC shell	~~450~~*500*	775
MPC basket	725	950
MPC ~~Boral~~ *Neutron Absorber*	800	950
MPC lid	550	775
MPC closure ring	400	775
MPC baseplate	400	775
MPC Heat Conduction Elements	725	950
HI-TRAC inner shell	400	600
HI-TRAC pool lid/transfer lid	350	700
HI-TRAC top lid	400	700
HI-TRAC top flange	400	700
HI-TRAC pool lid seals	350	N/A
HI-TRAC bottom lid bolts	350	700
HI-TRAC bottom flange	350	700
HI-TRAC top lid neutron shielding	300	~~300~~*350*
HI-TRAC radial neutron shield	307	N/A
HI-TRAC radial lead gamma shield	350	600
Remainder of HI-TRAC	350	700
Fuel Cladding	*752*	*752 or 1058 (Short Term Operations)††* *1058 (Off-normal and Accident Conditions)*
~~Zircaloy fuel cladding (5 year cooled)~~[1]	~~691(PWR)~~ ~~740(BWR)~~	~~1058~~
~~Zircaloy fuel cladding (6 year cooled)~~[1]	~~676(PWR)~~ ~~712(BWR)~~	~~1058~~
~~Zircaloy fuel cladding (7 year cooled)~~[1]	~~635(PWR)~~ ~~669(BWR)~~	~~1058~~

† For accident conditions that involve heating of the steel structures and no mechanical loading (such as the blocked air duct accident), the permissible metal temperature of the steel parts is defined by Table 1A of ASME Section II (Part D) for Section III, Class 3 materials as 700°F. For the ISFSI fire event, the maximum temperature limit for ASME Section 1 equipment is appropriate (850°F in Code Table 1A).

†† *See Section 4.5 for discussion of the 1058°F temperature limit for Moderate Burnup Fuel during MPC drying operations.*

Table 2.2.3 ~~(continued)~~

DESIGN TEMPERATURES

HI-STORM 100 Component	*Long Term*, Normal Condition Design Temp*erature*, *Limits* (°F)	Short Term Operations, Off-Normal, and Accident Condition Temp*erature*, Limits† (°F)
~~Zircaloy fuel cladding (10-year cooled)[1]~~	~~625(PWR) 658(BWR)~~	~~1058~~
~~Zircaloy fuel cladding (15-year cooled)[1]~~	~~614(PWR) 646(BWR)~~	~~1058~~
~~Zircaloy fuel cladding (5-year cooled)[2]~~	~~679 (PWR) 740 (BWR)~~	~~1058~~
~~Zircaloy fuel cladding (6-year cooled)[2]~~	~~660 (PWR) 712 (BWR)~~	~~1058~~
~~Zircaloy fuel cladding (7-year cooled)[2]~~	~~635 (PWR) 669 (BWR)~~	~~1058~~
~~Zircaloy fuel cladding (10-year cooled)[2]~~	~~621 (PWR) 658 (BWR)~~	~~1058~~
~~Zircaloy fuel cladding (15-year cooled)[2]~~	~~611 (PWR) 646 (BWR)~~	~~1058~~
Overpack outer shell	350	600
Overpack concrete	*300*~~200~~	350
Overpack inner shell	350	400
Overpack Lid Top *and Bottom* Plate	~~350~~ *450*	550
Remainder of overpack steel structure	350	400

~~NOTES: 1. Moderate Burnup Fuel~~
~~2. High Burnup Fuel (see Table 4.A.2)~~

Table 2.2.4

TORNADO CHARACTERISTICS

Condition	Value
Rotational wind speed (mph)	290
Translational speed (mph)	70
Maximum wind speed (mph)	360
Pressure drop (psi)	3.0

Table 2.2.5

TORNADO-GENERATED MISSILES

Missile Description	Mass (kg)	Velocity (mph)
Automobile	1800	126
Rigid solid steel cylinder (8 in. diameter)	125	126
Solid sphere (1 in. diameter)	0.22	126

TABLE 2.2.6

MATERIALS AND COMPONENTS OF THE HI-STORM 100 SYSTEM
MPC [1,2]

Primary Function	Component [3]	Safety Class [4]	Codes/Standards (as applicable to component)	Material	Strength (ksi)	Special Surface Finish/Coating	Contact Matl. (if dissimilar)
Confinement	Shell	A	ASME Section III; Subsection NB	Alloy X [5]	See Appendix 1.A	NA	NA
Confinement	Baseplate	A	ASME Section III; Subsection NB	Alloy X	See Appendix 1.A	NA	NA
Confinement	Lid	A	ASME Section III; Subsection NB	Alloy X	See Appendix 1.A	NA	NA
Confinement	Closure Ring	A	ASME Section III; Subsection NB	Alloy X	See Appendix 1.A	NA	NA
Confinement	Port Cover Plates	A	ASME Section III; Subsection NB	Alloy X	See Appendix 1.A	NA	NA
Criticality Control	Basket Cell Plates	A	ASME Section III; Subsection NG; *core support structures (NG-1121)*	Alloy X	See Appendix 1.A	NA	NA
Criticality Control	~~Boral~~ *Neutron Absorber*	A	Non-code	NA	NA	NA	Aluminum/SS
Shielding	Drain and Vent Shield Block	C	Non-code	Alloy X	See Appendix 1.A	NA	NA
Shielding	Plugs for Drilled Holes	NITS	Non-code	SA 193B8 (or equivalent)	See Appendix 1.A	NA	NA

Notes:
1) There are no known residuals on finished component surfaces
2) All welding processes used in welding the components shall be qualified in accordance with the requirements of ASME Section IX. All welds shall be made using welders qualified in accordance with ASME Section IX. Weld material shall meet the requirements of ASME Section II and the applicable Subsection of ASME Section III.
3) Component nomenclature taken from Bill of Materials in Chapter 1.
4) A, B, and C denote important to safety classifications as described in ~~Chapter 13~~ *the Holtec QA Program*. NITS stands for Not Important to Safety.
5) For details on Alloy X material, see Appendix 1.A.
6) Must be Type 304, 304LN, 316, or 316 LN with tensile strength ≥ 75 ksi, yield strength ≥ 30 ksi and chemical properties per ASTM A554.

TABLE 2.2.6

MATERIALS AND COMPONENTS OF THE HI-STORM 100 SYSTEM
MPC [1,2]

Primary Function	Component [3]	Safety Class [4]	Codes/Standards (as applicable to component)	Material	Strength (ksi)	Special Surface Finish/Coating	Contact Matl. (if dissimilar)
Structural Integrity	Upper Fuel Spacer Column	B	ASME Section III; Subsection NG (only for stress analysis)	Alloy X	See Appendix 1.A	NA	NA
Structural Integrity	Sheathing	A	Non-code	Alloy X	See Appendix 1.A	Aluminum/SS	NA
Structural Integrity	Shims	NITS	Non-code	Alloy X	See Appendix 1.A	NA	NA
Structural Integrity	Basket Supports (Angled Plates)	A	ASME Section III; Subsection NG; *internal structures (NG-1122)*	Alloy X	See Appendix 1.A	NA	NA
Structural Form	Basket Supports (Flat Plates)	NITS	Non-Code	Alloy X	See Appendix 1.A	NA	NA
Structural Integrity	Lift Lug	C	NUREG-0612	Alloy X	See Appendix 1.A	NA	NA
Structural Integrity	Lift Lug Baseplate	C	Non-code	Alloy X	See Appendix 1.A	NA	NA
Structural Integrity	Upper Fuel Spacer Bolt	NITS	Non-code	A193-B8 (or equiv.)	Per ASME Section II	NA	NA
Structural Integrity	Upper Fuel Spacer End Plate	B	Non-code	Alloy X	See Appendix 1.A	NA	NA
Structural Integrity	Lower Fuel Spacer Column	B	ASME Section III; Subsection NG (only for stress analysis)	Stainless Steel. See Note 6	See Appendix 1.A	NA	NA
Structural Integrity	Lower Fuel Spacer End Plate	B	Non-code	Alloy X	See Appendix 1.A	NA	NA

Notes:
1) There are no known residuals on finished component surfaces
2) All welding processes used in welding the components shall be qualified in accordance with the requirements of ASME Section IX. All welds shall be made using welders qualified in accordance with ASME Section IX. Weld material shall meet the requirements of ASME Section II and the applicable Subsection of ASME Section III.
3) Component nomenclature taken from Bill of Materials in Chapter 1.
4) A, B, and C denote important to safety classifications as described in ~~Chapter 13~~ *the Holtec QA Program*. NITS stands for Not Important to Safety.
5) For details on Alloy X material, see Appendix 1.A.
6) Must be Type 304, 304LN, 316, or 316 LN with tensile strength $\geq$ 75 ksi, yield strength $\geq$ 30 ksi and chemical properties per ASTM A554.

TABLE 2.2.6

MATERIALS AND COMPONENTS OF THE HI-STORM 100 SYSTEM
MPC [1,2]

Primary Function	Component [3]	Safety Class [4]	Codes/Standards (as applicable to component)	Material	Strength (ksi)	Special Surface Finish/Coating	Contact Matl. (if dissimilar)
Structural Integrity	Vent Shield Block Spacer	C	Non-code	Alloy X	See Appendix 1.A	NA	NA
Operations	Vent and Drain Tube	C	Non-code	S/S	Per ASME Section II	Thread area surface hardened	NA
Operations	Vent & Drain Cap	C	Non-code	S/S	Per ASME Section II	NA	NA
Operations	Vent & Drain Cap Seal Washer	NITS	Non-code	Aluminum	NA	NA	Aluminum/SS
Operations	Vent & Drain Cap Seal Washer Bolt	NITS	Non-code	Aluminum	NA	NA	NA
Operations	Reducer	NITS	Non-code	Alloy X	See Appendix 1.A	NA	NA
Operations	Drain Line	NITS	Non-code	Alloy X	See Appendix 1.A	NA	NA
Operations	Damaged Fuel Container	C	ASME Section III; Subsection NG	~~Primarily~~ 304 S/S, *except for locking spring, which may be any type of SS*	See Appendix 1.A	NA	NA
Operations	Drain Line Guide Tube	NITS	Non-code	S/S	NA	NA	NA

Notes:
1) There are no known residuals on finished component surfaces
2) All welding processes used in welding the components shall be qualified in accordance with the requirements of ASME Section IX. All welds shall be made using welders qualified in accordance with ASME Section IX. Weld material shall meet the requirements of ASME Section II and the applicable Subsection of ASME Section III.
3) Component nomenclature taken from Bill of Materials in Chapter 1.
4) A, B, and C denote important to safety classifications as described in ~~Chapter 13~~ *the Holtec QA Program*. NITS stands for Not Important to Safety.
5) For details on Alloy X material, see Appendix 1.A.
6) Must be Type 304, 304LN, 316, or 316 LN with tensile strength ≥ 75 ksi, yield strength ≥ 30 ksi and chemical properties per ASTM A554.

TABLE 2.2.6

MATERIALS AND COMPONENTS OF THE HI-STORM 100 SYSTEM OVERPACK [1,2]

Primary Function	Component [3]	Safety Class [4]	Codes/Standards (as applicable to component)	Material	Strength (ksi)	Special Surface Finish/Coating	Contact Matl. (if dissimilar)
Shielding	Radial Shield	B	ACI 349, App. 1-D	Concrete	See Table 1.D.1	NA	NA
Shielding	Shield Block Ring (100)	B	See Note 6	SA516-70	See Table 3.3.2	See Note 5	NA
Shielding	Lid Shield Ring (100S) and Shield Block Shell (100S)	B	ASME Section III; Subsection NF	SA516-70 or SA515-70	See Table 3.3.2	See Note 5	NA
Shielding	Shield Block Shell (100)	B	See Note 6	SA516-70 or SA515-70	See Table 3.3.2	See Note 5	NA
Shielding	Pedestal Shield	B	ACI 349, App. 1-D	Concrete	See Table 1.D.1	NA	NA
Shielding	Lid Shield	B	ACI 349, App. 1-D	Concrete	See Table 1.D.1	NA	NA
Shielding	Shield Shell (eliminated from design 6/01)	B	See Note 6	SA516-70	See Table 3.3.2	NA	NA
Shielding	Shield Block	B	ACI 349, App. 1-D	Concrete	See Table 1.D.1	NA	NA
Shielding	Gamma Shield Cross Plates & Tabs	C	Non-code	SA240-304	NA	NA	NA
Structural Integrity	Baseplate	B	ASME Section III; Subsection NF	SA516-70	See Table 3.3.3	See Note 5	NA
Structural Integrity	Outer Shell	B	ASME Section III; Subsection NF	SA516-70	See Table 3.3.2	See Note 5	NA
Structural Integrity	Inner Shell	B	ASME Section III; Subsection NF	SA516-70	See Table 3.3.2	See Note 5	NA
Concrete Form	Pedestal Shell	B	See Note 6	SA516-70	See Table 3.3.2	See Note 5	NA

Notes:
1) There are no known residuals on finished component surfaces
2) All welding processes used in welding the components shall be qualified in accordance with the requirements of ASME Section IX. All welds shall be made using welders qualified in accordance with ASME Section IX. Weld material shall meet the requirements of ASME Section II and the applicable Subsection of ASME Section III.
3) Component nomenclature taken from Bill of Materials in Chapter 1.
4) A, B, and C denote important to safety classifications as described in ~~Chapter 13.~~ *the Holtec QA Program.* NITS stands for Not Important to Safety.
5) All exposed steel surfaces (except threaded holes) to be painted with Thermaline 450 or equivalent.
6) Welds will meet AWS D1.1 requirements for prequalified welds, except that welder qualification and weld procedures of ASME Code Section IX may be substituted.

TABLE 2.2.6

MATERIALS AND COMPONENTS OF THE HI-STORM 100 SYSTEM OVERPACK [1,2]

Primary Function	Component [3]	Safety Class [4]	Codes/Standards (as applicable to component)	Material	Strength (ksi)	Special Surface Finish/Coating	Contact Matl. (if dissimilar)
Concrete Form	Pedestal Plate (100) Pedestal Baseplate (100S)	B	See Note 6	SA516-70 or SA515-70	See Table 3.3.2	See Table 3.3.2	NA
Structural Integrity	Lid Bottom Plate	B	ASME Section III; Subsection NF	SA516-70	See Table 3.3.2	See Note 5	NA
Structural Integrity	Lid Shell	B	ASME Section III; Subsection NF	SA516-70	See Table 3.3.2	See Note 5	NA
Structural Integrity	Inlet Vent Vertical & Horizontal Plates	B	ASME Section III; Subsection NF	SA516-70	See Table 3.3.2	See Note 5	NA
Thermal	Exit Vent Horizontal Plate (100)	B	See Note 6	SA516-70	See Table 3.3.2	See Note 5	NA
Thermal	Exit Vent Vertical/Side Plate	B	See Note 6	SA516-70 or SA515-70	See Table 3.3.2	See Note 5	NA
Structural Integrity	Top Plate, including shear ring	B	ASME Section III; Subsection NF	SA516-70	See Table 3.3.2	See Note 5	NA
Structural Integrity	Lid Top Plate, including shear ring	B	ASME Section III; Subsection NF	SA516-70	See Table 3.3.2	See Note 5	NA
Structural Integrity	Radial Plate	B	ASME Section III; Subsection NF	SA516-70	See Table 3.3.2	See Note 5	NA

Notes:
1) There are no known residuals on finished component surfaces
2) All welding processes used in welding the components shall be qualified in accordance with the requirements of ASME Section IX. All welds shall be made using welders qualified in accordance with ASME Section IX. Weld material shall meet the requirements of ASME Section II and the applicable Subsection of ASME Section III.
3) Component nomenclature taken from Bill of Materials in Chapter 1.
4) A, B, and C denote important to safety classifications as described in ~~Chapter 13.~~ *the Holtec QA Program.* NITS stands for Not Important to Safety.
5) All exposed steel surfaces (except threaded holes) to be painted with Thermaline 450 or equivalent.
6) Welds will meet AWS D1.1 requirements for prequalified welds, except that welder qualification and weld procedures of ASME Code Section IX may be substituted.

TABLE 2.2.6

MATERIALS AND COMPONENTS OF THE HI-STORM 100 SYSTEM OVERPACK [1,2]

Primary Function	Component [3]	Safety Class [4]	Codes/Standards (as applicable to component)	Material	Strength (ksi)	Special Surface Finish/Coating	Contact Matl. (if dissimilar)
Structural Integrity	Lid Stud & Nut	B	ASME Section II	SA564-630 or SA 193-B7 (stud) SA 194-2H (nut)	See Table 3.3.4	Threads to have cadmium coating (or similar lubricant for corrosion protection)	NA
Structural Integrity	100S Lid Washer	B	Non-Code	SA240-304	Per ASME Section II	NA	NA
Structural Integrity	Bolt Anchor Block	B	ASME Section III; Subsection NF ANSI N14.6	SA350-LF3 Or SA203E	See Table 3.3.3	See Note 5	NA
Structural Integrity	Channel	B	ASME Section III; Subsection NF	SA516-70 (galvanized) or SA240-304	See Table 3.3.2 or Table 3.3.1	See Note 5 (not applicable to SA240-304)	NA
Structural Integrity	Channel Mounts	B	ASME Section III; Subsection NF	A36 or equivalent	Per ASME Section II	See Note 5	NA
Structural Integrity	Pedestal Platform	B	ASME Section III; Subsection NF	SA516-70	See Table 3.3.2	See Note 5	NA
Operations	Storage Marking Nameplate	NITS	Non-code	SA240-304	NA	NA	NA
Operations	Exit Vent Screen Sheet	NITS	Non-code	SA240-304	NA	NA	NA
Operations	Drain Pipe	NITS	Non-code	C/S or S/S	NA	See Note 5	NA
Operations	Exit & Inlet Screen Frame	NITS	Non-code	SA240-304	NA	NA	NA

Notes:
1) There are no known residuals on finished component surfaces
2) All welding processes used in welding the components shall be qualified in accordance with the requirements of ASME Section IX. All welds shall be made using welders qualified in accordance with ASME Section IX. Weld material shall meet the requirements of ASME Section II and the applicable Subsection of ASME Section III.
3) Component nomenclature taken from Bill of Materials in Chapter 1.
4) A, B, and C denote important to safety classifications as described in ~~Chapter 13.~~ *the Holtec QA Program.* NITS stands for Not Important to Safety.
5) All exposed steel surfaces (except threaded holes) to be painted with Thermaline 450 or equivalent.
6) Welds will meet AWS D1.1 requirements for prequalified welds, except that welder qualification and weld procedures of ASME Code Section IX may be substituted.

TABLE 2.2.6

MATERIALS AND COMPONENTS OF THE HI-STORM 100 SYSTEM OVERPACK (1,2)

Primary Function	Component (3)	Safety Class (4)	Codes/Standards (as applicable to component)	Material	Strength (ksi)	Special Surface Finish/Coating	Contact Matl. (if dissimilar)
Operations	Temperature Element & Associated Temperature Monitoring Equipment	B	Non-code	NA	NA	NA	NA
Operations	Screen	NITS	Non-code	Mesh Wire	NA	NA	NA
Operations	Paint	NITS	Non-code	Thermaline 450 or equivalent	NA	NA	NA

Notes:
1) There are no known residuals on finished component surfaces
2) All welding processes used in welding the components shall be qualified in accordance with the requirements of ASME Section IX. All welds shall be made using welders qualified in accordance with ASME Section IX. Weld material shall meet the requirements of ASME Section II and the applicable Subsection of ASME Section III.
3) Component nomenclature taken from Bill of Materials in Chapter 1.
4) A, B, and C denote important to safety classifications as described in ~~Chapter 13.~~ *the Holtec QA Program.* NITS stands for Not Important to Safety.
5) All exposed steel surfaces (except threaded holes) to be painted with Thermaline 450 or equivalent.
6) Welds will meet AWS D1.1 requirements for prequalified welds, except that welder qualification and weld procedures of ASME Code Section IX may be substituted.

TABLE 2.2.6

MATERIALS AND COMPONENTS OF THE HI-STORM 100 SYSTEM
HI-TRAC TRANSFER CASK (1,2)

Primary Function	Component (3)	Safety Class (4)	Codes/Standards (as applicable to component)	Material	Strength (ksi)	Special Surface Finish/Coating	Contact Matl. (if dissimilar)
Shielding	Radial Lead Shield	B	Non-code	Lead	NA	NA	NA
Shielding	Pool Lid Lead Shield	B	Non-code	Lead	NA	NA	NA
Shielding	Top Lid Shielding	B	Non-code	Holtite	NA	NA	NA
Shielding	Plugs for Lifting Holes	NITS	Non-code	C/S	NA	NA	
Structural Integrity	Outer Shell	B	ASME Section III; Subsection NF	SA516-70	See Table 3.3.2	See Note 5	NA
Structural Integrity	Inner Shell	B	ASME Section III; Subsection NF	SA516-70	See Table 3.3.2	See Note 5	NA
Structural Integrity	Radial Ribs	B	ASME Section III; Subsection NF	SA516-70	See Table 3.3.2	See Note 5	NA
Structural Integrity	Water Jacket Enclosure Shell Panels (HI-TRAC 100 and 125)	B	ASME Section III; Subsection NF	SA516-70	See Table 3.3.2	See Note 5	NA
Structural Integrity	Water Jacket Enclosure Shell Panels (HI-TRAC 125D)	B	ASME Section III; Subsection NF	SA516-70 or SA515-70	See Table 3.3.2	See Note 5	NA
Structural Integrity	Water Jacket End Plate	B	ASME Section III; Subsection NF	SA516-70	See Table 3.3.2	See Note 5	NA
Structural Integrity	Top Flange	B	ASME Section III; Subsection NF	SA350-LF3	See Table 3.3.3	See Note 5	NA
Structural Integrity	Lower Water Jacket Shell	B	ASME Section III; Subsection NF	SA516-70	See Table 3.3.2	See Note 5	NA

Notes:
1) There are no known residuals on finished component surfaces
2) All welding processes used in welding the components shall be qualified in accordance with the requirements of ASME Section IX. All welds shall be made using welders qualified in accordance with ASME Section IX. Weld material shall meet the requirements of ASME Section II and the applicable Subsection of ASME Section III.
3) Component nomenclature taken from Bill of Materials in Chapter 1.
4) A, B, and C denote important to safety classifications as described in ~~Chapter 13~~ *the Holtec QA Program*. NITS stands for Not Important to Safety.
5) All external surfaces to be painted with Carboline 890. Inside surface of transfer cask to be painted with Thermaline 450.

TABLE 2.2.6

MATERIALS AND COMPONENTS OF THE HI-STORM 100 SYSTEM
HI-TRAC TRANSFER CASK [1,2]

Primary Function	Component [3]	Safety Class [4]	Codes/Standards (as applicable to component)	Material	Strength (ksi)	Special Surface Finish/Coating	Contact Matl. (if dissimilar)
Structural Integrity	Pool Lid Outer Ring	B	ASME Section III; Subsection NF	SA516-70 or SA 203E or SA350-LF3	See Table 3.3.3	See Note 5	NA
Structural Integrity	Pool Lid Top Plate	B	ASME Section III; Subsection NF	SA516-70	See Table 3.3.2	See Note 5	NA
Structural Integrity	Top Lid Outer Ring	B	ASME Section III; Subsection NF	SA516-70	See Table 3.3.2	See Note 5	NA
Structural Integrity	Top Lid Inner Ring	B	ASME Section III; Subsection NF	SA516-70	See Table 3.3.2	See Note 5	NA
Structural Integrity	Top Lid Top Plate	B	ASME Section III; Subsection NF	SA516-70	See Table 3.3.2	See Note 5	NA
Structural Integrity	Top Lid Bottom Plate	B	ASME Section III; Subsection NF	SA516-70	See Table 3.3.2	See Note 5	NA
Structural Integrity	Fill Port Plugs	C	ASME Section III; Subsection NF	Carbon Steel	See Table 3.3.2	See Note 5	NA

Notes:
1) There are no known residuals on finished component surfaces
2) All welding processes used in welding the components shall be qualified in accordance with the requirements of ASME Section IX. All welds shall be made using welders qualified in accordance with ASME Section IX. Weld material shall meet the requirements of ASME Section II and the applicable Subsection of ASME Section III.
3) Component nomenclature taken from Bill of Materials in Chapter 1.
4) A, B, and C denote important to safety classifications as described in ~~Chapter 13~~ *the Holtec QA Program*. NITS stands for Not Important to Safety.
5) All external surfaces to be painted with Carboline 890. Inside surface of transfer cask to be painted with Thermaline 450.

TABLE 2.2.6

MATERIALS AND COMPONENTS OF THE HI-STORM 100 SYSTEM
HI-TRAC TRANSFER CASK [1,2]

Primary Function	Component [3]	Safety Class [4]	Codes/Standards (as applicable to component)	Material	Strength (ksi)	Special Surface Finish/Coating	Contact Matl. (if dissimilar)
Structural Integrity	Pool Lid Bolt	B	ASME Section III; Subsection NF	SA193-B7	See Table 3.3.4	NA	NA
Structural Integrity	Lifting Trunnion Block	B	ASME Section III; Subsection NF ANSI N14.6	SA350-LF3	See Table 3.3.3	See Note 5	NA
Structural Integrity	Lifting Trunnion	A	ANSI N14.6	SB637 (N07718)	See Table 3.3.4	NA	NA
Structural Integrity	Pocket Trunnion (HI-TRAC 100 and HI-TRAC 125 only)	B	ASME Section III; Subsection NF ANSI N14.6	SA350-LF3	See Table 3.3.3	See Note 5	NA
Structural Integrity	Dowel Pins	B	ASME Section III; Subsection NF	SA564-630	See Table 3.3.4	NA	SA350-LF3
Structural Integrity	Water Jacket End Plate	B	ASME Section III; Subsection NF	SA516-70	See Table 3.3.2	See Note 5	NA
Structural Integrity	Pool Lid Bottom Plate	B	ASME Section III; Subsection NF	SA516-70	See Table 3.3.2	See Note 5	NA
Structural Integrity	Top Lid Lifting Block	C	ASME Section III; Subsection NF	SA516-70	See Table 3.3.2	See Note 5	NA
Structural Integrity	Bottom Flange Gussets (HI-TRAC 125D only)	B	ASME Section III; Subsection NF	SA516-70	See Table 3.3.2	NA	NA
Operations	Top Lid Stud or bolt	B	ASME Section III; Subsection NF	SA193-B7	See Table 3.3.4	NA	NA

Notes:
1) There are no known residuals on finished component surfaces
2) All welding processes used in welding the components shall be qualified in accordance with the requirements of ASME Section IX. All welds shall be made using welders qualified in accordance with ASME Section IX. Weld material shall meet the requirements of ASME Section II and the applicable Subsection of ASME Section III.
3) Component nomenclature taken from Bill of Materials in Chapter 1.
4) A, B, and C denote important to safety classifications as described in ~~Chapter 13~~ *the Holtec QA Program*. NITS stands for Not Important to Safety.
5) All external surfaces to be painted with Carboline 890. Inside surface of transfer cask to be painted with Thermaline 450.

TABLE 2.2.6

MATERIALS AND COMPONENTS OF THE HI-STORM 100 SYSTEM
HI-TRAC TRANSFER CASK [1,2]

Primary Function	Component [3]	Safety Class [4]	Codes/Standards (as applicable to component)	Material	Strength (ksi)	Special Surface Finish/Coating	Contact Matl. (if dissimilar)
Operations	Top Lid Nut	B	ASME Section III; Subsection NF	SA194-2H	NA	NA	NA
Operations	Pool Lid Gasket	NITS	Non-code	Elastomer	NA	NA	NA
Operations	Lifting Trunnion End Cap (HI-TRAC 100 and HI-TRAC 125 only)	C	Non-code	SA516-70	See Table 3.3.2	See Note 5	NA
Operations	End Cap Bolts (HI-TRAC 100 and HI-TRAC 125 only)	NITS	Non-code	SA193-B7	See Table 3.3.4	NA	NA
Operations	Drain Pipes	NITS	Non-code	SA106	NA	NA	NA
Operations	Drain Bolt	NITS	Non-code	SA193-B7	See Table 3.3.4	NA	NA
Operations	Couplings, Valves and Vent Plug	NITS	Non-code	Commercial	NA	NA	NA

Notes:
1) There are no known residuals on finished component surfaces
2) All welding processes used in welding the components shall be qualified in accordance with the requirements of ASME Section IX. All welds shall be made using welders qualified in accordance with ASME Section IX. Weld material shall meet the requirements of ASME Section II and the applicable Subsection of ASME Section III.
3) Component nomenclature taken from Bill of Materials in Chapter 1.
4) A, B, and C denote important to safety classifications as described in ~~Chapter 13~~ *the Holtec QA Program*. NITS stands for Not Important to Safety.
5) All external surfaces to be painted with Carboline 890. Inside surface of transfer cask to be painted with Thermaline 450.

TABLE 2.2.6

MATERIALS AND COMPONENTS OF THE HI-STORM 100 SYSTEM
HI-TRAC TRANSFER LID (HI-TRAC 100 and HI-TRAC 125 ONLY) (1,2)

Primary Function	Component (3)	Safety Class (4)	Codes/Standards (as applicable to component)	Material	Strength (ksi)	Special Surface Finish/Coating	Contact Matl. (if dissimilar)
Shielding	Side Lead Shield	B	Non-code	Lead	NA	NA	NA
Shielding	Door Lead Shield	B	Non-code	Lead	NA	NA	
Shielding	Door Shielding	B	Non-code	Holtite	NA	NA	NA
Structural Integrity	Lid Top Plate	B	ASME Section III; Subsection NF	SA516-70	See Table 3.3.2	See Note 5	NA
Structural Integrity	Lid Bottom Plate	B	ASME Section III; Subsection NF	SA516-70	See Table 3.3.2	See Note 5	NA
Structural Integrity	Lid Intermediate Plate	B	ASME Section III; Subsection NF	SA516-70	See Table 3.3.2	See Note 5	NA
Structural Integrity	Lead Cover Plate	B	ASME Section III; Subsection NF	SA516-70	See Table 3.3.2	See Note 5	NA
Structural Integrity	Lead Cover Side Plate	B	ASME Section III; Subsection NF	SA516-70	See Table 3.3.2	See Note 5	NA
Structural Integrity	Door Top Plate	B	ASME Section III; Subsection NF	SA516-70	See Table 3.3.2	See Note 5	NA
Structural Integrity	Door Middle Plate	B	ASME Section III; Subsection NF	SA516-70	See Table 3.3.2	See Note 5	NA
Structural Integrity	Door Bottom Plate	B	ASME Section III; Subsection NF	SA516-70	See Table 3.3.2	See Note 5	NA
Structural Integrity	Door Wheel Housing	B	ASME Section III; Subsection NF	SA516-70 (SA350-LF3)	See Table 3.3.2 (Table 3.3.3)	See Note 5	NA
Structural Integrity	Door Interface Plate	B	ASME Section III; Subsection NF	SA516-70	See Table 3.3.2	See Note 5	NA

Notes:
1) There are no known residuals on finished component surfaces
2) All welding processes used in welding the components shall be qualified in accordance with the requirements of ASME Section IX. All welds shall be made using welders qualified in accordance with ASME Section IX. Weld material shall meet the requirements of ASME Section II and the applicable Subsection of ASME Section III.
3) Component nomenclature taken from Bill of Materials in Chapter 1.
4) A, B, and C denote important to safety classifications as described in ~~Chapter 13~~ *the Holtec QA Program*. NITS stands for Not Important to Safety.
5) All external surfaces to be painted with Carboline 890. Top surface of doors to be painted with Thermaline 450.

TABLE 2.2.6

MATERIALS AND COMPONENTS OF THE HI-STORM 100 SYSTEM
HI-TRAC TRANSFER LID (HI-TRAC 100 and HI-TRAC 125 ONLY)[1,2]

Primary Function	Component [3]	Safety Class [4]	Codes/Standards (as applicable to component)	Material	Strength (ksi)	Special Surface Finish/Coating	Contact Matl. (if dissimilar)
Structural Integrity	Door Side Plate	B	ASME Section III; Subsection NF	SA516-70	See Table 3.3.2	See Note 5	NA
Structural Integrity	Wheel Shaft	C	ASME Section III; Subsection NF	SA 193-B7	36 (yield)	See Note 5	NA
Structural Integrity	Lid Housing Stiffener	B	ASME Section III; Subsection NF	SA516-70	See Table 3.3.2	See Note 5	NA
Structural Integrity	Door Lock Bolt	B	ASME Section III; Subsection NB	SA193-B7	See Table 3.3.4	NA	NA
Structural Integrity	Door End Plate	B	ASME Section III; Subsection NF	SA516-70	See Table 3.3.2	See Note 5	NA
Structural Integrity	Lifting Lug and Pad	B	ASME Section III; Subsection NF	SA516-70	See Table 3.3.2	See Note 5	NA
Operations	Wheel Track	C	ASME Section III; Subsection NF	SA-36	36 (yield)	See Note 5	NA
Operations	Door Handle	NITS	Non-code	C/S or S/S	NA	See Note 5	NA
Operations	Door Wheels	NITS	Non-code	Forged Steel	NA	NA	NA
Operations	Door Stop Block	C	Non-code	SA516-70	See Table 3.3.2	See Note 5	NA
Operations	Door Stop Block Bolt	C	Non-code	SA193-B7	See Table 3.3.4	NA	NA

Notes:
1) There are no known residuals on finished component surfaces
2) All welding processes used in welding the components shall be qualified in accordance with the requirements of ASME Section IX. All welds shall be made using welders qualified in accordance with ASME Section IX. Weld material shall meet the requirements of ASME Section II and the applicable Subsection of ASME Section III.
3) Component nomenclature taken from Bill of Materials in Chapter 1.
4) A, B, and C denote important to safety classifications as described in ~~Chapter 13~~ *the Holtec QA Program.* NITS stands for Not Important to Safety.
5) All external surfaces to be painted with Carboline 890. Top surface of doors to be painted with Thermaline 450.

Table 2.2.7

HI-STORM 100 ASME BOILER AND PRESSURE VESSEL CODE APPLICABILITY

HI-STORM 100 Component	Material Procurement	Design	Fabrication	Inspection
Overpack steel structure	Section II, Section III, Subsection NF, NF-2000	Section III, Subsection NF, NF-3200	Section III, Subsection NF, NF-4000	Section III, Subsection NF, NF-5350, NF-5360 and Section V
Anchor Studs for HI-STORM 100A	Section II, Section III, Subsection NF, NF-2000*	Section III, Subsection NF, NF- 3300	NA	NA
MPC confinement boundary	Section II, Section III, Subsection NB, NB-2000	Section III, Subsection NB, NB-3200	Section III, Subsection NB, NB-4000	Section III, Subsection NB, NB-5000 and Section V
MPC fuel basket	Section II, Section III, Subsection NG, NG-2000; *core support structures (NG-1121)*	Section III, Subsection NG, NG-3300 and NG-3200; *core support structures (NG-1121)*	Section III, Subsection NG, NG-4000; *core support structures (NG-1121)*	Section III, Subsection NG, NG-5000 and Section V; *core support structures (NG-1121)*
HI-TRAC Lifting Trunnions	Section II, Section III, Subsection NF, NF-2000	ANSI N14.6	Section III, Subsection NF, NF-4000	See Chapter 9
MPC basket supports *(Angled Plates)*	Section II, Section III, Subsection NG, NG-2000; *internal structures (NG-1122)*	Section III, Subsection NG, NG-3300 and NG-3200; *internal structures (NG-1122)*	Section III, Subsection NG, NG-4000; *internal structures (NG-1122)*	Section III, Subsection NG, NG-5000 and Section V; *internal structures (NG-1122)*
HI-TRAC steel structure	Section II, Section III, Subsection NF, NF-2000	Section III, Subsection NF, NF-3300	Section III, Subsection NF, NF-4000	Section III, Subsection NF, NF-5360 and Section V
Damaged fuel container	Section II, Section III, Subsection NG, NG-2000	Section III, Subsection NG, NG-3300 and NG-3200	Section III, Subsection NG, NG-4000	Section III, Subsection NG, NG-5000 and Section V
Overpack concrete	ACI 349 as specified by Appendix 1.D	ACI 349 and ACI 318-95 as specified by Appendix 1.D	ACI 349 as specified by Appendix 1.D	ACI 349 as specified by Appendix 1.D

* Except impact testing shall be determined based on service temperature and material type.

Table 2.2.8

ADDITIONAL DESIGN INPUT DATA FOR NORMAL, OFF-NORMAL, AND ACCIDENT CONDITIONS

Item	Condition	Value
Snow Pressure Loading (lb./ft^2)	Normal	100
Constriction of MPC Basket Vent Opening By Crud Settling (Depth of Crud, in.)	Accident	0.85 (MPC-68) 0.36 (MPC-24 and MPC-32)
Cask Environment During the Postulated Fire Event (Deg. F)	Accident	1475
HI-STORM Overpack Fire Duration (seconds)	Accident	217
HI-TRAC Transfer Cask Fire Duration (minutes)	Accident	4.8
Maximum submergence depth due to flood (ft)	Accident	125
Flood water velocity (ft/s)	Accident	15
Interaction Relation for Horizontal & Vertical *acceleration*~~ZPA (Zero Period Acceleration)~~ for HI-STORM	Accident	$G_H + 0.53G_V = 0.53$[††] (HI-STORM 100 and 100S) $G_H = 2.12$; $G_V = 1.5$ (HI-STORM 100A)
Net Overturning Moment at base of HI-STORM 100A (ft-lb)	Accident	18.7×10^6
HI-STORM 100 Overpack Vertical Lift Height Limit (in.)	Accident	11[†††] (HI-STORM 100 and 100S), OR By Users (HI-STORM 100A)
HI-TRAC Transfer Cask Horizontal Lift Height Limit (in.)	Accident	42[†††]

†† See Subsection 3.4.7.1 for definition of G_H and G_V. The coefficient of *friction*~~0.53~~ may be increased *above 0.53* based on testing described in Subsection 3.4.7.1

††† For ISFSI and subgrade design parameter Sets A and B. Users may also develop a site-specific lift height limit.

Table 2.2.9

EXAMPLES OF ACCEPTABLE ISFSI PAD DESIGN PARAMETERS

PARAMETER	PARAMETER SET "A" †	PARAMETER SET "B"
Concrete thickness, t_p, (inches)	≤ 36	≤ 28
Concrete Compressive Strength (at 28 days), f_c', (psi)	$\leq 4{,}200$	$\leq 6{,}000$ psi
Reinforcement Top and Bottom (both directions)	Reinforcing bar shall be 60 ksi Yield Strength ASTM Material	Reinforcing bar shall be 60 ksi Yield Strength ASTM Material
Subgrade Effective Modulus of Elasticity†† (measured prior to ISFSI pad installation), E, (psi)	$\leq 28{,}000$	$\leq 16{,}000$

NOTE: A static coefficient of friction of ≥ 0.53 between the ISFSI pad and the bottom of the overpack shall be verified by test. The test procedure shall follow the guidelines included in the Sliding Analysis in Subsection 3.4.7.1.

† The characteristics of this pad are identical to the pad considered by Lawrence Livermore Laboratory (see Appendix 3.A).

†† An acceptable method of defining the soil effective modulus of elasticity applicable to the drop and tipover analysis is provided in Table 13 of NUREG/CR-6608 with soil classification in accordance with ASTM-D2487 Standard Classification of Soils for Engineering Purposes (Unified Soil Classification System USCS) and density determination in accordance with ASTM-D1586 Standard Test Method for Penetration Test and Split/Barrel Sampling of Soils.

Table 2.2.10
MPC CONFINEMENT BOUNDARY STRESS INTENSITY LIMITS
FOR DIFFERENT LOADING CONDITIONS (ELASTIC ANALYSIS PER NB-3220)[†]

STRESS CATEGORY	DESIGN	LEVELS A & B	LEVEL D[††]
Primary Membrane, P_m	S_m	N/A[†††]	AMIN ($2.4S_m$, $.7S_u$)
Local Membrane, P_L	$1.5S_m$	N/A	150% of P_m Limit
Membrane plus Primary Bending	$1.5S_m$	N/A	150% of P_m Limit
Primary Membrane plus Primary Bending	$1.5S_m$	N/A	150% of P_m Limit
Membrane plus Primary Bending plus Secondary	N/A	$3S_m$	N/A
Average Shear Stress[††††]	$0.6S_m$	$0.6S_m$	$0.42S_u$

† Stress combinations including F (peak stress) apply to fatigue evaluations only.
†† Governed by Appendix F, Paragraph F-1331 of the ASME Code, Section III.
††† No Specific stress limit applicable.
†††† Governed by NB-3227.2 or F-1331.1(d).

Table 2.2.11

MPC BASKET STRESS INTENSITY LIMITS
FOR DIFFERENT LOADING CONDITIONS (ELASTIC ANALYSIS PER NG-3220)

STRESS CATEGORY	DESIGN	LEVELS A & B	LEVEL D[†]
Primary Membrane, P_m	S_m	S_m	AMIN ($2.4S_m$, $.7S_u$)[††]
Primary Membrane plus Primary Bending	$1.5S_m$	$1.5S_m$	150% of P_m Limit
Primary Membrane plus Primary Bending plus Secondary	N/A[†††]	$3S_m$	N/A

† Governed by Appendix F, Paragraph F-1331 of the ASME Code, Section III.
†† Governed by NB-3227.2 or F-1331.1(d).
††† No specific stress intensity limit applicable.

Table 2.2.12
STRESS LIMITS FOR DIFFERENT
LOADING CONDITIONS FOR THE STEEL STRUCTURE OF THE OVERPACK AND HI-TRAC
(ELASTIC ANALYSIS PER NF-3260)

		SERVICE CONDITION	
STRESS CATEGORY	**DESIGN + LEVEL A**	**LEVEL B**	**LEVEL D†**
Primary Membrane, P_m	S	1.33S	AMAX ($1.2S_y$, $1.5S_m$) but < $.7S_u$
Primary Membrane, P_m, plus Primary Bending, P_b	1.5S	1.995S	150% of P_m
Shear Stress (Average)	0.6S	0.6S	<$0.42S_u$

Definitions:

S = Allowable Stress Value for Table 1A, ASME Section II, Part D.
S_m = Allowable Stress Intensity Value from Table 2A, ASME Section II, Part D
S_u = Ultimate Strength

† Governed by Appendix F, Paragraph F-1332 of the ASME Code, Section III.

Table 2.2.13

NOTATION FOR DESIGN LOADINGS FOR NORMAL, OFF-NORMAL, AND ACCIDENT CONDITIONS

NORMAL CONDITION	
LOADING	**NOTATION**
Dead Weight	D
Handling Loads	H
Design Pressure (Internal)†	P_i
Design Pressure (External)†	P_o
Snow	S
Operating Temperature	T
OFF-NORMAL CONDITION	
Loading	Notation
Off-Normal Pressure (Internal)†	P_i
Off-Normal Pressure (External)†	P_o
Off-Normal Temperature	T'
Off-Normal HI-TRAC Handling	H'

† Internal Design Pressure P_i bounds the normal and off-normal condition internal pressures. External Design Pressure P_o bounds off-normal external pressures. Similarly, Accident pressures P_i^* and P_o^*, respectively, bound actual internal and external pressures under all postulated environment phenomena and accident events.

Table 2.2.13 (continued)

NOTATION FOR DESIGN LOADINGS FOR NORMAL, OFF-NORMAL, AND ACCIDENT CONDITIONS

ACCIDENT CONDITIONS	
LOADING	**NOTATION**
Handling Accident	H'
Earthquake	E
Fire	T^*
Tornado Missile	M
Tornado Wind	W'
Flood	F
Explosion	E^*
Accident Pressure (Internal)	P_i^*
Accident Pressure (External)	P_o^*

Table 2.2.14
APPLICABLE LOAD CASES AND COMBINATIONS FOR EACH CONDITION AND COMPONENT[†, ††]

CONDITION	LOADING CASE	MPC	OVERPACK	HI-TRAC
Design (ASME Code Pressure Compliance)	1	P_i, P_o	N/A	N/A
Normal (Level A)	1	D , T , H , P_i	D , T , H	D , T[†††] , H, $P_{i\,(water\ jacket)}$
	2	D , T , H , P_o	N/A	N/A
Off-Normal (Level B)	1	D , T', H , P_i	D , T' , H	N/A[†††] (H' pocket trunnion)
	2	D , T' , H , P_o	N/A	N/A
Accident (Level D)	1	D , T , P_i , H'	D , T , H'	D , T , H'
	2	D , T* , P_i*	N/A	N/A
	3	D , T , P_o*[††††]	D , T , P_o*[††††]	D , T , P_o*[††††]
	4	N/A	D, T, (E, M, F, W')[†††††]	D, T, (M, W')[†††††]

† The loading notations are given in Table 2.2.13. Each symbol represents a loading type and may have different values for different components. The different loads are assumed to be additive and applied simultaneously.

†† N/A stands for "Not Applicable."

††† T (normal condition) for the HI-TRAC is 100°F and $P_{i(water\ jacket)}$ is 60 psig and, therefore, there is no off-normal temperature or load combination because Load Case 1, Normal (Level A), is identical to Load Case 1, Off-Normal (Level B). Only the off-normal handling load on the pocket trunnion is analyzed separately.

†††† P_o* bounds the external pressure due to explosion.

††††† (E, M, F, W') means loads are considered separately in combination with D, T. E and F not applicable to HI-TRAC.

Table 2.2.15

LIST OF ASME CODE EXCEPTIONS FOR HI-STORM 100 SYSTEM

Component	Reference ASME Code Section/Article	Code Requirement	Exception, Justification & Compensatory Measures
MPC, MPC basket assembly, HI-STORM overpack steel structure, and HI-TRAC transfer cask steel structure.	*Subsection NCA*	*General Requirements. Requires preparation of a Design Specification, Design Report, Overpressure Protection Report, Certification of Construction Report, Data Report, and other administrative controls for an ASME Code stamped vessel.*	*Because the MPC, overpack, and transfer cask are not ASME Code stamped vessels, none of the specifications, reports, certificates, or other general requirements specified by NCA are required. In lieu of a Design Specification and Design Report, the HI-STORM FSAR includes the design criteria, service conditions, and load combinations for the design and operation of the HI-STORM 100 System as well as the results of the stress analyses to demonstrate that applicable Code stress limits are met. Additionally, the fabricator is not required to have an ASME-certified QA program. All important-to-safety activities are governed by the NRC-approved Holtec QA program.* *Because the cask components are not certified to the Code, the terms "Certificate Holder" and "Inspector" are not germane to the manufacturing of NRC-certified cask components. To eliminate ambiguity, the responsibilities assigned to the Certificate Holder in the various articles of Subsections NB, NG, and NF of the Code, as applicable, shall be interpreted to apply to the NRC Certificate of Compliance (CoC) holder (and by extension, to the component fabricator) if the requirement must be fulfilled. The Code term "Inspector" means the QA/QC personnel of the CoC holder and its vendors assigned to oversee and inspect the manufacturing process.*

Table 2.2.15 (continued)

LIST OF ASME CODE EXCEPTIONS FOR HI-STORM 100 SYSTEM

Component	Reference ASME Code Section/Article	Code Requirement	Exception, Justification & Compensatory Measures
MPC	NB-1100	Statement of requirements for Code stamping of components.	MPC enclosure vessel is designed and will be fabricated in accordance with ASME Code, Section III, Subsection NB to the maximum practical extent, but Code stamping is not required.
MPC basket supports and lift lugs	*NB-1130*	*NB-1132.2(d) requires that the first connecting weld of a nonpressure-retaining structural attachment to a component shall be considered part of the component unless the weld is more than 2t from the pressure-retaining portion of the component, where t is the nominal thickness of the pressure-retaining material.* *NB-1132.2(e) requires that the first connecting weld of a welded nonstructural attachment to a component shall conform to NB-4430 if the connecting weld is within 2t from the pressure-retaining portion of the component.*	*The MPC basket supports (nonpressure-retaining structural attachment)and lift lugs (nonstructural attachments (relative to the function of lifting a loaded MPC) that are used exclusively for lifting an empty MPC) are welded to the inside of the pressure-retaining MPC shell, but are not designed in accordance with Subsection NB. The basket supports and associated attachment welds are designed to satisfy the stress limits of Subsection NG and the lift lugs and associated attachment welds are designed to satisfy the stress limits of Subsection NF, as a minimum. These attachments and their welds are shown by analysis to meet the respective stress limits for their service conditions. Likewise, non-structural items, such as shield plugs, spacers, etc. if used, can be attached to pressure-retaining parts in the same manner.*

Table 2.2.15 (continued)

LIST OF ASME CODE EXCEPTIONS FOR HI-STORM 100 SYSTEM

Component	Reference ASME Code Section/Article	Code Requirement	Exception, Justification & Compensatory Measures
MPC	NB-2000	Requires materials to be supplied by ASME-approved material supplier.	Materials will be supplied by Holtec approved suppliers with Certified Material Test Reports (CMTRs) in accordance with NB-2000 requirements.
MPC, MPC basket assembly, HI-STORM overpack, and HI-TRAC transfer cask	*NB-3100* *NG-3100* *NF-3100*	*Provides requirements for determining design loading conditions, such as pressure, temperature, and mechanical loads.*	*These requirements are not applicable. The HI-STORM FSAR, serving as the Design Specification, establishes the service conditions and load combinations for the storage system.*
MPC	*NB-3350*	*NB-3352.3 requires, for Category C joints, that the minimum dimensions of the welds and throat thickness shall be as shown in Figure NB-4243-1.*	*Due to MPC basket-to-shell interface requirements, the MPC shell-to-baseplate weld joint design (designated Category C) does not include a reinforcing fillet weld or a bevel in the MPC baseplate, which makes it different than any of the representative configurations depicted in Figure NB-4243-1. The transverse thickness of this weld is equal to the thickness of the adjoining shell (1/2 inch). The weld is designed as a full penetration weld that receives VT and RT or UT, as well as final surface PT examinations. Because the MPC shell design thickness is considerably larger than the minimum thickness required by the Code, a reinforcing fillet weld that would intrude into the MPC cavity space is not included. Not including this fillet weld provides for a higher quality radiographic examination of the full penetration weld.* *From the standpoint of stress analysis, the fillet weld serves to reduce the local bending stress (secondary stress) produced by the gross structural discontinuity defined by the flat plate/shell junction. In the MPC design, the shell and baseplate thicknesses are well beyond that required to meet their respective membrane stress intensity limits.*

Table 2.2.15 (continued)

LIST OF ASME CODE EXCEPTIONS FOR HI-STORM 100 SYSTEM

Component	Reference ASME Code Section/Article	Code Requirement	Exception, Justification & Compensatory Measures
MPC, MPC basket assembly, HI-STORM overpack steel structure, and HI-TRAC transfer cask steel structure	*NB-4120* *NG-4120* *NF-4120*	*NB-4121.2, NG-4121.2, and NF-4121.2 provide requirements for repetition of tensile or impact tests for material subjected to heat treatment during fabrication or installation.*	*In-shop operations of short duration that apply heat to a component, such as plasma cutting of plate stock, welding, machining, coating, and pouring of lead are not, unless explicitly stated by the Code, defined as heat treatment operations.* *For the steel parts in the HI-STORM 100 System components, the duration for which a part exceeds the off-normal temperature limit defined in Chapter 2 of the FSAR shall be limited to 24 hours in a particular manufacturing process (such as the HI-TRAC lead pouring process).*
MPC, HI-STORM overpack steel structure, HI-TRAC transfer cask steel structure	*NB-4220* *NF-4220*	*Requires certain forming tolerances to be met for cylindrical, conical, or spherical shells of a vessel.*	*The cylindricity measurements on the rolled shells are not specifically recorded in the shop travelers, as would be the case for a Code-stamped pressure vessel. Rather, the requirements on inter-component clearances (such as the MPC-to-transfer cask) are guaranteed through fixture-controlled manufacturing. The fabrication specification and shop procedures ensure that all dimensional design objectives, including inter-component annular clearances are satisfied. The dimensions required to be met in fabrication are chosen to meet the functional requirements of the dry storage components. Thus, although the post-forming Code cylindricity requirements are not evaluated for compliance directly, they are indirectly satisfied (actually exceeded) in the final manufactured components.*

Table 2.2.15 (continued)

LIST OF ASME CODE EXCEPTIONS FOR HI-STORM 100 SYSTEM

Component	Reference ASME Code Section/Article	Code Requirement	Exception, Justification & Compensatory Measures
MPC Lid and Closure Ring Welds	NB-4243	Full penetration welds required for Category C Joints (flat head to main shell per NB-3352.3)	MPC lid and closure ring are not full penetration welds. They are welded independently to provide a redundant seal. Additionally, a weld efficiency factor of 0.45 has been applied to the analyses of these welds.
MPC Closure Ring, Vent and Drain Cover Plate Welds	NB-5230	Radiographic (RT) or ultrasonic (UT) examination required.	Root (if more than one weld pass is required) and final liquid penetrant examination to be performed in accordance with NB-5245. The MPC vent and drain cover plate welds are leak tested. The closure ring provides independent redundant closure for vent and drain cover plates.
MPC Lid *to Shell* Weld	NB-5230	Radiographic (RT) or ultrasonic (UT) examination required.	Only UT or multi-layer liquid penetrant (PT) examination is permitted. If PT examination alone is used, at a minimum, it will include the root and final weld layers and each approx. 3/8" of weld depth.
MPC Enclosure Vessel and Lid	NB-6111	All completed pressure retaining systems shall be pressure tested.	The MPC vessel is seal welded in the field following fuel assembly loading. The MPC vessel shall then be ~~hydrostatically~~ *pressure* tested as defined in Chapter ~~8~~*9*. Accessibility for leakage inspections preclude a Code compliant ~~hydrostatic~~ *pressure* test. All MPC enclosure vessel welds (except closure ring and vent/drain cover plate) are inspected by volumetric examination, except the MPC lid-to-shell weld shall be verified by volumetric or multi-layer PT examination. If PT alone is used, at a minimum, it must include the root and final layers and each approximately 3/8 inch of weld depth. For either UT or PT, the maximum undetectable flaw size must be demonstrated to be less than the critical flaw size. The critical flaw size must be determined in accordance with ASME Section XI methods. The critical flaw size shall not cause the primary stress limits of NB-3000 to be exceeded. The inspection ~~process~~*results*, including *relevant* findings (indications), shall be made a permanent part of the user's

Table 2.2.15 (continued)

LIST OF ASME CODE EXCEPTIONS FOR HI-STORM 100 SYSTEM

Component	Reference ASME Code Section/Article	Code Requirement	Exception, Justification & Compensatory Measures
			records by video, photographic, or other means which provide an equivalent retrievable record of weld integrity. The video or photographic records should be taken during the final interpretation period described in ASME Section V, Article 6,T-676. The vent/drain cover plate ~~weld is confirmed by leakage testing and liquid penetrant examination~~ and the closure ring welds *are* ~~is~~ confirmed by liquid penetrant examination. The inspection of the weld must be performed by qualified personnel and shall meet the acceptance requirements of ASME Code Section III, NB-5350 for PT or NB-5332 for UT.
MPC Enclosure Vessel	NB-7000	Vessels are required to have overpressure protection.	No overpressure protection is provided. Function of MPC enclosure vessel is to contain radioactive contents under normal, off-normal, and accident conditions of storage. MPC vessel is designed to withstand maximum internal pressure considering 100% fuel rod failure and maximum accident temperatures.
MPC Enclosure Vessel	NB-8000	States requirements for nameplates, stamping and reports per NCA-8000.	*The* HI-STORM 100 System *is* to be marked and identified in accordance with 10CFR71 and 10CFR72 requirements. Code stamping is not required. QA data package to be in accordance with Holtec approved QA program.
MPC Basket Assembly	NG-2000	Requires materials to be supplied by ASME approved Material Supplier.	Materials will be supplied by Holtec approved supplier with CMTRs in accordance with NG-2000 requirements.

Table 2.2.15 (continued)

LIST OF ASME CODE EXCEPTIONS FOR HI-STORM 100 SYSTEM

Component	Reference ASME Code Section/Article	Code Requirement	Exception, Justification & Compensatory Measures
MPC Basket Assembly	*NG-4420*	*NG-4427(a) requires a fillet weld in any single continuous weld may be less that the specified fillet weld dimension by not more than 1/16 inch, provided that the total undersize portion of the weld does not exceed 10 percent of the length of the weld. Individual undersize weld portions shall not exceed 2 inches in length.*	*Modify the Code requirement (intended for core support structures) with the following text prepared to accord with the geometry and stress analysis imperatives for the fuel basket: For the longitudinal MPC basket fillet welds, the following criteria apply: 1) The specified fillet weld throat dimension must be maintained over at least 92 percent of the total weld length. All regions of undersized weld must be less than 3 inches long and separated from each other by at least 9 inches. 2) Areas of undercuts and porosity beyond that allowed by the applicable ASME Code shall not exceed 1/2 inch in weld length. The total length of undercut and porosity over any 1-foot length shall not exceed 2 inches. 3) The total weld length in which items (1) and (2) apply shall not exceed a total of 10 percent of the overall weld length. The limited access of the MPC basket panel longitudinal fillet welds makes it difficult to perform effective repairs of these welds and creates the potential for causing additional damage to the basket assembly (e.g., to the neutron absorber and its sheathing) if repairs are attempted. The acceptance criteria provided in the foregoing have been established to comport with the objectives of the basket design and preserve the margins demonstrated in the supporting stress analysis.* *From the structural standpoint, the weld acceptance criteria are established to ensure that any departure from the ideal, continuous fillet weld seam would not alter the primary bending stresses on which the design of the fuel baskets is predicated. Stated differently, the permitted weld discontinuities are limited in size to ensure that they remain classifiable as local stress elevators ("peak stress", F, in the ASME Code for which specific stress intensity limits do not apply).*

Table 2.2.15 (continued)

LIST OF ASME CODE EXCEPTIONS FOR HI-STORM 100 SYSTEM

Component	Reference ASME Code Section/Article	Code Requirement	Exception, Justification & Compensatory Measures
MPC Basket Assembly	NG-8000	States requirements for nameplates, stamping and reports per NCA-8000.	The HI-STORM 100 System ~~will~~ *is to* be marked and identified in accordance with 10CFR71 and 10CFR72 requirements. No Code stamping is required. The MPC basket data package ~~will~~ *is to* be in conformance with Holtec's QA program.
Overpack Steel Structure	NF-2000	Requires materials to be supplied by ASME approved Material Supplier.	Materials will be supplied by Holtec approved supplier with CMTRs in accordance with NF-2000 requirements.
HI-TRAC Steel Structure	NF-2000	Requires materials to be supplied by ASME approved Material Supplier.	Materials will be supplied by Holtec approved supplier with CMTRs in accordance with NF-2000 requirements.
Overpack Baseplate and Lid Top Plate	NF-4441	Requires special examinations or requirements for welds where a primary member thickness of 1" or greater is loaded to transmit loads in the through thickness direction.	The ~~large~~ margins of safety in these welds under loads experienced during lifting operations or accident conditions are quite large~~ and warrant an exemption~~. The overpack baseplate welds to the inner shell, pedestal shell, and radial plates are only loaded during lifting conditions and have *large safety factors during lifting*. ~~a minimum safety factor of greater than 12 during lifting~~. *Likewise,* ~~T~~ *t*he top lid plate to lid shell weld has a *large structural margin under the inertia loads imposed during a non-mechanistic tipover event.* ~~safety factor greater than 6 under 45g's.~~

Table 2.2.15 (continued)

LIST OF ASME CODE EXCEPTIONS FOR HI-STORM 100 SYSTEM

Component	Reference ASME Code Section/Article	Code Requirement	Exception, Justification & Compensatory Measures
Overpack Steel Structure	NF-3256 *NF-3266*	Provides requirements for welded joints.	Welds for which no structural credit is taken are identified as "Non-NF" welds ion the design drawings ~~by an "*"~~. These non-structural welds are specified in accordance with the pre-qualified welds of AWS D1.1. These welds shall be made by welders and weld procedures qualified in accordance with AWS D1.1 or ASME Section IX. *Welds for which structural credit is taken in the safety analyses shall meet the stress limits for NF-3256.2, but are not required to meet the joint configuration requirements specified in these Code articles. The geometry of the joint designs in the cask structures are based on the fabricability and accessibility of the joint, not generally contemplated by this Code section governing supports.*
HI-STORM Overpack and HI-TRAC Transfer Cask	*NF-3320* *NF-4720*	*NF-3324.6 and NF-4720 provide requirements for bolting*	*These Code requirements are applicable to linear structures wherein bolted joints carry axial, shear, as well as rotational (torsional) loads. The overpack and transfer cask bolted connections in the structural load path are qualified by design based on the design loadings defined in the FSAR. Bolted joints in these components see no shear or torsional loads under normal storage conditions. Larger clearances between bolts and holes may be necessary to ensure shear interfaces located elsewhere in the structure engage prior to the bolts experiencing shear loadings (which occur only during side impact scenarios).* *Bolted joints that are subject to shear loads in accident conditions are qualified by appropriate stress analysis. Larger bolt-to-hole clearances help ensure more efficient operations in making these bolted connections, thereby minimizing time spent by operations personnel in a radiation area. Additionally, larger bolt-to-hole clearances allow interchangeability of the lids from one particular fabricated cask to another.*

Table 2.2.16

COMPARISON BETWEEN HI-STORM MPC LOADINGS WITH HI-STAR MPC LOADINGS†

Loading Condition	Difference Between MPC Loadings Under HI-STAR and HI-STORM Conditions
Dead Load	Unchanged
Design Internal Pressure (normal, off-normal, & accident)	Unchanged
Design External Pressure (normal, off-normal, & accident)	HI-STORM normal and off-normal external pressure is ambient which is less than the HI-STAR 40 psig. The accident external pressure is unchanged.
Thermal Gradient (normal, off-normal, & accident)	Determined by analysis in Chapters 3 and 4
Handling Load (normal)	Unchanged
Earthquake (accident)	Inertial loading increased less than 0.1g's (for free-standing overpack designs).
Handling Load (accident)	HI-STORM vertical and horizontal deceleration loadings are less than those in HI-STAR, but the HI-STORM cavity inner diameter is different and therefore the horizontal loading on the MPC is analyzed in Chapter 3.

† HI-STAR MPC loadings are those specified in HI-STAR SARs under Docket Numbers 71-9261 and 72-1008.

2.3 SAFETY PROTECTION SYSTEMS

2.3.1 General

The HI-STORM 100 System is engineered to provide for the safe long-term storage of spent nuclear fuel (SNF). The HI-STORM 100 will withstand all normal, off-normal, and postulated accident conditions without any uncontrolled release of radioactive material or excessive radiation exposure to workers or members of the public. Special considerations in the design have been made to ensure long-term integrity and confinement of the stored SNF throughout all cask operating conditions. The design considerations which have been incorporated into the HI-STORM 100 System to ensure safe long-term fuel storage are:

1. The MPC confinement barrier is an enclosure vessel designed in accordance with the ASME Code, Subsection NB with confinement welds inspected by radiography (RT) or ultrasonic testing (UT). Where RT or UT is not possible, a redundant closure system is provided with field welds which are ~~hydrostatically~~ *pressure* tested~~, helium leakage tested~~ and*/or* inspected by the liquid penetrant method *(see Section 9.1)*.

2. The MPC confinement barrier is surrounded by the HI-STORM overpack which provides for the physical protection of the MPC.

3. The HI-STORM 100 System is designed to meet the requirements of storage while maintaining the safety of the SNF.

4. The SNF once initially loaded in the MPC does not require opening of the canister for repackaging to transport the SNF.

5. The decay heat emitted by the SNF is rejected from the HI-STORM 100 System through passive means. No active cooling systems are employed.

It is recognized that a rugged design with large safety margins is essential, but that is not sufficient to ensure acceptable performance over the service life of any system. A carefully planned oversight and surveillance plan which does not diminish system integrity but provides reliable information on the effect of passage of time on the performance of the system is essential. Such a surveillance and performance assay program will be developed to be compatible with the specific conditions of the licensee's facility where the HI-STORM 100 System is installed. The general requirements for the acceptance testing and maintenance programs are provided in Chapter 9. Surveillance requirements are specified in the Technical Specifications in Appendix A to the CoC.

The structures, systems, and components of the HI-STORM 100 System designated as important to safety are identified in Table 2.2.6. Similar categorization of structures, systems, and components, which are part of the ISFSI, but not part of the HI-STORM 100 System, will be the

responsibility of the 10CFR72 licensee. For HI-STORM 100A, the ISFSI pad is designated ITS, Category C as discussed in Subsection 2.0.4.1.

2.3.2 Protection by Multiple Confinement Barriers and Systems

2.3.2.1 Confinement Barriers and Systems

The radioactivity which the HI-STORM 100 System must confine originates from the spent fuel assemblies and, to a lesser extent, the contaminated water in the fuel pool. This radioactivity is confined by multiple confinement barriers.

Radioactivity from the fuel pool water is minimized by preventing contact, removing the contaminated water, and decontamination.

An inflatable seal in the annular gap between the MPC and HI-TRAC, and the elastomer seal in the HI-TRAC pool lid prevent the fuel pool water from contacting the exterior of the MPC and interior of the HI-TRAC while submerged for fuel loading. The fuel pool water is drained from the interior of the MPC and the MPC internals are dried. The exterior of the HI-TRAC has a painted surface which is decontaminated to acceptable levels. Any residual radioactivity deposited by the fuel pool water is confined by the MPC confinement boundary along with the spent nuclear fuel.

The HI-STORM 100 System is designed with several confinement barriers for the radioactive fuel contents. Intact fuel assemblies have cladding which provides the first boundary preventing release of the fission products. Fuel assemblies classified as damaged fuel or fuel debris are placed in a damaged fuel container which restricts the release of fuel debris. The MPC is a seal welded enclosure which provides the confinement boundary. The MPC confinement boundary is defined by the MPC baseplate, shell, lid, closure ring, and port cover plates.

The MPC confinement boundary has been designed to withstand any postulated off-normal operations, internal change, or external natural phenomena. The MPC is designed to endure normal, off-normal, and accident conditions of storage with the maximum decay heat loads without loss of confinement. Designed in accordance with the ASME Code, Section III, Subsection NB, with certain NRC-approved alternatives, the MPC confinement boundary provides assurance that there will be no release of radioactive materials from the cask under all postulated loading conditions. Redundant closure of the MPC is provided by the MPC closure ring welds which provide a second barrier to the release of radioactive material from the MPC internal cavity. Therefore, no monitoring system for the confinement boundary is required.

Confinement is discussed further in Chapter 7. MPC field weld examinations, ~~hydrostatic~~ *and pressure* testing~~, and helium leak testing~~ are performed to verify the confinement function Fabrication inspections and tests are also performed, as discussed in Chapter 9, to verify the confinement boundary.

2.3.2.2 Cask Cooling

To facilitate the passive heat removal capability of the HI-STORM 100, several thermal design criteria are established for normal and off-normal conditions. They are as follows:

- The heat rejection capacity of the HI-STORM 100 System is deliberately understated by conservatively determining the design basis fuel *that maximizes thermal resistance (see Section 2.1.6)*. ~~The decay heat value in Table 2.1.6 is developed by computing the decay heat from the design basis fuel assembly which produces the highest heat generation rate for a given burnup.~~ Additional margin is built into the calculated cask cooling rate by using a*the* design basis fuel assembly *that*~~which~~ offers maximum resistance to *MPC internal helium circulation*~~the transmission of heat (minimum thermal conductivity)~~.

- The MPC fuel basket is formed by a honeycomb structure of stainless steel plates with full-length edge-welded intersections, which allows the unimpaired conduction of heat.

- The MPC confinement boundary ensures that the helium atmosphere inside the MPC is maintained during normal, off-normal, and accident conditions of storage and transfer. The MPC confinement boundary maintains the helium confinement atmosphere below the design temperatures and pressures stated in Table 2.2.3 and Table 2.2.1, respectively.

- The MPC thermal design maintains the fuel rod cladding temperatures below the values stated in Chapter 4 such that fuel cladding is not degraded during the long term storage period.

- The HI-STORM is optimally designed with cooling vents and an MPC to overpack annulus which maximize air flow, while providing superior radiation shielding. The vents and annulus allow cooling air to circulate past the MPC removing the decay heat.

2.3.3 Protection by Equipment and Instrumentation Selection

2.3.3.1 Equipment

Design criteria for the HI-STORM 100 System are described in Section 2.2. The HI-STORM 100 System may include use of ancillary or support equipment for ISFSI implementation. Ancillary equipment and structures utilized outside of the reactor facility's 10CFR Part 50 structures may be broken down into two broad categories, namely Important to Safety (ITS) ancillary equipment and Not Important to Safety (NITS) ancillary equipment. NUREG/CR-6407, "Classification of Transportation Packaging and Dry Spent Fuel Storage System Components According to Importance to Safety", provides guidance for the determination of a

component's safety classification. Certain ancillary equipment (such as trailers, rail cars, skids, portable cranes, transporters, or air pads) are not required to be designated as ITS for most ISFSI implementations, if the HI-STORM 100 is designed to withstand the failure of these components.

The listing and ITS designation of ancillary equipment in Table 8.1.6 follows NUREG/CR-6407. ITS ancillary equipment utilized in activities that occur outside the 10CFR Part 50 structure shall be engineered to meet all functional, strength, service life, and operational safety requirements to ensure that the design and operation of the ancillary equipment is consistent with the intent of this Safety Analysis Report. The design for these components shall consider the following information, as applicable:

1. Functions and boundaries of the ancillary equipment
2. The environmental conditions of the ISFSI site, including tornado-borne missile, tornado wind, seismic, fire, lightning, explosion, ambient humidity limits, flood, tsunami and any other environmental hazards unique to the site.
3. Material requirements including impact testing requirements
4. Applicable codes and standards
5. Acceptance testing requirements
6. Quality assurance requirements
7. Foundation type and permissible loading
8. Applicable loads and load combinations
9. Pre-service examination requirements
10. In-use inspection and maintenance requirements
11. Number and magnitude of repetitive loading significant to fatigue
12. Insulation and enclosure requirements (on electrical motors and machinery)
13. Applicable Reg. Guides and NUREGs.
14. Welding requirements
15. Painting, marking, and identification requirements
16. Design Report documentation requirements
17. Operational and Maintenance (O&M) Manual information requirements

All design documentation shall be subject to a review, evaluation, and safety assessment process in accordance with the provisions of the QA program described in Chapter 13.

Users may effectuate the inter-cask transfer of the MPC between the HI-TRAC transfer cask and either the HI-STORM 100 or the HI-STAR 100 overpack in a location of their choice, depending upon site-specific needs and capabilities. For those users choosing to perform the MPC inter-cask transfer *using devices not integral to structures*~~outside of a facility~~ governed by the regulations of 10 CFR Part 50 (e.g., fuel handling or reactor building), a Cask Transfer Facility (CTF) is required. The CTF is a stand-alone facility located on-site, near the ISFSI that incorporates or is compatible with lifting devices designed to lift a loaded or unloaded HI-TRAC transfer cask, place it atop the overpack, and transfer the loaded MPC to or from the

overpack. The detailed design criteria which must be followed for the design and operation of the CTF are set down in Paragraphs A through R below.

The inter-cask transfer operations consist of the following potential scenarios of MPC transfer:

- Transfer between a HI-TRAC transfer cask and a HI-STORM overpack
- Transfer between a HI-TRAC transfer cask and a HI-STAR 100 overpack

In both scenarios, the standard design HI-TRAC is mounted on top of the overpack (HI-STAR 100, HI-STORM 100, HI-STORM 100S) and the MPC transfer is carried out by opening the transfer lid doors located at the bottom of the HI-TRAC transfer cask and by moving the MPC vertically to the cylindrical cavity of the recipient cask. For the HI-TRAC 125D design, the MPC transfer is carried out in a similar fashion, except that there is no transfer lid involved - the pool lid is removed while the transfer cask is mounted atop the HI-STORM overpack with the HI-STORM mating device located between the two casks (see Figure 1.2.18). However, the devices utilized to lift the HI-TRAC cask to place it on the overpack and to vertically transfer the MPC may be of stationary or mobile type.

The specific requirements for the CTF employing stationary and mobile lifting devices are somewhat different. The requirements provided in the following specification for the CTF apply to both types of lifting devices, unless explicitly differentiated in the text.

A. General Specifications:

i. The cask handling functions which may be required of the Cask Transfer Facility include:

a. Upending and downending of a HI-STAR 100 overpack on a flatbed rail car or other transporter (see Figure 2.3.1 for an example).

b. Upending and downending of a HI-TRAC transfer cask on a heavy-haul transfer trailer or other transporter (see Figure 2.3.2 for an example)

c. Raising and placement of a HI-TRAC transfer cask on top of a HI-STORM 100 overpack for MPC transfer operations (see Figure 2.3.3 for an example of the cask arrangement with the standard design HI-TRAC transfer cask. The HI-TRAC 125D design would include the mating device and no transfer lid).

d. Raising and placement of a HI-TRAC transfer cask on top of a HI-STAR 100 overpack for MPC transfer operations (see Figure

2.3.4 for an example of the cask arrangement with the standard design HI-TRAC transfer cask. The HI-TRAC 125D design would include the mating device and no transfer lid).

e. MPC transfer between the HI-TRAC transfer cask and the HI-STORM overpack.

f. MPC transfer between the HI-TRAC transfer cask and the HI-STAR 100 overpack.

ii. Other Functional Requirements:

The CTF should possess facilities and capabilities to support cask operations such as :

a. Devices and areas to support installation and removal of the HI-STORM overpack lid.

b. Devices and areas to support installation and removal of the HI-STORM 100 overpack vent shield block inserts.

c. Devices and areas to support installation and removal of the HI-STAR 100 closure plate.

d. Devices and areas to support installation and removal of the HI-STAR 100 transfer collar.

e. Features to support positioning and alignment of the HI-STORM overpack and the HI-TRAC transfer cask.

f. Features to support positioning and alignment of the HI-STAR 100 overpack and the HI-TRAC transfer cask.

g. Areas to support jacking of a loaded HI-STORM overpack for insertion of a translocation device underneath.

h. Devices and areas to support placement of an empty MPC in the HI-TRAC transfer cask or HI-STAR 100 overpack

i. Devices and areas to support receipt inspection of the MPC, HI-TRAC transfer cask, HI-STORM overpack, and HI-STAR overpack.

j. Devices and areas to support installation and removal of the HI-STORM mating device (HI-TRAC 125D only).

iii. Definitions:

The components of the CTF covered by this specification consist of all structural members, lifting devices, and foundations which bear all or a significant portion of the dead load of the transfer cask or the multi-purpose canister during MPC transfer operations. The definitions of key terms not defined elsewhere in this FSAR and used in this specification are provided below. The following terms are used to define key components of the CTF.

- Connector Brackets: The mechanical part used in the load path which connects to the cask trunnions. A fabricated weldment, slings, and turnbuckles are typical examples of connector brackets.

- CTF structure: The CTF structure is the stationary, anchored portion of the CTF which provides the required structural function to support MPC transfer operations, including lateral stabilization of the HI-TRAC transfer cask and, if required, the overpack, to protect against seismic events. The MPC lifter, if used in the CTF design, is integrated into the CTF structure (see Lifter Mount).

- HI-TRAC lifter(s): The HI-TRAC lifter is the mechanical lifting device, typically consisting of jacks or hoists, that is utilized to lift a loaded or unloaded HI-TRAC to the required elevation in the CTF so that it can be mounted on the overpack.†

- Lifter Mount: A beam-like structure (part of the CTF structure) that supports the HI-TRAC and MPC lifter(s).

- Lift Platform: The lift platform is the intermediate structure that transfers the vertical load of the HI-TRAC transfer cask to the HI-TRAC lifters.

† The term overpack is used in this specification as a generic term for the HI-STAR 100 and the various HI-STORM overpacks.

- Mobile crane: A mobile crane is a device defined in ASME B30.5-1994, Mobile and Locomotive Cranes. A mobile crane may be used in lieu of the HI-TRAC lifter and/or an MPC lifter provided all requirements set forth in this subsection are satisfied.

- MPC lifter: The MPC lifter is a mechanical lifting device, typically consisting of jacks or hoists, that is utilized to vertically transfer the MPC between the HI-TRAC transfer cask and the overpack.

- Pier: The portion of the reinforced concrete foundation which projects above the concrete floor of the CTF.

- Single-Failure-Proof (SFP): A single-failure-proof handling device is one wherein all directly loaded tension and compression members are engineered to satisfy the enhanced safety criteria given in of NUREG-0612.

- Translocation Device: A low vertical profile device used to laterally position an overpack such that the bottom surface of the overpack is fully supported by the top surface of the device. Typical translocation devices are air pads and Hillman rollers.

iv. Important to Safety Designation:

All components and structures which comprise the CTF shall be given an ITS category designation in accordance with a written procedure which is consistent with NUREG/CR-6407 and ~~Chapter 13 of this FSAR~~*the Holtec quality assurance program*.

B. Environmental and Design Conditions

i. Lowest Service Temperature (LST): The LST for the CTF is 0°F (consistent with the specification for the HI-TRAC transfer cask in Subsection 3.1.2.3).

ii. Snow and Ice Load, S: The CTF structure shall be designed to withstand the dead weight of snow and ice for unheated structures as set forth in ASCE 7-88 [2.2.2] for the specific ISFSI site.

iii. Tornado Missile, M, and Tornado Wind,W': The tornado wind and tornado-generated missile data applicable to the HI-STORM 100 System (Tables 2.2.4 and 2.2.5) will be used in the design of the CTF structure unless existing site design basis data or a probabilistic risk assessment (PRA) for the CTF site with due consideration of short operation durations indicates that a less severe tornado missile impact or wind loading on the CTF structure can be postulated. The PRA analysis can be performed in the manner of the EPRI Report NP-2005, "Tornado Missile Simulation and Design Methodology Computer Code Manual". USNRC Reg. Guide 1.117 and Section 2.2.3 of NUREG-800 may be used for guidance in establishing the appropriate tornado missile and wind loading for the CTF structure.

The following additional clarifications apply to the large tornado missile (4,000 lb. automobile) in Tables 2.2.4 and 2.2.5 in the CTF structure analysis:

- The missile has a planform area of 20 sq. ft. and impact force characteristics consistent with the *HI-TRAC missile impact analysis.*~~set forth in Appendix 3.AN (Section 3.AN.3).~~

- The large missile can strike the CTF structure in any orientation up to an elevation of 15 feet.

If the site tornado missile data developed by the ISFSI owner suggests that tornado missiles of greater kinetic energies than that postulated in this FSAR (Table 2.2.4 and 2.2.5) should be postulated for CTF during its use, then the integrity analysis of the CTF structure shall be carried out under the site-specific tornado missiles. This situation would also require the HI-TRAC transfer cask and the overpack to be re-evaluated under the provisions of 10CFR72.212 and 72.48.

The wind speed specified in this FSAR (Tables 2.2.4 and 2.2.5), likewise, shall be evaluated for their applicability to the site. Lower or higher site-specific wind velocity, compared to the design basis values cited in this FSAR shall be used if justified by appropriate analysis, which may include PRA.

Intermediate penetrant missile and small missiles postulated in this FSAR are not considered to be a credible threat to the functional integrity of the CTF structure and, therefore, need not be considered.

iv. Flood: The CTF will be assumed to be flooded to the highest elevation for the CTF facility determined from the local meteorological data. The flood velocity shall be taken as the largest value defined for the ISFSI site.

v. Lightning: Meteorological data for the region surrounding the ISFSI site shall be used to specify the applicable lightning input to the CTF structure for personnel safety evaluation purposes.

vi. Water Waves (Tsunami, Y): Certain coastal CTF sites may be subject to sudden, short duration waves of water, denoted in the literature by various terms, such as tsunami. If the applicable meteorological data for the CTF site indicates the potential of such water-borne loadings on the CTF structure, then such a loading, with due consideration of the short duration of CTF operations, shall be defined for the CTF structure.

vii. Design Basis Earthquake (DBE), E: The DBE event applicable to the CTF facility pursuant to 10CFR100, Appendix A, shall be specified. The DBE should be specified as a set of response spectra or acceleration time-histories for use in the CTF structural and impact consequence analyses.

viii. Design Temperature: All material properties used in the stress analysis of the CTF structure shall utilize a reference design temperature of 150°F.

C. Heavy Load Handling:

i. Apparent dead load, D*: The dead load of all components being lifted shall be increased in the manner set forth in Subsection 3.4.3 to define the Apparent Dead Load, D*.

ii. NUREG-0612 Conformance:

The Connector Bracket, HI-TRAC lifter, and MPC lifter shall comply with the guidance provided in NUREG-0612 (1980) for single failure proof devices. Where the geometry of the lifting device is different from the configurations contemplated by NUREG-0612, the following exceptions apply:

a. Mobile cranes at the CTF shall conform to the guidelines of Section 5.1.1 of NUREG-0612 with the exception that mobile

cranes shall meet the requirements of ANSI B30.5, "Mobile and Locomotive Cranes", in lieu of the requirements of ANSI B30.2, "Overhead and Gantry Cranes". The mobile crane used shall have a minimum safety factor of two over the allowable load table for the crane in accordance with Section 5.1.6(1)(a) of NUREG-0612, and shall be capable of stopping and holding the load during a DBE event.

b. Section 5.1.6(2) of NUREG-0612 specifies that new cranes should be designed to meet the requirements of NUREG-0554. For mobile cranes, the guidance of Section 5.1.6(2) of NUREG-0612 does not apply.

iii. Defense-in-Depth Measures:

a. The lift platform and the lifter mount shall be designed to ensure that the stresses produced under the apparent dead load, D*, are less than the Level A (normal condition) stress limits for ASME Section III, Subsection NF, Class 3, linear structures.

b. The CTF structure shall be designed to ensure that the stresses produced in it under the apparent dead load, D*, are less than the Level A (normal condition) stress limits for ASME Section III, Subsection NF, Class 3, linear structures.

c. Maximum deflection of the lift platform and the lifter mount under the apparent dead load shall comply with the limits set forth in CMAA-70.

d. When the HI-TRAC transfer cask is stacked on the overpack, HI-TRAC shall be either held by the lifting device or laterally restrained by the CTF structure. Furthermore, when the HI-TRAC transfer cask is placed atop the overpack, the overpack shall be laterally restrained from uncontrolled movement, if required by the analysis specified in Subsection 2.3.3.1.N.

e. The design of the lifting system shall ensure that the lift platform (or lift frame) is held horizontal at all times and that the symmetrically situated axial members are symmetrically loaded.

f. In order to minimize occupational radiation exposure to ISFSI personnel, design of the MPC lifting attachment (viz., sling) should not require any human activity inside the HI-TRAC cylindrical space.

g. The HI-TRAC lifter and MPC lifter shall possess design features to avoid side-sway of the payload during lifting operations.

h. The lifter (HI-TRAC and MPC) design shall ensure that any electrical malfunction in the motor or the power supply will not lead to an uncontrolled lowering of the load.

i. The kinematic stability of HI-TRAC or HI-STORM standing upright in an unrestrained configuration (if such a condition exists during the use of the CTF) shall be analytically evaluated and ensured under all postulated extreme environmental phenomena loadings for the CTF facility.

iv. Shielding Surety:

The design of the HI-TRAC and MPC lifters shall preclude the potential for the MPC to be removed, completely or partially, from the cylindrical space formed by the HI-TRAC and the underlying overpack.

v. Specific Requirements for Mobile Cranes:

A mobile crane, if used in the CTF in the role of the HI-TRAC lifter or MPC lifter is governed in part by ANSI/ASME N45.2.15 with technical requirements specified in ANSI B30.5 (1994).

When lifting the MPC from an overpack to the HI-TRAC transfer cask, limit switches or load limiters shall be set to ensure that the mobile crane is prevented from lifting loads in excess of 110% of the loaded MPC weight.

An analysis of the consequences of a potential MPC vertical drop which conforms to the guidelines of Appendix A to NUREG-0612 shall be performed. The analysis shall demonstrate that a postulated drop would not result in the MPC experiencing a deceleration in excess of its design basis deceleration specified in this FSAR.

vi. Lift Height Limitation: The HI-TRAC lift heights shall be governed by the Technical Specifications.

vii. Control of Side Sway: Procedures shall provide provisions to ensure that the load is lifted essentially vertically with positive control of the load. Key cask lifting and transfer procedures, as determined by the user, should be reviewed by the Certificate Holder before their use.

D. Loads and Load Combinations for the CTF Structure

The applicable loadings for the CTF have been summarized in paragraph B in the preceding. A stress analysis of the CTF structure shall be performed to demonstrate compliance with the Subsection NF stress limits for Class 3 linear structures for the service condition germane to each load combination. Table 2.3.2 provides the load combinations (the symbols in Table 2.3.2 are defined in the preceding text and in Table 2.2.13).

E. Materials and Failure Modes

i. Acceptable Materials and Material Properties: All materials used in the design of the CTF shall be ASTM approved or equal, consistent with the ITS category of the part. Reinforced concrete, if used, shall comply with the provisions of ACI 318 (89). The material property and allowable stress values for all steel structurals shall be taken from the ASME and B&PV Code, Section II, wherever such data is available; otherwise, the data provided in the ASTM standards shall be used.

ii. Brittle Fracture: All structural components in the CTF structure and the lift platform designated as primary load bearing shall have an NDTT equal to 0°F or lower (consistent with the ductile fracture requirements for ASME Section III, Subsection NF, Class 3 structures).

iii. Fatigue: Fatigue failure modes of primary structural members in the CTF structure whose failure may result in uncontrolled lowering of the HI-TRAC transfer cask or the MPC (critical members) shall be evaluated. A minimum factor of safety of 2 on the number of permissible loading cycles on the critical members shall apply.

iv. Buckling: For all critical members in the CTF structure (defined above), potential failure modes through buckling under axial compression shall be considered. The margin of safety against buckling shall comply with the provisions of ASME Section III, Subsection NF, for Class 3 linear structures.

F. CTF Pad

A reinforced concrete pad in conformance with the specification for the ISFSI pad set forth in this FSAR (see Table 2.2.9) may be used in the region of the CTF where the overpack and HI-TRAC are stacked for MPC transfer. Alternatively, the pad may be designed using the guidelines of ACI-318(89).

G. Miscellaneous Components

Hoist rings, turnbuckles, slings, and other appurtenances which are in the load path during heavy load handling at the CTF shall be single-failure-proof.

H. Structural Welds

All primary structural welds in the CTF structure shall comply with the specifications of ASME Section III for Class 3 NF linear structures.

I. Foundation

The design of the CTF structure foundation and piers, including load combinations, shall be in accordance with ACI-318(89).

J. Rail Access

The rail lines that enter the Cask Transfer Facility shall be set at grade level with no exposed rail ties or hardware other than the rail itself.

K. Vertical Cask Crawler/Translocation Device Access (If Required)

i. The cask handling bay in the CTF shall allow access of a vertical cask crawler or translocation device carrying a transfer cask or overpack. The building floor shall be equipped with a smooth transition to the cask travel route such that the vertical cask crawler tracks do not have to negotiate sharp lips or slope transitions and the translocation devices have a smooth transition. Grading of exterior aprons shall be no more than necessary to allow water drainage.

ii. If roll-up doors are used, the roll up doors shall have no raised threshold that could damage the vertical cask crawler tracks (if a crawler is used).

iii. Exterior aprons shall be of a material that will not be damaged by the vertical cask crawler tracks, if a crawler is used.

L. Facility Floor

i. The facility floor shall be sufficiently flat to allow optimum handling of casks with a translocation device.

ii. Any floor penetrations, in areas where translocation device operations may occur, shall be equipped with flush inserts.

iii. The rails, in areas where translocation device operations may occur shall be below the finish level of the floor. Flush inserts, if necessary, shall be sized for installation by hand.

M. Cask Connector Brackets

i. Primary lifting attachments between the cask and the lifting platform are the cask connector brackets. The cask connector brackets may be lengthened or shortened to allow for differences in the vehicle deck height of the cask delivery vehicle and the various lifting operations. The connector brackets shall be designed to perform cask lifting, upending and downending functions. The brackets shall be designed in accordance with ANSI N14.6 [Reference 2.2.3] and load tested at 300% of the load applied to them during normal handling.

ii. The connector brackets shall be equipped with a positive engagement to ensure that the cask lifting attachments do not become inadvertently disconnected during a seismic event and during normal cask handling operations.

iii. The design of the connector brackets shall ensure that the HI-TRAC transfer cask is fully secured against slippage during MPC transfer operations.

N. Cask Restraint System

A time-history analysis of the stacked overpack/HI-TRAC transfer cask assemblage under the postulated ISFSI Level D events in Table 2.3.2 shall be performed to demonstrate that a minimum margin of safety of 1.1 against overturning or kinematic instability exists and that the CTF structure complies with the applicable stress limits (Table 2.3.2) and that the maximum permissible deceleration loading specified in the FSAR is not exceeded. If required to meet the minimum margin of safety of 1.1, a cask restraining system shall be incorporated into the design of the Cask Transfer Facility to provide lateral restraint to the overpack (HI-STORM or HI-STAR 100).

O. Design Life

The Cask Transfer Facility shall be constructed to have a minimum design life of 40 years.

P. Testing Requirements

In addition to testing recommended in NUREG-0612 (1980), a structural adequacy test of the CTF structure at 125% of its operating load prior to its first use in a cask loading campaign shall be performed. This test should be performed in accordance with the guidance provided in the CMAA Specification 70 [2.2.16].

Q. Quality Assurance Requirements

All components of the CTF shall be manufactured in full compliance with the quality assurance requirements applicable to the ITS category of the component as set forth in *the Holtec QA program.* ~~Chapter 13 of this FSAR.~~

R. Documentation Requirements

i. O&M Manual: An Operations and Maintenance Manual shall be prepared which contains, at minimum, the following items of information:

- Maintenance Drawings
- Operating Procedures

ii. Design Report: A QA-validated design report documenting full compliance with the provisions of this specification shall be prepared

and archived for future reference in accordance with the provisions of ~~Chapter 13 of this FSAR~~ *the Holtec QA progam.*

2.3.3.2 Instrumentation

As a consequence of the passive nature of the HI-STORM 100 System, instrumentation which is important to safety is not necessary. No instrumentation is required or provided for HI-STORM 100 storage operations, other than normal security service instruments and TLDs.

However, in lieu of performing the periodic inspection of the HI-STORM overpack vent screens, temperature elements may be installed in two of the overpack exit vents to continuously monitor the air temperature. If the temperature elements and associated temperature monitoring instrumentation are used, they shall be designated important to safety as specified in Table 2.2.6.

The temperature elements and associated temperature monitoring instrumentation provided to monitor the air outlet temperature shall be suitable for a temperature range of -40°F to 500°F. At a minimum, the temperature elements and associated temperature monitoring instrumentation shall be calibrated for the temperatures of 32°F (ice point), 212°F (boiling point), and 449°F (melting point of tin) with an accuracy of +/- 4°F.

2.3.4 Nuclear Criticality Safety

The criticality safety criteria stipulates that the effective neutron multiplication factor, k_{eff}, including statistical uncertainties and biases, is less than 0.95 for all postulated arrangements of fuel within the cask under all credible conditions.

2.3.4.1 Control Methods for Prevention of Criticality

The control methods and design features used to prevent criticality for all MPC configurations are the following:

a. Incorporation of permanent neutron absorbing material ~~(Boral™)~~ in the MPC fuel basket walls.

b. Favorable geometry provided by the MPC fuel basket

Additional control methods used to prevent criticality for the MPC-24, MPC-24E, and MPC-24EF (all with higher enriched fuel), and the MPC-32 *and MPC-32F* are the following:

a. Loading of PWR fuel assemblies must be performed in water with a minimum boron content as specified in Table 2.1.14 *or 2.1.16, as applicable.*

b. Prevention of fresh water entering the MPC internals.

Administrative controls ~~specified as Technical Specifications and Approved Contents are provided in Appendices A and B to the CoC, respectively, and~~ shall be used to ensure that fuel placed in the HI-STORM 100 System meets the requirements described in Chapters 2 and 6. All appropriate criticality analyses are presented in Chapter 6.

2.3.4.2 Error Contingency Criteria

Provision for error contingency is built into the criticality analyses performed in Chapter 6. Because biases and uncertainties are explicitly evaluated in the analysis, it is not necessary to introduce additional contingency for error.

2.3.4.3 Verification Analyses

In Chapter 6, critical experiments are selected which reflect the design configurations. These critical experiments are evaluated using the same calculation methods, and a suitable bias is incorporated in the reactivity calculation.

2.3.5 Radiological Protection

2.3.5.1 Access Control

As required by 10CFR72, uncontrolled access to the ISFSI is prevented through physical protection means. A peripheral fence with an appropriate locking and monitoring system is a standard approach to limit access. The details of the access control systems and procedures, including division of the site into radiation protection areas, will be developed by the licensee (user) of the ISFSI utilizing the HI-STORM 100 System.

2.3.5.2 Shielding

The shielding design is governed by 10CFR72.104 and 10CFR72.106 which provide radiation dose limits for any real individual located at or beyond the nearest boundary of the controlled area. The individual must not receive doses in excess of the limits given in Table 2.3.1 for normal, off-normal, and accident conditions.

The objective of shielding is to assure that radiation dose rates at key locations are *as low as practical in order to maintain occupational doses to operating personnel As Low As Reasonably Achievable (ALARA) and to meet the requirements of 10 CFR 72.104 and 10 CFR 106 for dose at the controlled area boundary.* ~~below acceptable levels for those locations.~~ Three locations are of particular interest in the storage mode:

- immediate vicinity of the cask
- restricted area boundary
- controlled area (site) boundary

Dose rates in the immediate vicinity of the loaded overpack are important in consideration of occupational exposure. *Conservative evaluations of dose rate have been performed and are described in Chapter 5 based on the contents of the BWR and PWR MPCs allowed by the CoC. Actual dose rates in operation will be lower than those reported in Chapter 5 for the following reasons:*

- *The shielding evaluation model has a number of conservatisms, as discussed in Chapter 5.*
- *No single cask will likely contain design basis fuel in each fuel storage location and the full compliment of non-fuel hardware allowed by the CoC.*
- *No single cask will contain fuel and non-fuel hardware at the limiting burnups and cooling times allowed by the CoC.*

Consistent with 10 CFR 72, there is no single dose rate limit established for the HI-STORM 100 System. Compliance with the regulatory limits on occupational and controlled area doses is performance-based, as demonstrated by dose monitoring performed by each cask A design objective for the maximum average radial surface dose rate has been established as ~~60~~ *100* mrem/hr. Areas adjacent to the inlet and exit vents which pass through the radial shield are limited to 60 mrem/hr. The average dose rate at the top of the overpack is limited to below 60 mrem/hr. Chapter 5 of this FSAR presents the analyses and evaluations to establish HI-STORM 100 compliance with these design objectives.

Because of the passive nature of the HI-STORM 100 *System*, human activity related to the system is infrequent and of short duration. Personnel exposures due to operational and maintenance activities are discussed in Chapter 10. Chapter 10 also provides information concerning temporary shielding which may be utilized to reduce the personnel dose during loading, unloading, transfer, and handling operations. The estimated occupational doses for personnel comply with the requirements of 10CFR20.

For the loading and unloading of the HI-STORM overpack with the MPC, three transfer cask designs are provided (i.e., HI-TRAC 125, HI-TRAC 100, and HI-TRAC 125D). The two 125

ton HI-TRAC provide better shielding than the 100 ton HI-TRAC due to the increased shielding thickness and corresponding greater weight. Provided the licensee is capable of utilizing the 125 ton HI-TRAC, ALARA considerations would normally dictate that the 125 ton HI-TRAC should be used. However, sites may not be capable of utilizing the 125 ton HI-TRAC due to crane capacity limitations, floor loading limitations, or other site-specific considerations. As with other dose reduction-based plant activities,, individual users who cannot accommodate the 125 ton HI-TRAC should perform a cost-benefit analysis of the actions (e.g., plant modifications) that would be necessary to use the 125 ton HI-TRAC. The cost of the action(s) would be weighed against the value of the projected reduction in radiation exposure and a decision made based on each plant's particular ALARA implementation philosophy.

Dose rates at the restricted area and site boundaries shall be in accordance with applicable regulations. Licensees shall demonstrate compliance with 10CFR72.104 and 10CFR72.106 for the actual fuel being stored, the ISFSI storage array, and the controlled area boundary distances.

The analyses presented in Chapters 5, 10, and 11 demonstrate that the HI-STORM 100 System *is capable of* meet*ing*s the above radiation dose limits ~~and design objectives~~.

2.3.5.3 Radiological Alarm System

There are no credible events ~~which~~ *that* could result in release of radioactive materials or increases in direct radiation above the requirements of 10CFR72.106. ~~In addition, the non-mechanistic release as the result of a hypothetical accident is described in Chapter 7, and results in a dose to an individual at the controlled area boundary of a very small magnitude. Therefore, radiological alarm systems are not necessary.~~

2.3.6 Fire and Explosion Protection

There are no combustible or explosive materials associated with the HI-STORM 100 System. No such materials would be stored within an ISFSI. However, for conservatism we have analyzed a hypothetical fire accident as a bounding condition for HI-STORM 100. An evaluation of the HI-STORM 100 System in a fire accident is discussed in Chapter 11.

Small overpressures may result from accidents involving explosive materials which are stored or transported near the site. Explosion is an accident loading condition considered in Chapter 11.

Table 2.3.1

RADIOLOGICAL SITE BOUNDARY REQUIREMENTS

BOUNDARY OF CONTROLLED AREA (m) (minimum)	100
NORMAL AND OFF-NORMAL CONDITIONS:	
Whole Body (mrem/yr)	25
Thyroid (mrem/yr)	75
Any Other Critical Organ (mrem/yr)	25
DESIGN BASIS ACCIDENT:	
TEDE (rem)	5
DDE + CDE to any individual organ or tissue (other than lens of the eye) (rem)	50
Lens dose equivalent (rem)	15
Shallow dose equivalent to skin or any extremity (rem)	50

Table 2.3.2

Load Combinations† and Service Condition Definitions for the CTF Structure

Load Combination	Service Condition for Section III of the ASME Code for Definition of Allowable Stress	Comment
D*	Level A	All primary load bearing members must satisfy Level A stress limits.
D+S	Level A	
D+M††+W' D+F D+E or D+Y	Level D	Factor of safety against overturning shall be ≥ 1.1

† The reinforced concrete portion of the CTF structure shall also meet factored combinations of the above loads set forth in ACI-318(89).

†† This load may be reduced or eliminated based on a PRA for the CTF site.

2.4 DECOMMISSIONING CONSIDERATIONS

Efficient decommissioning of the ISFSI is a paramount objective of the HI-STORM 100 System. The HI-STORM 100 System is ideally configured to facilitate rapid, safe, and economical decommissioning of the storage site.

The MPC is being licensed for transport off-site in the HI-STAR 100 dual-purpose cask system (Reference Docket No. 71-9261). No further handling of the SNF stored in the MPC is required prior to transport to a licensed centralized storage facility or licensed repository.

The MPC which holds the SNF assemblies is engineered to be suitable as a waste package for permanent internment in a deep Mined Geological Disposal System (MGDS). The materials of construction permitted for the MPC are known to be highly resistant to severe environmental conditions. No carbon steel, paint, or coatings are used or permitted in the MPC. Therefore, the SNF assemblies stored in the MPC should not need to be removed. However, to ensure a practical, feasible method to defuel the MPC, the top of the MPC is equipped with sufficient gamma shielding and markings locating the drain and vent locations to enable semiautomatic (or remotely actuated) boring of the MPC lid to provide access to the MPC vent and drain. The circumferential welds of the MPC lid closure ring can be removed by semiautomatic or remotely actuated means, providing access to the SNF.

Likewise, the overpack consists of steel and concrete rendering it suitable for permanent burial. Alternatively, the MPC can be removed from the overpack, and the latter reused for storage of other MPCs.

In either case, the overpack would be expected to have no interior or exterior radioactive surface contamination. Any neutron activation of the steel and concrete is expected to be extremely small, and the assembly would qualify as Class A waste in a stable form based on definitions and requirements in 10CFR61.55. As such, the material would be suitable for burial in a near-surface disposal site as Low Specific Activity (LSA) material.

If the MPC needs to be opened and separated from the SNF before the fuel is placed into the MGDS, the MPC interior metal surfaces will be decontaminated using existing mechanical or chemical methods. This will be facilitated by the MPC fuel basket and interior structures' smooth metal surfaces designed to minimize crud traps. After the surface contamination is removed, the MPC radioactivity will be diminished significantly, allowing near-surface burial or secondary applications at the licensee's facility.

It is also likely that both the overpack and MPC, or extensive portions of both, can be further decontaminated to allow recycle or reuse options. After decontamination, the only radiological hazard the HI-STORM 100 System may pose is slight activation of the HI-STORM 100 materials caused by irradiation over a 40-year storage period.

Due to the design of the HI-STORM 100 System, no residual contamination is expected to be left behind on the concrete ISFSI pad. The base pad, fence, and peripheral utility structures will require no decontamination or special handling after the last overpack is removed.

To evaluate the effects on the MPC and HI-STORM overpack caused by irradiation over a 40-year storage period, the following analysis is provided. Table 2.4.1 provides the conservatively determined quantities of the major nuclides after 40 years of irradiation. The calculation of the material activation is based on the following:

- Beyond design basis fuel assemblies (B&W 15x15, ~~3.7~~*4.8*% enrichment, ~~47,500~~*70,000* MWD/MTU, and ~~eight~~*five*-year cooling time) stored for 40 years. *A constant source term for 40 years was used with no decrease in the neutron source term. This bounds the source term associated with the limiting PWR burnup of 68,200 MWD/MTU.*

- Material quantities based on the ~~Design D~~drawings in Section 1.5.

- A constant flux equal to the initial loading condition is conservatively assumed for the full 40 years.

- Material activation is based on MCNP-4A calculations.

As can be seen from the material activation results presented in Table 2.4.1, the MPC and HI-STORM overpack activation is very low, even including the very conservative assumption of a constant flux for 40 years. The results for the concrete in the HI-STORM overpack can be conservatively applied to the ISFSI pad. This is extremely conservative because the overpack shields most of the flux from the fuel and, therefore, the ISFSI pad will experience a minimal flux.

In any case, the HI-STORM 100 System would not impose any additional decommissioning requirements on the licensee of the ISFSI facility per 10CFR72.30, since the HI-STORM 100 System could eventually be shipped from the site.

Table 2.4.1
MPC ACTIVATION

Nuclide	Activity After 40-Year Storage (Ci/m^3)
^{54}Mn	2.20e-3
^{55}Fe	3.53e-3
^{59}Ni	2.91e-6
^{60}Co	3.11e-4
^{63}Ni	9.87e-5
Total	6.15e-3

HI-STORM OVERPACK ACTIVATION

Nuclide	Activity After 40-Year Storage (Ci/m^3)
Overpack Steel	
^{54}Mn	3.62e-4
^{55}Fe	7.18e-3
Total	7.18e-3
Overpack Concrete	
^{39}Ar	3.02e-6
^{41}Ca	2.44e-7
^{54}Mn	1.59e-7
^{55}Fe	2.95e-5
Total	3.43e-5

2.6 REFERENCES

[2.0.1] American Concrete Institute, "Building Code Requirements for Structural Concrete", ACI 318-95, ACI, Detroit, Michigan.

[2.0.2] American Concrete Institute, "Code Requirements for Nuclear Safety Related Concrete Structures", ACI 349-85, ACI, Detroit, Michigan†

[2.0.3] *Deleted.* ~~Levy, et al., "Recommended Temperature Limits for Dry Storage of Spent Light Water Reactor Zircaloy – Clad Fuel Rods in Inert Gas," Pacific Northwest Laboratory, PNL-6189, 1987~~.

[2.0.4] NRC Regulatory Guide 7.10, "Establishing Quality Assurance Programs for Packaging Used in the Transport of Radioactive Material," USNRC, Washington, D.C. Rev. 1 (1986).

[2.0.5] J.W. McConnell, A.L. Ayers, and M.J. Tyacke, "Classification of Transportation Packaging and Dry Spent Fuel Storage System Component According to Important to Safety," Idaho Engineering Laboratory, NUREG/CR-6407, INEL-95-0551, 1996.

[2.0.6] NUREG-1567, Standard Review Plan for Spent Fuel Dry Storage Facilities, March 2000

[2.0.7] ASME Code, Section III, Subsection NF and Appendix F, and Code Section II, Part D, Materials, 1995, with Addenda through 1997.

[2.0.8] "Cladding Considerations for the Transportation and Storage of Spent Fuel", Interim Staff Guidance-11, Revision 2, July 30, 2002.

[2.1.1] ORNL/TM-10902, "Physical Characteristics of GE BWR Fuel Assemblies", by R.S. Moore and K.J. Notz, Martin Marietta (1989).

[2.1.2] U.S. DOE SRC/CNEAF/96-01, Spent Nuclear Fuel Discharges from U.S. Reactors 1994, Feb. 1996.

[2.1.3] Deleted.

[2.1.4] Deleted.

† The 1997 edition of ACI-349 is specified for ISFSI pad and embedment design for deployment of the anchored HI-STORM 100A and HI-STORM 100SA.

[2.1.5] NUREG-1536, SRP for Dry Cask Storage Systems, USNRC, Washington, DC, January 1997.

[2.1.6] DOE Multi-Purpose Canister Subsystem Design Procurement. Specification.

[2.1.7] S.E. Turner, "Uncertainty Analysis - Axial Burnup Distribution Effects," presented in "Proceedings of a Workshop on the Use of Burnup Credit in Spent Fuel Transport Casks", SAND-89-0018, Sandia National Laboratory, Oct., 1989.

[2.1.8] Commonwealth Edison Company, Letter No. NFS-BND-95-083, Chicago, Illinois.

[2.2.1] ASME Boiler & Pressure Vessel Code, American Society of Mechanical Engineers, 1995 with Addenda through 1997.

[2.2.2] ASCE 7-88 (formerly ANSI A58.1), "Minimum Design Loads for Buildings and Other Structures", American Society of Civil Engineers, New York, NY, 1990.

[2.2.3] ANSI N14.6-1993, "Special Lifting Devices for Shipping Containers Weighing 10,000 Pounds (4500 Kg) or More", June 1993.

[2.2.4] Holtec Report HI-2012610, "Final Safety Analysis Report for the HI-STAR 100 Cask System", NRC Docket No. 72-1008, latest revision.

[2.2.5] Holtec Report HI-951251, "Safety Analysis Report for the HI-STAR 100 Cask System", NRC Docket No. 71-9261, latest revision.

[2.2.6] "Debris Collection System for Boiling Water Reactor Consolidation Equipment", EPRI Project 3100-02 and ESEERCO Project EP91-29, October 1995.

[2.2.7] Design Basis Tornado for Nuclear Power Plants, Regulatory Guide 1.76, U.S. Nuclear Regulatory Commission, April 1974.

[2.2.8] ANSI/ANS 57.9-1992, "Design Criteria for an Independent Spent Fuel Storage Installation (dry type)", American Nuclear Society, LaGrange Park, Illinois.

[2.2.9] NUREG-0800, SRP 3.5.1.4, USNRC, Washington, DC.

[2.2.10] United States Nuclear Regulatory Commission Regulatory Guide 1.59, "Design Basis Floods for Nuclear Power Plants", August 1973 and Rev. 1, April 1976.

[2.2.11] "Estimate of Tsunami Effect at Diablo Canyon Nuclear Generating Station, California." B.W. Wilson, PG&E (September 1985, Revision 1).

[2.2.12] Deleted.

[2.2.13] Cunningham et al., "Evaluation of Expected Behavior of LWR Stainless Clad Fuel in Long-Term Dry Storage", EPRI TR-106440, April 1996.

[2.2.14] M.W. Schwartz and M.C. Witte, Lawrence Livermore National Laboratory, "Spent Fuel Cladding Integrity During Dry Storage", UCID-21181, September 1987.

[2.2.15] PNL-4835, "Technical Basis for Storage of Zircaloy-Clad Spent Fuel in Inert Gases", A.B. Johnson and E.R. Gilbert, Pacific Northwest Laboratories, September 1983.

[2.2.16] Crane Manufacturer's Association of America (CMAA), Specification #70, 1988, Section 3.3.

Appendix 2.B The Forced Helium Dehydration (FHD) System

2.B.1 System Overview

The Forced Helium Dehydration (FHD) system is used to remove the remaining moisture in the MPC cavity after all of the water that can practically be removed through the drain line using a hydraulic pump *or an inert gas* has been expelled in the water blowdown operation. The FHD system is required to be used for *any* MPCs *containing all moderate burnup fuel if the heat load is greater than certain values (see Section 4.5) or if the MPC* contains ~~ing~~ at least one high burnup fuel assembly. *The FHD method of moisture removal* ~~and~~ is optional for MPCs containing all moderate burnup fuel assemblies.

Expelling the water from the MPC using a conventional pump *or a water displacement method using inert gas* would remove practically all of the contained water except for the small quantity remaining on the MPC baseplate below the bottom of the drain line and an even smaller adherent amount wetting the internal surfaces. A skid-mounted, closed loop dehydration system will be used to remove the residual water from the MPC such that the partial pressure of the trace quantity of water vapor in the MPC cavity gas is brought down to ≤ 3 torr. The FHD system, engineered for this purpose, shall utilize helium gas as the working substance.

The FHD system, schematically illustrated in Figure 2.B.1, can be viewed as an assemblage of four thermal modules, namely, (i) the condensing module, (ii) the demoisturizer module, (iii) the helium circulator module and (iv) the pre-heater module. The condensing module serves to cool the helium/vapor mixture exiting the MPC to a temperature well below its dew point such that water may be extracted from the helium stream. The condensing module is equipped with suitable instrumentation to provide a direct assessment of the extent of condensation that takes place in the module during the operation of the FHD system. The demoisturizer module, engineered to receive partially cooled helium exiting the condensing module, progressively chills the recirculating helium gas to a temperature that is well below the temperature corresponding to the partial pressure of water vapor at 3 torr.

The motive energy to circulate helium is provided by the helium circulator module, which is sized to provide the pressure rise necessary to circulate helium at the requisite rate. The last item, labeled the pre-heater module, serves to pre-heat the flowing helium to the desired temperature such that it is sufficiently warm to boil off any water present in the MPC cavity.

The pre-heater module, in essence, serves to add supplemental heat energy to the helium gas (in addition to the heat generated by the stored SNF in the MPC) so as to facilitate rapid conversion of water into vapor form. The heat input from the pre-heater module can be adjusted in the manner of a conventional electric heater so that the recirculating helium entering the MPC is sufficiently dry and hot to evaporate water, but not unduly hot to place unnecessary thermal burden on the condensing module.

The FHD system described in the foregoing performs its intended function by continuously removing water entrained in the MPC through successive cooling, moisture removal and reheating of the working substance in a closed loop. In a classical system of the FHD genre, the

moisture removal operation occurs in two discrete phases. In the beginning of the FHD system's operation (Phase 1), the helium exiting the MPC is laden with water vapor produced by boiling of the entrained bulk water. The condensing module serves as the principal device to condense out the water vapor from the helium stream in Phase 1. Phase 1 ends when all of the bulk water in the MPC cavity is vaporized. At this point, the operation of the FHD system moves on to steadily lowering the relative humidity and bulk temperature of the circulating helium gas (Phase 2). The demoisturizer module, equipped with the facility to chill flowing helium, plays the principal role in the dehydration process in Phase 2.

2.B.2 Design Criteria

The design criteria set forth below are intended to ensure that design and operation of the FHD system will drive the partial pressure of the residual vapor in the MPC cavity to ≤ 3 torr if the *gas*~~temperature of helium exiting the demoisturizer~~ has met the value and duration criteria provided in the HI-STORM technical specifications. The FHD system shall be designed to ensure that during normal operation (i.e., excluding startup and shutdown ramps) the following criteria are met:

i. The temperature of helium gas in the MPC shall be at least 15°F higher than the saturation temperature at coincident pressure.

ii. The pressure in the MPC cavity space shall be less than or equal to 60.3 psig (75 psia).

iii. The recirculation rate of helium shall be sufficiently high (minimum hourly throughput equal to ten times the nominal helium mass backfilled into the MPC for fuel storage operations) so as to produce a turbulated flow regime in the MPC cavity.

iv. The partial pressure of the water vapor in the MPC cavity will not exceed 3 torr. *The limit will be met* if the ~~helium~~*gas* temperature at the demoisturer outlet is *verified by measurement to remain* ≤ 21°F for ~~a period of~~ ≥ 30 minutes *or if the dew point of the gas exiting the MPC is verified by measurement to remain ≤ 22.9°F for ≥ 30 minutes.*

In addition to the above system design criteria, the individual modules shall be designed in accordance with the following criteria:

i. The condensing module shall be designed to de-vaporize the recirculating helium gas to a dew point of 120°F or less.

ii. The demoisturizer module shall be configured to be introduced into its helium conditioning function after the condensing module has been operated for the required length of time to assure that the bulk moisture vaporization in the MPC (defined as Phase 1 in Section 2.B.1) has been completed.

iii. The helium circulator shall be sized to effect the minimum flow rate of circulation required by the system design criteria described above.

iv. The pre-heater module shall be engineered to ensure that the temperature of the helium gas in the MPC meets the system design criteria described above.

2.B.3 Analysis Requirements

The design of the FHD system shall be subject to the confirmatory analyses listed below to ensure that the system will accomplish the performance objectives set forth in this FSAR.

i. System thermal analysis in Phase 1: Characterize the rate of condensation in the condensing module and helium temperature variation under Phase 1 operation (i.e., the scenario where there is some unevaporated water in the MPC) using a classical thermal-hydraulic model wherein the incoming helium is assumed to fully mix with the moist helium inside the MPC.

ii. System thermal analysis in Phase 2: Characterize the thermal performance of the closed loop system in Phase 2 (no unvaporized moisture in the MPC) to predict the rate of condensation and temperature of the helium gas exiting the condensing and the demoisturizer modules. Establish that the system design is capable to ensure that partial pressure of water vapor in the MPC will reach ≤ 3 torr if the temperature of the helium gas exiting the demoisturizer is predicted to be at a maximum of 21°F for 30 minutes.

iii. Fuel Cladding Temperature Analysis: A steady-state thermal analysis of the MPC under the forced helium flow scenario shall be performed using the methodology described in HI-STORM 100 FSAR Subsections 4.4.1.1.1 through 4.4.1.1.4 with due recognition of the forced convection process during FHD system operation. This analysis shall demonstrate that the peak temperature of the fuel cladding under the most adverse condition of FHD system operation (design maximum heat load, no moisture, and maximum helium inlet temperature), is below the peak cladding temperature limit for normal conditions of storage for the applicable fuel type (PWR or BWR) and cooling time at the start of dry storage.

2.B.4 Acceptance Testing

The first FHD system designed and built for the MPC drying function required by HI-STORM's technical specifications shall be subject to confirmatory testing as follows:

a. A representative quantity of water shall be placed in a manufactured MPC (or equivalent mock-up) and the closure lid and RVOAs installed and secured to create a hermetically sealed container.

b. The MPC cavity drying test shall be conducted for the worst case scenario (no heat generation within the MPC available to vaporize water).

c. The drain and vent line RVOAs on the MPC lid shall be connected to the terminals located in the pre-heater and condensing modules of the FHD system, respectively.

d. The FHD system shall be operated through the moisture vaporization (Phase 1) and subsequent dehydration (Phase 2). The FHD system operation will be stopped after the temperature of helium exiting the demoisturizer module has been at or below 21°F for thirty minutes (nominal). Thereafter, a sample of the helium gas from the MPC will be extracted and tested to determine the partial pressure of the residual water vapor in it. The FHD system will be deemed to have passed the acceptance testing if the partial pressure in the extracted helium sample is less than or equal to 3 torr.

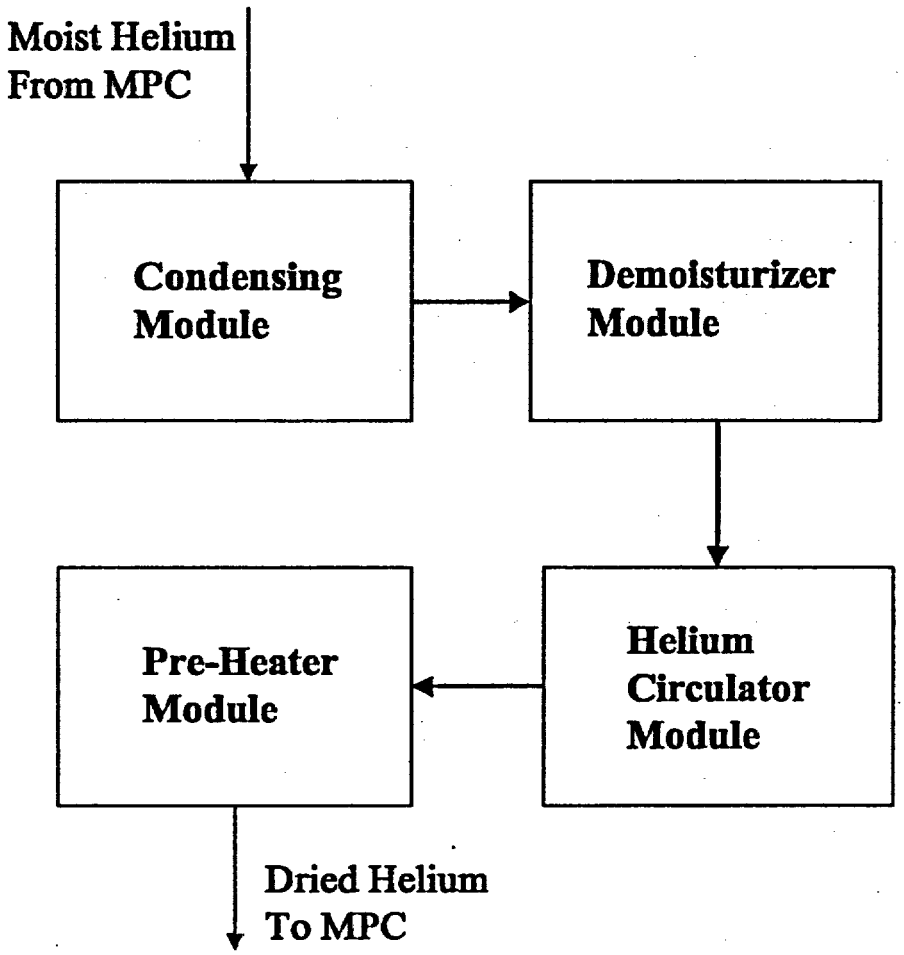

FIGURE 2.B.1: SCHEMATIC OF THE FORCED HELIUM DEHYDRATION SYSTEM

CHAPTER 3: STRUCTURAL EVALUATION†

In this chapter, the structural components of the HI-STORM 100 System that are important to safety (ITS) are identified and described. The objective of the structural analyses is to ensure that the integrity of the HI-STORM 100 System is maintained under all credible loads for normal, off-normal, and design basis accident/natural phenomena. The chapter results support the conclusion that the confinement, criticality control, radiation shielding, and retrievability criteria set forth by 10CFR72.236(l), 10CFR72.124(a), 10CFR72.104, 10CFR72.106, and 10CFR72.122(l) are met. In particular, the design basis information contained in the previous two chapters and in this chapter provides sufficient data to permit structural evaluations to demonstrate compliance with the requirements of 10CFR72.24. To facilitate regulatory review, the assumptions and conservatism's inherent in the analyses are identified along with a complete description of the analytical methods, models, and acceptance criteria. A summary of other material considerations, such as corrosion and material fracture toughness is also provided. Design calculations for the HI-TRAC transfer cask are included where appropriate to comply with the guidelines of NUREG-1536.

~~Detailed numerical computations supporting the conclusions in the main body of this chapter are presented in a series of appendices. Where appropriate, the subsections make reference to results in the appendices. Section 3.6.3 contains the complete list of appendices that support this chapter.~~

This revision to the HI-STORM Safety Analysis Report, the first since the HI-STORM 100 System was issued a Part 72 Certificate-of-Compliance, incorporates several features into the structural analysis to respond to the changing needs of the U.S. nuclear power generation industry. The most significant changes to this chapter for this revision are:

- The incorporation of structural results associated with the MPC-32 and the MPC-24E/24EF fuel baskets. In the case of the MPC-32, this revision simply returns results of analyses that were contained in this chapter prior to the initial CoC. In the case of the 24E basket, the new results are based on the same structural analysis model used for all the other baskets evaluated.

- The revision of the analyses of free thermal expansion and MPC canister shell to incorporate the changed temperature distribution from the inclusion of the thermosiphon effect (convective heat transfer inside the canister).

- The introduction of new analyses that permit the use of additional damaged fuel canisters in the HI-STORM 100.

† This chapter has been prepared in the format and section organization set forth in Regulatory Guide 3.61. However, the material content of this chapter also fulfills the requirements of NUREG-1536. Pagination and numbering of sections, figures, and tables are consistent with the convention set down in Chapter 1, Section 1.0, herein. Finally, all terms-of-art used in this chapter are consistent with the terminology of the glossary (Table 1.0.1) and component nomenclature of the Bill-of-Materials (Section 1.5).

- The inclusion of a short version of the HI-STORM overpack (designated as HI-STORM 100S) to accommodate plants with reduced clearances. In general, we show that the HI-STORM 100S is bounded by results previously obtained.

- Revisions to approved HI-TRAC analyses to accommodate fabrication enhancements.

- Enhancement of the handling accident and tipover analyses to provide an additional qualified reference ISFSI pad configuration with higher strength concrete.

- Introduction of an anchored HI-STORM (designated as HI-STORM 100A). This enhancement permits use of a HI-STORM at sites in high seismic zones where a free standing cask is not acceptable.

The organization of technical information in this chapter follows the format and content guidelines of USNRC Regulatory Guide 3.61 (February 1989). The FSAR ensures that the responses to the review requirements listed in NUREG-1536 (January 1997) are complete and comprehensive. The areas of NRC staff technical inquiries, with respect to structural evaluation in NUREG-1536, span a wide array of technical topics within and beyond the material in this chapter. To facilitate the staff's review to ascertain compliance with the stipulations of NUREG-1536, Table 3.0.1 "Matrix of NUREG-1536 Compliance - Structural Evaluation", is included in this chapter. A comprehensive cross-reference of the topical areas set forth in NUREG-1536, and the location of the required compliance information is contained in Table 3.0.1.

Section 3.7 describes in detail HI-STORM 100 System's compliance to NUREG-1536 Structural Evaluation Requirements.

The HI-STORM 100 System matrix of compliance table given in this section is developed with the supposition that the storage overpack is designated as a steel structure that falls within the purview of subsection 3.V.3 "Other Systems Components Important to Safety" (page 3-28 of NUREG-1536), and therefore, does not compel the use of reinforced concrete. (Please refer to Table 1.0.3 for an explicit statement of exception on this matter). The concrete mass installed in the HI-STORM 100 overpack is accordingly equipped with "plain concrete" for which the sole applicable industry code is ACI 318.1 (92). Plain concrete, in contrast to reinforced concrete, is the preferred shielding material HI-STORM 100 because of three key considerations:

(i) Plain concrete is more amenable to a void free pour than reinforced concrete in narrow annular spaces typical of ventilated vertical storage casks.

(ii) The tensile strength bearing capacity of reinforced concrete is not required to buttress the steel weldment of the HI-STORM 100 overpack.

(iii) The compression and bearing strength capacity of plain concrete is unaffected by the absence of rebars. A penalty factor, on the compression strength, pursuant to the provisions of ACI-318.1 is, nevertheless, applied to insure conservatism. However, while plain concrete is the chosen shielding embodiment for the HI-STORM 100 storage overpack, all necessary technical, procedural Q.C., and Q.A. provisions to insure nuclear grade quality will be implemented by utilizing the relevant sections from ACI-349 (85) as specified in Appendix 1.D.

In other words, guidelines of NUREG 1536 pertaining to reinforced concrete are considered to insure that the material specification, construction quality control and quality assurance of the shielding concrete comply with the provisions of ACI 349 (85). These specific compliance items are listed in the compliance matrix.

TABLE 3.0.1
MATRIX OF NUREG-1536 COMPLIANCE ITEMS – STRUCTURAL EVALUATION †

PARAGRAPH IN NUREG-1536	NUREG-1536 COMPLIANCE ITEM	LOCATION IN FSAR CHAPTER 3	LOCATION OUTSIDE OF FSAR CHAPTER 3
IV.1.a	ASME B&PV Compliance		
	NB	3.1.1	Tables 2.2.6,2.2.7
	NG	3.1.1	Tables 2.2.6,2.2.7
IV.2	Concrete Material Specification		Appendix 1.D
IV.4	Lifting Devices	3.1; 3.4~~;3.D;3.E;3.AC~~	
V.	Identification of SSC that are ITS		Table 2.2.6
"	Applicable Codes/Standards	3.6.1	Table 2.2.6
"	Loads		Table 2.2.13
"	Load Combinations	3.1.2.1.2; Tables 3.1.1-3.1.5	Table 2.2.14
"	Summary of Safety Factors	3.4.3; 3.4.4.2; 3.4.4.3.1-3 3.4.6-3.4.9; Tables 3.4.3-3.4.9	
"	Design/Analysis Procedures	Chapter 3~~ plus Appendices~~	
"	Structural Acceptance Criteria		Tables 2.2.10-2.2.12

TABLE 3.0.1 (CONTINUED)
MATRIX OF NUREG-1536 COMPLIANCE ITEMS – STRUCTURAL EVALUATION †

PARAGRAPH IN NUREG-1536	NUREG-1536 COMPLIANCE ITEM	LOCATION IN FSAR CHAPTER 3	LOCATION OUTSIDE OF FSAR CHAPTER 3
"	Material/QC/Fabrication	Table 3.4.2	Chap. 9; Chap. 13
"	Testing/In-Service Surveillance		Chap. 9; Chap. 12
"	Conditions for Use		Table 1.2.6; Chaps. 8,9,12
V.1.a	Description of SSC	3.1.1	1.2
V.1.b.i.(2)	Identification of Codes & Standards		Tables 2.2.6, 2.2.7
V.1.b.ii	Drawings/Figures		1.5
"	Identification of Confinement Boundary		1.5; 2.3.2; 7.1; Table 7.1.1
"	Boundary Weld Specifications	3.3.1.4	1.5; Table 7.1.2
"	Boundary Bolt Torque	NA	
"	Weights and C.G. Location	Tables 3.2.1-3.2.4	
"	Chemical/Galvanic Reactions	3.4.1; Table 3.4.2	
V.1.c	Material Properties	3.3; Tables 3.3.1-3.3.5	1.A; 1.C; 1.D
"	Allowable Strengths	Tables 3.1.6-3.1.17	Tables 2.2.10-2.2.12; 1.D
"	Suitability of Materials	3.3; Table 3.4.2	1.A; 1.B; 1.D
"	Corrosion	3.3	
"	Material Examination before Fabrication		9.1.1

TABLE 3.0.1 (CONTINUED)
MATRIX OF NUREG-1536 COMPLIANCE ITEMS – STRUCTURAL EVALUATION †

PARAGRAPH IN NUREG-1536	NUREG-1536 COMPLIANCE ITEM	LOCATION IN FSAR CHAPTER 3	LOCATION OUTSIDE OF FSAR CHAPTER 3
"	Material Testing and Analysis		9.1; Table 9.1.1;1.D
"	Material Traceability		9.1.1
"	Material Long Term Performance	3.3; 3.4.11; 3.4.12	9.2
"	Materials Appropriate to Load Conditions		Chap. 1
"	Restrictions on Use		Chap. 12
"	Temperature Limits	Table 3.1.17	Table 2.2.3
"	Creep/Slump	3.4.4.3.3.2~~; 3.F~~	
"	Brittle Fracture Considerations	3.1.2.3; Table 3.1.18	
"	Low Temperature Handling		2.2.1.2
V.1.d.i.(1)	Normal Load Conditions		2.2.1; Tables 2.2.13,2.2.14
"	Fatigue	3.1.2.4	
"	Internal Pressures/Temperatures for Hot and Cold Conditions	3.4.4.1	2.2.2; Tables 2.2.1,2.2.3
"	Required Evaluations		
"	Weight+Pressure	3.4.4.3.1.2	
"	Weight/Pressure/Temp.	3.4.4.3.1.2	
"	Free Thermal Expansion	3.4.4.2~~; 3.U; 3.V; 3.W; 3.I;3.AF; 3.AQ~~	*4.4.5; Figure 4.4.30*~~Tables 4.4.15, 4.5.4~~

TABLE 3.0.1 (CONTINUED)
MATRIX OF NUREG-1536 COMPLIANCE ITEMS – STRUCTURAL EVALUATION †

PARAGRAPH IN NUREG-1536	NUREG-1536 COMPLIANCE ITEM	LOCATION IN FSAR CHAPTER 3	LOCATION OUTSIDE OF FSAR CHAPTER 3
V.1.d.i.(2)	Off-Normal Conditions		2.2.2; Tables 2.2.13, 2.2.14; 11.1
V.1.d.i.(3)	Accident Level Events and Conditions	Tables 3.1.1, 3.1.2	2.2.3; Tables 2.2.13, 2.2.14; 11.2
V.1.d.i.(3).(a)	Storage Cask Vertical Drop	3.1.2.1.1.2; 3.4.10; 3.A	2.2.3.1
"	Storage Cask Tipover	3.1.2.1.1.1; 3.4.10; 3.A	2.2.3.2
"	Transfer Cask Horizontal Drop	3.4.9~~; 3.Z; 3.AL; 3.AN~~	2.2.3.1
V.1.d.i.(3).(b)	Explosive Overpressure	3.1.2.1.1.4~~;3AK~~	2.2.3.10
V.1.d.i.(3).(c)	Fire		
"	Structural Evaluations	3.4.4.2	2.2.3.3
"	Material Properties		11.2
"	Material Suitability	3.1.2.2; 3.3.1.1	Table 2.2.3;11.2
V.1.d.i.(3).(d)	Flood		
"	Identification	3.1.2.1.1.3; 3.4.6	2.2.3.6
"	Cask Tipover	3.4.6	
"	Cask Sliding	3.4.6	
"	Hydrostatic Loading	3.1.2.1.1.3; 3.4.6	72-1008(3.H)
"	Consequences		11.2
V.1.d.i.(3).(e)	Tornado Winds		
"	Specification	3.1.2.1.1.5	2.2.3.5; Table 2.2.4
"	Drag Coefficients	3.4.8~~; 3.C~~	
"	Load Combination	3.4.8~~; 3.C~~	

TABLE 3.0.1 (CONTINUED)
MATRIX OF NUREG-1536 COMPLIANCE ITEMS – STRUCTURAL EVALUATION †

PARAGRAPH IN NUREG-1536	NUREG-1536 COMPLIANCE ITEM	LOCATION IN FSAR CHAPTER 3	LOCATION OUTSIDE OF FSAR CHAPTER 3
"	Overturning –Transfer	NA	
V.1.d.i.(3).(f)	Tornado Missiles		
"	Missile Parameters	3.1.2.1.1.5	Table 2.2.5
"	Tipover	3.4.8~~; 3.C~~	
"	Damage	*3.4.8.1; 3.4.8.2*~~3.B; 3.G; 3.H; 3Z; 3.AM~~	
"	Consequences	3.4.8.1; 3.4.8.2	11.2
V.1.d.i.(3).(g)	Earthquakes		
"	Definition of DBE	3.1.2.1.1.6; 3.4.7	2.2.3.7; Table 2.2.8
"	Sliding	3.4.7	
"	Overturning	3.4.7	
"	Structural Evaluations	3.4.7~~; 3B~~	11.2
V.1.d.i.(4).(a)	Lifting Analyses		
"	Trunnions		
"	Requirements	3.1.2.1.2; 3.4.3.1;3.4.3.2	72-1008(3.4.3);2.2.1.2
"	Analyses	3.4.3.1; 3.4.3.2~~; 3.D;3.E; 3.AC; 3.AE~~	72-1008(3.4.3)
"	Other Lift Analyses	3.4.3.7-3.4.3.9~~; 3.D; 3.AB; 3.AC; 3.AE; 3.AD; 3.AI; 3.AJ~~	
V.1.d.i.(4).(b)	Fuel Basket		
"	Requirements	3.1.2.1.2; Table 3.1.3	
"	Specific Analyses	3.4.4.2; 3.4.4.3; 3.6.3~~; 3.U; 3.W; 3.I; 3.Y~~	72-1008(3.4.4.3.1.2; 3.4.4.3.1.6~~; 3.AA~~; 3.M; 3.H; 3.I)

TABLE 3.0.1 (CONTINUED)
MATRIX OF NUREG-1536 COMPLIANCE ITEMS – STRUCTURAL EVALUATION †

PARAGRAPH IN NUREG-1536	NUREG-1536 COMPLIANCE ITEM	LOCATION IN FSAR CHAPTER 3	LOCATION OUTSIDE OF FSAR CHAPTER 3
"	Dynamic Amplifiers	*3.4.4.4.1~~3.X~~*	
"	Stability	3.4.4.3; 3.4.4.4~~; 3.AK~~	72-1008(Figures 3.4.27-32)
V.1.d.i.(4).(c)	Confinement Closure Lid Bolts		
"	Pre-Torque	NA	
"	Analyses	NA	
"	Engagement Length	NA	
"	Miscellaneous Bolting		
"	Pre-Torque	*3.4.3.7; 3.4.3.8~~3.AG~~*	
"	Analyses	*3.4.4.3.2.2~~3.L~~*	
"	Engagement Length	*3.4.3.5; 3.4.3.7; 3.4.3.8~~3.AC; 3.D~~*	
V.1.d.i.(4)	Confinement		
"	Requirements	3.1.2.1.2; Table 3.1.4	Chap. 7
"	Specific Analyses	3.6.3; Tables 3.4.3, 3.4.4~~; 3.D;~~	72-1008(3.E; 3.K; 3.I; ~~3.AA~~ 3.4.4.3.1.5)
"	Dynamic Amplifiers	~~3.X;~~ 3.4.4.1	
"	Stability	3.4.4.3.1	72-1008(3.H)
"	Overpack		
"	Requirements	3.1.2.1.2; Tables 3.1.1, 3.1.5	
"	Specific Analyses	3.6.3; ~~3.B; 3.D; 3.L; 3.M; 3.AC; 3.D;~~3.4.4.3~~; 3.K; 3.AK; 3.AR; 3.AS~~	

TABLE 3.0.1 (CONTINUED)
MATRIX OF NUREG-1536 COMPLIANCE ITEMS – STRUCTURAL EVALUATION †

PARAGRAPH IN NUREG-1536	NUREG-1536 COMPLIANCE ITEM	LOCATION IN FSAR CHAPTER 3	LOCATION OUTSIDE OF FSAR CHAPTER 3
"	Dynamic Amplifiers	3.4.4.3.2~~; 3.X~~	
"	Stability	3.4.4.3; Table 3.1.1; 3.4.4.5~~; 3.AK~~	
"	Transfer Cask		
"	Requirements	3.1.2.1.2; Table 3.1.5	
"	Specific Analyses	3.4.4.3; 3.6.3~~; 3.E; 3.H; 3.I; 3.Z; 3.AD; 3.AE; 3.AA; 3.AI; 3.AB; 3.AD; 3.AG; 3.F; 3.AH; 3.AJ; 3.AL; 3.AM~~	
"	Dynamic Amplifiers	*3.4.4.4.1*~~*3.X*~~	
"	Stability	NA	2.2.3.1

† Legend for Table 3.0.1

Per the nomenclature defined in Chapter 1, the first digit refers to the chapter number, the second digit is the section number within the chapter; an alphabetic character in the second place means it is an appendix to the chapter.

72-1008 HI-STAR 100 Docket Number where the referenced item is located
NA Not Applicable for this item

~~Appendices 3.N-3.T have been relocated to the Calculation Package, HI-2002481 as of this revision.~~

3.1 STRUCTURAL DESIGN

3.1.1 Discussion

The HI-STORM 100 System consists of three principal components: the Multi-Purpose Canister (MPC), the storage overpack, and the transfer cask. The MPC is a hermetically sealed, welded structure of cylindrical profile with flat ends and a honeycomb fuel basket. A complete description is provided in Subsection 1.2.1.1 wherein the anatomy of the MPC and its fabrication details are presented with the aid of figures. The MPCs utilized in the HI-STORM 100 System are identical to those for the HI-STAR 100 System submitted under Dockets 72-1008 and 71-9261. The evaluation of the MPCs presented herein draws upon the work described in those earlier submittals. In this section, the discussion is confined to characterizing and establishing the structural features of the MPC, the storage overpack, and the HI-TRAC transfer cask. Since a detailed discussion of the HI-STORM 100 Overpack and HI-TRAC transfer cask geometries is presented in Section 1.2, attention is focused here on structural capabilities and their inherent margins of safety for housing the MPC. Detailed design drawings for the HI-STORM 100 System are provided in Section 1.5.

The design of the MPC seeks to attain three objectives that are central to its functional adequacy, namely:

- Ability to Dissipate Heat: The thermal energy produced by the stored spent fuel must be transported to the outside surface of the MPC such that the prescribed temperature limits for the fuel cladding and for the fuel basket metal walls are not exceeded.

- Ability to Withstand Large Impact Loads: The MPC, with its payload of nuclear fuel, must be sufficiently robust to withstand large impact loads associated with the postulated handling accident events. Furthermore, the strength of the MPC must be sufficiently isotropic to meet structural requirements under a variety of handling and tip-over accidents.

- Restraint of Free End Expansion: The membrane and bending stresses produced by restraint of free-end expansion of the fuel basket are categorized as primary stresses. In view of the concentration of heat generation in the fuel basket, it is necessary to ensure that structural constraints to its external expansion do not exist.

Where the first two criteria call for extensive inter-cell connections, the last criterion requires the opposite. The design of the MPC seeks to realize all of the above three criteria in an optimal manner.

From the description presented in Chapter 1, the MPC enclosure vessel is the confinement vessel designed to meet ASME Code, Section III, Subsection NB stress limits. The enveloping canister shell, the baseplate, and the lid system form a complete confinement boundary for the stored fuel that is referred to as the "enclosure vessel". Within this cylindrical shell confinement vessel is an integrally welded assemblage of cells of square cross sectional openings for fuel storage, referred to herein as the fuel basket. The fuel basket is analyzed under the provisions of Subsection NG of Section III of the ASME Code. All multi-purpose canisters designed for deployment in the HI-STORM 100 and HI-STAR 100 systems are exactly alike in their external dimensions. The essential

difference between the MPCs lies in the fuel baskets. Each fuel storage MPC is designed to house fuel assemblies with different characteristics. Although all fuel baskets are configured to maximize structural ruggedness through extensive inter-cell connectivity, they are sufficiently dissimilar in structural details to warrant separate evaluations. Therefore, analyses for each of the MPC types were carried out to ensure structural compliance. Inasmuch as no new MPC designs are introduced in this application, and all MPC designs were previously reviewed by the USNRC under Docket 72-1008, the MPC analyses submitted under Docket Numbers 72-1008 and 71-9261 for the HI-STAR 100 System are not reproduced herein unless they need to be modified by HI-STORM 100 conditions or geometry differences. Analyses provided in the HI-STAR 100 System safety analysis reports that are applicable to the HI-STORM 100 System are referenced in this FSAR by docket number and subsection or appendix.

Components of the HI-STORM 100 System that are important to safety and their applicable design codes are defined in Chapter 2.

Some of the key structural functions of the MPC in the storage mode are:

1. To position the fuel in a subcritical configuration, and

2. To provide a confinement boundary.

Some of the key structural functions of the overpack in the storage mode are:

1. To serve as a missile barrier for the MPC,

2. To provide flow paths for natural convection,

3. To ensure stability of the HI-STORM 100 System, and

4. To maintain the position of the radiation shielding.

5. To allow movement of the overpack with a loaded MPC inside.

Some structural features of the MPCs that allow the system to perform these functions are summarized below:

- There are no gasketed ports or openings in the MPC. The MPC does not rely on any sealing arrangement except welding. The absence of any gasketed or flanged joints makes the MPC structure immune from joint leaks. The confinement boundary contains no valves or other pressure relief devices.

- The closure system for the MPCs consists of two components, namely, the MPC lid and the closure ring. The MPC lid can be either a single thick circular plate continuously welded to the MPC shell along its circumference or two dual lids welded around their common periphery. The MPC closure system is shown in the Design Drawings in Section 1.5. The MPC lid is equipped with vent and drain ports which are utilized for evacuating moisture and air from the MPC following fuel loading, and subsequent backfilling with an inert gas (helium) at a specified mass. The vent and drain ports are covered by a cover plate and welded before the closure ring is installed. The closure ring is a circular annular plate edge-welded to the MPC lid and shell. The two closure members are interconnected by welding around the inner diameter of the ring. Lift points for the MPC are provided in the MPC lid.

- The MPC fuel baskets consist of an array of interconnecting plates. The number of storage cells formed by this interconnection process varies depending on the type of fuel being stored. Basket designs containing cell configurations for PWR and BWR fuel have been designed and are explained in detail in Section 1.2. All baskets are designed to fit into the same MPC shell. Welding of the basket plates along their edges essentially renders the fuel basket into a multiflange beam. Figure 3.1.1 provides an isometric illustration of a fuel basket for the MPC-68 design.

- The MPC basket is separated from its supports by a gap. The gap size decreases as a result of thermal expansion (depending on the magnitude of internal heat generation from the stored spent fuel). The provision of a small gap between the basket and the basket support structure is consistent with the natural thermal characteristics of the MPC. The planar temperature distribution across the basket, as shown in Section 4.4, approximates a shallow parabolic profile. This profile will create high thermal stresses unless structural constraints at the interface between the basket and the basket support structure are removed.

- The MPCs will be loaded with fuel with widely varying heat generation rates. The basket/basket support structure gap tends to be reduced for higher heat generation rates due to increased thermal expansion rates. Gaps between the fuel basket and the basket support structure are specified to be sufficiently large such that a gap exists around the periphery after any thermal expansion.

- A small number of flexible thermal conduction elements (thin aluminum tubes) are interposed between the basket and the MPC shell. The elements are designed to be resilient. They do not provide structural support for the basket, and thus their resistance to thermal growth is negligible.

It is quite evident from the geometry of the MPC that a critical loading event pertains to the drop condition when the MPC is postulated to undergo a handling side drop (the longitudinal axis of the MPC is horizontal) or tip-over. Under the side drop or tip-over condition the flat panels of the fuel basket are subject to an equivalent pressure loading that simulates the deceleration-magnified inertia load from the stored fuel and the MPC's own metal mass.

The MPC fuel basket maintains the spent nuclear fuel in a subcritical arrangement. Its safe operation is assured by maintaining the physical configuration of the storage cell cavities intact in the aftermath of a drop event. This requirement is considered to be satisfied if the MPC fuel basket meets the stress intensity criteria set forth in the ASME Code, Section III, Subsection NG. Therefore, the demonstration that the fuel basket meets Subsection NG limits ensures that there is no impairment of ready retrievability (as required by NUREG-1536), and that there is no unacceptable effect on the subcritical arrangement.

The MPC confinement boundary contains no valves or other pressure relief devices. The MPC enclosure vessel is shown to meet the stress intensity criteria of the ASME Code, Section III, Subsection NB for all service conditions. Therefore, the demonstration that the enclosure vessel meets Subsection NB limits ensures that there is no unacceptable release of radioactive materials.

The HI-STORM 100 storage overpack is a steel cylindrical structure consisting of inner and outer low carbon steel shells, a lid, and a baseplate. Between the two shells is a thick cylinder of un-reinforced (plain) concrete. Additional regions of fully confined (by enveloping steel structure) unreinforced concrete are attached to the lid and to the baseplate. The storage overpack serves as a missile and radiation barrier, provides flow paths for natural convection, provides kinematic stability to the system, and acts as a cushion for the MPC in the event of a tip-over accident. The storage overpack is not a pressure vessel since it contains cooling vents that do not allow for a differential pressure to develop across the overpack wall. The structural steel components of the HI-STORM 100 Overpack are designed to meet the stress limits of the ASME Code, Section III, Subsection NF, Class 3. A short version of the HI-STORM 100 overpack, designated as the HI-STORM 100S, is introduced in this revision. To accommodate nuclear plants with limited height access, the HI-STORM 100S has a re-configured lid and a lower overall height. There are minor weight redistributions but the overall bounding weight of the system is unchanged. Therefore, structural analyses are revisited if and only if the modified configuration cannot be demonstrated to be bounded by the original calculation. New or modified calculations focused on the HI-STORM 100 are clearly identified within the text of this chapter. Unless otherwise designated, general statements using the terminology "HI-STORM 100" also apply to the HI-STORM 100S. The HI-STORM 100S can carry all MPC's and transfer casks that can be carried in the HI-STORM 100.

As discussed in Chapters 1 and 2, and Section 3.0, the principal shielding material utilized in the HI-STORM 100 Overpack is plain concrete. Plain concrete was selected for the HI-STORM 100 Overpack in lieu of reinforced concrete, because there is no structural imperative for incorporating tensile load bearing strength into the contained concrete. From a purely practical standpoint, the absence of rebars facilitate pouring and curing of concrete with minimal voids, which is an important consideration in light of its shielding function in the HI-STORM 100 Overpack. Plain concrete, however, acts essentially identical to reinforced concrete under compressive and bearing loads, even

though ACI standards apply a penalty factor on the compressive and bearing strength of concrete in the absence of rebars (vide ACI 318.1).

Accordingly, the plain concrete in the HI-STORM 100 is considered as a structural material only to the extent that it may participate in supporting direct compressive loads. The allowable compression/bearing resistance is defined and quantified in the ACI 318.1(92) Building Code for Structural Plain Concrete.

In general, strength analysis of the HI-STORM 100 Overpack and its confined concrete is carried out only to demonstrate that the concrete is able to perform its radiation protection function and that retrievability of the MPC subsequent to any postulated accident condition of storage or handling is maintained.

A discrete ITS component in the HI-STORM 100 System is the HI-TRAC transfer cask. The HI-TRAC serves to provide a missile and radiation barrier during transport of the MPC from the fuel pool to the HI-STORM 100 Overpack. The HI-TRAC body is a double-walled steel cylinder that constitutes its structural system. Contained between the two steel shells is an intermediate lead cylinder. Attached to the exterior of the HI-TRAC body outer shell is a water jacket that acts as a radiation barrier. The HI-TRAC is not a pressure vessel since it contains a penetration in the HI-TRAC top lid that does not allow for a differential pressure to develop across the HI-TRAC wall. Nevertheless, in the interest of conservatism, structural steel components of the HI-TRAC are subject to the stress limits of the ASME Code, Section III, Subsection NF, Class 3.

Since both the HI-STORM 100 and HI-TRAC may serve as an MPC carrier, their lifting attachments are designed to meet the design safety factor requirements of NUREG-0612 [3.1.1] and ANSI N14.6-1993 [3.1.2] for single-failure-proof lifting equipment.

Table 2.2.6 provides a listing of the applicable design codes for all structures, systems, and components which are designated as ITS.

3.1.2 Design Criteria

Principal design criteria for normal, off-normal, and accident/environmental events are discussed in Section 2.2. In this section, the loads, load combinations, and allowable stresses used in the structural evaluation of the HI-STORM 100 System are presented in more detail.

Consistent with the provisions of NUREG-1536, the central objective of the structural analysis presented in this chapter is to ensure that the HI-STORM 100 System possesses sufficient structural capability to withstand normal and off-normal loads and the worst case loads under natural phenomenon or accident events. Withstanding such loadings enables the HI-STORM 100 System to successfully preclude the following negative consequences:

- unacceptable risk of criticality
- unacceptable release of radioactive materials
- unacceptable radiation levels
- impairment of ready retrievability of the SNF

The above design objectives for the HI-STORM 100 System can be particularized for individual components as follows:

- The objectives of the structural analysis of the MPC are to demonstrate that:

  1. Confinement of radioactive material is maintained under normal, off-normal, accident conditions, and natural phenomenon events.

  2. The MPC basket does not deform under credible loading conditions such that the subcriticality or retrievability of the SNF is jeopardized.

- The objectives of the structural analysis of the storage overpack are to demonstrate that:

  1. Tornado-generated missiles do not compromise the integrity of the MPC confinement boundary.

  2. The overpack can safely provide for on-site transfer of the loaded MPC and ensure adequate support to the HI-TRAC transfer cask during loading and unloading of the MPC.

  3. The radiation shielding remains properly positioned in the case of any normal, off-normal, or natural phenomenon or accident event.

  4. The flow path for the cooling air flow shall remain available under normal and off-normal conditions of storage and after a natural phenomenon or accident event.

  ~~9.~~5. The loads arising from normal, off-normal, and accident level conditions exerted on the contained MPC do not exceed the structural design criteria of the MPC.

  6. No geometry changes occur under any normal, off-normal, and accident level conditions of storage that may preclude ready retrievability of the contained MPC.

7. A freestanding storage overpack can safely withstand a non-mechanistic tip-over event with a loaded MPC within the overpack. The HI-STORM 100A is specifically engineered to be permanently attached to the ISFSI pad. The ISFSI pad engineered for the anchored cask is designated as "Important to Safety". Therefore, the non-mechanistic tipover is not applicable to the HI-STORM 100A.

8. The inter-cask transfer of a loaded MPC can be carried out without exceeding the structural capacity of the HI-STORM 100 Overpack, provided all required auxiliary equipment and components specific to an ISFSI site comply with their Design Criteria set forth in this FSAR and the handling operations are in full compliance with operational limits and controls prescribed in this FSAR.

- The objective of the structural analysis of the HI-TRAC transfer cask is to demonstrate that:

  1. Tornado generated missiles do not compromise the integrity of the MPC confinement boundary while the MPC is contained within HI-TRAC.

  2. No geometry changes occur under any postulated handling or storage conditions that may preclude ready retrievability of the contained MPC.

  3. The structural components perform their intended function during lifting and handling with the loaded MPC.

  4. The radiation shielding remains properly positioned under all applicable handling service conditions for HI-TRAC.

  5. The lead shielding, top lid, and transfer lid doors remain properly positioned during postulated handling accidents.

The aforementioned objectives are deemed to be satisfied for the MPC, the overpack, and the HI-TRAC, if stresses (or stress intensities, as applicable) calculated by the appropriate structural analyses are less than the allowables defined in Subsection 3.1.2.2, and if the diametral change in the storage overpack (or HI-TRAC), if any, after any event of structural consequence to the overpack (or transfer cask), does not preclude ready retrievability of the contained MPC.

Stresses arise in the components of the HI-STORM 100 System due to various loads that originate under normal, off-normal, or accident conditions. These individual loads are combined to form load combinations. Stresses and stress intensities resulting from the load combinations are compared to their respective allowable stresses and stress intensities. The following subsections present loads, load combinations, and the allowable limits germane to them for use in the structural analyses of the MPC, the overpack, and the HI-TRAC transfer cask.

3.1.2.1 Loads and Load Combinations

The individual loads applicable to the HI-STORM 100 System and the HI-TRAC cask are defined in Section 2.2 of this report (Table 2.2.13). Load combinations are developed by assembling the individual loads that may act concurrently, and possibly, synergistically (Table 2.2.14). In this subsection, the individual loads are further clarified as appropriate and the required load combinations are identified. Table 3.1.1 contains the load combinations for the storage overpack where kinematic stability is of primary importance. The load combinations where stress or load level is of primary importance are set forth in Table 3.1.3 for the MPC fuel basket, in Table 3.1.4 for the MPC confinement boundary, and in Table 3.1.5 for the storage overpack and the HI-TRAC transfer cask. Load combinations are applied to the mathematical models of the MPCs, the overpack, and the HI-TRAC. Results of the analyses carried out under bounding load combinations are compared with their respective allowable stresses (or stress intensities, as applicable). The analysis results from the bounding load combinations are also assessed, where warranted, to ensure satisfaction of the functional performance criteria discussed in the preceding subsection.

3.1.2.1.1 Individual Load Cases

The individual loads that address each design criterion applicable to the structural design of the HI-STORM 100 System are catalogued in Table 2.2.13. Each load is given a symbol for subsequent use in the load combination listed in Table 2.2.14.

Accident condition and natural phenomena-induced events, collectively referred to as the "Level D" condition in Section III of the ASME Boiler & Pressure Vessel Codes, in general, do not have a universally prescribed limit. For example, the impact load from a tornado-borne missile, or the overturning load under flood or tsunami, cannot be prescribed as design basis values with absolute certainty that all ISFSI sites will be covered. Therefore, as applicable, allowable magnitudes of such loadings are postulated for the HI-STORM 100 System. The allowable values are drawn from regulatory and industry documents (such as for tornado missiles and wind) or from an intrinsic limitation in the system (such as the permissible "drop height" under a postulated handling accident). In the following, the essential characteristic of each "Level D" type loading is explained.

3.1.2.1.1.1 Tip-Over

It is required to demonstrate that the free-standing HI-STORM 100 storage overpack, containing a loaded MPC, will not tip over as a result of a postulated natural phenomenon event, including tornado wind, a tornado-generated missile, a seismic or a hydrological event (flood). However, to demonstrate the defense-in-depth features of the design, a non-mechanistic tip-over scenario per NUREG-1536 is analyzed. Since the HI-STORM 100S has an overall length that is less than the regular HI-STORM 100, the maximum impact velocity of the overpack will be reduced. Therefore, the results of the tipover analysis for the HI-STORM 100 (reported in Appendix 3.A) are bounding for the HI-STORM 100S. The potential of the HI-STORM 100 Overpack tipping over during the lowering (or raising) of the loaded MPC into (or out of) it with the HI-TRAC cask mounted on it is ruled out because of the safeguards and devices mandated by this FSAR for such operations

(Subsection 2.3.3.1 and Technical Specification 4.9). The physical and procedural barriers under the MPC handling operations have been set down in the FSAR to preclude overturning of the HI-STORM/HI-TRAC assemblage with an extremely high level of certainty. Much of the ancillary equipment needed for the MPC transfer operations must be custom engineered to best accord with the structural and architectural exigencies of the ISFSI site. Therefore, with the exception of the HI-TRAC cask, their design cannot be prescribed, a priori, in this FSAR. However, carefully drafted Design Criteria and conditions of use set forth in this FSAR eliminate the potential of weakening of the safety measures contemplated herein to preclude an overturning event during MPC transfer operations. Subsection 2.3.3.1 contains a comprehensive set of design criteria for the ancillary equipment and components required for MPC transfer operations to ensure that the design objective of precluding a kinematic instability event during MPC transfer operations is met. Further information on the steps taken to preclude system overturning during MPC transfer operations may be found in Chapter 8, Section 8.0.

In the HI-STORM 100A configuration, wherein the overpack is physically anchored to the ISFSI pad, the potential for a tip-over is a' priori precluded. Therefore, the ISFSI pad need not be engineered to be sufficiently compliant to limit the peak MPC deceleration to Table 2.2.8 values. The stiffness of the pad, however, may be controlled by the ISFSI structural design and, therefore, may result in a reduced "carry height" from that specified for a free-standing cask. If a non-single failure proof lifting device is employed to carry the cask over the pad, determination of maximum carry height must be performed by the ISFSI owner once the ISFSI pad design is formalized.

3.1.2.1.1.2 Handling Accident

A handling accident during transport of a loaded HI-STORM 100 storage overpack is assumed to result in a vertical drop. The HI-STORM 100 storage overpack will not be handled in a horizontal position while containing a loaded MPC. Therefore, a side drop is not considered a credible event.

HI-TRAC can be carried in a horizontal orientation while housing a loaded MPC. Therefore, a handling accident during transport of a loaded HI-TRAC in a horizontal orientation is considered to be a credible accident event.

As discussed in the foregoing, the vertical drop of the HI-TRAC and the tip-over of the assemblage of a loaded HI-TRAC on the top of the HI-STORM 100 storage overpack during MPC transfer operations do not need to be considered.

3.1.2.1.1.3 Flood

The postulated flood event results into two discrete scenarios which must be considered; namely,

1. stability of the HI-STORM 100 System due to flood water velocity, and
2. structural effects of hydrostatic pressure and water velocity induced lateral pressure.

The maximum hydrostatic pressure on the cask in a flood where the water level is conservatively set at 125 feet is calculated as follows:

Using

p = the maximum hydrostatic pressure on the system (psi),
γ = weight density of water = 62.4 lb/ft^3
h = the height of the water level = 125 ft;

The maximum hydrostatic pressure is

$$p = \gamma h = (62.4 \text{ lb/ft}^3)(125 \text{ ft})(1 \text{ ft}^2/144 \text{ in}^2) = 54.2 \text{ psi}$$

The accident condition design external pressure for the MPC (Table 2.2.1) bounds the maximum hydrostatic pressure exerted by the flood.

3.1.2.1.1.4 Explosion

Explosion, by definition, is a transient event. Explosive materials (except for the short duration when a limited quantity of motive fuel for placing the loaded MPC on the ISFSI pad is present in the tow vehicle) are prohibited in the controlled area by specific stipulation in the HI-STORM 100 Technical Specification. However, pressure waves emanating from explosions in areas outside the ISFSI are credible.

Pressure waves from an explosive blast in a property near the ISFSI site result in an impulsive aerodynamic loading on the stored HI-STORM 100 Overpacks. Depending on the rapidity of the pressure build-up, the inside and outside pressures on the HI-STORM METCON™ shell may not equalize, leading to a net lateral loading on the upright overpack as the pressure wave traverses the overpack. The magnitude of the dynamic pressure wave is conservatively set to a value below the magnitude of the pressure differential that would cause a tip-over of the cask if the pulse duration was set at one second. With the maximum design basis pressure pulse established (by setting the design basis pressure differential sufficiently low that cask tip-over is not credible due to the travelling pressure wave), the stress state under this condition requires analysis. The lateral pressure difference, applied over the overpack full height, causes axial and circumferential stresses and strains to develop. Level D stress limits must not be exceeded under this state of stress. It must also be demonstrated that no permanent ovalization of the cross section occurs that leads to loss of clearance to remove the MPC after the explosion.

Once the pressure wave traverses the cask body, then an elastic stability evaluation is warranted. An all-enveloping pressure from the explosion may threaten safety by buckling the overpack outer shell.

In contrast to the overpack, the MPC is a closed pressure vessel. Because of the enveloping overpack around it, the explosive pressure wave would manifest as an external pressure on the external surface of the MPC.

The maximum overpressure on the MPC resulting from an explosion is limited by the HI-STORM Technical Specification to be equal to or less than the accident condition design external pressure or external pressure differential specified in Table 2.2.1. The design external pressure differential is applied as a component of the load combinations.

3.1.2.1.1.5 Tornado

The three components of a tornado load are:

1. pressure changes,
2. wind loads, and
3. tornado-generated missiles.

Wind speeds and tornado-induced pressure drop are specified in Table 2.2.4. Tornado missiles are listed in Table 2.2.5. A central functional objective of a storage overpack is to maintain the integrity of the "confinement boundary", namely, the multi-purpose canister stored inside it. This operational imperative requires that the mechanical loadings associated with a tornado at the ISFSI do not jeopardize the physical integrity of the loaded MPC. Potential consequences of a tornado on the cask system are:

- Instability (tip-over) due to tornado missile impact plus either steady wind or impulse from the pressure drop (only applicable for free-standing cask).
- Stress in the overpack induced by the lateral force caused by the steady wind or missile impact.
- Loadings applied on the MPC transmitted to the inside of the overpack through its openings or as a secondary effect of loading on the enveloping overpack structure.
- Excessive storage overpack permanent deformation that may prevent ready retrievability of the MPC.
- Excessive storage overpack permanent deformation that may significantly reduce the shielding effectiveness of the storage overpack.

Analyses must be performed to ensure that, due to the tornado-induced loadings:

- The loaded overpack does not become kinematically unstable (only applicable for free-standing cask).

- The overpack does not deform plastically such that the retrievability of the stored MPC is threatened.

- The MPC does not sustain an impact from an incident missile.

- The MPC is not subjected to inertia loads (acceleration or deceleration) in excess of its design basis limit set forth in Chapter 2 herein.

- The overpack does not deform sufficiently due to tornado-borne missiles such that the shielding effectiveness of the overpack is significantly affected.

The results obtained for the HI-STORM 100 bound the corresponding results for HI-STORM 100S because of the reduced height. In the anchored configuration (HI-STORM 100A), the kinematic stability requirement stated above is replaced with the requirement that the stresses in the anchor studs do not exceed level D stress limits for ASME Section III, Class 3, Subsection NF components.

3.1.2.1.1.6 Earthquake

Subsections 2.2.3.7 and 3.4.7 contain the detailed specification of the seismic inputs applied to the HI-STORM 100 System. The design basis earthquake is assumed to be at the top of the ISFSI pad. Potential consequences of a seismic event are sliding/overturning of a free-standing cask, overstress of the sector lugs and anchor studs for the anchored HI-STORM 100A, and lateral force on the overpack causing excessive stress and deformation of the storage overpack.

In the anchored configuration (HI-STORM 100A), a seismic event results in a fluctuation in the state of stress in the anchor bolts and a local bending action on the sector lugs.

Analyses must be performed to ensure that:

- The maximum axial stress in the anchor bolts remains below the Level D stress limits for Section III Class 3 Subsection NF components.

- The maximum primary membrane plus bending stress intensity in the sector lugs during the DBE event satisfies Level D stress limits of the ASME Code, Subsection NF.

- The anchor bolts will not sustain fatigue failure due to pulsation in their axial stress during the DBE event.

- The stress in the weld line joining the sector lugs to the HI-STORM 100 weldment is within Subsection NF limits for Level D condition.

3.1.2.1.1.7 Lightning

The HI-STORM 100 Overpack contains over 25,000 lb of highly conductive carbon steel with over 700 square feet of external surface area. Such a large surface area and metal mass is adequate to dissipate any lightning that may strike the HI-STORM 100 System. There are no combustible materials on the HI-STORM 100 surface. Therefore, lightning will not impair the structural performance of components of the HI-STORM 100 System that are important to safety.

3.1.2.1.1.8 Fire

The potential structural consequences of a fire are: the possibility of an interference developing between the storage overpack and the loaded MPC due to free thermal expansion; and, the degradation of material properties to the extent that their structural performance is affected during a subsequent recovery action. The fire condition is addressed to the extent necessary to demonstrate that these adverse structural consequences do not materialize.

3.1.2.1.1.9 100% Fuel Rod Rupture

The effect on structural performance by 100% fuel rod rupture is felt as an increase in internal pressure. The accident internal pressure limit set in Chapter 2 bounds the pressure from 100% fuel rod rupture. Therefore, no new load condition has been identified.

3.1.2.1.2 Load Combinations

Load combinations are created by summing the effects of several individual loads. The load combinations are selected for the normal, off-normal, and accident conditions. The loadings appropriate for HI-STORM 100 under the various conditions are presented in Table 2.2.14. These loadings are combined into meaningful combinations for the various HI-STORM 100 System components in Tables 3.1.1, and 3.1.3-3.1.5. Table 3.1.1 lists the load combinations that address overpack stability. Tables 3.1.3 through 3.1.5 list the applicable load combinations for the fuel basket, the enclosure vessel, and the overpack and HI-TRAC, respectively.

As discussed in Subsection 2.2.7, the number of discrete load combinations for each situational condition (i.e., normal, off-normal, etc.) is consolidated by defining bounding loads for certain groups of loadings. Thus, the accident condition pressure P_o^* bounds the surface loadings arising from accident and extreme natural phenomenon events, namely, tornado wind W', flood F, and explosion E^*.

As noted previously, certain loads, namely earthquake E, flowing water under flood condition F, force from an explosion pressure pulse F*, and tornado missile M, act to destabilize a cask. Additionally, these loads act on the overpack and produce essentially localized stresses at the HI-STORM 100 System to ISFSI interface. Table 3.1.1 provides the load combinations that are relevant to the stability analyses of free-standing casks. The site ISFSI DBE zero period acceleration (ZPA) must be bounded by the design basis seismic ZPA defined by the Load Combination C of Table 3.1.1 to demonstrate that the margin against tip-over during a seismic event is maintained.

The major constituents in the HI-STORM 100 System are: (i) the fuel basket, (ii) the enclosure vessel, (iii) the HI-STORM 100 (or HI-STORM 100S) Overpack, and (iv) the HI-TRAC transfer cask. The fuel basket and the enclosure vessel (EV) together constitute the multi-purpose canister. The multi-purpose canister (MPC) is common to HI-STORM 100 and HI-STAR 100, and as such, has been extensively analyzed in the storage FSAR and transport SAR (Dockets 72-1008 and 71-9261) for HI-STAR 100. Many of the loadings on the MPC (fuel basket and enclosure vessel) are equal to or bounded by loadings already considered in the HI-STAR 100 SAR documents. Where such analyses have been performed, their location in the HI-STAR 100 SAR documents is indicated in this HI-STORM 100 SAR for continuity in narration. A complete account of analyses and results for all load combinations for all four constituents parts is provided in Section 3.4 as required by Regulatory Guide 3.61.

In the following, the loadings listed as applicable for each situational condition in Table 2.2.14 are addressed in meaningful load combinations for the fuel basket, enclosure vessel, and the overpack. Each component is considered separately.

Fuel Basket

Table 3.1.3 summarizes all loading cases (derived from Table 2.2.14) that are germane to demonstrating compliance of the fuel baskets to Subsection NG when these baskets are housed within HI-STORM 100 or HI-TRAC.

The fuel basket is not a pressure vessel; therefore, the pressure loadings are not meaningful loads for the basket. Further, the basket is structurally decoupled from the enclosure vessel. The gap between the basket and the enclosure vessel is sized to ensure that no constraint of free-end thermal expansion of the basket occurs. The demonstration of the adequacy of the basket-to the-enclosure vessel (EV) gap to ensure absence of interference is a physical problem that must be analyzed.

The normal handling loads on the fuel basket in an MPC within the HI-STORM 100 System or the HI-TRAC transfer cask are identical to or bounded by the normal handling loads analyzed in the HI-STAR 100 FSAR Docket Number 72-1008.

Three accident condition scenarios must be considered: (i) drop with the storage overpack axis vertical; (ii) drop with the HI-TRAC axis horizontal; and (iii) storage overpack tipover. The vertical drop scenario is considered in the HI-STAR 100 SAR.

The horizontal drop and tip-over must consider multiple orientation of the fuel basket, as the fuel basket is not radially symmetric. Therefore, two horizontal drop orientations are considered which are referred to as the 0 degree drop and 45 degree drop, respectively. In the 0 degree drop, the basket drops with its panels oriented parallel and normal to the vertical (see Figure 3.1.2). The 45-degree drop implies that the basket's honeycomb section is rotated meridionally by 45 degrees (Figure 3.1.3).

Enclosure Vessel

Table 3.1.4 summarizes all load cases that are applicable to structural analysis of the enclosure vessel to ensure integrity of the confinement boundary.

The enclosure vessel is a pressure vessel consisting of a cylindrical shell, a thick circular baseplate at the bottom, and a thick circular lid at the top. This pressure vessel must be shown to meet the primary stress intensity limits for ASME Section III Class 1 at the design temperature and primary plus secondary stress intensity limits under the combined action of pressure plus thermal loads.

Normal handling of the enclosure vessel is considered in Docket 72-1008; the handling loads are independent of whether the enclosure vessel is within HI-STAR 100, HI-STORM 100, or HI-TRAC.

The off-normal condition handling loads are identical to the normal condition and, therefore, a separate analysis is not required.

Analyses presented in this chapter are intended to demonstrate that the maximum decelerations in drop and tip-over accident events are limited by the bounding values in Table 3.1.2. The vertical drop event is considered in the HI-STAR 100 SAR Docket 72-1008.

The deceleration loadings developed in the enclosure vessel during a horizontal drop event are combined with those due to P_i (internal pressure) acting alone. The accident condition pressure is bounded by P_i^*. The design basis deceleration for the MPC in the HI-STAR 100 System is 60g's, whereas the design basis deceleration for the MPC in the HI-STORM 100 System is 45g's. The design pressures are identical. The fire event (T^* loading) is considered for ensuring absence of interference between the enclosure vessel and the fuel basket and between the enclosure vessel and the overpack.

It is noted that the MPC basket-enclosure vessel thermal expansion and stress analyses are reconsidered in this submittal to reflect the different MPC-to-overpack gaps that exist in the HI-STORM 100 Overpack versus the HI-STAR 100 overpack, coupled with the different design basis decelerations.

Storage Overpack

Table 3.1.5 identifies the load cases to be considered for the overpack. These are in addition to the kinematic criteria listed in Table 3.1.1. Within these load cases and kinematic criteria, the following items must be addressed:

Normal Conditions

- The dead load of the HI-TRAC with the heaviest loaded MPC (dry) on top of the HI-STORM 100 Overpack must be shown to be able to be supported by the metal-concrete (METCON™) structure consisting of the two concentric steel shells and the steel rib plates, and by the concrete columns away from the vent regions.

- The dead load of the HI-STORM 100 Overpack itself must be supportable by the steel structure with no credit for concrete strength other than self-support in compression.

- Normal handling loads must be accommodated without taking any strength credit from the contained concrete other than self-support in compression.

Accident Conditions

- Maximum flood water velocity for the overpack with an empty MPC must be specified to ensure that no sliding or tip-over occurs.

- Tornado missile plus wind on an overpack with an empty MPC must be specified to demonstrate that no cask tip-over occurs.

- Tornado missile penetration analysis must demonstrate that the postulated large and penetrant missiles cannot contact the MPC. The small missile must be shown not to penetrate the MPC pressure vessel boundary, since it can enter the overpack cavity through the vent ducts.

- Under seismic conditions, a fully loaded, free-standing HI-STORM 100 overpack must be demonstrated to not tip over under the maximum ZPA event. The maximum sliding of the overpack must demonstrate that casks will not impact each other.

- Under a non-mechanistic postulated tip-over of a fully loaded, free-standing HI-STORM 100 overpack, the overpack lid must not dislodge.

- Accident condition stress levels must not be exceeded in the steel and compressive stress levels in the concrete must remain within allowable limits.

- Accident condition induced gross general deformations of the storage overpack must be limited to values that do not preclude ready retrievability of the MPC.

As noted earlier, analyses performed using the HI-STORM 100 generally provide results that are identical to or bound results for the shorter HI-STORM 100S; therefore, analyses are not repeated specifically for the HI-STORM 100S unless the specific geometry changes significantly influence the safety factors.

HI-TRAC Transfer Cask

Table 3.1.5 identifies load cases applicable to the HI-TRAC transfer cask.

The HI-TRAC transfer cask must provide radiation protection, must act as a handling cask when carrying a loaded MPC, and in the event of a postulated accident must not suffer permanent deformation to the extent that ready retrievability of the MPC is compromised. This submittal includes three types of transfer casks: a 125-ton HI-TRAC (referred to as the HI-TRAC 125), a modified version of the HI-TRAC 125 called the HI-TRAC 125D, and a 100-ton HI-TRAC. The details of these three transfer casks are provided in the design drawings in Section 1.5. The same steel structures (i.e., shell thicknesses, lid thicknesses, etc.) are maintained with the only major differences being in the amount of lead shielding, the water jacket configuration, the bottom flange, and the lower dead weight loading. Therefore, all structural analyses performed for the HI-TRAC 125 are repeated for the HI-TRAC 125D and the HI-TRAC 100 only if it cannot be clearly demonstrated that the HI-TRAC 125 calculation is bounding.

3.1.2.2 Allowables

The important to safety components of the HI-STORM 100 System are listed in Table 2.2.6. Allowable stresses, as appropriate, are tabulated for these components for all service conditions.

In Subsection 2.2.5, the applicable service level from the ASME Code for determination of allowables is listed. Table 2.2.14 provides a tabulation of normal, off-normal, and accident conditions and the service levels defined in the ASME Code, along with the applicable loadings for each service condition.

Allowable stresses and stress intensities are calculated using the data provided in the ASME Code and Tables 2.2.10 through 2.2.12. Tables 3.1.6 through 3.1.16 contain numerical values of the stresses/stress intensities for all MPC, overpack, and HI-TRAC load bearing materials as a function of temperature.

In all tables the terms S, S_m, S_y, and S_u, respectively, denote the design stress, design stress intensity, minimum yield strength, and the ultimate strength. Property values at intermediate temperatures that are not reported in the ASME Code are obtained by linear interpolation. Property values are not extrapolated beyond the limits of the Code in any structural calculation.

Additional terms relevant to the analyses are extracted from the ASME Code (Figure NB-3222-1, for example) as follows:

Symbol	Description	Notes
P_m	Average primary stress across a solid section	Excludes effects of discontinuities and concentrations. Produced by pressure and mechanical loads.
P_L	Average stress across any solid section	Considers effects of discontinuities but not concentrations. Produced by pressure and mechanical loads, including earthquake inertial effects.
P_b	Primary bending stress	Component of primary stress proportional to the distance from the centroid of a solid section. Excludes the effects of discontinuities and concentrations. Produced by pressure and mechanical loads, including earthquake inertial effects.
P_e	Secondary expansion stress	Stresses that result from the constraint of free-end displacement. Considers effects of discontinuities but not local stress concentration. (Not applicable to vessels.)
Q	Secondary membrane plus bending stress	Self-equilibrating stress necessary to satisfy continuity of structure. Occurs at structural discontinuities. Can be caused by pressure, mechanical loads, or differential thermal expansion.
F	Peak stress	Increment added to primary or secondary stress by a concentration (notch), or, certain thermal stresses that may cause fatigue but not distortion. This value is not used in the tables.

It is shown that there is no interference between component parts due to free thermal expansion. Therefore, P_e does not develop within any HI-STORM 100 component.

It is recognized that the planar temperature distribution in the fuel basket and the overpack under the maximum heat load condition is the highest at the cask center and drops monotonically, reaching its lowest value at the outside surface. Strictly speaking, the allowable stresses/stress intensities at any location in the basket, the enclosure vessel, or the overpack should be based on the coincident metal temperature under the specific operating condition. However, in the interest of conservatism, reference temperatures are established for each component that are upper bounds on the metal temperature for each situational condition. Table 3.1.17 provides the reference temperatures for the fuel basket and the MPC canister utilizing Tables 3.1.6 through 3.1.16, and provides conservative numerical limits for the stresses and stress intensities for all loading cases. Reference temperatures for the MPC baseplate and the MPC lid are 400 degrees F and 550 degrees F, respectively, as specified in Table 2.2.3.

Finally, the lift devices in the HI-STORM 100 Overpack and HI-TRAC casks and the multi-purpose canisters, collectively referred to as "trunnions", are subject to specific limits set forth by NUREG-0612: the primary stresses in a trunnion must be less than the smaller of 1/10 of the material ultimate strength and 1/6 of the material yield strength under a normal handling condition (Load Case 01 in Table 3.1.5). The load combination D+H in Table 3.1.5 is equivalent to 1.15D. This is further explained in Subsection 3.4.3.

The region around the trunnions is part of the NF structure in HI-STORM 100 and HI-TRAC and NB pressure boundary in the MPC, and as such, must satisfy the applicable stress (or stress intensity) limits for the load combination. In addition to meeting the applicable Code limits, it is further required that the primary stress required to maintain equilibrium at the defined trunnion/mother structure interface must not exceed the material yield stress at three times the handling condition load (1.15D). This criterion, mandated by Regulatory Guide 3.61, Section 3.4.3, insures that a large safety factor exists on non-local section yielding at the trunnion/mother structure interface that would lead to unacceptable section displacement and rotation.

3.1.2.3 Brittle Fracture

The MPC canister and basket are constructed from a series of stainless steels termed Alloy X. These stainless steel materials do not undergo a ductile-to-brittle transition in the minimum temperature range of the HI-STORM 100 System. Therefore, brittle fracture is not a concern for the MPC components. Such an assertion can not be made a priori for the HI-STORM storage overpack and HI-TRAC transfer cask that contain ferritic steel parts. In normal storage mode, the lowest service temperature (LST) of the HI-STORM storage overpack structural members may reach -40°F in the limiting condition wherein the spent nuclear fuel (SNF) in the contained MPCs emits no (or negligible) heat and the ambient temperature is at -40°F (design minimum per Chapter 2: Principal Design Criteria). During the HI-STORM handling operations, the applicable lowest service temperature is 0°F (which is the threshold ambient temperature below which lifting and handling of the HI-STORM 100 Overpack or the HI-TRAC cask is not permitted by the Technical Specification). Therefore, two distinct LSTs are applicable to load bearing metal parts within the HI-STORM 100 Overpack and the HI-TRAC cask; namely,

LST = 0°F for parts used to lift the overpack or transfer cask (see Table 2.2.2 and Chapter 12). This includes the anchor block in the HI-STORM 100 Overpack, and pocket trunnions, lifting trunnions and the lifting trunnion block in HI-TRAC. Such items will henceforth be referred to as "significant-to-handling" (STH) parts. The applicable code for these elements of the structure is ANSI N14.6.

LST = -40°F for all HI-STORM "NF" components and 0°F for all HI-TRAC "NF" components. This includes all "NF" items not identified as an STH part.

It is important to ensure that all materials designated as "NF" or "STH" parts possess sufficient fracture toughness to preclude brittle fracture. For the STH parts, the necessary level of protection against brittle fracture is deemed to exist if the NDT (nil ductility transition) temperature of the part is at least 40° below the LST. Therefore, the required NDT temperature for all STH parts is -40°F.

It is well known that the NDT temperature of steel is a strong function of its composition, manufacturing process (viz., fine grain vs. coarse grain practice), thickness, and heat treatment. For example, according to Burgreen [3.1.3], increasing the carbon content in carbon steels from 0.1% to 0.8% leads to the change in NDT from -50°F to approximately 120°F. Likewise, lowering of the normalizing temperature in the ferritic steels from 1200°C to 900°C lowers the NDT from 10°C to -50°C [3.1.3]. It, therefore, follows that the fracture toughness of steels can be varied significantly within the confines of the ASME Code material specification set forth in Section II of the Code. For example, SA516 Gr. 70 (which is a principal "NF" material in the HI-STORM 100 Overpack), can have a maximum carbon content of up to 0.3% in plates up to four inches thick. Section II further permits normalizing or quenching followed by tempering to enhance fracture toughness. Manufacturing processes which have a profound effect on fracture toughness, but little effect on tensile or yield strength of the material, are also not specified with the degree of specificity in the ASME Code to guarantee a well defined fracture toughness. In fact, the Code relies on actual coupon testing of the part to ensure the desired level of protection against brittle fracture. For Section III, Subsection NF Class 3 parts, the desired level of protection is considered to exist if the lowest service temperature is equal to or greater than the NDT temperature (per NF 2311(b)(10)). Accordingly, the required NDT temperature for all load bearing metal parts in the HI-STORM 100 Overpack ("NF" and "STH") is -40°F. Likewise, the NDT temperature for all "NF" parts in HI-TRAC (except for "STH" parts) is set equal to 0°F.

From the standpoint of protection against brittle fracture, it should be recognized that setting the LST equal to the NDT temperature ensures that the fracture strength of the material containing small flaws is equal to its yield strength. In fact, as the stress calculations in this chapter ~~(and associated appendices)~~ would attest, the maximum primary tensile stress in the HI-STORM 100 Overpack is below 6,000 psi in all normal conditions of storage operating modes. Even in extreme environmental phenomena events, tensile stresses are below 6,000 psi, except for localized regions under postulated missile impacts or non-mechanistic tip-over. For ferritic steels (please see NF-2311(b)(7)), 6,000 psi is the threshold stress, at or below which crack propagation will not take place, no matter how low the metal temperature [3.1.3, p. 13]. (The threshold stress is the horizontal extension of the crack arrest temperature (CAT) curve in the fracture mechanics literature.)

The generally low value of tensile stress in the HI-STORM 100 storage overpack and in the HI-TRAC cask parts suggest that an NDT temperature requirement is not essential to ensure safety from crack growth. However, the aforementioned NDT temperature requirement of -40°F has been imposed to incorporate an additional layer of conservatism in the design.

The STH components (bolt anchor block (HI-STORM), lifting trunnion (HI-TRAC), lifting trunnion block (HI-TRAC), and pocket trunnion (HI-TRAC) have thicknesses greater than 2". SA350-LF3 has been selected as the material for these items (except for the lifting trunnions) due to its capability to maintain acceptable fracture toughness at low temperatures (see Table 5 in SA350 of ASME Section

IIA). Additionally, material for the HI-TRAC top flange, pool lid (100 ton) and pool lid outer ring (125 ton) has been defined as SA350-LF3, SA350-LF2, or SA203E (see Table A1.15 of ASME Section IIA) in order to achieve low temperature fracture toughness. The HI-TRAC lifting trunnion is fabricated from SB-637 Grade N07718, a high strength nickel alloy material. This material has a high resistance to fracture at low temperatures. All other steel structural materials in the HI-STORM 100 overpack and HI-TRAC cask are made of SA516-70 or SA515-70 (with some components having an option for SA203E or SA350-LF3 depending on material availability).

Table 3.1.18 provides a summary of impact testing requirements to satisfy the requirements for prevention of brittle fracture.

3.1.2.4 Fatigue

In storage, the HI-STORM 100 System is not subject to significant cyclic loads. Failure due to fatigue is not a concern for the HI-STORM 100 System.

In an anchored installation, however, the anchor studs sustain a pulsation in the axial load during the seismic event. The amplitude of axial stress variation under the DBE event is computed in this chapter and a significant margin of safety against fatigue failure during the DBE event is demonstrated.

The system is subject to cyclic temperature fluctuations. These fluctuations result in small changes of thermal expansions and pressures in the MPC. The loads resulting from these changes are small and do not significantly contribute to the "usage factor" of the cask.

Inspection of the HI-TRAC trunnions specified in Chapter 9 will preclude use of a trunnion that exhibits visual damage.

3.1.2.5 Buckling

Certain load combinations subject structural sections with relatively large slenderness ratios (such as the enclosure vessel shell) to compressive stresses that may actuate buckling instability before the allowable stress is reached. Tables 3.1.4 and 3.1.5 list load combinations for the enclosure vessel and the HI-STORM 100/HI-TRAC structures; the cases which warrant stability (buckling) check are listed therein (note that a potential buckling load has already been identified as a consequence of a postulated explosion).

TABLE 3.1.1

LOAD COMBINATIONS SIGNIFICANT TO HI-STORM 100 OVERPACK KINEMATIC STABILITY ANALYSIS

Loading Case	Combinations†	Comment	Analysis of this Load Case Presented in:
A	D + F	This case establishes flood water flow velocity with a minimum safety factor of 1.1 against overturning and sliding.	Subsection 3.4.6
B	D + M + W'	Demonstrate that the HI-STORM 100 Overpack with minimum SNF stored (minimum D) will not tip over.	*Subsection 3.4.8*~~Appendix 3.C~~
C	D + E	Establish the value of ZPA†† that will not cause the overpack to tip over.	Subsection 3.4.7

† Loading symbols are defined in Table 2.2.13

†† ZPA is zero period acceleration

TABLE 3.1.2

DESIGN BASIS DECELERATIONS FOR THE DROP EVENTS

Case	Value† (in multiples of acceleration due to gravity)
Vertical axis drop (HI-STORM 100 Overpack only)	45
Horizontal axis (side) drop (HI-TRAC only)	45

† The design basis value is set from the requirements of the HI-STORM 100 System, as its components are operated as a storage system. The MPC is designed to higher loadings (60g's vertical and horizontal) when in a HI-STAR 100 overpack. Analysis of the MPC in a HI-STAR 100 overpack under a 60g loading is provided in HI-STAR 100 Docket Numbers 71-9261 and 72-1008.

TABLE 3.1.3

LOADING CASES FOR THE FUEL BASKET

Load Case I.D.	Loading†	Notes	Location Where this Case is Evaluated
F1	T, T'	Demonstrate that the most adverse of the temperature distributions in the basket will not cause fuel basket to expand and contact the enclosure vessel wall. Compute the secondary stress intensity and show that it is small.	~~Appendices 3.I, 3.J, 3.U, 3.V, 3.W;~~ Subsection 3.4.4.2
F2 (Note 1)	D + H	Conservatively add the stresses in the basket due to vertical and horizontal orientation handling to form a bounding stress intensity.	*Section 3.4* ~~Section~~Docket 72-1008
F3 F3.a (Note 2)	D + H'	Vertical axis drop event	Docket Number 72-1008, Subsection 3.4.4.3.1.6
F3.b (Note 3)	D + H'	Side Drop, 0 degree orientation (Figure 3.1.2)	Table 3.4.6
F3.c (Note 3)	D + H'	Side Drop, 45 degree orientation (Figure 3.1.3)	Table 3.4.6

Notes:

1. Load Case F2 for the HI-STORM 100 System is identical to Load Case F2 for the HI-STAR 100 System in Docket Number 72-1008, Table 3.1.3.

2. Load Case F3.a is bounded by the 60g deceleration analysis performed for the HI-STAR 100 System in Docket Number 72-1008, Subsection 3.4.4.3.1.6. The HI-STORM 100 vertical deceleration loading is limited to 45g.

3. Load Cases F3.b and F3.c are analyzed here for a 45g deceleration, while the MPC is housed within a HI-STORM 100 Overpack or a HI-TRAC transfer cask. The initial clearance at the interface between the MPC shell and the HI-STORM 100 Overpack or HI-TRAC transfer cask is greater than or equal to the initial clearance between the MPC shell and the HI-STAR 100 overpack. This difference in clearance directly affects the stress field. The side drop analysis for the MPC in the HI-STAR 100 overpack under 60g's bounds the corresponding analysis of the MPC in HI-TRAC for 45 g's.

† The symbols used for the loadings are defined in Table 2.2.13.

TABLE 3.1.4

LOADING CASES FOR THE ENCLOSURE VESSEL (CONFINEMENT BOUNDARY)

Load Case I.D.	Load Combination†	Notes	Comments and Location Where this Case is Analyzed
E1 (Note 1) E1.a	Design internal pressure, P_I	Primary stress intensity limits in the shell, baseplate, and closure ring	E1.a Lid: Docket 72-1008 3.E.8.1.1 Baseplate: Docket 72-1008 3.I.8.1 Shell: 3.4.4.3.1.2 Supports: N/A
E1.b	Design external pressure, P_o	Primary stress intensity limits, buckling stability	E1.b Lid: P_i bounds Baseplate: P_i bounds Shell: Docket 72-1008 –*Buckling Methodology in 3.H* ~~3.H (Case 4)~~ Supports: N/A
E1.c	Design internal pressure, P_i, Plus Temperature, T	Primary plus secondary stress intensity under Level A condition	E1.c Lid, Baseplate, and Shell: Section 3.4.4.3.1.2
E2	D + H + (P_i,P_o)††	Vertical lift, internal operating pressure conservatively assumed to be equal to the normal design pressure. Principal area of concern is the lid assembly.	Lid: Docket 72-1008 3.E.8.1.2 Baseplate: Docket 72-1008 3.I.8.2 Shell: Docket 72-1008 *Section 3.43.AA* ~~(stress)~~ Docket 72-1008 *Buckling (methodology in 3.H of Docket 72-1008)* ~~3.H (Case 4) (buckling)~~ Supports: Docket 72-1008 *Section 3.43.AA*

† The symbols used for the loadings are defined in Table 2.2.13.

†† The notation (P_i, P_o) means that both cases are checked with either P_o or P_i applied.

TABLE 3.1.4 (CONTINUED)

LOADING CASES FOR THE ENCLOSURE VESSEL (CONFINEMENT BOUNDARY)

Load Case I.D.	Load Combination†	Notes	Comments and Location Where this Case is Analyzed
E3			
E3.a (Note 2)	D + H' + (P_o, P_i)	Vertical axis drop event	E3.a Lid: Docket 72-1008 3.E.8.2.1-2 Baseplate: Docket 72-1008 3.I.8.3 Shell: *Buckling (methodology in 3.H of Docket 72-1008)* ~~Docket 72-1008 3.H (Case 5) (Buckling)~~ Supports: N/A
E3.b (Note 3)	D + H' + (P_i, P_o)	Side drop, 0 degree orientation (Figure 3.1.2)	E3.b Lid: End drop bounds Baseplate: End drop bounds Shell: Table 3.4.6 Supports: Table 3.4.6~~, 3.Y~~
E3.c (Note 3)	D + H' + (P_i, P_o)	Side drop, 45 degree orientation (Figure 3.1.3)	E3.c Lid: End drop bounds Baseplate: End drop bounds Shell: Table 3.4.6 Supports: Table 3.4.6~~, 3.Y~~
E4	T	Demonstrate that interference with the overpack will not develop for T.	Section 3.4.4.2

† The symbols used for the loadings are defined in Table 2.2.13.

TABLE 3.1.4 (CONTINUED)

LOADING CASES FOR THE ENCLOSURE VESSEL (CONFINEMENT BOUNDARY)

Load Case I.D.	Load Combination†	Notes	Comments and Location Where this Case is Analyzed
E5 (Note 1)	P_i^* or P_o^* + D + T^*	Demonstrate compliance with level D stress limits – buckling stability.	Lid Docket 72-1008 3.E.8.2.1.3 Baseplate Docket 72-1008 3.I.8.4 Shell *Buckling (methodology in 3.H of Docket 72-1008)* ~~Docket 72-1008 3.H (Case 6) (buckling)~~ Docket 72-1008 3.4.4.3.1.5 (thermal stress) Supports N/A

Notes:

1. Load Cases E1.a, E1.b, E2, and E5 are identical to the load cases presented in Docket Number 72-1008, Table 3.1.4. Design pressures and MPC weights are identical.

2. Load Case E3.a is bounded by the 60g deceleration analysis performed for the HI-STAR 100 System in Docket Number 72-1008, *Section 3.4*~~Appendix 3.AA~~. The HI-STORM 100 vertical deceleration loading is limited to 45g.

3. Load Cases E3.b and E3.c are analyzed in this HI-STORM 100 SAR for a 45g deceleration, while the MPC is housed within the HI-STORM 100 storage overpack. The interface between the MPC shell and storage overpack is not identical to the MPC shell and HI-STAR 100 overpack. The analysis for an MPC housed in HI-TRAC is not performed since results are bounded by those reported in the HI-STAR 100 TSAR for a 60g deceleration.

† The symbols used for the loadings are defined in Table 2.2.13.

TABLE 3.1.5

LOAD CASES FOR THE HI-STORM 100 OVERPACK/HI-TRAC TRANSFER CASK

Load Case I.D.	Loading†	Notes	Location in FSAR ~~Where this Case is Analyzed~~
01	D + H + T + (P_o,P_i)	Vertical load handling of HI-STORM 100 Overpack/HI-TRAC.	Overpack *3.4.3.5*~~3.D~~ HI-TRAC Shell *3.4.3.3, 3.4.3.4*~~3.AE~~ Pool lid *3.4.3.8*~~3.AB~~ Transfer lid *3.4.3.9*~~3.AD~~
02			
02.a	D + H' + (P_o,P_i)	Storage Overpack: End drop; primary stress intensities must meet level D stress limits.	Overpack *3.4.4.3.2.3* ~~3.M~~
02.b	D + H' + (P_o,P_i)	HI-TRAC: Horizontal (side) drop; meet level D stress limits for NF Class 3 components away from the impacted zone; show lids stay in-place. Show primary and secondary impact decelerations are within design basis. (This case is only applicable to HI-TRAC.)	HI-TRAC Shell *3.4.9.1*~~3.Z~~ Transfer Lid *3.4.4.3.3.3* ~~3.AD~~ Slapdown *3.4.9.2*~~3.AN~~
02.c	D + H'	Storage Overpack: Tip-over; any permanent deformations must not preclude ready retrieval of the MPC.	Overpack *3.4.10*, 3.A ~~,3.B~~

† The symbols used for the loadings are defined in Table 2.2.13

TABLE 3.1.5 (CONTINUED)

LOAD CASES FOR THE HI-STORM 100 OVERPACK/HI-TRAC TRANSFER CASK

Load Case I.D.	Loading†	Notes	Location in FSAR ~~Where this Case is Analyzed~~
03	D (water jacket)	Satisfy primary membrane plus bending stress limits for water jacket (This case is only applicable to HI-TRAC).	*3.4.4.3.3.4* ~~3.AG~~
04	M (penetrant missiles)	Demonstrate that no thru-wall breach of the HI-STORM overpack or HI-TRAC transfer cask occurs, and the primary stress levels are not exceeded. Small and intermediate missiles are examined for HI-STORM and HI-TRAC. Large missile penetration is also examined for HI-TRAC.	Overpack *3.4.8.1*~~3.G~~ HI-TRAC *3.4.8.2.1, 3.4.8.2.2* ~~3.AN, 3.H~~
05	P_o	Explosion: must not produce buckling or exceed primary stress levels in the overpack structure.	*3.4.4.5.2, 3.4.7.2*~~3.B, 3.AK~~

Notes:

1. Under each of these load cases, different regions of the structure are analyzed to demonstrate compliance.

† The symbols used for the loadings are defined in Table 2.2.13

TABLE 3.1.6

DESIGN, LEVELS A AND B: STRESS INTENSITY

Code: ASME NB
Material: SA203-E
Service Conditions: Design, Levels A and B
Item: Stress Intensity

Temp. (Deg.F)	Classification and Value (ksi)					
	S_m	P_m†	P_L†	$P_L + P_b$†	$P_L + P_b + Q$††	P_e††
-20 to 100	23.3	23.3	35.0	35.0	69.9	69.9
200	23.3	23.3	35.0	35.0	69.9	69.9
300	23.3	23.3	35.0	35.0	69.9	69.9
400	22.9	22.9	34.4	34.4	68.7	68.7
500	21.6	21.6	32.4	32.4	64.8	64.8

Definitions:

S_m = Stress intensity values per ASME Code
P_m = Primary membrane stress intensity
P_L = Local membrane stress intensity
P_b = Primary bending stress intensity
P_e = Expansion stress
Q = Secondary stress
$P_L + P_b$ = Either primary or local membrane plus primary bending

Definitions for Table 3.1.6 apply to all following tables unless modified.

Notes:

1. Limits on values are presented in Table 2.2.10.

† Evaluation required for Design condition only.
†† Evaluation required for Levels A and B only. P_e not applicable to vessels.

TABLE 3.1.7

LEVEL D: STRESS INTENSITY

Code: ASME NB
Material: SA203-E
Service Condition: Level D
Item: Stress Intensity

Temp. (Deg. F)	Classification and Value (ksi)		
	P_m	P_L	$P_L + P_b$
-20 to 100	49.0	70.0	70.0
200	49.0	70.0	70.0
300	49.0	70.0	70.0
400	48.2	68.8	68.8
500	45.4	64.9	64.9

Notes:

1. Level D allowables per NB-3225 and Appendix F, Paragraph F-1331.
2. Average primary shear stress across a section loaded in pure shear may not exceed 0.42 S_u.
3. Limits on values are presented in Table 2.2.10.
4. P_m, P_L, and P_b are defined in Table 3.1.6.

TABLE 3.1.8

DESIGN, LEVELS A AND B: STRESS INTENSITY

Code: ASME NB
Material: SA350-LF3
Service Conditions: Design, Levels A and B
Item: Stress Intensity

Temp. (Deg.F)	Classification and Value (ksi)					
	S_m	P_m†	P_L†	$P_L + P_b$†	$P_L + P_b + Q$††	P_e††
-20 to 100	23.3	23.3	35.0	35.0	69.9	69.9
200	22.8	22.8	34.2	34.2	68.4	68.4
300	22.2	22.2	33.3	33.3	66.6	66.6
400	21.5	21.5	32.3	32.3	64.5	64.5
500	20.2	20.2	30.3	30.3	60.6	60.6
600	18.5	18.5	27.75	27.75	55.5	55.5
700	16.8	16.8	25.2	25.2	50.4	50.4

Notes:

1. Source for S_m is ASME Code
2. Limits on values are presented in Table 2.2.10.
3. S_m, P_m, P_L, P_b, Q, and P_e are defined in Table 3.1.6.

† Evaluation required for Design condition only.

†† Evaluation required for Levels A and B conditions only. P_e not applicable to vessels.

TABLE 3.1.9

LEVEL D, STRESS INTENSITY

Code: ASME NB
Material: SA350-LF3
Service Conditions: Level D
Item: Stress Intensity

Temp. (Deg.F)	Classification and Value (ksi)		
	P_m	P_L	$P_L + P_b$
-20 to 100	49.0	70.0	70.0
200	48.0	68.5	68.5
300	46.7	66.7	66.7
400	45.2	64.6	64.6
500	42.5	60.7	60.7
600	38.9	58.4	58.4
700	35.3	53.1	53.1

Notes:

1. Level D allowables per NB-3225 and Appendix F, Paragraph F-1331.
2. Average primary shear stress across a section loaded in pure shear may not exceed 0.42 S_u.
3. Limits on values are presented in Table 2.2.10.
4. P_m, P_L, and P_b are defined in Table 3.1.6.

TABLE 3.1.10

DESIGN AND LEVEL A: STRESS

Code: ASME NF
Material: SA516, Grade 70, SA350-LF3, SA203-E
Service Conditions: Design and Level A
Item: Stress

Temp. (Deg.F)	Classification and Value (ksi)		
	S	Membrane Stress	Membrane plus Bending Stress
-20 to 650	17.5	17.5	26.3
700	16.6	16.6	24.9

Notes:

1. S = Maximum allowable stress values from Table 1A of ASME Code, Section II, Part D.
2. Stress classification per Paragraph NF-3260.
3. Limits on values are presented in Table 2.2.12.

TABLE 3.1.11

LEVEL B: STRESS

Code: ASME NF
Material: SA516, Grade 70, SA350-LF3, and SA203-E
Service Conditions: Level B
Item: Stress

Temp. (Deg.F)	Classification and Value (ksi)	
	Membrane Stress	Membrane plus Bending Stress
-20 to 650	23.3	34.9
700	22.1	33.1

Notes:

1. Limits on values are presented in Table 2.2.12 with allowables from Table 3.1.10.

TABLE 3.1.12

LEVEL D: STRESS INTENSITY

Code: ASME NF
Material: SA516, Grade 70
Service Conditions: Level D
Item: Stress Intensity

Temp. (Deg.F)	Classification and Value (ksi)		
	S_m	P_m	$P_m + P_b$
-20 to 100	23.3	45.6	68.4
200	23.1	41.5	62.3
300	22.5	40.4	60.6
400	21.7	39.1	58.7
500	20.5	36.8	55.3
600	18.7	33.7	50.6
650	18.4	33.1	49.7
700	18.3	32.9	49.3

Notes:

1. Level D allowable stress intensities per Appendix F, Paragraph F-1332.
2. S_m = Stress intensity values per Table 2A of ASME, Section II, Part D.
3. Limits on values are presented in Table 2.2.12.
4. P_m and P_b are defined in Table 3.1.6.

TABLE 3.1.13

DESIGN, LEVELS A AND B: STRESS INTENSITY

Code: ASME NB
Material: Alloy X
Service Conditions: Design, Levels A and B
Item: Stress Intensity

Temp. (Deg.F)	Classification and Numerical Value					
	S_m	P_m†	P_L†	$P_L + P_b$†	$P_L + P_b + Q$††	P_e††
-20 to 100	20.0	20.0	30.0	30.0	60.0	60.0
200	20.0	20.0	30.0	30.0	60.0	60.0
300	20.0	20.0	30.0	30.0	60.0	60.0
400	18.7	18.7	28.1	28.1	56.1	56.1
500	17.5	17.5	26.3	26.3	52.5	52.5
600	16.4	16.4	24.6	24.6	49.2	49.2
650	16.0	16.0	24.0	24.0	48.0	48.0
700	15.6	15.6	23.4	23.4	46.8	46.8
750	15.2	15.2	22.8	22.8	45.6	45.6
800	14.9	14.9	22.4	22.4	44.7	44.7

Notes:

1. S_m = Stress intensity values per Table 2A of ASME II, Part D.
2. Alloy X S_m values are the lowest values for each of the candidate materials at temperature.
3. Stress classification per NB-3220.
4. Limits on values are presented in Table 2.2.10.
5. P_m, P_L, P_b, Q, and P_e are defined in Table 3.1.6.

† Evaluation required for Design condition only.
†† Evaluation required for Levels A, B conditions only. P_e not applicable to vessels.

TABLE 3.1.14

LEVEL D: STRESS INTENSITY

Code: ASME NB
Material: Alloy X
Service Conditions: Level D
Item: Stress Intensity

Temp. (Deg. F)	Classification and Value (ksi)		
	P_m	P_L	$P_L + P_b$
-20 to 100	48.0	72.0	72.0
200	48.0	72.0	72.0
300	46.2	69.3	69.3
400	44.9	67.4	67.4
500	42.0	63.0	63.0
600	39.4	59.1	59.1
650	38.4	57.6	57.6
700	37.4	56.1	56.1
750	36.5	54.8	54.8
800	35.8	53.7	53.7

Notes:

1. Level D stress intensities per ASME NB-3225 and Appendix F, Paragraph F-1331.
2. The average primary shear strength across a section loaded in pure shear may not exceed 0.42 S_u.
3. Limits on values are presented in Table 2.2.10.
4. P_m, P_L, and P_b are defined in Table 3.1.6.

TABLE 3.1.15

DESIGN, LEVELS A AND B: STRESS INTENSITY

Code: ASME NG
Material: Alloy X
Service Conditions: Design, Levels A and B
Item: Stress Intensity

Temp. (Deg. F)	Classification and Value (ksi)				
	S_m	P_m	P_m+P_b	P_m+P_b+Q	P_e
-20 to 100	20.0	20.0	30.0	60.0	60.0
200	20.0	20.0	30.0	60.0	60.0
300	20.0	20.0	30.0	60.0	60.0
400	18.7	18.7	28.1	56.1	56.1
500	17.5	17.5	26.3	52.5	52.5
600	16.4	16.4	24.6	49.2	49.2
650	16.0	16.0	24.0	48.0	48.0
700	15.6	15.6	23.4	46.8	46.8
750	15.2	15.2	22.8	45.6	45.6
800	14.9	14.9	22.4	44.7	44.7

Notes:

1. S_m = Stress intensity values per Table 2A of ASME, Section II, Part D.
2. Alloy X S_m values are the lowest values for each of the candidate materials at temperature.
3. Classifications per NG-3220.
4. Limits on values are presented in Table 2.2.11.
5. P_m, P_b, Q, and P_e are defined in Table 3.1.6.

TABLE 3.1.16

LEVEL D: STRESS INTENSITY

Code: ASME NG
Material: Alloy X
Service Conditions: Level D
Item: Stress Intensity

Temp. (Deg.F)	Classification and Value (ksi)		
	P_m	P_L	$P_L + P_b$
-20 to 100	48.0	72.0	72.0
200	48.0	72.0	72.0
300	46.2	69.3	69.3
400	44.9	67.4	67.4
500	42.0	63.0	63.0
600	39.4	59.1	59.1
650	38.4	57.6	57.6
700	37.4	56.1	56.1
750	36.5	54.8	54.8
800	35.8	53.7	53.7

Notes:

1. Level D stress intensities per ASME NG-3225 and Appendix F, Paragraph F-1331.
2. The average primary shear strength across a section loaded in pure shear may not exceed 0.42 S_u.
3. Limits on values are presented in Table 2.2.11.
4. P_m, P_L, and P_b are defined in Table 3.1.6.

TABLE 3.1.17

REFERENCE TEMPERATURES AND STRESS LIMITS FOR THE VARIOUS LOAD CASES

Load Case I.D.	Material	Reference Temperature†, °F	Stress Intensity Allowables, ksi		
			P_m	$P_L + P_b$	$P_L + P_b + Q$
F1	Alloy X	725	15.4	23.1	46.2
F2	Alloy X	725	15.4	23.1	46.2
F3	Alloy X	725	36.9	55.4	NL
E1	Alloy X	*500*~~500~~	*17.5*~~18.1~~	*26.3*~~7.2~~	*52.5*~~4.3~~
E2	Alloy X	*500*~~450~~	*17.5*~~18.1~~	*26.3*~~7.2~~	*52.5*~~4.3~~
E3	Alloy X	*500*~~450~~	*42.0*~~43.4~~	*63.0*~~5.2~~	NL††
E4	Alloy X	*500*~~450~~	*17.5*~~18.1~~	*26.3*~~7.2~~	*52.5*~~4.3~~
E5	Alloy X	775	36.15	54.25	NL

Note:

1. ~~1.~~ Q, P_m, P_L and P_b are defined in Table 3.1.6.

2. *Reference temperatures for Load Cases E1-E4 are for MPC shell; for MPC lid and MPC baseplate, reference temperatures are 550 deg.F and 400 deg. F, respectively (per Table 2.2.3) and stress intensity allowables should be adjusted accordingly.*

† Values for reference temperatures are taken as the design temperatures (Table 2.2.3)

†† NL: No specified limit in the Code

TABLE 3.1.17 (CONTINUED)

REFERENCE TEMPERATURES AND STRESS LIMITS FOR THE VARIOUS LOAD CASES

Load Case I.D.	Material	Reference Temperature,[†,††] °F	Stress Intensity Allowables, ksi		
			P_m	$P_L + P_b$	$P_L + P_b + Q$
O1	SA203-E	400	17.5	26.3	NL[†††]
	SA350-LF3	400	17.5	26.3	NL
	SA516 Gr. 70 SA515 Gr. 70	400	17.5	26.3	NL
O2	SA203-E	400	41.2	61.7	NL
	SA350-LF3	400	38.6	58.0	NL
	SA516 Gr. 70 SA515 Gr. 70	400	39.1	58.7	NL
O3	SA203-E	400	17.5	26.3	NL
	SA350-LF3	400	17.5	26.3	NL
	SA516 Gr. 70 SA515 Gr. 70	400	17.5	26.3	NL
O4	SA203-E	400	41.2	61.7	NL
	SA350-LF3	400	38.6	58.0	NL
	SA516 Gr. 70 SA515 Gr. 70	400	39.1	58.7	NL

Note:

1. P_m, P_L, P_b, and Q are defined in Table 3.1.6.
2. Load Cases 01 and 03 are for Normal Conditions; therefore the values listed refer to allowable stress, not allowable stress intensity

† Values for reference temperatures are taken as the design temperatures (Table 2.2.3).

†† For storage fire analysis, temperatures are defined by thermal solution

††† NL: No specified limit in the Code

TABLE 3.1.18†

FRACTURE TOUGHNESS TEST REQUIREMENTS

Material	Test Requirement	Test Temperature	Acceptance Criterion
Bolting (A193 B7)	Not required (per NF-2311(b)(13) and Note (e) to Figure NF-2311(b)-1)	-	-
Ferritic steel with nominal section thickness of 5/8" or less	Not required per NF-2311(b)(1)	-	-
SA516 Gr. 70, SA515 Gr. 70 (normalized) (thickness less than or equal to 0.75 inch)	Not required per NF-2311(b)(13) and curve D in Figure NF-2311(b)-1	-	-
SA203, SA516 Gr. 70, SA350-LF2, SA350-LF3 (greater than 0.75" thick)	Per NF-2331	See Note 1. (Also must meet ASME Section IIA requirements)	Table NF-2331(a)-3 or Figure NF-2331(a)-2 (Also must meet ASME Section IIA requirements)
Weld material	Test per NF-2430 for welds when base metal impact testing is required.	-40 deg.F (HI-STORM) 0 deg.F (HI-TRAC) ("NF" parts) -40 deg.F (HI-TRAC)("STH" parts)	Per NF-2330

Note:

1. Required NDT temperature = -40 deg.F for all parts in the HI-STORM 100 Overpack, -40 deg.F for HI-TRAC "STH" parts, and 0 deg.F for HI-TRAC "NF" parts.

3.3 MECHANICAL PROPERTIES OF MATERIALS

Table 2.2.6 provides a comprehensive listing of materials of construction, applicable code, and ITS designation for all functional parts in the HI-STORM 100 System. This section provides the mechanical properties used in the structural evaluation. The properties include yield stress, ultimate stress, modulus of elasticity, Poisson's ratio, weight density, and coefficient of thermal expansion. Values are presented for a range of temperatures which envelopes the maximum and minimum temperatures under all service conditions discussed in the preceding section where structural analysis is performed.

The materials selected for use in the MPC, HI-STORM 100 Overpack, and HI-TRAC transfer cask are presented in the Bills-of-Material in Section 1.5. In this chapter, the materials are divided into two categories, structural and nonstructural. Structural materials are materials that act as load bearing members and are, therefore, significant in the stress evaluations. Materials that do not support mechanical loads are considered nonstructural. For example, the HI-TRAC inner shell is a structural material, while the lead between the inner and outer shell is a nonstructural material. For nonstructural materials, the only property that is used in the structural analysis is weight density. In local deformation analysis, however, such as the study of penetration from a tornado-borne missile, the properties of lead in HI-TRAC and plain concrete in HI-STORM 100, are included.

3.3.1 Structural Materials

3.3.1.1 Alloy X

A hypothetical material termed Alloy X is defined for all MPC structural components. The material properties of Alloy X are the least favorable values from the set of candidate alloys. The purpose of a least favorable material definition is to ensure that all structural analyses are conservative, regardless of the actual MPC material. For example, when evaluating the stresses in the MPC, it is conservative to work with the minimum values for yield strength and ultimate strength. This guarantees that the material used for fabrication of the MPC will be of equal or greater strength than the hypothetical material used in the analysis. In the structural evaluation, the only property for which it is not always conservative to use the set of minimum values is the coefficient of thermal expansion. Two sets of values for the coefficient of thermal expansion are specified, a minimum set and a maximum set. For each analysis, the set of coefficients, minimum or maximum that causes the more severe load on the cask system is used.

Table 3.3.1 lists the numerical values for the material properties of Alloy X versus temperature. These values, taken from the ASME Code, Section II, Part D [3.3.1], are used in all structural analyses. The maximum temperatures in some MPC components may exceed the allowable limits of temperature during short time duration loading operations, off-normal transfer operations, or storage accident events. However, no maximum temperature for Alloy X used at or within the confinement boundary exceeds 1000°F. As shown in ASME Code Case N-47-33 (Class 1 Components in Elevated Temperature Service, 1995 Code Cases, Nuclear Components), the strength properties of austenitic stainless steels do not change due to exposure to 1000°F temperature for up to 10,000 hours. Therefore, there is no significant effect on

mechanical properties of the confinement or basket material during the short time duration loading. A further description of Alloy X, including the materials from which it is derived, is provided in Appendix 1.A.

Two properties of Alloy X that are not included in Table 3.3.1 are weight density and Poisson's ratio. These properties are assumed constant for all structural analyses, regardless of temperature. The values used are shown in the table below.

PROPERTY	VALUE
Weight Density (lb/in^3)	0.290
Poisson's Ratio	0.30

3.3.1.2 Carbon Steel, Low-Alloy and Nickel Alloy Steel

The carbon steels in the HI-STORM 100 System are SA516 Grade 70 and SA515 Grade 70. The nickel alloy and low alloy steels are SA203-E and SA350-LF3, respectively. These steels are not constituents of Alloy X. The material properties of SA516 Grade 70 and SA515 Grade 70 are shown in Tables 3.3.2. The material properties of SA203-E and SA350-LF3 are given in Table 3.3.3.

Two properties of these steels that are not included in Tables 3.3.2 and 3.3.3 are weight density and Poisson's ratio. These properties are assumed constant for all structural analyses. The values used are shown in the table below.

PROPERTY	VALUE
Weight Density (lb/in^3)	0.283
Poisson's Ratio	0.30

3.3.1.3 Bolting Materials

Material properties of the bolting materials used in the HI-STORM 100 System and HI-TRAC lifting trunnions are given in Table 3.3.4. The properties of representative anchor studs used to fasten HI-STORM 100A are listed in Table 1.2.7.

3.3.1.4 Weld Material

All weld materials utilized in the welding of the Code components comply with the provisions of the appropriate ASME subsection (e.g., Subsection NB for the MPC enclosure vessel) and Section IX. All non-code welds will be made using weld procedures that meet Section IX of the ASME Code. The minimum tensile strength of the weld wire and filler material (where applicable) will be equal to or greater than the tensile strength of the base metal listed in the ASME Code.

3.3.2 Nonstructural Materials

3.3.2.1 Solid Neutron Shield

The solid neutron shielding material in the HI-TRAC top lid and transfer lid doors is not considered as a structural member of the HI-STORM 100 System. Its load carrying capacity is neglected in all structural analyses except where such omission would be non-conservative. The only material property of the solid neutron shield that is important to the structural evaluation is weight density ($1.63 g/cm^3$).

3.3.2.2 ~~Boral™~~ *Solid* Neutron Absorber

~~Boral~~*The fuel basket solid neutron absorber* is not ~~a~~ structural members of the HI-STORM 100 System. Its load carrying capacity is neglected in all structural analyses. The only material property of ~~Boral~~ *the solid neutron absorber* that is important to the structural evaluation is weight density. As the MPC fuel baskets can be constructed with ~~Boral~~ *neutron absorber* panels of variable areal density, the weight that produces the most severe cask load is assumed in each analysis (density $2.644 g/cm^3$).

3.3.2.3 Concrete

The primary function of the plain concrete in the HI-STORM storage overpack is shielding. Concrete in the HI-STORM 100 Overpack is not considered as a structural member, except to withstand compressive, bearing, and penetrant loads. While concrete is not considered a structural member, its mechanical behavior must be quantified to determine the stresses in the structural members (steel shells surrounding it) under accident conditions. Table 3.3.5 provides the concrete mechanical properties. Allowable, bearing strength in concrete for normal loading conditions is calculated in accordance with ACI 318.1 [3.3.2]. The procedure specified in ASTM C-39 is utilized to verify that the assumed compressive strength will be realized in the actual in-situ pours. In addition, although the concrete is not reinforced (since the absence of reinforcement does not degrade the compressive strength), the requirements of ACI-349 [3.3.3] are imposed to insure the suitability of the concrete mix. Appendix 1.D provides additional information on the requirements on plain concrete for use in HI-STORM 100 storage overpack.

3.3.2.4 Lead

Lead is not considered as a structural member of the HI-STORM 100 System. Its load carrying capacity is neglected in all structural analysis, except in the analysis of a tornado missile strike where it acts as a missile barrier. Applicable mechanical properties of lead are provided in Table 3.3.5.

3.3.2.5 Aluminum Heat Conduction Elements

Optional aluminum heat conduction elements may be located between the fuel basket and MPC vessel. They are optional thin flexible elements whose sole function is to transmit heat as described

in Chapter 4. They are not credited with any structural load capacity and are shaped to provide negligible resistance to basket thermal expansion. The total weight of the aluminum inserts is less than 1,000 lb. per MPC.

TABLE 3.3.1
ALLOY X MATERIAL PROPERTIES

Temp. (Deg. F)	Alloy X				
	S_y	S_u	α_{min}	α_{max}	E
-40	30.0	75.0	8.54	8.55	28.82
100	30.0	75.0	8.54	8.55	28.14
150	27.5	73.0	8.64	8.67	27.87
200	25.0	71.0	8.76	8.79	27.6
250	23.75	68.5	8.88	8.9	27.3
300	22.5	66.0	8.97	9.0	27.0
350	21.6	65.2	9.10	9.11	26.75
400	20.7	64.4	9.19	9.21	26.5
450	20.05	64.0	9.28	9.32	26.15
500	19.4	63.5	9.37	9.42	25.8
550	18.8	63.3	9.45	9.50	25.55
600	18.2	63.1	9.53	9.6	25.3
650	17.8	62.8	9.61	9.69	25.05
700	17.3	62.5	9.69	9.76	24.8
750	16.9	62.2	9.76	9.81	24.45
800	16.6	61.7	9.82	9.90	24.1

Definitions:

S_y = Yield Stress (ksi)
α = Mean Coefficient of thermal expansion (in./in. per degree F x 10^{-6})
S_u = Ultimate Stress (ksi)
E = Young's Modulus (psi x 10^6)

Notes:

1. Source for S_y values is Table Y-1 of [3.3.1].
2. Source for S_u values is Table U of [3.3.1].
3. Source for α_{min} and α_{max} values is Table TE-1 of [3.3.1].
4. Source for E values is material group G in Table TM-1 of [3.3.1].

TABLE 3.3.2
SA516 AND SA515, GRADE 70 MATERIAL PROPERTIES

Temp. (Deg.F)	SA516 and SA515, Grade 70			
	S_y	S_u	α	E
-40	38.0	70.0	—	29.95
100	38.0	70.0	5.53 (5.73)	29.34
150	36.3	70.0	5.71 (5.91)	29.1
200	34.6	70.0	5.89 (6.09)	28.8
250	34.15	70.0	6.09 (6.27)	28.6
300	33.7	70.0	6.26 (6.43)	28.3
350	33.15	70.0	6.43 (6.59)	28.0
400	32.6	70.0	6.61 (6.74)	27.7
450	31.65	70.0	6.77 (6.89)	27.5
500	30.7	70.0	6.91 (7.06)	27.3
550	29.4	70.0	7.06 (7.18)	27.0
600	28.1	70.0	7.17 (7.28)	26.7
650	27.6	70.0	7.30 (7.40)	26.1
700	27.4	70.0	7.41 (7.51)	25.5
750	26.5	69.3	7.50 (7.61)	24.85

Definitions:

S_y = Yield Stress (ksi)
α = Mean Coefficient of thermal expansion (in./in. per degree F x 10^{-6})
S_u = Ultimate Stress (ksi)
E = Young's Modulus (psi x 10^6)

Notes:
1. Source for S_y values is Table Y-1 of [3.3.1].
2. Source for S_u values is Table U of [3.3.1].
3. Source for α values is material group C in Table TE-1 of [3.3.1].
4. Source for E values is "Carbon steels with C less than or equal to 0.30%" in Table TM-1 of [3.3.1].
5. Values for SA515 are given in parentheses where different from SA516.

TABLE 3.3.3
SA350-LF3 AND SA203-E MATERIAL PROPERTIES

Temp. (Deg.F)	SA350-LF3 and LF2			SA350-LF3/SA203-E		SA203-E		
	S_m	S_y	S_u	E	α	S_m	S_y	S_u
-20	23.3	37.5 (36.0)	70.0	28.2	---	23.3	40.0	70.0
100	23.3	37.5 (36.0)	70.0	27.6	6.27	23.3	40.0	70.0
200	22.8 (21.9)	34.2 (32.9)	68.5 (70.0)	27.1	6.54	23.3	36.5	70.0
300	22.2 (21.3)	33.2 (31.9)	66.7 (70.0)	26.7	6.78	23.3	35.4	70.0
400	21.5 (20.6)	32.2 (30.9)	64.6 (70.0)	26.1	6.98	22.9	34.3	68.8
500	20.2 (19.4)	30.3 (29.2)	60.7 (70.0)	25.7	7.16	21.6	32.4	64.9
600	18.5 (17.8)	-(26.6)	-(70.0)	-	-	-	-	-
700	16.8 (17.3)	-(26.0)	-(70.0)	-	-	-	-	-

Definitions:

S_m = Design Stress Intensity (ksi)
S_y = Yield Stress (ksi)
S_u = Ultimate Stress (ksi)
α = Coefficient of Thermal Expansion (in./in. per degree F x 10^{-6})
E = Young's Modulus (psi x 10^6)

Notes:

1. Source for S_m values is ASME Code.
2. Source for S_y values is ASME Code.
3. Source for S_u values is ratioing S_m values.
4. Source for α values is material group E in Table TE-1 of [3.3.1].
5. Source for E values is material group B in Table TM-1 of [3.3.1].
6. Values for LF2 are given in parentheses where different from LF3

TABLE 3.3.4
BOLTING MATERIAL PROPERTIES

Temp. (Deg.F)	SB637-N07718				
	S_y	S_u	E	α	S_m
-100	150.0	185.0	29.9	—	50.0
-20	150.0	185.0	—	—	50.0
70	150.0	185.0	29.0	7.05	50.0
100	150.0	185.0	—	7.08	50.0
200	144.0	177.6	28.3	7.22	48.0
300	140.7	173.5	27.8	7.33	46.9
400	138.3	170.6	27.6	7.45	46.1
500	136.8	168.7	27.1	7.57	45.6
600	135.3	166.9	26.8	7.67	45.1
SA193 Grade B7 (2.5 to 4 inches diameter)					
Temp. (Deg. F)	S_y	S_u	E	α	-
100	95.0	115.00	-	5.73	-
200	88.5	107.13	-	6.09	-
300	85.1	103.02	-	6.43	-
400	82.3	99.63	-	5.9	-

Definitions:

S_m = Design stress intensity (ksi)
S_y = Yield Stress (ksi)
α = Mean Coefficient of thermal expansion (in./in. per degree F x 10^{-6})
S_u = Ultimate Stress (ksi)
E = Young's Modulus (psi x 10^6)

Notes:

1. Source for S_m values is Table 4 of [3.3.1].
2. Source for S_y values is ratioing design stress intensity values.
3. Source for S_u values is ratioing design stress intensity values.
4. Source for α values is Tables TE-1 and TE-4 of [3.3.1], as applicable.
5. Source for E values is Table TM-1 of [3.3.1].
6. Source for S_y values for SA193 bolts is Table Y-1 of [3.3.1]; source for S_u is by ratioing S_y.

TABLE 3.3.4 (CONTINUED)
BOLTING MATERIAL PROPERTIES

SA193 Grade B7 (less than 2.5 inch diameter)					
Temp. (Deg.F)	S_y	S_u	E	α	-
100	105.0	125.00	-	5.73	-
200	98.0	116.67	-	6.09	-
300	94.1	112.02	-	6.43	
400	91.5	108.93	-	6.74	-
Temp. (Deg.F)	SA705-630/SA564-630 (Age Hardened at 1075 degrees F)				
	S_y	S_u	E	α	S_m
200	115.6	145.0	28.5	5.9	—
300	110.7	145.0	27.9	5.9	—
400	106.9	145.0	27.3	5.91	—
SA705-630/SA564-630 (Age Hardened at 1150 degrees F)					
200	97.1	135.0	28.5	5.9	—
300	93.0	135.0	27.9	5.9	—

Definitions:

S_m = Design stress intensity (ksi)
S_y = Yield Stress (ksi)
α = Mean Coefficient of thermal expansion (in./in. per degree F x 10^{-6})
S_u = Ultimate Stress (ksi)
E = Young's Modulus (psi x 10^6)

Notes:
1. Source for S_y values is Table Y-1 of [3.3.1].
2. Source for S_u values is Table U of [3.3.1].
3. Source for α values is Tables TE-1 and TE-4 of [3.3.1], as applicable.
4. Source for E values is Table TM-1 of [3.3.1].

TABLE 3.3.5
CONCRETE AND LEAD MECHANICAL PROPERTIES

PROPERTY	VALUE					
CONCRETE:						
Compressive Strength (psi)	See Table 1.D.1					
Nominal Density (lb/ft³)	See Table 1.D.1					
Allowable Bearing Stress (psi)	1,823†					
Allowable Axial Compression (psi)	1,266†					
Allowable Flexure, extreme fiber tension (psi)	187†,††					
Allowable Flexure, extreme fiber compression (psi)	2,145†					
Mean Coefficient of Thermal Expansion (in/in/deg.F)	5.5E-06					
Modulus of Elasticity (psi)	57,000 (compressive strength (psi))$^{1/2}$					
LEAD:	-40°F	-20°F	70°F	200°F	300°F	600°F
Yield Strength (psi)	700	680	640	490	380	20
Modulus of Elasticity (ksi)	2.4E+3	2.4E+3	2.3E+3	2.0E+3	1.9E+3	1.5E+3
Coefficient of Thermal Expansion (in/in/deg.F)	15.6E-6	15.7E-6	16.1E-6	16.6E-6	17.2E-6	20.2E-6
Poisson's Ratio	0.40					
Density (lb/cubic ft.)	708					

Notes:
1. Concrete allowable stress values based on ACI 318.1.
2. Lead properties are from [3.3.5].

† Values listed correspond to concrete compressive stress = 4,000 psi
†† No credit for tensile strength of concrete is taken in the calculations

3.4 GENERAL STANDARDS FOR CASKS

3.4.1 Chemical and Galvanic Reactions

In this section, it is shown that there is no credible mechanism for significant chemical or galvanic reactions in the HI-STORM 100 System during long-term storage operations (including HI-STORM 100S and HI-STORM 100A).

The MPC, which is filled with helium, provides a nonaqueous and inert environment. Insofar as corrosion is a long-term time-dependent phenomenon, the inert gas environment in the MPC precludes the incidence of corrosion during storage on the ISFSI. Furthermore, the only dissimilar material groups in the MPC are: (1) *the neutron absorber material* ~~Boral™~~-and stainless steel and (2) aluminum and stainless steel. *Neutron absorber materials* ~~Boral~~-and stainless steel*s* have been used in close proximity in wet storage for over 30 years. Many spent fuel pools at nuclear plants contain fuel racks, which are fabricated from *neutron absorber materials* ~~Boral~~-and stainless steel materials, with geometries similar to the MPC. Not one case of chemical or galvanic degradation has been found in fuel racks built by Holtec. This experience provides a sound basis to conclude that corrosion will not occur in these materials. Additionally, the aluminum conduction inserts and stainless steel basket are very close on the galvanic series chart. Aluminum, like other metals of its genre (e.g., titanium and magnesium) rapidly passivates in an aqueous environment, leading to a thin ceramic (Al_2O_3) barrier, which renders the material essentially inert and corrosion-free over long periods of application. The physical properties of the material, e.g., thermal expansion coefficient, diffusivity, and thermal conductivity, are essentially unaltered by the exposure of the aluminum metal stock to an aqueous environment.

~~In order to minimize the incidence of aluminum water reaction inside the MPC during fuel loading operation (when the MPC is flooded with pool water) all aluminum surfaces are pre-passivated or anodized before installation of Boral or optional aluminum heat conduction inserts in the MPC. Because the aluminum-water reaction cannot be completely eliminated by pre-passivation and the aluminum material in the MPC will be under varying hydrostatic pressure levels (up to approximately 40 feet of water pressure during fuel loading or unloading in the spent fuel pool, and up to approximately 15 feet during lid welding or cutting), continued generation of limited quantities of hydrogen is possible. Pre-passivation has been shown by analysis to preclude the accumulation of combustible quantities of gas under the MPC lid during welding or cutting. However, as a defense-in-depth measure to preclude the potential for ignition during the conduct of these activities, the operating procedures in Chapter 8 include a requirement for periodic combustible gas monitoring and recommended actions to evacuate, or purge the space beneath the MPC lid with an inert gas prior to and during lid welding and cutting activities.~~

The aluminum in the optional heat conduction elements will quickly passivate in air and in water to form a protective oxide layer that prevents any significant hydrogen production during MPC cask loading and unloading operations. The aluminum in the neutron absorber material (i.e., Boral), particularly in the core area, will also react with the water to generate hydrogen gas. The exact rate of generation and total amount of hydrogen generated is a function of a number of variables (see Section 1.2.1.3.1.1) and cannot be predicted with any certainty. Therefore, to preclude the potential for hydrogen ignition during lid welding or cutting, the operating procedures in Chapter 8 require

monitoring for combustible gas and either exhausting or purging the space beneath the MPC lid with an inert gas during these activities. Once the MPC cavity is drained, dried, and backfilled with helium, the source of the hydrogen gas (the aluminum-water reaction) is eliminated.

The HI-STORM 100 storage overpack and the HI-TRAC transfer cask each combine low alloy and nickel alloy steels, carbon steels, neutron and gamma shielding materials, and bolting materials. All of these materials have a long history of nongalvanic behavior within close proximity of each other. The internal and external steel surfaces of each of the storage overpacks are sandblasted and coated to preclude surface oxidation. The HI-TRAC coating does not chemically react with borated water. Therefore, chemical or galvanic reactions involving the storage overpack materials are highly unlikely and are not expected.

In accordance with NRC Bulletin 96-04 [3.4.7], a review of the potential for chemical, galvanic, or other reactions among the materials of the HI-STORM 100 System, its contents and the operating environments, which may produce adverse reactions, has been performed. Table 3.4.2 provides a listing of the materials of fabrication for the HI-STORM 100 System and evaluates the performance of the material in the expected operating environments during short-term loading/unloading operations and long-term storage operations. As a result of this review, no operations were identified which could produce adverse reactions beyond those conditions already analyzed in this FSAR.

3.4.2 Positive Closure

There are no quick-connect/disconnect ports in the confinement boundary of the HI-STORM 100 System. The only access to the MPC is through the storage overpack lid, which weighs over 23,000 pounds (see Table 3.2.1). The lid is fastened to the storage overpack with large bolts. Inadvertent opening of the storage overpack is not feasible; opening a storage overpack requires mobilization of special tools and heavy-load lifting equipment.

3.4.3 Lifting Devices

As required by Reg. Guide 3.61, in this subsection, analyses for all lifting operations applicable to the deployment of a member of the HI-STORM 100 family are presented to demonstrate compliance with applicable codes and standards.

The HI-STORM 100 System has the following components and devices participating in lifting operations: lifting trunnions located at the top of the HI-TRAC transfer cask, lid lifting connections for the HI-STORM 100 lid and for other lids in the HI-TRAC transfer cask, connections for lifting and carrying a loaded HI-STORM 100 vertically, and lifting connections for the loaded MPC.

Analyses of HI-STORM 100 storage overpack and HI-TRAC transfer cask lifting devices are *reported* ~~provided~~ in this submittal. Analyses of MPC lifting operations are presented in the HI-STAR 100 FSAR (Docket Number 72-1008, Subsection 3.4.3) and are also applicable here.

The evaluation of the adequacy of the lifting devices entails careful consideration of the applied loading and associated stress limits. The load combination D+H, where H is the "handling load", is

the generic case for all lifting adequacy assessments. The term D denotes the dead load. Quite obviously, D must be taken as the bounding value of the dead load of the component being lifted. In all lifting analyses considered in this document, the handling load H is assumed to be 0.15D. In other words, the inertia amplifier during the lifting operation is assumed to be equal to 0.15g. This value is consistent with the guidelines of the Crane Manufacturer's Association of America (CMAA), Specification No. 70, 1988, Section 3.3, which stipulates a dynamic factor equal to 0.15 for slowly executed lifts. Thus, the "apparent dead load" of the component for stress analysis purposes is $D^* = 1.15D$. Unless otherwise stated, all lifting analyses in this report use the "apparent dead load", D^*, as the lifted load.

Analysis methodology to evaluate the adequacy of the lifting device may be analytical or numerical. For the analysis of the trunnion, an accepted conservative technique for computing the bending stress is to assume that the lifting force is applied at the tip of the trunnion "cantilever" and that the stress state is fully developed at the base of the cantilever. This conservative technique, recommended in NUREG-1536, is applied to all trunnion analyses presented in this SAR and has also been applied to the trunnions analyzed in the HI-STAR 100 FSAR.

In general, the stress analysis to establish safety pursuant to NUREG-0612, Regulatory Guide 3.61, and the ASME Code, requires evaluation of three discrete zones which may be referred to as (i) the trunnion, (ii) the trunnion/component interface, hereinafter referred to as Region A, and (iii) the rest of the component, specifically the stressed metal zone adjacent to Region A, herein referred to as Region B. During this discussion, the term "trunnion" applies to any device used for lifting (i.e., trunnions, lift bolts, etc.)

Stress limits germane to each of the above three areas are discussed below:

i. Trunnion: NUREG-0612 requires that under the "apparent dead load", D^*, the maximum primary stress in the trunnion be less than 10% of the trunnion material ultimate strength and less than 1/6th of the trunnion material yield strength. Because of the materials of construction selected for trunnions in all HI-STORM 100 System components, the ultimate strength-based limit is more restrictive in every case. Therefore, all trunnion safety factors reported in this document pertain to the ultimate strength-based limit.

ii. Region A: Trunnion/Component Interface: Stresses in Region A must meet ASME Code Level A limits under applied load D*. Additionally, Regulatory Guide 3.61 requires that the primary stress under 3D*, associated with the cross-section, be less than the yield strength of the applicable material. In cases involving section bending, the developed section moment may be compared against the plastic moment at yield. The circumferential extent of the characteristic cross-section at the trunnion/component interface is calculated based on definitions from ASME Section III, Subsection NB and is defined in terms of the shell thickness and radius of curvature at the connection to the trunnion block. By virtue of the construction geometry, only the mean shell stress is categorized as "primary" for this evaluation.

iii. Region B: Typically, the stresses in the component in the vicinity of the trunnion/component interface are higher than elsewhere. However, exceptional situations exist. For example, when lifting a loaded MPC, the MPC baseplate, which supports the entire weight of the fuel and the fuel basket, is a candidate location for high stress even though it is far removed from the lifting location (which is located in the top lid).

Even though the baseplate in the MPC would normally belong to the Region B category, for conservatism it was considered as Region A in the HI-STAR 100 SAR. The pool lid and the transfer lid of the HI-TRAC transfer cask also fall into this dual category. In general, however, all locations of high stress in the component under D^* must also be checked for compliance with ASME Code Level A stress limits.

Unless explicitly stated otherwise, all analyses of lifting operations presented in this report follow the load definition and allowable stress provisions of the foregoing. Consistent with the practice adopted throughout this chapter, results are presented in dimensionless form, as safety factors, defined as

$$\text{Safety Factor, } \beta = \frac{\text{Allowable Stress in the Region Considered}}{\text{Computed Maximum Stress in the Region}}$$

The safety factor, defined in the manner of the above, is the added margin over what is mandated by the applicable code (NUREG-0612 or Regulatory Guide 3.61).

In the following subsections, we briefly describe each of the lifting analyses performed to demonstrate compliance with regulations. Summary results are presented for each of the analyses.

It is recognized that stresses in Region A are subject to two distinct criteria, namely Level A stress limits under D* and yield strength at 3D*. We will identify the applicable criteria in the summary tables, under the column heading "Item", using the "3D*" identifier.

All of the lifting analyses reported on in this Subsection are designated as Load Case 01 in Table 3.1.5.

3.4.3.1 125 Ton HI-TRAC Lifting Analysis - Trunnions

The lifting device in the HI-TRAC 125 cask is presented in Holtec Drawing 1880 (Section 1.5 herein). The two lifting trunnions for HI-TRAC are spaced at 180 degrees. The trunnions are designed for a two-point lift in accordance with the aforementioned NUREG-0612 criteria. Figure 3.4.21 shows the overall lifting configuration. ~~Appendix 3.E contains the lifting trunnion stress analysis for the HI-TRAC 125. Figures within that appendix provide details to support the analysis.~~ *The lifting analysis demonstrates* ~~It is demonstrated in Appendix 3.E~~ that the stresses in the trunnions, computed using the conservative methodology described previously, comply with NUREG-0612 provisions.

Specifically, the following results are obtained:

HI-TRAC 125 Lifting Trunnions†		
	Value (ksi)	Safety Factor
Bending stress	16.98	1.07
Shear stress	7.23	1.5

† The lifted load is 245,000 lb. (a value that bounds the actual lifted weight from the pool after the lift yoke weight is eliminated per Table 3.2.4).

Note that the safety factor presented in the previous table represents the additional margin beyond the mandated limit of 6 on yield strength and 10 on tensile strength. The results above are also valid for the HI-TRAC 125D since the dimensions used as input ~~in Appendix 3.E~~, as well as the bounding load, are common to both the HI-TRAC 125 and 125D transfer casks.

3.4.3.2 125 Ton HI-TRAC Lifting - Trunnion Lifting Block Welds, Bearing, and Thread Shear Stress (Region A)

~~Appendix 3.E contains calculations that analyze~~ *As part of the Region A evaluation,* the weld group connecting the lifting trunnion block to the inner and outer shells, and to the HI-TRAC top flange, *is analyzed.* Conservative analyses are also performed to determine safety factors for bearing stress and for thread shear stress at the interface between the trunnion and the trunnion block. The following results are obtained for the HI-TRAC 125 and 125D transfer casks:

125 Ton HI-TRAC Lifting Trunnion Block (Region A Evaluation)			
Item	Value (ksi)	Allowable (ksi)	Safety Factor
Trunnion Block Bearing Stress	5.94	11.4	1.92
Trunnion Block Thread Shear Stress	5.19	6.84	1.32
Weld Shear Stress (3D*)	4.40†	11.4	2.59

† No quality factor has been applied to the weld group. (Subsection NF or NUREG-0612 do not apply penalty factors to the structural welds).

3.4.3.3 125 Ton HI-TRAC Lifting - Structure near Trunnion (Region B/Region A)

~~Appendix 3.AE contains results of a finite element analysis of the region in the HI-TRAC 125 structure adjacent to the lifting trunnions. Appendix 3.AE shows that the primary stresses in the HI-TRAC 125 structure comply with the Level A stress limits for Subsection NF structures.~~

A three-dimensional elastic model of the HI-TRAC 125 metal components is analyzed using the ANSYS finite element code. ~~Figure 3.AE.1 shows details of the one-quarter symmetry model using a color-coding to identify the various modeled parts.~~ The structural model includes, in addition to the trunnion and the trunnion block, a portion of the inner and outer HI-TRAC shells and the HI-TRAC top flange. ~~In Appendix 3.AE, s~~Stress results over the characteristic interface section are summarized and compared with allowable strength limits per ASME Section III, Subsection NF, and per Regulatory Guide 3.61. *The results show that the primary stresses in the HI-TRAC 125 structure comply with the Level A stress limits for Subsection NF structures.*

The results from the analysis ~~in Appendix 3.AE~~ are summarized below:

HI-TRAC 125 Trunnion Region (Regions A and B)			
Item	**Value (ksi)**	**Allowable (ksi)**	**Safety Factor**
Membrane Stress	6.19	17.5	2.83
Membrane plus Bending Stress	8.19	26.25	3.2
Membrane Stress (3D*)	18.6	34.6	1.86

The results above are also valid for the HI-TRAC 125D since the dimensions and the configuration of the inner shell, outer shell, top flange, and the trunnion block are the same in both the HI-TRAC 125 and 125D transfer casks.

3.4.3.4 100 Ton HI-TRAC Lifting Analysis

The lifting trunnions and the trunnion blocks for the 100 Ton HI-TRAC are identical to the trunnions analyzed ~~in Appendices 3.E and 3.AE~~ for the 125 Ton HI-TRAC. However, the outer shell geometry (outer diameter) is different. A calculation performed in the spirit of strength-of-materials provides justification that, despite the difference in local structure at the attachment points, thestresses in the body of the HI-TRAC 100 Ton unit meet the allowables set forth in Subsection 3.1.2.2.

Figure 3.4.10 illustrates the differences in geometry, loads, and trunnion moment arms between the body of the 125-Ton HI-TRAC and the body of the 100-Ton HI-TRAC. It is reasonable to assume that the level of stress in the 100 Ton HI-TRAC body, in the immediate vicinity of the interface (Section X-X in Figure 3.4.10), is proportional to the applied force and the bending moment applied.

In *the figure*~~what follows~~, the subscripts 1 and 0 refer to 100 Ton and 125 Ton casks, respectively. Figure 3.4.10 shows the location of the area centroid (with respect to the outer surface) and the loads and moment arms associated with each construction. Conservatively, neglecting all other interfaces between the top of the trunnion block and the top flange and between the sides of the trunnion block and the shells, equilibrium is maintained by developing a force and a moment in the section comprised of the two shell segments interfacing with the base of the trunnion block.

The most limiting stress state is in the outer shell at the trunnion block base interface. The stress level in the outer shell at Section X-X is proportional to P/A + Mc/I. Evaluating the stress for a unit width of section permits an estimate of the stress state in the HI-TRAC 100 outer shell if the corresponding stress state in the HI-TRAC 125 is known (the only changes are the applied load, the moment arm and the geometry). Using the geometry shown in Figure 3.4.10 gives the result as:

Stress (HI-TRAC 100 outer shell) = 1.236 x Stress (HI-TRAC 125 outer shell)

The tabular results in the previous subsection can be adjusted accordingly and are reported below:

100 Ton HI-TRAC Near Trunnion (Region A and Region B)	
Item	**Safety Factor**
Membrane Stress	2.29
Membrane plus Bending Stress	2.59
Membrane Stress (3D*)	1.50

3.4.3.5 HI-STORM 100 Lifting Analyses

There are two vertical lifting scenarios for the HI-STORM 100 storage overpack carrying a fully loaded MPC. Figure 3.4.17 shows a schematic of these lifting scenarios. Both lifting scenarios are examined ~~in Appendix 3.D~~ using finite element models that focus on the local regions near the lift points. The analysis ~~in Appendix 3.D~~ is based on the geometry of the HI-STORM 100; ~~T~~*t*he alterations to the lid and to the length of the overpack barrel to configure the HI-STORM 100S have no effect on the conclusions reached in the area of the baseplate. Therefore, there is no separate analysis for ~~the analysis of~~ the baseplate, inboard of the inner shell, for the HI-STORM 100S as the results are identical to or bounded by the results *presented here*~~documented in Appendix 3.D~~. Since the upper portion of the HI-STORM 100S, the HI-STORM 100S lid, and the radial ribs and anchor block have a different configuration than the HI-STORM 100, separate calculations have been performed for these areas of the HI-STORM 100S.

Scenario #1 considers a "bottom lift" where the fully loaded HI-STORM 100 storage overpack is lifted vertically by four synchronized hydraulic jacks each positioned at one of the four inlet air vents. This lift allows for installation and removal of "air pads" which may be used for horizontal positioning of HI-STORM 100 at the ISFSI pad.

Scenario #2, labeled the "top lift scenario" considers the lifting of a fully loaded HI-STORM 100 vertically through the four lifting lugs located at the top end.

No structural credit is assumed for the HI-STORM concrete in either of the two lifting scenarios except as a vehicle to transfer compressive loads.

For the bottom lift, a three-dimensional one-quarter symmetry finite element model of the bottom region of the HI-STORM 100 storage overpack is constructed. The model includes the inner shell, the outer shell, the baseplate, the inlet vent side and top plates, and the radial plates connecting the inner and outer shells. ~~Further details of the model are provided in Appendix 3.D. The key results are contained in Figure 3.D.3 that shows the stress intensity distribution on the HI-STORM 100 storage overpack.~~

For the analysis of the "top lift" scenario, a three-dimensional 1/8-symmetry finite element model of the top segment of HI-STORM 100 storage overpack is constructed. The metal HI-STORM 100 material is modeled (shells, radial plates, lifting block, ribs, vent plates, etc.) using shell or solid elements. ~~Color-coded views of the model are given in Figure 3.D.2.~~ Lumped weights are used to ensure that portions of the structure not modeled are, in fact, properly represented as part of a lifted load. The model is supported vertically at the lifting lug. *The results are reported in tabular form at the end of this subsection.*

~~Figures 3.D.4(a) through 3.D.4(c) and Figure 3.D.5(a) through 3.D.5(c) show the stress intensity results under the lifted load and in the baseplate region, respectively.~~

To provide an alternate calculation to demonstrate that the bolt anchor blocks are adequate, we compute the average normal stress in the net metal area of the block under three times the lifted load. Further conservatism is introduced by including an additional 15% for dynamic amplification, i.e., the total load is equal to 3D*.

The average normal load in one bolt anchor block is

Load = 3 x 1.15 x 360,000 lb./4 = 310,500 lb. (Weight comes from Table 3.2.1)

The net area of the bolt anchor block is

Area = 5" x 5" – (3.14159/4)/4 x (3.25" x 3.25") = 16.70 sq. inch (Dimensions from BM-1575)

Therefore, the safety factor (yield strength at 350 degrees F/calculated stress from Table 3.3.3) is

SF = 32,700 psi/ (Load/Area) = 1.76

~~Appendix 3.D also examines t~~The shear stress in the threads of the lifting block *is also examined.* This analysis considers a cylindrical area of material under an axial load resisting the load by shearing action. The diameter of the area is the basic pitch diameter of the threads, and the length of the cylinder is the thread engagement length.

The analysis ~~Appendix 3.D~~ also examines the capacity of major welds in the load path and the compression capacity of the pedestal shield and pedestal shield shell.

The table below summarizes key results obtained from the analyses *described above* ~~reported in detail in Appendix 3.D~~ for the HI-STORM 100.

HI-STORM 100 Top and Bottom Lifting Analyses†‡			
Item	Value (ksi)	Allowable (ksi)	Safety Factor
Primary Membrane plus Bending - Bottom Lift - Inlet Vent Plates - Region B	8.0	26.3	3.28
Primary Membrane - Top Lift - Radial Rib Under Lifting Block - Region B	6.67	17.5	2.63
Primary Membrane plus Bending – Top Lift - Baseplate – Region B	7.0	26.3	3.75
Primary Membrane Region A (3D*)	19.97	33.15	1.66
Primary Membrane plus Bending Region A (3D*)	24.02	33.15	1.38
Lifting Block Threads - Top Lift –Region A (3D*)	10.67	19.62	1.84
Lifting Stud - Top Lift –Region A (3D*)	43.733	108.8	2.49
Welds – Anchor Block-to-Radial Rib Region B	5.74	19.695	3.43
Welds – Anchor Block-to-Radial Rib Region A (3D*)	17.21	19.62	1.14
Welds – Radial Rib-to-Inner and Outer Shells Region B	5.83	21.00	3.60
Welds – Radial Rib-to-Inner and Outer Shells Region A (3D*)	17.49	19.89	1.13
Weld – Baseplate-to Inner Shell Region A (3D*)	1.59	19.89	12.48
Weld – Baseplate-to-Inlet Vent Region A (3D*)	14.89	19.89	1.33
Pedestal Shield Concrete (3D*)	0.096	1.266	13.19
Pedestal Shell (3D*)	3.269	33.15	10.14

† Regions A and B are defined at beginning of Subsection 3.4.3

‡ The lifted load is 360000 lb. and an inertia amplification of 15% is included.

It is concluded that all structural integrity requirements are met during a lift of the HI-STORM 100 storage overpack under either the top lift or the bottom lift scenario. All factors of safety are greater than 1.0 using criteria from the ASME Code Section III, Subsection NF for Class 3 plate and shell supports and from USNRC Regulatory Guide 3.61.

Similar calculations have been performed for the HI-STORM 100S where differences in configuration warrant. The results are summarized in the table below:

HI-STORM 100S Top and Bottom Lifting Analyses†‡			
Item	Value (ksi)	Allowable (ksi)	Safety Factor
Primary Membrane plus Bending - Bottom Lift - Inlet Vent Plates - Region A (3D*)	9.824	33.15	3.374
Lifting Block Threads - Top Lift –Region A (3D*)	5.540	18.840	3.40
Lifting Stud - Top Lift –Region A (3D*)	49.199	83.7	1.70
Welds – Anchor Block-to-Radial Rib Region B	5.483	21.0	3.83
Welds – Anchor Block-to-Radial Rib Region A (3D*)	16.469	18.84	1.144
Welds – Radial Rib-to-Inner and Outer Shells Region B	5.56	21.00	3.77
Welds – Radial Rib-to-Inner and Outer Shells Region A (3D*)	16.69	19.89	1.19
Weld – Baseplate-to Inner Shell Region A (3D*)	1,592	19.89	12.49
Weld – Baseplate-to-Inlet Vent Region A (3D*)	8.982	19.89	2.214
Radial Rib Membrane Stress – Bottom Lift Region A (3D*)	10.58	33.15	3.132
Pedestal Shield Concrete (3D*)	0.095	1.535	16.17
Pedestal Shell (3D*)	3.235	33.15	10.24

† Regions A and B are defined at beginning of Subsection 3.4.3

‡ The lifted load is 405,000 lb. and an inertia amplification of 15% is included. The increased weight (over the longer HI-STORM 100) comes from conservatively assuming an increase in concrete weight density in the HI-STORM 100S overpack and lid to provide additional safety margin.

It is concluded that all structural integrity requirements are met during a lift of the HI-STORM 100 and HI-STORM 100S storage overpacks under either the top lift or the bottom lift scenario. All factors of safety are greater than 1.0 using criteria from the ASME Code Section III, Subsection NF for Class 3 plate and shell supports and from USNRC Regulatory Guide 3.61.

3.4.3.6 MPC Lifting Analysis

The MPC lifting analyses are found in the HI-STAR 100 FSAR (Docket-72-1008). Some results of the analyses in that document (Appendices 3.K, 3.E, 3.I and 3.Y Docket-72-1008) are summarized here for completeness.

Summary of MPC Lifting Analyses			
Item	Thread Engagement Safety Factor (NUREG-0612)	Region A Safety Factor	Region B Safety Factor†
MPC	1.08	1.09	1.56

† The factor reported here is for the MPC baseplate considered under a load equal to 3D*.

3.4.3.7 Miscellaneous Lid Lifting Analyses

~~Appendix 3.AC contains analyses of lifting attachments for various lid lifting operations.~~

The HI-STORM 100 lid lifting analysis is performed to ensure that the threaded connections provided in the lid are adequately sized. The lifting analysis of the top lid is based on a vertical orientation of loading from an attached lifting device. The top lid of the HI-STORM 100 storage overpack is lifted using four lugs that are threaded into holes in the top plate of the lid (Holtec Drawing 1495, Section 1.5). It is noted that failure of the lid attachment would not result in any event of safety consequence because a free-falling HI-STORM 100 lid cannot strike a stored MPC (due to its size and orientation). Operational limits on the carry height of the HI-STORM 100 lid above the top of the storage overpack containing a loaded MPC preclude any significant lid rotation out of the horizontal plane in the event of a handling accident. Therefore, contact between the top of the MPC and the edge of a dropped lid due to uncontrolled lowering of the lid during the lid placement operation is judged to be a non-credible scenario. ~~Appendix 3.AC provides an example of a commercially available item that has the appropriate safety factors to serve as a lifting device for the HI-STORM 100 overpack top lid.~~ Except for location of the lift points, the lifting device for the HI-STORM 100S lid is the same as for the regular HI-STORM 100 lid. Since the lid weight for the HI-STORM 100S bounds the HI-STORM 100, the calculated safety factors for the lifting of the HI-STORM 100S lid are reduced and are also reported in the summary table below.

In addition to the HI-STORM 100 top lid lifting analysis, ~~Appendix 3.AC also contains details of~~ the strength qualification of *the* ~~other~~ lid lifting holes, and associated lid lifting devices, *for the HI-TRAC pool lid and top lid has been performed.* The qualification is based on the Regulatory Guide 3.61 requirement that a load factor of 3 results in stresses less than the yield stress. ~~Lifting of the HI-TRAC 125 pool lid and top lid are considered in Appendix 3.AC.~~ The results for the HI-TRAC 125 bound the results for the HI-TRAC 125D, and the HI-TRAC 100, since the lid weights used in *the calculation* ~~Appendix 3.AC~~ are greater than or equal to all other HI-TRAC lid weights. In addition, the HI-TRAC 125D has larger diameter lifting holes in its pool lid, which provide greater capacity

for lifting. Example commercially available lifting structures are considered ~~in Appendix 3.AC~~ and it is shown that thread engagement lengths are acceptable. Loads to lifting devices are permitted to be at a maximum angle of 45 degrees from vertical. A summary of results ~~from Appendix 3.AC~~, pertaining to the various lid lifting operations, is given in the table below:

Summary of HI-STORM 100 Lid Lifting Analyses		
Item	**Dead Load (lb)**	**Minimum Safety Factor**
HI-STORM 100 (100S) Top Lid Lifting	23,000 (25,500)	1.978 (1.784)
HI-TRAC Pool Lid Lifting	12,500	4.73
HI-TRAC Top Lid Lifting	2,750	11.38

The analysis ~~Appendix 3.AC~~ demonstrates that thread engagement is sufficient for the threaded holes used solely for lid lifting and that commercially available lifting devices engaging the threaded holes, are available. We note that all reported safety factors are based on an allowable strength equal to 33.3% of the yield strength of the lid material when evaluating shear capacity of the internal threads and based on the working loads of the commercially available lifting devices associated with the respective threaded holes.

3.4.3.8 HI-TRAC Pool Lid Analysis - Lifting MPC From the Spent Fuel Pool (Load Case 01 in Table 3.1.5)

During lifting of the MPC from the spent fuel pool, the HI-TRAC pool lid supports the weight of a loaded MPC plus water (see Figure 3.4.21). ~~Appendix 3.AB details the c~~Calculations *are* performed to show structural integrity under this condition for both the HI-TRAC 100 and the HI-TRAC 125 transfer casks. In accordance with the general guidelines set down at the beginning of Subsection 3.4.3, the pool lid is considered as both Region A and Region B for evaluating safety factors. The analysis ~~in Appendix 3.AB~~ shows that the stress in the pool lid top plate is less than the Level A allowable stress under pressure equivalent to the heaviest MPC, contained water, and lid self weight (Region B evaluation). Stresses in the lids and bolts are also shown to be below yield under three times the applied lifted load (Region A evaluation using Regulatory Guide 3.61 criteria). The threaded holes in the HI-TRAC pool lid are also examined for acceptable engagement length under the condition of lifting the MPC from the pool. ~~This analysis is performed in Appendix 3.AC.~~ It is demonstrated ~~in Appendix 3.AC~~ that the pool lid peripheral bolts have adequate engagement length into the pool lid to permit the transfer of the required load. The safety factor is defined based on the strength limits imposed by Regulatory Guide 3.61.

The following table summarizes the results of the analyses *for the HI-TRAC pool lid*~~performed in Appendix 3.AB and the thread engagement calculation in Appendix 3.AC~~, as well as the results of similar calculations for the HI-TRAC 125D. Results given in the following table compare calculated stress (or load) and allowable stress (or load). In all cases, the safety factor is defined as the allowable value divided by the calculated value.

HI-TRAC Pool Lid Lifting a Loaded MPC Evaluation†			
Item	Value (ksi)	Allowable (ksi)	Safety Factor
Lid Bending Stress - HI-TRAC 125 - Region B Analysis - Pool Lid Top Plate	10.1	26.3	2.604
Lid Bending Stress - HI-TRAC 125 - Region B Analysis - Pool Lid Bottom Plate	5.05	26.3	5.208
Lid Bending Stress - HI-TRAC 100 - Region B Analysis- Pool Lid Top Plate	10.06	26.3	2.614
Lid Bending Stress - HI-TRAC 100 - Region B Analysis- Pool Lid Bottom Plate	6.425	26.3	4.093
Lid Bending Stress - HI-TRAC 125D - Region B Analysis - Pool Lid Top Plate	10.1	26.3	2.604
Lid Bending Stress - HI-TRAC 125D - Region B Analysis - Pool Lid Bottom Plate	5.05	26.3	5.208
Lid Bolt Stress - HI-TRAC 125 – (3D*)	18.92	95.0	5.02
Lid Bolt Stress - HI-TRAC 100 – (3D*)	18.21	95.0	5.216
Lid Bolt Force - HI-TRAC 125D – (3D*)	25.77‡	84.05‡	3.262
Lid Bending Stress - HI-TRAC 125 - Region A Analysis - Pool Lid Top Plate (3D*)	30.3	33.15	1.094
Lid Bending Stress - HI-TRAC 125 - Region A Analysis - Pool Lid Bottom Plate (3D*)	15.15	33.15	2.188
Lid Bending Stress –HI-TRAC 100 – Region A Analysis- Pool Lid Top Plate (3D*)	30.19	33.15	1.098
Lid Bending Stress –HI-TRAC 100 – Region A Analysis- Pool Lid Bottom Plate (3D*)	19.28	33.15	1.72
Lid Bending Stress - HI-TRAC 125D - Region A Analysis - Pool Lid Top Plate (3D*)	30.3	33.15	1.094
Lid Bending Stress –HI-TRAC 125D – Region A Analysis- Pool Lid Bottom Plate (3D*)	15.15	33.15	2.188
Lid Thread Engagement Length (HI-TRAC 125)	137.5‡	324.6‡	2.362

† Region A and B defined at beginning of Subsection 3.4.3.
‡ Calculated and allowable value for this item in (kips).

3.4.3.9 HI-TRAC Transfer Lid Analysis - Lifting MPC Away from Spent Fuel Pool (Load Case 01 in Table 3.1.5)

During transfer to or from a storage overpack using a HI-TRAC 125 or a HI-TRAC 100, the HI-TRAC transfer lid supports the weight of a loaded MPC. Figure 3.4.21 illustrates the lift operation. In accordance with the general lifting analysis guidelines, the transfer lid should be considered as both a Region A (Regulatory Guide 3.61 criteria) and a Region B location (ASME Section III, Subsection NF for Class 3 plate and shell structures) for evaluation of safety factors. ~~Appendices 3.AD and 3.AJ present analyses and results for t~~*T*he HI-TRAC 125 transfer lid and the HI-TRAC 100 transfer lid *are analyzed separately because of differences in geometry*~~, respectively~~. The HI-TRAC 125D employs a specially designed mating device in combination with the pool lid to transfer a loaded MPC to or from a storage overpack. Thus, a transfer lid analysis is not performed for the HI-TRAC 125D. Results for the HI-TRAC 125D pool lid are presented in the previous subsection.

It is shown ~~in the above-mentioned appendices~~ that the transfer lid doors can support a loaded MPC together with the door weight without exceeding ASME NF stress limits and the more conservative limits of Regulatory Guide 3.61. It is also shown that the connecting structure transfers the load to the cask body without overstress. The following tables summarize the results for both HI-TRAC casks:

HI-TRAC 125 Transfer Lid – Lifting Evaluation†			
Item	**Value (ksi)**	**Allowable (ksi)**	**Safety Factor**
HI-TRAC 125 - Door Plate – (3D*)	9.381	32.7	3.486
HI-TRAC 125 - Door Plate – Region B	3.127	26.25	8.394
HI-TRAC 125 – Wheel Track (3D*)	26.91	36.0	1.338
HI-TRAC 125 - Door Housing Bottom Plate-Region B	7.701	26.25	3.409
HI-TRAC 125 - Door Housing Bottom Plate-(3D*)	23.103	32.7	1.415
HI-TRAC 125 - Door Housing Stiffeners- (3D*)	4.131	32.7	7.913
HI-TRAC 125 - Housing Bolts-Region B	29.96	57.5	1.919
HI-TRAC 125 – Housing Bolts (3D*)	89.88	95.0	1.057
HI-TRAC 125 – Lid Top Plate (3D*)	30.907	32.7	1.058

† Region A and B defined at beginning of Subsection 3.4.3

HI-TRAC 100 Transfer Lid – Lifting Evaluation†			
Item	Value (ksi)	Allowable (ksi)	Safety Factor
HI-TRAC 100 - Door Plate – (3D*)	22.188	32.7	1.474
HI-TRAC 100 - Door Plate – Region B	7.396	26.25	3.549
HI-TRAC 100 – Wheel Track (3D*)	13.011	36.0	2.767
HI-TRAC 100 – Door Housing Bottom Plate- Region B	7.447	26.25	3.525
HI-TRAC 100 – Door Housing Bottom Plate- (3D*)	22.336	32.7	1.464
HI-TRAC 100 – Door Housing Stiffeners- (3D*)	4.917	32.7	6.65
HI-TRAC 100 – Welds Connecting Door Housing Stiffeners (3D*)	11.802	32.7	2.771
HI-TRAC 100 - Housing Bolts-Region B	22.478	57.5	2.558
HI-TRAC 100 – Housing Bolts (3D*)	67.423	95.0	1.409
HI-TRAC 100 – Lid Top Plate (3D*)	19.395	32.7	1.686

† Region A and B defined at beginning of Subsection 3.4.3

3.4.3.10 HI-TRAC Bottom Flange Evaluation during Lift (Load Case 01 in Table 3.1.5)

During a lifting operation, the HI-TRAC transfer cask body supports the load of a loaded MPC, and the transfer lid (away from the spent fuel pool) or the pool lid plus contained water (lifting from the spent fuel pool). In either case, the load is transferred to the bottom flange of HI-TRAC through the bolts and a state of stress in the flange and the supporting inner and outer shells is developed. Figure 3.4.21 illustrates the lifting operation. ~~Appendix 3.AE provides the evaluation of t~~This area of the HI-TRAC 125 *is analyzed* to demonstrate that *the* required limits on stress are maintained for both ASME and Regulatory Guide 3.61. The bottom flange is considered as an annular plate subject to a total bolt load acting at the bolt circle and supported by reaction loads developed in the inner and outer shells of HI-TRAC. The solution for maximum flange bending stress is found in the classical literature and stresses and corresponding safety factors developed for the bottom flange and for the outer and inner shell weld shear stress. Since the welds are partial penetration, weld stress evaluation bounds an evaluation of direct stress. The table below summarizes the results of the evaluation ~~in Appendix 3.AE~~.

Safety Factors in HI-TRAC Bottom Flange During a Lift Operation			
Item	Value(ksi)	Allowable(ksi)	Safety Factor
Bottom Flange – Region B	7.798	26.25	3.37
Bottom Flange (3D*)	23.39	33.15	1.42
Outer Shell (3D*)	4.773	33.15	6.94

The results above bound the results for the HI-TRAC 125D since the dimensions used as input ~~in Appendix 3.AE~~ for the inner shell, the outer shell, and the bottom flange (including the bolt circle diameter) are the same in both the HI-TRAC 125 and 125D transfer casks. In addition, the bottom flange of the HI-TRAC 125D is reinforced by eight gusset plates, whereas the HI-TRAC 125 bottom flange is not reinforced.

3.4.3.11 Conclusion

Synopses of lifting device, device/component interface, and component stresses, under all contemplated lifting operations for the HI-STORM 100 System have been presented in the foregoing. The HI-STORM storage overpack and the HI-TRAC transfer cask have been evaluated for limiting stress states. The results show that all factors of safety are greater than 1.

3.4.4 Heat

The thermal evaluation of the HI-STORM 100 System is reported in Chapter 4.

3.4.4.1 Summary of Pressures and Temperatures

Design pressures and design temperatures for all conditions of storage are listed in Tables 2.2.1 and 2.2.3, respectively.

3.4.4.2 Differential Thermal Expansion

Consistent with the requirements of Reg. Guide 3.61, Load Cases F1 (Table 3.1.3) and E4 (Table 3.1.4) are defined to study the effect of differential thermal expansion among the constituent components in the HI-STORM 100 System. ~~Tables 4.4.9, 4.4.10, 4.4.26, 4.4.27, and 4.4.36 provide t~~The temperatures necessary to perform the differential thermal expansion analyses for the MPC in the HI-STORM 100 and HI-TRAC casks *are provided in Chapter 4*~~, respectively~~. The material presented in ~~the remainder of this paragraph~~ *Subsection 4.4.5* demonstrates that a physical interference between discrete components of the HI-STORM 100 System (e.g., storage overpack and enclosure vessel) will not develop due to differential thermal expansion during any operating condition.

3.4.4.2.1 Normal Hot Environment

Closed form calculations are performed *in Subsection 4.4.5* to demonstrate that initial gaps between the HI-STORM 100 storage overpack or the HI-TRAC transfer cask and the MPC canister, and between the MPC canister and the fuel basket, will not close due to thermal expansion of the system components under loading conditions, defined as F1 and E4 in Tables 3.1.3 and 3.1.4, respectively. To assess this in the most conservative manner, the thermal solutions computed in Chapter 4, including the thermosiphon effect, are surveyed for the following information.

- The radial temperature distribution in each of the fuel baskets at the location of peak center metal temperature.

- The highest and lowest mean temperatures of the canister shell for the hot environment condition.

- ~~The inner and outer surface temperature of the HI-STORM 100 storage overpack and the HI-TRAC transfer cask at the location of highest and lowest surface temperature (which will produce the lowest mean temperature).~~

Tables 4.4.9, 4.4.10, *and* 4.4.26~~, 4.4.27, and 4.4.36~~ present the resulting temperatures used in the evaluation of the MPC expansion in the HI-STORM 100 storage overpack. Table 4.5.2 presents similar results for the MPC in the HI-TRAC transfer cask.

Using the temperature information in the above-mentioned tables, simplified thermoelastic solutions of equivalent axisymmetric problems are used to obtain conservative estimates of gap closures. The following procedure, which conservatively neglects axial variations in temperature distribution, is utilized.

1. Use the surface temperature information for the fuel basket to define a parabolic distribution in the fuel basket that bounds (from above) the actual temperature distribution. Using this result, generate a conservatively high estimate of the radial and axial growth of the different fuel baskets using classical closed form solutions for thermoelastic deformation in cylindrical bodies.

2. Use the temperatures obtained for the canister to predict an estimate of the radial and axial growth of the canister to check the canister-to-basket gaps.

3. Use the temperatures obtained for the canister to predict an estimate of the radial and axial growth of the canister to check the canister-to-storage overpack and canister-to-HI-TRAC gaps.

~~4. Use the storage overpack and HI-TRAC surface temperatures to construct a logarithmic temperature distribution (characteristic of a thick walled cylinder) at the location used for canister thermal growth calculations; and use this distribution to predict an estimate of storage overpack or HI-TRAC (as applicable) radial and axial growth.~~

~~4~~5. For given initial clearances, compute the operating clearances.

~~The calculation procedure outlined above is used in Appendix 3.I (HI-TRAC), and in Appendices 3.U, 3.V, 3.W, and 3.AQ (HI-STORM 100 storage overpack with MPC-24, MPC-32, MPC-68, and 24E respectively).~~ The results are summarized in ~~the tables given below~~ *Subsection 4.4.5* for normal storage conditions. *It can be verified by referring to the Design Drawings provided in Section 1.5 of*

this report and Subsection 4.4.5, that the clearances between the MPC basket and canister structure, as well as that between the MPC shell and storage overpack or HI-TRAC inside surface, are sufficient to preclude a temperature induced interference from differential thermal expansions under normal operating conditions.

~~The worst-case MPC is evaluated in the HI-TRAC transfer cask, in lieu of all MPC designs. In all cases, the minimal initial radial gap between MPC and overpack is used as the initial point.~~

~~THERMOELASTIC DISPLACEMENTS IN THE MPC AND HI-STORM 100 STORAGE OVERPACK UNDER HOT TEMPERATURE ENVIRONMENT CONDITION~~				
~~CANISTER – FUEL BASKET~~				
	~~Radial Direction (in.)~~		~~Axial Direction (in.)~~	
~~Unit~~	~~Initial Clearance~~	~~Final Clearance~~	~~Initial Clearance~~	~~Final Clearance~~
~~MPC-24~~	~~0.1875~~	~~0.1048~~	~~1.8125~~	~~1.404~~
~~MPC-24E~~	~~0.1875~~	~~0.104~~	~~1.8125~~	~~1.404~~
~~MPC-32~~	~~0.1875~~	~~0.103~~	~~1.8125~~	~~1.398~~
~~MPC-68~~	~~0.1875~~	~~0.091~~	~~1.8125~~	~~1.336~~
~~CANISTER – STORAGE OVERPACK~~				
~~Unit~~	~~Radial Direction (in.)~~		~~Axial Direction (in.)~~	
	~~Initial Clearance~~	~~Final Clearance~~	~~Initial Clearance~~	~~Final Clearance~~
~~MPC-24~~	~~0.5~~	~~0.435~~	~~1.0~~	~~0.633~~
~~MPC-24E~~	~~0.5~~	~~0.434~~	~~1.0~~	~~0.628~~
~~MPC-32~~	~~0.5~~	~~0.433~~	~~1.0~~	~~0.621~~
~~MPC-68~~	~~0.5~~	~~0.434~~	~~1.0~~	~~0.628~~
~~THERMOELASTIC DISPLACEMENTS IN THE MPC AND HI-TRAC UNDER HOT TEMPERATURE ENVIRONMENT CONDITION~~				
~~CANISTER – FUEL BASKET~~				
	~~Radial Direction (in.)~~		~~Axial Direction (in.)~~	
~~Unit~~	~~Initial Clearance~~	~~Final Clearance~~	~~Initial Clearance~~	~~Final Clearance~~
~~MPC (worst case)~~	~~0.1875~~	~~0.083~~	~~1.8125~~	~~1.305~~
~~CANISTER – HI-TRAC~~				
	~~Radial Direction (in.)~~		~~Axial Direction (in.)~~	
~~Unit~~	~~Initial Clearance~~	~~Final Clearance~~	~~Initial Clearance~~	~~Final Clearance~~
~~MPC (worst case)~~	~~0.125~~	~~0.123~~	~~0.75~~	~~0.735~~

~~It can be verified by referring to the Design Drawings provided in Section 1.5 of this report and the foregoing table, that the clearances between the MPC basket and canister structure, as well as that between the MPC shell and storage overpack or HI-TRAC inside surface, are sufficient to preclude a temperature induced interference from differential thermal expansions under normal operating conditions.~~

3.4.4.2.2 Fire Accident

It is shown in Chapter 11 that the fire accident has a small effect on the MPC temperatures because of the short duration of the fire accidents and the large thermal inertia of the storage overpack. Therefore, a structural evaluation of the MPC under the postulated fire event is not required. The conclusions reached in Subsection 3.4.4.2.1 are also appropriate for the fire accident with the MPC housed in the storage overpack. Analysis of fire accident temperatures of the MPC housed within the HI-TRAC for thermal expansion is unnecessary, as the HI-TRAC, directly exposed to the fire, expands to increase the gap between the HI-TRAC and MPC.

As expected, the external surfaces of the HI-STORM 100 storage overpack that are directly exposed to the fire event experience maximum rise in temperature. The outer shell and top plate in the top lid are the external surfaces that are in direct contact with heated air from fire. The table below, extracted from data provided in Chapter 11, provides the maximum temperatures attained at the key locations in HI-STORM 100 storage overpack under the postulated fire event.

Component	Maximum Fire Condition Temperature (Deg. F)
Storage Overpack Inner Shell	300
Storage Overpack Radial Concrete Mid-Depth	*235~~173~~*
Storage Overpack Outer Shell	*585~~570~~*
Storage Overpack Lid	*<585~~570~~*

The following conclusions are readily reached from the above table.

- The maximum metal temperature of the carbon steel shell most directly exposed to the combustion air is well below 600°F (Table 2.2.3 applicable short-term temperature limit). 600°F is well below the permissible temperature limit in the ASME Code for the outer shell material.

- The bulk temperature of concrete is well below the normal condition temperature limit of 300°F specified in Table 2.2.3 and Appendix 1.D. ACI-349 permits 350°F as the short-term temperature limit; the shielding concrete in the HI-STORM 100 Overpack, as noted in Appendix 1.D, will comply with the specified compositional and manufacturing provisions of ACI-349. As the detailed information in Section 11.2 shows, the radial extent in the concrete where the local temperature exceeds 350°F begins at the outer shell/concrete interface and ends in less than one-inch. Therefore, the potential loss in the shielding material's effectiveness is less than 4% of the concrete shielding mass in the overpack annulus.

- The metal temperature of the inner shell does not exceed 300°F at any location, which is below the *accident*~~normal~~ condition temperature limit of *400*~~350~~°F specified in Table 2.2.3 for the inner shell.

- The presence of a stitch weld between the overpack inner shell and the overpack top plate ensures that there will be no pressure buildup in the concrete annulus due to the concrete losing

water that then turns to steam.

The above summary confirms that the postulated fire event will not jeopardize the structural integrity of the HI-STORM 100 Overpack or significantly diminish its shielding effectiveness.

The above conclusions, as relevant, also apply to the HI-TRAC fire considered in Chapter 11. Water jacket over-pressurization is precluded by the safety valve set point. The non-structural effects of loss of water have been evaluated in Chapter 5 and shown to meet regulatory limits. Therefore, it is concluded that the postulated fire event will not cause significant loss in storage overpack or HI-TRAC shielding function.

3.4.4.3 Stress Calculations

This subsection presents calculations of the stresses in the different components of the HI-STORM 100 System from the effects of mechanical load case assembled in Section 3.1. Loading cases for the MPC fuel basket, the MPC enclosure vessel, the HI-STORM 100 storage overpack and the HI-TRAC transfer cask are listed in Tables 3.1.3 through 3.1.5, respectively. The load case identifiers defined in Tables 3.1.3 through 3.1.5 denote the cases considered.

The purpose of the analyses is to provide the necessary assurance that there will be no unacceptable risk of criticality, unacceptable release of radioactive material, unacceptable radiation levels, or impairment of ready retrievability of fuel from the MPC and the MPC from the HI-STORM 100 storage overpack or from the HI-TRAC transfer cask.

For all stress evaluations, the allowable stresses and stress intensities for the various HI-STORM 100 System components are based on bounding high metal temperatures to provide additional conservatism (Table 3.1.17 for the MPC basket, for example).

In addition to the loading cases germane to stress evaluations mentioned above, three cases pertaining to the stability of HI-STORM 100 are also considered (Table 3.1.1).

The results of various stress calculations on components are reported. The calculations are either performed directly as part of the text, or *carried out in a separate calculation report* ~~are summarized in an appendix (see the list of all supporting appendices provided in Section 3.6)~~ that provides details of strength of materials evaluations or finite element numerical analysis. The specific calculations reported in this subsection are:

1. MPC stress calculations
2. HI-STORM 100 storage overpack stress calculations
3. HI-TRAC stress calculations

The MPC calculations reported in this document are complemented by analyses in the HI-STAR 100 Dockets. As noted earlier in this chapter, calculations for MPC components that are reported in HI-STAR 100 FSAR and SAR (Docket Numbers 72-1008 or 71-9261) are not repeated here unless geometry or load changes warrant reanalysis. For example, analysis of the MPC lid is not included in

this submittal since neither the MPC lid loading nor geometry is affected by the MPC being placed in HI-TRAC or HI-STORM 100. MPC stress analyses reported herein focus on the basket and canister stress distributions due to the design basis (45g) lateral deceleration imposed by a non-mechanistic tip-over of the HI-STORM 100 storage overpack or a horizontal drop of HI-TRAC. In the submittals for the HI-STAR 100 FSAR and SAR (Docket Numbers 72-1008 and 71-9261, for storage and transport, respectively), the design basis deceleration was 60g. In this submittal the design basis deceleration is 45g. However, since the geometry of the MPC external boundary condition, viz. canister-to-storage overpack gap, has changed, a reanalysis of the MPC stresses under the lateral deceleration loads is required. This analysis is performed and the results are summarized in this subsection.

The HI-STORM 100 storage overpack and the HI-TRAC transfer cask have been evaluated for certain limiting load conditions that are germane to the storage and operational modes specified for the system in Tables 3.1.1 and 3.1.5. The determination of component safety factors at the locations considered in the HI-STORM 100 storage overpack and in the HI-TRAC transfer cask is based on the allowable stresses permitted by the ASME Code Section III, Subsection NF for Class 3 plate and shell support structures.

3.4.4.3.1 MPC Stress Calculations

The structural function of the MPC in the storage mode is stated in Section 3.1. The calculations presented here demonstrate the ability of the MPC to perform its structural function. The purpose of the analyses is to provide the necessary assurance that there will be no unacceptable risk of criticality, unacceptable release of radioactive material, or impairment of ready retrievability.

3.4.4.3.1.1 Analysis of Load Cases E.3.b, E.3.c (Table 3.1.4) and F.3.b, F.3.c (Table 3.1.3)

Analyses are performed for each of the MPC designs. The following subsections describe the model, individual loads, load combinations, and analysis procedures applicable to the MPC. Unfortunately, unlike vertical loading cases, where the analyses performed in the HI-STAR 100 dockets remain fully applicable for application in HI-STORM 100, the response of the MPC to a horizontal loading event is storage overpack-geometry dependent. Under a horizontal drop event, for example, the MPC and the fuel basket structure will tend to flatten. The restraint to this flattening offered by the storage overpack will clearly depend on the difference in the diameters of the storage overpack internal cavity and that of the outer surface of the MPC. In the HI-STORM 100 storage overpack, the diameter difference is larger than that in HI-STAR 100; therefore, the external restraint to MPC ovalization under a horizontal drop event is less effective. For this reason, the MPC stress analysis for lateral loading scenarios must be performed anew for the HI-STORM 100 storage overpack; the results from the HI-STAR 100 analyses will not be conservative. The HI-TRAC transfer casks and HI-STAR 100 overpack inner diameters are identical. Therefore, the analysis of the MPC in the HI-STAR 100 overpack under 60g's for the side impact (Docket 72-1008) bounds the analysis of the MPC in the HI-TRAC under 45g's.

Description of Finite Element Models of the MPCs Under Lateral Loading

A finite element model of each MPC is used to assess the effects of the accident loads. The models are constructed using ANSYS [3.4.1], and they are identical to the models used in Holtec's HI-STAR 100 submittals in Docket Numbers 72-1008 and 71-9261. The following model description is common to all MPCs.

The MPC structural model is two-dimensional. It represents a one-inch long cross section of the MPC fuel basket and MPC canister.

The MPC model includes the fuel basket, the basket support structures, and the MPC shell. A basket support is defined as any structural member that is welded to the inside surface of the MPC shell. A portion of the storage overpack inner surface is modeled to provide the correct restraint conditions for the MPC. Figures 3.4.1 through 3.4.9 show typical MPC models. The fuel basket support structure shown in the figures is a multi-plate structure consisting of solid shims or support members having two separate compressive load supporting members. For conservatism in the finite element model some dual path compression members (i.e., "V" angles) are simulated as single columns. Therefore, the calculated stress intensities in the fuel basket angle supports from the finite element solution are conservatively overestimated in some locations.

The ANSYS model is not intended to resolve the detailed stress distributions in weld areas. Individual welds are not included in the finite element model. A separate analysis for basket welds and for the basket support "V" angles is *performed outside of ANSYS*~~contained in Appendix 3.Y~~.

No credit is taken for any load support offered by the *neutron absorber* ~~Boral~~ panels, sheathing, and the aluminum heat conduction elements. Therefore, these so-called non-structural members are not represented in the model. The bounding MPC weight used, however, does include the mass contributions of these non-structural components.

The model is built using five ANSYS element types: BEAM3, PLANE82, CONTAC12, CONTAC26, and COMBIN14. The fuel basket and MPC shell are modeled entirely with two-dimensional beam elements (BEAM3). Plate-type basket supports are also modeled with BEAM3 elements. Eight-node plane elements (PLANE82) are used for the solid-type basket supports. The gaps between the fuel basket and the basket supports are represented by two-dimensional point-to-point contact elements (CONTAC12). Contact between the MPC shell and the storage overpack is modeled using two-dimensional point-to-ground contact elements (CONTAC26) with an appropriate clearance gap.

Two orientations of the deceleration vector are considered. The 0-degree drop model includes the storage overpack-MPC interface in the basket orientation illustrated in Figure 3.1.2. The 45-degree drop model represents the storage overpack-MPC interface with the basket oriented in the manner of Figure 3.1.3. The 0-degree and the 45-degree drop models are shown in Figures 3.4.1 through 3.4.6. Table 3.4.1 lists the element types and number of elements for current MPC's.

A contact surface is provided in the model ~~is~~ used for drop analyses to represent *the interface between* the storage overpack channels *and the MPC*. As the MPC makes contact with the storage overpack, the MPC shell deforms to mate with the channels that are welded at equal intervals around the storage overpack inner surface. The nodes that define the elements representing the fuel basket and the MPC shell are located along the centerline of the plate material. As a result, the line of nodes that forms the perimeter of the MPC shell is inset from the real boundary by a distance that is equal to half of the shell thickness. In order to maintain the specified MPC shell/storage overpack gap dimension, the radius of the storage overpack channels is decreased by an equal amount in the model.

The three discrete components of the HI-STORM 100 System, namely the fuel basket, the MPC shell, and the storage overpack or HI-TRAC transfer cask, are engineered with small diametral clearances which are large enough to permit unconstrained thermal expansion of the three components under the rated (maximum) heat duty condition. A small diametral gap under ambient conditions is also necessary to assemble the system without physical interference between the contiguous surfaces of the three components. The required gap to ensure unrestricted thermal expansion between the basket and the MPC shell is small and will further decrease under maximum heat load conditions, but will introduce a physical nonlinearity in the structural events involving lateral loading (such as side drop of the system) under ambient conditions. It is evident from the system design drawings that the fuel basket that is non-radially symmetric is in proximate contact with the MPC shell at a discrete number of locations along the circumferences. At these locations, the MPC shell, backed by the channels attached to the storage overpack, provides a support line to the fuel basket during lateral drop events. Because the fuel basket, the MPC shell, and the storage overpack or HI-TRAC are all three-dimensional structural weldments, their inter-body clearances may be somewhat uneven at different azimuthal locations. As the lateral loading is increased, clearances close at the support locations, resulting in the activation of the support from the storage overpack or HI-TRAC.

The bending stresses in the basket and the MPC shell at low lateral loading levels which are too small to close the support location clearances are secondary stresses since further increase in the loading will activate the storage overpack's or HI-TRAC's transfer cask support action, mitigating further increase in the stress. Therefore, to compute primary stresses in the basket and the MPC shell under lateral drop events, the gaps should be assumed to be closed. However, in the analyses, we have conservatively assumed that an initial gap of 0.1875" exists, in the direction of the applied deceleration, at all support locations between the fuel basket and the MPC shell and that the clearance gap between the shell and the storage overpack at the support locations is 3/16". In the evaluation of safety factors for the MPC-24, MPC-32, and MPC-68, the total stress state produced by the applied loading on these configurations is conservatively compared with primary stress levels, even though the self-limiting stresses should be considered secondary in the strict definition of the Code. To illustrate the conservatism, we have eliminated the secondary stress (that develops to close the clearances) in the comparison with primary stress allowable values and report safety factors for the MPC-24E that are based only on primary stresses necessary to maintain equilibrium with the inertia forces.

ANSYS requires that for a static solution all bodies be constrained to prevent rigid body motion. Therefore, in the 0 degree and 45 degree drop models, two-dimensional linear spring elements (COMBIN14) join the various model components, i.e., fuel basket and enclosure vessel, at the point of initial contact. This provides the necessary constraints for the model components in the direction of the impact. By locating the springs at the points of initial contact, where the gaps remain closed, the behavior of the springs is identical to the behavior of a contact element. Linear springs and contact elements that connect the same two components have equal stiffness values.

Description of Individual Loads and Boundary Conditions Applied to the MPCs

The method of applying each individual load to the MPC model is described in this subsection. The individual loads are listed in Table 2.2.14. A free-body diagram of the MPC corresponding to each individual load is given in Figures 3.4.7-3.4.9. In the following discussion, reference to vertical and horizontal orientations is made. Vertical refers to the direction along the cask axis, and horizontal refers to a radial direction.

Quasi-static structural analysis methods are used. The effects of any dynamic load factors (DLFs) are included in the final evaluation of safety factors. All analyses are carried out using the design basis decelerations in Table 3.1.2.

The MPC models used for side drop evaluations are shown in Figures 3.4.1 through 3.4.6. In each model, the fuel basket and the enclosure vessel are constrained to move only in the direction that is parallel to the acceleration vector. The storage overpack inner shell, which is defined by three nodes needed to represent the contact surface, is fixed in all degrees of freedom. The fuel basket, enclosure vessel, and storage overpack inner shell -are all connected at one location by linear springs, as described in Subsection 3.4.4.3.1.1 (see Figure 3.4.1, for example). Detailed side drop evaluations here focus on an MPC within a HI-STORM 100 storage overpack. Since the analyses performed in Docket Number 72-1008 for the side drop condition in the HI-STAR 100 storage overpack demonstrates a safe condition under a 60g deceleration, no new analysis is required for the MPC and contained fuel basket and fuel during a side drop in the HI-TRAC, which is limited to a 45g deceleration (HI-TRAC and HI-STAR 100 overpacks have the same inside dimensions).

Accelerations

During a side impact event, the stored fuel is directly supported by the cell walls in the fuel basket. Depending on the orientation of the drop, 0 or 45 degrees (see Figures 3.4.8 and 3.4.9), the fuel is supported by either one or two walls. In the finite element model this load is effected by applying a uniformly distributed pressure over the full span of the supporting walls. The magnitude of the pressure is determined by the weight of the fuel assembly (Table 2.1.6), the axial length of the fuel basket support structure, the width of the cell wall, and the impact acceleration. It is assumed that the load is evenly distributed along an axial length of basket equal to the fuel basket support structure. For example, the pressure applied to an impacted cell wall during a 0-degree side drop event is calculated as follows:

$$p = \frac{a_n W}{L c}$$

where:

p = pressure

a_n = ratio of the impact acceleration to the gravitational acceleration

W = weight of a stored fuel assembly

L = axial length of the fuel basket support structure

c = width of a cell wall

For the case of a 45-degree side drop the pressure on any cell wall equals p (defined above) divided by the square root of 2.

It is evident from the above that the effect of deceleration on the fuel basket and canister metal structure is accounted for by amplifying the gravity field in the appropriate direction.

Internal Pressure

Design internal pressure is applied to the MPC model. The inside surface of the enclosure vessel shell is loaded with pressure. The magnitude of the internal pressure applied to the model is taken from Table 2.2.1.

For this load condition, the center node of the fuel basket is fixed in all degrees of freedom to numerically satisfy equilibrium.

Temperature

Temperature distributions are developed in Chapter 4 and applied as nodal temperatures to the finite element model of the MPC enclosure vessel (confinement boundary). Maximum design heat load has been used to develop the temperature distribution used to demonstrate compliance with ASME Code stress intensity levels.

Analysis Procedure

The analysis procedure for this set of load cases is as follows:

1. The stress intensity and deformation field due to the combined loads is determined by the finite element solution. Results are postprocessed and tabulated in the calculation package associated with this FSAR.

2. The results for each load combination are compared to allowables. The comparison with allowable values is made in Subsection 3.4.4.4.

3.4.4.3.1.2 Analysis of Load Cases E1.a and E1.c (Table 3.1.4)

Since the MPC shell is a pressure vessel, the classical Lame's calculations should be performed to demonstrate the shell's performance as a pressure vessel. We note that dead load has an insignificant effect on this stress state. We first perform calculations for the shell under internal pressure. Subsequently, we examine the entire confinement boundary as a pressure vessel subject to both internal pressure and temperature gradients. Finally, we perform confirmatory hand calculations to gain confidence in the finite element predictions.

The stress from internal pressure is found for normal and accident pressures conditions using classical formulas:

Define the following quantities:

P = pressure, r = MPC radius, and t = shell thickness.

Using classical thin shell theory, the circumferential stress, $\sigma_1 = Pr/t$, the axial stress $\sigma_2 = Pr/2t$, and the radial stress $\sigma_3 = -P$ are computed for both normal and accident internal pressures. The results are given in the following table (conservatively using the outer radius for r):

Classical Shell Theory Results for Normal and Accident Internal Pressures				
Item	**σ_1 (psi)**	**σ_2 (psi)**	**σ_3 (psi)**	**$\sigma_1 - \sigma_3$ (psi)**
P= 100 psi	6838	3419	-100	6938
P= 200 psi	13675	6838	-200	13875

Finite Element Analysis (Load Case E1.a and E1.c of Table 3.1.4)

The MPC shell, the top lid, and the baseplate together form the confinement boundary (enclosure vessel) for storage of spent nuclear fuel. In this section, we evaluate the operating condition consisting of dead weight, internal pressure, and thermal effects for the hot condition of storage. The top and bottom plates of the MPC enclosure vessel (EV) are modeled using plane axisymmetric elements, while the shell is modeled using the axisymmetric thin shell element. The thickness of the top lid varies in the different MPC types; for conservative results, the minimum thickness top lid is modeled. The temperature distributions for all MPC constructions are nearly identical in magnitude and gradient and reflect the thermosiphon effect inside the MPC. Temperature differences across the thickness of both the baseplate and the top lid exist during HI-STORM 100's operations. There is also a thermal gradient from the center of the top lid and baseplate out to the shell wall. The metal temperature profile is essentially parabolic from the centerline of the MPC out to the MPC shell. There is also a parabolic temperature profile along the length of the MPC canister. Figure 3.4.11

shows a sketch of the confinement boundary structure with identifiers A-I locating points where temperature input data is used to represent a continuous temperature distribution for analysis purposes. The overall dimensions of the confinement boundary are also shown in the figure.

The desired temperatures for confinement thermal stress analysis are determined from *the thermal numerical analyses that support* Tables 4.4.9, 4.4.10, ~~4.4.19, *and* 4.4.26, and 4.4.27~~ in Chapter 4. The MPC-68 is identified to have the maximum through thickness thermal gradients. Detailed stress analyses are performed only for the MPC-68; these results are representative for all MPCs.

Figure 3.4.12 shows details of the finite element model of the top lid, canister shell, and baseplate. The top lid is modeled with 40 axisymmetric quadrilateral elements; the weld connecting the lid to the shell is modeled by a single element solely to capture the effect of the top lid attachment to the canister offset from the middle surface of the top lid. The MPC canister is modeled by 50 axisymmetric shell elements, with 20 elements concentrated in a short length of shell appropriate to capture the so-called "bending boundary layer" at both the top and bottom ends of the canister. The remaining 10 shell elements model the MPC canister structure away from the shell ends in the region where stress gradients are expected to be of less importance. The baseplate is modeled by 20 axisymmetric quadrilateral elements. Deformation compatibility at the connections is enforced at the top by the single weld element, and deformation and rotation compatibility at the bottom by additional shell elements between nodes 106-107 and 107-108.

The geometry of the model is listed below (terms are defined in Figure 3.4.12):

$H_t =$ 9.5" (the minimum thickness lid is assumed)

$R_L =$ 0.5 x 67.25" (Bill of Materials for Top Lid)

$L_{MPC} =$ 190.5" (Drawing 1996, Sheet 1)

$t_s =$ 0.5"

$t_{BP} =$ 0.5 x 68.375"

$\beta =$ $2\sqrt{R_s t_s} \approx 12"$ (the "bending boundary layer")

Stress analysis results are obtained for two cases as follows:

a. internal pressure = 100 psi

b. internal pressure = 100 psi plus applied temperatures

For this configuration, dead weight of the top lid acts to reduce the stresses due to pressure. For example, the equivalent pressure simulating the effect of the weight of the top lid is an external pressure of 3 psi, which reduces the pressure difference across the top lid to 97 psi. The dead weight of the top lid is neglected to provide additional conservatism in the results. The dead weight of the

baseplate, however, adds approximately 0.73 psi to the effective internal pressure acting on the base. The effect of dead weight is still insignificant compared to the 100 psi design pressure, and is therefore neglected. The thermal loading in the confinement vessel is obtained by developing a parabolic temperature profile to the entire length of the MPC canister and to the top lid and baseplate. The temperature data provided at locations A-I in Figure 3.4.11 and 3.4.12 are sufficient to establish the profiles. Through-thickness temperatures are assumed linearly interpolated between top and bottom surfaces of the top lid and baseplate.

Finally, in the analysis, all material properties and expansion coefficients are considered to be temperature-dependent in the model.

Results for stress intensity are reported for the case of internal pressure alone and for the combined loading of pressure plus temperature (Load Case E1.c in Table 3.1.4). Tables 3.4.7 and 3.4.8 report results at the inside and outside surfaces of the top lid and baseplate at the centerline and at the extreme radius. Canister results are reported in the "bending boundary layer" and at a location near mid-length of the MPC canister. In the tables, the calculated value is the value from the finite element analysis, the categories are P_m = primary membrane; $P_L + P_b$ = local membrane plus primary bending; and $P_L + P_b + Q$ = primary plus secondary stress intensity. The allowable strength value is obtained from the appropriate table in Section 3.1 for Level A conditions, and the safety factor SF is defined as the allowable strength divided by the calculated value. Allowable strengths for Alloy X are taken at *550~~300~~* degrees F, *400 degrees F, and 500 degrees F, respectively, for the MPC lid, baseplate, and canister shell* ~~at the bottom of the MPC and 500 degrees F at the top of the MPC. These temperatures reflect actual operating conditions per Table 4.4.19.~~ The results given in Tables 3.4.7 and 3.4.8 demonstrate the ruggedness of the MPC as a confinement boundary.

The results in Table 3.4.7 and 3.4.8 also show that the baseplate and the shell connection to the baseplate are the most highly stressed regions under the action of internal pressure. To confirm the finite element results, we perform an alternate closed form solution using classical plate and shell theory equations that are listed in or developed from the reference (Timoshenko and Woinowsky-Krieger, Theory of Plate and Shells, McGraw Hill, Third Edition).

Assuming that the thick baseplate receives little support against rotation from the thin shell, the bending stress at the centerline is evaluated by considering a simply supported plate of radius a and thickness h, subjected to lateral pressure p. The maximum bending stress is given by

$$\sigma = \frac{3(3+\nu)}{8} p \left(\frac{a}{h}\right)^2$$

where:

a = .5 x 68.375"

h = 2.5"

ν = 0.3 (Poisson's Ratio)

$p = \quad 100$ psi

Calculating the stress in the plate gives $\sigma = 23{,}142$ psi.

Now consider the thin MPC shell (t = 0.5") and first assume that the baseplate provides a clamped support to the shell. Under this condition, the bending stress in the thin shell at the connection to the plate is given as

$$\sigma_{Bp} = 3p\frac{a}{t}\frac{(1-\nu/2)}{\sqrt{3}\,(1-\nu^2)^{1/2}} = 10{,}553 \text{ psi}$$

In addition to this stress, there is a component of stress in the shell due to the baseplate rotation that causes the shell to rotate. The joint rotation is essentially driven by the behavior of the baseplate as a simply supported plate; the shell offers little resistance because of the disparity in thickness and will essentially follow the rotation of the thick plate.

Using formulas from thin shell theory, the additional axial bending stress in the shell due to this rotation θ can be written in the form

$$\sigma_{B\theta} = 12\,\beta\,D_s\frac{\theta}{t^2}$$

where

$$\theta = pa^3/8D(1+\nu)*\left(1/_{1+\alpha}\right)$$

and

$$D = \frac{Eh^3}{12(1-\nu^2)} \qquad E = \text{plate Young's Modulus}$$

$$\alpha = \frac{2\beta a t^3}{h^3(1+\nu)}$$

$$D_s = \frac{E t^3}{12(1-\nu^2)}$$

$$\beta^2 = \sqrt{3(1-\nu^2)}/at$$

Substituting the numerical values gives

$$\sigma_{B\theta} = 40{,}563 \text{ psi}$$

We note that the approximate solution is independent of the value chosen for Young's Modulus as long as the material properties for the plate and shell are the same.

Combining the two contributions to the shell bending stress gives the total extreme fiber stress in the longitudinal direction as 51,116 psi.

The baseplate stress value, 23,142 psi, compares well with the finite element result *20,601*~~20,528~~ psi (Table 3.4.7). The shell joint stress, 51,116 psi, is greater than the finite element result (*43,645*~~43,986~~ psi in Table 3.4.7). This is due to the local effects of the shell-to-baseplate connection offset. That is, the connection between shell and baseplate in the finite element model is at the surface of the baseplate, not at the middle surface of the baseplate. This offset will cause an additional bending moment that will reduce the rotation of the plate and hence, reduce the stress in the shell due to the rotation of the baseplate.

In summary, the approximate closed form solution confirms the accuracy of the finite element analysis in the baseplate region.

From Table 2.2.1, the off-normal design internal pressure is 110 psi, or ten percent greater than the normal design pressure. Whereas Level A service limits are used to establish allowables for the normal design pressure, Level B service limits are used for off-normal loads. Since Subsection NB of the ASME Code permits an identical 10% increase in allowable stress intensity values for primary stress intensities generated by Level B Service Loadings, it stands to reason that the safety factors reported in Tables 3.4.7 and 3.4.8 bound the case of off-normal design internal pressure.

Under the accident pressure, the MPC baseplate experiences bending. Table NB-3217-1 permits the bending stress at the outer periphery of the baseplate and in the shell wall at the connection to be considered as a secondary bending stress if the primary bending stress at the center of the baseplate can be shown to meet the stress limits without recourse to the restraint provided by the MPC shell. To this end, the bending stress at the center of the baseplate is computed in a conservative manner assuming the baseplate is simply supported at the periphery. The bending stress for a simply supported circular plate is

$$\sigma = (9/8)p\left(r/t\right)^2$$

At the accident pressure, conservatively set at twice the normal operating pressure, the maximum stress is:

Bending stress at center of baseplate = 46,284 psi

Since this occurrence is treated as a Level D event, the stress intensity is compared with the limit from Table 3.1.14 and the safety factor computed as, "SF", where

SF = 67,49,300 psi/(46,284+200) psi = 1.459

3.4.4.3.1.3 Elastic Stability and Yielding of the MPC Basket under Compression Loads (Load Case F3 in Table 3.1.3)

This load case corresponds to the scenario wherein the loaded MPC is postulated to drop causing a compression state in the fuel basket panels.

a. Elastic Stability

Following the provisions of Appendix F of the ASME Code [3.4.3] for stability analysis of Subsection NG structures, (F-1331.5(a)(1)), a comprehensive buckling analysis is performed using ANSYS. For this analysis, ANSYS's large deformation capabilities are used. This feature allows ANSYS to account for large nodal rotations in the fuel basket, which are characteristic of column buckling. The interaction between compressive and lateral loading, caused by the deformation, is exactly included. Subsequent to the large deformation analysis, the basket panel that is most susceptible to buckling failure is identified by a review of the results. The lateral displacement of a node located at the mid-span of the panel is measured for the range of impact decelerations. The buckling or collapse load is defined as the impact deceleration for which a slight increase in its magnitude results in a disproportionate increase in the lateral displacement.

The stability requirement for the MPC fuel basket under lateral loading is satisfied if two-thirds of the collapse deceleration load is greater than the design basis horizontal acceleration (Table 3.1.2). This analysis was performed for the HI-STAR 100 submittal (Docket Number 72-1008) under a 60g deceleration loading. Within the HI-STAR 100 FSAR (Docket Number 72-1008), Figures 3.4.27 through 3.4.32 are plots of lateral displacement versus impact deceleration for the MPC-24, MPC-32, and MPC-68. It should be noted that the displacements (in the HI-STAR 100 FSAR) in Figures 3.4.27 through 3.4.31 are expressed in 1×10^{-1} inch and Figure 3.4.32 is expressed in 1×10^{-2} inch. The plots in the HI-STAR 100 FSAR clearly show that the large deflection collapse load of the MPC fuel basket is greater than 1.5 times the design basis deceleration for all baskets in all orientations. The results for the MPC-24Eare similar. Thus, the requirements of Appendix F are met for lateral deceleration loading under Subsection NG stress limits for faulted conditions.

An alternative solution for the stability of the fuel basket panel is obtained using the methodology espoused in NUREG/CR-6322 [3.4.13]. In particular, we consider the fuel basket panels as wide plates in accordance with Section 5 of NUREG/CR-6322. We use eq.(19) in that section with the "K" factor set to the value appropriate to a clamped panel. Material properties are selected corresponding to a metal temperature of 500 degrees F which bounds computed metal temperatures at the periphery of the basket. In general, the basket periphery sees the largest loading in an impact scenario. The critical buckling stress is:

$$\sigma_{cr} = \left(\pi / K \right)^2 \frac{E}{12\left(1-\nu^2\right)} \left(\frac{h}{a}\right)^2$$

where h is the panel thickness, a is the unsupported panel length, E is the Young's Modulus of Alloy X at 500 degrees F, ν is Poisson's Ratio, and K=0.65 (per Figure 6 of NUREG/CR-6322).

The MPC-24 has a small h/a ratio; the results of the finite element stress analyses under design basis deceleration load show that this basket is subject to the highest compressive load in the panel. Therefore, the critical buckling load is computed using the geometry of the MPC-24. The following table shows the results from the finite element stress analysis and from the stability calculation.

Panel Buckling Results From NUREG/CR-6322			
Item	**Finite Element Stress (ksi)**	**Critical Buckling Stress (ksi)**	**Factor of Safety**
Stress	12.585	45.32	3.601

For a stainless steel member under an accident condition load, the recommended safety factor is 2.12. We see that the calculated safety factor exceeds this value; therefore, we have independently confirmed the stability predictions of the large deflection analysis based on classical plate stability analysis by employing a simplified method.

Stability of the basket panels, under longitudinal deceleration loading, is demonstrated in the following manner. Under 60g deceleration in Docket Number 72-1008, the axial compressive stress in the baskets were computed for the MPC-24, 68, and 32, as:

MPC-24	3,458 psi
MPC-68	3,739 psi
MPC-32	4,001 psi

For the 45g design basis decelerations for HI-STORM 100, the basket axial stresses are reduced by 25%.

The above values represent the amplified weight, including the nonstructural sheathing and the *neutron absorber material*~~Boral~~, divided by the bearing area resisting axial movement of the basket. To demonstrate that elastic instability is not a concern, the buckling stress for an MPC-24 flat panel is computed.

For elastic stability, Reference [3.4.8] provides the formula for critical axial stress as

$$\sigma_{cr} = \frac{4\pi^2 E}{12(1-\nu^2)}\left(\frac{T}{W}\right)^2$$

where T is the panel thickness and W is the width of the panel, E is the Young's Modulus at the metal temperature and ν is the metal Poisson's Ratio. The following table summarizes the calculation for the critical buckling stress using the formula given above:

Elastic Stability Result for a Flat Panel	
Reference Temperature	725 degrees F
T (MPC-24)	5/16 inch
W	10.777 inch
E	24,600,000 psi
Critical Axial Stress	74,781 psi

It is noted the critical axial stress is an order of magnitude greater than the computed basket axial stress reported in the foregoing and demonstrates that elastic stability under longitudinal deceleration load is not a concern for any of the fuel basket configurations.

b. Yielding

The safety factor against yielding of the basket under longitudinal compressive stress from a design basis inertial loading is given, using the results for the MPC-32, by

SF = 17,100/4,001 = 4.274

Therefore, plastic deformation of the fuel basket under design basis deceleration is not credible.

3.4.4.3.1.4 MPC Baseplate Analysis (Load Case E2)

A bounding analysis is performed in the HI-STAR 100 FSAR (Docket Number 72-1008, Appendix 3.I) to evaluate the stresses in the MPC baseplate during the handling of a loaded MPC. The stresses in the MPC baseplate calculated in that appendix are compared to Level A stress limits and remain unchanged whether the overpack is HI-STAR 100, HI-STORM 100, or HI-TRAC. Therefore, no new analysis is needed. We have reported results for this region in Subsection 3.4.3 where an evaluation has been performed for stresses under three times the supported load.

3.4.4.3.1.5 Analysis of the MPC Top Closure (Load Case E2)

The FSAR for the HI-STAR 100 System (Docket Number 72-1008, Appendix 3.E) contains stress analysis of the MPC top closure during lifting. Loadings in that analysis are also valid for the HI-STORM 100 System. *From Table 2.2.1, the off-normal design internal pressure is 110 psi, or ten percent greater than the normal design pressure. Whereas Level A service limits are used to establish allowables for the normal design pressure, Level B service limits are used for off-normal loads. Since Subsection NB of the ASME Code permits an identical 10% increase in allowable stress intensity values for primary stress intensities generated by Level B Service Loadings, it stands to reason that the safety factors reported for normal pressure are also valid for the case of off-normal design internal pressure.*

3.4.4.3.1.6 Structural Analysis of the Fuel Support Spacers (Load Case E3.a)

Upper and lower fuel support spacers are utilized to position the active fuel region of the spent nuclear fuel within the poisoned region of the fuel basket. It is necessary to ensure that the spacers will continue to maintain their structural integrity after an accident event. Ensuring structural integrity implies that the spacer will not buckle under the maximum compressive load, and that the maximum compressive stress will not exceed the compressive strength of the spacer material (Alloy X). Detailed calculations in Docket Number 72-1008, Appendix 3.J, demonstrate that large structural margins in the fuel spacers are available for the entire range of spacer lengths which may be used in HI-STORM 100 applications (for the various acceptable fuel types). The calculations for the HI-STORM 100 45g load are bounded by those for the HI-STAR 100 60g load.

3.4.4.3.1.7 External Pressure (Load Case E1.b, Table 3.1.4)

The d~~D~~esign external pressure *for* ~~is applied to~~ the MPC *is zero psi.*~~model~~. The outer surface of the MPC shell is *conservatively* subject to *a net* external pressure *of 2 psi.* ~~The magnitude of the external pressure applied to the model is taken from Table 2.2.1.~~ *The methodology for a*Analysis of the MPC under thi*s*e external pressure is provided in the HI-STAR 100 FSAR Docket Number 72-1008. *Using the identical methodology with input loads and decelerations appropriate to the HI-STORM, safety factors > 1.0 are obtained for all relevant load cases.* ~~(Appendix 3.H) and therefore, is not repeated here~~.

3.4.4.3.1.8 Miscellaneous MPC Structural Evaluations

Calculations are performed to determine the minimum fuel basket weld size, the capacity of the sheathing welds, the stresses in the MPC cover plates, and the stresses in the fuel basket angle supports. The following paragraphs briefly describe each of these evaluations.

The fillet welds in the fuel basket honeycomb are made by an autogenous operation that has been shown to produce highly consistent and porosity free weld lines. However, Subsection NG of the ASME Code permits only 40% quality credit on double fillet welds which can be only visually examined (Table NG-3352-1). Subsection NG, however, fails to provide a specific stress limit on such fillet welds. In the absence of a Code mandated limit, Holtec

International's standard design procedure requires that the weld section possess as much load resistance capability as the parent metal section. Since the loading on the honeycomb panels is essentially that of section bending, it is possible to develop a closed form expression for the required weld throat thickness "t" corresponding to panel thickness "h".

The sheathing is welded to the fuel basket cell walls to protect and position the neutron absorber material. Force equilibrium relationships are used to demonstrate that the sheathing weld is adequate to support a 45g deceleration load applied vertically and horizontally to the sheathing and the confined neutron absorber material. The analysis assumes that the weld is continuous and then modifies the results to reflect the amplification due to intermittent welding.

The MPC cover plates are welded to the MPC lid during loading operations. The cover plates are part of the confinement boundary for the MPC. No credit is taken for the pressure retaining abilities of the quick disconnect couplings for the MPC vent and drain. Therefore, the MPC cover plates must meet ASME Code, Section III, Subsection NB limits for normal, off-normal, and accident conditions. Conservatively, the accident condition pressure loading is applied, and it is demonstrated that the Level A limits for Subsection NB are met.

The fuel basket internal to the MPC canister is supported by a combination of angle fuel basket supports and flat plate or solid bar fuel basket supports. These fuel basket supports are subject to significant load only when a lateral acceleration is applied to the fuel basket and the contained fuel. The quasi-static finite element analyses of the MPC's, under lateral inertia loading, focused on the structural details of the fuel basket and the MPC shell. Basket supports were modeled in less detail, which served only to properly model the load transfer path between fuel basket and canister. Safety factors reported for the fuel basket supports from the finite element analyses, are overly conservative, and do not reflect available capacity of the fuel basket angle support. A strength of materials analysis of the fuel basket angle supports is performed to complement the finite element results. The weld stresses are computed at the support-to-shell interface, and membrane and bending stresses in the basket support angle plate itself. Using this strength of materials approach, we demonstrate that the safety factors for the fuel basket angle supports are larger than indicated by the finite element analysis.

The results of these evaluations are summarized in the tables below.

Minimum Weld Sizes for Fuel Baskets			
Basket Type	*Panel Thickness (h), in*	*t/h Ratio*	*Minimum Weld Size (t), in*
MPC-24	*5/16*	*0.57*	*0.178*
MPC-68	*1/4*	*0.516*	*0.129*
MPC-32	*9/32*	*0.57*	*0.160*
MPC-24E	*5/16*	*0.455*	*0.142*

Miscellaneous Stress Results for MPC			
Item	*Stress (ksi)*	*Allowable Stress (ksi)*	*Safety Factor*
Shear Stress in Sheathing Weld	*2.968*	*27.93*	*9.41*
Bending Stress in MPC Cover Plate	*17.60*	*24.425*0.967*	*1.349*
Shear Stress in MPC Cover Plate Weld	*3.145*	*18.99*0.967*	*5.846.04*
Shear Stress in Fuel Basket Support Weld	*4.711*	*9.408*	*2.00*
Combined Stress in Fuel Basket Support Plates	*32.393*	*59.1*	*1.82*

Note: 0.967 reflects increase in MPC shell design temperature to 500 deg. F

3.4.4.3.1.9 *Structural Integrity of Damaged Fuel Containers*

The damaged fuel containers or canisters (DFCs) to be deployed in the HI-STAR 100 System transport package have been evaluated to demonstrate that the containers are structurally adequate to support the mechanical loads postulated during normal lifting operations, while in long-term storage, and during a hypothetical end drop. The evaluations address the following damaged/failed fuel containers for transportation in the HI-STAR 100 System:

- *Holtec-designed MPC-24E (PWR) DFC*
- *Holtec-designed MPC-68 (BWR) DFC*
- *Transnuclear-designed DFC for Dresden Unit 1 fuel*
- *Transnuclear-designed Thoria Rod Canister for Dresden Unit 1*

The structural load path in each of the analyzed containers is evaluated using basic strength of materials formulations. The various structural components are modeled as axial or bending members and their stresses are computed. Depending on the particular DFC, the load path includes components such as the container sleeve and collar, various weld configurations, load tabs, closure components and lifting bolts. Axial plus bending stresses are computed, together with applicable bearing stresses and weld stresses. Comparisons are then made with the appropriate allowable strengths at temperature. Input data for all DFCs comes from the applicable drawings. The design temperature for lifting evaluations is set at 150°F (since the DFC is in the spent fuel pool). The design temperature for accident conditions is set at 725°F.

The upper closure assembly must meet the requirements set forth for special lifting devices used in nuclear applications [3.1.2]. The remaining components of the damaged fuel container are governed by the stress limits of the ASME Code Section III, Subsection NG [3.4.10] and Section III, Appendix F [3.4.3], as applicable.

The following table presents the minimum safety factors, from all of the stress computations, for each of the above listed DFCs.

DFC Type	*Loading Condition – DFC Component*	*Calculated Stress (ksi)*	*Allowable Stress (ksi)*	*Safety Factor = (Allowable Stress) / (Calculated Stress)*	*Remarks*
Holtec-designed MPC-24E (PWR) DFC	*Normal Lift – Lifting Bolt*	*24.99*	*27.00*	*1.08*	*ANSI N14-6 stress limit*
	60g End Drop – Baseplate-to-Container Sleeve Welds	*3.95*	*26.59*	*6.73*	*ASME Level D stress limit*
Holtec-designed MPC-68 (BWR) DFC	*Normal Lift – Lifting Bolt-to-Top Plate Weld*	*5.80*	*12.00*	*2.07*	*ASME Level A stress limit*
	60g End Drop – Baseplate-to-Container Sleeve Welds	*1.59*	*26.59*	*16.7*	*ASME Level D stress limit*
Transnuclear-designed DFC for Dresden Unit 1	*Normal Lift – Lid Frame Assembly*	*0.527*	*4.583*	*8.70*	*Bearing stress*
	60g End Drop – Bottom Assembly	*12.32*	*37.92*	*3.08*	*ASME Level D stress limit*
Transnuclear-designed Thoria Rod Canister for Dresden Unit 1	*Normal Lift – Lid Frame Assembly*	*0.373*	*4.583*	*12.3*	*Bearing stress*
	60g End Drop – Bottom Assembly	*8.73*	*37.92*	*4.34*	*ASME Level D stress limit*

The table above demonstrates that the DFCs are structurally adequate to support the mechanical loads postulated during normal lifting operations and during a hypothetical end drop. Moreover, since the HI-STAR design basis handling accident bounds the corresponding load for HI-STORM (60g vs. 45g), the DFCs can be carried safely in both the HI-STAR and HI-STORM Systems.

3.4.4.3.2 HI-STORM 100 Storage Overpack Stress Calculations

The structural functions of the storage overpack are stated in Section 3.1. The analyses presented here demonstrate the ability of components of the HI-STORM 100 storage overpack to perform their structural functions in the storage mode. Load Cases considered are given in Table 3.1.5. The nomenclature used to identify the load cases (Load Case Identifier) considered is also given in Table 3.1.5.

The purpose of the analyses is to provide the necessary assurance that there will be no unacceptable release of radioactive material, unacceptable radiation levels, or impairment of ready retrievability of the MPC from the storage overpack. Results obtained using the HI-STORM 100 configuration are identical to or bound results for the HI-STORM 100S configuration.

3.4.4.3.2.1 HI-STORM 100 Compression Under the Static Load of a Fully Loaded HI-TRAC Positioned on the Top of HI-STORM 100 (Load Case 01 in Table 3.1.5)

During the loading of HI-STORM 100, a HI-TRAC transfer cask with a fully loaded MPC may be placed on the top of a HI-STORM 100 storage overpack. During this operation, the HI-TRAC may be held by a single-failure-proof lifting device so a handling accident is not credible. The HI-STORM 100 storage overpack must, however, possess the compression capacity to support the additional dead load. The following analysis provides the necessary structural integrity demonstration; results for the HI-STORM 100 overpack are equal to or bound those for the HI-STORM 100S.

Define the following quantities for analysis purposes:

W_{HT} = Bounding weight of HI-TRAC 125D (loaded w/ MPC-32) = 233,000 lb (Table 3.2.2)

W_{MD} = Weight of mating device = 15,000 lb

$W_{TOTAL} = W_{HT} + W_{MD}$ = 248,000 lb

The total weight of the HI-TRAC 125D plus the mating device is greater than the weight of a loaded HI-TRAC 125 with the transfer lid. Therefore, the following calculations use the weight for the HI-TRAC 125D as input.

The dimensions of the compression components of HI-STORM 100 are as follows:

outer diameter of outer shell =	D_o = 132.5"
thickness of outer shell =	t_o = 0.75"
outer diameter of inner shell =	D_i = 76"
thickness of inner shell =	t_i = 1.25"
thickness of radial ribs =	t_r = 0.75"

The metal area of the outer metal shell is

$$A_o = \frac{\pi}{4}(D_o^2 - (D_o - 2t_o)^2) = \frac{\pi}{4}(132.5^2 - 131^2)$$
$$= 310.43\ \text{in}^2$$

The metal area of the radial ribs is

$$A_r = 4t_r(D_o - 2t_o - D_i)/2 = \frac{3}{2}(131 - 76) = 82.5\ \text{in}^2$$

The metal area of the inner shell is

$$A_i = \frac{\pi}{4}(D_i^2 - (D_i - 2t_i)^2) = \frac{\pi}{4}(76^2 - 73.5^2)$$
$$= 293.54\ in^2$$

There are four radial ribs that extend full length and can carry load. The concrete radial shield can also support compression load. The area of concrete available to support compressive loading is

$$A_{concrete} = \frac{\pi}{4}((D_o - 2t_o)^2 - (D_i)^2) - A_r$$
$$= \frac{\pi}{4}(131^2 - 76^2) - 82.5\ in^2$$
$$= (8{,}994 - 82.5)\ in^2 = 8{,}859.5\ in^2$$

The areas computed above are calculated at a section below the air outlet vents. To correct the above areas for the presence of the air outlet vents (HI-STORM 100 only since HI-STORM 100S has the air outlet vents located in the lid), we note that Bill-of-Materials 1575 in Chapter 1 gives the size of the horizontal plate of the air outlet vents as:

Peripheral width = w = 16.5"
Radial depth = d = 27.5" (over concrete in radial shield)

Using these values, the following final areas are obtained:

$A_o = A_o(\text{no vent}) - 4t_o w = 260.93$ sq. inch

$A_i = A_i(\text{no vent}) - 4t_i w = 211.04$ sq. inch

$A_{concrete} = A_{concrete}(\text{no vent}) - 4dw = 7044.2$ sq. inch

The loading case is a Level A load condition. The load is apportioned to the steel and to the concrete in accordance with the values of EA for the two materials (E(steel) = 28,000,000 psi and E(concrete)=3,605,000 psi).

$$EA(steel) = 28x10^6\ psi\ x\ (260.93 + 211.04 + 82.5)in^2$$
$$= 15{,}525.2\ lb\ x\ 10^6\ lbs.$$

EA(concrete) =3.605 x 10^6 x (7044.2) in^2
= 25,394.3 x 10^6 lb.

Therefore, the total HI-TRAC load will be apportioned as follows:

F_{STEEL} = (15,525.2/40,919.5) x 248,000 = 94,093.2 lb.

$F_{CONCRETE}$ = (25,394.3/40,919.5) x 248,000 = 153,906.7 lb.

Therefore, if the load is apportioned as above, with all load-carrying components in the path acting, the compressive stress in the steel is

If we conservatively neglect the compression load bearing capacity of concrete, then

$$\sigma_{STEEL} = \frac{248{,}000}{554.5} = 447.2 \text{ psi}$$

If we include the concrete, then the maximum compressive stress in the concrete is:

$$\sigma_{CONCRETE} = \frac{F_{CONCRETE}}{A_{CONCRETE}} = 21.8 \text{ psi}$$

It is clear that HI-STORM 100 storage overpack can support the dead load of a fully loaded HI-TRAC 125D and the mating device placed on top for MPC transfer into or out of the HI-STORM 100 storage overpack cavity. The calculated stresses at a cross-section through the air outlet ducts are small and give rise to large factors of safety. The metal cross-section at the base of the HI-STORM storage overpack will have a slightly larger metal area (because the width of the air-inlet ducts is smaller) but will be subject to additional dead load from the weight of the supported metal components of the HI-STORM storage overpack plus the loaded HI-TRAC weight. At the base of the storage overpack, the additional stress in the outer shell and the radial plates is due solely to the weight of the component. Based on the maximum concrete density, the additional stress in these components is computed as:

$\Delta\sigma$ = (160.8 lb./cu.ft.) x 18.71 ft./144 sq.in./sq.ft. = 20.9 psi

This stress will be further increased by a small amount because of the material cut away by the air-inlet ducts; however, the additional stress still remains small. The inner shell, however, is subject to additional loading from the top lid of the storage overpack and from the radial shield. From the Structural Calculation Package (HI-981928)(see Subsection 3.6.4 for the reference), and from Table 3.2.1, the following weights are obtained (using the higher 100S lid weight):

HI-STORM 100S Top Lid weight < 25,500 lb.
HI-STORM 100 Inner Shell weight < 19,000 lb.
HI-STORM 100 Shield Shell weight < 11,000 lb.

Note that the shield shell was removed from the HI-STORM 100 design as of June, 2001. However, it is conservative to include the shield shell weight in the following calculations.

Using the calculated inner shell area at the top of the storage overpack for conservatism, gives the metal area of the inner shell as:

$A_i = A_i(\text{no vent}) - 4t_iw = 211.04$ sq. inch

Therefore, the additional stress from the HI-STORM 100S storage overpack components, at the base of the overpack, is:

$\Delta\sigma = 263$ psi

and a maximum compressive stress in the inner shell predicted as:

Maximum stress = 447 psi + 263 psi = 710 psi

The safety factor at the base of the storage overpack inner shell (minimum section) is

SF = 17,500psi/710 psi = 24.6

The preceding analysis is bounding for the 100 Ton HI-TRAC transfer cask because of the lower HI-TRAC weight.

The preceding analysis is valid for both the HI-STORM 100 and the HI-STORM 100S since the bounding lid weight has been used.

3.4.4.3.2.2 <u>HI-STORM 100 Lid Integrity Evaluation (Load Case 02.c, Table 3.1.5)</u>

A non-mechanistic tip over of the HI-STORM 100 results in high decelerations at the top of the storage overpack. The storage overpack lid diameter is less than the storage overpack outer diameter. This ensures that the storage overpack lid does not directly strike the ground but requires analysis to demonstrate that the lid remains intact and does not separate from the body of the storage overpack. Figure 3.4.19 shows the scenario.

The HI-STORM 100 overpack has two lid designs, which rely on different mechanisms to resist separation from the overpack body. The original design relies solely on the lid studs to resist the shear and axial loads on the lid. In the new design, the bolt holes are enlarged and a shear ring is welded to the underside of the lid top plate. These changes insure that the lid studs only encounter axial (tensile) loads. The in-plane load is resisted by the shear ring as it bears against the top plate. The HI-STORM 100S has only one lid design, which utilizes a shear ring. Calculations have been performed for both HI-STORM 100 lid configurations, as well as the HI-STORM 100S lid geometry, to demonstrate that the lid can withstand a non-mechanistic tip-over.

~~Specifically, Appendix 3.K presents details of the HI-STORM 100 lid response to the tip-over deceleration based on the original design (i.e., no shear ring).~~ The deceleration level for the non-mechanistic tip-over bounds all other decelerations, directed in the plane of the lid, experienced under other accident conditions such as flood or earthquake as can be demonstrated by evaluating the loads resulting from these natural phenomena events.

~~Appendix 3.L presents the original calculations that demonstrate that the four studs hold the storage overpack lid in place, relative to the HI-STORM 100 body, for a postulated non-mechanistic HI-STORM 100 tip-over event.~~ It is shown that the weight of the HI-STORM 100 lid, amplified by the design basis deceleration, can be supported entirely by the shear capacity available in the four studs[†]. ~~The detailed calculations in Appendix 3.L demonstrate that i~~If only a single stud is loaded initially during a tipover (because of tolerances), the stud hole will enlarge rather than the stud fail in shear. Therefore, it is assured that all four bolts will resist the tipover load regardless of the initial position of the HI-STORM 100 lid.

The following tables summarize the limiting results obtained from the detailed analyses ~~in Appendices 3.K and 3.L~~, and from the similar detailed analysis for the HI-STORM 100 lid with shear ring and for the HI-STORM 100S(243). The results for the HI-STORM 100S(243) bound the results for the shorter HI-STORM 100S(232).

HI-STORM 100 Top Lid Integrity (No Shear Ring)			
Item	**Value (ksi)**	**Allowable (ksi)**	**Safety Factor**
Lid Shell-Lid Top Plate Weld Shear Stress	6.733	29.4	4.367
Lid Shell-Lid Top Plate Combined Stress	9.11	29.4	3.226
Attachment Bolt Shear Stress	44.82	60.9	1.359
Attachment Bolt Combined Shear and Tension Interaction at Interface with Anchor Block	——	——	1.21

† The tip-over event is non-mechanistic by definition since the HI-STORM 100 System is designed to preclude tip-over under all normal, off-normal, and accident conditions of storage, including extreme natural phenomena events. Thus, the tip-over event cannot be categorized as an operating or test condition as contemplated by ASME Section III, Article NCA-2141. The bolted connection between the overpack top lid and the overpack body provided by the top lid studs and nuts serves no structural function during normal or off-normal storage conditions, or for credible accident events. Therefore, the ASME Code does not apply to the construction of the HI-STORM top plate-to-overpack connection (the lid studs, nuts, and the through holes in the top plate). However, for conservatism, the stress limits from ASME III, Subsection NF are used for the analysis of the lid bolts ~~in Appendix 3.L~~.

HI-STORM 100 Top Lid Integrity (With Shear Ring)			
Item	Value (ksi)	Allowable (ksi)	Safety Factor
Lid Top Plate-to-Lid Shell Weld Combined Stress	7.336	29.4	4.007
Shield Block Shells-to-Lid Top Plate Weld Combined Stress	1.768	29.4	16.63
Attachment Bolt Tensile Stress	28.02	107.13	3.823
Shear Ring-to-Lid Top Plate Weld Stress	32.11	40.39	1.258
Shear Ring Bearing Stress	25.43	63.0	2.477
Top Plate-to-Outer Shell Weld Stress	35.61	40.39	1.134

HI-STORM 100S(243) Top Lid Integrity			
Item	Value (ksi)	Allowable (ksi)	Safety Factor
Inner and Outer Shell Weld to Base	15.98	29.4	1.840
Shield Block Shell-to-Lid Weld Shear Stress	5.821	29.4	5.051
Shield Block Shell Stress	5.975	29.4	4.921
Attachment Bolt Tensile Stress	34.04	107.13	3.147
Shear Ring-to Overpack Shell Weld Stress	30.27	42.0	1.388
Shear Ring Bearing Stress	17.63	63.0	3.573
Lid Shell Ring-to-Shear Ring Weld Stress	19.01	42.0	2.209

3.4.4.3.2.3 Vertical Drop of HI-STORM 100 Storage overpack (Load Case 02.a of Table 3.1.5)

A loaded HI-STORM 100, with the top lid in place, drops vertically and impacts the ISFSI. Figure 3.4.20 illustrates the drop scenario. The regions of the structure that require detailed examination are the storage overpack top lid, the inlet vent horizontal plate, the pedestal shield, the inlet vent vertical plate, and all welds in the load path. *These components are examined for* ~~Appendix 3.M examines~~ the Level D event of a HI-STORM 100 drop developing the design basis deceleration.

The table provided below summarizes the results of the analyses ~~detailed in Appendix 3.M~~ for the weight and configuration of the HI-STORM 100. The results for the HI-STORM 100S are bounded by the results given below. Any calculation pertaining to the pedestal is bounding since the pedestal dimensions and corresponding weights are less in the HI-STORM 100S.

HI-STORM 100 Load Case 02.a Evaluation			
Item	**Value (ksi)**	**Allowable (ksi)**	**Safety Factor**
Lid Bottom Plate Bending Stress Intensity	6.02	59.65	9.908†
Weld- lid bottom plate-to-lid shell	10.91	29.4	2.695
Lid Shell – Membrane Stress Intensity	1.90	39.75	20.92
Lid Top (2" thick) Plate Bending Stress Intensity	11.27	59.65	5.293*
Inner Shell –Membrane Stress Intensity	8.88	39.75	4.476
Outer Shell –Membrane Stress Intensity	3.401	39.75	11.686
Inlet Vent Horizontal Plate Bending Stress Intensity	37.14	59.65	1.606
Inlet Vent Vertical Plate Membrane Stress Intensity	10.34	39.75	3.844
Pedestal Shield – Compression	1.252	1.266	1.011
Weld – outer shell-to-baseplate	4.133	29.4	7.116
Weld – inner shell-to-baseplate	5.896	29.4	4.987
Weld-Pedestal shell-to-baseplate	4.563	29.4	6.444

† Note that ~~Appendix 3.X shows that~~ the dynamic load factor for the lid top plate is negligible and for the lid bottom plate is 1.06. This dynamic load factor has been incorporated in the above table.

* For the HI-STORM 100S, this safety factor is conservatively evaluated ~~in Appendix 3.M~~ to be 1.625 because of increased load on the upper of the two lid plates.

~~Appendix 3.AK contains a~~An assessment of the potential for instability of the compressed inner and outer shells under the compressive loading during the drop event *has also been performed.* The methodology is from ASME Code Case N-284 (Metal Containment Shell Buckling Design Methods, Division I, Class MC (8/80)). This Code Case has been previously accepted by the NRC as an acceptable method for evaluation of stability in vessels. The results obtained are conservative in that the loading in the shells is assumed to be uniformly distributed over the entire length of the shells. In reality, the component due to the amplified weight of the shell varies from zero at the top of the shell to the maximum value at the base of the shell. It is concluded ~~in Appendix 3.AK~~ that large factors of safety exist so that elastic or plastic instability of the inner and outer shells does not provide a limiting condition. The results for the HI-STORM 100 bound similar results for the HI-STORM 100S since the total weight of the "S" configuration is decreased (see Subsection 3.2).

The results ~~from Appendix 3.M and 3.AK~~ do not show any gross regions of stress above the material yield point that would imply the potential for gross deformation of the storage overpack subsequent to the handling accident. MPC stability has been evaluated in the HI-STAR 100 FSAR for a drop event with 60g deceleration and shown to satisfy the Code Case N-284 criteria. Therefore, ready retrievability of the MPC is maintained as well as the continued performance of the HI-STORM 100 storage overpack as the primary shielding device.

3.4.4.3.3 HI-TRAC Transfer Cask Stress Calculations

The structural functions of the transfer cask are stated in Section 3.1. The analyses presented here demonstrate the ability of components of the HI-TRAC transfer cask to perform their structural functions in the transfer mode. Load Cases considered are given in Table 3.1.5.

The purpose of the analyses is to provide the necessary assurance that there will be no unacceptable release of radioactive material, unacceptable radiation levels, or impairment of ready retrievability.

3.4.4.3.3.1 Analysis of Pocket Trunnions (Load Case 01 of Table 3.1.5)

The HI-TRAC 125 and HI-TRAC 100 transfer casks have pocket trunnions attached to the outer shell and to the water jacket. During the rotation of HI-TRAC from horizontal to vertical or vice versa (see Figure 3.4.18), these trunnions serve to define the axis of rotation. The HI-TRAC is also supported by the lifting trunnions during this operation. Two load conditions are considered: Level A when all four trunnions support load during the rotation; and, Level B when the hoist cable is assumed slack so that the entire load is supported by the rotation trunnions. A dynamic amplification of 15% is assumed in both cases appropriate to a low-speed operation. ~~Appendices 3.AA and 3.AI (for the HI-TRAC 125 and HI-TRAC 100, respectively) present the analysis of the pocket trunnion.~~ Figure 3.4.23 shows a free body of the trunnion and shows how the applied force and moment are assumed to be resisted by the weld group that connects the trunnion to the outer shell. Drawings 1880 (sheet 10) and 2145 (sheet 10) show the configuration. An optional construction for the HI-TRAC 100 permits the pocket trunnion base to be split to reduce the "envelope" of the HI-TRAC. For that construction, bolts and dowel pins are used to insure that the force and moment applied to the pocket trunnions are transferred properly to the body of the transfer cask. *The analysis* ~~Appendix 3.AI~~ also evaluates the bolts and dowel pins and demonstrates that safety factors greater than 1.0 exist for bolt loads, dowel bearing and tear-out, and dowel shear. Allowable strengths and loads are computed using applicable sections of ASME Section III, Subsection NF.

Unlike the HI-TRAC 125 and the HI-TRAC 100, the HI-TRAC 125D is designed and fabricated without pocket trunnions. An L-shaped rotation frame is used to upend and downend the HI-TRAC 125D, instead of pocket trunnions. Thus, a pocket trunnion analysis is not applicable to the HI-TRAC 125D.

The table below summarizes the results for the HI-TRAC 125 and the HI-TRAC 100 ~~from the two appendices~~:

Pocket Trunnion Weld Evaluation Summary			
Item	**Value (ksi)**	**Allowable (ksi)†**	**Safety Factor**
HI-TRAC 125 Pocket Trunnion-Outer Shell Weld Group Stress	7.979	23.275	2.917
HI-TRAC 125 Pocket Trunnion–Water Jacket Weld Group Stress	5.927	23.275	3.9
HI-TRAC 100 Pocket Trunnion-Outer Shell Weld Group Stress	6.603	23.275	3.525
HI-TRAC 100 Pocket Trunnion–Water Jacket Weld Group Stress	5.244	23.275	4.438
HI-TRAC 100 Pocket Trunnion–Bolt Tension at Optional Split	45.23	50.07	1.107
HI-TRAC 100 Pocket Trunnion–Bearing Stress on Base Surfaces at Dowel	6.497	32.7	5.033
HI-TRAC 100 Pocket Trunnion–Tear-out Stress on Base Surfaces at Dowel	2.978	26.09	8.763
HI-TRAC 100 Pocket Trunnion–Shear Stress on Dowel Cross Section at Optional Split	29.04	37.93	1.306

† Allowable stress is reported for the Level B loading, which results in the minimum safety factor.

To provide additional information on the local stress state adjacent to the rotation trunnion, ~~Appendix 3.AA also includes~~ a new finite element analysis *is undertaken to provide* ~~providing~~ details on the state of stress in the metal structure surrounding the rotation trunnions for the HI-TRAC 125. The finite element analysis has been based on a model that includes major structural contributors from the water jacket enclosure shell panels, radial channels, end plates, outer and inner shell, and bottom flange. In the finite element analysis, the vertical trunnion load has been oriented in the direction of the HI-TRAC 125 longitudinal axis. The structural model has been confined to the region of the HI-TRAC adjacent to the rotation trunnion block; the extent of the model in the longitudinal direction has been determined by calculating the length of the "bending boundary layer" associated with a classical shell analysis. This was considered to be a sufficient length to capture

maximum shell stresses arising from the Level B (off-normal) rotation trunnion loading. ~~Appendix 3.AA contains the results of the finite element simulations with complete graphical output showing the longitudinal and circumferential stress distribution in the inner and outer shells and in the radial channels.~~ The local nature of the stress around the trunnion block is clearly demonstrated by the *finite element* ~~graphical~~ results.

Consistent with the requirements of ASME Section III, Subsection NF, for Class 3 components, safety factors for primary membrane stress have been computed. Primary stresses are located away from the immediate vicinity of the trunnion; although the NF Code sets no limits on primary plus secondary stresses that arise from the gross structural discontinuity immediately adjacent to the trunnion, these stresses are listed for information. The results~~, assembled from the results in Appendix 3.AA,~~ are summarized in the table below for the Level B load distribution for the HI-TRAC 125.

ITEM –HI-TRAC 125	CALCULATED VALUE	ALLOWABLE VALUE
Longitudinal Stress - (ksi) (Primary Stress –Inner Shell)	-0.956	23.275
Tangential Stress (ksi) (Primary Stress - Inner Shell)	-1.501	23.275
Longitudinal Stress (ksi) (Primary Stress – Outer Shell)	-0.830	23.275
Tangential Stress (ksi) (Primary Stress - Outer Shell)	-0.436	23.275
Longitudinal Stress - (ksi) (Primary Stress – Radial Channels)	2.305	23.275
Tangential Stress (ksi) (Primary Stress - Radial Channels)	-0.631	23.275
Longitudinal Stress - (ksi) (Primary plus Secondary Stress -Inner Shell)	1.734	No Limit (34.9)*
Tangential Stress (ksi) (Primary plus Secondary Stress - Inner Shell)	-1.501	NL
Longitudinal Stress (ksi) (Primary plus Secondary Stress - Outer Shell)	2.484	NL
Tangential Stress (ksi) (Primary plus Secondary Stress - Outer Shell)	-2.973	NL
Longitudinal Stress - (ksi) (Primary plus Secondary Stress - Radial Channels)	-13.87	NL
Tangential Stress (ksi) (Primary plus Secondary Stress - Radial Channels)	-2.303	NL

* The NF Code sets no limits (NL) for primary plus secondary stress (see Table 3.1.17). Nevertheless, to demonstrate the robust design with its large margins of safety, we list here, for information only, the allowable value for Primary Membrane plus Primary Bending Stress appropriate to temperatures up to 650 degrees F.

The only stress of any significance is the longitudinal stress in the radial channels. This stress occurs immediately adjacent to the trunnion block/radial channel interface and by its localized nature is identifiable as a stress arising at the gross structural discontinuity (secondary stress).

The finite element analysis has also been performed for the HI-TRAC 100 transfer cask~~; results are reported in Appendix 3.AI~~. The following table summarizes the results:

ITEM –HI-TRAC 100	CALCULATED VALUE	ALLOWABLE VALUE
Longitudinal Stress - (ksi) (Primary Stress –Inner Shell)	-0.756	23.275
Tangential Stress (ksi) (Primary Stress - Inner Shell)	-2.157	23.275
Longitudinal Stress (ksi) (Primary Stress – Outer Shell)	-0.726	23.275
Tangential Stress (ksi) (Primary Stress - Outer Shell)	-0.428	23.275
Longitudinal Stress - (ksi) (Primary Stress – Radial Channels)	2.411	23.275
Tangential Stress (ksi) (Primary Stress - Radial Channels)	-0.5305	23.275
Longitudinal Stress - (ksi) (Primary plus Secondary Stress - Inner Shell)	2.379	NL
Tangential Stress (ksi) (Primary plus Secondary Stress - Inner Shell)	-2.157	NL
Longitudinal Stress (ksi) (Primary plus Secondary Stress - Outer Shell)	3.150	NL
Tangential Stress (ksi) (Primary plus Secondary Stress - Outer Shell)	-3.641	NL
Longitudinal Stress - (ksi) (Primary plus Secondary Stress - Radial Channels)	-15.51	NL
Tangential Stress (ksi) (Primary plus Secondary Stress - Radial Channels)	-2.294	NL

The finite element analyses of the metal structure adjacent to the trunnion block did not include the state of stress arising from the water jacket internal pressure. These stresses ~~are computed in Appendix 3.AG and~~ are conservatively computed based on a two-dimensional strip model that neglects the lower annular plate. The water jacket bending stresses ~~calculated in Appendix 3.AG~~ are summarized below:

~~Appendix 3.AG Result for~~ Tangential Bending Stress in Water Jacket Outer Panel from Water Pressure (including hydrostatic and inertia effects)	Calculated Value (ksi)
HI-TRAC 125	18.41
HI-TRAC 100	22.47

To establish a minimum safety factor for the outer panels of the water jacket for the Level A condition, we must add primary membrane circumferential stress from the trunnion load analysis ~~(Appendices 3.AA and 3.AI with reduction factor from Level B to Level A load)~~ to primary circumferential bending stress from the water jacket bending stress ~~(Appendix 3.AG)~~. Then, the safety factors may be computed by comparison to the allowable limit for primary membrane plus primary bending stress. The following results are obtained:

Results for Load Case 01 in Water Jacket (Load Case 01) – Level A Load			
Circumferential Stress in Water Jacket Outer Enclosure	CALCULATED VALUE (ksi)	ALLOWABLE VALUE (ksi)	SAFETY FACTOR (allowable value/calculated value)
HI-TRAC 125	18.797	26.25	1.397
HI-TRAC 100	22.781	26.25	1.152

To arrive at minimum safety factors for primary membrane plus bending stress in the outer panel of the water jacket for the Level B condition, we amplify the finite element results *from the trunnion load analysis*~~in accordance with Appendices 3.AA and 3.AI~~, add the appropriate stress from *the two-dimensional water jacket calculation*~~Appendix 3.AG~~, and compare the results to the increased Level B allowable. The following results are obtained:

Results for Load Case 01 in Water Jacket (Load Case 01) – Level B Load			
Circumferential Stress in Water Jacket Outer Enclosure	CALCULATED VALUE (ksi)	ALLOWABLE VALUE (ksi)	SAFETY FACTOR (allowable value/calculated value)
HI-TRAC 125	19.041	35.0	1.84
HI-TRAC 100	23.00	35.0	1.52

All safety factors are greater than 1.0; the Level A load condition governs.

3.4.4.3.3.2 Lead Slump in HI-TRAC 125 - Horizontal Drop Event (Case 02.b in Table 3.1.5)

During a side drop of the HI-TRAC 125 transfer cask, the lead shielding must be shown not to slump and cause significant amounts of shielding to be lost in the top area of the lead annulus. Slumping of the lead is not considered credible in the HI-TRAC transfer cask because of:

a. the shape of the interacting surfaces
b. the ovalization of the shell walls under impact
c. the high coefficient of friction between lead and steel
d. The inertia force from the MPC inside the HI-TRAC will compress the inner shell at the impact location and locally "pinch" the annulus that contains the lead; this opposes the tendency for the lead to slump and open up the annulus at the impact location.

Direct contact of the outer shell of the HI-TRAC with the ISFSI pad is not credible since there is a water jacket that surrounds the outer shell. The water jacket metal shell will experience most of the direct impact. Nevertheless, to conservatively analyze the lead slump scenario, it is assumed that there is no water jacket, the impact occurs far from either end of the HI-TRAC so as to ignore any strengthening of the structure due to end effects, the impact occurs directly on the outer shell of the HI-TRAC, and the contact force between HI-TRAC and the MPC is ignored. All of these assumptions are conservative in that their imposition magnifies any tendency for the lead to slump.

To confirm that lead slump is not credible, a finite element analysis of the lead slump problem, incorporating the conservatisms listed above, during a postulated HI-TRAC 125 horizontal drop (see Figure 3.4.22) is carried out. ~~Details of the analysis (finite element model and plotted results) are presented in Appendix 3.F.~~ The HI-TRAC 125 cask body modeled consists only of an inner steel shell, an outer steel shell, and a thick lead annulus shield contained between the inner and outer shell. A unit length of HI-TRAC is modeled and the contact at the lead/steel interface is modeled as a compression-only interface. Interface frictional forces are conservatively neglected. As the HI-TRAC 125 has a greater lead thickness, analysis of the HI-TRAC 125 is considered to bound the HI-TRAC *100*~~125~~. Furthermore, since there are no differences between the HI-TRAC 125 and the HI-TRAC 125D with respect to the finite element model, the results are valid for both 125-Ton transfer casks.

The analysis is performed in two parts:

First, to maximize the potential for lead/steel separation, the shells are ignored and the gap elements grounded. This has the same effect as assuming the shells to be rigid and maximizes the potential and magnitude of any separation at the lead/steel interface (and subsequent slump). This also maximizes the contact forces at the portion of the interface that continues to have compression forces developed. The lead annulus is subjected to a 45g deceleration and the deformation, stress field, and interface force solution developed. This solution establishes a conservative result for the movement of the lead relative to the metal shells.

In the second part of the analysis, the lead is removed and replaced by the conservative (high) interface forces from the first part of the analysis. These interface forces, together with the 45g deceleration-induced inertia forces from the shell self weight are used to obtain a solution for the stress and deformation field in the inner and outer metal shells.

The results of the analysis ~~described in Appendix 3.F,~~ are as follows:

a. The maximum predicted lead slump at a location 180 degrees from the impact point is 0.1". This gap decreases gradually to 0.0" after approximately 25 degrees from the vertical axis. ~~It is shown in Appendix 3.F that t~~The decrease in the diameter of the inner shell of the transfer cask (in the direction of the deceleration) is approximately 0.00054". This demonstrates that ovalization of the HI-TRAC shells does not occur. Therefore, the lead shielding deformation is confined to a local region with negligible deformation of the confining shells.

b. The stress intensity distribution in the shells demonstrates that high stresses are concentrated, as anticipated, only near the assumed point of impact with the ISFSI pad. The value of the maximum stress intensity (51,000 psi) remains below the allowable stress intensity for primary membrane plus primary bending for a Level D event (58,700 psi). Thus, the steel shells continue to perform their function and contain the lead. The stress distribution, obtained using the conservatively large interface forces, demonstrates that permanent deformation could occur only in a localized region near the impact point. Since the "real" problem precludes direct impact with the outer shell, the predicted local yielding is simply a result of the conservatisms imposed in the model.

It is concluded that a finite element analysis of the lead slump under a 45g deceleration in a side drop clearly indicates that there is no appreciable change in configuration of the lead shielding and no overstress of the metal shell structure. Therefore, retrievability of the MPC is not compromised and the HI-TRAC transfer cask continues to provide shielding.

3.4.4.3.3.3 HI-TRAC Lid Stress Analysis During HI-TRAC Drop Accident (Load Case 02.b in Table 3.1.5)

~~Appendix 3.AD presents t~~The *stress in the* HI-TRAC 125 transfer lid *is analyzed* ~~stress analysis~~ when the lid is subject to the deceleration loads of a side drop. Figure 3.4.22 is a sketch of the scenario. *The analysis shows* ~~It is shown in Appendix 3.AD~~ that the cask body, under a deceleration of 45g's, will not separate from the transfer lid during the postulated side drop. This event is considered a Level D event in the ASME parlance.

The bolts that act as doorstops to prevent opening of the doors are also checked ~~in this appendix~~ for their load capacity. It is required that sufficient shear capacity exists to prevent both doors from opening and exposing the MPC.

The only difference between the HI-TRAC 100 and the HI-TRAC 125 transfer lid doors is that the HI-TRAC 100 has less lead and has no middle steel plate. ~~Appendix 3.AJ presents analyses~~ *A* similar *analysis of* ~~to Appendix 3.AD for~~ the HI-TRAC 100 ~~and~~ shows that all safety factors are greater than 1.0. The table given below summarizes the *results for both units*~~work in Appendices 3.AD and 3.AJ~~:

Transfer Lid Attachment Integrity Under Side Drop			
Item – Shear Capacity	**Value (kip) or (ksi)**	**Capacity (kip) or (ksi)**	**Safety Factor= Capacity/Value**
HI-TRAC 125 Attachment (kip)	1,272.0	1,770.0	1.392
HI-TRAC 125 Door Lock Bolts (ksi)	20.24	48.3	2.387
HI-TRAC 100 Attachment (kip)	1,129.0	1,729.0	1.532
HI-TRAC 100 Door Lock Bolts (ksi)	13.81	48.3	3.497

All safety factors are greater than 1.0 and are based on actual interface loads. ~~The actual interface load for both transfer casks is computed in Appendix 3.AN.~~ For the HI-TRAC 125 and the HI-TRAC 100, the interface load (primary impact at transfer lid) computed from the handling accident analysis is bounded by the values given below:

BOUNDING INTERFACE LOADS COMPUTED FROM HANDLING ACCIDENT ANALYSES	
Item	**Bounding Value** ~~**from Appendix 3.AN (kip)**~~
HI-TRAC 125	1,300
HI-TRAC 100	1,150

The HI-TRAC 125D transfer cask does not utilize a transfer lid. Instead, the MPC is transferred to or from a storage overpack using the HI-TRAC pool lid and a special mating device. Therefore, an analysis is performed to demonstrate that the pool lid will not separate from the cask body during the postulated side drop. The results of this analysis are summarized in the following table.

HI-TRAC 125D Pool Lid Attachment Integrity Under Side Drop			
Item	Calculated Value	Allowable Limit	Safety Factor
Lateral Shear Force (kips)	562.5	1083	1.925
Maximum Bolt Tensile Stress (ksi)	11.41	116.4	10.20
Combined Tension and Shear Interaction	0.279	1.00	3.58

3.4.4.3.3.4 Stress Analysis of the HI-TRAC Water Jacket (Load Case 03 in Table 3.1.5)

The water jacket is assumed subject to internal pressure from pressurized water and gravity water head. Calculations *are performed for the HI-TRAC 125, the HI-TRAC 125D, and the HI-TRAC 100* to determine the water jacket stress under internal pressure plus hydrostatic load~~are performed in Appendix 3.AG for the HI-TRAC 125 and the HI-TRAC 100~~. Results are obtained for the water jacket configuration and the connecting welds for *all* ~~both~~ HI-TRAC transfer casks. The table below summarizes the results of the *analyses*~~analysis performed in Appendix 3.AG, as well as the results of similar calculations for the HI-TRAC 125D~~.

Water Jacket Stress Evaluation			
Item	Value (ksi)	Allowable (ksi)	Safety Factor
HI-TRAC 125 Water Jacket Enclosure Shell Panel Bending Stress	18.41	26.25	1.426
HI-TRAC 100 Water Jacket Enclosure Shell Panel Bending Stress	22.47	26.25	1.168
HI-TRAC 125 Water Jacket Bottom Flange Bending Stress	18.3	26.25	1.434
HI-TRAC 100 Water Jacket Bottom Flange Bending Stress	16.92	26.25	1.551
HI-TRAC 125 Weld Stress - Enclosure Panel Single Fillet Weld	2.22	21.0	9.454
HI-TRAC 100 Weld Stress – Enclosure Panel Single Fillet Weld	1.841	21.0	11.408
HI-TRAC 125 Weld Stress – Bottom Flange to Outer Shell Double Fillet Weld	14.79	21.0	1.42
HI-TRAC 125 - Enclosure Panel Direct Stress	1.571	17.5	11.142
HI-TRAC 100 - Enclosure Panel Direct Stress	1.736	17.5	10.84
HI-TRAC 125D Water Jacket Bottom Flange Bending Stress	18.88	26.25	1.39
HI-TRAC 125D Water Jacket Enclosure Shell Panel Bending Stress	10.80	26.25	2.43
HI-TRAC 125D Weld Stress – Enclosure Panel to Radial Rib Plug Welds	1.093	17.5	16.01
HI-TRAC 125D Weld Stress – Bottom Flange to Outer Shell Single Fillet Weld	3.133	21.0	6.70

3.4.4.3.3.5 HI-TRAC Top Lid Separation (Load Case 02.b in Table 3.1.5)

~~Appendix 3.AH examines t~~The potential of top lid separation under a 45g deceleration side drop event *requires examination*. It is concluded *by analysis* that the connection provides acceptable protection against top lid separation. It is also shown that the bolts and the lid contain the MPC within the HI-TRAC cavity during and after a drop event. The results from the HI-TRAC 125 bound the corresponding results from the HI-TRAC 100 because the top lid bolts are identical in the two units and the HI-TRAC 125 top lid weighs more. The analysis also bounds the HI-TRAC 125D because the postulated side drop of the HI-TRAC 125, during which the transfer lid impacts the target surface, produces a larger interface load between the MPC and the top lid of the HI-TRAC than the nearly horizontal drop of the HI-TRAC 125D. The table below provides the results of the bounding analysis.

HI-TRAC Top Lid Separation Analysis			
Item	**Value**	**Capacity**	**Safety Factor= Capacity/Value**
Attachment Shear Force (lb.)	123,750	957,619	7.738
Tensile Force in Stud (lb.)	132,000	1,117,222	8.464
Bending Stress in Lid (ksi)	35.56	58.7	1.65
Shear Load per unit Circumferential Length in Lid (lb./in)	533.5	29,400	55.10

3.4.4.4 Comparison with Allowable Stresses

Consistent with the formatting guidelines of Reg. Guide 3.61, calculated stresses and stress intensities from the finite element and other analyses are compared with the allowable stresses and stress intensities defined in Subsection 3.1.2.2 per the applicable sections of [3.4.2] and [3.4.4] for defined normal and off-normal events and [3.4.3] for accident events (Appendix F).

3.4.4.4.1 MPC

Table 3.4.6 provides summary data extracted from the numerical analysis results for the fuel basket, enclosure vessel, and fuel basket supports based on the design basis deceleration. The results presented in Table 3.4.6 do not include any dynamic amplification due to internal elasticity of the structure (i.e., local inertia effects). ~~Appendix 3.X~~ *Calculations* suggests that a uniform conservative dynamic amplifier would be 1.08 independent of the duration of impact. If we recognize that the tip-over event for HI-STORM 100 is a long duration event, then a dynamic amplifier of 1.04 is appropriate. The summary data provided in Table 3.4.3 and 3.4.4 gives the lowest safety factor computed for the fuel basket and for the MPC, respectively. *Safety factors reported for the MPC shell in Table 3.4.4 are based on allowable strengths at 500 deg. F.* Modification of the fuel basket safety factor for dynamic amplification leaves considerable margin.

Factors of safety greater than 1 indicate that calculated results are less than the allowable strengths.

A perusal of the results in Tables 3.4.3 and 3.4.4 under different load combinations for the fuel basket and the enclosure vessel reveals that all factors of safety are above 1.0 even if we use the most conservative value for dynamic amplification factor. The relatively modest factor of safety in the fuel basket under side drop events (Load Case F3.b and F3.c) in Table 3.4.3 warrants further explanation since a very conservative finite element model of the structure has been utilized in the analysis.

The wall thickness of the storage cells, which is by far the most significant variable in a fuel basket's structural strength, is significantly greater in the MPCs than in comparable fuel baskets licensed in the past. For example, the cell wall thickness in the TN-32 basket (Docket No. 72-1021, M-56), is 0.1 inch and that in the NAC-STC basket (Docket No. 71-7235) is 0.048 inch. In contrast, the cell wall thickness in the MPC-68 is 0.25 inch. In spite of their relatively high flexural rigidities, computed margins in the fuel baskets are rather modest. This is because of some assumptions in the analysis that lead to an overstatement of the state of stress in the fuel basket. For example:

i. The section properties of longitudinal fillet welds that attach contiguous cell walls to each other are completely neglected in the finite element model (Figure 3.4.7). The fillet welds strengthen the cell wall section modulus at the very locations where maximum stresses develop.

ii. The radial gaps at the fuel basket-MPC shell and at the MPC shell-storage overpack interface are explicitly modeled. As the applied loading is incrementally increased, the MPC shell and fuel basket deform until a "rigid" backing surface of the storage overpack is contacted, making further unlimited deformation under lateral loading impossible. Therefore, some portion of the fuel basket and enclosure vessel (EV) stress has the characteristics of secondary stresses (which by definition, are self-limited by deformation in the structure to achieve compatibility). For conservativeness in the incremental analysis, we make no distinction between deformation controlled (secondary) stress and load controlled (primary) stress in the stress categorization of the MPC-24, 32, and 68 fuel baskets. We treat all stresses, regardless of their origin, as primary stresses. Such a conservative interpretation of the Code has a direct (adverse) effect on the computed safety factors. As noted earlier, the results for the MPC-24E are properly based only on primary stresses to illustrate the conservatism in the reporting of results for the MPC-24, 32, and 68 baskets.

iii. A uniform pressure simulates the SNF inertia loading on the cell panels, which is a most conservative approach for incorporating the SNF/cell wall structure interaction.

The above assumptions act to depress the computed values of factors of safety in the fuel basket finite element analysis and render conservative results.

The reported factors of safety do not include the effect of dynamic load amplifiers. ~~As noted in Appendices 3.A and 3.X, t~~The duration of impact and the predominant natural frequency of the basket panels under drop events result in the dynamic load factors that do not exceed 1.08. Therefore, since all reported factors of safety are greater than the DLF, the MPC is structurally adequate for its intended functions.

Tables 3.4.7 and 3.4.8 report stress intensities and safety factors for the confinement boundary subject to internal pressure alone and internal pressure plus the normal operating condition temperature with the most severe thermal gradient. The final values for safety factors in the various locations of the confinement boundary provide assurance that the MPC enclosure vessel is a robust pressure vessel.

3.4.4.4.2 Storage Overpack and HI-TRAC

The result from analyses of the storage overpack and the HI-TRAC transfer cask is shown in Table 3.4.5. The location of each result is indicated in the table. Safety factors for lifting operations where three times the lifted load is applied are reported in Section 3.4.3.

The table shows that all allowable stresses are much greater than their associated calculated stresses and that safety factors are above the limit of 1.0.

3.4.4.5 Elastic Stability Considerations

3.4.4.5.1 MPC Elastic Stability

Stability calculations for the MPC have been carried out in the HI-STAR 100 FSAR, Docket Number 72-1008.~~, Appendix 3.H. The calculations in that submittal bound calculations for the MPC in HI-STORM 100 since all loadings are identical except for the peak deceleration under accident events, which has been reduced from 60g's to 45g's.~~ *Using the identical methodology with input loads and decelerations appropriate to the HI-STORM, safety factors > 1.0 are obtained for all relevant load cases. Note that for HI-STORM, the design external pressure differential is reduced to 0.0 psi, and the peak deceleration under accident events is reduced from 60g's(HI-STAR) to 45g's.*

3.4.4.5.2 HI-STORM 100 Storage Overpack Elastic Stability

HI-STORM 100 (and 100S) storage overpack shell buckling is not a credible scenario since the two steel shells plus the entire radial shielding act to resist vertical compressive loading. Subsection 3.4.4.3.2.3 develops values for compressive stress in the steel shells of the storage overpack. Because of the low value for compressive stress coupled with the fact that the concrete shielding backs the steel shells, we can conclude that instability is unlikely. Note that the entire weight of the storage overpack can also be supported by the concrete shielding acting in compression. Therefore, in the unlikely event that a stability limit in the steel was approached, the load would simply shift to the massive concrete shielding. Notwithstanding the above comments, stability analyses of the storage overpack have been performed for bounding cases of longitudinal compressive stress with nominal circumferential compressive stress and for bounding circumferential compressive stress with

nominal axial compressive stress. This latter case is for a bounding all-around external pressure on the HI-STORM 100 outer shell. The latter case is listed as Load Case 05 in Table 3.1.5 and is performed to demonstrate that explosions or other environmental events that could lead to an all-around external pressure on the outer shell do not cause a buckling instability. ASME Code Case N-284, a methodology accepted by the NRC, has been used for this analysis. ~~Appendix 3.AK reports results of all stability analyses performed in support of this FSAR. In that appendix, t~~The storage overpack shells are examined individually assuming that the four radial plates provide circumferential support against a buckling deformation mode. The analysis of the storage overpack outer shell for a bounding external pressure of

$$p_{ext} = 30 \text{ psi}$$

that, together with a nominal compressive axial load that bounds the dead weight load at the base of the outer shell, gives a safety factor against an instability of ~~(see Load Case 3 in Appendix 3.AK)~~:

$$\text{Safety Factor} = (1/0.466) \times 1.34 = 2.88$$

The factor 1.34 is included in the above result since the analysis methodology of Code Case N-284 builds in this factor for a stability analysis for an accident condition.

The external pressure for the overpack stability considered here significantly bounds the short-time 10 psi differential pressure (between outer shell and internal annulus) specified in Table 2.2.1.

The same postulated external pressure condition can also act on the HI-TRAC during movement from the plant to the ISFSI pad. In this case, the lead shielding acts as a backing for the outer shell of the HI-TRAC transfer cask just as the concrete does for the storage overpack. The water jacket metal structure provides considerable additional structural support to the extent that it is reasonable to state that instability under external pressure is not credible. If it is assumed that the all-around water jacket support is equivalent to the four locations of radial support provided in the storage overpack, then it is clear that the instability result for the storage overpack bounds the results for the HI-TRAC transfer cask. This occurs because the R/t ratio (mean radius-to-wall thickness) of the HI-TRAC outer shell is less than the corresponding ratio for the HI-STORM storage overpack. Therefore, no HI-TRAC analysis is performed ~~in Appendix 3.AK~~.

3.4.5 Cold

A discussion of the resistance to failure due to brittle fracture is provided in Subsection 3.1.2.3.

The value of the ambient temperature has two principal effects on the HI-STORM 100 System, namely:

i. The steady-state temperature of all material points in the cask system will go up or down by the amount of change in the ambient temperature.

ii. As the ambient temperature drops, the absolute temperature of the contained helium will drop accordingly, producing a proportional reduction in the internal pressure in accordance with the Ideal Gas Law.

In other words, the temperature gradients in the system under steady-state conditions will remain the same regardless of the value of the ambient temperature. The internal pressure, on the other hand, will decline with the lowering of the ambient temperature. Since the stresses under normal storage condition arise principally from pressure and thermal gradients, it follows that the stress field in the MPC under –40 degree F ambient would be smaller than the "heat" condition of storage, treated in the preceding subsection. Additionally, the allowable stress limits tend to increase as the component temperatures decrease.

Therefore, the stress margins computed in Section 3.4.4 can be conservatively assumed to apply to the "cold" condition as well.

Finally, it can be readily shown that the HI-STORM 100 System is engineered to withstand "cold" temperatures (-40 degrees F), as set forth in the Technical Specification, without impairment of its storage function.

Unlike the MPC, the HI-STORM 100 storage overpack is an open structure; it contains no pressure. Its stress field is unaffected by the ambient temperature, unless low temperatures produce brittle fracture due to the small stresses which develop from self-weight of the structure and from the minute difference in the thermal expansion coefficients in the constituent parts of the equipment (steel and concrete). To prevent brittle fracture, all steel material in HI-STORM 100 is qualified by impact testing as set forth in the ASME Code (Table 3.1.18).

The structural material used in the MPC (Alloy X) is recognized to be completely immune from brittle fracture in the ASME Codes.

As no liquids are included in the HI-STORM 100 storage overpack design, loads due to expansion of freezing liquids are not considered. The HI-TRAC transfer cask utilizes demineralized water in the water jacket. However, the specified lowest service temperature for the HI-TRAC is 0 degrees F and a 25% ethylene glycol solution is required for the temperatures from 0 degrees F to 32 degrees F. Therefore, loads due to expansion of freezing liquids are not considered.

There is one condition, however, that does require examination to insure ready retrievability of the fuel. Under a postulated loading of an MPC from a HI-TRAC transfer cask into a cold HI-STORM 100 storage overpack, it must be demonstrated that sufficient clearances are available to preclude interference when the "hot" MPC is inserted into a "cold" storage overpack. To this end, ~~an~~ *bounding* analysis for free thermal expansions ~~under cold conditions of storage~~ has been performed in *Subsection 4.4.5*~~Appendix 3.AF~~*, wherein the MPC shell is postulated at its maximum design basis temperature and the thermal expansion of the overpack is ignored.* ~~The storage overpack is assumed to have been uniformly cooled to 0 degrees F from its normal assembly temperature (assumed as 70 degrees F in all analyses). The MPC is assumed to have the temperature distribution associated with being contained within a HI-TRAC transfer cask. For additional conservatism in the analysis, the~~

~~MPC temperatures for the "hot condition of storage" (100 degrees F ambient) in a HI-TRAC are used to maximize the radial and axial growth of the loaded MPC. These MPC temperatures are available in Appendix 3.I.~~ The results from the evaluation of free thermal expansion ~~described above and carried out in detail in Appendix 3.AF for this "cold condition of transfer"~~ are summarized in *Subsection 4.4.5.*~~the table below:~~ *The final radial clearance (greater than 0.25" radial) is sufficient to preclude jamming of the MPC upon insertion into a cold HI-STORM 100 storage overpack.*

~~THERMOELASTIC DISPLACEMENTS IN THE HOT MPC AND COLD HI-STORM STORAGE OVERPACK UNDER COLD TEMPERATURE TRANSFER CONDITION~~				
~~HOT CANISTER – COLD HI-STORM~~				
	~~Radial Direction (in.)~~		~~Axial Direction (in.)~~	
~~Unit~~	~~Initial Clearance~~	~~Final Clearance~~	~~Initial Clearance~~	~~Final Clearance~~
~~MPC (worst case)~~	~~0.5~~	~~0.364~~	~~1.0~~	~~0.24~~

~~The final radial clearance (greater than 0.25" radial) is sufficient to preclude jamming of the MPC upon insertion into a cold HI-STORM 100 storage overpack.~~

3.4.6 HI-STORM 100 Kinematic Stability under Flood Condition (Load Case A in Table 3.1.1)

The flood condition subjects the HI-STORM 100 System to external pressure, together with a horizontal load due to water velocity. Because the HI-STORM 100 storage overpack is equipped with ventilation openings, the hydrostatic pressure from flood submergence acts only on the MPC. As stated in subsection 3.1.2.1.1.3, the design external pressure for the MPC bounds the hydrostatic pressure from flood submergence. Subsection 3.4.4.5.2 has reported a positive safety factor against instability from external pressure in excess of that expected from a complete submergence in a flood. The analysis performed below is also valid for the HI-STORM 100S.

The water velocity associated with flood produces a horizontal drag force, which may act to cause sliding or tip-over. In accordance with the provisions of ANSI/ANS 57.9, the acceptable upper bound flood velocity, V, must provide a minimum factor of safety of 1.1 against overturning and sliding. For HI-STORM 100, we set the upper bound flood velocity design basis at 15 feet/sec. Subsequent calculations conservatively assume that the flow velocity is uniform over the height of the storage overpack.

The overturning horizontal force, F, due to hydraulic drag, is given by the classical formula:

$$F = Cd\ A\ V^{2}$$

where:

V^* is the velocity head = $\frac{\rho V^2}{2g}$; (ρ is water weight density, and g is acceleration due to gravity).

A: projected area of the HI-STORM 100 cylinder perpendicular to the fluid velocity vector.

Cd: drag coefficient

The value of Cd for flow past a cylinder at Reynolds number above 5E+05 is given as 0.5 in the literature (viz. Hoerner, Fluid Dynamics, 1965).

The drag force tending to cause HI-STORM 100's sliding is opposed by the friction force, which is given by

$$F_f = \mu K W$$

where:

μ = limiting value of the friction coefficient at the HI-STORM 100/ISFSI pad interface (conservatively taken as 0.25, although literature citations give higher values).

K = buoyancy coefficient (documented in HI-981928, Structural Calculation Package for HI-STORM 100 (see citation in Subsection 3.6.4).

W: Minimum weight of HI-STORM 100 with an empty MPC.

Sliding Factor of Safety

The factor of safety against sliding, b_1, is given by

$$\beta_1 = \frac{F_f}{F} = \frac{\mu KW}{Cd\,A\,V^*}$$

It is apparent from the above equation, β, will be minimized if the empty weight of HI-STORM 100 is used in the above equation.

As stated previously, μ= 0.25, Cd = 0.5.

V^* corresponding to 15 ft./sec. water velocity is 218.01 lb per sq. ft.

A = length x diameter of HI-STORM 100 = 132.5" x 231.25"/144 sq. in./sq.ft. = 212.78 sq. ft.

K = buoyancy factor = 0.64 (per calculations in HI-981928)

W = empty weight of overpack w/ lid = 270,000 lbs. (Table 3.2.1)

Substituting in the above formula for β, we have

$\beta_1 = 1.86 > 1.1$ (required)

Since the weight of the HI-STORM 100S plus the weight of an empty MPC-32 (i.e., the lightest MPC) is greater than 270,000 lb, the above calculation is also valid for the HI-STORM 100S.

Overturning Factor of Safety

For determining the margin of safety against overturning b_2, the cask is assumed to pivot about a fixed point located at the outer edge of the contact circle at the interface between HI-STORM 100 and the ISFSI. The overturning moment due to a force F_T applied at height H^* is balanced by a restoring moment from the reaction to the cask buoyant force KW acting at radius D/2.

$$F_T H^* = KW\frac{D}{2}$$

$$F_T = \frac{KWD}{2H^*}$$

W is the empty weight of the storage overpack.

We have,

W = 270,000 lb. (Table 3.2.1)

H^* = 119.2" (maximum height of mass center per Table 3.2.3)

D = 132.5" (Holtec Drawing 1495)

K = 0.64 (calculated in HI-981928)

F_T = 96,040 lb.

F_T is the horizontal drag force at incipient tip-over.

F = Cd A V^* = 23,194 lbs. (drag force at 15 feet/sec)

The safety factor against overturning, β_2, is given as:

$$\beta_2 = \frac{F_T}{F} = 4.14 > 1.1 \text{ (required)}$$

This result bounds the result for the HI-STORM 100S since the calculation uses a conservative lower bound weight and a bounding height for the center of gravity.

In the next subsection, results are presented to show that the load F (equivalent to an inertial deceleration of F/360,000 lb = 0.0644 g's applied to the loaded storage overpack) does not lead to large global circumferential stress or ovalization of the storage overpack that could prevent ready retrievability of the MPC. It is shown in Subsection 3.4.7 that a horizontal load equivalent to 0.47g's does not lead to circumferential stress levels and ovalization of the HI-STORM storage overpack to prevent ready retrievability of the MPC. The load used for that calculation clearly bounds the side load induced by flood.

3.4.7 Seismic Event and Explosion - HI-STORM 100

3.4.7.1 Seismic Event (Load Case C in Table 3.1.1)

Overturning Analysis

The HI-STORM 100 System plus its contents may be assumed to be subject to a seismic event consisting of three orthogonal statistically independent acceleration time-histories. For the purpose of performing a conservative analysis to determine the maximum ZPA that will not cause incipient tipping, the HI-STORM 100 System is considered as a rigid body subject to a net horizontal quasi-static inertia force and a vertical quasi-static inertia force. This is consistent with the approach used in previously licensed dockets. The vertical seismic load is conservatively assumed to act in the most unfavorable direction (upwards) at the same instant. The vertical seismic load is assumed to be equal to or less than the net horizontal load with ε being the ratio of vertical component to one of the horizontal components. For use in calculations, define D_{BASE} as the contact patch diameter, and H_{CG} as the height of the centroid of an empty HI-STORM 100 System (no fuel). Conservatively, assume

D_{BASE} = 132.5" (Drawing 1495, Sheet 1 specifies 133.875" including overhang for welding)

Tables 3.2.1 and 3.2.3 give HI-STORM 100 weight data and center-of-gravity heights.

The weights and center-of-gravity heights are reproduced here for calculation of the composite center-of-gravity height of the storage overpack together with an empty MPC.

Weight (pounds)	C.G. Height (Inches); H
Overpack - W_o = 270,000	116.8
MPC-24 - W_{24} = 42,000	109.0 + 24 = 133.0†
MPC-68 - W_{68} = 39,000	111.5 + 24 = 135.5
MPC-32 – W_{32} = 36,000	113.2 + 24 = 137.2
MPC-24E – W_{24E} = 45,000	108.9 + 24 = 132.9

The height of the composite centroid, H_{CG}, is determined from the equation

$$H_{cg} = \frac{W_o \times 116.8 + W_{MPC} \times H}{W_o + W_{MPC}}$$

Performing the calculations for all of the MPCs gives the following results:

	H_{cg} (inches)
MPC-24 with storage overpack	118.98
MPC-68 with storage overpack	119.16
MPC-32 with storage overpack	119.20
MPC-24E with storage overpack	119.10

A conservative overturning stability limit is achieved by using the largest value of H_{CG} (call it H) from the above. Because the HI-STORM 100 System is a radially symmetric structure, the two horizontal seismic accelerations can be combined vectorially and applied as an overturning force at the C.G. of the cask. The net overturning static moment is

$$WG_HH$$

where W is the total system weight and G_H is the resultant zero period acceleration seismic loading (vectorial sum of two orthogonal seismic loads) so that WG_H is the inertia load due to the resultant horizontal acceleration. The overturning moment is balanced by a vertical reaction force, acting at the outermost contact patch radial location $r = D_{BASE}/2$. The resistive moment is minimized when the vertical zero period acceleration G_V tends to reduce the apparent weight of the cask. At that instant, the moment that resists "incipient tipping" is:

† From Table 3.2.3, it is noted that MPC C.G. heights are measured from the base of the MPC. Therefore, the thickness of the overpack baseplate and the concrete MPC pedestal must be added to determine the height above ground.

$$W(1-G_V)r$$

Performing a static moment balance and eliminating W results in the following inequality to ensure a "no-overturning condition:

$$G_H + \frac{r}{H}G_V \leq \frac{r}{H}$$

Using the values of r and H for the HI-STORM 100 (r = 66.25", H = 119.20"), representative combinations of G_H and G_V that satisfy the limiting equality relation are computed and tabulated below:

Acceptable Net Horizontal G-Level (HI-STORM100), G_H	Acceptable Vertical G-Level, G_V
0.467	0.16
0.445	0.20
0.417	0.25
0.357	0.357

We repeat the above computations using the weight and c.g. location of the HI-STORM 100S(232). Because of the lowered center of gravity positions, the maximum net horizontal "G" levels are slightly increased.

Performing the calculations for all of the MPCs gives the following results:

	H_{cg} (inches)
MPC-24 with storage overpack	113.89
MPC-68 with storage overpack	114.07
MPC-32 with storage overpack	114.11
MPC-24E with storage overpack	114.01

Using the values of r and H for the HI-STORM 100S(232) (r = 66.25", H = 114.11"), representative combinations of G_H and G_V that satisfy the limiting equality relation are computed and tabulated below:

Acceptable Net Horizontal G-Level (HI-STORM 100S(232)), G_H	Acceptable Vertical G-Level, G_V
0.488	0.16
0.464	0.20
0.435	0.25
0.367	0.367

The limiting values of G_H and G_V for the HI-STORM 100S(243), which is taller than the HI-STORM 100S(232), are the same as the HI-STORM 100.

Primary Stresses in the HI-STORM 100 Structure Under Net Lateral Load Over 180 degrees of the Periphery

Under a lateral loading, the storage overpack will experience axial primary membrane stress in the inner and outer shells as it resists bending as a "beam-like" structure. Under the same kind of lateral loading over one-half of the periphery of the cylinder, the shells will tend to ovalize under the loading and develop circumferential stress. Calculations for stresses in both the axial and circumferential direction are required to demonstrate satisfaction of the Level D structural integrity requirements and to provide confidence that the MPC will be readily removable after a seismic event, if necessary. An assessment of the stress state in the structure under the seismic induced load will be shown to bound the results for any other condition that induces a peripheral load around part of the HI-STORM 100 storage overpack perimeter. The specific analyses are performed using the geometry and loading for the HI-STORM 100; the results obtained for stress levels and the safety assessment are also applicable to an assessment of the HI-STORM 100S.

A simplified calculation to assess the flexural bending stress in the HI-STORM 100 structure under the limiting seismic event (at which tipping is incipient) is presented in the following:

From the acceptable acceleration table presented above, maximum horizontal acceleration is bounded by 0.47g. The corresponding lateral seismic load, F, is given by

$$F = 0.47\ W$$

This load will be maximized if the upper bound HI-STORM 100 weight (W = 360,000 lbs. (Table 3.2.1)) is used. Accordingly,

$$F = (0.47)\ (360{,}000) = 169{,}200 \text{ lbs.}$$

No dynamic amplification is assumed as the overpack, considered as a beam, has a natural frequency well into the rigid range.

The moment, M, at the base of the HI-STORM 100 due to this lateral force is given by

$$M = \frac{F\,H}{2}$$

where H = height of HI-STORM 100 (taken conservatively as 235 inches). Note that the loading has now been approximated as a uniform load acting over the full height of the cask.

The flexural stress, σ, is given by the ratio of the moment M to the section modulus of the steel shell structure, z, which is computed to be 12,640 in^3 ~~(Structural Calculation Package HI-981928)~~.

Therefore,

$$\sigma = \frac{(169{,}200)\,(235)}{(12{,}640)\,(2)} = 1{,}573\ \text{psi}$$

We note that the strength of concrete has been neglected in the above calculation.

The maximum axial stress in the storage overpack shell will occur on the "compressive" side where the flexural bending stress algebraically sums with the direct compression stress σ_d from vertical compression.

From the representative acceleration table the vertical seismic accelerations corresponding to the net 0.47g horizontal acceleration is below 0.16g.

Therefore, using the maximum storage overpack weight (bounded by 270,000 lbs. from data in Table 3.2.1)

$$\sigma_d = \frac{(270{,}000)\,(1.16)}{554.47} = 565\ \text{psi}$$

where 554.47 sq. inch is the metal area (cross section) of the steel structure in the HI-STORM 100 storage overpack as computed in Subsection 3.4.4.3.2.1. The total axial stress, therefore, is

$$\sigma_T = 1{,}573 + 565 = 2{,}138\ \text{psi}$$

Per Table 3.1.12, the allowable membrane stress intensity for a Level D event is 39,750 psi at 350 degrees F.

The Factor of Safety, β, is, therefore

$$\beta = \frac{39{,}750}{2{,}138} = 18.59$$

Examination of the *stability calculations for the overpack outer shell under a 45-g vertical end drop* ~~results for the stability load case 2 (which considers bounding loads) in Appendix 3.AK~~ demonstrates that no instability will result from this compressive load induced by a seismic or other environmental load leading to bending of the storage overpack as a beam.

The previous calculation has focussed on the axial stress in the members developed assuming that the storage overpack does not overturn but resists the lateral load by remaining in contact with the ground and bending like a beam. Since the lateral loading is only over a portion of the periphery, there is also the potential for this load to develop circumferential stress in the inner and outer shells to resist ovalization of the shells. To demonstrate continued retrievability of the MPC after a seismic event, it must be shown that either the stresses remain in the elastic range or that any permanent deformation that develops due to plasticity doe not intrude into the MPC envelope after the event is ended. In the following subsection, *classical formulas* ~~a classical result from Appendix 3.B~~ for the deformation of rings under specified surface loadings *are* ~~is~~ used to provide a conservative solution for the circumferential stresses. Specifically, *the* ~~Appendix 3.B contains a complete~~ solution for a point-supported ring subject to a gravitational induced load, *as depicted in the sketch below, is implemented* ~~around the periphery of the ring~~. This solution provides a conservative estimate of the circumferential stress and the deformation of the ring that will develop under the actual applied seismic load. ~~Specifically, the following classical ring problem, shown in the sketch below, is applied to obtain the circumferential stress and deformation field under the postulated seismic event:~~

Ring supported at base and loaded by its own weight, w, given per unit circumferential length.

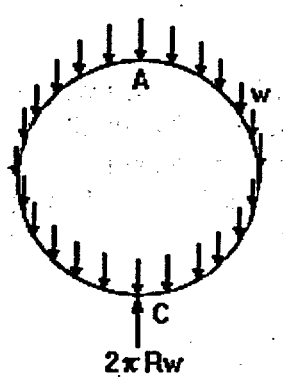

The solution ~~in Appendix 3.B~~ considers the geometry and load appropriate to a unit length of the inner and outer shells of the HI-STORM 100 storage overpack with a total weight equal to the overpack bounding weight (no MPC) subject to a 45g deceleration inertial loading. The numerical results *for the 45g tipover event* ~~in Appendix 3.B~~ can be directly applied here by multiplying by the factor "X", where "X" reflects the differences in the decelerations and the weights used for the *tipover event* ~~case considered in Appendix 3.B~~ and for the seismic load case here in this subsection.

X = (0.47g/45g) x (360,000lb./270,000lb.) = 0.0139

Using this factor on the *tipover* solution ~~in Appendix 3.B, (Attachment B-1, Case 15.16)~~ gives the following bounding results for maximum stresses (without regard for sign and location of the stress) and deformations:

Maximum circumferential stress due to bending moment = (29,310 psi x X) = 407 psi

Maximum circumferential stress due to mean tangential force = (18,900 lb./2 sq.inch) x X = 131.4 psi

Change in diameter in the direction of the load = -0.11" x X = -0.0015"

Change in diameter perpendicular to the direction of the load = +0.06" x X = 0.0008"

From the above results, it is clear that no permanent ovalization of the storage overpack occurs during the seismic event and that circumferential stresses will remain elastic and are bounded by the stresses computed based on considering the storage overpack as a simple beam. Therefore, the safety factors based on maximum values of axial stress are appropriate. The magnitudes of the diameter changes that are suggested by the ring solution clearly demonstrate that ready retrievability of the MPC is maintained after the seismic event.

Because of the low values for the calculated axial stress, the conclusions of the previous section are also valid for the HI-STORM 100S.

Potential for Concrete Cracking

It can be readily shown that the concrete shielding material contained within the HI-STORM 100 structure will not crack due to the flexuring action of HI-STORM 100 during a bounding seismic event that leads to a maximum axial stress in the storage overpack. For this purpose, the maximum axial strain in the steel shell is computed by dividing the tensile stress developed by the seismic G forces (for the HI-STORM 100, for example) by the Young's Modulus of steel.

$$\zeta = \frac{1{,}321}{28\text{E}+06} = 47.\text{E}-06$$

where the Young's Modulus of steel is taken from Table 3.3.2 at 350 degrees F.

The acceptable concrete strain in tension is estimated from information in ACI-318.1 for plain concrete. The ratio of allowable tensile stress to concrete Young' Modulus is computed as

Allowable ConcreteStrain = $(5 \times (0.75) \times (f)^{1/2})/(57{,}000(f)^{1/2}) = 65.8E\text{-}06$

In the above expression, f is the concrete compressive strength.

Therefore, we conclude that considerable margins against tensile cracking of concrete under the bounding seismic event exist.

Sliding Analysis

An assessment of sliding of the HI-STORM 100 System on the ISFSI pad during a postulated limiting seismic event is performed using a one-dimensional "slider block on friction supported surface" dynamic model. The results for the shorter HI-STORM 100S are comparable. The HI-STORM 100 is simulated as a rigid block of mass 'm' placed on a surface which is subject to a sinusoidal acceleration of amplitude 'a'. The coefficient of friction of the block is assumed to be reduced by a factor α to recognize the contribution of vertical acceleration in the most adverse manner (vertical acceleration acts to reduce the downward force on the friction interface). The equation of motion for such a "slider block" is given by:

$$m\ddot{x} = R + m\,a \sin \omega t$$

where:

- $\ddot{x}$: relative acceleration of the slider block (double dot denotes second derivative of displacement 'x' in time)
- a: amplitude of the sinusoidal acceleration input
- ω: frequency of the seismic input motion (radians/sec)
- t: time coordinate

R is the resistive Coulomb friction force that can reach a maximum value of $\mu(mg)$ (μ= coefficient of friction) and which always acts in the direction of opposite to $\dot{x}(t)$.

Solution of the above equation can be obtained by standard numerical integration for specified values of m, a, w and a. The following input values are used.

a = 0.47g

α = 0.84 = 1 - vertical acceleration (vertical acceleration is 0.16g for net horizontal acceleration equal to 0.47 from the acceleration table provided in the foregoing)

$m =$ 360,000 lbs/g

$\mu =$ 0.25

For establishing the appropriate value of ω, reference is made to the USAEC publication TID-7024, "Nuclear Reactor and Earthquakes", page 35, 1963, which states that the significant energy of all seismic events in the U.S. essentially lies in the range of 0.4 to 10 Hz. Taking the mid-point value

$$\omega = (6.28)\ (0.5)\ (0.4+10) = 32.7 \text{ rad/sec.}$$

The numerical solution of the above equation yields the maximum excursion of the slider block x_{max} as 0.12 inches, which is negligible compared to the spacing between casks.

Calculations performed at lower values of ω show an increase in x_{max} with reducing ω. At 1 Hz, for example, $x_{max} = 3.2$ inches. It is apparent from the above that there is a large margin of safety against inter-module collision within the HI-STORM 100 arrays at an ISFSI, where the minimum installed spacing is over 2 feet (Table 1.4.1).

The above dynamic analysis indicates that the HI-STORM 100 System undergoes minimal lateral vibration under a seismic input with net horizontal ZPA g-values as high as 0.47 even under a bounding (from below) low interface surface friction coefficient of 0.25. Data reported in the literature (ACI-349R (97), Commentary on Appendix B) indicates that values of the coefficient of friction, μ, as high as 0.7 are obtained at steel/concrete interfaces.

To ensure against unreasonably low coefficients of friction, the ISFSI pad design may require a "broom finish" at the user's discretion. The bottom surface of the HI-STORM 100 is manufactured from plate stock (i.e. non-machine finish). A coefficient of friction value of 0.53 is considered to be a conservative numerical value for the purpose of ascertaining the potential for incipient sliding of the HI-STORM 100 System. The coefficient of friction is required to be verified by test (see Table 2.2.9).

The relationship between the vertical ZPA, G_V, (conservatively assumed to act opposite to the normal gravitational acceleration), and the resultant horizontal ZPA G_H to insure against incipient sliding is given from static equilibrium considerations as:

$$G_H + \mu G_V \leq \mu$$

Using a conservative value of μ equal to 0.53, the above relationship provides governing ZPA limits for a HI-STORM 100 (or 100S) System arrayed in a freestanding configuration. The table below gives representative combinations that meet the above limit.

G_H (in g's)	G_V (in g's)
0.445	0.16
0.424	0.20
0.397	0.25
0.350	0.34

If the values for the DBE event at an ISFSI site satisfy the above inequality relationship for incipient sliding with coefficient of friction equal to 0.53, then the non-sliding criterion set forth in NUREG-1536 is assumed to be satisfied a'priori. However, if the ZPA values violate the inequality by a small amount, then it is permissible to satisfy the non-sliding criterion by implementing measures to roughen the HI-STORM 100/ISFSI pad interface to elevate the value of μ to be used in the inequality relation. To demonstrate that the value of μ for the ISFSI pad meets the required value implied by the above inequality, a series of Coulomb friction (under the QA program described in Chapter 13) shall be performed as follows:

Pour a concrete block with horizontal dimensions no less than 2' x 2' and a block thickness no less than 0.5'. Finish the top surface of the block in the same manner as the ISFSI pad surface will be prepared.

Prepare a 6" x 6" x 2" SA516 Grade 70 plate specimen (approximate weight = 20.25 lb.) to simulate the bottom plate of the HI-STORM 100 overpack. Using a calibrated friction gage attached to the steel plate, perform a minimum of twenty (20) pull tests to measure the static coefficient of friction at the interface between the concrete block and the steel plate. The pull tests shall be performed on at least ten (10) different locations on the block using varying orientations for the pull direction.

The coefficient of friction to be used in the above sliding inequality relationship will be set as the average of the results from the twenty tests.

The satisfaction of the "no-sliding" criterion set down in the foregoing shall be carried out along with the "no-overturning" qualification (using the static moment balance method in the manner described at the beginning of this subsection) and documented as part of the ISFSI facility's CFR72.212 evaluation.

Alternative Evaluation of Overturning and Sliding

In this subsection, an evaluation of the propensity for the free standing cask to be in a state of either incipient overturning or incipient sliding has been performed using a simple static analysis that is independent of time phasing of the input acceleration time histories and considers only the Zero Period Acceleration (ZPA) obtained from the response spectra. For both incipient overturning and incipient sliding, the following inequality must be satisfied to ensure satisfaction of the static criteria.

$$G_H + \mu G_V \leq \mu$$

For the incipient overturning evaluation, μ=(radius of cask base/height to loaded cask center-of-gravity). For the incipient sliding evaluation, μ= Coulomb coefficient of friction =0.53 at the cask/ISFSI pad interface (unless testing justifies use of a higher value). The inequality has been derived assuming that the cask is resting on a flat and level surface that is subject to a seismic event characterized by a response spectra set with the net horizontal and vertical Zero Period Acceleration (ZPA) denoted by G_H and G_V, respectively.

This "screening" evaluation provides a conservative criterion to insure that top-of-pad acceleration time histories from the aggregate effect of soil structure interaction and free field acceleration would not predict initiation of overturning or sliding. If on-the-pad acceleration time histories are available, the applicable inequality (for overturning and sliding) may be satisfied at <u>each time instant</u> during the Design Basis Earthquake with G_H and G_V representing coincident values of the magnitude of the net horizontal and vertical acceleration vectors.

3.4.7.2 Explosion (Load Case 05 in Table 3.1.5)

In the preceding subsection, it has been demonstrated that incipient tipping of the storage overpack will not occur under a side load equal to 0.47 times the weight of the cask. For a fully loaded cask, this side load is equal to
F = 169,200 lb.

If it is assumed that this side load is uniformly distributed over the height of the cask and that the cask centroid is approximately at the half-height of the overpack, then an equivalent pressure, P, acting over 180 degrees of storage overpack periphery, can be defined as follows:

P x (DH) = F

Where D = overpack outside diameter, and H = height of storage overpack

For D = 132.5" and H = 235", the equivalent pressure is

P = 169,200 lb/(132.5" x 235") = 5.43 psi

Therefore, establishing 5 psi as the design basis steady state pressure differential (Table 2.2.1) across the overpack diameter ensures that incipient tipping will not occur.

Since the actual explosion produces a transient wave, the use of a static incipient tip calculation is very conservative. To evaluate the margin against tip-over from a short-time pressure pulse, a Working Model analysis of the two-dimensional dynamic motion of the HI-STORM subject to a given initial angular velocity is carried out. Figures 3.4.25 and 3.4.26 provide details of the model and the solution for a HI-STORM 100 System (simulated as a rigid body) having a weight and inertia property appropriate to a minimum weight cask. The results show that an initial angular velocity of 0.626 radians/second does not lead to a tipover of the storage overpack. The results bound those obtained for the HI-STORM 100S(232) since the overall cask height is reduced. The results for the HI-STORM 100S(243) are roughly equal to the results for the HI-STORM 100 since the differences

in height and weight are negligible.

The initial angular velocity can be related to a square wave pressure pulse of magnitude P and time duration T by the following formula:

$I\omega = (P \times D \times H) \times (0.5 \times H) \times T$

The above formula relates the change in angular motion resulting from an impulsive moment about the base of the overpack. D is the diameter of the outer shell, H is the height of the storage overpack, and I is the mass moment of inertia of the storage overpack about the mass center (assumed to be at half-height). For D=132.5", H=235", P=10 psi, T=1 second, and I=64,277,000 lb.inch sec^2 ~~(calculated in Appendix 3.C)~~, the resulting initial angular velocity is:

$\omega = 0.569$ radians/second

Therefore, an appropriate short time pressure limit is 10 psi with pulse duration less than or equal to 1 second. Table 2.2.1 sets this as the short-time external pressure differential.

The analysis in Subsection 3.4.7.1 evaluates ovalization of the shell by considering the seismically applied load as a line loading along the height of the overpack that is balanced by inertial body forces in the metal ring. The same solutions ~~in Appendix 3.B~~ can be used to examine the circumferential stress state that would be induced to resist an external pressure that developed around one-half of the periphery. Such a pressure distribution may be induced by a pressure wave crossing the cask from a nearby explosion. It is shown here~~, by reference to solutions in Appendix 3.B,~~ that a uniform pressure load over one-half of the overpack outer shell gives rise to an elastic stress state and deformation state that is bounded by a large margin by the results just presented for the seismic event in Subsection 3.4.7.1.

The case of an external pressure load from an explosion pressure wave (Load Case 05 in Table 3.1.5) is examined by combining the solutions *for two different load cases* ~~of Case1 and Case 3 in Appendix 3.B~~. The combined case that results is a balance of pressure load over one-half the perimeter and inertial body forces. The sketch below describes this:

Case 1 + Case 3

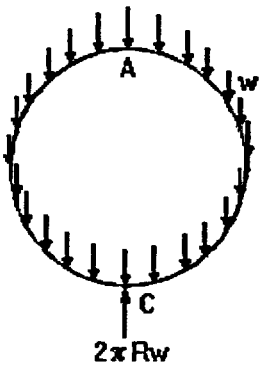

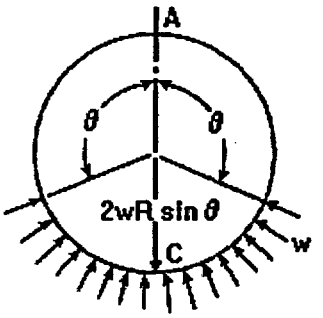

~~In Appendix 3.B, b~~*B*oth cases are considered under identical total loads (with the angle in case 3 set to 90 degrees). Therefore, adding the results from the two cases results in the desired combined case; namely, the balance of a peripheral external pressure with internal all around loading simulating an inertia load (since the reactions are identical in magnitude and opposite in direction, there is a complete cancellation of the concentrated loads).

Examination of the results ~~in Appendix 3.B~~ shows that the algebraic sum of the two ~~sets of~~ solutions give*s* results that are smaller in magnitude than the case 1 solution for a line loading balanced by inertially induced body forces. The applied loading used to develop the solution *for* ~~in Appendix 3.B,~~ case 1~~,~~ is 56,180 lb. per inch of storage overpack axial length. This load is equivalent to an external pressure P = 424 psi applied over one-half of the outer perimeter of the shell as is shown below:

P x D = 56,180 lb./inch D = 132.5"

P = 424 psi

Since this is higher by a large margin than any postulated external pressure load, circumferential stresses induced by the differential pressure specified in Table 2.2.1 are insignificant. Specifically, by adding the results from the two solutions (ring load case 1 for a point support reaction to a body force + ring load case 3 for a point support reaction to a lateral pressure over one-half of the perimeter) ~~considered in Appendix 3.B~~, it is determined that the circumferential bending stress from case 1 ~~in that appendix~~ is reduced by the factor "R" to obtain the corresponding stress from the combined case. R is computed as the ratio of moment magnitudes from the combined case to the results of case 1 alone.

R = (maximum bending moment from case 1 + case 3)/(maximum bending moment from case 1)
= 0.75/6.197 = 0.12

~~(results for individual cases are in Appendix 3.B)~~

Examination of the graphs from the moment distribution from the two solutions ~~in Appendix 3.B~~ shows that the individual terms always subtract and nearly cancel each other at every location.

Therefore, it is concluded that the maximum circumferential stress that develops under a pressure of 424 psi applied over one-half of the perimeter, and conservatively assumed balanced by inertia loading, is

Stress = 29,310 psi x 0.12 = 3517 psi

The stress due to a differential pressure of 10 psi (Table 2.2.1) is only 2.36% of the above value and needs no further evaluation for stress limits or deformation to demonstrate retrievability of the MPC.

3.4.7.3 Anchored HI-STORM Systems Under High-Seismic DBE (Load Case C in Table 3.1.1)

The anchored HI-STORM System (Figures 1.1.4 and 1.1.5) is assumed to be subjected to quasi-static inertial seismic loads corresponding to the ZPA design basis limits given in Table 2.2.8. The results from this quasi-static analysis are used to evaluate structural margins for the preloaded anchor studs and the sector lugs. In the quasi-static evaluation, the effect of the "rattling" of the MPC inside of the overpack is accounted for by the imposition of a dynamic load factor of 2.0 on the incremental stresses that arise during the seismic event. In addition to the quasi-static analysis, confirmatory 3-D dynamic analyses are performed using base acceleration excitation histories developed from two sets of response spectra. Figure 3.4.30 shows the two sets of response spectra that are assumed to be imposed at the top of the ISFSI pad. One set of response spectra is the Regulatory Guide 1.60 spectra for 5% damping with zero period acceleration conservatively amplified to 1.5 in each direction. This spectra set has been used as the input spectra at many nuclear plants in the U.S. (although generally, the ZPA was much below 1.0). Three statistically independent acceleration time histories (two horizontal labeled as "H1", "H2") and one vertical (labeled as "VT") have been developed. A twenty-second duration event was considered. Figures 3.4.31 to 3.4.33 show the time histories. The second set of response spectra used for time history analysis has similar levels of zero period acceleration but has higher peak spectral acceleration values in the low frequency range (2-3 Hz). This spectra set is the design basis set for a Pacific coast U.S. plant. Figures 3.4.34 to 3.4.36 (labeled as "FN", "FP" for the two horizontal acceleration histories and "FV" for the vertical acceleration time history), show the corresponding time histories simulating a long duration seismic event (170 seconds).

The objectives of the quasi-static and dynamic seismic analyses are the following:

i. Quantify the structural safety factor in the anchor studs and in the sector lugs that constitute the fastening system for the loaded HI-STORM 100A overpack. The structural safety factor is defined as the ratio of the permitted stress (stress intensity) per Subsection "NF" of the ASME Code to the maximum stress (stress intensity) developed in the loaded component.

ii. Compute the safety factor against fatigue failure of the anchor studs from a single seismic event.

iii. Quantify the interface loads applicable to the ISFSI pad to enable the ISFSI owner to design the ISFSI pad under the provisions of ACI-349 (85). The bounding interface loads computed for the maximum intensity seismic event (ZPA) and for extreme environmental loads may be used in pad design instead of the site-specific loads calculated for the loadings applicable to the particular ISFSI.

The above design objectives are satisfied by performing analyses of a loaded HI-STORM 100A System using a conservative set of input data and a conservative dynamic model. Calculations using the quasi-static model assume that the net horizontal inertia loads and the vertical inertia load correspond to the weight of the loaded cask times the appropriate ZPA. The results from the analyses are set down as the interface loads, and may be used in the ISFSI pad design work effort by the ISFSI owner. The information on the seismic analysis is presented in five paragraphs as follows:

Input data for analysis
Quasi-static model and results
Dynamic model and modeling assumptions.
Results of dynamic analysis
Summary of interface loads

a. Input Data for Analysis:

Key input data for the seismic analysis of a loaded HI-STORM 100A System is summarized in Table 3.4.10. As can be seen from Table 3.4.10, the input data used in the analysis is selected to bound the actual data, wherever possible, so as to maximize the seismic response. For example, a bounding weight of the loaded MPC and HI-STORM 100A overpack is used because an increase in the weight of the system directly translates into an increased inertial loading on the structure.

For quasi-static analysis, bounding ZPA values of 1.5 in all three directions are used with the vertical event directed upward to maximize the stud tension. The resulting ZPA's are then further amplified by the dynamic load factor (DLF=2.0) to reflect "rattling" of the MPC within the overpack. Input data for anchor stud lengths are representative. We consider long and short studs in order to evaluate the effect of stud spring rate.

For the confirmatory dynamic analyses, the time history base excitations are shown in Figures 3.4.31 through 3.4.36 and the propensity for "rattling" is included in the model.

b. Quasi-Static Model and Results

We consider the HI-STORM100A baseplate as a rigid plate resting on the ISFSI pad with the twenty-eight studs initially preloaded so as to impart a compressive load at the baseplate pad interface that is balanced by a tensile load in the studs prior to the seismic event occurring. The discrete studs are replaced by a thin ring located at the stud circle radius for analysis purposes. The thickness of the

thin ring is set so that the ring area is equal to the total stress area of the twenty-eight studs. Figure 3.4.37 shows a view of a segment of the baseplate with the outline of the ring. The ISFSI pad is represented by a linear spring and a rotational spring with spring constants determined from the exact solution for a rigid circular punch pressed into a elastic half-space. We assume that subsequent to pre-tensioning the studs, the seismic event occurs, represented by a net horizontal load DH and a net vertical load DV. In the analysis, the input loads DH and DV are:

$$G_H = (1.5^2 \times 2)^{1/2} \times DLF = 4.242 \; ; \quad G_V = 1.5 \times DLF = 3.0$$

$$DH = G_H \times 360{,}000 \text{ lb.} \; ; \quad DV = -G_V \times 360{,}000 \text{ lb}$$

DH is the magnitude of the vector sum of the two horizontal ZPA accelerations multiplied by the bounding HI-STORM 100A weight. Similarly, DV is an upward directed load due to the vertical ZPA acceleration. The upward direction is chosen in order to maximize the stud tension as the assemblage of studs and foundation resists overturning from the moment induced by DH applied at the centroid of the cask. Figure 3.4.38 shows the free-body diagram associated with the seismic event. Essentially, we consider an analysis of a pre-compressed interface and determine the interface joint behavior under the imposition of an external loading (note that this kind of analysis is well established in the pressure vessel and piping area where it is usually associated with establishing the effectiveness of a gasketed joint). An analysis is performed to determine the maximum stud tension that results if the requirement of no separation between baseplate and pad is imposed under the imposed loading. The following result is obtained from static equilibrium, for a preload stress of 60 ksi, when the "no separation condition" is imposed:

$$\frac{2a/3h_{cg}\left(F_{preload}/W+1\right)\left(1+\alpha_1\right)}{G_H - 2a/3h_{cg}\left(G_V(1+\alpha_1)/(1+\alpha)\right)} = 1.016$$

In the above equation,

$F_{preload}$ = (Total stress area of twenty-eight, 2" diameter studs) x 60 ksi = 4,200,000 lb.

W = Bounding weight of loaded HI-STORM 100A = 360,000 lb.

a = 73.25 inches,

h_{cg} = 118.5 inches

The coefficients α and α_1 relate the stiffness of the totality of studs to the stiffness of the foundation under direct loading and under rotation. The result given above is for the representative case of stud free length "L", equal to

L= 42 inches, which gives α and α_1 equal to 0.089 and 0.060, respectively.

A simplified confirmatory analysis of the above problem can be performed by considering the limiting case of a rigid baseplate and a rigid ISFSI pad. In the limit of a rigid ISFSI pad (foundation), the coefficients α and α_1 go to zero. A related solution for the case of a rigid baseplate and a rigid foundation can be obtained when the criteria is not incipient separation, but rather, a more "liberal" incipient rotation about a point on the edge of the baseplate. That solution is given in "Mechanical Design of Heat Exchangers and Pressure Vessel Components", by Singh and Soler (Arcturus Publishers, 1984). Theresult is (for 60 ksi prestress in each stud):

$$\frac{a/h_{cg}\left(F_{preload}/W+1\right)}{G_H - a/h_{cg}\left(G_V\right)} = 1.284$$

Although not a requirement of any design code imposed herein, the right hand side of the previous relationships can be viewed as the safety factor against incipient separation (or rotation about an edge) at the radius "a". Note that since we have assumed a bounding event, there is an additional margin of 1.5 in results since the Reg. Guide 1.60 event has not been applied with a ZPA in excess of 1.0.

For the real seismic event associated with a western U.S. plant having a slightly lower horizontal ZPA and a reduced vertical ZPA (see Figure 3.4.30). Using the same DLF =2.0 to account for "rattling" of the confined MPC:

$$G_H = 4.1 \quad ; \quad G_V = 2.6,$$

the aforementioned safety factors are:

SF (incipient separation) = 1.076
SF (incipient edging) = 1.372

The increment of baseplate displacement and rotation, up to incipient separation, is computed from the equilibrium and compatibility equations associated with the free body in Figure 3.4.38 and the change in stud tension computed. The following formula gives the stud tensile stress in terms of the initial preload and the incremental change from the application of the horizontal and vertical seismic load.

$$\sigma_{stud} = \sigma_{preload} + \alpha \frac{W}{NA_{stress}}\left(\frac{-G_V}{1+\alpha} + \left(\frac{3h_{cg}}{2a}\right)\left(\frac{c}{a}\right)\left(\frac{G_H}{1+\alpha_1}\right)\right)$$

In the above formula,

N = number of studs = 28 (maximum number based on HI-STORM dimensions). For lower seismic inputs, this might be reduced (in groups of 4 to retain symmetry).

A_{stress} = tensile stress area of a 2" diameter stud

2c = stud circle diameter

The results demonstrate that there is a relatively small change in stud stress from the initial pre-tension condition with the ISFSI pad foundation resisting the major portion of the overturning moment. For the geometry considered (maximum stud free length and nominal prestress), the maximum tensile stress in the stud increases by 9.1%. The following table summarizes the results from the quasi-static analysis using minimum ultimate strength for the stud to compute the safety factors. Note that under the seismic load, the direct stress in the stud is limited to 70% of the stud ultimate strength (per Appendix F of the ASME Code Section III). The allowable pad compressive stress is determined from the ACI Code assuming confined concrete and the minimum concrete compressive strength from Table 2.0.4. Because of the large compressive load at the interface from the pre-tensioning operation, the large frictional resistance inhibits sliding of the cask. Consequently, there will be no significant shear stress in the studs. Safety factors for sliding are obtained by comparing the ratio of horizontal load to vertical load with the coefficient of friction between steel and concrete (0.53). Values in parenthesis represent results obtained using ZPA values associated with the real seismic event for the western U.S. plant instead of the bounding Reg. Guide 1.60 event.

SUMMARY OF RESULTS FOR STUDS AND INTERFACE FROM QUASI-STATIC SEISMIC EVALUATION WITH DLF = 2.0, Stud Prestress = 60 ksi			
Item	**Calculated Value**	**Allowable Value**	**Safety Factor = (Allowable Value/Calculated Value)**
Stud Stress(ksi) (42" stud free length)	65.48 (65.18)	87.5	1.336 (1.343)
Maximum Pad Pressure (ksi)(42" stud free length)	3.126 (3.039)	4.76	1.52 (1.57)
Stud Stress (ksi)(16" stud free length)	73.04 (72.34)	87.5	1.20 (1.21)
Maximum Pad Pressure(ksi) (16" stud free length)	2.977 (2.898)	4.76	1.60 (1.64)
Overpack Sliding	0.439 (0.407)	0.53	1.21 (1.31

The effect of using a minimum stud free length in the embedment design is to increase the values of the coefficients α and α_1 because the stud stiffness increases. The increase in stud stiffness, relative to the foundation stiffness results in an increase in incremental load on the studs. This Is a natural and expected characteristic of preloaded configurations. It is noted that the stud safety factors are based on minimum ultimate strength and can be increased, without altering the calculated results, by changing the stud material.

The quasi-static analysis methodology has also been employed to evaluate the effects of variation in the initial prestress on the studs. The following tables reproduce the results above for the cases of lower bound stud prestress (55 ksi) and upper bound stud prestress (65 ksi) on the studs. Only the results using the values associated with the Reg. Guide 1.60 bounding event are reported.

SUMMARY OF RESULTS FOR STUDS AND INTERFACE FROM QUASI- STATIC SEISMIC EVALUATION WITH DLF = 2.0, Stud Prestress = 55 ksi			
Item	**Calculated Value**	**Allowable Value**	**Safety Factor = (Allowable Value/Calculated Value)**
Stud Stress(ksi) (42" stud free length)	60.48	87.5	1.45
Maximum Pad Pressure (ksi)(42" stud free length)	3.012	4.76	1.58
Stud Stress (ksi)(16" stud free length)	68.07	87.5	1.29
Maximum Pad Pressure(ksi) (16" stud free length)	2.862	4.76	1.663
Overpack Sliding	0.488	0.53	1.09

SUMMARY OF RESULTS FOR STUDS AND INTERFACE FROM QUASI- STATIC SEISMIC EVALUATION WITH DLF = 2.0, Stud Prestress = 65 ksi			
Item	**Calculated Value**	**Allowable Value**	**Safety Factor = (Allowable Value/Calculated Value)**
Stud Stress(ksi) (42" stud free length)	70.48	87.5	1.24
Maximum Pad Pressure (ksi)(42" stud free length)	3.24	4.76	1.47
Stud Stress (ksi)(16" stud free length)	78.07	87.5	1.12
Maximum Pad Pressure(ksi) (16" stud free length)	3.091	4.76	1.54
Overpack Sliding	0.399	0.53	1.33

The results above confirm the expectations that an increase in preload increases the safety factor against sliding. The calculated coefficient of friction in the above tables is computed as the ratio of applied horizontal load divided by available vertical load. For all combinations examined, ample margin against incipient separation at the interface exists.

Based on the results from the quasi-static analysis, an assessment of the safety factors in the sector lugs is obtained by performing a finite element analysis of a repeated element of one of the sector lugs. Figure 3.4.39 shows the modeled section and the finite element mesh. The stud load is conservatively applied as a uniform downward pressure applied over a 5"x5" section of the extended baseplate simulating the washer between two gussets. This is conservative as the rigidity of the washer is neglected. The opposing pressure loading from the interface pressure is applied as a pressure over the entire extended baseplate flat plate surface. Only one half the thickness of each gusset plate is included in the model. Two cases are considered: (1) the pre-loaded state (a Normal Condition of Storage-Level A stress limits apply); and, (2), the seismic load condition at the location of the maximum tensile load in a stud (an Accident Condition of Storage – Level D stress intensity limits apply). Figures 3.4.40 and 3.4.41 present the stress results for the following representative input conditions:

Level A analysis - Preload stress/bolt = 60 ksi

Level D analysis - Maximum Bolt stress(includes seismic increment) = 65.5 ksi

In the Level A analysis, the resisting local foundation pressure exactly balances the preload. For the Level D analysis, the opposing local foundation pressure = 190 psi (average over the area between gussets. This represents the reduced pressure under the highest loaded stud under the induced rotation of the storage system.

The most limiting weld stress is obtained by evaluating the available load capacity of the fillet weld attaching the extended baseplate annulus region to the gussets (approximately 25 inches of weld per segment) using a limit strength equal to 42% of the ultimate strength of the base material.

The following table summarizes the limiting safety factors for the sector lugs. Allowable values for primary bending stress and stress intensity are from Tables 3.1.10 and 3.1.12 for SA-516 Grade 70 @ 300 degrees F.

SUMMARY OF RESULTS FOR SECTOR LUGS FROM QUASI-STATIC SEISMIC EVALUATION			
Item	**Calculated Value**	**Allowable Value**	**Safety Factor = (Allowable Value/Calculated Value)**
Maximum Primary Membrane + Bending Stress Away From Loaded Region and Discontinuity (ksi) – Case 1 - Preload	15.62	26.3	1.68
Maximum Primary Membrane + Bending Stress Intensity Away From Loaded Region and Discontinuity (ksi) – Case 2 - Preload + Seismic	36.67	60.6	1.65
Maximum Weld Shear Load (kips)	150.8	194.9	1.29

c. Dynamic Model and Modeling Assumptions:

The dynamic model of the HI-STORM 100A System consists of the following major components.

i. The HI-STORM 100 overpack is modeled as a six degree-of-freedom (rigid body) component.

ii. The loaded MPC is also modeled as a six degree-of-freedom (rigid body) component that is free to rattle inside the overpack shell. Gaps between the two bodies reflect the nominal dimensions from the drawings.

iii. The contact between the MPC and the overpack is characterized by a coefficient of restitution and a coefficient of friction. For the dynamic analysis, the coefficient of restitution is set to 0.0, reflecting the large areas of nearly flat surface that come into contact and have minimal relative rebound. The coefficient of friction is set to 0.5 between all potentially contacting surfaces of the MPC/overpack interface.

iv. The anchor studs, preloaded to axial stress σ_i (Table 3.4.10), induce a contact stress between the overpack base and the ISFSI pad. The loaded cask-pad interface can support a certain amount of overturning moment before an uplift (loss of circularity of the contact patch) occurs. The anchor studs are modeled as individual linear springs connecting the periphery of the extended baseplate to the ISFSI pad section. The resistance of the foundation is modeled by a vertical linear spring and three rotational springs connected between the cask baseplate center point and the surface of the flat plate modeling the driven ISFSI pad. The ISFSI pad is driven with the three components of acceleration time history applied simultaneously.

The HI-STORM 100A dynamic model described above is implemented on the public domain computer code WORKING MODEL (also known as VisualNastran) (See Subsection 3.6.2 for a description of the algorithm).

Figures 3.4.42 and 3.4.43 show the rigid body components of the dynamic model before and after assembly. The linear springs are not shown. Mass and inertia properties of the rigid bodies are consistent with the bounding property values in Table 3.4.10.

c. Results of Dynamic Analysis

Figures 3.4.44 –3.4.47 show results of the dynamic analysis using the Reg. Guide 1.60 seismic time histories as input accelerations to the ISFSI pad. Figure 3.4.44 shows variation in the vertical foundation compressive force. Figure 3.4.45 shows the corresponding load variation over time for the stud having the largest instantaneous tensile load. An initial preload of approximately 150,000 lb is applied to each stud (corresponding to 60,160 psi stud tensile stress). This induces an initial compression load at the interface approximately equal to 571,000 lb. (including the dead weight of the loaded HI-STORM). Figures 3.4.44 and 3.4.45 clearly demonstrate that the foundation resists the majority of the oscillatory and impactive loading as would be expected of a preloaded configuration. Figure 3.4.46 shows the impulse (between the MPC and HI-STORM 100A) as a function of time. It is clear that the "spikes" in both the foundation reaction and the stud load over the total time of the event are related to the impacts of the rattling MPC. The results provide a graphic demonstration that the rattling of the MPC inside the overpack must be accounted for in any quasi-static representation of the event. The quasi-static results presented herein for the anchored system, using a DLF = 2.0, are in excellent agreement with the dynamic simulation results.

We note that the dynamic simulation, which uses an impulse-momentum relationship to simulate the rattling contact, leads to results having a number of sharp peaks. Given that the stress intensity limits in the Code assume static analyses, filtering of the dynamic results is certainly appropriate prior to comparing with any static allowable strength. We conservatively do not perform any filtering of the

results prior to comparison with the quasi-static analysis; we note only that any filtering of the dynamic results to eliminate high-frequency effects resulting from the impulse-momentum contact model would increase the safety factorsFinally, Figure 3.4.47 shows the ratio of the net interface horizontal force (needed to maintain equilibrium) to the instantaneous compression force at the ISFSI pad interface with the base of the HI-STORM 100A. This ratio, calculated at each instant of time from the dynamic analysis results using the Reg. Guide 1.60 event, represents an instantaneous coefficient of friction that is required to ensure no interface relative movement. Figure 3.4.47 demonstrates that the required coefficient of friction is below the available value 0.53. Thus, the dynamic analysis confirms that the foundation interface compression, induced by the preloading action, is sufficient to maintain a positive margin against sliding without recourse to any resistance from the studs.

The results of the dynamic analysis using acceleration time histories from the Reg. Guide 1.60 response spectra (grounded at 1.5 g's) confirm the ability of the quasi-static solution, coupled with a dynamic load factor, to correctly establish structural safety factors for the anchored cask. The dynamic analysis confirms that stud stress excursions from the preload value are minimal despite the large overturning moments that need to be balanced.

A second dynamic simulation has been performed using the seismic time histories appropriate to a pacific coast U.S. nuclear plant (Figures 3.4.34-3.4.36). The ZPA of these time histories are slightly less than the Reg. Guide 1.60 time histories but the period of relatively strong motion extends over a longer time duration. The results from this second simulation exhibit similar behavior as those results presented above and provide a second confirmation of the validity of the safety factors predicted by the quasi-static analysis. Reference [3.4.14] (see Subsection 3.8) provides archival information and backup calculations for the results summarized here.

Stress cycle counting using Figure 3.4.45 suggests 5 significant stress cycles per second provides a bounding number for fatigue analysis. A fatigue reduction factor of 4 is appropriate for the studs (per ASME Code rules). Therefore, a conservative analysis of fatigue for the stud is based on an alternating stress range of:

S(alt) = .5 x (22,300 psi) x 4 = 44,600 psi for 5 cycles per second. The value for the stress range is obtained as the difference between the largest tensile stress excursions from the mean value as indicated in the figure.

To estimate fatigue life, we use a fatigue curve from the ASME Code for high strength steel bolting materials (Figure I.9.4 in Appendix I, ASME Code Section III Appendices) For an amplified alternating stress intensity range of 44,600 psi, Figure I.9.4 predicts cyclic life of 3,000 cycles. Therefore, the safety factor for failure of a stud by fatigue during one Reg. Guide 1.60 seismic event is conservatively evaluated as:

SF(stud fatigue) = 3,000/100 = 30.

For the long duration event, even if we make the conservative assumption of a nine-fold increase in full range stress cycles, the safety factor against fatigue failure of an anchor stud from a single seismic event is 3.33. Recognizing that the fatigue curve itself is developed from test data with a safety factor of 20 on life and 4 on stress, the results herein demonstrate that fatigue failure of the anchor stud, from a single seismic event, is not credible.

d. Summary of Interface Loads for ISFSI Pad Design

Bounding interface loads are set down for use by the ISFSI pad designer and are based on the validated quasi-static analysis and a dynamic load factor of 2.0:

BOUNDING INTERFACE LOADS FOR ISFSI PAD STRUCTURAL/SEISMIC DESIGN	
D (Cask Weight)	360 kips
D (Anchor Preload @ 65 ksi)	4,550 kips
E (Vertical Load)	1,080 kips
E (Net Horizontal Surface Shear load)	1,527.35 kips
E (Overturning Moment)	15,083 kip-ft.

3.4.8 Tornado Wind and Missile Impact (Load Case B in Table 3.1.1 and Load Case 04 in Table 3.1.5)

During a tornado event, the HI-STORM 100 System is assumed to be subjected to a constant wind force. It is also subject to impacts by postulated missiles. The maximum wind speed is specified in Table 2.2.4 and the three missiles, designated as large, intermediate, and small, are described in Table 2.2.5.

In contrast to a freestanding HI-STORM 100 System, the anchored overpack is capable of withstanding much greater lateral pressures and impulsive loads from large missiles. The quasi-static analysis result, presented in the previous subsection, can be used to determine a maximum permitted base overturning moment that will provide at least the same stud safety factors. This is accomplished by setting $G_V = 0.0$, DLF =1 and finding an appropriate G_H that gives equal or better stud safety factors. The resulting value of G^*_H establishes the limit overturning moment for combined tornado missile plus wind., M_L. (G^*_H x Weight x h_{cg}) is conservatively set as the maximum permissible moment at the base of the cask due to combined action of lateral wind and tornado missile loading. Thus, if the lateral force from a tornado missile impact is F at height h and that from steady tornado wind action is a resultant force W acting at cask mid-height (0.5H), and the two loads are acting synergistically to overturn the cask, then their magnitudes must satisfy the inequality

$$0.5WH + Fh \leq M_L$$

where the limit moment is established to ensure that the safety factors for seismic load remain bounding.

M_L = 18,667 kip-ft.

Tornado missile impact factors should be factored into "F" prior to determining the validity of the above inequality for any specific site.

In the case of a free-standing system, the post impact response of the HI-STORM 100 System is required to assess stability. Both the HI-STORM 100 storage overpack, and the HI-TRAC transfer cask are assessed for missile penetration.

~~Appendix 3.C contains~~ *The* results for the post-impact response of the HI-STORM 100 storage overpack ~~where it is~~ demonstrated ~~there~~ that the combination of tornado missile plus either steady tornado wind or instantaneous tornado pressure drop causes a rotation of the HI-STORM 100 to a maximum angle of inclination less than 3 degrees from vertical. This is much less than the angle required to overturn the cask. ~~The appropriate value for the drag coefficient used in the computation of the lateral force on the storage overpack from tornado wind is justified in Appendix 3.C.~~ The results for the HI-STORM 100 are bounding since the HI-STORM 100S has a lower center of gravity when loaded.

~~Appendix 3.C computes t~~*T*he maximum force (not including the initial pulse due to missile impact) acting on the projected area of the storage overpack *is computed* to be:

F = 91,920 lbs.

The instantaneous impulsive force due to the missile strike is not computed here; its effect is felt as an initial angular velocity imparted to the storage overpack at time equal to zero. The net resultant force due to the simultaneous pressure drop is not an all-around distributed loading that has a net resultant, but rather is more likely to be distributed only over 180 degrees (or less) of the storage overpack periphery. The circumferential stress and deformation field will be of the same order of magnitude as that induced by a seismic loading. Since the magnitude of the force due to F is less than the magnitude of the net seismically induced force considered in Subsection 3.4.7, the storage overpack global stress analysis performed in Subsection 3.4.7 remains governing. In the next subsection, results are provided for the circumferential stress and ovalization of the portion of the storage overpack due to the bounding estimate for the impact force of the intermediate missile.

3.4.8.1 HI-STORM 100 Storage Overpack

~~Appendix 3.C~~ *This subsection* considers the post impact behavior of the HI-STORM 100 System after impact from tornado missiles. During an impact, the system consisting of missile plus storage overpack and MPC satisfies conservation of linear and angular momentum. The large missile impact is assumed to be inelastic. This assumption conservatively transfers all of the momentum from the missile to the system. The intermediate missile and the small missile are assumed to be unyielding and hence the entire initial kinetic energy is assumed to be absorbed by motion of the cask and local yielding and denting of the storage overpack surface. It is shown that cask stability is maintained under the postulated wind and large missile loads. The conclusion is also valid for the HI-STORM 100S since its lower center of gravity inherently provides additional stability margin.

The penetration potential of the missile strikes (Load Case 04 in Table 3.1.5) is examined *first*~~in Appendix 3.G~~. ~~It is shown in Appendix 3.G~~ *The detailed calculations show* that there will be no penetration through the concrete surrounding the inner shell of the storage overpack or penetration of the top closure plate. Therefore, there will be no impairment to the confinement boundary due to missile strikes during a tornado. Since the inner shell is not compromised by the missile strike, there will be no permanent deformation of the inner shell. Therefore, ready retrievability is assured after the missile strike. The following *paragraphs* ~~results~~ summarize the *analysis* work ~~in Appendix 3.G~~.

a. The small missile will dent any surface it impacts, but no significant puncture force is generated. The 1" missile can enter the air ducts, but geometry prevents a direct impact with the MPC.

b. The following table summarizes the denting and penetration analysis performed for the intermediate missile ~~in Appendix 3.G~~. Denting is used to connote a local deformation mode encompassing material beyond the impacting missile envelope, while penetration is used to connote a plug type failure mechanism involving only the target material immediately under the impacting missile.

Location	Denting (in.)	Thru-Thickness Penetration
Storage overpack outer Shell	6.87	Yes (>0.75 in.)
Radial Concrete	9.27	No (<27.25 in.)
Storage overpack Top Lid	0.4	No (<4 in.)

The primary stresses that arise due to an intermediate missile strike on the side of the storage overpack and in the center of the storage overpack top lid are ~~also~~ determined *next* ~~in Appendix 3.G~~. The analysis of the storage lid for the HI-STORM 100 bounds that for the HI-STORM 100S; because of the additional energy absorbing material (concrete) in the direct path of a potential missile strike on the top lid of the HI-STORM 100S lid, the energy absorbing requirements of the circular plate structure are much reduced. ~~It is demonstrated there~~ *The analysis demonstrates* that Level D stress limits are not exceeded in either the overpack outer shell or the top lid. The safety factor in the storage overpack, considered as a cantilever beam under tip load, is computed, as is the safety factor in the top lids, considered as two centrally loaded plates. The applied load, in each case, is the missile impact load. A summary of the results for axial stress in the storage overpack~~, as obtained from Appendix 3.G,~~ is given in the table below:

HI-STORM 100 MISSILE IMPACT - Global Axial Stress Results			
Item	**Value (ksi)**	**Allowable (ksi)**	**Safety Factor**
Outer Shell – Side Strike	14.35	39.75	2.77
Top Lid - (End Strike)	44.14	*57.0~~59.65~~*	*1.29~~1.351~~*

To demonstrate ready retrievability of the MPC, we must show that the storage overpack suffers no permanent deformation of the inner shell that would prevent removal of the MPC after the missile strike. To demonstrate ready retrievability (for both HI-STORM 100 and for HI-STORM 100S) a conservative evaluation of the circumferential stress and deformation state due to the missile strike on the outer shell *is* ~~was~~ performed. ~~Appendix 3.G calculates a~~ *A* conservative estimate for the 8" diameter missile impact force, "Pi", on the side of the storage overpack *is calculated* as:

Pi = 843,000 lb.

This force is conservative in that the target overpack is assumed rigid; any elasticity serves to reduce the peak magnitude of the force and increase the duration of the impact. The use of the upper bound value is the primary reason for the high axial stresses resulting from this force. To demonstrate continued ability to retrieve the MPC subsequent to the strike, circumferential stress and deformation that occurs locally in the ring section near the location of the missile strike are investigated.

~~Results in Appendix 3.B are presented under different ring loadings.~~ *Subsection 3.4.7 presents stress and displacement results* for a composite ring of unit width consisting of the inner and outer shells of the storage overpack. The solutions ~~in Appendix 3.B~~ assumes that the net loading is 56,184 lb. applied on the 1" wide ring (equivalent to a 45G deceleration applied uniformly along the height on a storage overpack weight of 270,000 lb.). ~~The~~ *This* solution ~~for case1 in Appendix 3.B~~ can be applied directly to evaluate the circumferential stress and deformation caused by a tornado missile strike on the outer shell. Using the results *for the 45g tipover event* ~~in Appendix 3.B~~, an attenuation factor to adjust the results ~~from case 1 in Appendix 3.B~~ is developed that reflects the difference in load magnitude and the width of the ring that is effective in resisting the missile strike force. The strike force Pi is resisted by a combination of inertia force and shear resistance from the portion of the storage overpack above and below the location of the strike. The ring theory solution to determine the circumferential stress and deformation conservatively assumes that inertia alone, acting on an effective length of ring, balances the applied point load Pi. The effective width of ring that balances the impact load is conservatively set as the diameter of the impacting missile (8") plus the effect of the "bending boundary layer" length. This boundary layer length is conservatively set as a multiple of twice the square root of the product of mean radius times the average thickness of two shells making up the cylindrical body of the storage overpack. ~~From Appendix 3.B, t~~*T*he mean radius of the composite cylinder and the average thickness of the inner and outer shells~~,~~ are

R_{mean} = 48"

T =.5 x (.75"+1.25") = 1"

The bending boundary layer "β" in a shell is generally accepted to be given as $(2(R_{mean}T)^{1/2})$ = 13.85" for this configuration. That is, the effect of a concentrated load is resisted mainly in a length along the shell equal to the bending boundary layer. For a strike away from the ends of the shell, a boundary layer length above and below the strike location would be effective (i.e., double the boundary layer length). However, to conservatively account for resistance above and below the location of the strike, this calculated result is only increased by 1.5 in the following analysis (rather than 2). Therefore, the effective width of ring is assumed as:

13.85" x 1.5 + 8" = 28.78"

The solution for *the 45g tipover event* ~~case 1 in Appendix 3.B~~ (performed for a unit ring width and a load of 56,184 lb.) is directly applicable if we multiply all stress and displacement results by the factor "Y" where

Y = (1"/28.78") x (843,000 lb./56,184 lb.) = 0.521

Using this factor ~~on the solution in Appendix 3.B, (Attachment B-1, Case 15.16)~~ gives the following bounding results for maximum circumferential stresses (without regard for sign and location of the stress) and deformations due to the postulated tornado missile strike on the side of the storage overpack outer shell:

Maximum circumferential stress due to bending moment = (29,310 psi x Y) = 15,271 psi

Maximum circumferential stress due to mean tangential force = (18,900 lb./2 sq.inch) x Y = 4,923 psi

Change in diameter in the direction of the load = -0.11" x Y = -0.057"

Change in diameter perpendicular to the direction of the load = +0.06" x Y = 0.031"

Based on the above calculation, the safety factor on maximum stress for this condition is

SF = 39,750psi/15,271 psi = 2.60

The allowable stress for the above calculation is the Level D membrane stress intensity limit from Table 3.1.12. This is a conservative result since the stress intensity is localized and need not be compared to primary membrane stress intensity. Even with the overestimate of impact strike force used in the calculations here ~~and in Appendix 3.G~~, the stresses remain elastic and the calculated diameter changes are small and do not prevent ready retrievability of the MPC. Note that because the stresses remain in the elastic range, there will be no post-strike permanent deformation of the inner shell.

3.4.8.2 HI-TRAC Transfer Cask

3.4.8.2.1 Intermediate Missile Strike

HI-TRAC is always held by the handling system while in a vertical orientation completely outside of the fuel building (see Chapter 2 and Chapter 8). Therefore, considerations of instability due to a tornado missile strike are not applicable. However, the structural implications of a missile strike require consideration.

The penetration potential of the 8" missile strike on HI-TRAC (Load Case 04 in Table 3.1.5) is examined *at two locations*~~in Appendix 3.H. Two locations are examined~~:

1. the lead backed outer shell of HI-TRAC.
2. the flat transfer lid consisting of multiple steel plates with a layer of lead backing.

In each case, it is shown that there is no penetration consequence that would lead to a radiological release. The following *paragraphs* ~~results~~ summarize the *analysis results*~~analyses in Appendix 3.H~~.

a. The small missile will dent any surface it impacts, but no significant puncture force is generated.

b. The following table summarizes the denting and penetration analysis performed for the intermediate missile~~ in Appendix 3.H~~. Denting connotes a local deformation mode encompassing material beyond the impacting missile envelope, while penetration connotes a plug type failure mechanism involving only the target material immediately under the impacting missile. Where there is through-thickness penetration, ~~it is shown in Appendix 3.H that~~ *the* lead and *the* inner plate absorb any residual energy remaining after penetration of the outer plate in the 100 Ton HI-TRAC transfer lid. ~~Both the HI-TRAC 125 and HI-TRAC 100 transfer casks are evaluated in Appendix 3.H.~~ The table summarizes the bounding results *for both transfer casks*.

Location	Denting (in.)	Thru-Thickness Penetration
Outer Shell - lead backed	0.498	No (<1.0 in.)
Outer Transfer Lid Door	0.516	No (<0.75 in.) (HI-TRAC 125) Yes (>0.5 in.) (HI-TRAC 100)

The 8" missile will not penetrate the pool lid for the HI-TRAC 125D because it has a thicker bottom plate than the HI-TRAC 125 transfer lid door. In addition, the results for the 8" missile strike on the HI-TRAC outer shell are valid for the HI-TRAC 125D since all three transfer casks have the same outer shell thickness.

While the transfer cask is being transported in a horizontal orientation, the MPC lid is exposed. We conservatively assume no protective plate in place during this transport operation and evaluate the capacity of the lid peripheral groove weld to resist the impact load. The *calculated* result ~~of calculations in Appendix 3.H~~, conservatively based on a reduced 5/8" weld, is as follows:

HI-TRAC MISSILE IMPACT - Capacity Results			
Item	**Value (lb)**	**Capacity (lb)**	**Safety Factor = Capacity/Value**
Top Lid Weld	2,262,000	2,789,000	1.23

The final calculation in this subsection is an evaluation of the circumferential stress and deformation consequences of the horizontal missile strike on the periphery of the HI-TRAC shell. It is assumed that the HI-TRAC is simply supported at its ends (while in transit) and is subject to a direct impact from the 8" diameter missile. To compute stresses, an estimate of the peak impact force is required. The effect of the water jacket to aid in the dissipation of the impact force is conservatively neglected. The only portion of the HI-TRAC cylindrical body that is assumed to resist the impact load is the two metal shells. The lead is assumed only to act as a separator to maintain the spacing between the shells. The previous results from the lead slump analysis demonstrate that this conservative assumption on the behavior of the lead is valid. The peak value of the impact force is a function of the stiffness of the target. The target stiffness in this postulated event has the following contributions to the stiffness of the structure.

a. a global stiffness based on a beam deformation mode, and
b. a local stiffness based on a shell deformation mode

~~Appendix 3.Z contains information on the two transfer casks that permit the calculation of a global spring constant (i.e. the inverse of the global deflection of the cask body as a beam under a unit concentrated load). This~~ *The global* spring constant *(i.e., the inverse of the global deflection of the cask body as a beam under a unit concentrated load)*~~, however,~~ is a function of location of the strike along the length of the cask. The spring constant value varies from a minimum for a strike at the half-height to a maximum value for a strike near the supports (the trunnions). Since the peak impact force is larger for larger stiffness, it is conservative to maximize the spring constant value. Therefore, in the calculation, we neglect this spring constant for the computation of peak impact force and focus only on the spring constant arising from the local deformation as a shell, in the immediate vicinity of the strike. To this end, the spring constant is estimated by considering the three-dimensional effects of the shell solution to be replaced by the two-dimensional action of a wide ring. The width of the ring is equal to the "bending boundary layer" length on either side of the strike location plus the diameter of the striking missile. Following the analysis methodology already utilized subsection 3.4.8.1, the following information is obtained ~~from Appendix 3.AM~~:

The mean radius of the composite cylinder and the average thickness of the inner and outer shells, are (use the 100 Ton HI-TRAC data since it provides an upper bound on stress and deformation):

$R_{mean} = 36.893$

T =.5 x (.75"+1.00") = 0.875"

The bending boundary layer "β" in a shell is generally accepted to be given as $(2(R_{mean}T)^{1/2})$. To account for resistance above and below the location of the strike, this calculated result is conservatively increased by multiplying by 1.5. Therefore, the effective width of ring is:

11.22" x 1.5 + 8" = 24.84"

~~Appendix 3.AM contains a ring analysis of~~ *The missile impact is modeled as* a point load, *acting on the ring,* of magnitude equal to Pi = 20,570 lb. The use of a point load in the analysis is conservative in that it overemphasizes the local stress. The actual strike area is an 8" diameter circle (or larger, if the effect of the water jacket were included).

The force is assumed resisted by inertia forces in the ring section. From the results ~~in Appendix 3.AM~~, a spring constant can be defined as the applied load divided by the change in diameter of the ring section in the direction of the applied load. ~~Using the configuration and results in Appendix 3.AM~~*Based on this approach,* the following local spring constant is obtained:

$K = Pi/D1_H = Pi/0.019" = 1{,}083{,}000$ lb./inch

To determine the peak impact force, a dynamic analysis of a two-body system has been performed using the "Working Model" dynamic simulation code. A two mass-spring damper system is considered with the defined spring constant representing the ring deformation effect. Figure 3.4.24 shows the results from the dynamic analysis of the impact using the computer code "Working Model". The small square mass represents the missile, while the larger mass represents the portion of the HI-TRAC "ring" assumed to participate in the local impact. The missile weight is 275.5 lb. and the participating HI-TRAC weight is set to the weight of the equivalent ring used to determine the spring constant.

The peak impact force that results in each of the two springs used to simulate the local elasticity of the HI-TRAC (ring) is:

F(spring) = 124,400 lb.

Since there are two springs in the model, the total impact force is:

P(impact) = 248,800 lb.

To estimate circumferential behavior of the ring under the impact, the *previous* solution ~~in Appendix 3.AM~~ (using a load of 20,570 lb.) is used and amplified by the factor "Z", where:

Z = 248,800 lb./20,570 lb. = 12.095

~~From Appendix 3.AM~~*Consequently*, the maximum circumferential stress due to the ring moment, away from the impact location, is:

3,037psi x (69,260 in-lb/180,900 in-lb) x Z = 14,230 psi

At the same location, the mean stress adds an additional component (~~Appendix 3.AM gives the mean tangential force in the ring;~~ the ring area is computed based on the effective width of the ring).

(5,143 lb./43.47 sq.in) x Z = 1431 psi

Therefore, the safety factor on circumferential stress causing ovalization of an effective ring section that is assumed to resist the impact is:

SF(ring stress) = 39,750 psi/(1431psi + 14,230psi) = 2.54

The allowable stress for this safety factor calculation is obtained from Table 3.1.12 for primary membrane stress intensity for a Level D event at 350 degrees F material temperature. Noting that the actual circumferential stress in the ring remains in the elastic range, it is concluded that the MPC remains readily retrievable after the impact since there is no permanent ovalization of the cavity after the event. As noted previously, the presence of the water jacket adds an additional structural barrier that has been conservatively neglected in this analysis.

3.4.8.2.2 Large Missile Strike

The effects of a large tornado missile strike on the side (water jacket outer enclosure) of a loaded HI-TRAC has been simulated using a transient finite element model of the transfer cask and loaded MPC. The transient finite element code LSDYNA3D has been used (approved by the NRC for use in impact analysis (see Appendix 3.A, reference [3.A.4] for the benchmarking of this computer code)). An evaluation of MPC retrievability and global stress state (away from the impact area) are of primary interest. The finite element model includes the loaded MPC, the HI-TRAC inner and outer shells, the HI-TRAC water jacket, the lead shielding, and the appropriate HI-TRAC lids. The water in the water jacket has been neglected for conservatism in the results. The large tornado missile has been simulated by an impact force-time pulse applied on an area representing the frontal area of an 1800-kg. vehicle. The force-time data used has been previously approved by the USNRC (Bechtel Topical Report BC-TOP-9A, "Design of Structures for Missile Impact", Revision 2, 9/1974). The frontal impact area used in the finite element analysis is that area recommended in NUREG-0800, SRP 3.5.1.4, Revision 2, 1981).

~~Appendix 3.AN describes the finite element model, the input data used, and provides graphical results necessary to the evaluation of retrievability and state of stress.~~ A summary of the results ~~from~~

~~Appendix 3.AN~~ is presented below for the HI-TRAC 100 and HI-TRAC 125 transfer casks. Since the dimensions of the inner shell, the outer shell, the lead shielding, and the water jacket enclosure panels are the same in both the HI-TRAC 125 and the HI-TRAC 125D, the results from the HI-TRAC 125 are considered accurate for the HI-TRAC 125D. The allowable value listed for the stress intensity for this Level D event comes from Table 3.1.17.

The results from the dynamic analysis have been summarized below.

SUMMARY OF RESULTS FROM LARGE TORNADO MISSILE IMPACT ANALYSIS		
ITEM – HI-TRAC 100	**CALCULATED VALUE**	**ALLOWABLE VALUE**
Maximum Stress Intensity in Water Jacket (ksi)	28.331	58.7
Maximum Stress Intensity in Inner Shell (ksi)	11.467	58.7
Maximum Plastic Strain in Water Jacket	0.0000932	-
Maximum Plastic Strain in Inner Shell	0.0	-

ITEM – HI-TRAC 125	CALCULATED VALUE	ALLOWABLE VALUE
Maximum Stress Intensity in Water Jacket (ksi)	19.073	58.7
Maximum Stress Intensity in Inner Shell (ksi)	6.023	58.7
Maximum Plastic Strain in Water Jacket	0.0	-
Maximum Plastic Strain in Inner Shell	0.0	-

The above results demonstrate that:

1. The retrievability of the MPC in the wake of a large tornado missile strike is not adversely affected since the inner shell does not experience any plastic deformation.

2. The maximum primary stress intensity, away from the impact interface on the HI-TRAC water jacket, is below the applicable ASME Code Level D allowable limit for NF, Class 3 structures.

3.4.9 HI-TRAC Drop Events (Load Case 02.b in Table 3.1.5)

During transit, the HI-TRAC 125 or HI-TRAC 100 transfer cask may be carried horizontally with the transfer lid in place. Analyses have been performed to demonstrate that under a postulated carry height; the design basis 45g deceleration is not exceeded. The analyses have been performed using two different simulation models. A simplified model of the drop event is performed using the computer simulation code "Working Model 2D". The analysis using "Working Model 2D" assumed the HI-TRAC and the contained MPC acted as a single rigid body. A second model of the drop event uses DYNA3D, considers the multi-body analysis of HI-TRAC and the contained MPC as individual bodies, and is finite element based. In what follows, we outline the problem and the results obtained using each solution methodology.

3.4.9.1 Working Model 2D Analysis of Drop Event

The analysis model conservatively neglects all energy absorption by any component of HI-TRAC; all kinetic energy is transferred to the ground through the spring-dampers that simulate the foundation (ground). If the HI-TRAC suffers a handling accident causing a side drop to the ground, impact will only occur at the top and bottom ends of the vessel. The so-called "hard points" are the top end lifting trunnions, the bottom end rotation trunnions, and the projecting ends of the transfer lid. Noting that the projecting hard points are of different dimensions and will impact the target at different times because of the HI-TRAC geometry, any simulation model must allow for this possibility.

A dynamic analysis of a horizontal drop, with the lowest point on the HI-TRAC assumed 50" above the surface of the target (larger than the design basis limit of 42"), is considered ~~in Appendix 3.Z~~ for the HI-TRAC 125 and for the HI-TRAC 100. Figure 3.4.22 shows the transfer cask orientation. The HI-TRAC is considered as a rigid body (~~Appendix 3.Z contains~~ calculations ~~that~~ demonstrate that the lowest beam mode frequency is well above 33 Hz so that no dynamic amplification need be included). The effects of the ISFSI pad and the underlying soil are included using a simple spring-damper model based on a static classical Theory of Elasticity solution. The "worst" orientation of a horizontally carried HI-TRAC with the transfer cask impacting an elastic surface is considered. The HI-TRAC is assumed to initially impact the target with the impact force occurring over the rectangular surface of the transfer lid (11.875" x 81"). "Worst" is defined here as meaning an impact at a location having the maximum value of an elastic spring constant simulating the resistance of the target interface. ~~Appendix 3.AL provides the calculation of the elastic spring-damper that simulates the contact spring.~~ The geometry and material properties ~~used in Appendix 3.AL~~ reflect the USNRC accepted reference pad and soil (Table 2.2.9 - the pad thickness used is 36" and the Young's Modulus of the elastic soil is the upper limit value E=28,000 psi). The use of an elastic representation of the target surface is conservative as it minimizes the energy absorption capacity of the target and maximizes the deceleration loads developed during the impact. ~~Also considered in Appendix 3.AL is a calculation of t~~*T*he spring constant *is also calculated* based on an assumption that impact at the lower end of HI-TRAC first occurs at the pocket trunnion. The results ~~in Appendix 3.AL~~ demonstrate that this spring constant is lower and therefore would lead to a lower impact force. Therefore, the dynamic analysis of the handling accident is performed assuming initial impact with the flat rectangular short end of the transfer lid. Subsequent to the initial impact, the HI-TRAC

rotates in accordance with the dynamic equations of equilibrium and a secondary impact at the top of the transfer cask occurs. The impact is at the edge of the water jacket.

The following table summarizes the results from the dynamic analyses (using the Working Model 2D computer code)~~ documented in Appendix 3.Z~~:

HI-TRAC Handling Analysis – Working Model Analysis of Horizontal Drop			
Item	**Value**	**Allowable**	**Safety Factor**
HI-TRAC 125 – Primary Impact Deceleration (g's)	32.66	45	1.38
HI-TRAC 125 – Secondary Impact Deceleration (g's)	26.73	45	1.68
HI-TRAC 100 – Primary Impact Deceleration (g's)	33.18	45	1.36
HI-TRAC 100 – Secondary Impact Deceleration (g's)	27.04	45	1.66
Axial Membrane Stress Due to HI-TRAC 125 Bending as a Beam - Level D Drop (psi)	19.06	39.75	2.085
Axial Membrane Stress Due to HI-TRAC 100 Bending as a Beam - Level D Drop (psi)	15.77	39.75	2.52

In the table above, the decelerations are measured at points corresponding to the base and top of the fuel assemblies contained inside the MPC. The dynamic drop analysis reported above, using the Working Model 2D rigid body-spring model proved that decelerations are below the design basis value and that global stresses were within allowable limits.

3.4.9.2 DYNA3D Analysis of Drop Event

An independent evaluation of the drop event to delineate the effect of target non-linearity and the flexibility of the transfer cask has been performed using DYNA3D. ~~Appendix 3.AN provides details of the HI-TRAC drop model, the data input, and extensive graphical results.~~ Both the HI-TRAC 125 and HI-TRAC 100 transfer casks are modeled as part of the cask-pad-soil interaction finite element model set forth in NUREG/CR-6608 and validated by an NRC reviewed and approved Holtec topical report (see reference [3.A.4] in Appendix 3.A). The model uses the identical MPC and target pad/soil models employed in the accident analyses of the HI-STORM 100 overpack. The HI-TRAC inner and outer shells, the contained lead, the transfer lid, the water jacket metal structure, and the top lids are included in the model. The water jacket is assumed empty for conservatism.

Two side drop orientations are considered (see Figures 3.4.27 and 3.4.28). The first drop assumes that the plane of the lifting and rotation trunnions is horizontal with primary impact on the short side of the transfer lid. This maximizes the angle of slapdown, and represents a credible drop configuration where the HI-TRAC cask is dropped while being carried horizontally. The second

drop orientation assumes primary impact on the rotation trunnion and maximizes the potential for the lifting trunnion to participate in the secondary impact. This is a non-credible event that assumes complete separation from the transfer vehicle and a ninety-degree rotation prior to impact. Nevertheless, it is the only configuration where the trunnions could be involved in both primary and secondary impacts.

For each simulation performed, the lowest point on the HI-TRAC cask (either the transfer lid edge or the rotation trunnion) is set at 42" above the target interface. Decelerations are measured at the top lid, the cask centroidal position, and the transfer lid. Normal forces were measured at the primary impact interface, at the secondary impact interface, and at the top lid/MPC interface. Decelerations are filtered at 350 Hz.

The following key results summarize the analyses ~~documented in the new Appendix 3.AN~~:

ITEM	HI-TRAC 125		HI-TRAC 100		ALLOWABLE
Initial Orientation of Trunnions	**Horizontal**	**Vertical**	**Horizontal**	**Vertical**	
Max. Top Lid Vertical Deceleration – Secondary Impact (g's)	25.5	32	36.5	45†	45
Centroid Vertical Deceleration – at Time of Secondary Impact (g's)	9.0	13.0	10.0	17.5	45
Max. Transfer Lid Vertical Deceleration – Primary Impact (g's)	30.8	23.5	35.0	31.75	45
Maximum Normal Force at Primary Impact Site (kips)	1,950.	1,700	1,700	1,700	-
Maximum Normal Force at Secondary Impact Site (kips)	1,300.	1,850.	1,500.	1,450.	-
Maximum MPC/Top Lid Interface Force (kips)	132.	-	39.	-	-
Maximum Diametral Change of Inner Shell (inch)	0.228	0.113	Not Computed	0.067	0.3725
Maximum Von Mises Stress (ksi)	37.577	38.367	40.690	40.444	58.7*

† The deceleration at the top of the basket is estimated at 41 g's
* Allowable Level D Stress Intensity for Primary Plus Secondary Stress Intensity

The results ~~presented in Appendix 3.AN and~~ summarized above demonstrate that both the HI-TRAC 125 and HI-TRAC 100 transfer casks are sufficiently robust to perform their function during and after the postulated handling accidents. We also note that the results, using the Working Model single rigid body dynamic model (see Subsection 3.4.9.1), are in reasonable agreement with the results predicted by the DYNA3D multi-body finite element dynamic model although performed for a different drop height with deceleration measurements at different locations on the HI-TRAC.

The results reported above for maximum interface force at the top lid/MPC interface are used as input to *a separate* ~~the~~ analysis, *which* ~~in Appendix 3.AH to~~ demonstrate*s* that the top lid contains the MPC during and after a handling accident. The results reported above for the maximum normal force at the primary impact site (the transfer lid) have been used to calculate the maximum interface force at the bottom flange/transfer lid interface. This result is needed to insure that the interface ~~input~~ forces used ~~in Appendices 3.AD and 3.AJ~~ to evaluate transfer lid separation are indeed bounding. To obtain the interface force between the HI-TRAC transfer lid and the HI-TRAC bottom flange, it is sufficient to take a free-body of the transfer lid and write the dynamic force equilibrium equation for the lid. Figure 3.4.29 shows the free body with appropriate notation. The equation of equilibrium is:

$$M_{TL} a_{TL} = F_I - G_I$$

where

M_{TL} = the mass of the transfer lid
a_{TL} = the time varying acceleration of the centroid of the transfer lid
F_I = the time varying contact force at the interface with the target
G_I = the time varying interface force at the bottom flange/transfer lid interface

Solving for the interface force give the result

$$G_I = F_I - M_{TL} a_{TL}$$

Using the appropriate transfer lid mass and acceleration, together with the target interface force at the limiting time instant, provides values for the interface force. The table below provides the results of this calculation for the HI-TRAC 125 and HI-TRAC 100 transfer casks.

Item	Calculated from Equilibrium (kips)
HI-TRAC 125 – Trunnions Horizontal	1,183.
HI-TRAC 125 – Trunnions Vertical	1,272.
HI-TRAC 100 – Trunnions Horizontal	1,129.
HI-TRAC 100 – Trunnions Vertical	1,070.

3.4.9.3 Horizontal Drop of HI-TRAC 125D

The previous subsection addressed the 42" horizontal drop of the HI-TRAC 125 and HI-TRAC 100, including an evaluation of the bolted connection between the transfer lid, which sustains the primary impact, and the cylindrical body of the loaded HI-TRAC. The HI-TRAC 125D does not have a bolted connection between the bottom flange and the cylindrical body of the cask. However, the transverse protrusions (bottom flange, lifting trunnions, and optional attachment lugs/support tabs at the top of the cask) spawn different impact scenarios. The uncontrolled lowering of the cask is assumed to occur from a height of 42" measured to the lowest location on the HI-TRAC 125D in the horizontal orientation.

The maximum decelerations for the HI-TRAC 125D are comparable to the drop results for the HI-TRAC 125 when the plane of the lifting and rotation trunnions is vertical. Although the HI-TRAC 125D has no rotation trunnions, its bottom flange extends radially beyond the water jacket shell by approximately the same amount as the HI-TRAC 125 rotation trunnions and thereby establishes a similar "hard point" for primary impact in terms of distance from the cask centerline. More important, because the bottom flange is positioned closer to the base of the HI-TRAC 125D than the rotation trunnions are in the HI-TRAC 125, the slap-down angle for the HI-TRAC 125D is less. The shallower angle decreases the participation of the lifting trunnion during the secondary impact, and increases the participation of the water jacket shell. Since the water jacket shell is a more flexible structure than the lifting trunnion, the deceleration of the HI-TRAC 125D cask during secondary impact is slightly less than the calculated deceleration of the HI-TRAC 125. In the HI-TRAC 125D, there is no bolted connection at the bottom flange/cask body interface that is active in load transfer from the flange to the cask body. It is therefore concluded that this drop scenario for the HI-TRAC 125D is bounded by the similar evaluation for the HI-TRAC 125.

A second HI-TRAC 125D drop scenario with two attachment lugs/support tabs in a vertical plane is the most limiting scenario. The tab dimensions are such that primary impact occurs at the top end of the cask when the support tabs impact the target surface, followed by a slap-down and a secondary

impact at the bottom flange.

The evaluation of HI-TRAC 125D drop scenario is performed using the computer code Working Model *3D* (WM) (now known as Visual Nastran Desktop). First, the WM code is used to simulate the "Scenario A" drop of the HI-TRAC 125 in order to establish appropriate parameters to "benchmark" WM against the DYNA3D solution. The table below summarizes the results of the Working Model/DYNA3D benchmark comparison ~~(the DYNA3D solution for the HI-TRAC 125 (Scenario A) is documented in Appendix 3.AN)~~. Figure 3.4.48 shows the benchmark configuration after the drop event.

Comparison of HI-TRAC 125 Drop Results (Scenario A)		
	DYNA3D	Working Model
Vertical Deceleration of Top Lid (secondary impact) g's	32	33.49
Vertical Deceleration at Bottom Lid (primary impact on rotation trunnion) g's	23.5	23.59

The benchmarked Working Model simulation was then modified to simulate the second drop scenario of the HI-TRAC 125D with support tabs in a vertical plane; primary impact now occurred at the top end with secondary impact at the bottom flange. Figure 3.4.49 shows the configuration of the HI-TRAC 125D after this scenario. The impact parameters were unchanged from the benchmark model except for location. The acceleration results from the 42" horizontal drop of the HI-TRAC 125D in this second *drop scenario* are summarized below.

Results From HI-TRAC 125D 42" Drop	
Vertical Deceleration of Top Lid (primary impact on support tab) g's	36.75
Vertical Deceleration of Pool Lid (secondary impact on bottom flange) g's	29.27

The resulting g loads at the top of the active fuel region for the HI-TRAC 125D, with primary impact on the support tabs, are increased over the loads computed for the HI-TRAC 125 but remain well below the design basis limit.

3.4.10 HI-STORM 100 Non-Mechanistic Tip-over and Vertical Drop Event (Load Cases 02.a and 02.c in Table 3.1.5)

Pursuant to the provision in NUREG-1536, a non-mechanistic tip-over of a loaded HI-STORM 100 System on to the ISFSI pad is considered in this report. Analyses are also performed to determine the maximum deceleration sustained by a vertical free fall of a loaded HI-STORM 100 System from an 11" height onto the ISFSI pad. The objective of the analyses is to demonstrate that the plastic deformation in the fuel basket is sufficiently limited to permit the stored SNF to be retrieved by normal means, does not have a adverse effect on criticality safety, and that there is no significant loss of radiation shielding in the system.

Ready retrievability of the fuel is presumed to be ensured: if global stress levels in the MPC structure meet Level D stress limits during the postulated drop events; if any plastic deformations are localized; and if no significant permanent ovalization of the overpack into the MPC envelope space, remains after the event.

Subsequent to the accident events, the storage overpack must be shown to contain the shielding so that unacceptable radiation levels do not result from the accident.

Appendix 3.A provides a description of the dynamic finite element analyses undertaken to establish the decelerations resulting from the postulated event. A non-mechanistic tip-over is considered together with an end drop of a loaded HI-STORM 100 System. A dynamic finite element analysis of each event is performed using a commercial finite element code well suited for such dynamic analyses with interface impact and non-linear material behavior. This code and methodology have been fully benchmarked against Lawrence Livermore Laboratories test data and correlation [3.4.12].

The table below provides the values of computed peak decelerations at the top of the fuel basket for the vertical drop and the non-mechanistic tipover scenarios. It is seen that the peak deceleration is below 45 g's.

Filtered Results for Drop and Tip-Over Scenarios for HI-STORM

Drop Event	Max. Deceleration at the Top of the Basket (g's)	
	Set A(36" Thick Pad)	Set B(28" Thick Pad)
End Drop for 11 inches	43.98	41.53
Non-Mechanistic Tip-over	42.85	39.91

The tipover analysis performed in Appendix 3.A is based on the HI-STORM 100 geometry and a bounding weight. The fact that the HI-STORM 100S(232) is shorter and has a lower center of gravity suggests that the impact kinetic energy is reduced so that the target would absorb the energy with a lower maximum deceleration. However, since the actual weight of a HI-STORM 100S(232) is less than that of a HI-STORM 100 by a significant amount, the predicted maximum rigid body deceleration would tend to increase slightly. Since there are two competing mechanisms at work, it is not a foregone conclusion that the maximum rigid body deceleration level is, in fact, reduced if a HI-STORM 100S(232) suffers a non-mechanistic tipover onto the identical target as the HI-STORM 100. The situation is clearer for the HI-STORM 100S(243), which is virtually equal in weight to the HI-STORM 100, yet its center of gravity when loaded is almost one inch lower. In what follows, we present a summary of the analysis undertaken to demonstrate conclusively that the result for maximum deceleration level in the HI-STORM 100 tipover event does bound the corresponding value for the HI-STORM 100S(232), and, therefore, we need only perform a detailed dynamic finite element analysis for the HI-STORM 100.

Appendix 3.A presents a result for the angular velocity of the cylindrical body representing a HI-STORM 100 just prior to impact with the defined target. The result is expressed in Subsection 3.A.6 in terms of the cask geometry, and the ratio of the mass divided by the mass moment of inertia about the corner point that serves as the rotation origin. Since the mass moment of inertia is also linearly related to the mass, the angular velocity at the instant just prior to target contact is independent of the cask mass. Subsequent to target impact, we investigate post-impact response by considering the cask as a cylinder rotating into a target that provides a resistance force that varies linearly with distance from the rotation point. We measure "time" as starting at the instant of impact, and develop a one-degree-of freedom equation for the post-impact response (for the rotation angle into the target) as:

$$\ddot{\theta} + \omega^2\theta = 0$$

where

$$\omega^2 = \frac{kL^3}{3I_A}$$

The initial conditions at time=0 are: the initial angle is zero and the initial angular velocity is equal to the rigid body angular velocity acquired by the tipover from the center-of-gravity over corner position. In the above relation, L is the length of the overpack, I is the mass moment of inertia defined in Appendix 3.A, and k is a "spring constant"associated with the target resistance. If we solve for the maximum angular acceleration subsequent to time =0, we obtain the result in terms of the initial angular velocity as:

$$\ddot{\theta}_{max} = \omega\dot{\theta}_0$$

If we form the maximum linear acceleration at the top of the four-inch thick lid of the overpack, we can finally relate the decelerations of the HI-STORM 100 and the HI-STORM 100S(232) solely in terms of their geometry properties and their mass ratio. The value of "k", the target spring rate is the same for both overpacks so it does not appear in the relationship between the two decelerations. After substituting the appropriate geometry and calculated masses, we determine that the ratio of maximum rigid body decelerations at the top surface of the four-inch thick top lid plates is:

$$A_{\text{HI-STORM 100S(232)}}/A_{\text{HI-STORM 100}} = 0.946$$

Therefore, as postulated, there is no need to perform a separate DYNA3D analysis for the HI-STORM 100S hypothetical tipover.

~~Appendix 3.B contains a~~ *A* simple elastic strength of materials calculation *is performed* to demonstrate that the cylindrical storage overpack will not permanently deform to the extent that the MPC cannot be removed by normal means after a tip-over event. ~~It is demonstrated in that appendix~~ *The results demonstrate* that the maximum diametrical closure of the cylindrical cavity is less than the initial clearance between the overpack MPC support channels and the MPC canister. Primary

circumferential membrane stresses in the MPC shell remain in the elastic range during a tip-over (see Table 3.4.6 summary safety factors); therefore, no permanent global ovalization of the MPC shell occurs as a result of the drop.

To demonstrate that the shielding material will continue to perform its function after a tip-over accident, the stress and strain levels in the metal components of the storage overpack are examined at the end of the tip-over event. The results obtained in Appendix 3.A for impact decelerations conservatively assumed a rigid storage overpack model to concentrate nearly all energy loss in the target. However, to assess the state of stress and strain in the storage overpack after an accident causing a tip-over, the tip-over analysis was also performed using a non-rigid storage overpack model using overpack material properties listed in Appendix 3.A. Figure 3.4.13 shows the calculated von Mises stress in the top lid and outer shell at 0.08 seconds after the initiation of impact. Figure 3.4.14 shows the residual plastic strains in the same components. Figures 3.4.15 and 3.4.16 provide similar results for the inner shell, the radial plates, and the support channels[†]. The results show that while some plastic straining occurs, accompanied by stress levels above the yield stress of the material, there is no tearing in the metal structure which confines the radiation shielding (concrete). Therefore, there is no gross failure of the metal shells enclosing the concrete. The shielding concrete will remain inside the confines of the storage overpack and maintain its performance after the tipover event.

3.4.11 Storage Overpack and HI-TRAC Transfer Cask Service Life

The term of the 10CFR72, Subpart L C of C, granted by the NRC is 20 years; therefore, the License Life (please see glossary) of all components is 20 years. Nonetheless, the HI-STORM 100 and 100S Storage overpacks and the HI-TRAC transfer cask are engineered for 40 years of design life, while satisfying the conservative design requirements defined in Chapter 2, including the regulatory requirements of 10CFR72. In addition, the storage overpack and HI-TRAC are designed, fabricated, and inspected under the comprehensive Quality Assurance Program discussed in Chapter 13 and in accordance with the applicable requirements of the ACI and ASME Codes. This assures high design margins, high quality fabrication, and verification of compliance through rigorous inspection and testing, as describe in Chapter 9 and the design drawings in Section 1.5. Technical Specifications defined in Chapter 12 assure that the integrity of the cask and the contained MPC are maintained throughout the components' design life. The design life of a component, as defined in the Glossary, is the minimum duration for which the equipment or system is engineered to perform its intended function if operated and maintained in accordance with the FSAR. The design life is essentially the lower bound value of the service life, which is the expected functioning life of the component or system. Therefore, component longevity should be: licensed life < design life < service life. (The licensed life, enunciated by the USNRC, is the most pessimistic estimate of a component's life span.) For purposes of further discussion, we principally focus on the service life of the HI-STORM 100 System components that, as stated earlier, is the reasonable expectation of equipment's functioning life span.

---

† During fabrication the channels are attached to the inner shell by one of two methods, either the channels are welded directly to the inner shell or they are welded to a pair of L-shaped angles (i.e., channel mounts) that are pre-fastened to the inner shell. The results presented in Figures 3.4.16a and 3.4.16b bound the results from both methods of attachment.

The service life of the storage overpack and HI-TRAC transfer cask is further discussed in the following sections.

3.4.11.1 Storage Overpack

The principal design considerations that bear on the adequacy of the storage overpack for the service life are addressed as follows:

Exposure to Environmental Effects

In the following text, all references to HI-STORM 100 also apply to HI-STORM 100S. All exposed surfaces of HI-STORM 100 are made from ferritic steels that are readily painted. Concrete, which serves strictly as a shielding material, is completely encased in steel. Therefore, the potential of environmental vagaries such as spalling of concrete, are ruled out for HI-STORM 100. Under normal storage conditions, the bulk temperature of the HI-STORM 100 storage overpack will, because of its large thermal inertia, change very gradually with time. Therefore, material degradation from rapid thermal ramping conditions is not credible for the HI-STORM 100 storage overpack. Similarly, corrosion of structural steel embedded in the concrete structures due to salinity in the environment at coastal sites is not a concern for HI-STORM 100 because HI-STORM 100 does not rely on rebars (indeed, it contains no rebars). As discussed in Appendix 1.D, the aggregates, cement and water used in the storage cask concrete are carefully controlled to provide high durability and resistance to temperature effects. The configuration of the storage overpack assures resistance to freeze-thaw degradation. In addition, the storage overpack is specifically designed for a full range of enveloping design basis natural phenomena that could occur over the 40-year design life of the storage overpack as defined in Subsection 2.2.3 and evaluated in Chapter 11.

Material Degradation

The relatively low neutron flux to which the storage overpack is subjected cannot produce measurable degradation of the cask's material properties and impair its intended safety function. Exposed carbon steel components are coated to prevent corrosion. The controlled environment of the ISFSI storage pad mitigates damage due to direct exposure to corrosive chemicals that may be present in other industrial applications.

Maintenance and Inspection Provisions

The requirements for periodic inspection and maintenance of the storage overpack throughout the 40-year design life are defined in Chapter 9. These requirements include provisions for routine inspection of the storage overpack exterior and periodic visual verification that the ventilation flow paths of the storage overpack are free and clear of debris. ISFSIs located in areas subject to atmospheric conditions that may degrade the storage cask or canister should be evaluated by the licensee on a site-specific basis to determine the frequency for such inspections to assure long-term performance. In addition, the HI-STORM 100 System is designed for easy retrieval of the MPC from the storage overpack should it become necessary to perform more detailed inspections and repairs on the storage overpack.

The above findings are consistent with those of the NRC's Waste Confidence Decision Review [3.4.11], which concluded that dry storage systems designed, fabricated, inspected, and operate in accordance with such requirements are adequate for a 100-year service life while satisfying the requirements of 10CFR72.

3.4.11.2 Transfer Cask

The principal design considerations that bear on the adequacy of the HI-TRAC Transfer Cask for the service life are addressed as follows:

Exposure to Environmental Effects

All transfer cask materials that come in contact with the spent fuel pool are coated to facilitate decontamination. The HI-TRAC is designed for repeated normal condition handling operations with high factor of safety, particularly for the lifting trunnions, to assure structural integrity. The resulting cyclic loading produces stresses that are well below the endurance limit of the trunnion material, and therefore, will not lead to a fatigue failure in the transfer cask. All other off-normal or postulated accident conditions are infrequent or one-time occurrences that do not contribute significantly to fatigue. In addition, the transfer cask utilizes materials that are not susceptible to brittle fracture during the lowest temperature permitted for loading, as discussed in Chapter 12.

Material Degradation

All transfer cask materials that are susceptible to corrosion are coated. The controlled environment in which the HI-TRAC is used mitigates damage due to direct exposure to corrosive chemicals that may be present in other industrial applications. The infrequent use and relatively low neutron flux to which the HI-TRAC materials are subjected do not result in radiation embrittlement or degradation of the HI-TRAC's shielding materials that could impair the HI-TRAC's intended safety function. The HI-TRAC transfer cask materials are selected for durability and wear resistance for their deployment.

Maintenance and Inspection Provisions

The requirements for periodic inspection and maintenance of the HI-TRAC transfer cask throughout the 40-year design life are defined in Chapter 9. These requirements include provisions for routine inspection of the HI-TRAC transfer cask for damage prior to each use, including an annual inspection of the lifting trunnions. Precautions are taken during lid handling operations to protect the sealing surfaces of the pool lid. The leak tightness of the liquid neutron shield is verified periodically. The water jacket pressure relief valves and other fittings used can be easily removed.

3.4.12 MPC Service Life

The term of the 10CFR72, Subpart L C of C, granted by the NRC (i.e., licensed life) is 20 years. Nonetheless, the HI-STORM 100 MPC is designed for 40 years of design life, while satisfying the conservative design requirements defined in Chapter 2, including the regulatory requirements of 10CFR72. Additional assurance of the integrity of the MPC and the contained SNF assemblies throughout the 40-year life of the MPC is provided through the following:

- Design, fabrication, and inspection in accordance with the applicable requirements of the ASME Code as described in Chapter 2 assures high design margins.

- Fabrication and inspection performed in accordance with the comprehensive Quality Assurance program discussed in Chapter 13 assures competent compliance with the fabrication requirements.

- Use of materials with known characteristics, verified through rigorous inspection and testing, as described in Chapter 9, assures component compliance with design requirements.

- Use of welding procedures in full compliance with Section III of the ASME Code ensures high-quality weld joints.

Technical Specifications, as defined in Chapter 12, have been developed and imposed on the MPC that assure that the integrity of the MPC and the contained SNF assemblies are maintained throughout the 40-year design life of the MPC.

The principal design considerations bearing on the adequacy of the MPC for the service life are summarized below.

Corrosion

All MPC materials are fabricated from corrosion-resistant austenitic stainless steel and passivated aluminum. The corrosion-resistant characteristics of such materials for dry SNF storage canister applications, as well as the protection offered by these materials against other material degradation effects, are well established in the nuclear industry. The moisture in the MPC is removed to eliminate all oxidizing liquids and gases and the MPC cavity is backfilled with dry inert helium at the time of closure to maintain an atmosphere in the MPC that provides corrosion protection for the SNF cladding throughout the dry storage period. The preservation of this non-corrosive atmosphere is assured by the inherent seal worthiness of the MPC confinement boundary integrity (there are no gasketed joints in the MPC).

Structural Fatigue

The passive non-cyclic nature of dry storage conditions does not subject the MPC to conditions that might lead to structural fatigue failure. Ambient temperature and insolation cycling during normal dry storage conditions and the resulting fluctuations in MPC thermal gradients and internal pressure

is the only mechanism for fatigue. These low stress, high-cycle conditions cannot lead to a fatigue failure of the MPC that is made from stainless alloy stock (endurance limit well in excess of 20,000 psi). All other off-normal or postulated accident conditions are infrequent or one-time occurrences, which cannot produce fatigue failures. Finally, the MPC uses materials that are not susceptible to brittle fracture.

Maintenance of Helium Atmosphere

The inert helium atmosphere in the MPC provides a non-oxidizing environment for the SNF cladding to assure its integrity during long-term storage. The preservation of the helium atmosphere in the MPC is assured by the robust design of the MPC confinement boundary described in Section 7.1. Maintaining an inert environment in the MPC mitigates conditions that might otherwise lead to SNF cladding failures. The required mass quantity of helium backfilled into the canister at the time of closure, as defined in the Technical Specification contained in Subsection 12.3.3, and the associated leak tightness requirements for the canister defined in the Technical Specification contained in Chapter 12, are specifically set down to assure that an inert helium atmosphere is maintained in the canister throughout the 40-year design life.

Allowable Fuel Cladding Temperatures

The helium atmosphere in the MPC promotes heat removal and thus reduces SNF cladding temperatures during dry storage. In addition, the SNF decay heat will substantially attenuate over a 40-year dry storage period. Maintaining the fuel cladding temperatures below allowable levels during long-term dry storage mitigates the damage mechanism that might otherwise lead to SNF cladding failures. The allowable long-term SNF cladding temperatures used for thermal acceptance of the MPC design are conservatively determined, as discussed in Section 4.3.

Neutron Absorber Boron Depletion

The effectiveness of the fixed borated neutron absorbing material used in the MPC fuel basket design requires that sufficient concentrations of boron be present to assure criticality safety during worst case design basis conditions over the 40-year design life of the MPC. Information on the characteristics of the borated neutron absorbing material used in the MPC fuel basket is provided in Subsection 1.2.1.3.1. The relatively low neutron flux, which will continue to decay over time, to which this borated material is subjected, does not result in significant depletion of the material's available boron to perform its intended safety function. In addition, the boron content of the material used in the criticality safety analysis is conservatively based on the minimum specified boron areal density (rather than the nominal), which is further reduced by 25% for analysis purposes, as described in Section 6.1. Analysis discussed in Section 6.3.2 demonstrates that the boron depletion in the *neutron absorber material* ~~Boral~~ is negligible over a 50-year duration. Thus, sufficient levels of boron are present in the fuel basket neutron absorbing material to maintain criticality safety functions over the 40-year design life of the MPC.

The above findings are consistent with those of the NRC's Waste Confidence Decision Review, which concluded that dry storage systems designed, fabricated, inspected, and operated in the manner of the requirements set down in this document are adequate for a 100-year service life, while satisfying the requirements of 10CFR72.

3.4.13 Design and Service Life

The discussion in the preceding sections seeks to provide the logical underpinnings for setting the design life of the storage overpacks, the HI-TRAC transfer cask, and the MPCs as forty years. Design life, as stated earlier, is a lower bound value for the expected performance life of a component (service life). If operated and maintained in accordance with this Final Safety Analysis Report, Holtec International expects the service life of its HI-STORM 100 and HI-STORM 100S components to substantially exceed their design life values.

Table 3.4.1

FINITE ELEMENTS IN THE MPC STRUCTURAL MODELS

MPC Type	Model Type		
Element Type	Basic	0 Degree Drop	45 Degree Drop
MPC-24	1068	1114	1113
BEAM3	1028	1028	1028
PLANE82	0	0	0
CONTAC12	40	38	38
CONTAC26	0	45	45
COMBIN14	0	3	2
MPC-32	1374	1604	1603
BEAM3	1346	1346	1346
CONTAC12	28	27	24
CONTAC26	0	229	228
COMBIN14	0	2	5
MPC-68	1842	2066	2063
BEAM3	1782	1782	1782
PLANE82	16	16	16
CONTAC12	44	43	40
CONTAC26	0	223	222
COMBIN14	0	2	3
MPC-24E	1070	1124	1122
BEAM3	1030	1030	1030
PLANE82	0	0	0
CONTAC12	40	38	38
CONTAC26	0	53	52
COMBIN14	0	3	2

TABLE 3.4.2
HI-STORM 100 SYSTEM MATERIAL COMPATIBILITY WITH OPERATING ENVIRONMENTS

Material/Component	Fuel Pool (Borated and Unborated Water)†	ISFSI Pad (Open to Environment)
Alloy X: - MPC Fuel Basket - MPC Baseplate - MPC Shell - MPC Lid - MPC Fuel Spacers	Stainless steels have been extensively used in spent fuel storage pools with both borated and unborated water with no adverse reactions or interactions with spent fuel.	The MPC internal environment will be an inert (helium) atmosphere and the external surface will be exposed to ambient air. No adverse interactions identified.
Aluminum: - Heat Conduction Elements	Aluminum and stainless steel form a galvanic couple. However, aluminum will be used in a passivated state. Upon passivation, aluminum forms a thin ceramic (Al_2O_3) barrier. Therefore, during the short time they are exposed to pool water, significant corrosion of aluminum or production of hydrogen is not expected (see operational requirements under "*Neutron Absorber Material*~~Boral~~" below).	In a non-aqueous atmosphere, galvanic corrosion is not expected.
Neutron Absorber Material~~Boral~~: ~~Neutron Absorber~~	~~The Boral will be passivated before installation in the fuel basket to minimize the amount of hydrogen released from the aluminum-water reaction to a non-combustible concentration during MPC lid welding or cutting operations.~~ *Extensive in-pool experience on spent fuel racks with no adverse reactions.* See Chapter 8 for additional requirements for combustible gas monitoring and ~~recommended~~ *required* actions for control of combustible gas accumulation under the MPC lid.	No adverse potential reactions identified.

† HI-TRAC/MPC short-term operating environment during loading and unloading.

TABLE 3.4.2 (CONTINUED)
HI-STORM 100 SYSTEM MATERIAL COMPATIBILITY WITH OPERATING ENVIRONMENTS

Material/Component	Fuel Pool (Borated and Unborated Water)†	ISFSI Pad (Open to Environment)
Steels: - SA350-LF2 - SA350-LF3 - SA203-E - SA515 Grade 70 - SA516 Grade 70 - SA193 Grade B7 - SA106 (HI-TRAC)	All exposed steel surfaces (except seal areas, and pocket trunnions) will be coated with paint specifically selected for performance in the operating environments. Even without coating, no adverse reactions (other than nominal corrosion) have been identified. Lid bolts are plated and the threaded portion of the bolt anchor blocks is coated to seal the threaded area.	Internal surfaces of the HI-TRAC will be painted and maintained. Exposed external surfaces (except those listed in fuel pool column) will be painted and will be maintained with a fully painted surface. No adverse reactions identified.
Steels: - SA516 Grade 70 - SA203-E - SA350-LF3 Storage Overpack	HI-STORM 100 storage overpack is not exposed to fuel pool environment.	Internal and external surfaces will be painted (except for bolt locations that will have protective coating). External surfaces will be maintained with a fully painted surface. No adverse reaction identified.
Stainless Steels: - SA240 304 - SA193 Grade B8 - 18-8 S/S Miscellaneous Components	Stainless steels have been extensively used in spent fuel storage pools with both borated and unborated water with no adverse reactions.	Stainless steel has a long proven history of corrosion resistance when exposed to the atmosphere. These materials are used for bolts and threaded inserts. No adverse reactions with steel have been identified. No impact on performance.

† HI-TRAC/MPC short-term operating environment during loading and unloading.

TABLE 3.4.2 (CONTINUED)
HI-STORM 100 SYSTEM MATERIAL COMPATIBILITY
WITH OPERATING ENVIRONMENTS

Material/Component	Fuel Pool (Borated and Unborated Water)†	ISFSI Pad (Open to Environment)
Nickel Alloy: - SB637-NO7718 Lifting Trunnion	No adverse reactions with borated or unborated water.	Exposed to weathering effects. No adverse reactions with storage overpack closure plate. No impact on performance.
Brass/Bronze: - Pressure Relief Valve HI-TRAC	Small surface of pressure relief valve will be exposed. No significant adverse impact identified.	Exposed to external weathering. No loss of function expected.
Holtite-A: - Solid Neutron Shield	The neutron shield is fully enclosed. No adverse reaction identified. No adverse reactions with thermal expansion foam or steel.	The neutron shield is fully enclosed in the outer enclosure. No adverse reaction identified. No adverse reactions with thermal expansion foam or steel.

† HI-TRAC/MPC short-term operating environment during loading and unloading.

TABLE 3.4.2 (CONTINUED)
HI-STORM 100 SYSTEM MATERIAL COMPATIBILITY WITH OPERATING ENVIRONMENTS

Material/Component	Fuel Pool (Borated and Unborated Water)†	ISFSI Pad (Open to Environment)
Paint: - Carboline 890 - Thermaline 450	Carboline 890 used for all HI-STORM 100 surfaces and only HI-TRAC exterior surfaces. Acceptable performance for short-term exposure in mild borated pool water. Thermaline 450 selected for HI-TRAC internal surfaces for excellent high temperature resistance properties. Will only be exposed to demineralized water during in-pool operations as annulus is filled prior to placement in the spent fuel pool and the inflatable seal prevents fuel pool water in-leakage. No adverse interaction identified which could affect MPC/fuel assembly performance.	Good performance on surfaces. Discoloration is not a concern.
Elastomer Seals:	No adverse reactions identified.	Only used during fuel pool operations.
Lead:	Enclosed by carbon steel. Lead is not exposed to fuel pool water. Lead has no interaction with carbon steel.	Enclosed by carbon steel. Lead is not exposed to ambient environment. Lead has no interaction with carbon steel.
Concrete:	Storage overpack is not exposed to fuel pool water.	Concrete is enclosed by carbon steel and not exposed to ambient environment. Concrete has no interaction with carbon steel.

† HI-TRAC/MPC short-term operating environment during loading and unloading.

TABLE 3.4.3
FUEL BASKET RESULTS - MINIMUM SAFETY FACTORS

Load Case I.D.	Loading†	Safety Factor	Location in FSAR ~~Where the Analysis is Performed~~
F1	T, T'	No interference	*Subsection 3.4.4.2*~~3.I, 3.U, 3.W,3.AF~~
F2	D + H	2.79	3.AA of Docket 72-1008
F3			
F3.a	D + H' (end drop)	3.59	3.4.4.3.1.3
F3.b	D + H' (side drop 0 deg.)	1.32	Table 3.4.6
F3.c	D + H' (side drop 45 deg.)	1.28	Table 3.4.6

† The symbols used for the loadings are defined in Table 2.2.13.

TABLE 3.4.4
MPC RESULTS - MINIMUM SAFETY FACTOR

Load Case I.D.	Load Combination[†,††]	Safety Factor	Location in FSAR ~~Where the Analysis is Performed~~
E1			
E1.a	Design internal pressure, P_I	*8.59~~15~~* 1.326 *1.20~~1.36~~* N/A	E.1.a Lid *Table 3.4.7~~3.E.8.1.1 of Docket 72-1008~~* Baseplate 3.I.8.1 of Docket 72-1008 Shell Table 3.4.7 Supports
E1.b	Design external pressure, P_o	15 1.326 *38.5~~1.17~~*	E.1.b Lid P_i bounds Baseplate P_i bounds Shell *Buckling (methodology in 3.H of Docket 72-1008)~~3.H (Case 4) (buckling) of Docket 72-1008~~*
E1.c	Design internal pressure, P_i, plus Temperature T	N/A *1.09~~1.4~~*	Supports E1.c *Shell* Table 3.4.8
E2	D + H + (P_i, P_o)	6.5 1.088 2.64*0.967~~3~~(stress), *45.5~~1.17(buckling)~~* *5.85~~4.58~~*	Lid 3.E.8.1.2 of Docket 72-1008 Baseplate 3.I.8.2 of Docket 72-1008 Shell *Table 3.4.9~~3.AA (stress)~~* of Docket 72-1008 *Buckling (methodology in 3.H of Docket 72-1008)~~3.H (Case 4) (buckling) of Docket 72-1008~~* Supports *Table 3.4.9~~3.AA~~* of Docket 72-1008

Note: 0.967 multiplier reflects increase in MPC shell design temperature to 500 deg. F

† The symbols used for the loadings are defined in Table 2.2.13

†† Note that in analyses, bounding pressures are applied, i.e., in buckling calculations P_o is used, and in stress evaluations either P_o or P_i is appropriate

TABLE 3.4.4 (CONTINUED)
MPC RESULTS - MINIMUM SAFETY FACTOR

Load Case I.D.	Load Combination[†,††]	Safety Factor	Location in FSAR~~Where the Analysis is Performed~~
E3			
E3.a	(P_i,P_o) + D + H', end drop	2.8	E.a Lid 3.E.8.2.1-2 of Docket 72-1008
		1.28	Baseplate 3.I.8.3 of Docket 72-1008
		1.72~~21~~	Shell *Buckling (methodology in 3.H of Docket 72-1008*~~3.H (Case 5)~~
		N/A	~~(buckling)~~) ~~of Docket 72-1008~~
E3.b	(P_i,P_o) + D + H', side drop 0 deg.		Supports
		2.8	
		1.28	E.b Lid end drop bounds
		1.06~~1~~	Baseplate end drop bounds
		1.18	*Shell* Table 3.4.6
		~~1.82~~	*Supports* Table 3.4.6
E3.c	(P_i,P_o) + D + H', side drop 45 deg.		~~Basket Supports: Appendix 3.Y~~
		2.8	
		1.28	E.c. Lid end drop bounds
		1.41~~6~~	Baseplate end drop bounds
		1.56	*Shell* *Table 3.4.6*~~Calculation Package~~
			Supports Table 3.4.6

† The symbols used for the loadings are defined in Table 2.2.13

†† Note that in analyses, bounding pressures are applied, i.e., in buckling calculations P_o is used, and in stress evaluations either P_o or P_i is appropriate

TABLE 3.4.4 (CONTINUED)
MPC RESULTS - MINIMUM SAFETY FACTOR

Load Case I.D.	Load Combination†, ††	Safety Factor	Location in FSAR
E4	T	Subsection 3.4.4.2 shows there are no primary stresses from thermal expansion.	Subsection 3.4.4.2
E5	D + T* + (P_i*,P_o*)	27.2 1.78 1.*15*~~08~~ (buck*ling)*~~ling);~~ *13.6*~~4.16~~ (stress) N/A	Lid 3.E.8.2.1.3 of Docket 72-1008 Baseplate 3.I.8.4 of Docket 72-1008 Shell *Buckling (methodology in 3.H of Docket 72-1008)*~~3.H (Case 6) (buckling) of Docket 72-1008~~ 3.4.4.3.1.5 (thermal stress) of Docket 72-1008 Supports N/A

† The symbols used for the loadings are defined in Table 2.2.13.

†† Note that in analyses, bounding pressures are applied, i.e., in buckling calculations P_o is used, and in stress evaluations either P_o or P_i is appropriate.

TABLE 3.4.5
HI-STORM 100 STORAGE OVERPACK AND HI-TRAC RESULTS - MINIMUM SAFETY FACTORS

Load Case I.D.	Loading†	Safety Factor	Location in FSAR	
01	D + H + T + (P_o, P_i)		Overpack	
		1.33	Shell (inlet vent)/Base	*3.4.3.5*~~3.D~~
		N/A	Top Lid	N/A
			HI-TRAC	
		2.83(125); 2.29(100)	Shell	~~3.AB,~~ 3.4.3.3;
		2.604 (ASME Code limit)	*3.4.3.4*	
		2.61 (ASME Code limit)	Pool Lid	~~3.AB~~*3.4.3.8*
		2.91; 1.11(optional bolts)	Top Lid	~~3.AB~~*N/A*
			Pocket Trunnion	*3.4.4.3.3.1*~~3.AA;~~ ~~3.AI~~
02				
02.a	D + H' + (P_o,P_i) (end drop/tip-over)		Overpack	
		1.606	Shell	~~3.M;~~3.4.4.3.2.3
		1.134	Top Lid	3.4.4.3.2.2
02.b	D + H' + (P_o,P_i) (side drop)		HI-TRAC	
		2.09	Shell	~~3.Z;~~3.4.9
		1.392	Transfer Lid	~~3.AD;~~3.4.4.3.3.3
		1.651	Top Lid	~~3.AH;~~3.4.4.3.3.5
03	D (water jacket)	1.168	~~3.AG;~~ 3.4.4.3.3.4	
04	M (small and medium penetrant missiles)	2.65 (Side Strike); 1.35(End strike)	*Overpack*	*3.4.8.1*
		1.23 (End Strike)	*HI-TRAC*	*3.4.8.2.1*

† The symbols used for the loadings are defined in Table 2.2.13.

TABLE 3.4.6
MINIMUM SAFETY FACTORS FOR MPC COMPONENTS DURING TIP-OVER
45g DECELERATIONS

Component - Stress Result	MPC-24		MPC-68	
	0 Degrees	45 Degrees	0 Degrees	45 Degrees
Fuel Basket - Primary Membrane (P_m)	3.46 ((1134)	4.83 (396)	3.01 (1603)	4.36 (1603)]
Fuel Basket - Local Membrane Plus Primary Bending (P_L+P_b)	1.32 (1065)	1.33 (577)	2.18 (1590)	1.44 (774)
Enclosure Vessel - Primary Membrane (P_m)	6.54**.967* (1354)	6.62**.967* (1370)	6.56**.967* (2393)	6.86**.967* (2377)
Enclosure Vessel - Local Membrane Plus Primary Bending (P_L+P_b)	2.52**.967* (1278)	2.99**.967* (1247)	1.10**.967* (1925)	1.56**.967* (1925)
Basket Supports – Primary Membrane (P_m)	N/A	N/A	7.15 (1710)	9.37 (1699)
Basket Supports - Local Membrane Plus Primary Bending (P_L+P_b)	N/A	N/A	1.18 (1715)	1.56 (1704)

Notes:

1. Corresponding ANSYS element number shown in parentheses.
2. *Multiplier of 0.967 reflects increase in Enclosure Vessel Design Temperature from 450 deg. F to 500 deg. F in this Revision (Table 2.2.3).* ~~Deleted.~~

TABLE 3.4.6 (CONTINUED)
MINIMUM SAFETY FACTORS FOR MPC COMPONENTS DURING TIP-OVER
45g DECELERATIONS

Component - Stress Result	MPC-32	
	0 Degrees	45 Degrees
Fuel Basket - Primary Membrane (P_m)	3.51 (715)	4.96 (366)
Fuel Basket - Local Membrane Plus Primary Bending (P_L+P_b)	1.51 (390)	1.28 (19)
Enclosure Vessel - Primary Membrane (P_m)	4.11*.967 (1091)	5.59*.967 (1222)
Enclosure Vessel - Local Membrane Plus Primary Bending (P_L+P_b)	1.11*.967 (1031)	1.46*.967 (1288)
Basket Supports - Primary Membrane (P_m)	3.44 (905)	4.85 (905)
Basket Supports - Local Membrane Plus Primary Bending (P_L+P_b)	1.30 (901)	1.71 (908)

Notes:

1. Corresponding ANSYS element number shown in parentheses.
2. *Multiplier of 0.967 reflects increase in Enclosure Vessel Design Temperature from 450 deg. F to 500 deg. F in this Revision (Table 2.2.3).* ~~Deleted.~~

TABLE 3.4.6 (CONTINUED)
MINIMUM SAFETY FACTORS FOR MPC-24E COMPONENTS DURING TIP-OVER
45g DECELERATIONS

Components – Stress Result	0 Degrees	45 Degrees
Fuel Basket – Primary Membrane (P_m)	-10,050 (3.67)	-7,021 (5.26)
Fuel Basket – Primary Membrane plus Primary Bending ($P_L + P_b$)	31,912 (1.73)	30,436 (1.82)
Enclosure Vessel – Primary Membrane (P_m)	6,586 (6.59**.967*)	6,534 (6.65**.967*)
Enclosure Vessel – Primary Membrane plus Primary Bending ($P_L + P_b$)	23,100 (2.82**.967*)	17,124 (3.80**.967*)

Notes: 1. All stresses are reported in psi units and are based on closed gaps (primary stresses only).
2. ~~2.~~ The numbers shown in parentheses are the corresponding safety factors.
3. Multiplier of 0.967 reflects increase in Enclosure Vessel Design Temperature from 450 deg. F to 500 deg. F in this Revision (Table 2.2.3).

TABLE 3.4.7
STRESS INTENSITY RESULTS FOR CONFINEMENT BOUNDARY - INTERNAL PRESSURE ONLY

Locations (Per Fig. 3.4.11)	Calculated Value of Stress Intensity (psi)	Category	Table 3.1.13 Allowable Value (psi)†	Safety Factor (Allowable/Calculated)
Top Lid				
A	*1,633~~1641~~*	$P_L + P_b$	*25,450~~26,300~~*	*15.6~~16.0~~*
Neutral Axis	*21.9~~20.2~~*	P_m	*16,950~~17,500~~*	*774~~866.3~~*
B	*1,604~~1605~~*	$P_L + P_b$	*25,450~~26,300~~*	*15.9~~16.39~~*
C	*695~~687~~*	$P_L + P_b$	*25,450~~26,300~~*	*36.6~~38.3~~*
Neutral Axis	*732~~731~~*	P_m	*16,950~~17,500~~*	*23.2~~23.9~~*
D	*2,962~~2960~~*	$P_L + P_b$	*25,450~~26,300~~*	*8.59~~8.89~~*
Baseplate				
E	*19,773~~19,683~~*	$P_L + P_b$	*28,100~~30,000~~*	*1.42~~1.5~~*
Neutral Axis	*415~~412~~*	P_m	*18,700~~20,000~~*	*45.1~~48.5~~*
F	*20,601~~20,528~~*	$P_L + P_b$	*28,100~~30,000~~*	*1.36~~1.5~~*
G	*9,610~~9,695~~*	$P_L + P_b$	*28,100~~30,000~~*	*2.92~~3.1~~*
Neutral Axis	*2,268~~2,278~~*	P_m	*18,700~~20,000~~*	*8.25~~8.8~~*
H	*8,279~~8,340~~*	$P_L + P_b$	*28,100~~30,000~~*	*3.39~~3.5~~*

† Allowable stress intensit*ies~~y~~ are evaluated* at *550~~500~~* degrees F (*lid~~top~~*), ~~and~~ *400~~300~~* degrees F (*baseplate~~bottom~~*), *and 500 degrees F (canister).*

TABLE 3.4.7 (CONTINUED)
STRESS INTENSITY RESULTS FOR CONFINEMENT BOUNDARY - INTERNAL PRESSURE ONLY

Locations (Per Fig. 3.4.11)	Calculated Value of Stress Intensity (psi)	Category	Table 3.1.13 Allowable Value (psi)†	Safety Factor (Allowable/Calculated)
Canister				
I	*6,788~~6,860~~*	P_m	17,500	*2.58~~2.55~~*
Upper Bending Boundary Layer Region	*7,202~~7,189~~* *7,014~~7,044~~*	$P_L + P_b + Q$ P_L ~~+ P_b~~	52,500 26,300	*7.29~~7.30~~* *3.75~~3.73~~*
Lower Bending Boundary Layer Region	*43,645~~43,986~~* *11,349~~10,621~~*	$P_L + P_b + Q$ P_L ~~+ P_b~~	*52,500~~60,000~~* *26,300~~30,000~~*	*1.20~~1.36~~* *2.32~~2.82~~*

† Allowable stress intensitie~~s~~*y are evaluated* at *550~~500~~* degrees F (*lid~~top~~*), ~~and~~ *400~~300~~* degrees F (*baseplate~~bottom~~*), *and 500 degrees F (canister).*

TABLE 3.4.8
PRIMARY AND SECONDARY STRESS INTENSITY RESULTS FOR CONFINEMENT BOUNDARY - PRESSURE PLUS THERMAL LOADING

Locations (Per Fig. 3.4.11)	Calculated Value of Stress Intensity (psi)	Category	Allowable Stress Intensity (psi)†	Safety Factor (Allowable/Calculated)
Top Lid				
A	*7,866~~1,630~~*	$P_L + P_b + Q$	*50,850~~52,500~~*	*6.46~~32.2~~*
Neutral Axis	*6,553~~22.5~~*	$P_m + P_L$	*25,450~~26,300~~*	*3.88~~1,169.~~*
B	*3,409~~1,604.1~~*	$P_L + P_b + Q$	*50,850~~52,500~~*	*14.93~~2.7~~*
C	*13,646~~696~~*	$P_L + P_b + Q$	*50,850~~52,500~~*	*3.73~~75.5~~*
Neutral Axis	*12,182~~731~~*	$P_m + P_L$	*25,450~~26,300~~*	*2.09~~36.0~~*
D	*11,145~~2,960~~*	$P_L + P_b + Q$	*50,850~~52,500~~*	*4.56~~17.7~~*
Baseplate				
E	*19,417~~19,798~~*	$P_L + P_b + Q$	*56,100~~60,000~~*	*2.89~~3.0~~*
Neutral Axis	*223.1~~410.0~~*	$P_m + P_L$	*28,100~~30,000~~*	*12~~673.2~~*
F	*19,860~~20,622~~*	$P_L + P_b + Q$	*56,100~~60,000~~*	*2.82~~2.9~~*
G	*4,836~~4,789.4~~*	$P_m + P_L + Q$	*56,100~~60,000~~*	*11.6~~12.5~~*
Neutral Axis	*1,201~~1,131.8~~*	$P_m + P_L$	*28,100~~30,000~~*	*23.4~~26.5~~*
H	*4,473~~4,139.4~~*	$P_L + P_b + Q$	*56,100~~60,000~~*	*12.5~~14.5~~*

† *Allowable stress intensities are evaluated at 550 degrees F (lid), 400 degrees F (baseplate), and 500 degrees F (canister).*

TABLE 3.4.8 (CONTINUED)
PRIMARY AND SECONDARY STRESS INTENSITY RESULTS FOR CONFINEMENT BOUNDARY - PRESSURE PLUS THERMAL LOADING

Locations (Per Fig. 3.4.11)	Calculated Value of Stress Intensity (psi)	Category	Allowable Stress Intensity (psi)[†]	Safety Factor (Allowable/Calculated)
Canister				
I	*6,799~~6,787.4~~*	~~$P_m + P_L$~~	*26,300~~30,000~~*	*3.87~~4.4~~*
Upper Bending Boundary Layer Region	*12,813~~4,200.5~~* *12,185~~1,729.3~~*	$P_L + P_b + Q$ ~~$P_m + P_L$~~	52,500 26,300	*4.10~~12.5~~* *2.16~~15.2~~*
Lower Bending Boundary Layer Region	*48,378~~43,484~~* *12,028~~10,498~~*	$P_L + P_b + Q$ ~~$P_m + P_L$~~	*52,500~~60,000~~* *26,300~~30,000~~*	*1.09~~1.4~~* *2.19~~2.9~~*

[†] *Allowable stress intensities are evaluated at 550 degrees F (lid), 400 degrees F (baseplate), and 500 degrees F (canister).*

TABLE 3.4.9
SAFETY FACTORS FROM SUPPLEMENTARY CALCULATIONS

Item	Loading	Safety Factor	FSAR Location Where Details are Provided
HI-STORM Top Lid Weld Shear	Tipover	3.22	*3.4.4.3.2.~~23.K~~*
HI-STORM Lid Bottom Plate	End Drop	9.908	*3.4.4.3.2.~~33.M~~;* ~~3.X~~
HI-STORM Lid Bottom Plate Welds	End Drop	2.695	*3.4.4.3.2.~~33.M~~*
Pedestal Shield Compression	End Drop	1.011	*3.4.4.3.2.~~33.M~~*
HI-STORM Inlet Vent Plate Bending Stress	End Drop	1.606	*3.4.4.3.2.~~33.M~~*
HI-STORM Lid Top Plate Bending	End Drop –100 100S	5.29 1.625	*3.4.4.3.2.~~33.M~~*
HI-TRAC Pocket Trunnion Weld	HI-TRAC Rotation	2.92	*3.4.4.3.3.~~13.AA~~*
HI-TRAC 100 Optional Bolts - Tension	HI-TRAC Rotation	1.11	*3.4.4.3.3.~~13.AI~~*
HI-STORM 100 Shell	Seismic Event	18.6	3.4.7
HI-TRAC Transfer Lid Door Lock Bolts	Side Drop	2.387	*3.4.4.3.3.~~33.AD~~*
HI-TRAC Transfer Lid Separation	Side Drop	1.329	*3.4.4.3.3.~~33.AD~~*
HI-STORM 100 Top Lid	Missile Impact	*1.29~~1.35~~*	*3.4.8.~~13.G~~*
HI-STORM 100 Shell	Missile Impact	2.77	*3.4.8.~~13.G~~*
HI-TRAC Water Jacket –Enclosure Shell Bending	Pressure	1.17	*3.4.4.3.3.~~43.AG~~*
HI-TRAC Water Jacket – Enclosure Shell Bending	Pressure plus Handling	1.14	~~Subsection~~ 3.4.4.3.3.1
HI-TRAC Water Jacket – Bottom Flange Bending	Pressure	1.39	3.4.4.3.3.4
HI-TRAC Water Jacket – Weld	Pressure	1.42	*3.4.4.3.3.~~43.AG~~*
Fuel Basket Support Plate Bending	Side Drop	1.91	*3.4.4.3.1.~~83.Y~~*
Fuel Basket Support Welds	Side Drop	2.09	*3.4.4.3.1.~~83.Y~~*
MPC Cover Plates in MPC Lid	Accident Condition Internal Pressure	1.3~~49~~	*3.4.4.3.1.~~83.Y~~*
MPC Cover Plate Weld	Accident Condition Internal Pressure	*5.846.04*	*3.4.4.3.1.~~83.Y~~*
HI-STORM Storage Overpack	External Pressure	2.88	*3.4.4.5.~~23.AK~~*
HI-STORM Storage Overpack Circumferential Stress	Missile Strike	2.49	3.4.8.1~~; 3.B~~
HI-TRAC Transfer Cask Circumferential Stress	Missile Strike	2.61	3.4.8.2~~; 3.AM~~
HI-TRAC Transfer Cask Axial Membrane Stress	Side Drop	2.09	~~3.Z;~~ 3.4.9.1

TABLE 3.4.10
INPUT DATA FOR SEISMIC ANALYSIS OF ANCHORED HI-STORM 100 SYSTEM

Item	Data Used		Actual Value and Reference
Cask height, inch	231.25		231.25" (Dwg. 1495)
Contact diameter at ISFSI pad, inch	146.5		146.5 (Dwg. 3187)
Overpack empty, wt. Kips	270		267.87 (Table 3.2.1)
Bounding wt. of loaded MPC, kips	90		88.135 (Table 3.2.1)
Overpack-to-MPC radial gap (inch)	2.0		2.0' (Dwg. 1495, Sheets 2 and 5)
Overpack C.G. height above ISFSI pad, inch	117.0		116.8 (Table 3.2.3)
Overpack with Loaded MPC - C.G. height above ISFSI pad	118.5		118.5 (Table 3.2.3)
Applicable Response Spectra	Fig. 3.4-31 to 3.4-36		Figures 3.4-30
ZPA:	RG 1.60	Western Plant	
Horizontal 1	1.5	1.45	
Horizontal 2	1.5	1.45	Site-Specific
Vertical	1.5	1.3	
No. of Anchor Studs	28		Up to 28
Anchor Stud Diameter			
Inch	2.0		2.0 (BOM 3189)
Yield stress, ksi	80 (minimum)		Table 1.2.7
Ultimate stress, ksi	125 (minimum)		Table 1.2.7
Free length, inch*	16-42		Site-specific
Pre-load tensile stress, ksi*	55-65		55-65

*For the confirmatory dynamic analyses, bolt spring rates were computed using the maximum length, and the preload stress was slightly above 60.1 ksi. For the static analysis, all combinations were evaluated.

3.6 SUPPLEMENTAL DATA

3.6.1 Additional Codes and Standards Referenced in HI-STORM 100 System Design and Fabrication

The following additional codes, standards and practices were used as aids in developing the design, manufacturing, quality control and testing methods for HI-STORM 100 System:

a. Design Codes

(1) AISC Manual of Steel Construction, 1964 Edition and later.

(2) ANSI N210-1976, "Design Requirements for Light Water Reactor Spent Fuel Storage Facilities at Nuclear Power Stations".

(3) American Concrete Institute Building Code Requirements for Structural Concrete, ACI-318-95.

(4) Code Requirements for Nuclear Safety Related Concrete Structures, ACI349-85/ACI349R-85, and ACI349.1R-80.

(5) ASME NQA-1, Quality Assurance Program Requirements for Nuclear Facilities.

(6) ASME NQA-2-1989, Quality Assurance Requirements for Nuclear Facility Applications.

(7) ANSI Y14.5M, Dimensioning and Tolerancing for Engineering Drawings and Related Documentation Practices.

(8) ACI Detailing Manual - 1980.

(9) Crane Manufacturer's Association of America, Inc., CMAA Specification #70, Specifications for Electric Overhead Traveling Cranes, Revised 1988.

b. Material Codes - Standards of ASTM

(1) E165 - Standard Methods for Liquid Penetrant Inspection.

(2) A240 - Standard Specification for Heat-Resisting Chromium and Chromium-Nickel Stainless Steel Plate, Sheet and Strip for Fusion-Welded Unfired Pressure Vessels.

(3) A262 - Detecting Susceptibility to Intergranular Attack in Austenitic Stainless Steel.

(4) A276 - Standard Specification for Stainless and Heat-Resisting Steel Bars and Shapes.

(5) A479 - Steel Bars for Boilers & Pressure Vessels.

(6) ASTM A564, Standard Specification for Hot-Rolled and Cold-Finished Age-Hardening Stainless and Heat-Resisting Steel Bars and Shapes.

(7) C750 - Standard Specification for Nuclear-Grade Boron Carbide Powder.

(8) A380 - Recommended Practice for Descaling, Cleaning and Marking Stainless Steel Parts and Equipment.

(9) C992 - Standard Specification for Boron-Based Neutron Absorbing Material Systems for Use in Nuclear Spent Fuel Storage Racks.

(10) ASTM E3, Preparation of Metallographic Specimens.

(11) ASTM E190, Guided Bend Test for Ductility of Welds.

(12) NCA3800 - Metallic Material Manufacturer's and Material Supplier's Quality System Program.

c. Welding Codes: ASME Boiler and Pressure Vessel Code, Section IX - Welding and Brazing Qualifications, 1995 Edition.

d. Quality Assurance, Cleanliness, Packaging, Shipping, Receiving, Storage, and Handling Requirements

(1) ANSI 45.2.1 - Cleaning of Fluid Systems and Associated Components during Construction Phase of Nuclear Power Plants.

(2) ANSI N45.2.2 - Packaging, Shipping, Receiving, Storage and Handling of Items for Nuclear Power Plants (During the Construction Phase).

(3) ANSI - N45.2.6 - Qualifications of Inspection, Examination, and Testing Personnel for Nuclear Power Plants (Regulatory Guide 1.58).

(4) ANSI-N45.2.8, Supplementary Quality Assurance Requirements for Installation, Inspection and Testing of Mechanical Equipment and Systems for the Construction Phase of Nuclear Power Plants.

(5) ANSI - N45.2.11, Quality Assurance Requirements for the Design of Nuclear Power Plants.

(6) ANSI-N45.2.12, Requirements for Auditing of Quality Assurance Programs for Nuclear Power Plants.

(7) ANSI N45.2.13 - Quality Assurance Requirements for Control of Procurement of Equipment Materials and Services for Nuclear Power Plants (Regulatory Guide 1.123).

(8) ANSI N45.2.15-18 - Hoisting, Rigging, and Transporting of Items for Nuclear Power Plants.

(9) ANSI N45.2.23 - Qualification of Quality Assurance Program Audit Personnel for Nuclear Power Plants (Regulatory Guide 1.146).

(10) ASME Boiler and Pressure Vessel, Section V, Nondestructive Examination, 19955 Edition.

(11) ANSI - N16.9-75 Validation of Calculation Methods for Nuclear Criticality Safety.

e. Reference NRC Design Documents

(1) NUREG-0800, Radiological Consequences of Fuel Handling Accidents.

(2) NUREG-0612, "Control of Heavy Loads at Nuclear Power Plants", USNRC, Washington, D.C., July, 1980.

(3) NUREG-1536, "Standard Review Plan for Dry Cask Storage Systems", USNRC, January 1997, Final Report.

f. Other ANSI Standards (not listed in the preceding)

(1) ANSI/ANS 8.1 (N16.1) - Nuclear Criticality Safety in Operations with Fissionable Materials Outside Reactors.

(2) ANSI/ANS 8.17, Criticality Safety Criteria for the Handling, Storage, and Transportation of LWR Fuel Outside Reactors.

(3) N45.2 - Quality Assurance Program Requirements for Nuclear Facilities - 1971.

(4) N45.2.9 - Requirements for Collection, Storage and Maintenance of Quality Assurance Records for Nuclear Power Plants - 1974.

(5) N45.2.10 - Quality Assurance Terms and Definitions - 1973.

(6) ANSI/ANS 57.2 (N210) - Design Requirements for Light Water Reactor Spent Fuel Storage Facilities at Nuclear Power Plants.

(7) N14.6 (1993) - American National Standard for Special Lifting Devices for Shipping Containers Weighing 10,000 pounds (4500 kg) or more for Nuclear Materials.

(8) ANSI/ASME N626-3, Qualification and Duties of Personnel Engaged in ASME Boiler and Pressure Vessel Code Section III, Div. 1, Certifying Activities.

g. Code of Federal Regulations

(1) 10CFR20 - Standards for Protection Against Radiation.

(2) 10CFR21 - Reporting of Defects and Non-compliance.

(3) 10CFR50 - Appendix A - General Design Criteria for Nuclear Power Plants.

(4) 10CFR50 - Appendix B - Quality Assurance Criteria for Nuclear Power Plants and Fuel Reprocessing Plants.

(5) 10CFR61 - Licensing Requirements for Land Disposal of Radioactive Material.

(6) 10CFR71 - Packaging and Transportation of Radioactive Material.

h. Regulatory Guides

(1) RG 1.13 - Spent Fuel Storage Facility Design Basis (Revision 2 Proposed).

(2) RG 1.25 - Assumptions Used for Evaluating the Potential Radiological Consequences of a Fuel Handling Accident in the Fuel Handling and Storage Facility of Boiling and Pressurized Water Reactors.

(3) RG 1.28 - (ANSI N45.2) - Quality Assurance Program Requirements.

(4) RG 1.29 - Seismic Design Classification (Rev. 3).

(5) RG 1.31 - Control of Ferrite Content in Stainless Steel Weld Material.

(6) RG 1.38 - (ANSI N45.2.2) Quality Assurance Requirements for Packaging, Shipping, Receiving, Storage and Handling of Items for Water-Cooled Nuclear Power Plants.

(7) RG 1.44 - Control of the Use of Sensitized Stainless Steel.

(8) RG 1.58 - (ANSI N45.2.6) Qualification of Nuclear Power Plant Inspection, Examination, and Testing Personnel.

(9) RG 1.61 - Damping Values for Seismic Design of Nuclear Power Plants, Rev. 0, 1973.

(10) RG 1.64 - (ANSI N45.2.11) Quality Assurance Requirements for the Design of Nuclear Power Plants.

(11) RG 1.71 - Welder Qualifications for Areas of Limited Accessibility.

(12) RG 1.74 - (ANSI N45.2.10) Quality Assurance Terms and Definitions.

(13) RG 1.85 - Materials Code Case Acceptability - ASME Section 3, Div. 1.

(14) RG 1.88 - (ANSI N45.2.9) Collection, Storage and Maintenance of Nuclear Power Plant Quality Assurance Records.

(15) RG 1.92 - Combining Modal Responses and Spatial Components in Seismic Response Analysis.

(16) RG 1.122 - Development of Floor Design Response Spectra for Seismic Design of Floor-Supported Equipment or Components.

(17) RG 1.123 - (ANSI N45.2.13) Quality Assurance Requirements for Control of Procurement of Items and Services for Nuclear Power Plants.

(18) RG 1.124 - Service Limits and Loading Combinations for Class 1 Linear-Type Component Supports, Revision 1, 1978.

(19) Reg. Guide 3.4 - Nuclear Criticality Safety in Operations with Fissionable Materials at Fuels and Materials Facilities.

(20) RG 3.41 - Validation of Calculational Methods for Nuclear Criticality Safety, Revision 1, 1977.

(21) Reg. Guide 8.8 - Information Relative to Ensuring that Occupational Radiation Exposure at Nuclear Power Plants will be as Low as Reasonably Achievable (ALARA).

(22) DG-8006, "Control of Access to High and Very High Radiation Areas in Nuclear Power Plants".

i. Branch Technical Position

(1) CPB 9.1-1 - Criticality in Fuel Storage Facilities.

(2) ASB 9-2 - Residual Decay Energy for Light-Water Reactors for Long-Term Cooling.

j. Standard Review Plan (NUREG-0800)

(1) SRP 3.2.1 - Seismic Classification.

(2) SRP 3.2.2 - System Quality Group Classification.

(3) SRP 3.7.1 - Seismic Design Parameters.

(4) SRP 3.7.2 - Seismic System Analysis.

(5) SRP 3.7.3 - Seismic Subsystem Analysis.

(6) SRP 3.8.4 - Other Seismic Category I Structures (including Appendix D), Technical Position on Spent Fuel Rack.

(7) SRP 3.8.5 - Foundations

(8) SRP 9.1.2 - Spent Fuel Storage, Revision 3, 1981.

(9) SRP 9.1.3 - Spent Fuel Pool Cooling and Cleanup System.

(10) SRP 9.1.4 - Light Load Handling System.

(11) SRP 9.1.5 - Overhead Heavy Load Handling System.

(12) SRP 15.7.4 - Radiological Consequences of Fuel Handling Accidents.

k. AWS Standards

(1) AWS D1.1 - Structural Welding Code, Steel.

(2) AWS A2.4 - Standard Symbols for Welding, Brazing and Nondestructive Examination.

(3) AWS A3.0 - Standard Welding Terms and Definitions.

(4) AWS A5.12 - Tungsten Arc-welding Electrodes.

(5) AWS QC1 - Standards and Guide for Qualification and Certification of Welding Inspectors.

l. Others

(1) ASNT-TC-1A - Recommended Practice for Nondestructive Personnel Qualification and Certification.

(2) SSPC SP-2 - Surface Preparation Specification No. 2 Hand Tool Cleaning.

(3) SSPC SP-3 - Surface Preparation Specification No. 3 Power Tool Cleaning.

(4) SSPC SP-10 - Near-White Blast Cleaning.

3.6.2 Computer Programs

Three computer programs, all with a well established history of usage in the nuclear industry, have been utilized to perform structural and mechanical analyses documented in this report. These codes are ANSYS, DYNA3D, and WORKING MODEL. ANSYS is a public domain code which utilizes the finite element method for structural analyses.

WORKING MODEL, Version V.3.0/V.4.0

This code is used in this 10CFR72 submittal to compute the dynamic load resulting from intermediate missile impact on the overpack closure ~~in Appendix 3.G~~ and to evaluate the maximum elastic spring rate associated with the target during a HI-TRAC handling accident event.

WORKING MODEL has been previously utilized in similar dynamic analyses of the HI-STAR 100 system (Docket No. 72-1008).

"WORKING MODEL" (V3.0/V4.0) is a Computer Aided Engineering (CAE) tool with an integrated user interface that merges modeling, simulation, viewing, and measuring. The program includes a dynamics algorithm that provides automatic collision and contact handling, including detection, response, restitution, and friction.

Numerical integration is performed using the Kutta-Merson integrator which offers options for variable or fixed time-step and error bounding.

The Working Model Code is commercially available. Holtec has performed independent QA validation of the code (in accordance with Holtec's QA requirements) by comparing the solution of several classical dynamics problems with the numerical results predicted by Working Model. Agreement in all cases is excellent.

Additional theoretical material is available in the manual: "Users Manual, Working Model, Version 3", Knowledge Revolution, 66 Bovet Road, Suite 200, San Mateo, CA, 94402.

DYNA3D

"DYNA3D" is a nonlinear, explicit, three-dimensional finite element code for solid and structural mechanics. It was originally developed at Lawrence Livermore Laboratories and is ideally suited for study of short-time duration, highly nonlinear impact problems in solid mechanics. DYNA3D is commercially available for both UNIX work stations and Pentium class PCs running Windows 95 or Windows NT. The PC version has been fully validated at Holtec following Holtec's QA procedures for commercial computer codes. This code is used to analyze the drop accidents and the tip-over scenario for the HI-STORM 100. Benchmarking of DYNA3D for these storage analyses is discussed and documented in Appendix 3.A.

3.6.3 ~~Appendices~~*Appendix* Included in Chapter 3

3.A HI-STORM Deceleration Under Postulated Vertical Drop Event and Tipover
~~3.B HI-STORM 100 Overpack Deformation in Non-Mechanistic Tipover Event~~
~~3.C Response of Cask to Tornado Wind Load and Large Missile Impact~~
~~3.D Vertical Handling of Overpack with Heaviest MPC~~
~~3.E Lifting Trunnion Stress Analysis for HI-TRAC~~
~~3.F Lead Slump Analysis (HI-TRAC Side Drop)~~
~~3.G Missile Penetration Analysis for HI-STORM 100~~
~~3.H Missile Penetration Analysis for HI-TRAC~~
~~3.I HI-TRAC Free Thermal Expansions~~
~~3.J Deleted~~
~~3.K HI-STORM Tipover Lid Analysis~~
~~3.L HI-STORM Lid Top Plate Bolting~~
~~3.M Vertical Drop of Overpack~~
~~3.N Deleted.~~
~~3.O Deleted.~~
~~3.P Deleted.~~
~~3.Q Deleted.~~
~~3.R Deleted.~~
~~3.S Deleted.~~
~~3.T Deleted.~~

~~3.U HI-STORM 100 Component Thermal Expansions – MPC-24~~
~~3.V HI-STORM 100 Component Thermal Expansions – MPC-32~~
~~3.W HI-STORM 100 Component Thermal Expansions – MPC-68~~
~~3.X Calculation of Dynamic Load Factors~~
~~3.Y Miscellaneous Calculations~~
~~3.Z HI-TRAC Horizontal Drop Analysis~~
~~3.AA HI-TRAC 125 – Rotation Trunnion Weld Analysis~~
~~3.AB HI-TRAC Pool Lid Stress and Closure Analysis~~
~~3.AC Lifting Calculations~~
~~3.AD 125-Ton HI-TRAC Transfer Lid Stress Analysis~~
~~3.AE Global Analysis of HI-TRAC Lift~~
~~3.AF MPC Transfer from HI-TRAC to HI-STORM 100 Under Cold Conditions of Storage~~
~~3.AG Stress Analysis of the HI-TRAC Water Jacket~~
~~3.AH HI-TRAC Top Lid Separation Analyses~~
~~3.AI HI-TRAC 100 – Rotation Trunnion Weld Analysis~~
~~3.AJ 100-Ton HI-TRAC Transfer Lid Stress Analysis~~
~~3.AK Code Case N-284 Stability Calculations~~
~~3.AL HI-TRAC Lumped Parameters for Side Drop Analysis~~
~~3.AM HI-TRAC 100 Transfer Cask Circumferential Deformation and Stress~~
~~3.AN DYNA3D Analyses of HI-TRAC Side Drops and Impact by a Large Tornado Missile~~
~~3.AO Not used.~~
~~3.AP Not used.~~
~~3.AQ HI-STORM 100 Component Thermal Expansions – MPC-24E~~
~~3.AR Analysis of Transnuclear Damaged Fuel Canister and Thoria Rod Canister~~
~~3.AS Analysis of Generic PWR and BWR Damaged Fuel Containers~~

3.6.4 Calculation Packages

In addition to the calculations presented in Chapter 3 ~~and the Appendices~~, supporting calculation packages have been prepared to document other information pertinent to the analyses.

The calculation packages contain additional details on component weights, supporting calculations for some results summarized in the chapter, and miscellaneous supporting data that supplements the results summarized in Chapter 3 of the FSAR. All of the finite element tabular data, node and element data, supporting figures, and numerical output for all fuel baskets are contained in the calculation package supplement supporting Revision 1 of the FSAR.

3.7 COMPLIANCE WITH NUREG-1536

Supporting information to provide reasonable assurance with respect to the adequacy of the HI-STORM 100 System to store spent nuclear fuel in accordance with the stipulations of the Technical Specifications (Chapter 12) is provided throughout this Topical Safety Analysis Report. An itemized table (Table 3.0.1 at the beginning of this chapter) has been provided to locate and collate the substantiating material to support the technical evaluation findings listed in NUREG-1536 Chapter 3, Article VI.

The following statements are germane to an affirmative safety evaluation:

- The design and structural analysis of the HI-STORM 100 System is in full compliance with the provisions of Chapter 3 of NUREG-1536 except as listed in the Table 1.0.3 (list of code compliance exceptions).

- The list of Regulatory Guides, Codes, and standards presented in Section 3.6 herein is in full compliance with the provisions of NUREG-1536.

- All HI-STORM 100 structures, systems, and components (SSC) that are important to safety (ITS) are identified in Table 2.2.6. Section 1.5 contains the design drawings that describe the HI-STORM 100 SSCs in complete detail. Explanatory narrations in Subsections 3.4.3 *and*~~,~~ 3.4.4 ~~, and Chapter 3 appendices~~ provide sufficient textual details to allow an independent evaluation of their structural effectiveness.

- The requirements of 10CFR72.24 with regard to information pertinent to structural evaluation is provided in Chapters 2, 3, and 11.

- Technical Specifications pertaining to the structures of the HI-STORM 100 System have been provided in Section 12.3 herein pursuant to the requirements of 10CFR72.26.

- A series of analyses to demonstrate compliance with the requirements of 10CFR72.122(b) and (c), and 10CFR72.24(c)(3) have been performed which show that SSCs designated as ITS possess an adequate margin of safety with respect to all load combinations applicable to normal, off-normal, accident, and natural phenomenon events. In particular, the following information is provided:

  i. Load combinations for the fuel basket, enclosure vessel, and the HI-STORM 100/HI-TRAC overpacks for normal, off-normal, accident, and natural phenomenon events are compiled in Tables 2.2.14, 3.1.1, and 3.1.3 through 3.1.5, respectively.

ii. Stress limits applicable to the materials are found in Subsection 3.3.

iii. Stresses at various locations in the fuel basket, the enclosure vessel, and the HI-STORM 100/HI-TRAC overpacks have been computed by analysis.

Descriptions of stress analyses are presented in Sections 3.4.3 and 3.4.4~~, which are further elaborated in a series of appendices listed at the end of this chapter~~.

iv. Factors of safety in the components of the HI-STORM 100 System are reported as below:

a.	Fuel basket	Tables 3.4.3 and 3.4.6
b.	Enclosure vessel	Tables 3.4.4, 3.4.6, 3.4.7, and 3.4.8
c.	HI-STORM 100 overpack/ HI-TRAC	Table 3.4.5
d.	Miscellaneous components	Table 3.4.9
e.	Lifting devices	Subsection 3.4.3

- The structural design and fabrication details of the fuel baskets whose safety function in the HI-STORM 100 System is to maintain nuclear criticality safety, have been carried out to comply with the provisions of Subsection NG of the ASME Code (loc. cit.) Section III. The structural factors of safety, summarized in Tables 3.4.3 and 3.4.6 for all credible load combinations under normal, off-normal, accident, and natural phenomenon events demonstrate that the Code limits are satisfied in all cases. As the stress analyses have been performed using linear elastic methods and the computed stresses are well within the respective ASME Code limits, it follows that the physical geometry of the fuel basket will not be altered under any load combination to create a condition adverse to criticality safety. This conclusion satisfies the requirement of 10CFR72.124(a), with respect to structural margins of safety for SSCs important to nuclear criticality safety.

- Structural margins of safety during handling, packaging, and transfer operations, mandated by the provisions of 10CFR Part 72.236(b), require that the lifting and handling devices are engineered to comply with the stipulations of ANSI N14.6, NUREG-0612, Regulatory Guide 3.61, and NUREG-1536, and that the

components being handled meet the applicable ASME Code service condition stress limits. The requirements of the governing codes for handling operations are summarized in Subsection 3.4.3 herein. A summary table of factors of safety for all ITS components under lifting and handling operations, presented in Subsection 3.4.3, shows that adequate structural margins exist in all cases.

- Consistent with the requirements of 10CFR72.236(i), the confinement boundary for the HI-STORM 100 System has been engineered to maintain confinement of radioactive materials under normal, off-normal, and postulated accident conditions. This assertion of confinement integrity is made on the strength of the following information provided in this FSAR.

  i. The MPC Enclosure Vessel which constitutes the confinement boundary is designed and fabricated in accordance with Section III, Subsection NB (Class 1 nuclear components) of the ASME Code to the maximum extent practicable.

  ii. The MPC lid of the MPC Enclosure Vessel is welded using a strength groove weld and is subjected to volumetric examination or multiple liquid penetrant examinations, hydrostatic testing, liquid penetrant (root and final), and leakage testing to establish a maximum confidence in weld joint integrity.

  iii. The closure of the MPC Enclosure Vessel consists of *two* independent isolation barriers.

  iv. The confinement boundary is constructed from stainless steel alloys with a proven history of material integrity under environmental conditions.

  v. The load combinations for normal, off-normal, accident, and natural phenomena events have been compiled (Table 2.2.14) and applied on the MPC Enclosure Vessel (confinement boundary). The results, summarized in Tables 3.4.4 through 3.4.9, show that the factor of safety (with respect to the appropriate ASME Code limits) is greater than one in all cases. Design Basis natural phenomena events such as tornado-borne missiles (large, intermediate, or small) have also been analyzed to evaluate their potential for breaching the confinement boundary. Analyses presented in Subsection 3.4.8~~ and Chapter 3 appendices~~, and summarized in unnumbered tables in Subsection 3.4.8, show that the integrity of the confinement boundary is preserved under all design basis projectile impact scenarios.

- The information on structural design included in this FSAR complies with the requirements of 10CFR72.120 and 10CFR72.122, and can be ascertained from the information contained in Table 3.7.1.

- The provisions of features in the HI-STORM 100 structural design, listed in Table 3.7.2, demonstrate compliance with the specific requirements of 10CFR72.236(e), (f), (g), (h), (i), (j), (k), and (m).

Table 3.7.1

NUREG –1536 COMPLIANCE MATRIX FOR 10CFR72.120 AND 10CFR72.122 REQUIREMENTS

Item	Compliance	Location of Supporting Information in This Document
i. Design and fabrication to acceptable quality standards	All ITS components designed and fabricated to recognized Codes and Standards:	
	• Basket: Subsection NG, Section III	Subsections 2.0.1 and 3.1.1 Tables 2.2.6 and 2.2.7
	• Enclosure Vessel: Subsection NB, loc. cit.	Subsections 2.0.1 and 3.1.1 Tables 2.2.6 and 2.2.7
	• HI-STORM 100 Structure: Subsection NF, loc. cit.	Subsections 2.0.2 and 3.1.1
	• HI-TRAC Structure: Subsection NF, loc. cit.	Subsections 2.0.3 and 3.1.1
ii. Erection to acceptable quality standards	• Concrete in HI-STORM 100 meets requirements of : ACI –349(85)	Appendix 1.D Subsection 3.3.2
iii. Testing to acceptable quality standards	• All non-destructive examination of ASME Code components for provisions in the Code (see exceptions in Table 2.2.15).	Section 9.1
	• Hydrotest of pressure vessel per the Code.	Section 9.1
	• Testing for radiation containment per provisions of NUREG-1536	Sections 7.1 and 9.1
	• Concrete testing in accordance with ACI-349(85)	Appendix 1.D

Table 3.7.1

NUREG –1536 COMPLIANCE MATRIX FOR 10CFR72.120 AND 10CFR72.122 REQUIREMENTS

Item	Compliance	Location of Supporting Information in This Document
iv. Adequate structural protection against environmental conditions and natural phenomena.	Analyses presented in Chapter 3 demonstrate that the confinement boundary will preserve its integrity under all postulated off-normal and natural phenomena events listed in Chapters 2.	Section 2.2 Chapter 11
v. Adequate protection against fires and explosions	• The extent of combustible (exothermic) material in the vicinity of the cask system is procedurally controlled (the sole source of hydrocarbon energy is diesel in the tow vehicle).	Subsections 12.3.20 and 12.3.21
	• Analyses show that the heat energy released from the postulated fire accident condition surrounding the cask will not result in impairment of the confinement boundary and will not lead to structural failure of the overpack. The effect on shielding will be localized to the external surfaces directly exposed to the fire which will result in a loss of the water in the water jacket for the HI-TRAC, and no significant change in the HI-STORM 100 overpack.	Subsection 11.2.4
	• Explosion effects are shown to be bounded by the Code external pressure design basis and there is no adverse effect on ready retrievability of the MPC.	Subsection 11.2.11 and Subsection 3.1.2.1.1.4; 3.4.7
vi. Appropriate inspection, maintenance, and testing	Inspection, maintenance, and testing requirements set forth in this FSAR are in full compliance with the governing regulations and established industry practice.	Sections 9.1 and 9.2 Chapter 12
vii. Adequate accessibility in emergencies.	The HI-STORM 100 overpack lid can be removed to gain access to the multi-purpose canister.	Chapter 8
	The HI-TRAC transfer cask has removable bottom and top lids.	Chapter 8

Table 3.7.1

NUREG –1536 COMPLIANCE MATRIX FOR 10CFR72.120 AND 10CFR72.122 REQUIREMENTS

Item	Compliance	Location of Supporting Information in This Document
viii. A confinement barrier that acceptably protects the spent fuel cladding during storage.	The peak temperature of the fuel cladding at design basis heat duty of each MPC has been demonstrated to be maintained below the limits recommended in the reports of national laboratories.	Subsection 4.4.2
	The confinement barriers consist of highly ductile stainless steel alloys. The multi-purpose canister is housed in the overpack, built from a steel structure whose materials are selected and examined to maintain protection against brittle fracture under off-normal ambient (cold) temperatures (minimum of -40°F).	Subsection 3.1.1 Subsection 3.1.2.3
ix. The structures are compatible with the appropriate monitoring systems.	The HI-STORM 100 overpack is a thick, upright cylindrical structure with large ventilation openings near the top and bottom. These openings are designed to prevent radiation streaming while enabling complete access to temperature monitoring probes.	Section 1.5, Subsection 2.3.3.2

Table 3.7.1

NUREG –1536 COMPLIANCE MATRIX FOR 10CFR72.120 AND 10CFR72.122 REQUIREMENTS

Item	Compliance	Location of Supporting Information in This Document
x. Structural designs that are compatible with ready retrievability of fuel.	The fuel basket is designed to be an extremely stiff honeycomb structure such that the storage cavity dimensions will remain unchanged under all postulated normal and accident events. Therefore, the retrievablity of the spent nuclear fuel from the basket will not be jeopardized.	Subsection 3.1.1
	The MPC canister lid is attached to the shell with a groove weld which is made using an automated welding device. A similar device is available to remove the weld. Thus, access to the fuel basket can be realized.	Sections 8.1 and 8.3
	The storage overpack and the transfer casks are designed to withstand accident loads without suffering permanent deformations of their structures that would prevent retrievability of the MPC by normal means. It is demonstrated by analysis that there is no physical interference between the MPC and the enveloping HI-STORM storage overpack or HI-TRAC transfer cask.	Section 3.4~~ and Chapter 3 Appendices~~

Table 3.7.2

COMPLIANCE OF HI-STORM 100 SYSTEM WITH 10CFR72.236(e), ET ALS.

Item	Compliance	Location of Supporting Information in This Document
i. Redundant sealing of confinement systems.	Two physically independent lids, each separately welded to the MPC shell (Enclosure Vessel shell) provide a redundant confinement system.	Section 1.5, Drawings Section 7.1.
ii. Adequate heat removal without active cooling systems.	Thermal analyses presented in Chapter 4 show that the HI-STORM 100 System will remove the decay heat generated from the stored spent fuel by strictly passive means and maintain the system temperature within prescribed limits.	Sections 4.4 and Sections 9.1 and 9.2
iii. Storage of spent fuel for a minimum of 20 years.	The service life of the MPC, storage overpack, and HI-TRAC are engineered to be in excess of 20 years.	Subsections 3.4.11 and 3.4.12
iv. Compatibility with wet or dry spent fuel loading and unloading facilities.	• The system is designed to eliminate any material interactions in the wet (spent fuel pool) environment. • The HI-TRAC transfer cask is engineered for full compatibility with the MPCs, and standard loading and unloading facilities. • The HI-TRAC System is engineered for MPC transfer on the ISFSI pad with full consideration of ALARA and handling equipment compatibility.	Subsection 3.4.1 Subsection 8.1.1 Subsection 8.1.1

Table 3.7.2

COMPLIANCE OF HI-STORM 100 SYSTEM WITH 10CFR72.236(e), ET ALS.

Item	Compliance	Location of Supporting Information in This Document
v. Ease of decontamination.	• The external surface of the multi-purpose canister is protected from contamination during fuel loading through a custom designed sealing device.	Figures 8.1.13 and 8.1.14
	• The HI-STORM storage overpack is not exposed to contamination	Chapter 8
	• All exposed surfaces of the HI-TRAC transfer cask are coated to aid in decontamination	Section 1.5, Drawings
vi. Inspection of defects that might reduce confinement effectiveness.	• The MPC enclosure vessel is designed and fabricated in accordance with ASME Code, Section III, Subsection NB, to the maximum extent practical.	Section 9.1
	• Hydrostatic testing, helium leakage testing, and NDE of the closure welds verify containment effectiveness.	
vii. Conspicuous and durable marking.	The stainless steel lid of each MPC will have model number and serial number engraved for ready identification.	N/A
	The exterior envelope of the cask (the storage overpack) is marked in a conspicuous manner as required by 10CFR 72.236(k).	
viii. Compatibility with removal of the stored fuel from the site, transportation, and ultimate disposal by the U.S. Department of Energy.	The MPC is designed to be in full compliance with the DOE's draft specification for transportability and disposal published under the now dormant "MPC" program.	Section 2.4 Subsection 1.2.1.1