Encl. to 9/29/86 Ltr.
to Peshel from Presthal
rec'd 10/2/86 102
Pocket 11

Test Plan:
G-Tunnel Welded Tuff Mining Evaluations

by

Roger M. Zimmerman
NNWSI Geotechnical Projects Division
Sandia National Laboratories
Albuquerque, New Mexico

SNL Keystone Document
6310-85-7

August 1985

8610230167 860929
PDR WASTE
WM-11 PDR

Sign Off Sheet

Prepared by	Roger M. Zimmerman	5/22/85 Date
Reviewed by	Arthur J. Mansure	5/23/85 Date
QA Approval	Gary Romero	5/31/85 Date
Division Approval	Thomas Blejwas	7/18/85 Date
Department Approval	Thomas O. Hunter	10/29/85 Date

CONTENTS

	Page
I. Introduction	1
A. Background	1
B. Purpose	2
II. Scope, Objectives and Rationale	3
A. Scope	3
1. Location	3
2. Phases	3
B. Objectives	7
C. Rationale	8
III. Experiment Details	13
A. Pre-WTM Activities	13
1. Excavation	13
2. Drilling	16
3. Permeability Measurements	16
4. Instrumentation Installation	18
5. Preliminary Design Modeling	19
B. WTM Measurements	19
1. Control Blasting	19
2. Drift Convergence Measurements	20
3. Drift Stabilization	23
4. Drift Convergence Monitoring	26
C. Post-WTM Activities	28
1. Permeability Measurements	28
2. Drift Monitoring	30
3. Numerical Model Evaluations	30
4. Other Testing	32
D. Instrumentation - Continuous Recording	32
1. Multipoint Borehole Extensometer	32
2. Rock Bolt Load Cells	35
3. Borehole Stressmeters	35
E. Instrumentation - Discrete Measurements	35
1. Permeability	35
2. Borehole Deflectometer	36
3. Rod Extensometer	37
4. Hydraulic Pressure Cells	37
F. Data Acquisition System	38
1. Continuous	38
2. Discrete	40
G. Instrumentation Calibration	41
H. Laboratory Tests	43

CONTENTS (Continued)

	Page
IV. Experiment Management	45
A. Responsible Personnel	45
B. Schedule	45
C. Documentation	45
D. Quality Assurance	47
E. Safety	49
V. Experiment Evaluations	50
A. Objectives	50
B. Expected Results	55
VI. References	56

LIST OF FIGURES

Figure		Page
1.	Proposed Enlargement of the G-Tunnel Underground Facility	4
2.	Cross Sections at Ends of Proposed Demonstration Drift Sections Showing Stratigraphy	5
3.	Layout Details	14
4.	Drilling Patterns and Instrumentation Placement	15
5.	Concept for Concrete Insert	29
6.	GTUF Data Acquisition System	39
7.	Mining Evaluation Planning Schedule	46

I. INTRODUCTION

A. Background

Yucca Mountain on the Nevada Test Site (NTS) is comprised of a thick sequence of volcanic ash-fall and ash-flow tuffs. This mountain is being considered as a site for a nuclear waste repository, and feasibility studies for this purpose are being conducted by the Nevada Nuclear Waste Storage Investigations (NNWSI) Project.[1] G-Tunnel, located in Rainier Mesa on the NTS, intersects layers of welded and nonwelded tuffs that have similar thermal and mechanical properties and stress states to the tuffs in Yucca Mountain.[2,3] The availability of this tunnel for immediate field experimentation allows Sandia National Laboratories (SNL), a participant in NNWSI, to conduct field characterizations of tuffs without expensive excavation and facility development costs.

A suite of field experiments has been planned for G-Tunnel.[2] These are to be contained within a dedicated region at the end of the tunnel. This region is called the G-Tunnel Underground Facility (GTUF) and excavations extend into welded and nonwelded tuffs. The purpose of GTUF is to provide opportunities to develop and conduct field experiments designed for evaluation of rock mass phenomena of these tuffs. The welded tuff mining (WTM) evaluations discussed in this document are the capstone effort planned for GTUF and consist of making welded tuff rock mechanics measurements and performing evaluations needed to ensure that technologies are adequately developed prior to testing in the Exploratory Shaft at Yucca Mountain. Major repository in situ site characterization development efforts are planned in Yucca Mountain in welded tuff with the excavation of the Exploratory Shaft.

B. Purpose

The purpose of the G-Tunnel welded tuff mining evaluations is to utilize GTUF to conduct an evaluation of the rock mass behavior caused by excavation of a relatively short room, sized to dimensions representative of drifts that could be used for the horizontal emplacement concept being considered for storage of commercial high-level nuclear wastes in tuff. The construction of the special room will demonstrate the technical feasibility for mining and stabilizing this size drift in welded tuff, and measurements taken in and around the drift will be used to evaluate practices and instrumentation use planned for a similar sized room in the Exploratory Shaft.

Experiment test plans in tuff are benefitted by a brief description of the depositional and cooling processes. Tuffs are deposited because of sudden volcanic eruptions, and the resulting ash either falls or flows into sheet-like deposits. When the depositional temperatures and lithostatic pressures are sufficient, welding results. Welding, a textural term, is identified primarily by the pore space.[4] Inherent in the formation of the tuffs is shrinkage due to cooling. This cooling causes the formation of joints in the hardened rock mass. Welded tuff is more jointed than nonwelded tuff, and investigations in this medium are needed to determine the effects of the joints on the overall rock mass properties.

A special feature in this testing is that measurements are to be made in a jointed rock during the excavation process. This is the first time that this has been done in either welded or nonwelded tuffs, and these evaluations should bring out the salient features pertinent to construction-related measurements in tuffs.

II. SCOPE, OBJECTIVES, AND RATIONALE

A. Scope

1. Location

The welded tuff mining evaluations are to be an extension of the existing GTUF. Figure 1 shows a plan view of the region. A mining evaluation is to occur during the construction of the demonstration room, but mining is required in the U12g.12 drift prior to the actual WTM evaluation so that instrumentation can be set in place and measurements can be taken prior to, during, and after the actual mining of the room. Figure 2 shows elevation views of the region where the new mining would occur. The principal stratigraphic features of the welded and nonwelded tuff are shown. The general stratigraphic variations are:[5]

Upper transition	- partially to moderately welded tuff
Welded tuff	- moderately welded tuff, densely welded tuff, with greenish-yellow clay lenses.
Lower transition	- rubble zone and vitric welded tuff
Nonwelded tuff	- zeolitized ash-fall tuff

The thickness of the units from the top of the upper transition to the bottom of the lower transition is approximately 16 m.

2. Phases

a. Pre-WTM Measurements. Pre-WTM activities consist of the mining of the U12g.12 extension in the nonwelded tuff and later diamond core drilling and measurements taken from that drift. During the mining of the U12g.12 extension, drift-convergence measurement techniques are to be evaluated.

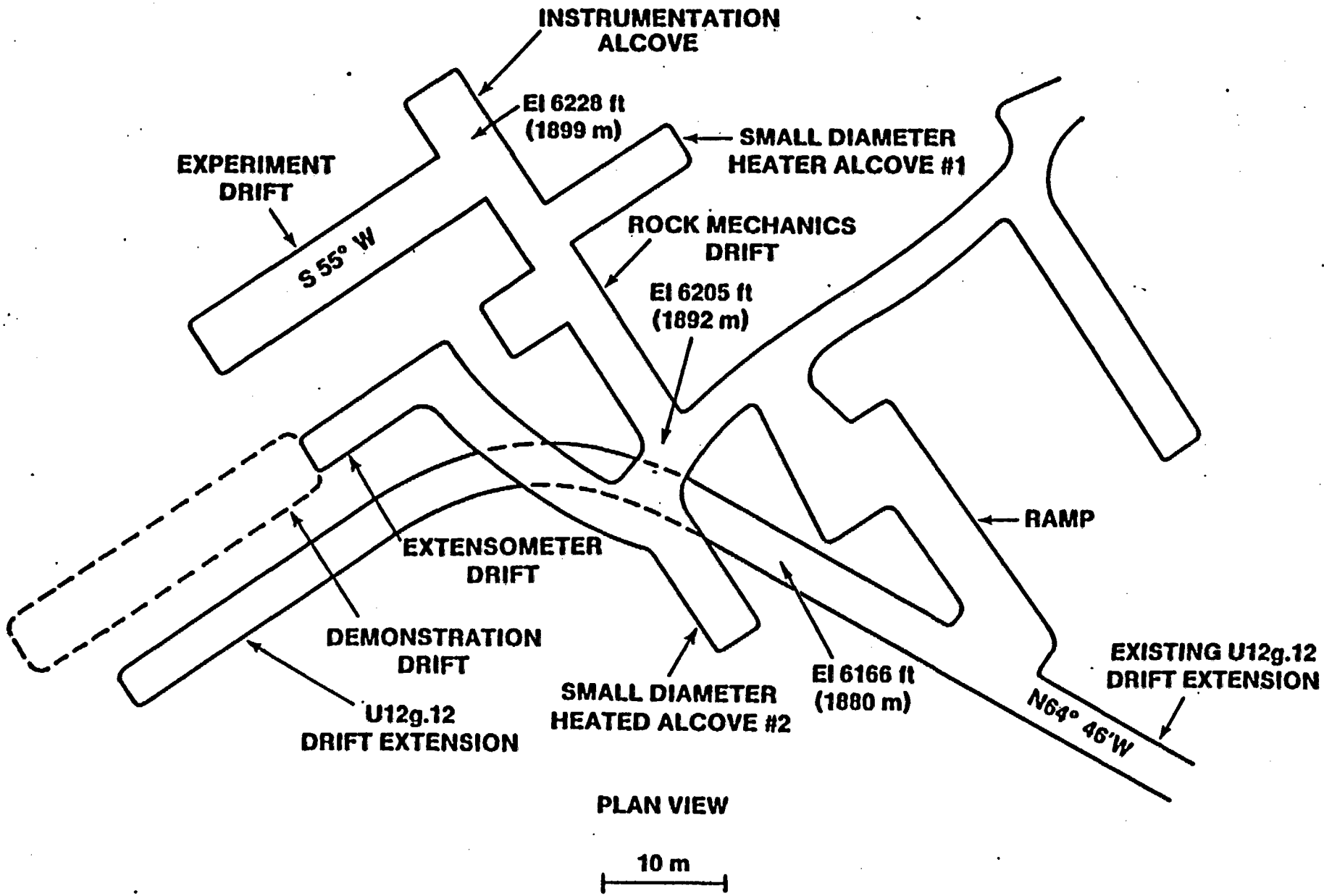

Figure 1. Proposed Enlargement of the G-Tunnel Underground Facility

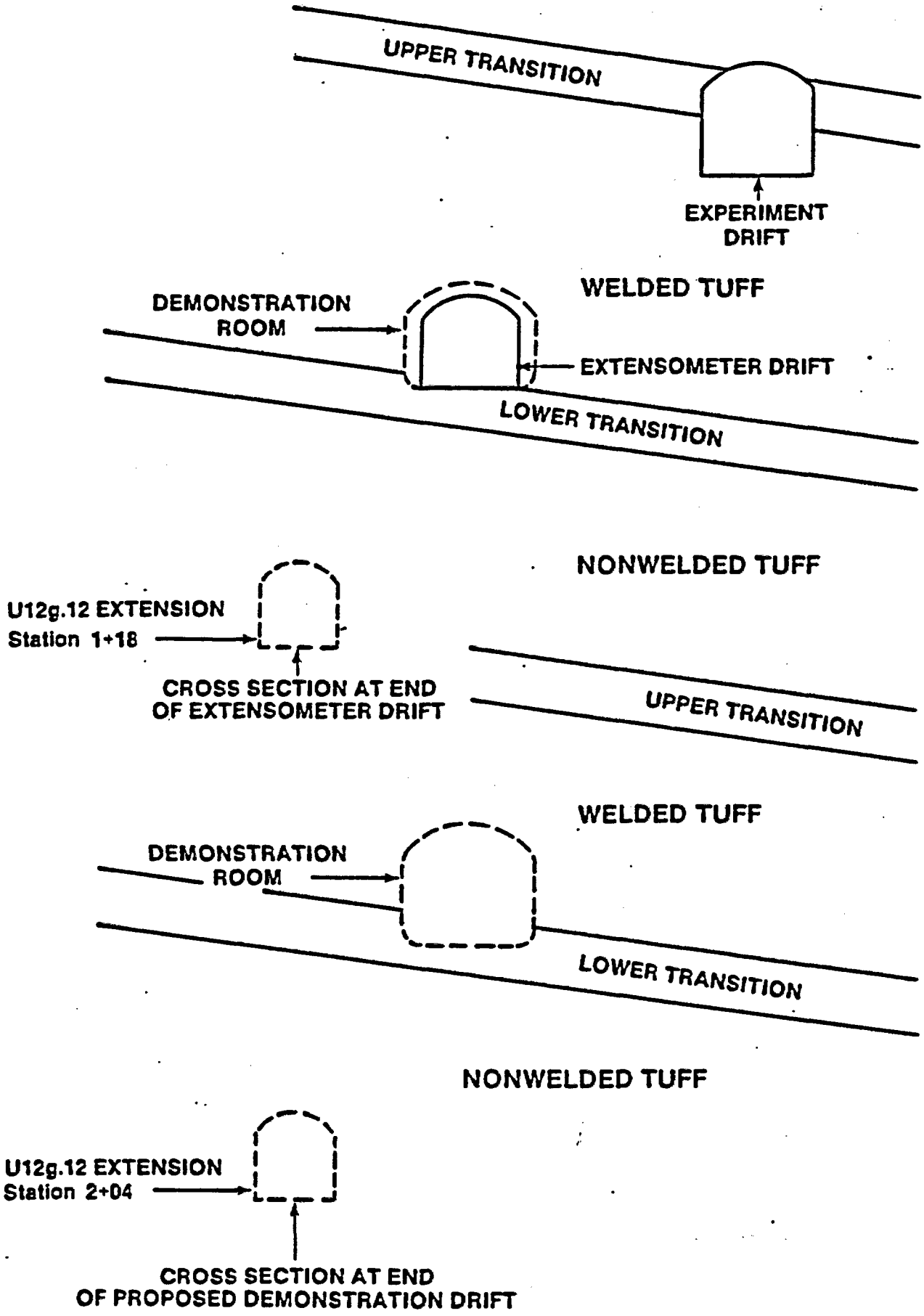

Figure 2. Cross Sections at Ends of Proposed Demonstration Drift Sections Showing Stratigraphy

Mining will be temporarily halted and vertical and horizontal drift convergence measurements will be made at eight stations along the drift to review planned measurement techniques.

After mining, 12 holes are to be diamond drilled from the U12g.12 extension into the unexcavated rock where the WTM is to occur. Six of the holes are to be used for borehole permeability measurements. Straddle packer units are to be located at sequential positions along the boreholes and pressure-flow rate measurements are to be made so that a permeability profile can be established for each hole. The process is to be repeated after the WTM so that the effects of fracturing caused by the blasting or rock mass stress redistri- bution can be detected. The other six holes are to contain instrumentation to be monitored during the WTM. Two of the holes are to contain borehole stress- meters (BSM) and the other four are to be used to monitor progressive angle changes in the rock mass as the mining face advances. Details of these and other measurements are discussed in Section III.

Two holes are to be percussion drilled from the U12g.12 drift up towards the WTM area. Multiple point borehole extensometers (MPBX) are to be installed in the holes for the purpose of (1) evaluating MPBX installation techniques and (2) later measuring the relative displacements between the two drifts. Details are discussed in Section III.

b. WTM Measurements. This phase consists of two sets of measurements taken during the mining in the welded tuff. One set of measurements will be a semiquantitative set associated with an evaluation of mining techniques.

Drilling patterns, explosive placements, fuse delay patterns, and resulting measurements of the limits of the blasting will be periodically evaluated during the mining. The second set of measurements consists of determinations of drift convergence phenomena during the sequential mining activities. The emphasis will be to monitor the rock mass behavior as the tuff is excavated. Analyses will include numerical model evaluations.

c. Post-WTM Measurements. This phase consists of all measurements taken after the demonstration room has been excavated and stabilized. Measurements will include determining changes in the rock mass behavior with and without drift stabilization using rock bolts. The permeability profile will be repeated in the remaining rock so that blast effects can be assessed. General postmining rock mass behavior will be monitored as a function of time and a rock mass displacement and rock bolt force measurement system will be available to support other nonspecified testing activities. Also, hydraulic pressure cells (HPCs) will be installed in special concrete fixtures to evaluate instrumentation placement and structural interaction effects.

B. Objectives

The objectives for the evaluations are to:

(1) Review relevance of standard rock mass rating techniques for use in defining stabilization procedures for a repository-sized room in welded tuff.

(2) Apply control blasting techniques in construction of a room in welded tuff for subsequent evaluations and recommendations for Exporatory Shaft efforts.

(3) Measure and evaluate drift convergence phenomena to determine the responses of the welded tuff to mining.

(4) Perform 2-D numerical model calculations of the repository-sized room and compare results with the measurements in objective (3) to determine reasons for any differences.

(5) Evaluate instrumentation installation techniques and resulting measurement results to improve measurement capabilities.

(6) Serve as a test facility for supplemental rock mechanics testing (i. e., plate-loading testing, possible demonstration of horizontal boring machine).

C. Rationale

Objective (1) serves as a review of applications of standard mining technology. The room is to be mined and stabilized using standard underground support designs consistent with NTS safety requirements. Designs shall include evaluations of the rock mass with standard rock mass classification systems, CSIR[6] and Q-System.[7] The construction of the room will be the first of its type in welded tuff, and the establishment of the room will serve to provide NNWSI engineers with a prototype verification of a repository-type design. The construction of the room relates to NNWSI Information Needs 4.7.1 and 4.7.8 in a generic sense.[8] These Information Needs relate to stabilizing underground openings. In particular, the construction of the room demonstrates that the underground facilities in welded tuffs can be constructed with reasonably available technology. The construction of a repository-sized room (width 6.1 m, height 3.7 m) in similar stress fields

first in G-Tunnel and later at the Exploratory Shaft provides documentation that the underground design concept using a relatively wide room is feasible. The width of 6.1 m has been selected as a compromise for repository design considerations. Currently, drifts 5.5 m (18 ft) wide are being considered for spent fuel storage, but wider alcoves will be cut at the actual canister emplacement locations. Drifts 7.9 m (26 ft) wide without alcoves are being considered for commercial high-level waste storage. The 6.1 m (20 ft) width is acceptable to repository designers for the purposes intended.

The construction of the demonstration room also relates to Nuclear Regulatory Commission (NRC) regulations in 10 CFR 60.[9] A potentially adverse NRC condition that must be evaluated at Yucca Mountain is to ensure that there are not "geomechanical properties that do not permit design of an underground opening that will remain stable through permanent closure." (60.122) The construction of the room in G-Tunnel provides for an early assessment of the underground design concept.

In a discussion of the Q-System for underground support design,[10] it was pointed out that estimates of supports are required in three stages in a project: "for the feasibility studies, for the detailed planning, and finally during excavation itself." The evaluation of the performance of the welded tuff in G-Tunnel will serve as a major factor in preparing for the detailed planning stage for Yucca Mountain because NNWSI mining engineers will then have a prototype facility to relate designs to.

Objective (2) addresses control blasting evaluations. NRC 10 CFR 60 (60.133)[9] requires that "openings shall be designed to reduce the potential for deleterious rock movement or fracturing of overlying or surrounding rock." Also, "the design of the underground facility shall incorporate excavation methods that will limit the potential for creating a preferential pathway for ground water." The monitoring of the damage through inspections of blast effects during the mining and the preand post-WTH fracture permeability evaluations addresses these two requirements. Results from these studies serve as benchmarks for similar evaluations planned for the Exploratory Shaft.

Objective (3) deals with the measurement of drift convergence phenomena. NNWSI Information Need 4.7.4 calls for determining the potential impacts of rock characteristics on a repository design. The in situ stress state in G-Tunnel is similar to that expected at Yucca Mountain because the tunnel has a 430-m overburden and the horizontal stress state appears to reflect the regional trends.[11] Within the technology of rock mechanics, there is a philosophy that "monitoring the behavior of underground excavations under construction is the most reliable aid in the design and construction of rock tunnels and chambers."[12] Drift convergence displacements are indicative of either stable or potentially unstable behavior. Three factors are significant:[12]

(1) Magnitudes of displacements.

(2) Rates of displacements.

(3) Displacement capacities of the support system and the rock mass.

Reference 12 with documentation from Reference 13 states that "when displacements exceeded the predicted elastic displacements by a factor of 5 or 10, the excavation and support procedures had to be modified to prevent further large movements." Most of the large displacements were on the order of 12 to 75 mm. Similar data for welded tuff do not exist, and the proposed testing would provide this data. "Experience shows that rates of displacement on the order of 0.001 mm/day indicate stable conditions, rates of 0.05 mm/day are quite high and dangerous for wide chambers, while rates of over 1.0 mm/day are excessive and call for additional support measures."[12] From the capacity standpoint, excessive displacements can result in failure of shotcrete or rock bolts, which are common light-duty support systems. "Displacements should also not exceed the capacity of the rock mass to maintain its strength and coherence since rock strength along joints decreases with displacement as irregularities on the joint surface are sheared or overridden."[12]

Objective (4) deals with a model evaluation of the drift convergence phenomena. This model evaluation effort is not a model validation. The variations in stratigraphy of the welded tuff over a relatively short distance of 16 to 20 m provides sufficient warning to cause caution about overpredicting model-measurement comparison agreements. Premining predictions for the record are not planned. Premining elastic calculations will be made to determine the instrumentation sensitivity requirements. The 2-D jointed rock model will be made available prior to the actual mining but not until after the mining is completed will the final model be completed. Included in the mining is a fracture-mapping effort. Results from the mapping will be incorporated into the model for use during the analysis and model-measurement

evaluation period. Results from this evaluation effort should provide key information required to perform a model validation in Exploratory Shaft testing.

Data from Objective (3) will play a prominent role in the evaluations. The need for a model evaluation is defined by the NRC in its requirements for a Safety Analysis Report (60.21).[9] In particular, "analyses and models that will be used to predict future conditions and changes in the geologic setting shall be supported by using such methods as field tests . . . which are representative of field conditions, monitoring data, and natural analog studies." Models require groups of data describing the real system and must contain descriptions of the system geometry, rock mass stratigraphy, data on material properties, and descriptions of load distributions.[14]

Objective (5) deals with the acquisition of experience with instrumentation and measurements. Much of the proposed instrumentation has not been used in construction-related activities in tuff, and this evaluation provides the opportunity. Since some instrumentation must be used close to the mining face, there is a need to evaluate the performance of the instruments in the proximity to the blasting. There is also a need to develop measurement techniques for all phases of testing. In particular, the fracture permeability profiles have not been used for this purpose; thus, reliable techniques must be developed.

Objective (6) is dedicated to overall NNWSI project efficiency. The construction of a demonstration room with repository-size dimensions in welded tuff provides other researchers with an opportunity to make measurements in an

environment similar to that expected in Yucca Mountain. A plate-loading test is planned for the Exploratory Shaft, and the demonstration room would serve as an excellent facility to establish field procedures. Canister-scale boring machine evaluations are being considered.

III. EXPERIMENT DETAILS

A. Pre-WTM Activities

1. Excavation. Figure 3 shows the layout details for the excavations. Pre-WTM excavations pertain to the extension of U12g.12. The drift is to terminate 26 m from a plane running through the end of the present Extensometer Drift. The dimensions of the drift are 3.7 x 3.7 m. The lower drift is to be mined with an Alpine miner and stabilized with rock bolts and wire mesh. The drift is to have an upward slope of 0.5 percent, which is normal for drift construction on the NTS.

Figure 3 shows locations for measurement stations in the Demonstration Drift, which are identified as sections A through G. The figure shows typical anchor locations for the U12g.12 drift convergence measurement evaluations. Anchor posts made from rock bolts, approximately 0.5 m long, are to be bonded to short percussion-drilled holes. The anchor posts are to contain eyebolts suitable for tape extensometer measurements. A Terrametrics unit, model 50-SN820331-2, is to be used for the measurements. The dial gage can be read to 0.0025 mm. At least eight measurement stations will be selected along the drift. Actual locations will be coordinated as the mining advances. Emphasis will be on placing the anchors so they will last during the mining and provide reliable measurements. Records will be kept as to the locations of the station of the mining face and the station of the last row of rock bolts, so that effects of excavation and drift stabilization can be discerned.

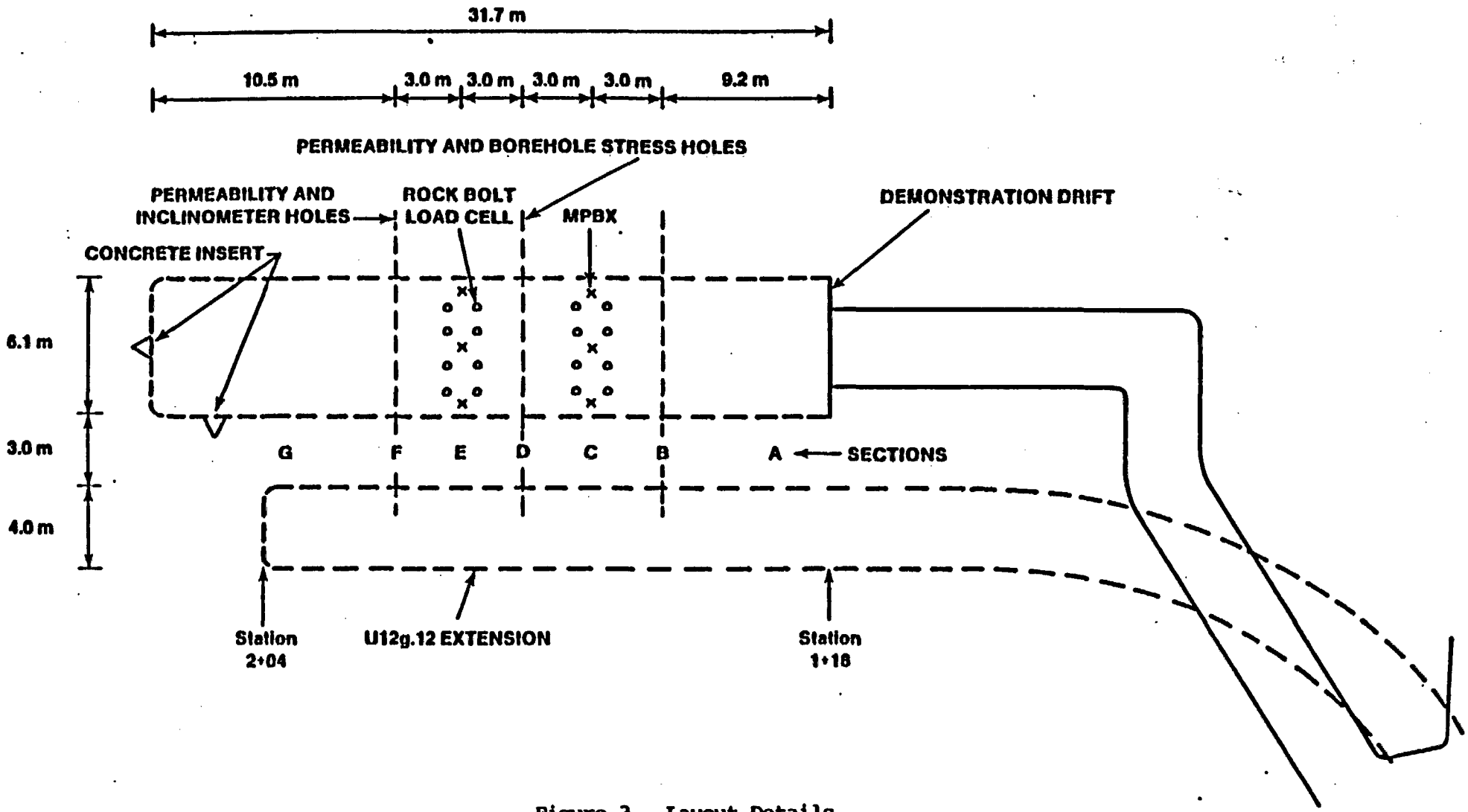

Figure 3. Layout Details

2. Drilling. Figure 4 shows the drilling pattern for pre- and post-WTM activities. Twelve Pre-WTM holes will be diamond drilled with core recovery from the U12g.12 extension. Cores will be logged and standard geological inspections made. The holes will be drilled in three planes, identified by sections B, D, and F in Figure 3. Two permeability holes are to run through the 1/4 points, within ±0.5 m, across the width of the demonstration room at each section. The stressmeter/deflectometer holes are to be within 1 m ±0.25 m of the corners of the room. Holes will have to be aligned after field surveys of the U12g.12 drift has been completed. The permeability-holes will be nominally 24 m long and the others 19 m.

3. Permeability Measurements. A single borehole permeability measurement can be made by isolating a test interval with straddle packers and performing steady-state pressure-flow rate measurements in the interval. Flow measurements in jointed rock are dominated by joint or fracture effects. This flow is sensitive to the aperture dimensions, spacings, and asperities. Estimates of permeabilities for flows dominated by joint effects can be determined using analyses of flows between parallel plates.[15] Fracture or joint flows in packed-off boreholes are represented by an equation that describes hydraulic conductivity in cm/s. This equation is:[15]

$$K_s = \frac{e^2 w}{12} \qquad (1)$$

where

K_s = hydraulic conductivity (cm/s)

e = aperture (cm)

w = weight per unit volume (N/cm^3)

= viscosity of water (N-s/cm^2)

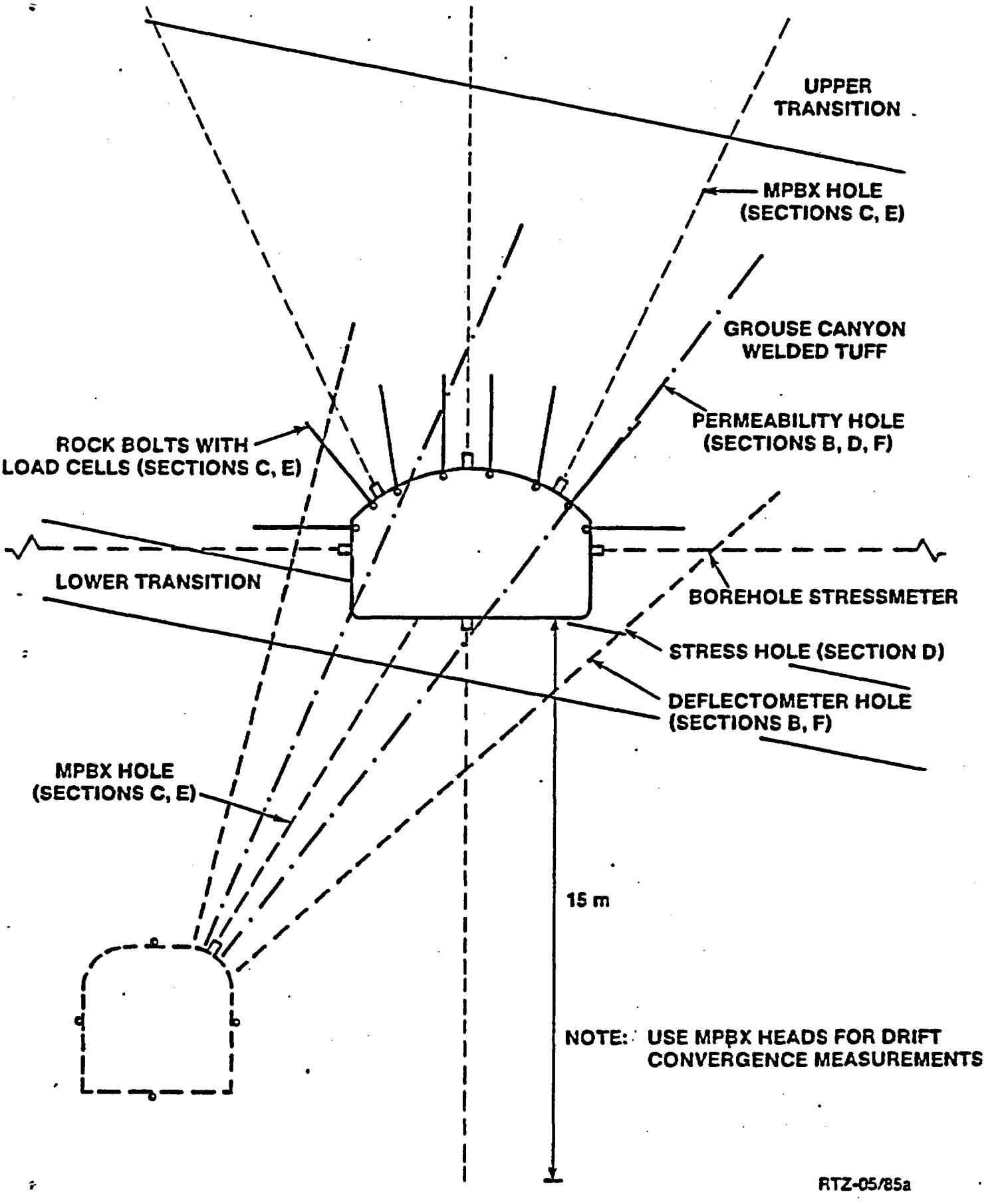

Figure 4. Drilling Patterns and Instrumentation Placement

A necessary calculation is determining the aperture dimension from the flow measurements. This is accomplished with the following equation:

$$e = \frac{12\ Q\ Ln\ (L/r)}{2\pi n\ H_o\ \gamma_w}^{1/3} \qquad (2)$$

where

Q = flow rate through test section (cm^3/s)

n = number of intersecting joints

H_o = pressure head (cm)

L = length of test section (cm)

r = radius of hole (cm)

Use of pre- and postmining permability measurements for mining evaluations is being developed in this experiment. A portion of Equation (2) is extracted to form the key quantity to be used in these evaluations. The quantity (Q/nH_o) is called the hydraulic quotient (HQ). The Q and H_o quantities are measured directly with the permeability testing apparatus. Experience has shown that the determination of the quantity n is difficult in tuff.[11] We do not plan to try to measure the quantity n in this testing because we are trying to use the permeability testing as a diagnostic aid to show changes due to the mining activities. The plan is to determine the HQ quantity for successive intervals, nominally 0.6 m long, in each of the test holes for the pre- and postmining conditions. The establishment of the profile was outlined by Hodkinson.[16] The HQ quantities will be plotted as a function of length of the holes for the two conditions and differences will be observed and analyzed. It is expected that the mining activities associated with the

mining of the demonstration room in the welded tuff will cause disturbances in the rock mass around the opening and that these disturbances will appear as changes in the HQ quantities. These profile comparisons should also provide documentation as to the limits of the zone disturbed by the mining.

The principal equipment used with these tests consists of a pair of straddle packers suitable for use in NQ-size holes, a turbine water pump, a nitrogen tank with a regulator used to inflate the packers, a manifold that regulates flow into two pipes, a water meter that measures flow, and a pressure gage. The straddle packers are to be designed so that the test interval is approximately 0.5 m long.

The HQ profile is to be established by performing pressure-flow rate measurements at 0.6-m intervals along the length of each borehole located in the welded tuff. Measurements will be taken at five different pressures, nominally 0.3, 0.6, 0.9, 0.6, and 0.3 MPa, at each measurement station along the borehole. The packers will be deflated, the assembly will be translated 0.6 m, and the five-pressure measurement process will be repeated.

4. Instrumentation Installation. Three types of instruments will be installed or used in the remaining holes. Borehole Stressmeters (BSM) will be installed at Section D and tubing for a Borehole Deflectometer (BDM) will be installed at Sections B and F (Figure 3). Details for these sensors will be discussed in Section III.D. The BSMs will be located approximately as shown in Figure 4. Precise location will be established after the numerical

calculations have been completed and convenient measurement points located. Borehole fracture patterns will also be considered prior to placement. BSMs will take measurements in the vertical plane. BDM tubing will be installed, and the BDM will traverse the length of the holes to initialize the measurements. Figure 4 also shows the locations of MPBX holes planned for the premining efforts. MPBX holes are to be percussion driven from the U12g.12 drift to the base of the Demonstration Drift. Four anchor MPBXs, Type D (Section III.D), are to be placed in the holes, with anchor locations being at 1 m intervals starting from the ends of the holes nearest the welded tuff.

MPBX and BSM instrumentation will be connected to the DAS prior to the initiation of the mining in the Demonstration Drift.

5. Preliminary Design Modeling. Finite element calculations have been made to evaluate the sensitivities of the instruments planned for use. A linear elastic model in the computer code JAC was used in the calculations. The calculations were used to establish the feasibility of the borehole deflectometer measurements and to provide guidance as to expected ranges for drift convergence measurements. These calculations indicate that maximum angle changes could be as high as 80 μs over a 1-m length. The instrument selected has a sensitivity of 2 μs. These calculations also indicated that the total magnitude of the vertical drift convergence could be as high as 7 mm.

B. WTM Measurements

1. Control Blasting. Control blasting techniques will be established and evaluated by an outside consultant, who will specify drilling patterns, explosive loading patterns and quantities, and fuse lengths. The blasting

round will be detonated and the consultant will inspect the excavated area, and make recommendations for changes before work starts for the next round. It is expected that the blasting techniques along the drift length will improve with this experience. The goal for the control blasting evaluation will be to recommend control blasting techniques for the Exploratory Shaft.

A feature in the control blasting studies will be evaluations of different drilling patterns or blast conditions at stations B, D, and F. These are the stations where permeability profiles are to be taken, and it is desirable to relate mining methods to those measurements.

2. Drift Convergence Measurements. The principal purpose for these measurements is to document the drift convergence during the excavation stage. An expected output from the measurements is a definition of the rate of drift convergence for the welded tuff for conditions with the addition of rock bolts and wire mesh.

As soon as a round has been detonated and the muck cleared away at stations C and E (Figure 3), a team will begin percussion-drilling holes 15 m deep for placement of multipoint borehole extensometer (MPBX) anchors. The holes will be oriented as shown in Figure 4. Six anchor MPBXs will be located in four holes and installed according to manufacturer recommendations for vertical and horizontal holes. Four anchor MPBXs will be installed in the two off-vertical holes. The anchors will be located near the excavated surface with measurements concentrated within 6 m. Actual anchor locations will be selected based on the geological features found in the boreholes. Emphases will be on taking measurements close to the drift surface. The collars will

be recessed into the surface so that a cover plate can be installed to protect the sensors in a manner like that used in similar measurements taken during shaft construction.[17]

Four of the six-anchor extensometers are to be made by the same manufacturer and are the ones proposed for Exploratory Shaft testing. The extensometer deformations can be read with a dial gage or remote readout using ultrasonic sensing techniques. Two pairs of other types of six-anchor extensometers will be installed so that there will be in situ evaluations of the advantages and disadvantages of each. The remaining four extensometers are four-anchor units and will be located on both sides of the six-anchor units.

Included in the fabrication of the heads of the extensometers will be anchors that can be used for primary drift convergence measurements using a rod extensometer. Vertical and horizontal measurements will be taken immediately after the installation of the heads at the two stations. The MPBX and rod extensometer measurements will be initialized, and work will then commence on drilling for the next round. These measurements will be read after the next three or four rounds or until the measurements stabilize, so that desired excavation effects of rock removal can be ascertained.

For cross-drift measurement checking, the drift convergence measurements taken with the rod extensometer will be compared with MPBX head movements to evaluate the compatibility of the measurements. If the deepest anchors for the MPBXs are located sufficiently deep, then the relative head movements should in fact be the displacements measured with the rod extensometer.

As a companion study, measurements between the head and anchors of the MPBXs can be used to determine the uniformity of the rock mass around the opening. Such determinations are useful in model evaluations. The governing equation is:[18]

$$E_d = \frac{K_{zi} - K_{zj}}{W_{zi} - W_{zj}} \tag{3}$$

where

E_d = modulus of deformation for interval between anchors i and j.

K_{zi} = Function incorporating stress state and Poisson's ratio as a function of z.

W_{zi} = Relative displacement of anchor i to MPBX head.

Z_i = Distance from MPBX head to anchor i.

Equation (3) is useful because the borehole head-anchor measurements can be made between two succeeding anchors and the modulus of deformation for that interval can be determined. The use of differences in the displacements for each anchor interval allows the analyst to perform calculations without needing a quantitative description for the head movement.

Differences in displacements can be calculated for succeeding anchor intervals from the collar to the deepest anchor, and the gross variation of the modulus as a function of length along the boreholes can be determined. These values will be compared with those used in the modeling evaluations.

There is a possibility that a significantly reduced modulus should be used to describe rock mass behavior for the first 1 or 2 m around a drift opening, and these investigations should provide this information. An expected output from these measurements and analyses will be a preliminary assessment as to limitations on the applications of elastic theories to the behavior of welded tuff. If necessary, nonlinear computer analyses will be initiated to study the measured behavior to determine the dominant mechanisms contributing to the observed rock mechanical behavior.

Efforts to establish estimates for the relaxed zone at each of the measurement stations will be coupled with the analyses of the variations in the modulus of deformation as a function of borehole length. These measurements will be compared with pre- and postpermeability measurements to assess whether they are compatible. If significant differences exist, they will be investigated analytically and hypotheses formulated. These latter will serve as important input conditions for designing the more elaborate Exploratory Shaft experiments.

3. Drift Stabilization. The behavior of an opening in a rock mass requiring partial support depends on the load-deformation characteristics of the rock mass and the support. The interaction between a support and the rock is the key ingredient to underground stability. The essential contribution of the reinforcement is to assist the rock mass in supporting itself. Many underground openings have been stabilized with supports defined through empirical methods. Successes in the designs of supports are attributed to the effectiveness of geological investigations and on the ability to extrapolate past experiences of support performances to new rock mass environments.[10] A

method of extrapolating past experiences of support performance to new rock mass environments involves, as a minimum, rock mass classification systems. The basic classification parameters are:

CSIR[6]

Strength of Intact Rock Mass

Rock Quality Designation (RQD)

Spacing of Joints

Condition of Joints

Ground Water Conditions

Strike and Dip Orientation Effect

Q-System[7]

Rock Quality Designation (RQD)

Joint Set Number

Joint Roughness Description

Joint Alteration Number

Joint Water Reduction Factor

Stress Reduction Factor

Preliminary applications of these rock mass ratings for the welded tuff in G-Tunnel indicate that the standup time for an unsupported roof span of 4.5 m would be 25 to 605 days, and the maximum unsupported roof span or room height would be 3.4 to 8.5 m.[19] Results from both of these classification systems suggest that the proposed span would be marginal as an unsupported span, and cursory observations support the normal NTS safety requirements for a minimum of 3.6-m rock bolts at intervals of 1.2 m supporting an 11-gage wire mesh. A

factor not included in the rock mass classification systems is the occasional man-made ground motion that occurs on the NTS, but short time experience (30 yr) indicates that this type of support is adequate in tunnels constructed in a weaker nonwelded tuff.

To compare some of the rock mass rating results available for G-Tunnel and Yucca Mountain should help show the relevance of the proposed testing to the Exploratory Shaft efforts. Langkopf and Gnirk listed a range for the NGI tunneling quality index (Q-System) of 34 to 3.08 for the welded tuff in G-Tunnel and 53.3 to 1.46 for the Topopah Spring Member in Yucca Mountain.[19] They listed a CSIR geomechanics classification of 60 to 80 for G-Tunnel and 60 to 87 for the Topoah Spring Member. Dravo engineers evaluated the Topopah Spring Member in another study and listed a CSIR geomechanics classification range of 38 to 73 and Q system range of 25 to 0.06.[20] Differences between these two evaluations are not major, but the numbers do show that there are significant differences in the predicted support requirements. In the Dravo study, using the Q-system on the central block considered for the candidate repository, it was pointed out that the ground supports could vary as a minimum from rock bolts and wire mesh to more elaborate shotcrete systems with welded wire mesh and rock bolts. Obviously there is need for better documentation of the behavior of welded tuff if we are to predict behavior adequately for repository use.

The requirements for predicting drift performances for repository use extend the state-of-the-art technology for predicting rock mass performance because of the addition of heat and accompanying thermal stresses. Required evolutional developments of this nature are based on a careful documentation

of the existing ambient temperature techniques and performance monitoring of prototype-size drifts.

From an operational standpoint, the freshly exposed surfaces of the demonstration room will be mapped as the mining progresses. Details appropriate for input into the two classification systems will be collected and the rock mass ratings updated to reflect the most current conditions. The deformation measurements before and after the placement of the rock bolts and wire mesh will be analyzed to determine the influence of rock bolt performance on drift convergence rates. Because of these needs, it is planned that the rock bolting and wire mesh will be added some 6 m behind the face as long as NTS safety conditions permit. Unpublished mining experiences of the GTUF Extensometer Drift suggest that this is feasible.

The eventual evaluations will relate the deformational responses of the welded tuff to the rock mass classification systems so that a better predictive model can be established. Based on this model, recommendations will be made regarding improvements necessary to improve predictive capabilities.

4. Drift Convergence Monitoring. Included within drift convergence monitoring will be a continual recording of drift convergence after the rock bolts have been installed. It is hoped that the data trends before and after the rock bolt installation will be sufficiently distinct so that pre- and postsupport drift convergence rates can be defined. If the rates are extremely low, then measurement errors could mask the desired variations.

After the demonstration room has been excavated and the rock bolts placed, rock bolt load cells (RBLCs) will be installed on rock bolts on each side of sections C and E (Figure 3). The purpose of these load cells is to monitor changes in the rock bolt forces as the rock mass makes its final adjustments to the excavated state. It is not expected that the behavior will be predictable, but it is hoped that possible nonuniform changes in rock bolt forces can be related to expected deformation irregularities measured at the sections. Analyses and correlations will depend heavily on the surface maps of the region at these sections. Eight RBLCs are to be added at each section for completeness. Figure 4 shows the configuration.

HPCs are to be installed in the lining of the Exploratory Shaft. Measurements with these cells are sometimes questionable,[17] but they do provide a measure of stresses within a broad tolerance band and these are the data that are sought. Pressure measurements may not correlate with elastic theories or even nonlinear numerical models, but measurements of general magnitude provide proof that unexpected stress rise phenomena do not occur around an opening. The main reason for installing the HPCs in the WTM is to gain that experience for later use in Exploratory Shaft testing.

Since the main focus in the applications of the HPCs to the WTM is to evaluate the installation measurements techniques in a mining environment, the entire process is kept simple. A main feature in the installation of the HPCs is to place them behind a form and then place concrete so that it envelop the HPC. We are concerned about the falling concrete disturbing the HPC placement and also about the possibility of air pockets being formed around the HPCs.

Figure 5 shows the testing concept that is planned for G-Tunnel simulation. A wedge shaped cavity is to be mined into two ribs of the Demonstration Drift. The wedge can be removed with ordinary mining techniques. The wedge will then be covered with a sheet of plywood and rock bolted to the rock forming a cavity. The plywood will contain the HPCs, which will be installed in a similar manner at is expected for the shaft liner at the Exploratory Shaft. An opening will have been made in the top of the plywood so that concrete can be placed to fill the cavity. After a 7 day cure, the plywood will be removed and the rock bolts will be retightened to the concrete surface. Thus a concrete insert is formed in the welded tuff.

The HPCs will be monitored as soon as is practical after installation and measurements will continue for a minimum of thirty days after installation. Then miners will chip out the HPCs so we can determine an adequacy of the installation and contact with the rock. From this, recommendations will be made for future applications.

C. Post-WTM Activities

1. Permeability Measurements. Pre-WTM permeability measurements procedures will be repeated in the welded tuffs surrounding the opening and a revised permeability profile established. The pre- and post-WTM profiles will be plotted and compared and differences investigated. The investigations will be focused on defining the region around the opening that is disturbed by the mining. Disturbances can be due to blasting and rock mass relaxation caused by stress redistributions around the opening. The boreholes will be viewed with a borescope, and the fracture patterns within the first 2 m on either side of the opening will be mapped. Attempts will be made to estimate the limits of the blast-damaged region.

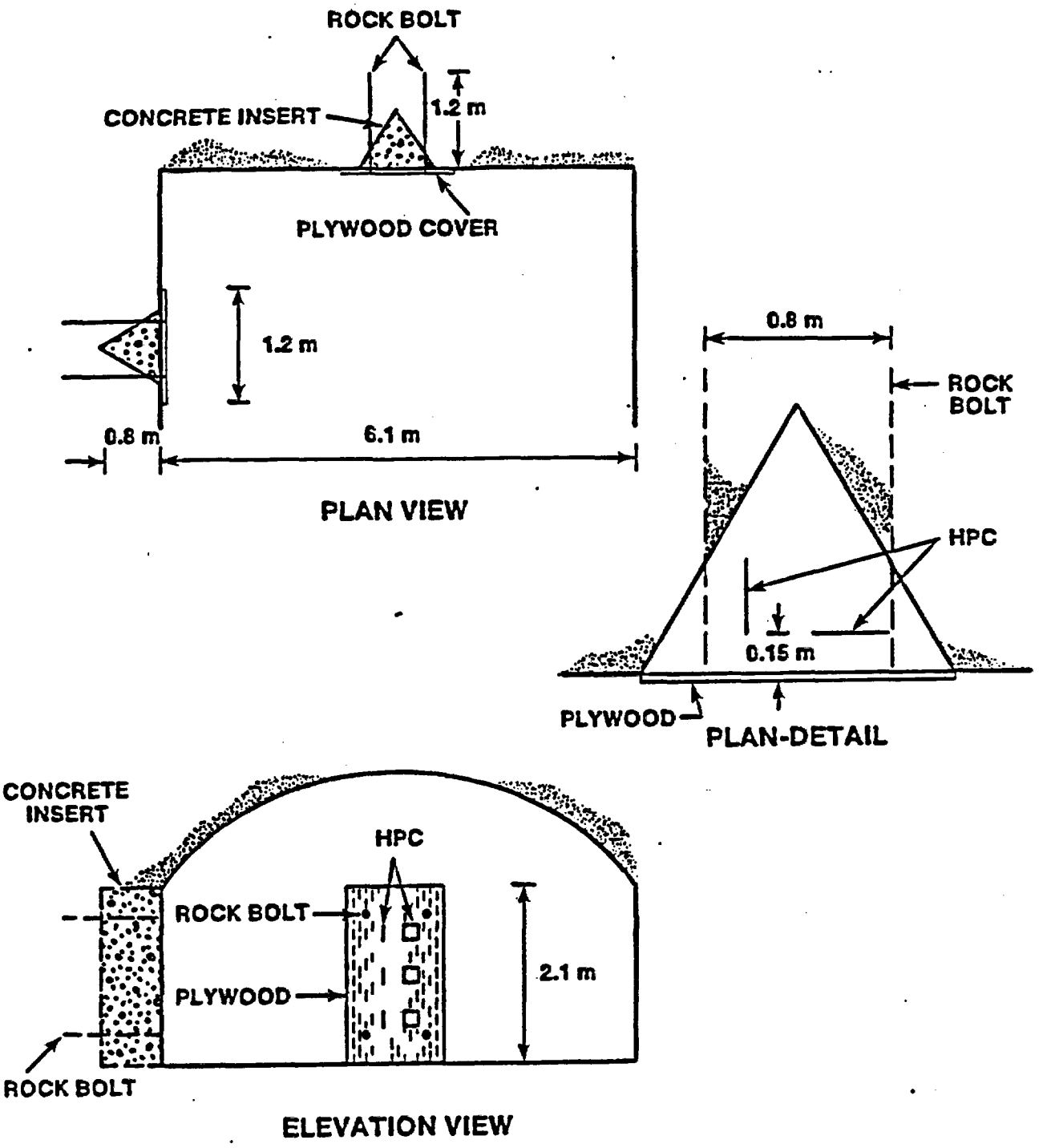

Figure 5. Concept for Concrete Inserts

Obviously there will be differences in the HQ profiles for each of the holes, and one of the analyses will be to establish the extent of variability among the holes. These results should serve as a guide for designing similar measurements in the Exploratory Shaft.

2. Drift Monitoring. Measurements from MPBXs, BSMs, and RBLCs, would continue for at least 3 mo after the last instrument is installed. Measurements will be factored into numerical model and drift stability analyses.

3. Numerical Model Evaluations. Models are to be prepared to predict rock mass responses for the WTM. Different two-dimensional models will be used for different purposes. Preliminary design 2-D modeling has been completed using the elastic continuum assumption. A linear modulus of deformation was used. This model has been used so that instrumentation sensitivity requirements can be defined. A jointed rock model will be used for model evaluations.

During the excavations of the room, the fractures will be mapped. Results will be made available for one of two 2-D jointed rock models that will be used for further evaluations. If the mapping shows that the jointing is irregular in orientation and continuity, then a jointed rock model using a statistical description of the joints in a continuum will be used.[21] If the mapping shows that the fractures can be represented with up to three orthogonal joint sets with fixed orientations, then a more elaborate model will be used.[22] This model contains five parameters describing joint shear

properties. The evaluations will be directed toward finding the best model that is available to describe the rock mass.

Next, the measured deformations will be compared with the predicted values and an error analysis initiated. Considerations will be given for use with the direct and inverse methods.[14] Comparisons of results of numerical calculations and field measurements usually result in differences. Two methods are popular in resolving these differences: the inverse method and the direct method. The inverse method consists of rearranging the governing equations so that some desired parameter, such as specific material properties, appears as a set of unknowns. Since the final system of displacements consists of more measurements than are required for the calculations, optimization techniques are employed to solve for the selected unknowns. In the direct method, the model is set up so that the calculated quantities, i.e., displacements, are the unknowns, and trial values for various parameters are input into the equations to reduce the error between the calculated and measured values. The direct approach lends itself better to nonlinear analyses but may consume considerably more computer time with resulting higher costs and possibly evaluation time delays. It is not clear which method should be used for welded tuff, but evaluations in G-Tunnel provide researchers with the opportunity to determine the best method to resolve future differences. Furthermore, the procedures for the model validation exercise in Yucca Mountain will be developed in this effort.

The focus will be on reducing the apparent discrepancies and assessing whether the resulting differences are due to model limitations, parameter definitions, stratigraphic variations, or measurement limitations and/or

errors. The final output of this exercise will be a best-fit comparison of the field and predicted with explanations for resulting differences. Recommendations will be made for improvements in planned model validation efforts.

4. Other Testing. It is planned that a plate-loading test will be performed in the demonstration room. The test will be performed with procedures recommended by the ISRM.[18] Details are not included in this test plan.

D. Instrumentation - Continuous Recording

Table 1 provides a listing of the planned instrumentation. The instrumentation is divided into categories of continuous and discrete measurements; the former category refers to instrumentation connected to the data acquisition system (DAS).

1. Multipoint Borehole Extensometer. Four MPBX configurations are to be used. The first, referred to as Type A, is an IRAD Model 4500, six-point borehole extensometer. The unit has Invar rods and groutable anchors. The unit is designed so that rod travel can be measured with a depth micrometer or a sonic probe. It is planned that the depth micrometer will be used during the mining phase, and this implies discrete measurements. After the deformations have stabilized behind the advancing face, the sonic probe will be installed for continuous monitoring.

The operation of the sonic probe is based on measuring the time interval required for a stress wave to travel between two or more points in a tube of

Table 1. Instrumentation Listing

Instrumentation	Description	Manuf.	Placement Location	No. Units	Size Hole
Continuous					
Multiple-Point Borehole Extensometer (MPBX)	6-Anchor - Sonic readout 15 m depth (Type A)	IRAD	Sect. C, E	4	NQ
	6-Anchor - Linear potentiometer 15 m depth (Type B)	GeoKon	Sect. C	2	NQ
	6-Anchor - DC-LVDT 15 m depth (Type C)	Terrametrics	Sect. E	2	NQ
	4-Anchor-DC-LVDT 15 m depth (Type D)	Terrametrics	Sect. C, E	6	NQ (2 Percussion)
Rock Bolt Load Cell (RBLC)	60-ton (535 KN) - Steel units for 22.2 mm bolts	Terrametrics	Sect. C, E	16	--
Borehole Stressmeter (BSM)	Rigid Inclusion - Strain Gage Principle	SNL	Sect. D	2	AQ
Discrete					
Permeability	Steady State - Borehole Injection	SNL	Sect. B, D, F	1	NQ
Deflectometer	Transversing Borehole Deflectometer	Terrametrics	Sect. B, F	1	NQ
Rod Extensometer	Removable Type RF4	IRAD	Sect. C, E	1	--
Hydraulic Pressure Cells (HPC)	Glotzl Concrete Stress Cells 400 bar	Terrametrics	Sect. A, C	12	--

magnetostrictive material contained within the probe. The time interval measurement is converted to a displacement with a sensitivity to ±0.025 mm. Measurement ranges can exceed 0.3 m. The unit is designed for remote signal readout for distances up to 183 m in environments with high electrical noise. The type A MPBXs are designed for manual measurements using a special readout box provided by IRAD. We are modifying the data acquisition concept for this testing. The readout box is connected to a specially designed switching unit controlled by the computer. When data are to be taken, the computer activates the switch box, which in turn causes the IRAD readout box to enter the reading for each channel into the data logger. Thus, the IRAD system monitoring is the same as the other types of MPBXs.

A Type B MPBX is a GeoKon Model A-3, six-point borehole extensometer. The unit is designed for groutable anchors and contains Invar rod. The sensing unit is a linear potentiometer with a measurement range of 10 cm and a sensitivity to ±0.025 mm.

The Type C MPBX is a Terrametrics Model 293-6CSLTCR1, six-point extensometer with groutable anchors. The rods are made of Invar. The sensing unit is a DC-LVDT with a 10-cm measurement range and a sensitivity to ±0.025 mm.

The Type D MPBX is a Terrametrics Model CSLT-4, four-point extensometer with groutable anchors. The other details are similar to the Type C units.

2. Rock Bolt Load Cells. Rock bolt load cells selected are Terrametrics Model PC-60, steel units. The units have a capacity of 535 KN with a sensitivity to ±267 N. The units are fabricated with strain gages as the sensing elements. They are to be attached using manufacuturer-supplied installation procedures to 22-mm-diameter mild steel rock bolts that have epoxy anchors.

3. Borehole Stressmeters. The borehole stressmeter selected is an SNL-developed unit.[23] The unit is the rigid inclusion type with a strain gage sensor. The stressmeters are to be installed into AQ-size boreholes with specially fabricated wedges. Subsequent rock mass unloading compresses the wedges, and borehole stress changes are determined from data processing of the strain gage voltage changes. The BSM has a sensitivity of ±130 kPa.

E. Instrumentation - Discrete Measurements

1. Permeability. Test equipment and instrumentation for fracture permeability testing are not standard. The principal equipment used downhole consists of a pair of straddle packers suitable for use in NQ-size holes. The straddle packers are connected by a short perforated pipe so that a pressurized length of approximately 0.5 m is available. The packers are to be inflated with nitrogen to a pressure less than 2.4 MPa. The packer is connected to a flowmeter and pressure gage with pressure pipes. The flowmeter, manufactured by Flow Technology, has a water flow range up to 6×10^{-4} m^3/s. The sensitivity of the flow meter is to be within 6×10^{-6} m^3/s.

The pressure gage, manufactured by Kulite, has a range up to 1.4 MPa. The pump, manufactured by Robbins and Myers, Inc., is rated up to 6×10^{-4} m^3/s. Flow rates and injection pressures are regulated with valves. Measurements are to be taken under steady-state flow conditions at each of five pressure-flow rate steps. The steps will consist of five flow rate measurements, nominally at pressures of 0.3, 0.6, 0.9, 0.6, and 0.3 MPa. If flow rates are high, the pressure range is reduced because of equipment limitations.

2. Borehole Deflectometer. The borehole deflectometer, Terrametrics Model PBD/TCD, operates on the principle that a sensor is traversed along a continuous tubing in the rock mass and an angle change record is made. The sensor consists of two straight fixed-length segments linked together with a strain-gage-based flexible connection. During a traverse, the flexible connection transmits a continuous signal that is the analog of the deflection angle between the two segments. The measurement principle is to traverse the boreholes before, during, and after the mining operations so that the cumulative angle distortion of the rock mass can be followed. In essence, an angle change profile is established.

Angle change measurements can be summed to provide displacements at selected points in the rock mass for each traverse. Comparisons of calculated displacements for mining stages provide an indication of the effects of excavation on the surrounding rock mass.

An essential facet of borehole deflectometer measurements is to ensure that the traverse path accurately reflects the rock mass movements. This is accomplished by inserting a special PVC tubing into each of the measurement boreholes. This tubing has four grooves that guide the deflectometer and form a permanent reference track that follows the small rock mass displacements.

3. Rod Extensometer. The rod extensometer is a hand-operated device used to measure drift convergence. The unit is manufactured by IRAD, Model RFR, and uses a sonic probe as the sensing unit. The sonic probe has a sensitivity of 0.025 mm. The rod extensometer is formed by precise length segments and has a measurement range of 0.6 m. The rod extensometer is designed to be removable. The sonic probe can be read remotely.

Special anchors are to be fabricated on MPBX heads so that cross-drift measurements, both vertical and horizontal, can be made at periodic intervals during the mining.

4. Hydraulic Pressure Cells. Terrametrics/Glotzl Concrete Stress Cells, Model B 10/20, are to be inserted in the concrete inserts. The principle of operation involves a sensing system, located in the pressure cell, that is isolated from the measurement system, which is connected to a hydraulic pump. The closed sensing system monitors the stress surrounding the pressure cell and converts this stress to hydraulic pressure on the cell. When a stress/pressure measurement is desired, a Terrametrics Model M1B16 pump is actuated and pressure in the measurement system is increased. A special bypass valve in the cell shifts the direction of flow so that the pressure

does not increase. At the attainment of this maximum pressure in the measurement system, the flow rate is reduced and a diaphragm in the cell closes at a pressure very near the pressure in the sensing system; thus, the stress is determined. The pressure cell can record stresses up to 30 MPa with a reported accuracy of ±10 kPa.

A factor in the use of hydraulic pressure cells is the hydraulic head caused by the fluid in the tubing connecting the pressure manifold and the pressure cells. Since the measurement objective is to record the changes in stress after the cell is in place, then the initial measurement at the time of installation includes the line hydraulic effects and further changes are attributed to stress behavior.

F. Data Acquisition System

1. Continuous. Data acquisition is designed around the HP 9845 desktop computer. Figure 6 shows that the DAS is located in two facilities in and around G-Tunnel. The underground portion is located in a 5-m^2 room excavated at the top of the Rock Mechanics Drift (Figure 1). Temperature is maintained at 20°C ±3° and the relative humidity can be maintained at 50% ±5%.

The companion room for the DAS is located in the G-Tunnel bunker near the tunnel portal, and can be accessed on a 24-hr basis should conditions warrant. The system is designed to allow control from either the instrumentation alcove or the bunker. This control includes making program changes and evaluating data that has been collected.

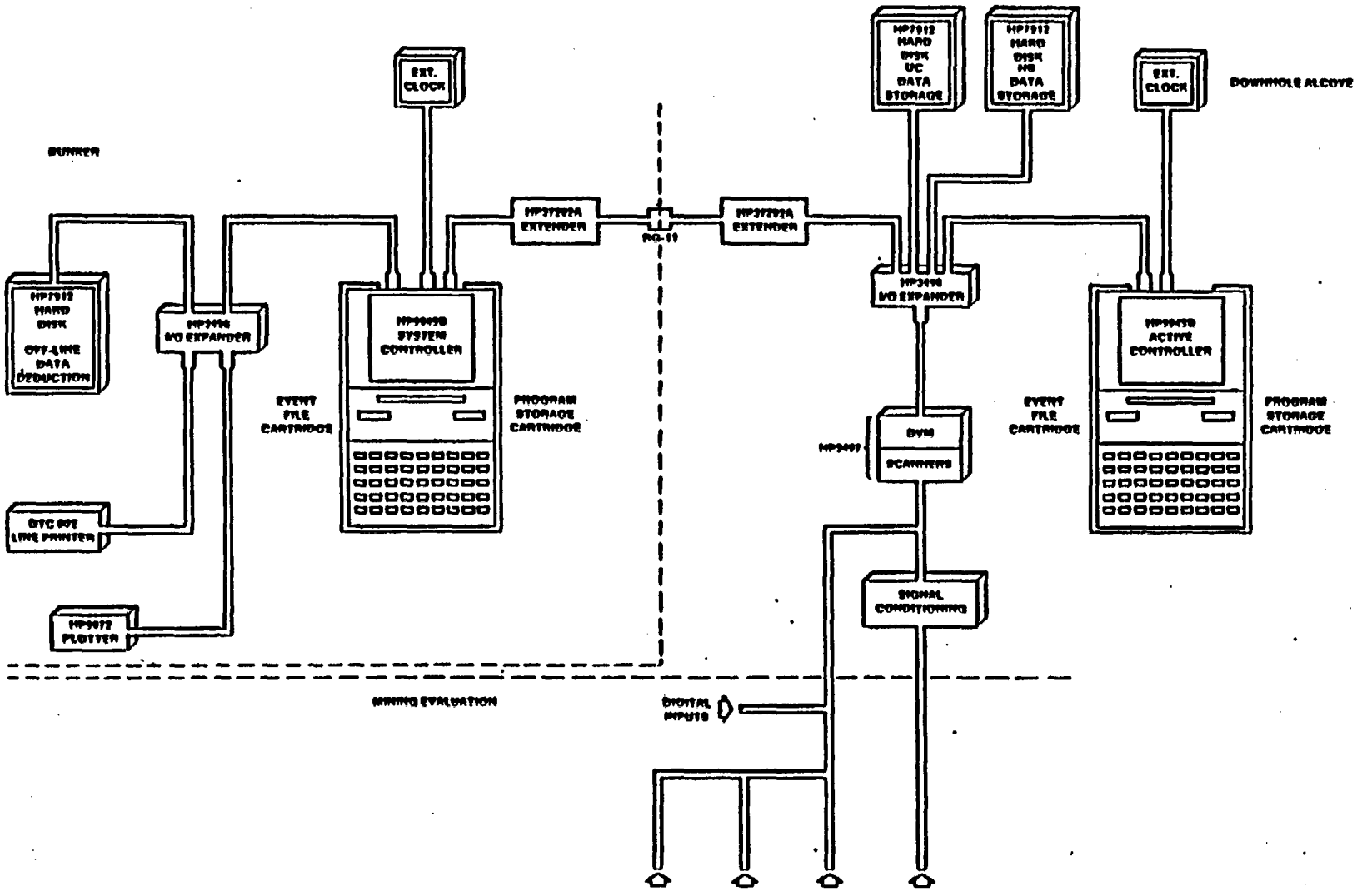

Figure 6. GTUF Data Acquisition System

The DAS is to be operated continuously over the duration of the evaluations, starting with the premining phase.

2. Discrete. Data for discrete measurements are recorded on special forms created for the specific measurements. These completed forms become part of the data record for the evaluations. Data are obtained on specific data recorders or readout devices for each of the measurements.

a. Permeability. Data for these measurements consist of test date, water temperature, location of test interval, size of measurement interval, injection pressure, flow rate, time interval for flow, and fracture descriptions. The latter are obtained from core logs and/or borescope investigations.

b. Borehole Deflectometer. The output for the borehole deflectometer is a continuous electrical signal that is the analog of the deflection angle between the two fixed length segments. The traverse will be sampled at intervals of not more than 0.2 m and data recorded to provide a continuous record of the traverse displacement normal to the borehole. The data collected will consist of traverse record, borehole used, test date, and equipment used.

c. Rod Extensometer. The IRAD Model MB-7 Sonic Probe Readout Box provides a digital display for sonic probe sensors and can be placed up to 183 m from the sonic probe without loss of accuracy. The data collected from rod extensometer measurements will consist of date, measurement location, number of segments in rod, temperature, identification of rod segments, serial number of readout box, and digital readout value.

d. Hydraulic Pressure Cell. The hydraulic pressure cells are connected to a manifold at the measurement station with pressure tubing. The manifold contains a valve arrangement so that pressure readings to individual cells can be controlled. The manifold is connected to the Terrametrics Model M1B16 electric motor-driven pump. The pump has an automatic flow rate regulator. The procedure is to pump oil into the system at a slow, timed rate. When cell bypass occurs, very slow pumping, at a delivery rate of less than 0.5 cm^3/mm, continues until there is no further increase in pressure. Normally, a pressure measurement takes 5 min. This pressure is then related to the stress on the hydraulic pressure cell. Data recorded are HPC identification and location, temperatures at cell and manifold, maximum pump pressure, and test date.

G. Instrumentation Calibration

Calibration of instruments and sensors falls into three categories: standards, fixture-dependent, and field. The first category refers to subjecting measurement sensors to calibration checks in the SNL calibration

lab. Items to be included are linear potentiometers and DC-LVDTs from the MPBXs; flowmeter and pressure gage for fracture permeability apparatus; the pressure pump for the HPCs; and all length calibration gages. These units are to be calibrated in SNL-approved calibration laboratories.

The second category refers to those efforts where a calibration device or fixture has to be fabricated to ensure that the expected measurement is accurate. Output from the sonic probe, used in MPBX and rod extensometer measurements, must be calibrated in a special fixture to ensure accuracy with the entire measurement system. This is accomplished by placing the probe in a fixture so that the sensing unit can be displaced a known amount and the readout quantity verified.

The borehole deflectometer is to be attached to a special rig so that the movement of one rigid segment can be accurately related to the other and electrical output is to be correlated with actual physical displacements of the segments to ensure measurement accuracy.

For example, rock bolt load cells are to be placed in special fixtures that can be placed in an SNL universal testing machine. Electrical output from RBLCs is to be correlated with actual force measurements. The electronics arrangement is to duplicate the data system used in the field.

The borehole stressmeter requires a block of welded tuff that can be cut into a 15-cm cube. The cube is to be cored with an AQ-size diamond bit so that the hole is centered in two parallel faces. The probe is to be inserted

in the hole and the entire assembly placed in a universal testing machine. The output from the sensor is to be correlated with the actual forces and converted stresses that result.

The final fixture that has to be fabricated is for the borehole permeability straddle packer unit. The basic fixture consists of a pipe having the same inside diameter as the borehole. The pipe is to have a perforated bypass interval that contains a pressure regulator. The water can flow through the bypass valve into a measuring tank. First, the straddle packer unit is to be inserted in the pipe away from the perforated region and the packers inflated to the design pressure. Water is to be pumped into the measurement interval so that the effective volume between the packers can be measured. Next, the straddle packer unit is to be placed at the bypass point and the packers reinflated. Pressure-flow rate measurements are to be run so that the hydraulic features of the piping can be factored into data reductions. The principal factor needed is the pressure loss between the pressure gage located on the surface and the actual pressure at the injection interval.

Field calibrations (third category) apply to the MPBIs that have linear potentiometers and DC-LVDTs. These instruments have built-in devices where the sensing units can be accurately displaced and the entire data system output checked for accuracy.

H. Laboratory Tests

Table 2 lists the laboratory tests to be performed on core samples. In addition, cores will be inspected by geologists and standard logs recorded.

Table 2

Laboratory Tests

Property	Test Conditions	Size Sample	Total Number
Porosity	Bulk and Connected	Irreg	6
Density	Bulk and Grain	Irreg	6
% Saturation		Irreg	3
Modulus of Elasticity	Ambient Temp, Saturated & Dry	NQ	18
Wave Velocities	Ambient Temp, Saturated & Dry	AX	18
Compressive Strength	Ambient Temp, Saturated & Dry Confining Stress of 0,10,20 MPa	NQ	18
Tensile Strength (Brazilian)	Ambient Temp, Saturated & Dry	NQ	18
Matrix Permeability	Ambient Temp, Continuing Stress of 0,10,20 MPa	NQ	9

IV. EXPERIMENT MANAGEMENT

A. Responsible Personnel

The following SNL personnel have major responsibilities in this experiment:

Roger M. Zimmerman, Principal Investigator

- Program Supervisor
- Contract Supervisor
- Modeling Supervisor
- Test Engineer

Robert L. Schuch

- Field Coordinator

Joe Bradshaw

- Instrumentation and Data System Installation
- Prepare and conduct Permeability Measurements

B. Schedule

Figure 7 is a PERT Chart listing the main activities associated with this evaluation. Relationships with NNWSI milestones are shown.

C. Documentation

The details associated with the planning of this effort are covered in this Test Plan. A final SAND report, a Level 2 NNWSI milestone, is to be written on the results of the measurements (Figure 7). Special evaluations pertinent to Exploratory Shaft testing will be reported as SNL Keystone documents. It is expected that there will be a number of papers submitted to technical and professional proceedings and journals covering various aspects of the evaluations as they unfold.

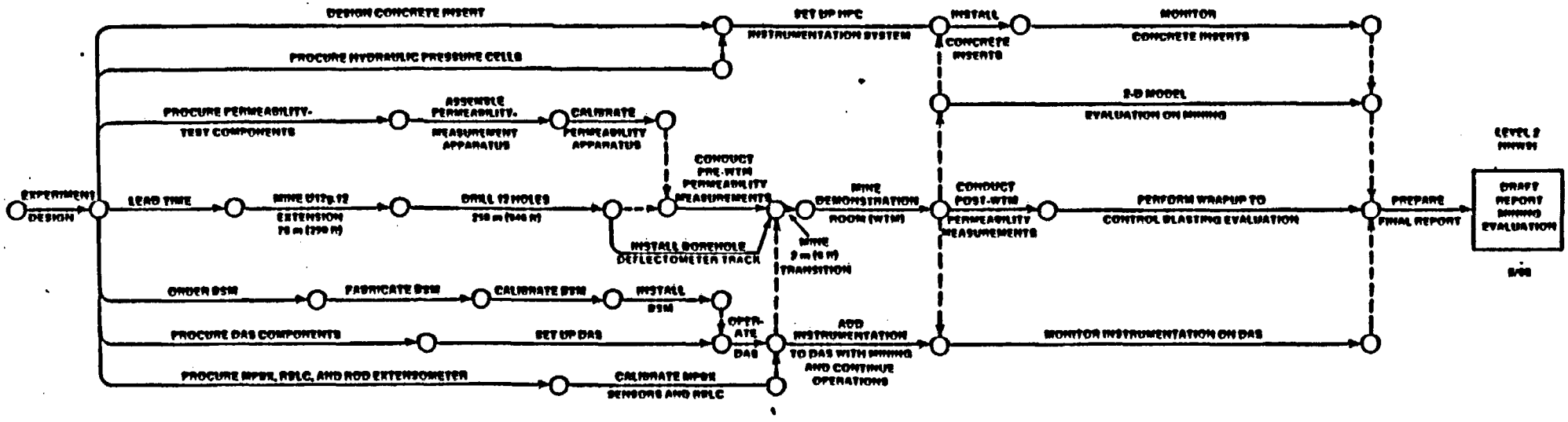

Figure 7. Mining Evaluation Planning Schedule

D. Quality Assurance (QA)

The mining evaluation in G-Tunnel is implemented under the SNL Organization 6000 QA Program Plan and is designated as a quality Level 3 effort (per QAP II-1). QA records for the overall effort shall consist, at a minimum, of the Test Plan; interim, topical, and final reports; and any peer review documentation. Decision-making telecon notes, conference notes, and trip reports, along with QA audits or surveys, shall be kept in the project working file. QA documents located in the project working file shall have copies placed in the NNWSI Central File.

Details associated with record keeping are:

1. Test Plan. The Test Plan is kept in SNL and SAI project offices and in the Instrumentation Alcove of the GTUF.

This Test Plan is a SNL Keystone Document and distribution of copies follows those procedures. As a minimum the completed Test Plan will be distributed to:

T. O. Hunter	6310	B. G. Edwards	7131
R. R. Richards	6310	R. J. Dye	7131
L. W. Scully	6311	J. S. Talbutt	7131
F. W. Bingham	6312	J. Schatz	SAIC
T. E. Blejwas	6313	W. E. Thompson	SAIC
R. M. Zimmerman	6313	R. R. Bellman	SAIC
R. L. Schuch	6313	D. Zerga	PBQ&D
F. B. Nimick	6313	M. Fowler	PBQ&D
B. M. Schwartz	6313	G. Fairer	USGS
D. Mason	6313	C. O. Denney	7125
J. R. Tillerson	6314	J. J. Bradshaw	7123
R. E. Stinebaugh	6314	D. Hembre	REECO
S. Sinnock	6315		
CF WBS 124212	6310		

After distribution, the copy kept in the Instrumentation Alcove in G-Tunnel will be the master copy. Any changes to the plan will be made in writing for approval by the principal investigator, division supervisor, and QA coordinator. Approved changes will be kept with the master copy and copies distributed to appropriate personnel.

2. Logbook. A DAS logbook is kept with the operating computer. Entries pertinent to the daily operations of the project are recorded here. The DAS logbook shall be maintained in accordance with EPI-XI-5.

3. Source Program, Data Files, and DAS Calibration Records. The source program is prepared in Albuquerque and stored on the computer there. A copy is placed on the computer in the GTUF in two forms. One copy is recorded on the hard disk, and the other is stored on the autostart cassette. The autostart program overrides any unauthorized change in the program at the G-Tunnel computer. Any changes in the program are coordinated with the data system programmer in Albuquerque and logged into the logbook in GTUF. As appropriate, new autostart cassettes are prepared in Albuquerque and transported to G-Tunnel for use. At the conclusion of testing, the source program is entered onto a tape cassette for permanent storage. This tape cassette becomes part of the NNWSICF.

All data are initially stored in the two hard disk units in the GTUF. Data are stored in raw and converted data files. Periodically, tape cassettes are made for all data stored in either of the files and these are transported to Albuquerque for data processing. These tapes are kept in temporary storage in Albuquerque and later, all raw and converted data are transferred to the permanent QA data tape cassette.

DAS calibration records are kept on floppy disks at the GTUF. They are updated as needed, and the new record becomes part of the regular data file. Therefore, there is a continual record of calibration changes for all computer constraints. Sensor calibration plans have been discussed in the instrumentation section. These calibration records are to be assembled and entered into the regular data file for the WTM evaluations.

4. Contractor Records. Field support contractors will have an approved QA file under the contract obligations. Pertinent records are to be transferred to SNL for permanent QA storage. These records include: (1) contractors will provide a record of details pertaining to the installation procedures and wiring of each of the instruments installed; (2) contractors will provide records of sensor and instrumentation calibrations; and (3) contractors will provide a record of activities pertaining to any troubleshooting required for instruments. The problems will be identified and solutions described.

5. Nonconformance Actions. In accordance with Quality Level 3, provisions any nonconformance reporting shall consist of identification of the nonconformance, the disposition, and the corrective action taken. These details will be entered into the WTM logbook.

E. Safety

Existing DOE Manual Chapters and NTS Service Organization Standard Operating Procedures will be applied to appropriate efforts.

V. EXPERIMENT EVALUATIONS

A. Objectives

The first objective for the mining evaluation is to review relevance of standard rock mass rating techniques for use in defining stabilization procedures for a repository-sized room in welded tuff.

The two rock mass rating systems have been briefly defined and referenced, i.e., CSIR[6] and Q-System.[7] The WTH will provide for a detailed application of these ratings for the purpose of developing a more accurate predictive model for welded tuff. A feature in the study is the application of these ratings to a cross-section shape that has not been previously constructed in welded tuff. The 6.1-m span is relatively large, and preliminary designs indicate that it can be stabilized with the standard rock bolts and wire mesh techniques commonly used on the NTS. If unstable conditions exist, either the drift convergence rates could be excessive (10.01 mm/day) or roof displacements could exceed 10 mm; then, rock bolt yield strengths could become important. The latter is highly unlikely in the time period under consideration in this evaluation. The rate effect is important for analyzing drift stability predictive models related to the rock mass rating systems.

The second objective is to "apply control blasting techniques in construction of a room in welded tuff for subsequent evaluations and recommendations for Exploratory Shaft efforts."

There are NNWSI requirements to develop techniques to control blasting and minimize blast damage in welded tuffs. This has never been seriously attempted in this particular medium. Part of the evaluation consists of the standard visual mining evaluations associated with drilling and blasting. These evaluations include time and motion studies required to accomplish the mining tasks. Also, measurements are made of the volume of rock excavated and the resulting cross-section size that is excavated. Part of the evaluation consists of a visual inspection and subjective evaluation of the blasting effects. These methods alone do not quantify and ensure the minimization of blast damage and the potential effects on creating preferential pathways for water migration. Thus, the permeability testing is added.

The permeability testing consists of the recording of permeability profiles before and after the blasting and relating the results to the known mining practices used. The permeability profiles are to be taken at three stations along the room, and different mining drilling patterns and blast techniques will have been used to enhance the evaluations. Emphasis will be on taking measurements within 2 m of the freshly exposed surfaces. An integral part of the evaluation will be the logging of the fractures in these intervals before and after blasting so that the permeability measurements can be analyzed better. Hydraulic quotients will be calculated for these intervals to determine the changes caused by blasting and drift surface relaxation phenomena. An output of the evaluations will be a recommendation as to the best of the mining methods to minimize blast damage.

The third objective, "measure and evaluate drift convergence phenomena for purposes of determining the responses of the welded tuff to mining," applies to the period of drift convergence prior to the placement of the rock bolts. The measurement techniques will be the same for the periods before and after rock bolting, but evaluations will be for different purposes. The emphasis in this objective is to design, perform, and evaluate measurement techniques during the mining phase so that possible measurement stability problems associated with blasting or muck removal can be ascertained. The measurements before and after the rock bolting support the Objective 1 evaluations.

There is always some drift convergence at the mining face due to the removal of the material preceding the face. In order to measure drift convergence during remaining mining operations, instrumentation has to be placed as close to the face as possible so that the remainder of the convergence can be measured. This means that timing and sequencing of measurements is essential. This also means that the instrumentation must be placed close to the face and must remain electronically stable and unaffected by the blasting. Successful measurements will require that the MPBX heads be installed so that they are protected.[17] Measurements taken before and after the blasts will provide the necessary documentation. In the event that one or more units is damaged, then procedures will be implemented to reinstall the measurement station. A result of the evaluations will be recommendations for performing the measurements successfully in the Exploratory Shaft.

The actual measurements will be related to elastic theories and the results of the numerical calculations in the next objective.

The fourth objective, "perform 2-D numerical model calculations of the repository-sized room and compare results with the measurements in objective (3) to determine reasons for any differences," relates to comparisons of field deformation measurements (MPBX and rod extensometer) with predicted values. Incorporated in the evaluations will be field-mapping of the joints so that they can be best represented in the models. One model uses statistical descriptions of joints,[21] and the other requires that joint sets have parallel joints but includes a more sophisticated joint shear model.[22] The first evaluation will be to assess which model has more promise for representing the joints. The next evaluation will be to assess whether the direct or inverse method will provide the best results.[14] The inverse method will be tried first because it has potential for being the most economical. If this is not found satisfactory, then the direct approach will be tried. The expected outcome is that the model experiment measurements can be brought to a minimum variation. If differences greater than 20 percent exist, then recommendations will be made as to possible:

1. improvements for models,
2. improvements for measurements, and
3. improvements of defining material properties.

The fifth objective is to "evaluate instrumentation installation techniques and resulting measurement results to improve measurement capabilities."

Deformation measurements efforts pertinent to Objective 4 relate to those techniques that apply during the mining period. This objective focuses on the instrumentation performances over a relatively short period of time. Sensors

are to be connected to the DAS, which requires the more elaborate calibration procedures. An activity within this objective will be an evaluation of the adequacies of the calibration techniques, and recommendations for improvements will be made as necessary. Instrumentation performance will be focused on how the sensor performed in relation to how it was expected to perform. Reasons for descrepancies will be offered and residual testing will be scheduled as necessary to ensure that the problems are defined properly.

The use of the borehole stressmeter is new in this application, and there is need to determine whether placement techniques are adequate and measurements reasonable. It is not expected that the BSM will provide data that can be checked accurately with the numerical calculations because stress measurements are highly dependent upon localized conditions in the surrounding rock.[24] It is hoped that the measurements will reflect meaningful trends and evaluations will be used to provide expected ranges for measurements in the Exploratory Shaft. Instrumentation durability will also be assessed.

The use of the borehole deflectometer will be a first in welded tuff and for this pre- and postmining application, and measurements results are somewhat uncertain. Comparisons of results with the numerical models will provide indications as to the accuracies. An expected recommendation is a statement as to whether use of the borehole deflectometer is feasible in hard rock, and if so, what procedures should be used for successful use in the future.

The emphasis in the application of the HPCs is to evaluate the installation and formability considerations. The HPCs will be monitored for a 30 day period to establish degree of uniformity in similar measurements and then we will extract them from the concrete inserts to assess the conditions of the HPCs. Output from this effort will be a recommendation for future use of these cells.

The sixth objective, "serve as a test facility for supplemental rock mechanics testing (i.e., plate-loading testing, possible demonstration of horizontal boring machine)," does not require an evaluation. The intent is to provide a facility with a DAS that can be used to monitor rock mass changes caused by other activities. The only evaluation expected is whether the measurement systems responded to what was expected and, if not, why.

B. Expected Results

The purpose of the mining evaluation activities is to conduct an evaluation of rock welded tuff behavior caused by the excavation of a relatively short room. Included with the excavation are a number of measurements designed to quantify the overall rock behavior. It is expected that evaluations will:

1. demonstrate technical feasibility of construction of this sized room in welded tuff,
2. result in recommendations for instrumentation and measurement techniques for Exploratory Shaft testing,
3. serve as a reference for future experiment/model evaluations for welded tuff,
4. enhance drift stability predictive models, and
5. quantify blast damage effects in welded tuff.

VI. REFERENCES

1. Nevada Nuclear Waste Storage Investigations; NVO-196-13. FY 1980 Project Plan and FY 1981 Forecast, Las Vegas, NV. February 1980.

2. Preliminary Design and Definition of Field Experiments for Tuff Rock Mechanics Program; R. M. Zimmerman. SAND81-1972, Sandia National Laboratories, Albuquerque, NM. June 1982.

3. Conceptual Design of Field Experiments for Tuff Rock Mechanics Program; by R. M. Zimmerman. SAND81-1768, Sandia National Laboratories, Albuquerque, NM. October 1982.

4. Evaluation of Tuff as a Medium for Nuclear Waste Repository, Interim Status Report on the Properties of Tuff; by J. K. Johnstone and K. Wolfsberg, eds., SAND80-1464, Sandia National Laboratories, Albuquerque, NM. July 1980.

5. Site Exploration for Rock-Mechanics Field Tests in the Grouse Canyon Member, Belted Range Tuff, U 12g Tunnel Complex, Nevada Test Site; by B. S. Langkopf and E. Eshom. SAND81-1897, Sandia National Laboratories, Albuquerque, NM. February 1982.

6. "Geomechanics Classification of Rock Masses and its Application in Tunneling," Z. T. Bieniawski, Proc. 3rd International Congress on Rock Mechanics, ISRM, Denver, CO., 1974.

7. "Estimation of Support Requirements for Underground Excavations," N. Barton, R. Lien, and J. Lunde, Proceedings 16th Symposium on Rock Mechanics, U. Minn., 1977.

8. NNWSI Issue Hierarchy. Site Characterization Plan. In prep.

9. Nuclear Regulatory Commission, 10 CFR Part 60. Disposal of High-Level Radioactive Wastes in Geologic Repositories: Technical Criteria. June 21, 1983.

10. Application of the Q-System in Design Decisions Concerning Dimension and Appropriate Support for Underground Installations." N. Barton, F. Loset, R. Lien, and J. Lunde, Subsurface Space, M. Bergman, ed., Vol. 2.

11. "Geotechnical Field Measurements, G-Tunnel, Nevada Test Site," R. M. Zimmerman and W. C. Vollendorf. SAND81-1971, Sandia National Laboratories, Albuquerque, NM. May 1982.

12. Monitoring the Behavior of Rock Tunnels During Construction, Z. T. Bieniawski and R. K. Maschek. The Civil Engineer in South Africa, Vol. 17, No. 9., 1975.

13. Measurement of Displacements in Tunnels, E. J. Cording. Proc. 2nd Congress IAEG, Braz Assoc. Engng. Geol., Sao Paulo.

14. "Some Aspects of 'Characterization' Problems in Geomechanics," A. Cividini, L. Jurina, and G. Gioda. Int. J. Rock Mech. Min. Sci. & Geomech. Abstr., Vol. 18, 1981.

15. Rock Testing Handbook, RTH 381-80 (U.S. Corps of Engineers, 1980).

16. "Analysis of Steady-State Hydraulic Tests in Fractured Rock," D. P. Hodgkinson, AERE-R 11287, DOE/RW/84.076, United Kingdom Atomic Energy Authority. Oxfordshire, UK, July 1984.

17. "Instrumentation and Evaluation of the 5191 Foot Level of the Silver Shaft, Mullan, Idaho," by N. Barton, K. Bakhtar, M. Khodarerdian, S. Woodhead, and D. Joss. TR 82-53-Terra Tek Report. July 1982.

18. "Rock Characterization Testing and Monitoring, ISRM Suggested Methods," E. T. Brown, editor, Pergamon Press, 1981.

19. "Rock Mass Classification of Candidate Repository Units at Yucca Mountain, Nye County, Nevada," B. S. Langkopf and P. F. Gnirk, SAND82-2034, Sandia National Laboratories. Albuquerque, NM. In prep.

20 "The Effect of Variations in the Geologic Data Base on Mining at Yucca Mountain for NNWSI," Dravo Engineers, Inc. SAND84-7125, Sandia National Laboratories. Albuquerque, NM.

21. "A Material Constitutive Model for Jointed Rock Mass Behavior," by R. K. Thomas. SAND80-1418, Sandia National Laboratories. Albuquerque, NM.

22. "Analysis of Stripa Full-Scale Heater Test," D. E. Maxwell and B. W. Dial, SAI-FR-221-1, Science Applications, Inc. San Leandro, CA. September 1981.

23. "Borehole Inclusion Stressmeter Measurements in Bedded Salt," by C. W. Cook and E. S. Ames. Proceedings 20th Symposium on Rock Mechanics. Austin, TX, 1979

24. "Back Analysis of Measured Displacements of Tunnels," by S. Sakarai and K. Takeuchi, Rock Mechanics and Rock Engineering, Vol. 16, No. 3, August 1983.