ANSI/ADA Specification No. 69 - 1991

American National Standard

AMERICAN NATIONAL STANDARD/AMERICAN DENTAL ASSOCIATION SPECIFICATION NO. 69*

DENTAL CERAMIC

Council on Dental Materials, Instruments and Equipment
American Dental Association
211 E. Chicago Avenue
Chicago, IL 60611

***ANSI/ADA Specification No. 69 - 1991. Approved May 10, 1991. Effective May 10, 1992.**

AMERICAN NATIONAL STANDARD/AMERICAN DENTAL ASSOCIATION SPECIFICATION NO. 69 FOR DENTAL CERAMIC

American Dental Association Specification No. 69 for Dental Ceramic has been approved by the Council on Dental Materials, Instruments and Equipment of the American Dental Association. This and other specifications for dental materials, instruments and equipment are being formulated by subcommittees of the Accredited Standards Committee MD156 for Dental Materials, Instruments and Equipment. The Council acts as administrative sponsor of that committee, which has representation from all interests in the United States in the standardization of materials, instruments and equipment in dentistry. The Council has adopted the specifications, showing professional recognition of their usefulness in dentistry, and has forwarded them to the American National Standards Institute with a recommendation that the specifications be approved as American National Standards. Approval of ADA specification No. 69 as an American National Standards was granted by the American National Standards Institute on May 10, 1991. This standard becomes effective May 10, 1992.

The Council thanks the subcommittee members and the organizations with which they were affiliated at the time the specification was developed: COL Steve Hondrum (Chairman), U.S. Army, Fort Meade, MD; David Grossman, Corning Glass Works, Corning, NY; Edward Hoffman (past Chairman), Lutherville, MD; Clyde Ingersoll, Ivoclar North America, Amherst, NY; Irving Klaus, Excelco International Inc., Deerfield Beach, FL; Caroline Kramer, Ceramco, Inc., Burlington, NJ; Ronald Kurzeja, Denpac Corporation, Hackensack, NJ; William O'Brien, University of Michigan, Ann Arbor; and Stephen Rasmussen, Case Western Reserve University, Cleveland, OH.

AMERICAN NATIONAL STANDARD/AMERICAN DENTAL ASSOCIATION SPECIFICATION NO. 69 FOR DENTAL CERAMIC

Foreword

(This foreword does not form part of Proposed ANSI/ADA Specification No. 69 for Dental Ceramic.)

Rationale

The ASC MD156 Subcommittee on Dental Porcelain reviewed ISO 6872, Dental Ceramic, with the intention of adopting it as the ANSI/ADA Specification No. 69. In reviewing ISO 6872, the Subcommittee has decided to suggest minor changes, additions and revisions to ISO 6872 as explained on the following pages.

The Subcommittee emphasizes that the standard test limits for dental ceramics are not lowered from those in ISO 6872.

The Subcommittee also emphasizes that this document is a foundation for later work, and will require further revision as new products become available and as the current revision of ISO 6872 by ISO/TC 106/SC2/WG1 progresses.

AMERICAN NATIONAL STANDARD/AMERICAN DENTAL ASSOCIATION SPECIFICATION NO. 69 FOR DENTAL CERAMIC

American Dental Association Specification No. 69 for Dental Ceramic has been approved by the Council on Dental Materials, Instruments and Equipment of the American Dental Association. This and other specifications for dental materials, instruments and equipment are being formulated by subcommittees of the Accredited Standards Committee MD156 for Dental Materials, Instruments and Equipment. The Council acts as administrative sponsor of that committee, which has representation from all interests in the United States in the standardization of materials, instruments and equipment in dentistry. The Council has adopted the specifications, showing professional recognition of their usefulness in dentistry, and has forwarded them to the American National Standards Institute with a recommendation that the specifications be approved as American National Standards. Approval of ADA specification No. 69 as an American National Standards was granted by the American National Standards Institute on May 10, 1991. This standard becomes effective May 10, 1992.

The Council thanks the subcommittee members and the organizations with which they were affiliated at the time the specification was developed: COL Steve Hondrum (Chairman), U.S. Army, Fort Meade, MD; David Grossman, Corning Glass Works, Corning, NY; Edward Hoffman (past Chairman), Lutherville, MD; Clyde Ingersoll, Ivoclar North America, Amherst, NY; Irving Klaus, Excelco International Inc., Deerfield Beach, FL; Caroline Kramer, Ceramco, Inc., Burlington, NJ; Ronald Kurzeja, Denpac Corporation, Hackensack, NJ; William O'Brien, University of Michigan, Ann Arbor; and Stephen Rasmussen, Case Western Reserve University, Cleveland, OH.

AMERICAN NATIONAL STANDARD/AMERICAN DENTAL ASSOCIATION SPECIFICATION NO. 69 FOR DENTAL CERAMIC

Foreword

(This foreword does not form part of Proposed ANSI/ADA Specification No. 69 for Dental Ceramic.)

Rationale

The ASC MD156 Subcommittee on Dental Porcelain reviewed ISO 6872, Dental Ceramic, with the intention of adopting it as the ANSI/ADA Specification No. 69. In reviewing ISO 6872, the Subcommittee has decided to suggest minor changes, additions and revisions to ISO 6872 as explained on the following pages.

The Subcommittee emphasizes that the standard test limits for dental ceramics are not lowered from those in ISO 6872.

The Subcommittee also emphasizes that this document is a foundation for later work, and will require further revision as new products become available and as the current revision of ISO 6872 by ISO/TC 106/SC2/WG1 progresses.

Specific rationale for changes from ISO 6872, Dental Ceramic Proposed ANSI/ADA Specification No. 69, Dental Ceramic

1 **Scope**

The wording is modified to include all types of ceramic restorations.

2 **References**

References include the following:
ANSI/ADA Document No. 41, Recommended Standard Practices for the Biological Evaluation for Dental Materials
ISO 6872-1984 (e), Dental Ceramic.

3 **Definitions**

Two definitions are omitted:

Type: Types are identified in clause 4 and defined as Sintered, Injection molded and Cast.
Pyroplasticity: This requirement is no longer included in the document. Definitions of ceramic types are added:
Cast ceramic: A type of ceramic material using the lost-wax technique.
Injection molded ceramic: A type of ceramic material/method in which a dental restoration is formed by heating and injecting a ceramic composition into a mold.
Sintered ceramic: A type of ceramic material/method in which the dental restoration is formed by heating, resulting in the densification and bonding of a finely divided powder.

4 **Types**

Types are redefined to include new dental ceramics/methods as determined by the method of processing, i.e., sintered, injection molded or cast.
Color coding is eliminated as unnecessary.

5 **Requirements**

5.2 Freedom from extraneous materials, irritants and toxic ingredients.
This Section is expanded to include the following:
Reference to maximum amounts of specific elements (lead, cadmium and arsenic).
Addition of fluorescing (radioactive) agents (ANSI/ADA Specification No. 52 for Uranium Content in Dental Porcelain and Porcelain Teeth has been withdrawn).
Reference to modelling fluid composition
Reference ANSI/ADA Specification No. 41.

5.4 **Properties**

Volumetric firing shrinkage is deleted as unnecessary considering that linear shrinkage is measured. The requirements for porosity and pyroplastic flow are deleted for the following reasons:

These properties are a function of technique rather than specific material.
There are not tests that objectively measure porosity and pyroplastic flow.

6 **Sampling**

This clause is rewritten to clarify the sampling procedure for ceramic powders and to insure that sufficient material is available to accomplish all tests.
Appropriate substitutes for the grid-type sample divider are included as the ISO apparatus is complicated and not commonly available in the United States.

8 **Test methods**

Instructions for mixing, vibration and firing are eliminated; specific dental ceramic materials are to be prepared for testing according to manufacturer's instructions, i.e., as they would be for construction of dental restorations.

8.3 **Flexural strength**

A reference to alternative methods of testing is included.
Dimensional tolerances are modified because ISO specifications are inappropriately tight and because test specimens are easily and accurately measured post-fractured.
Pass-fail criteria are clarified.

8.4 **Chemical solubility**

The apparatus will allow use of testing equipment commonly found in U.S. testing laboratories.
The number of samples to be tested is specified.
The gravimetric procedure is clarified to insure accuracy of measurement before and after the test.
The formula for percentage loss in mass is included.

8.5 **Resistance to staining**

The number of samples is increased.
The cleaning procedure is specified.

9 Packaging, marking and labelling

Manufacturer's batch identification will refer to date of manufacture.

In some sections of the Specification, the ISO Standard wording is changed to clarify meanings and to incorporate new types of ceramic materials.

AMERICAN NATIONAL STANDARD/AMERICAN DENTAL ASSOCIATION SPECIFICATION NO. 69 FOR DENTAL CERAMIC

1 SCOPE AND FIELD OF APPLICATION

This Standard specifies the requirements and the corresponding methods of testing for dental ceramics used for all-ceramic dental restorations.

2. REFERENCES

ISO 3696, Water for laboratory use - Specifications.

WHO, Specifications for the quality control of pharmaceutical preparations (second edition of the International Pharmacopoeia).

ANSI/ADA Document No. 41, Recommended Standard Practices for the Biological Evaluation for Dental Materials

ISO 6872-1984 (E), Dental ceramic.

Copies of ANSI/ADA Specifications may be obtained upon application to the American National Standards Institute, 11 West 42nd Street, NY, NY 10036.

3. DEFINITIONS

For the purpose of this Standard, the following definitions apply:

3.1 **Air-firing ceramic:** A dental ceramic to be fired under ambient atmospheric pressure.

3.2 **Cast ceramic:** A type of ceramic material/method in which the dental restoration is formed by melting and casting the material using the lost-wax technique.

3.3 **Condensation:** Any process by which an unfired dental ceramic is compacted.

3.4 **Core ceramic:** An opaque dental ceramic which provides a mechanically strong and suitably colored base for dentin ceramic.

3.5 **Dental ceramic:** A ceramic material used for dental restorations.

3.6 **Dentin/Body/Gingival ceramic:** A slightly translucent, pigmented dental ceramic used to give the overall shape and basic color of a ceramic restoration or prrosthesis.

3.7 **Degree of fusion:**

a) Opaque (core): The fusion attained when firing shrinkage is just complete.
b) Medium glaze: The fusion attained when the glaze is clinically and esthetically acceptable.

3.8 **Enamel/Incisal ceramic:** A translucent, lightly-pigmented dental ceramic used on a base of dentin ceramic to simulate the natural tooth enamel.

3.9 **Fusion range:**

a) Low fusing range: 1050°C.
b) Medium fusing range: 1050°C. to 1200°C.
c) High fusing range: 1200°C.

3.10 **Injection molded ceramic:** A type of ceramic material/method in which a dental restoration is formed by heating and injecting a ceramic composition into a mold.

3.11 **Lot:** Dental ceramic of the same class and type, but not necessarily of the same shade [see 9.2a)], from one manufacturer, and submitted at any one time for inspection and testing.

3.12 **Modelling fluid:** A liquid (other than water) with which a dental ceramic may be mixed prior to condensation.

3.13 **Sintered ceramic:** A type of ceramic material/method in which the dental restoration is formed by heating, resulting in the densification and bonding of a finely divided powder.

3.14 **Vacuum-firing ceramic:** A dental ceramic which is specially formulated for firing at much less that atmospheric pressure.

4 TYPES AND THEIR IDENTIFICATION

The type of ceramic will be determined by the method of processing, i.e., sintered, injection molded or cast.

5 REQUIREMENTS

5.1 Uniformity

The inorganic pigment(s) used to produce the fired color of a dental ceramic powder, and any dye(s), shall be uniformly dispersed throughout the dental ceramic, and no

segregation of the pigment(s) shall take place, as shown by visual inspection, clause 7.

5.2 **Freedom from extraneous materials, irritants and toxic ingredients**

5.2.1 Dental ceramic powders shall be free from extraneous materials, as shown by visual inspection, clause 7.

5.2.2 The manufacturer of the dental ceramic shall submit a certificate of assurance, including information on the test methods used and the results of the concentration determinations, that the content of elements in the dental ceramic powder is limited to the following maximum concentrations:

5.2.2.1	Lead	300 ppm
5.2.2.2	Cadmium	10 ppm
5.2.2.3	Arsenic	500 ppm

5.2.3 The manufacturer shall submit a certificate of assurance verifying that fluorescing agents which will increase the radioactivity of the ceramic have not been added.

5.2.4 The manufacturer of a modelling fluid shall submit biocompatibility data, or a certificate of assurance, including information on the test methods, results and conclusions, verifying that the modelling fluid does not pose a health hazard.

In addition, the modelling fluid bottle or package insert shall contain a warning that the ceramic brush should not be placed in the mouth.

5.2.5 To show biocompatibility, the manufacturer of the dental ceramic shall conform to ANSI/ADA Specification No. 41 for Recommended Standard Practices for the Biological Evaluation of Dental Materials.

5.3 **Mixing and condensation properties**

When mixed with water or a suitable modelling fluid, a dental ceramic powder shall not form lumps or granules as shown by visual inspection.

The paste so formed shall be suitable for the hand-building, by conventional laboratory techniques, of a dental ceramic restoration. When the paste is condensed, it shall not crack or crumble, as shown by visual inspection during the drying cycle recommended by the manufacturer.

5.4 Properties

The properties of ceramic test specimens tested in accordance with the relevant methods detailed in clause 8, shall comply with the requirements specified in Table 1.

Table 1

Properties

PROPERTY	REQUIREMENTS CLASS		
	Core	Dentin/Body/ Gingival	Enamel/ Incisal
Linear firing shrinkage, %, average, max.	16	16	16
Flexural strength, MPa, lower limit	100	55	50
Chemical solubility: loss in mass, %, max.	0.5	0.05	0.05
Resistance to staining: visible stains on any surface	Nil	Nil	Nil
NOTE - Linear firing shrinkage is a requirement only for sintered ceramics.			

5.5 Manufacturer's instructions

When so required by the purchaser, the dental ceramic shall be accompanied by instructions (supplied by the manufacturer) that include the following information:

a) a time-temperature cycle for drying a condensed ceramic;

b) a time-temperature cycle for the firing schedule (including the final temperature, the time it should be held and the rate of heating) and, in the case of a vacuum-fired ceramic, the level, duration and time of application of vacuum;

c) the glazing temperature;

d) powder/liquid ratio;

e) linear firing shrinkage, expressed as a percentage;

f) a warning regarding the potential health hazards presented by prolonged exposure to dusts containing a high concentration of quartz, cristobalite or other siliceous material(s).

6 Sampling

6.1 An amount of ceramic powder shall be procured for testing for compliance with this Specification:

a) Where there is more than one shade of a type of dental ceramic powder, take at least a 50 g sample of each shade.

b) Where there is only one shade of a type of dental ceramic powder, take four 50 g samples.

Form a pool of powder by taking samples of equal mass from each shade using a grid-type sample divider, a core sampler or similar apparatus. The total mass of the pool of powder shall be at least 200 g.

Sufficient quantities of essential modelling fluids should be obtained, if their use is recommended by the manufacturers. The quantities shall be those recommended by the manufacturer concerned.

6.2 For other than powdered ceramics, all of the material procured for testing in accordance with this Specification shall be of the same lot.

7 Inspection

Use visual inspection to examine the pool of powder taken in accordance with clause 6.

8 Test methods

8.1 Preparation of specimens

Samples will be prepared using the same processing method (i.e., sintered, injection molded or cast) employed for making dental restorations. Heat treatments and surface treatments, including the application of surface layers described in the manufacturer's instructions, shall be carried out before testing.

8.1.1 **Ambient conditions**

The preparation of test specimens, and all testing, shall be carried out at 23 ± 2°C.

NOTE - No special precautions need to be taken to control the humidity.

8.1.2 **Components of test specimens**

The liquid used in the preparation of test specimens shall be water that complies with the relevant requirements or Grade 3 water, ISO 3696, or, when applicable, the modelling fluid recommended by the manufacturer of a dental ceramic powder.

8.2 **Firing shrinkage**

Note - Firing shrinkage is a requirement only for sintered ceramics.

8.2.1 **Apparatus**

8.2.1.1 Mold as shown in Figure 1 and having a cavity of nominal size 25.0 mm x 6.0 mm x 3.0 mm.

8.2.1.2 Hand micrometer accurate to 0.01 mm.

8.2.2 **Preparation of test specimens**

Using material from the pool of powder (clause 6), and the mod (8.2.1.1), prepare 10 specimens according to manufacturer's instructions.

8.2.3 **Procedure**

Determine, to an accuracy of ± 0.01 mm, the dimensions of the following:

L_t - the length of each fired specimen, in millimeters;

L_m - the length of the cavity, in millimeters;

Retain the specimens for the test described in 8.3.

8.2.4 **Calculation and expression of results**

Calculate, using the relevant formula,

a) the linear firing shrinkage, LS, of each specimen, expressed as a percentage, as follows:

$$LS = [(L_m - L_s)/L_m] \times 100$$

b) the average linear firing shrinkage, i.e., the mean of the 10 individual results obtained in a) above.

8.3 **Flexural strength**

Alternative methods of testing will be permitted as long as the values obtained correlate with the three-point flexural strength requirements.

8.3.1 **Apparatus**

8.3.1.1 Equipment for the production, by grinding, of flat parallel-sided specimens

8.3.1.2 Flexural strength testing machine, having a span between bearers of 12 to 15mm, bearing surfaces of diameter 1.6 mm, and capable of a rate of application of force not exceeding 0.5 N/s.

8.3.2 **Preparation of test specimens**

Grind the 10 specimens used in 8.2.3 so as to produce rectangular test pieces of width 5.0 ± 0.25 mm, thickness 1.0 ± 0.1 mm and length at least 20 mm. Ensure that opposing faces of the test pieces are flat and parallel to within 0.05 mm over 20 mm.

Thoroughly clean the test pieces, ensuring that al traces of grinding debris are removed, and prepare them to a medium glaze degree of fusion. In the case of a core ceramic, fire the ground test pieces to the manufacturer's recommended firing schedule.

8.3.3 **Procedure**

Place a test piece centrally on the bearers of the testing machine so that the load is applied to a 5 mm wide face along a line perpendicular to the long axis of the test piece, and determine, to the nearest 0.1 N, the load required to break the test piece. Measure the cross-section dimensions, width and thickness, of each test piece to the nearest 0.01 mm at the point where fracture occurred. Repeat the procedure with the remaining test pieces retaining three large broken pieces for the test described in 8.5.

8.3.4 **Calculation and expression of results**

Calculate the flexural strength, M, in newtons per square millimeter (MPa), of each test piece, from the formula:

$$M = 3Wl/2bd^2$$

where

W is the load at failure in newtons;

l is the test span (center-to-center distance between bearers), in millimeters;

b is the width of the specimen, i.e., the dimension of the side at right angles to the direction of the applied load, in millimeters;

d is the thickness of the specimen, i.e., the dimension of the side parallel to the direction of the applied load, in millimeters.

At least seven of the ten test specimens shall meet the requirements stated in Table 1.

8.4 **Chemical solubility**

8.4.1 **Reagent**

Acetic acid (analytical grade), 4% (V/V) solution in distilled or demineralized water.

8.4.2 **Apparatus**

8.4.2.1 Mold as shown in Figure 2.

8.4.2.1 Mold as shown in Figure 2.

8.4.2.2 Reflux-condenser-type, three-piece extraction apparatus, as shown in Figure 3, or equivalent apparatus, consisting of the following:

a) a 125 ml flat-bottom, short-neck boiling flask with 24/40 joint;

b) an Allihn-type condenser with bulbs, tube ID 30 mm, and 34/45 joint at the end which fits the extraction tube;

c) a Soxhlet extraction tube with joint at each end. Bottom joint is 24/40 and top joint fits condenser (34/45 joint); and

d) clean, dry borosilicate glass extraction thimbles with fitted discs of coarse porosity 25 mm x 85 mm.

Commercial examples of the chemical solubility apparatus are listed in Table 2.

Table 2
The chemical solubility apparatus

	Kimble	Corning
Complete assembly	24005-30	3840 Complete
Condenser	24027-30	3840 Small
Flask	24055-125	4100-125
Extraction tube	24071-30	3740 Small
Thimble		33950 Small C

8.4.2.3 Balance accurate to 0.1 mg.

8.4.2.4 Drying oven, capable of being controlled at 150 ± 3°C.

8.4.3 **Preparation of test specimens**

Using material from the pool of powder (clause 6), and the mold (8.4.2.1), prepare three specimens (each with a mass of at least 5 g) as described in 8.1, firing them according to the manufacturer's instructions for the first build-up firing and the glaze firing of the material.

For materials other than sintered ceramics, prepare specimens according to manufacturer's instructions.

8.4.4 **Procedure**

Place each specimen separately in sintered, glass-bottomed thimbles [8.4.2.2d)]. Condition each thimble and specimen to constant weight (the nearest 0.1 mg) by storing at 150 ± 3°C (W_1). Place the thimble in the extraction apparatus [8.4.2.2 c)], and extract the specimens with the 4% acetic acid solution (8.4.1) by refluxing for 16 h. (Reflux rate 15 to 20 min. cycles.)

Wash the specimen (in the thimble) with distilled or demineralized water, discard the acetic acid and the wash, and again condition to constant weight (the nearest 0.1 mg) at 150 ± 3°C. Reweigh each specimen and thimble (W_2).

8.4.5 **Calculation and expression of results**

Calculate the percentage loss in mass of each specimen as follows:

$$\text{Percentage loss in mass} = [W_1 - W_2/W_1] \times 100$$

None of the three specimens shall exceed the values in Table 1.

8.5 **Resistance to staining**

8.5.1 **Staining solution**

A saturated solution of methylene blue in ethanol (ethanol 95% [V/V] [see WHO specification]).

8.5.2 **Apparatus**

A small vial of length approximately 20 mm and diameter approximately 10 mm.

8.5.3 **Preparation of test specimens**

Grind the glaze off a large face of the three pieces of broken flexural strength specimens retained from 8.3.3.

8.5.4 **Procedure**

Immerse the specimens (in the vial [8.5.1]) in the staining solution (8.5.1) for 24 h. Remove the specimens from the staining solution. Place them in an ultrasonic cleaner in clean methylated spirit for 15 s.

Examine all the outer surfaces for staining (without magnification).

9 Packaging, marking, and labelling

9.1 Packaging

Dental ceramic products shall be supplied in sealed containers that will not contaminate or permit contamination of the contents.

9.2 Marking and labelling

The following information shall be clearly marked on each container or on a label securely attached to the container:

a) the shade, as identified in the manufacturer's shade guide (if applicable);

b) the manufacturer's lot or batch identification based on the date of manufacture;

c) the minimum net mass, in grams, of the contained ceramic;

d) the manufacturer's name or brand name.

Dimensions in millimetres

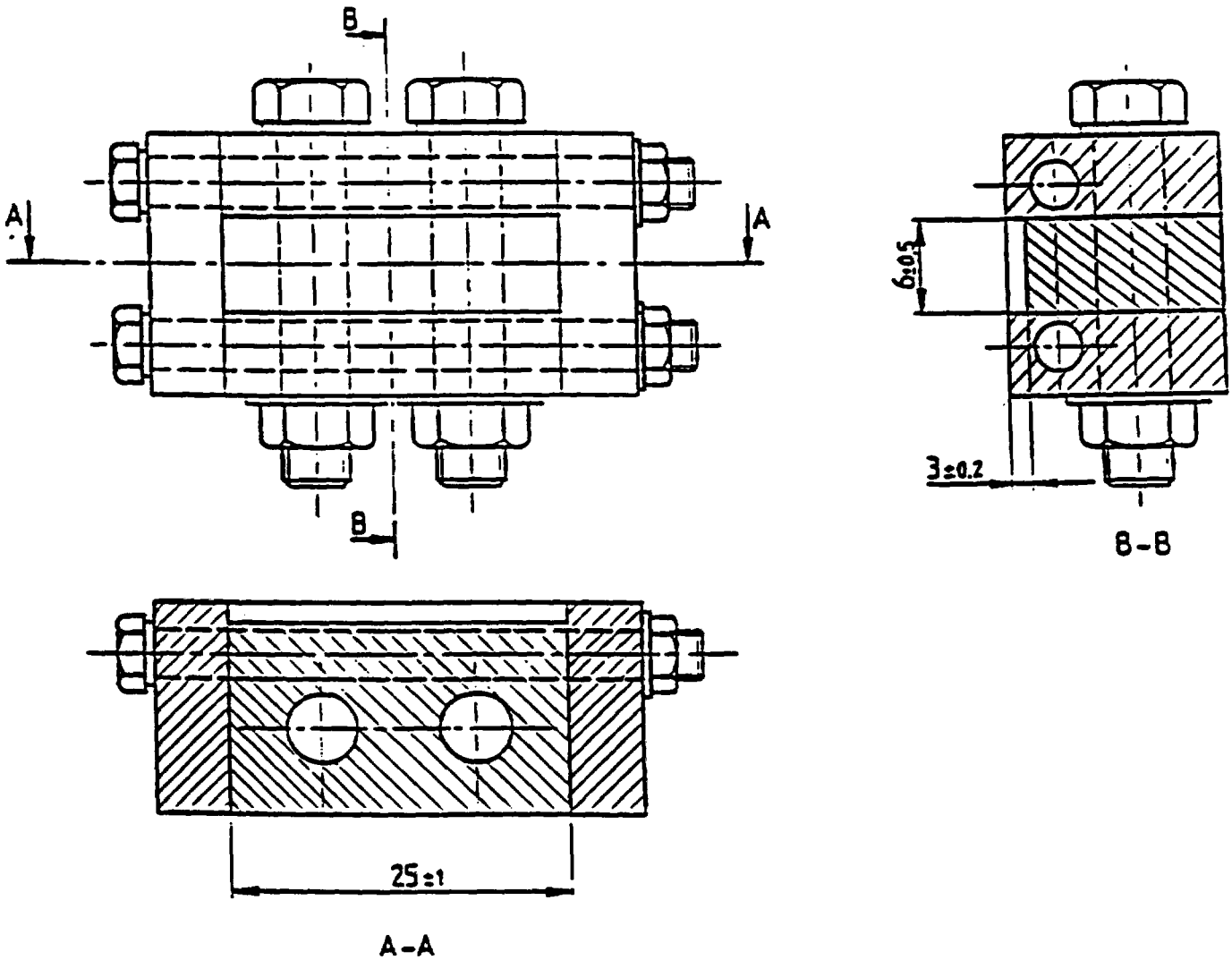

Figure 1. Mold (25.0 mm x 6.0 mm x 3.0 mm) for use in firing shrinkage and flexural strength tests.

Dimensions in millimetres

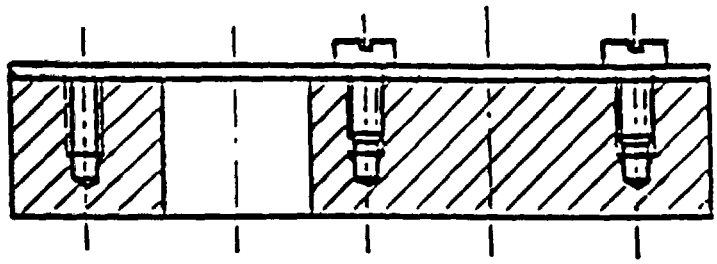

A–A

Materials : PMMA sheet
PTFE rod
Brass or steel screws

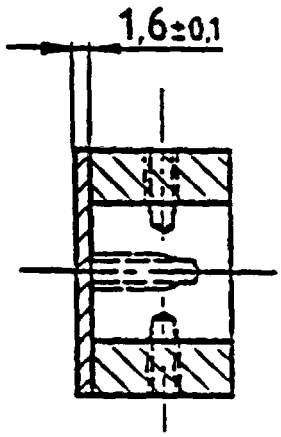

B–B

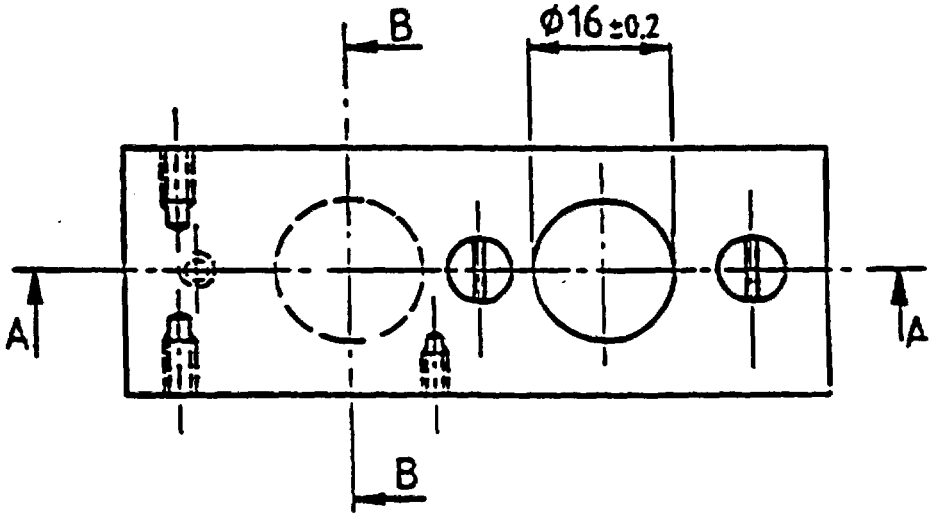

Figure 2. Mold 16.0 mm x 1.6 mm for use in chemical solubility tests.

Figure 3. Apparatus for chemical solubility test.