Tendon Instrumentation List

Labeling I D (name)	Azimuthal Angle (deg)	Vertical Elevation (in)	Radial Distance (in)	Transducer Designation	Location Drawing #	Details Drawing #	Basic Mark #	Modified Mark #	Comnts	Calibration
TL-M-I0-03	241	-46.0	218.0	HBM-C6-100t	D-SN-P-128		V37	V37		PreCal
TL-M-I0-05	253	-46.0	218.0	GK-3000-200-2.0	D-SN-P-128		V31	V31		PreCal
TL-M-J0-02	265	-46.0	218.0	GK-3000-200-2.0	D-SN-P-128		V25	V25		PreCal
TL-M-J0-04	277	-46.0	218.0	GK-3000-200-2.0	D-SN-P-128		V19	V19		PreCal
TL-M-K0-01	289	-46.0	218.0	GK-3000-200-2.0	D-SN-P-128		V13	V13		PreCal
TL-M-K0-03	301	-46.0	218.0	GK-3000-200-2.0	D-SN-P-128		V7	V7		PreCal
TL-M-K0-05	313	-46.0	218.0	GK-3000-200-2.0	D-SN-P-128		V1	V1		PreCal
TL-M-L0-02	325	-46.0	218.0	HBM-C6-100t	D-SN-P-128		V85	V85		PreCal
TL-M-L0-04	337	-46.0	218.0	GK-3000-200-2.0	D-SN-P-128		V79	V79		PreCal
TL-M-A0-01	349	-46.0	218.0	GK-3000-200-2.0	D-SN-P-128		V73	V73		PreCal
TL-C-D3-01	85	44.0	230.0	GK-3000-200-2.0	D-SN-P-128		H4	H4	Hoop	PreCal
TL-C-D3-02	95	41.0	230.0	GK-3000-200-2.0	D-SN-P-128		H4	H4	Load	PreCal
TL-C-D4-01	85	106.0	230.0	GK-3000-200-2.0	D-SN-P-128		H18	H18	Cells	PreCal
TL-C-D4-02	95	103.0	230.0	GK-3000-200-2.0	D-SN-P-128		H18	H18	90 Deg.	PreCal
TL-C-D5-01	85	159.0	230.0	GK-3000-200-2.0	D-SN-P-128		H30	H30		PreCal
TL-C-D5-02	95	156.0	230.0	GK-3000-200-2.0	D-SN-P-128		H30	H30		PreCal
TL-C-D5-03	85	203.0	230.0	GK-3000-200-2.0	D-SN-P-128		H40	H40		PreCal
TL-C-D5-04	95	200.0	230.0	GK-3000-200-2.0	D-SN-P-128		H40	H40		PreCal
TL-C-D6-01	85	230.0	230.0	GK-3000-200-2.0	D-SN-P-128		H46	H46		PreCal
TL-C-D6-02	95	227.0	230.0	GK-3000-200-2.0	D-SN-P-128		H46	H46		PreCal
TL-C-D7-01	85	283.0	230.0	GK-3000-200-2.0	D-SN-P-128		H58	H58		PreCal
TL-C-D7-02	95	280.0	230.0	GK-3000-200-2.0	D-SN-P-128		H58	H58		PreCal
TL-C-D8-01	85	327.0	230.0	HBM-C6-100t	D-SN-P-128		H68	H68		PreCal
TL-C-D8-02	95	324.0	230.0	HBM-C6-100t	D-SN-P-128		H68	H68		PreCal
TL-C-D9-01	85	389.0	230.0	GK-3000-200-2.0	D-SN-P-128		H82	H82		PreCal
TL-C-D9-02	95	386.0	230.0	GK-3000-200-2.0	D-SN-P-128		H82	H82		PreCal
TL-C-D10-01	85	481.0	230.0	GK-3000-200-2.0	D-SN-P-128		H96	H96		PreCal
TL-C-D10-02	95	478.0	230.0	GK-3000-200-2.0	D-SN-P-128		H96	H96		PreCal
TL-C-J3-01	265	75.0	230.0	GK-3000-200-2.0	D-SN-P-128		H11	H11	Hoop	PreCal
TL-C-J3-02	275	72.0	230.0	HBM-C6-100t	D-SN-P-128		H11	H11	Load	PreCal
TL-C-J4-01	265	137.0	230.0	GK-3000-200-2.0	D-SN-P-128		H25	H25	Cells	PreCal
TL-C-J4-02	275	134.0	230.0	GK-3000-200-2.0	D-SN-P-128		H25	H25	270 Deg	PreCal
TL-C-J5-01	265	181.0	230.0	HBM-C6-100t	D-SN-P-128		H35	H35		PreCal
TL-C-J5-02	275	178.0	230.0	HBM-C6-100t	D-SN-P-128		H35	H35		PreCal
TL-C-J6-01	265	261.0	230.0	HBM-C6-100t	D-SN-P-128		H53	H53		PreCal
TL-C-J6-02	275	258.0	230.0	GK-3000-200-2.0	D-SN-P-128		H53	H53		PreCal
TL-C-J7-01	265	305.0	230.0	GK-3000-200-2.0	D-SN-P-128		H63	H63		PreCal
TL-C-J7-02	275	302.0	230.0	GK-3000-200-2.0	D-SN-P-128		H63	H63		PreCal
TL-C-J7-03	265	323.0	230.0	HBM-C6-100t	D-SN-P-128		H67	H67		PreCal
TL-C-J7-04	275	320.0	230.0	HBM-C6-100t	D-SN-P-128		H67	H67		PreCal
TL-C-J8-01	265	358.0	230.0	GK-3000-200-2.0	D-SN-P-128		H75	H75		PreCal
TL-C-J8-02	275	355.0	230.0	GK-3000-200-2.0	D-SN-P-128		H75	H75		PreCal
TL-C-J9-01	265	420.0	230.0	GK-3000-200-2.0	D-SN-P-128		H89	H89		PreCal
TL-C-J9-02	275	417.0	230.0	GK-3000-200-2.0	D-SN-P-128		H89	H89		PreCal
TL-C-J10-01	265	543.0	230.0	GK-3000-200-2.0	D-SN-P-128		H103	H103		PreCal
TL-C-J10-02	275	540.0	230.0	GK-3000-200-2.0	D-SN-P-128		H103	H103		PreCal

NoCal - No calibration was performed on this instrument before or after model testing
PreCal - Calibration was preformed on this instrument prior to model testing only

Displacement Instrumentation List

Labeling I D (name)	Azimuthal Angle (deg)	Vertical Elevation (in)	Radial Distance (in)	Transducer Designation	Location Drawing #	Details Drawing #	Initial Offset	Modified Mark #	Comnts	Calibration
CP-M-B4-01	30	104.0	211.0	PT101-0002-111-1110	D-SN-P-131		+0.25	CPOT-2	CPOT	PostOK
CP-M-B9-01	30	423.0	211.0	PT101-0005-111-1110	D-SN-P-131		+0.5	CPOT-5	Vertical	PostOUT
CP-M-C5-01	66	178.0	200.0	PT101-0002-111-1110	D-SN-P-131		+0.25	CPOT-2	Disp.	PostOK
CP-M-D4-01	90	104.0	211.0	PT101-0002-111-1110	D-SN-P-131		+0.25	CPOT-2		PostOK
CP-M-D7-01	90	304.0	211.0	PT101-0002-111-1110	D-SN-P-131		+0.25	CPOT-2		PostOK
CP-M-D9-01	90	423.0	211.0	PT101-0002-111-1110	D-SN-P-131		+0.5	CPOT-2		PostOK
CP-M-D10-01	90	504.0	196.0	PT101-0002-111-1110	D-SN-P-131		+0.5	CPOT-2		PostOK
CP-M-D11-01	90	573.0	150.0	PT101-0005-111-1110	D-SN-P-131		+0.5	CPOT-5		PostOK
CP-M-D12-01	90	619.0	81.0	PT101-0015-111-1110	D-SN-P-131		+1	CPOT-15		PostOK
CP-M-Z4-01	135	104.0	211.0	PT101-0002-111-1110	D-SN-P-131		+0.25	CPOT-2		PostOK
CP-M-Z5-01	135	184.0	211.0	PT101-0002-111-1110	D-SN-P-131		+0.25	CPOT-2		PostOK
CP-M-Z7-01	135	304.0	211.0	PT101-0002-111-1110	D-SN-P-131		+0.25	CPOT-2		PostOK
CP-M-Z10-01	135	504.0	196.0	PT101-0002-111-1110	D-SN-P-131		+0.5	CPOT-2		PostOK
CP-M-Z12-01	135	619.0	81.0	PT101-0015-111-1110	D-SN-P-131		+1	CPOT-15		PostOK
CP-M-G4-01	180	104.0	211.0	PT101-0002-111-1110	D-SN-P-131		+0.25	CPOT-2		PostOK
CP-M-G9-01	180	423.0	211.0	PT101-0005-111-1110	D-SN-P-131		+0.5	CPOT-5		PostOUT
CP-M-I4-01	240	104.0	211.0	PT101-0002-111-1110	D-SN-P-131		+0.25	CPOT-2		PostOK
CP-M-I9-01	240	423.0	211.0	PT101-0002-111-1110	D-SN-P-131		+0.5	CPOT-2		PostOK
CP-M-I11-01	240	573.0	150.0	PT101-0005-111-1110	D-SN-P-131		+0.5	CPOT-5		PostOK
CP-M-L4-01	324	104.0	211.0	PT101-0002-111-1110	D-SN-P-131		+0.25	CPOT-2		PostOK
CP-M-L5-01	334	184.0	200.0	PT101-0002-111-1110	D-SN-P-131		+0.25	CPOT-2		PostOK
CP-M-L7-01	324	304.0	211.0	PT101-0002-111-1110	D-SN-P-131		+1.75	CPOT-2		PostOK
CP-M-L9-01	324	423.0	211.0	PT101-0005-111-1110	D-SN-P-131		+0.5	CPOT-5		PostOK
CP-M-L10-01	324	504.0	196.0	PT101-0002-111-1110	D-SN-P-131		+0.5	CPOT-2		PostOK
CP-M-L11-01	324	573.0	150.0	PT101-0005-111-1110	D-SN-P-131		+0.5	CPOT-5		PostOK
CP-M-L12-01	324	619.0	81.0	PT101-0015-111-1110	D-SN-P-131		+1	CPOT-15		PostOK
CP-R-B2-01	30	10.0	211.0	PT101-0002-111-1110	D-SN-P-131		+0.25	CPOT-2	CPOT	PostOK
CP-R-B3-01	30	56.0	211.0	PT101-0002-111-1110	D-SN-P-131		+0.25	CPOT-2	Radial	PostOK
CP-R-B5-01	30	184.0	211.0	PT101-0010-111-1110	D-SN-P-131		+0.5	CPOT-10	Disp.	PostOK
CP-R-B7-01	30	304.0	211.0	PT101-0010-111-1110	D-SN-P-131		+0.5	CPOT-10		PostOK
CP-R-B9-01	30	423.0	211.0	PT101-0005-111-1110	D-SN-P-131		+0.5	CPOT-5		PostOK
CP-R-C5-01	66	178.0	200.0	PT101-0010-111-1110	D-SN-P-131		+0.5	CPOT-10		PostOK
CP-R-D4-01	90	104.0	211.0	PT101-0002-111-1110	D-SN-P-131		+0.25	CPOT-2		PostOK
CP-R-D6-01	90	244.0	211.0	PT101-0010-111-1110	D-SN-P-131		+0.5	CPOT-10		PostOUT
CP-R-D8-01	90	363.0	211.0	PT101-0005-111-1110	D-SN-P-131		+0.5	CPOT-5		PostOK
CP-R-D9-01	90	423.0	211.0	PT101-0002-111-1110	D-SN-P-131		+0.25	CPOT-2		PostOK
CP-R-D10-01	90	504.0	196.0	PT101-0002-111-1110	D-SN-P-131		+0.25	CPOT-2		PostOK
CP-R-D11-01	90	573.0	150.0	PT101-0002-111-1110	D-SN-P-131		+0.25	CPOT-2		PostOK
CP-R-D12-01	90	619.0	81.0	PT101-0002-111-1110	D-SN-P-131		+0.25	CPOT-2		PostOK
CP-R-E5-01	120	184.0	211.0	PT101-0010-111-1110	D-SN-P-131		+0.5	CPOT-10		PostOK
CP-R-Z8-01	135	363.0	211.0	PT101-0005-111-1110	D-SN-P-131		+0.5	CPOT-5		PostOK
CP-R-Z10-01	135	504.0	196.0	PT101-0002-111-1110	D-SN-P-131		+0.25	CPOT-2		PostOK
CP-R-Z11-01	135	573.0	150.0	PT101-0002-111-1110	D-SN-P-131		+0.25	CPOT-2		PostOK
CP-R-Z12-01	135	619.0	81.0	PT101-0002-111-1110	D-SN-P-131		+0.25	CPOT-2		PostOK
CP-R-F5-01	150	184.0	211.0	PT101-0010-111-1110	D-SN-P-131		+0.5	CPOT-10		PostOK
CP-R-G2-01	180	10.0	211.0	PT101-0002-111-1110	D-SN-P-131		+0.25	CPOT-2		PostOK
CP-R-G3-01	180	56.0	211.0	PT101-0002-111-1110	D-SN-P-131		+0.25	CPOT-2		PostOK
CP-R-G4-01	180	104.0	211.0	PT101-0005-111-1110	D-SN-P-131		+0.5	CPOT-5		PostOK
CP-R-G7-01	180	304.0	211.0	PT101-0010-111-1110	D-SN-P-131		+0.5	CPOT-10		PostOK
CP-R-G9-01	180	423.0	211.0	PT101-0005-111-1110	D-SN-P-131		+0.5	CPOT-5		PostOUT
CP-R-H5-01	210	184.0	211.0	PT101-0010-111-1110	D-SN-P-131		+0.5	CPOT-10		PostOK
CP-R-I2-01	240	10.0	211.0	PT101-0002-111-1110	D-SN-P-131		+0.25	CPOT-2		PostOK
CP-R-I3-01	240	56.0	211.0	PT101-0002-111-1110	D-SN-P-131		+0.25	CPOT-2		PostOK
CP-R-I7-01	240	304.0	211.0	PT101-0010-111-1110	D-SN-P-131		+0.5	CPOT-10		PreCal
CP-R-I9-01	240	423.0	211.0	PT101-0005-111-1110	D-SN-P-131		+0.5	CPOT-5		PostOK
CP-R-I11-01	240	573.0	150.0	PT101-0002-111-1110	D-SN-P-131		+0.25	CPOT-2		PostOK

Displacement Instrumentation List

Labeling I D (name)	Azimuthal Angle (deg)	Vertical Elevation (in)	Radial Distance (in)	Transducer Designation	Location Drawing #	Details Drawing #	Initial Offset	Modified Mark #	Comnts	Calibration
CP-R-K5-01	300	184.0	211.0	PT101-0010-111-1110	D-SN-P-131		+0.5	CPOT-10		PostOK
CP-R-L4-01	324	104.0	211.0	PT101-0005-111-1110	D-SN-P-131		+0.5	CPOT-5		PostOK
CP-R-L5-01	334	184.0	200.0	PT101-0010-111-1110	D-SN-P-131		+0.5	CPOT-10		PostOK
CP-R-L6-01	324	244.0	211.0	PT101-0010-111-1110	D-SN-P-131		+0.5	CPOT-10		PostOK
CP-R-L8-01	324	363.0	211.0	PT101-0005-111-1110	D-SN-P-131		+0.5	CPOT-5		PostOK
CP-R-L10-01	324	504.0	196.0	PT101-0002-111-1110	D-SN-P-131		+0.25	CPOT-2		PostOK
CP-R-L11-01	324	573.0	150.0	PT101-0002-111-1110	D-SN-P-131		+0.25	CPOT-2		PostOK
CP-R-L12-01	324	619.0	81.0	PT101-0002-111-1110	D-SN-P-131		+0.25	CPOT-2		PostOK
DL-M-D0-01	90	-138.0	283.0	GCD-121-500	D-SN-P-131		-0.3	LVDT-1	LVDT	PostOK
DL-M-D1-01	90	0.0	283.0	GCD-121-2000-1283	D-SN-P-131		-1.5	LVDT-4	Outside	PostOK
DL-M-Z0-01	135	-138.0	283.0	GCD-121-500	D-SN-P-131		-0.3	LVDT-1	Vertical	PostOK
DL-M-Z1-01	135	0.0	283.0	GCD-121-2000-1283	D-SN-P-131		-1.5	LVDT-4	Disp.	PostOUT
DL-M-I0-01	240	-138.0	283.0	GCD-121-500	D-SN-P-131		-0.3	LVDT-1		PostOUT
DL-M-I1-01	240	0.0	283.0	GCD-121-2000-1283	D-SN-P-131		-1.5	LVDT-4		PreCal
DL-M-L0-01	324	-138.0	283.0	GCD-121-500	D-SN-P-131		-0.3	LVDT-1		PostOUT
DL-M-L1-01	324	0.0	283.0	GCD-121-2000-1283	D-SN-P-131		-1.5	LVDT-4		PostOUT
DL-R-D1-01	90	0.0	211.0	GCD-121-500	D-SN-P-131		-0.3	LVDT-1	LVDT	PostOUT
DL-R-D2-01	90	10.0	211.0	GCD-121-500	D-SN-P-131		-0.3	LVDT-1	Radial	PostOK
DL-R-D3-01	90	56.0	211.0	GCD-121-2000-1283	D-SN-P-131		-1.5	LVDT-4	Disp.	PostOUT
DL-R-Z1-01	135	0.0	211.0	GCD-121-500	D-SN-P-131		-0.3	LVDT-1		PostOUT
DL-R-Z2-01	135	10.0	211.0	GCD-121-500	D-SN-P-131		-0.3	LVDT-1		PostOK
DL-R-Z3-01	135	56.0	211.0	GCD-121-2000-1283	D-SN-P-131		-1.5	LVDT-4		PostOUT
DL-R-L1-01	324	0.0	211.0	GCD-121-500	D-SN-P-131		-0.3	LVDT-1		PostOK
DL-R-L2-01	324	10.0	211.0	GCD-121-500	D-SN-P-131		-0.3	LVDT-1		PostOK
DL-R-L3-01	324	56.0	211.0	GCD-121-2000-1283	D-SN-P-131		-1.5	LVDT-4		PostOUT
DL-M-C5-01	62	178.0	218.0	GCD-121-500	D-SN-P-131		-0.3	LVDT-1	LVDT	PostOUT
DL-C-C5-01	62	178.0	218.0	GCD-121-500	D-SN-P-131		-0.3	LVDT-1	Hatch	PostOK
DL-M-L5-01	324	184.0	218.0	GCD-121-2000-1283	D-SN-P-131		-1.5	LVDT-4	Diagonal	PostOK
DL-C-L5-01	324	184.0	218.0	GCD-121-2000-1283	D-SN-P-131		-1.5	LVDT-4	Disp.	PostOUT
DT-M-Z9-01	135	423.0	211.0	LSVD600U01001A0	D-SN-P-131		+1	TEMPO-10	Tempos.	PostOUT
DT-M-Z11-01	135	573.0	150.0	LSVD600U01001A0	D-SN-P-131		+1	TEMPO-10	Vertical	PostOUT
DT-M-Z13-01	-	635.0	0.0	LSVD600U01001A0	D-SN-P-131		+1	TEMPO-10	Disp.	PostOUT
DT-R-A5-01	0	184.0	211.0	LSVD600U01001A0	D-SN-P-131		+1	TEMPO-10	Tempos.	PostOK
DT-R-D5-01	90	184.0	211.0	LSVD600U01001A0	D-SN-P-131		+1	TEMPO-10	Radial	PostOUT
DT-R-D7-01	90	304.0	211.0	LSVD600U01001A0	D-SN-P-131		+1	TEMPO-10	Disp.	PostOUT
DT-R-Z4-01	135	104.0	211.0	LSVD600U01001A0	D-SN-P-131		+1	TEMPO-10		PostOUT
DT-R-Z5-01	135	184.0	211.0	LSVD600U01001A0	D-SN-P-131		+1	TEMPO-10		PostOK
DT-R-Z6-01	135	244.0	211.0	LSVD600U01001A0	D-SN-P-131		+1	TEMPO-10		PostOUT
DT-R-Z7-01	135	304.0	211.0	LSVD600U01001A0	D-SN-P-131		+1	TEMPO-10		PostOK
DT-R-Z9-01	135	423.0	211.0	LSVD600U01001A0	D-SN-P-131		+1	TEMPO-10		PostOK
DT-R-G5-01	180	184.0	211.0	LSVD600U01001A0	D-SN-P-131		+1	TEMPO-10		PostOK
DT-R-I5-01	240	184.0	211.0	LSVD600U01001A0	D-SN-P-131		+1	TEMPO-10		PostOK
DT-R-J5-01	270	184.0	211.0	LSVD600U01001A0	D-SN-P-131		+1	TEMPO-10		PostOK
DT-R-L7-01	324	304.0	211.0	LSVD600U01001A0	D-SN-P-131		+1	TEMPO-10		PostOUT
DT-R-L9-01	324	423.0	211.0	LSVD600U01001A0	D-SN-P-131		+1	TEMPO-10		PostOUT
CP-V-B3-01	30	50.0	200.0	PT101-0002-111-1110	N/A		+1	CPOT-2	Instr.	PostOK
CP-V-G3-01	180	50.0	200.0	PT101-0002-111-1110	N/A		+1	CPOT-2	Frame	PostOK
CP-V-Z11-01	-	570.0	0.0	PT101-0002-111-1110	N/A		+1	CPOT-2	Sens.	PostOK
CP-V-A9-01	9	390.0	130.0	PT101-0002-111-1110	N/A		+1	CPOT-2		PostOK
CP-V-D9-01	99	390.0	130.0	PT101-0002-111-1110	N/A		+1	CPOT-2		PostOK
CP-V-G9-01	189	390.0	130.0	PT101-0002-111-1110	N/A		+1	CPOT-2		PostOK
CP-V-J9-01	279	390.0	130.0	PT101-0002-111-1110	N/A		+1	CPOT-2		PostOK

Displacement Instrumentation List

Labeling I D (name)	Azimuthal Angle (deg)	Vertical Elevation (in)	Radial Distance (in)	Transducer Designation	Location Drawing #	Details Drawing #	Initial Offset	Modified Mark #	Comnts	Calibration
CP-H-G5-01	189	218.0	130.0	PT101-0002-111-1110	N/A		+1	CPOT-2		PostOUT
CP-H-J5-01	279	218.0	130.0	PT101-0002-111-1110	N/A		+1	CPOT-2		PostOK
CP-H-G9-01	189	380.0	130.0	PT101-0002-111-1110	N/A		+1	CPOT-2		PostOK
CP-H-J9-01	279	380.0	130.0	PT101-0002-111-1110	N/A		+1	CPOT-2		PostOK
IT-H-A11-01	0	580.0	10.0	SSY0140	N/A		+0	TILT		PostOUT
IT-H-D11-01	90	580.0	10.0	SSY0140	N/A		+0	TILT		PostOUT

PreCal - Calibration was preformed on this instrument prior to model testing only
PostOK - Calibration was performed on this instrument Before and After model testing and remained within tolerance
PostOUT - Calibration was performed on this instrument Before and After model testing and difference was Out-of Tolerance

Other Instrumentation List

Labeling I D (name)	Azimuthal Angle (deg)	Vertical Elevation (in)	Radial Distance (in)	Transducer Designation	Location Drawing #	Details Drawing #	Basic Mark #	Modified Mark #	Comnts	Calibration
TC-R-D0-01	90	-134.0	48.0	K-24-2-505	D-SN-P-132	N/A	N/A	N/A	(Thermoc.	NoCal
TC-R-D0-02	90	-104.0	48.0	K-24-2-505	D-SN-P-132	N/A	N/A	N/A	embedded	NoCal
TC-R-D0-03	90	-104.0	200.0	K-24-2-505	D-SN-P-132	N/A	N/A	N/A	basemat)	NoCal
TC-R-D0-04	90	-6.0	48.0	CASS-116U-240	D-SN-P-132	N/A	N/A	N/A		NoCal
TC-R-D0-05	90	-36.0	214.0	CASS-116U-240	D-SN-P-132	N/A	N/A	N/A		NoCal
TC-R-Z0-01	135	-36.0	214.0	CASS-116U-240	D-SN-P-132	N/A	N/A	N/A		NoCal
TW-R-A2-01	0	10.0	218.0	TQSS-116U-180	D-SN-P-132	N/A	N/A	N/A	(Thermoc.	NoCal
TW-R-A4-01	0	104.0	218.0	TQSS-116U-72	D-SN-P-132	N/A	N/A	N/A	embedded	NoCal
TW-R-A5-01	0	184.0	218.0	TQSS-116U-72	D-SN-P-132	N/A	N/A	N/A	cylinder	NoCal
TW-R-A5-02	349	184.0	218.0	TQSS-116U-72	D-SN-P-132	N/A	N/A	N/A	& dome)	NoCal
TW-R-A6-01	0	244.0	218.0	TQSS-116U-72	D-SN-P-132	N/A	N/A	N/A		NoCal
TW-R-A7-01	0	304.0	218.0	TQSS-116U-72	D-SN-P-132	N/A	N/A	N/A		NoCal
TW-R-A9-01	0	423.0	218.0	TQSS-116U-72	D-SN-P-132	N/A	N/A	N/A		NoCal
TW-R-A11-01	0	573.0	158.0	TQSS-116U-240	D-SN-P-132	N/A	N/A	N/A		NoCal
TW-R-C5-01	44	184.0	218.0	TQSS-116U-96	D-SN-P-132	N/A	N/A	N/A		NoCal
TW-R-C5-02	62	125.0	218.0	TQSS-116U-96	D-SN-P-132	N/A	N/A	N/A		NoCal
TW-R-C5-03	62	230.0	218.0	TQSS-116U-96	D-SN-P-132	N/A	N/A	N/A		NoCal
TW-R-C5-04	80	184.0	218.0	TQSS-116U-96	D-SN-P-132	N/A	N/A	N/A		NoCal
TW-R-D2-01	90	10.0	222.0	TQSS-116U-180	D-SN-P-132	N/A	N/A	N/A		NoCal
TW-R-D4-01	90	104.0	222.0	TQSS-116U-96	D-SN-P-132	N/A	N/A	N/A		NoCal
TW-R-D5-01	90	184.0	222.0	TQSS-116U-96	D-SN-P-132	N/A	N/A	N/A		NoCal
TW-R-D7-01	90	304.0	222.0	TQSS-116U-96	D-SN-P-132	N/A	N/A	N/A		NoCal
TW-R-D9-01	90	423.0	222.0	TQSS-116U-72	D-SN-P-132	N/A	N/A	N/A		NoCal
TW-R-D11-01	62	180.0	220.0	TQSS-116U-240	D-SN-P-132	N/A	N/A	N/A	A/L	NoCal
TW-R-Z2-01	135	10.0	218.0	TQSS-116U-180	D-SN-P-132	N/A	N/A	N/A		NoCal
TW-R-Z4-01	135	104.0	218.0	TQSS-116U-72	D-SN-P-132	N/A	N/A	N/A		NoCal
TW-R-Z5-01	135	184.0	218.0	TQSS-116U-96	D-SN-P-132	N/A	N/A	N/A		NoCal
TW-R-Z6-01	135	244.0	218.0	TQSS-116U-96	D-SN-P-132	N/A	N/A	N/A		NoCal
TW-R-Z7-01	135	304.0	218.0	TQSS-116U-96	D-SN-P-132	N/A	N/A	N/A		NoCal
TW-R-Z9-01	135	423.0	218.0	TQSS-116U-72	D-SN-P-132	N/A	N/A	N/A		NoCal
TW-R-Z11-01	135	573.0	158.0	TQSS-116U-240	D-SN-P-132	N/A	N/A	N/A		NoCal
TW-R-Z13-01	-	640.0	0.0	TQSS-116U-480	D-SN-P-132	N/A	N/A	N/A		NoCal
TW-R-G5-01	180	184.0	218.0	TQSS-116U-96	D-SN-P-132	N/A	N/A	N/A		NoCal
TW-R-I2-01	240	10.0	218.0	TQSS-116U-180	D-SN-P-132	N/A	N/A	N/A		NoCal
TW-R-I5-01	240	184.0	218.0	TQSS-116U-96	D-SN-P-132	N/A	N/A	N/A		NoCal
TW-R-I9-01	240	423.0	218.0	TQSS-116U-72	D-SN-P-132	N/A	N/A	N/A		NoCal
TW-R-I11-01	324	184.0	220.0	TQSS-116U-240	D-SN-P-132	N/A	N/A	N/A	E/H	NoCal
TW-R-K5-01	299	184.0	218.0	TQSS-116U-96	D-SN-P-132	N/A	N/A	N/A		NoCal
TW-R-L2-01	324	10.0	218.0	TQSS-116U-180	D-SN-P-132	N/A	N/A	N/A		NoCal
TW-R-L4-01	324	79.0	218.0	TQSS-116U-96	D-SN-P-132	N/A	N/A	N/A		NoCal
TW-R-L7-01	324	289.0	218.0	TQSS-116U-96	D-SN-P-132	N/A	N/A	N/A		NoCal
TW-R-L9-01	324	423.0	218.0	TQSS-116U-72	D-SN-P-132	N/A	N/A	N/A		NoCal
TW-R-L11-01	324	573.0	158.0	TQSS-116U-240	D-SN-P-132	N/A	N/A	N/A		NoCal
TI-C-A2-01	0	10.0	211.0	SA1-T	D-SN-P-132	N/A	N/A	N/A	(Thermoc.	NoCal
TI-C-A4-01	0	104.0	211.0	SA1-T	D-SN-P-132	N/A	N/A	N/A	attached	NoCal
TI-C-A5-01	0	184.0	211.0	SA1-T	D-SN-P-132	N/A	N/A	N/A	to inside	NoCal
TI-C-A7-01	0	304.0	211.0	SA1-T	D-SN-P-132	N/A	N/A	N/A	liner)	NoCal
TI-C-A9-01	0	423.0	211.0	SA1-T	D-SN-P-132	N/A	N/A	N/A		NoCal

C124

Other Instrumentation List

Labeling I D (name)	Azimuthal Angle (deg)	Vertical Elevation (in)	Radial Distance (in)	Transducer Designation	Location Drawing #	Details Drawing #	Basic Mark #	Modified Mark #	Comnts	Calibration
TI-C-A11-01	0	573.0	151.0	SA1-T	D-SN-P-132	N/A	N/A	N/A		NoCal
TI-C-C5-01	57	178.0	211.0	SA1-T	D-SN-P-132	N/A	N/A	N/A		NoCal
TI-C-C5-02	67	178.0	211.0	SA1-T	D-SN-P-132	N/A	N/A	N/A		NoCal
TI-C-D2-01	90	10.0	211.0	SA1-T	D-SN-P-132	N/A	N/A	N/A		NoCal
TI-C-D4-01	90	104.0	211.0	SA1-T	D-SN-P-132	N/A	N/A	N/A		NoCal
TI-C-D5-01	90	184.0	211.0	SA1-T	D-SN-P-132	N/A	N/A	N/A		NoCal
TI-C-D7-01	90	304.0	211.0	SA1-T	D-SN-P-132	N/A	N/A	N/A		NoCal
TI-C-D9-01	90	423.0	211.0	SA1-T	D-SN-P-132	N/A	N/A	N/A		NoCal
TI-C-D11-01	90	573.0	151.0	SA1-T	D-SN-P-132	N/A	N/A	N/A		NoCal
TI-C-Z2-01	135	10.0	211.0	SA1-T	D-SN-P-132	N/A	N/A	N/A		NoCal
TI-C-Z4-01	135	104.0	211.0	SA1-T	D-SN-P-132	N/A	N/A	N/A		NoCal
TI-C-Z5-01	135	184.0	211.0	SA1-T	D-SN-P-132	N/A	N/A	N/A		NoCal
TI-C-Z7-01	135	304.0	211.0	SA1-T	D-SN-P-132	N/A	N/A	N/A		NoCal
TI-C-Z9-01	135	423.0	211.0	SA1-T	D-SN-P-132	N/A	N/A	N/A		NoCal
TI-C-Z11-01	135	573.0	151.0	SA1-T	D-SN-P-132	N/A	N/A	N/A		NoCal
TI-C-Z13-01	-	634.0	0.0	SA1-T	D-SN-P-132	N/A	N/A	N/A		NoCal
TI-C-I2-01	240	10.0	211.0	SA1-T	D-SN-P-132	N/A	N/A	N/A		NoCal
TI-C-I5-01	240	184.0	211.0	SA1-T	D-SN-P-132	N/A	N/A	N/A		NoCal
TI-C-I9-01	240	423.0	211.0	SA1-T	D-SN-P-132	N/A	N/A	N/A		NoCal
TI-C-I11-01	240	573.0	151.0	SA1-T	D-SN-P-132	N/A	N/A	N/A		NoCal
TI-C-L2-01	324	10.0	211.0	SA1-T	D-SN-P-132	N/A	N/A	N/A		NoCal
TI-C-L4-01	324	104.0	211.0	SA1-T	D-SN-P-132	N/A	N/A	N/A		NoCal
TI-C-L5-01	324	184.0	211.0	SA1-T	D-SN-P-132	N/A	N/A	N/A		NoCal
TI-C-L5-02	314	184.0	211.0	SA1-T	D-SN-P-132	N/A	N/A	N/A		NoCal
TI-C-L5-03	334	184.0	211.0	SA1-T	D-SN-P-132	N/A	N/A	N/A		NoCal
TI-C-L7-01	324	304.0	211.0	SA1-T	D-SN-P-132	N/A	N/A	N/A		NoCal
TI-C-L9-01	324	423.0	211.0	SA1-T	D-SN-P-132	N/A	N/A	N/A		NoCal
TI-C-L11-01	324	573.0	151.0	SA1-T	D-SN-P-132	N/A	N/A	N/A		NoCal
RT-M-A3-01	0	40.0	150.0	RTD-805	D-SN-P-132	N/A	N/A	N/A	(RTD	NoCal
RT-M-A5-01	0	170.0	150.0	RTD-805	D-SN-P-132	N/A	N/A	N/A	inside	NoCal
RT-M-A7-01	0	290.0	150.0	RTD-805	D-SN-P-132	N/A	N/A	N/A	air	NoCal
RT-M-A9-01	0	423.0	150.0	RTD-805	D-SN-P-132	N/A	N/A	N/A	Temp.)	NoCal
RT-M-A10-01	0	533.0	120.0	RTD-805	D-SN-P-132	N/A	N/A	N/A		NoCal
RT-M-D3-01	90	40.0	150.0	RTD-805	D-SN-P-132	N/A	N/A	N/A		NoCal
RT-M-D5-01	90	170.0	150.0	RTD-805	D-SN-P-132	N/A	N/A	N/A		NoCal
RT-M-D7-01	90	290.0	150.0	RTD-805	D-SN-P-132	N/A	N/A	N/A		NoCal
RT-M-D9-01	90	423.0	150.0	RTD-805	D-SN-P-132	N/A	N/A	N/A		NoCal
RT-M-D10-01	90	533.0	120.0	RTD-805	D-SN-P-132	N/A	N/A	N/A		NoCal
RT-M-Z12-01	-	608.0	0.0	RTD-805	D-SN-P-132	N/A	N/A	N/A		NoCal
RT-M-G3-01	180	40.0	150.0	RTD-805	D-SN-P-132	N/A	N/A	N/A		NoCal
RT-M-G5-01	180	170.0	150.0	RTD-805	D-SN-P-132	N/A	N/A	N/A		NoCal
RT-M-G7-01	180	290.0	150.0	RTD-805	D-SN-P-132	N/A	N/A	N/A		NoCal
RT-M-G9-01	180	423.0	150.0	RTD-805	D-SN-P-132	N/A	N/A	N/A		NoCal
RT-M-G10-01	180	533.0	120.0	RTD-805	D-SN-P-132	N/A	N/A	N/A		NoCal
RT-M-J3-01	270	40.0	150.0	RTD-805	D-SN-P-132	N/A	N/A	N/A		NoCal
RT-M-J5-01	270	170.0	150.0	RTD-805	D-SN-P-132	N/A	N/A	N/A		NoCal
RT-M-J7-01	270	290.0	150.0	RTD-805	D-SN-P-132	N/A	N/A	N/A		NoCal
RT-M-J9-01	270	423.0	150.0	RTD-805	D-SN-P-132	N/A	N/A	N/A		NoCal

C125

Other Instrumentation List

Labeling I D (name)	Azimuthal Angle (deg)	Vertical Elevation (in)	Radial Distance (in)	Transducer Designation	Location Drawing #	Details Drawing #	Basic Mark #	Modified Mark #	Comnts	Calibration
RT-M-J10-01	270	533.0	120.0	RTD-805	D-SN-P-132	N/A	N/A	N/A		NoCal
RT-R-G0-01	180	-60.0	400.0	RTD-805	D-SN-P-132	N/A	N/A	N/A	Outside	NoCal
PG-R-G4-01	180	96.5	230.0	4040	N/A	N/A	N/A	N/A	(pressure	PostOK
PG-R-G4-02	180	96.5	230.0	4040	N/A	N/A	N/A	N/A	gages)	PostOK
CE-M-Z2-01	135	10.0	214.0	SOFO-500	D-SN-P-125	N/A	684	684	(fiber	NoCal
CE-M-Z2-02	135	10.0	221.0	SOFO-500	D-SN-P-126	N/A	683	683	optic	NoCal
CE-M-A6-01	0	244.0	214.0	SOFO-500	D-SN-P-125	N/A	682	682	concrete	NoCal
CE-C-A6-01	0	244.0	218.0	SOFO-500	D-SN-P-125	N/A	737	737	strain	NoCal
CE-M-A6-02	0	244.0	221.0	SOFO-500	D-SN-P-126	N/A	738	738	gages)	NoCal
CE-C-Z6-01	135	244.0	214.0	SOFO-500	D-SN-P-125	N/A	685	685		NoCal
CE-M-Z6-01	135	244.0	218.0	SOFO-500	D-SN-P-125	N/A	686	686		NoCal
CE-C-Z6-02	135	244.0	221.0	SOFO-500	D-SN-P-126	N/A	687	687		NoCal
CE-M-Z11-01	135	573.0	157.0	SOFO-500	D-SN-P-125	N/A	775	775		NoCal
CE-C-Z11-01	135	573.0	157.0	SOFO-500	D-SN-P-125	N/A	776	776		NoCal
A00	0	423.0	224.0						Acoustic	PreCal
A01	0	304.0	224.0						Sensors	PreCal
A02	0	184.0	224.0						(Ext)	PreCal
A03	0	10.0	224.0							PreCal
A04	0	-79.0	206.0							PreCal
A05	62	423.0	224.0							PreCal
A06	62	304.0	224.0							PreCal
A07	60	10.0	224.0							PreCal
A08	60	-79.0	206.0							PreCal
A09	90	580.0	170.0							PreCal
A10	90	423.0	230.0							PreCal
A11	90	244.0	230.0							PreCal
A12	90	127.0	230.0							PreCal
A13	90	10.0	230.0							PreCal
A14	120	-79.0	206.0							PreCal
A15	150	423.0	224.0							PreCal
A16	150	304.0	224.0							PreCal
A17	150	184.0	224.0							PreCal
A18	150	10.0	224.0							PreCal
A19	180	644.0	0.0							PreCal
A20	180	184.0	224.0							PreCal
A21	180	10.0	224.0							PreCal
A22	180	-79.0	206.0							PreCal
A23	210	423.0	224.0							PreCal
A24	210	304.0	224.0							PreCal
A25	210	184.0	224.0							PreCal
A26	210	10.0	224.0							PreCal
A27	240	-79.0	206.0							PreCal
A28	270	580.0	170.0							PreCal
A29	270	423.0	230.0							PreCal
A30	270	244.0	230.0							PreCal
A31	270	127.0	230.0							PreCal
A32	270	10.0	230.0							PreCal
A33	285	304.0	224.0							PreCal
A34	285	56.0	224.0							PreCal
A35	300	-79.0	206.0							PreCal
A36	318	423.0	224.0							PreCal
A37	324	10.0	224.0							PreCal
A38	15	10.0	211.0						Acoustic	PreCal

C126

Other Instrumentation List

Labeling	Azimuthal	Vertical	Radial	Transducer	Location	Details	Basic	Modified	Comnts	Calibration
I D	Angle	Elevation	Distance	Designation	Drawing #	Drawing #	Mark #	Mark #		
(name)	(deg)	(in)	(in)							
A39	57.1	196.0	205.0						Sensors	PreCal
A40	62	10.0	211.0						(Int)	PreCal
A41	66.9	196.0	205.0							PreCal
A42	105	10.0	211.0							PreCal
A43	150	244.0	211.0							PreCal
A44	150	10.0	211.0							PreCal
A45	210	244.0	211.0							PreCal
A46	210	10.0	211.0							PreCal
A47	240	10.0	211.0							PreCal
A48	295	10.0	211.0							PreCal
A49	313.7	222.0	200.0							PreCal
A50	313.7	146.0	200.0							PreCal
A51	334.3	222.0	200.0							PreCal
A52	334.3	146.0	200.0							PreCal
A53	330	10.0	211.0							PreCal

NoCal - No calibration was performed on this instrument before or after model testing
PreCal - Calibration was preformed on this instrument prior to model testing only
PostOK - Calibration was performed on this instrument Before and After model testing and remained within tolerance

Appendix E: PCCV Instrumentation Layout Drawings

List of PCCV Instrumentation Layout Drawings

Number	Date	Rev	Description
D-SN-P-125	1/31/2001	1	Strain Gage Layout – Inner Rebar Layer
D-SN-P-126	1/31/2001	1	Strain Gage Layout – Outer Rebar Layers
D-SN-P-127	7/20/1999	0	Strain Gage Layout – Basemat Rebar
D-SN-P-128	1/31/2001	1	Strain Gage Layout – Tendons
D-SN-P-129	1/31/2002	1	Strain Gage Layout – Exterior Liner
D-SN-P-130	1/31/2002	1	Strain Gage Layout – Interior Liner
D-SN-P-131	1/31/2002	1	Displacement Transducer Layout
D-SN-P-132	1/31/2002	0	Temperature Sensor Layout
D-SN-P-133	1/31/2002	0	Displacement Transducer Fixtures
D-SN-P-206	7/20/1999	1	Instrumentation Liner Details – Gauges Installation Details
D-SN-P-207	7/20/1999	1	Instrumentation Liner Details – Basemat Liner Connection
D-SN-P-208	7/20/1999	1	Instrumentation Liner Details – Basemat Liner Connection
D-SN-P-209	7/20/1999	1	Instrumentation Liner Details – Detail a & b
D-SN-P-210	7/20/1999	1	Instrumentation Liner Details – Detail d
D-SN-P-211	7/20/1999	1	Instrumentation Liner Details – Detail e
D-SN-P-212	7/20/1999	1	Instrumentation Liner Details – Detail f
D-SN-P-213	7/20/1999	1	Instrumentation Liner Details – Detail g & h
D-SN-P-214	7/20/1999	1	Instrumentation Liner Details – Detail i & j
D-SN-P-215	7/20/1999	1	Instrumentation Liner Details – Detail k & l
D-SN-P-216	7/20/1999	1	Instrumentation Liner Details – Detail m
D-SN-P-217	7/20/1999	1	Instrumentation Liner Details – Detail n
D-SN-P-218	7/20/1999	0	Interior Liner Gage Layout – Equipment Hatch
D-SN-P-219	1/31/2001	1	Interior Liner Gage Layout – Airlock
D-SN-P-220	36360	0	Interior Liner Gage Layout – Main Steam and Feedwater

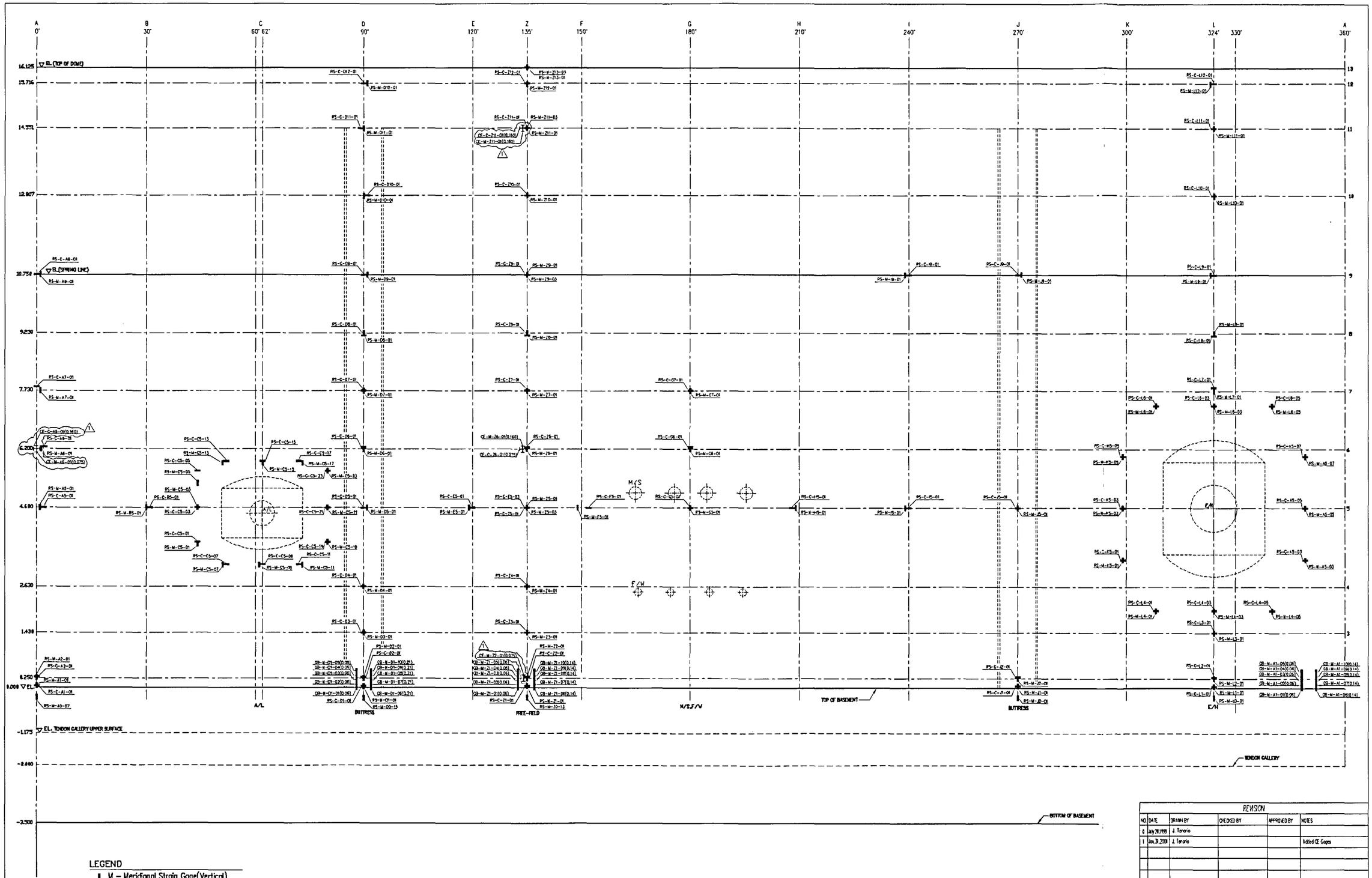

LEGEND

- M – Meridional Strain Gage(Vertical)
- C – Circumferential Strain Gage (Hoop)
- CE– Embedded Concrete Fiber Optic Strain Gage
- ( ) – Dimension shown after ID is Distance from Liner in Meters

INNER REBAR - VIEW FROM INSIDE

REVISION

NO.	DATE	DRAWN BY	CHECKED BY	APPROVED BY	NOTES
0	July 28,1999	J. Tenorio			
1	Jan. 31,2001	J. Tenorio			Added CE Gages

NUPEC/NRC PCCV STRUCTURAL BEHAVIOR TEST MODEL

DRAWING NO.		SCALE
D-SN-P-125	STRAIN GAGE LAYOUT INNER REBAR LAYER	N.T.S.

SANDIA NATIONAL LABORATORIES FACILITIES ENGINEERING
ALBUQUERQUE, NEW MEXICO; LIVERMORE, CALIFORNIA; TONOPAH, NEVADA

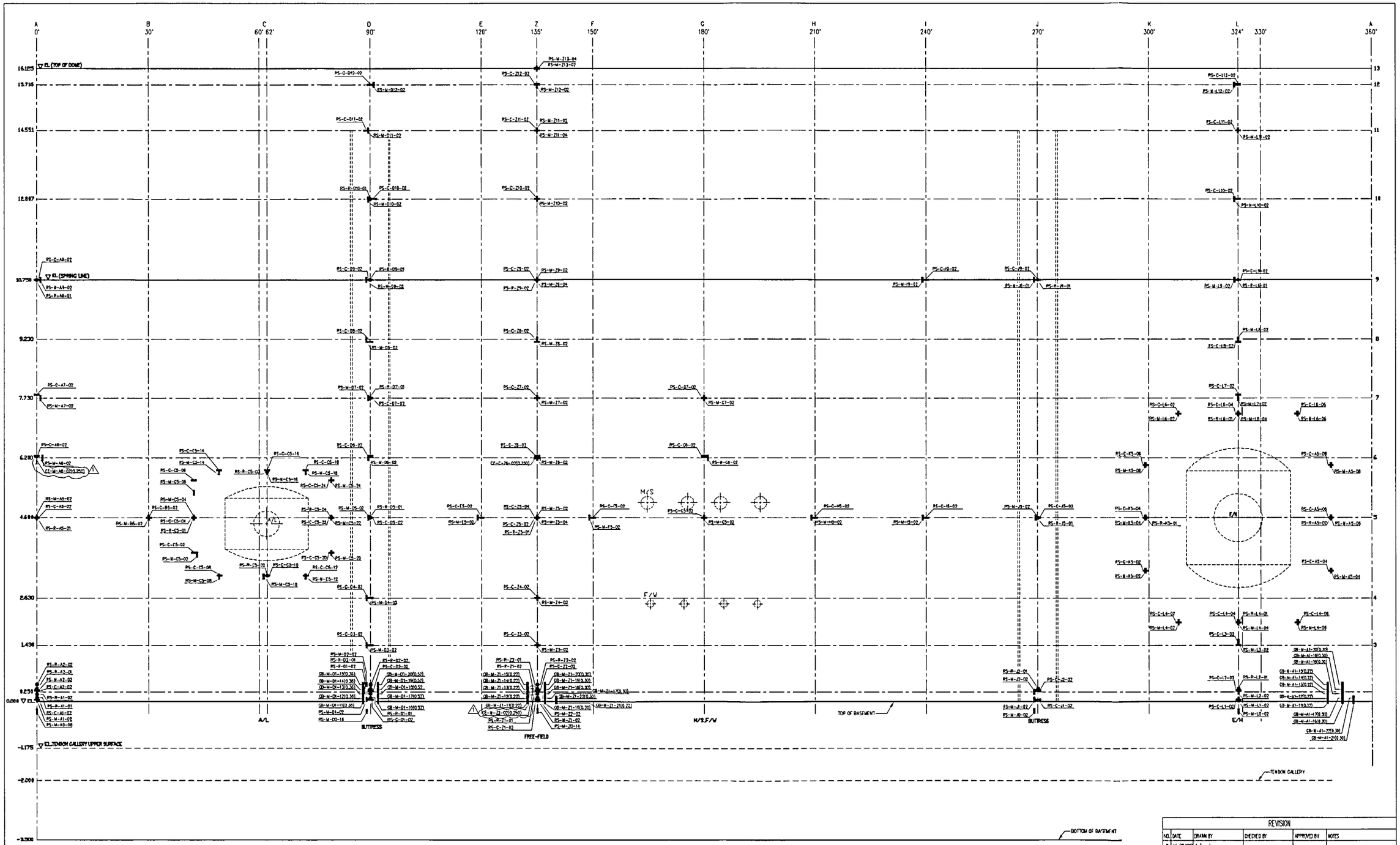

LEGEND

- M – Meridional Strain Gage(Vertical)
- C – Circumferential Strain Gage (Hoop)
- R – Radial Strain Gage (Shear Tie)
- CE– Embedded Concrete Fiber Optic Strain Gage
- ( ) – Dimension shown after ID is Distance from liner in Meters

OUTER REBAR – VIEW FROM INSIDE

REVISION

NO.	DATE	DRAWN BY	CHECKED BY	APPROVED BY	NOTES
0	July 20,1999	J. Tenorio			
1	Jan.30,2001	J. Tenorio			Added CE Gages

NUPEC/NRC PCCV STRUCTURAL BEHAVIOR TEST MODEL

DRAWING NO. D-SN-P-128

STRAIN GAGE LAYOUT
OUTER REBAR LAYER

SCALE N.T.S

SANDIA NATIONAL LABORATORIES FACILITIES ENGINEERING
ALBUQUERQUE, NEW MEXICO; LIVERMORE, CALIFORNIA; TONOPAH, NEVADA

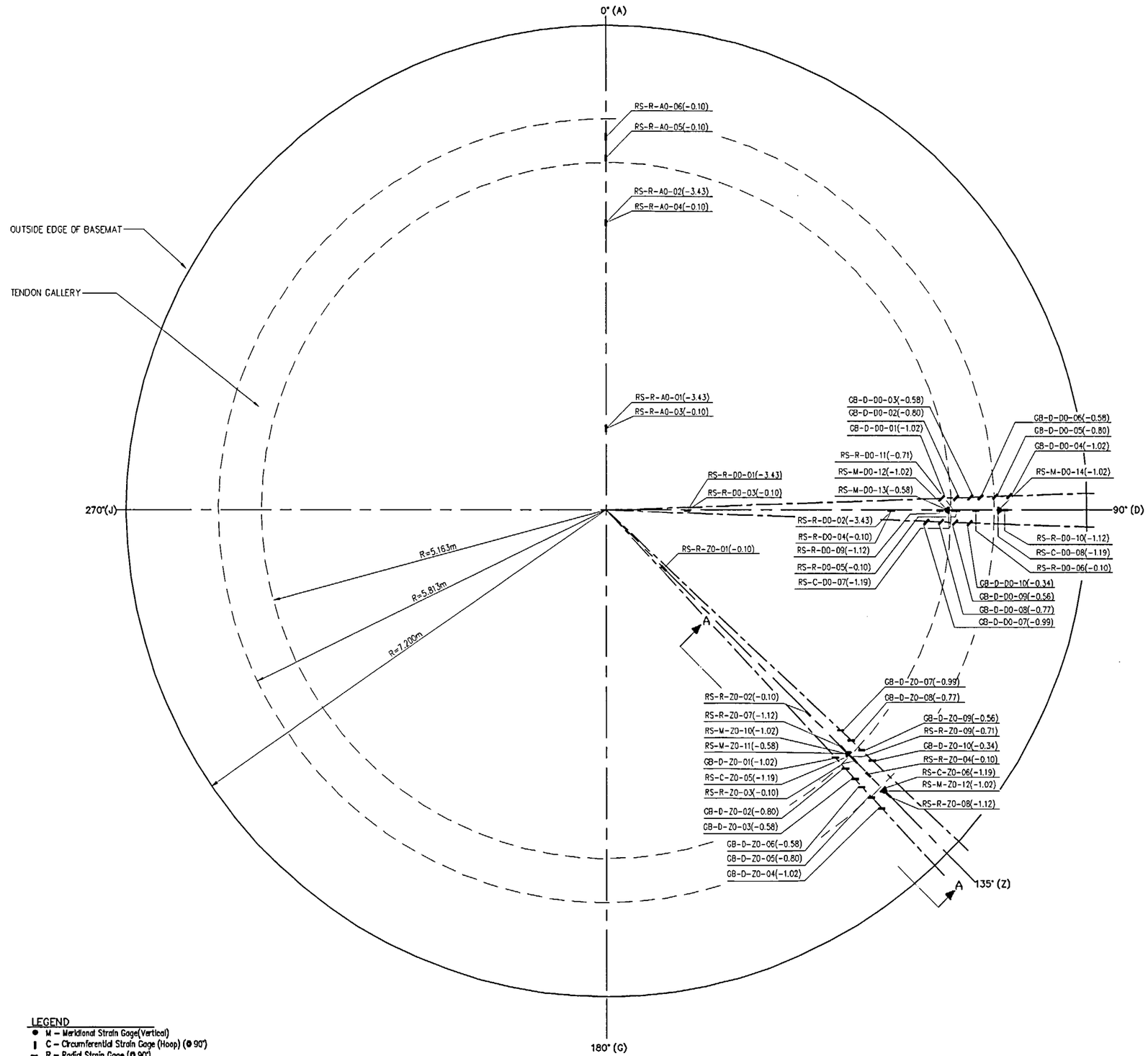

BASEMENT REBAR – VIEW FROM ABOVE

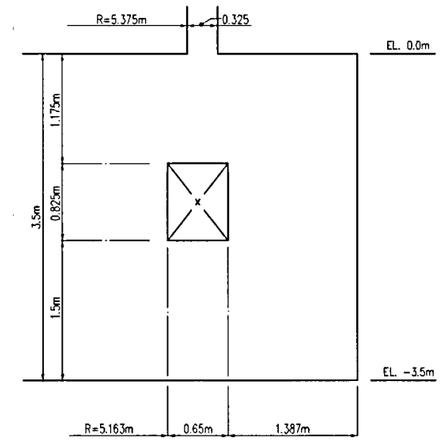

A-A SECTION
SCALE - 1/24

NOTE
VERTICAL ELEVATION SHOWN IN PARENTHESES (m).
0.0 ELEVATION IS TOP OF BASEMAT

LEGEND
- M – Meridional Strain Gage(Vertical)
- C – Circumferential Strain Gage (Hoop) (@ 90°)
- R – Radial Strain Gage (@ 90°)
- D – Diagonal Gage Bar Strain Gage (@ 90°)

REVISION					
NO.	DATE	DRAWN BY	CHECKED BY	APPROVED BY	NOTES
0	July 20,1999	J. Tenorio			

NUPEC/NRC PCCV STRUCTURAL BEHAVIOR TEST MODEL

DRAWING NO.		SCALE
D-SN-P-127	STRAIN GAGE LAYOUT BASEMENT REBAR	1/24

SANDIA NATIONAL LABORATORIES FACILITIES ENGINEERING
ALBUQUERQUE, NEW MEXICO; LIVERMORE, CALIFORNIA; TONOPAH, NEVADA

FILE NAME: Basemat Rebar Locations

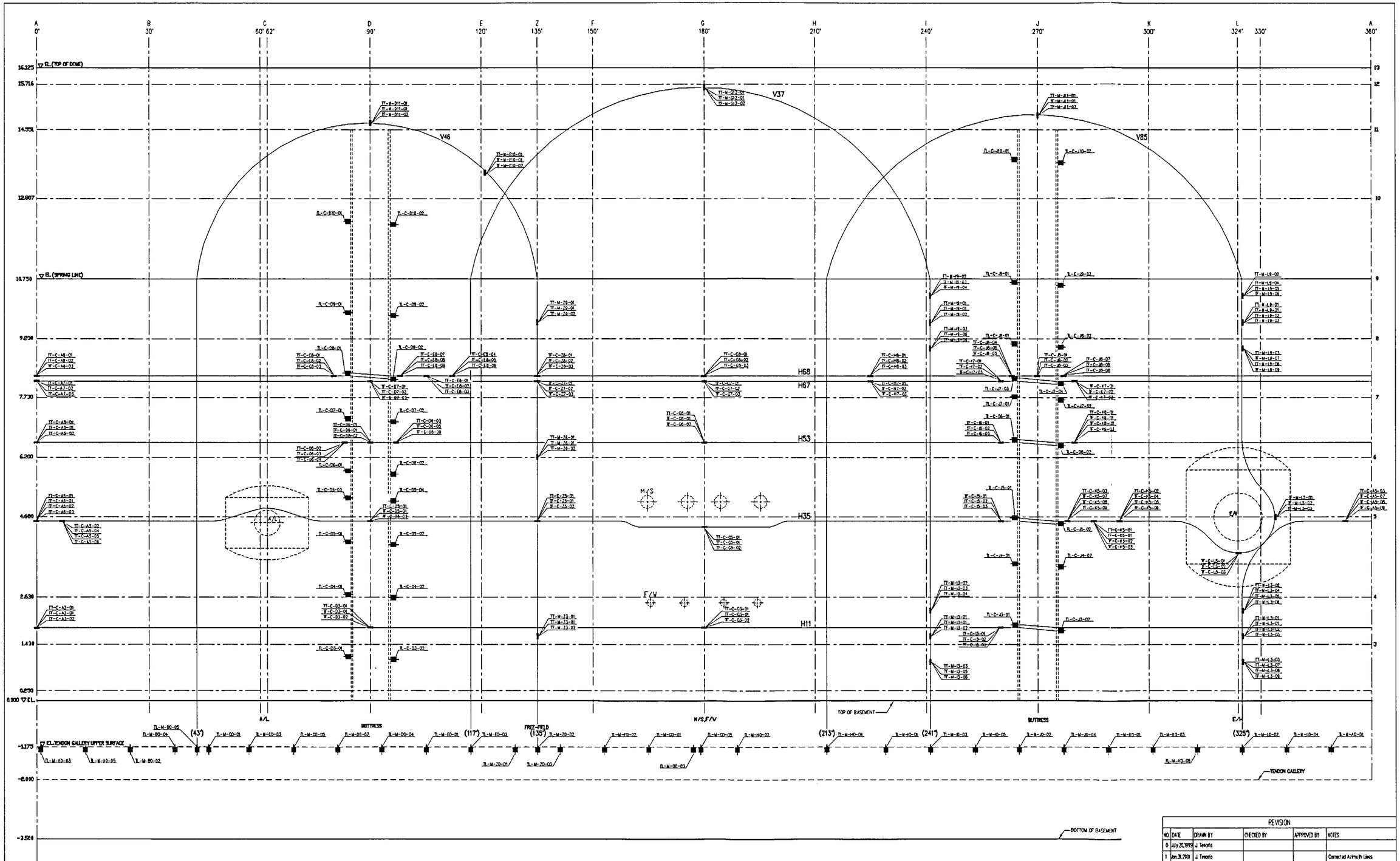

LEGEND

- M – Meridional (Hairpin) Tendon Strain Gage Location
- C – Circumferential (Hoop) Tendon Strain Gage Location
- M – Meridional (Hairpin) Load Cell
- C – Circumferential (Hoop) Load Cell

NOTE: If 3 Locations are close on same tendon: All 3 Tendon Strands are instrumented. Otherwise, only the #1 strand is instrumented.

STRAIN GAGES AND LOAD CELLS ON TENDONS – VIEW FROM INSIDE

REVISION

NO.	DATE	DRAWN BY	CHECKED BY	APPROVED BY	NOTES
0	July 20,1999	J. Teixeira			
1	Jan.31,2001	J. Teixeira			Corrected Azimuth Lines

NUPEC/NRC PCCV STRUCTURAL BEHAVIOR TEST MODEL

DRAWING NO.		SCALE
D-SN-P-128	STRAIN GAGE LAYOUT TENDONS	N.T.S

SANDIA NATIONAL LABORATORIES FACILITIES ENGINEERING
ALBUQUERQUE, NEW MEXICO; LIVERMORE, CALIFORNIA; TONOPAH, NEVADA

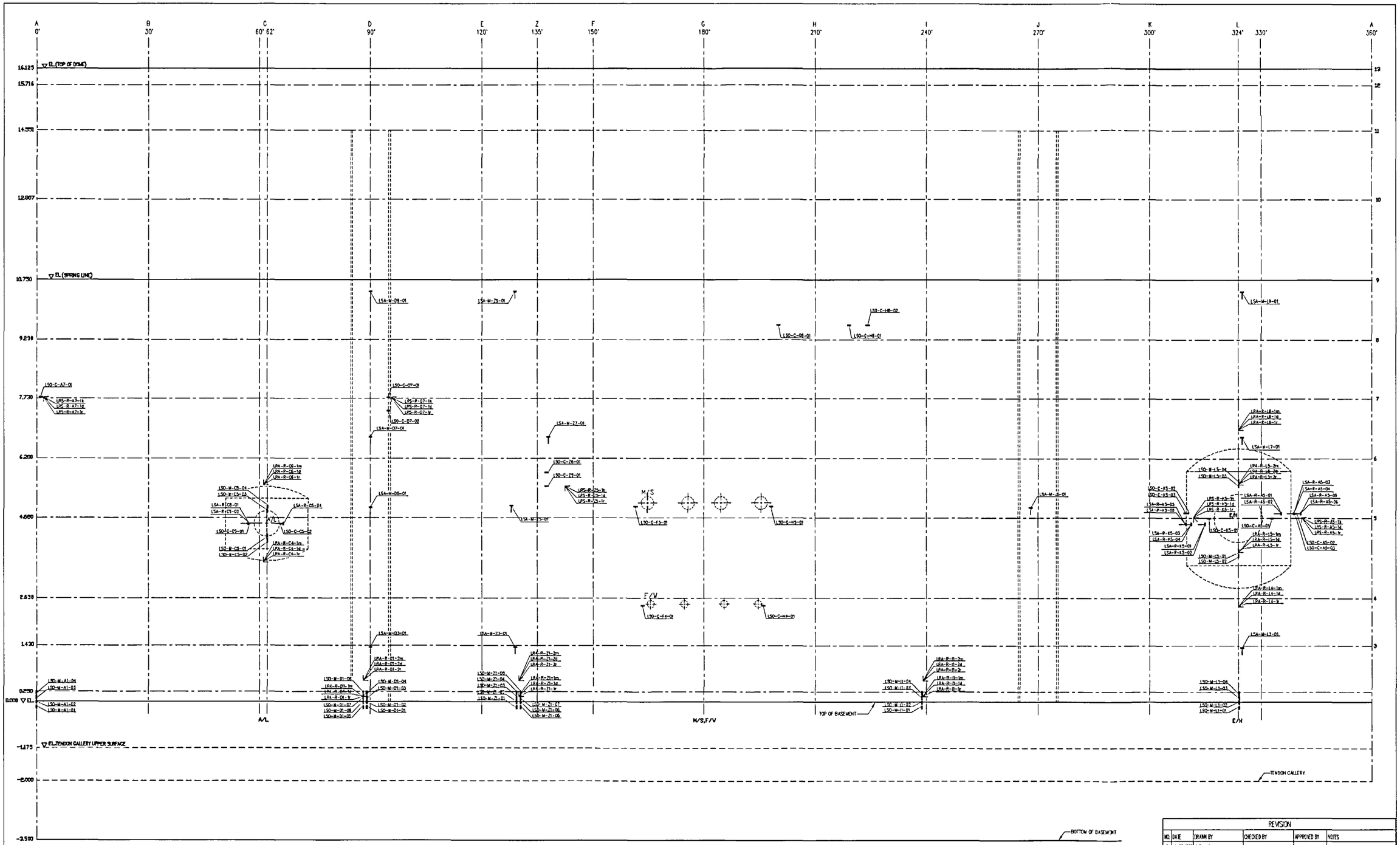

LEGEND

- LSO-N Meridional (Vertical) Liner Strain Gage
- LSO-C Circumferential (Hoop) Liner Strain Gage
- LSA-M Meridional (Vertical) Gage onAnchor Web.
- LSA-R Radial Gage on Anchor Web
- LRA - Rosette on Vertical Liner Anchor Web
- LRS - Rosette on Horizontal Liner Stiffener

NOTE: For Rosette Gage ID's ending in:
m- meridional direction
h - hoop direction
r - radial direction
d - diagonal direction

STRAIN GAGES ON LINER EXTERIOR - VIEW FROM INSIDE

REVISION					
NO.	DATE	DRAWN BY	CHECKED BY	APPROVED BY	NOTES
0	July 20,1995	J. Tenorio			
1	Jan.31,2001	J. Tenorio			Corrected Azimuth Lines

NUPEC/NRC PCCV STRUCTURAL BEHAVIOR TEST MODEL

DRAWING NO.		SCALE
D-SN-P-129	STRAIN GAGE LAYOUT EXTERIOR LINER	N.T.S

SANDIA NATIONAL LABORATORIES FACILITIES ENGINEERING
ALBUQUERQUE, NEW MEXICO; LIVERMORE, CALIFORNIA; TONOPAH, NEVADA

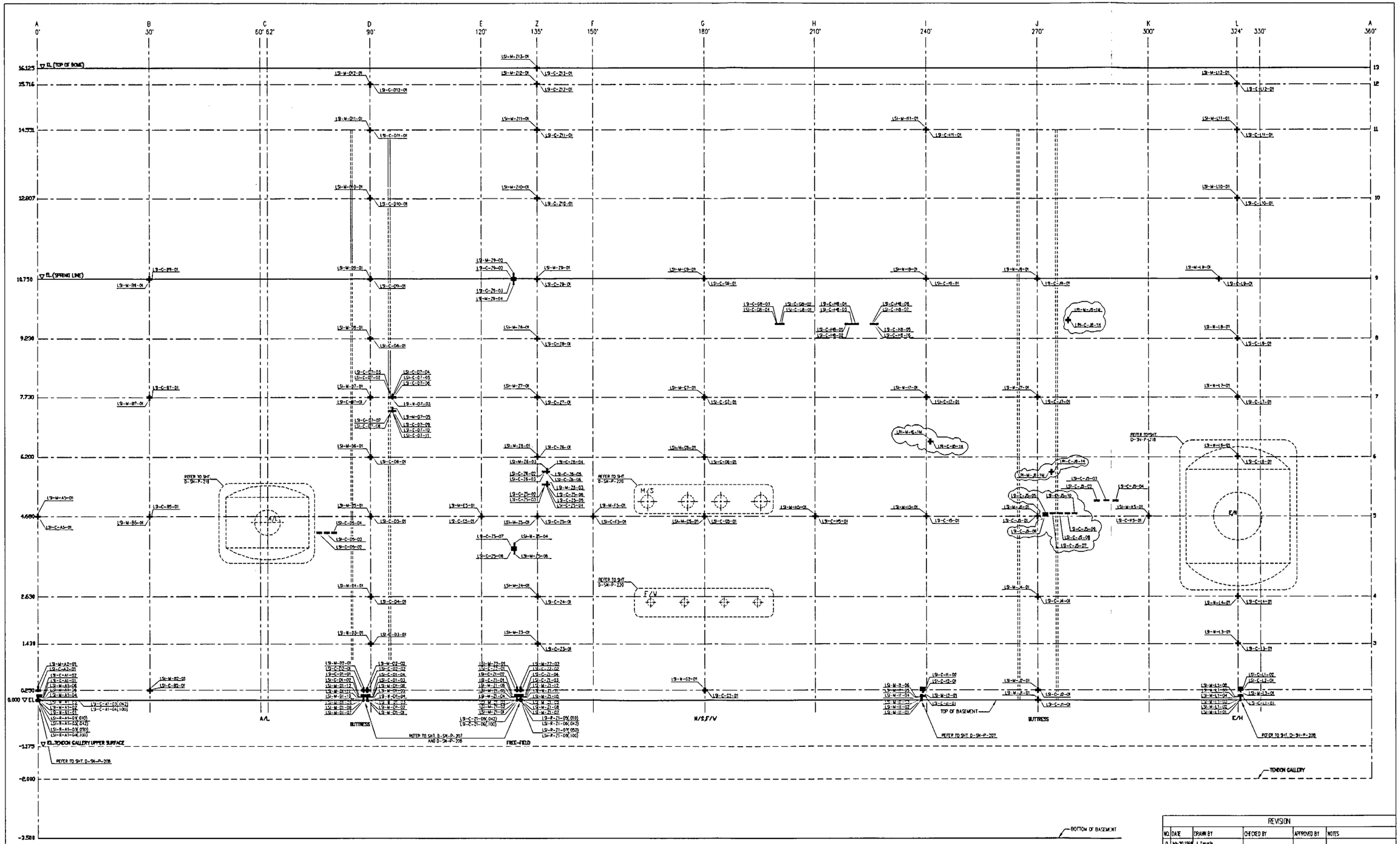

LEGEND

- M – Meridional Strain Gage(Vertical)
- C – Circumferential Strain Gage (Hoop)
- R – Radial Strain Gage (on Basement Liner Only)
- ( ) – Dimension shown after ID is Distance from Cylinder liner in Meters

STRAIN GAGES ON LINER INTERIOR - VIEW FROM INSIDE

REVISION

NO.	DATE	DRAWN BY	CHECKED BY	APPROVED BY	NOTES
0	July,20 1995	J. Tenorio			
1	Jan 31,2001	J. Tenorio			Added Gages

NUPEC/NRC PCCV STRUCTURAL BEHAVIOR TEST MODEL

DRAWING NO.		SCALE
D-SN-P-130	STRAIN GAGE LAYOUT INTERIOR LINER	N.T.S.

SANDIA NATIONAL LABORATORIES FACILITIES ENGINEERING
ALBUQUERQUE, NEW MEXICO; LIVERMORE, CALIFORNIA; TONOPAH, NEVADA

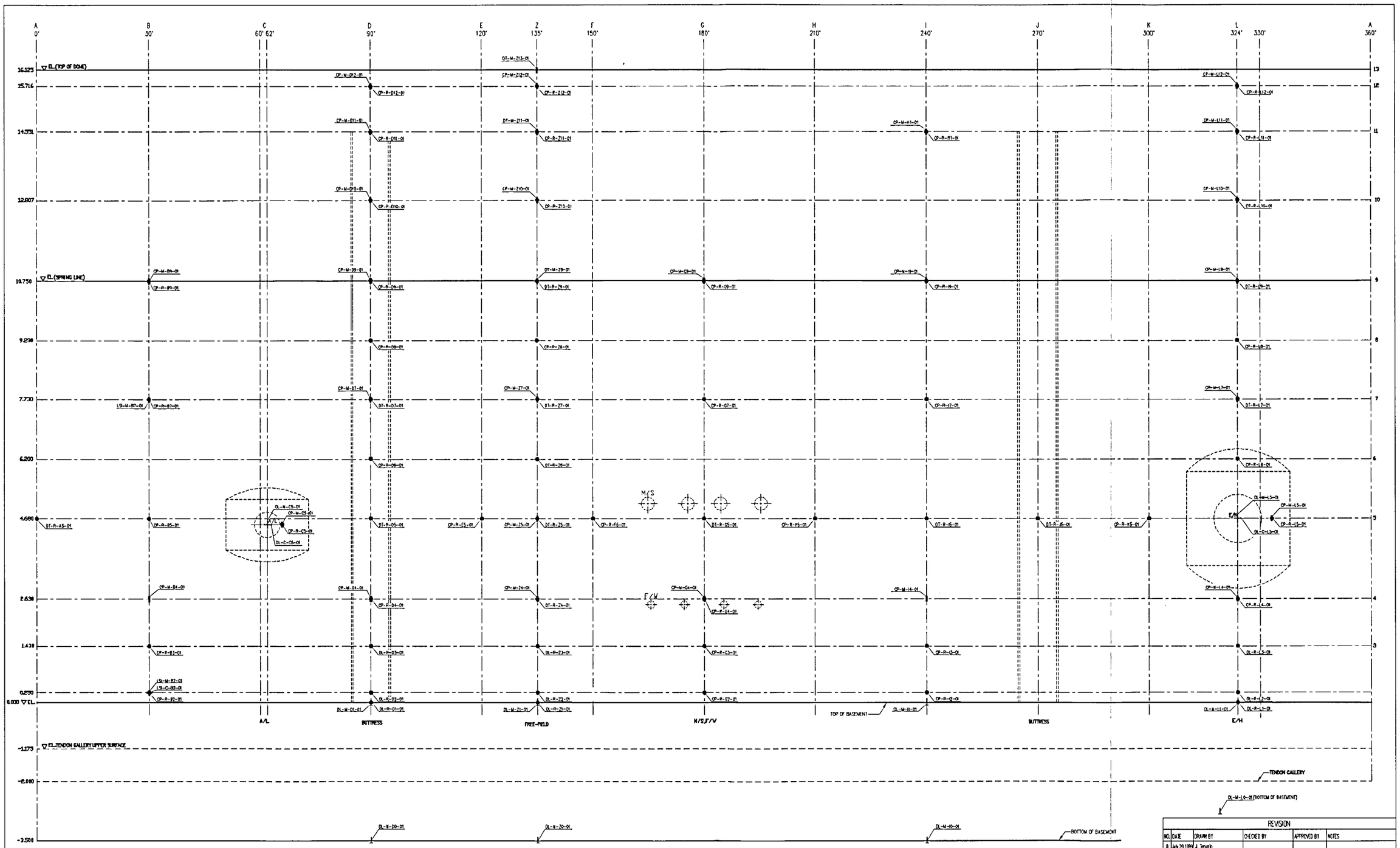

LEGEND

- M – Meridional Interior Displacement (Vertical)
- R – Radial Interior Displacement (Horizontal)
- M – Meridional Exterior displacement (Vertical)
- M & C – Meridional and Circumferential Barrel Diameters (Vertical & Horizontal)

DISPLACEMENT TRANSDUCERS (INTERNAL & EXTERNAL) – VIEW FROM INSIDE

REVISION					
NO.	DATE	DRAWN BY	CHECKED BY	APPROVED BY	NOTES
0	July 20 1999	J. Tenorio			
1	Jan. 31, 2001	J. Tenorio			Corrected Azimuth lines

NUPEC/NRC PCCV STRUCTURAL BEHAVIOR TEST MODEL

DRAWING NO.		SCALE
D-SN-P-131	DISPLACEMENT TRANSDUCER LAYOUT	N.T.S.

SANDIA NATIONAL LABORATORIES FACILITIES ENGINEERING
ALBUQUERQUE, NEW MEXICO; LIVERMORE, CALIFORNIA; TONOPAH, NEVADA

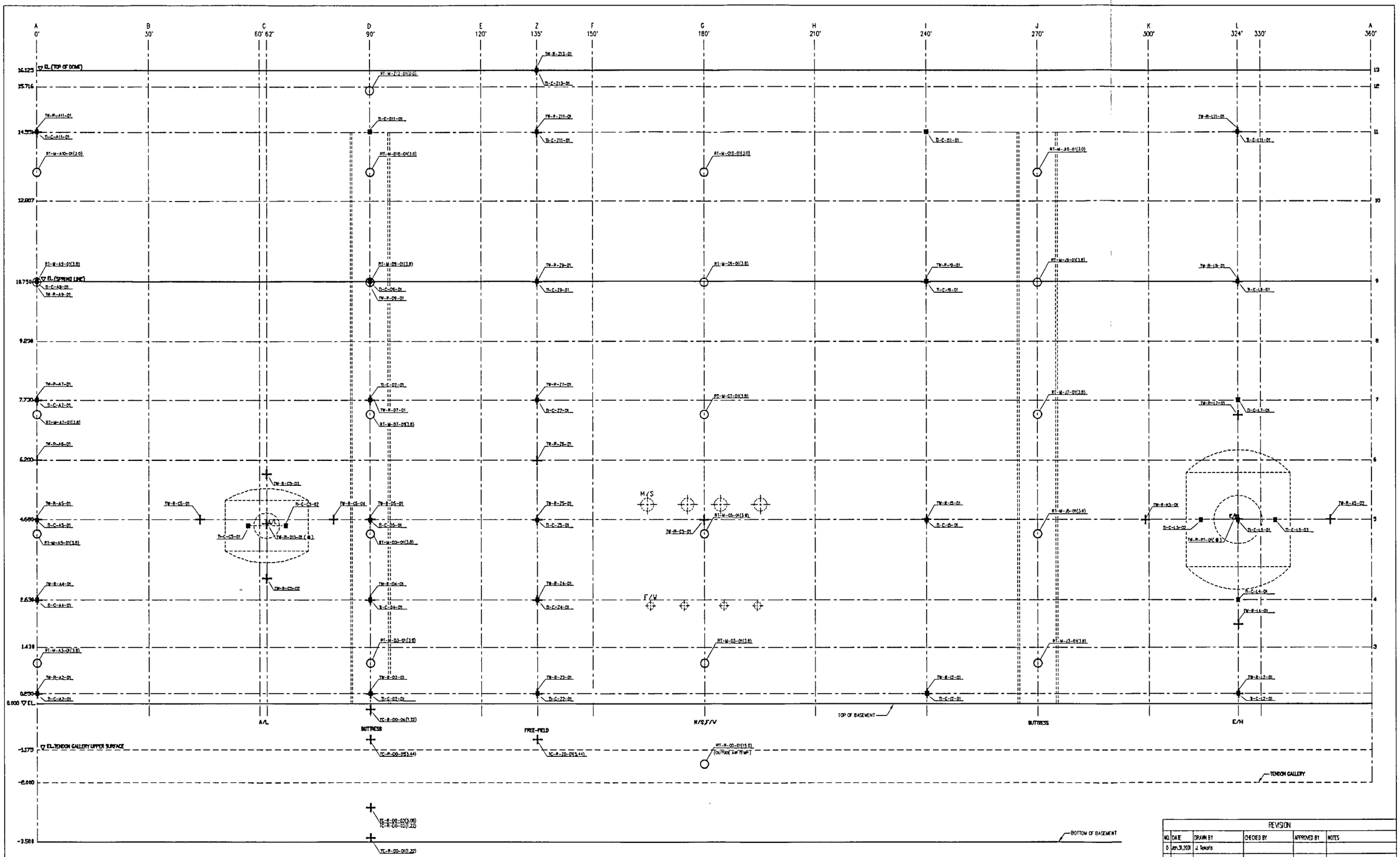

LEGEND

- + TC, TW – Thermocouple (Embedded in Concrete)
- ■ TI – Thermocouple (Inside Liner Surface)
- ○ RT – RTD (Inside Air)
- ( ) Dimension show after I.D. is distance From Centerline in Meters
- (⊕) On Barrel Displacement Hardware

TEMPERATURE SENSORS - VIEW FROM INSIDE

REVISION					
NO.	DATE	DRAWN BY	CHECKED BY	APPROVED BY	NOTES
0	Jan.31,2001	J. Takahi			

NUPEC/NRC PCCV STRUCTURAL BEHAVIOR TEST MODEL

DRAWING NO.		SCALE
D-SN-P-132	TEMPERATURE SENSOR LAYOUT	N.T.S

SANDIA NATIONAL LABORATORIES FACILITIES ENGINEERING
ALBUQUERQUE, NEW MEXICO; LIVERMORE, CALIFORNIA; TONOPAH, NEVADA

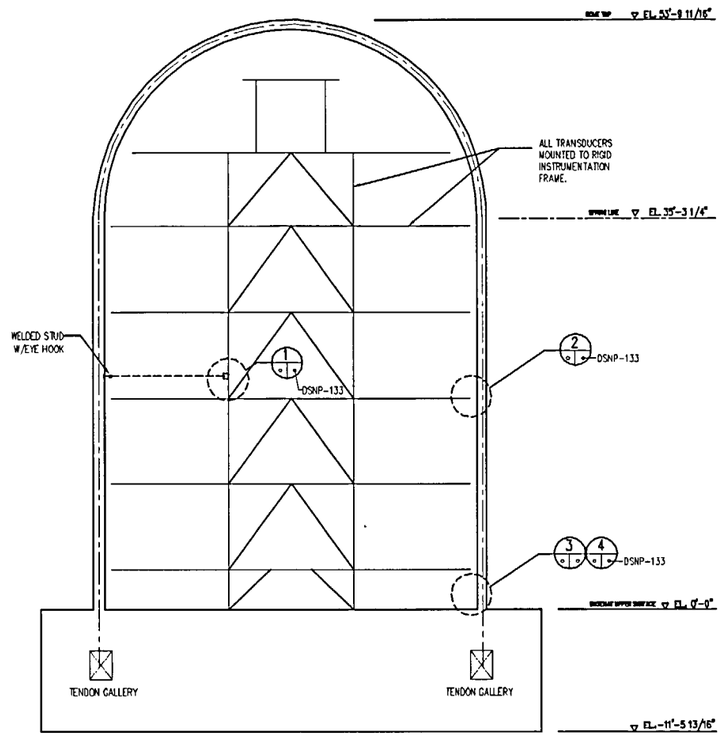

A DSNP-133 PCCV ELEVATION

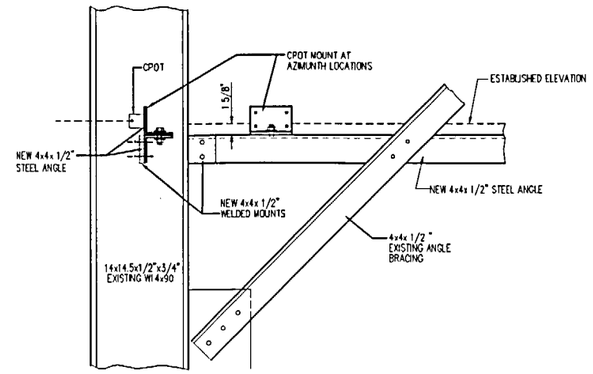

1 DSNP-133 TYPICAL RADIAL CPOT MOUNTING

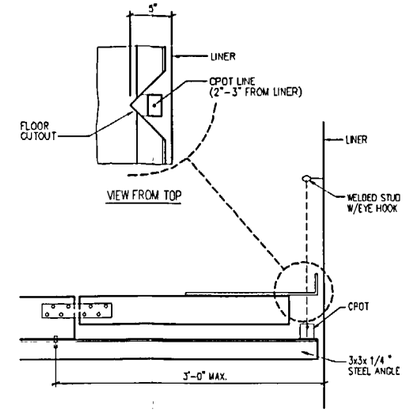

2 DSNP-133 TYPICAL VERTICAL CPOT MOUNTING

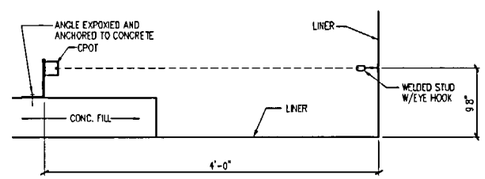

3 DSNP-133 CPOT MOUNTED ON BASEMAT

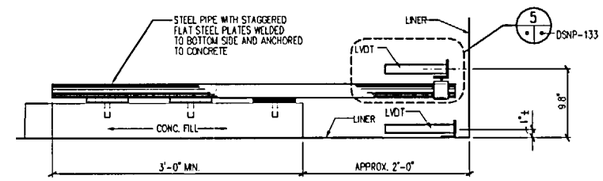

3 LOCATIONS
(2 LVDT's ONLY)

4 DSNP-133 LVDT's MOUNTED ON BASEMAT

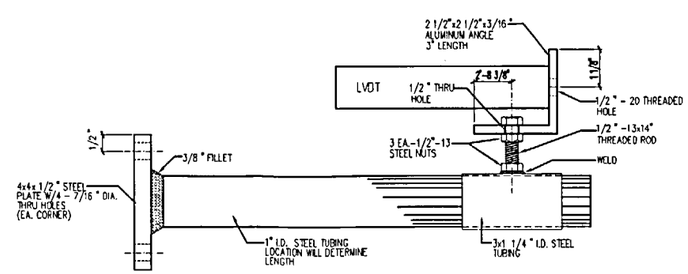

5 DSNP-133 RADIAL LVDT MOUNTING HARDWARE

REVISION					
NO.	DATE	DRAWN BY	CHECKED BY	APPROVED BY	NOTES
0	Aug.31,2001	J. Tenorio			

NUPEC/NRC PCCV STRUCTURAL BEHAVIOR TEST MODEL

DRAWING NO.		SCALE
D-SN-P-133	DISPLACEMENT TRANSDUCER FIXTURES	1/1

SANDIA NATIONAL LABORATORIES FACILITIES ENGINEERING
ALBUQUERQUE, NEW MEXICO; LIVERMORE, CALIFORNIA; TONOPAH, NEVADA

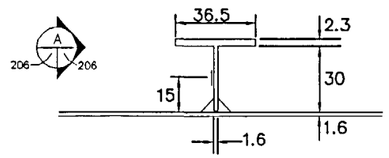

1 TYPICAL ANCHOR WEB GAUGE

206

ZCD1002Ai
ZCD1007Ai
ZCD1008Ai
ZCD1009Ai
200
201
202
203
204

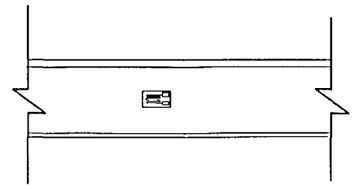

A SIDE VIEW

206 206

ANCHOR GAGE LOCATIONS			
LABELING ID (name)	AZIMUTHAL ANGLE (deg)	VERTICAL ELEVATION (in)	LINER MARK #
LSA-M-D3-01	90	53.1	1-3B
LSA-M-D5-01	90	194.9	3-4C
LSA-M-D7-01	90	301.2	4-3B
LSA-M-D9-01	90	411.4	5-4B
LSA-M-Z3-01	129	53.1	1-4B
LSA-M-Z5-01	128	194.9	3-5C
LSA-M-Z7-01	138	301.2	4-5B
LSA-M-Z9-01	129	411.4	5-6B
LSA-M-J5-01	268	194.9	3-9C
LSA-M-L3-01	325	53.1	1-11B
LSA-M-L7-01	325	301.2	4-10B
LSA-M-L9-01	325	411.4	5-13B

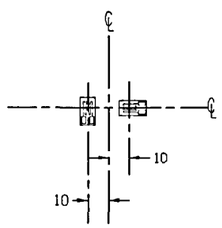

2 TYPICAL VERTICAL AND HOOP GAUGE

206

ZCD1002Ai
ZCD1007Ai
ZCD1008Ai
ZCD1009Ai
200
201
202
203
204

FREE FIELD LINER GAGE LOCATIONS

LABELING ID (name)	AZIMUTHAL ANGLE (deg)	VERTICAL ELEVATION (in)
LSI-C-A2-01	0	9.8
LSI-M-A2-01	0	9.8
LSI-C-A5-01	0	184.3
LSI-M-A5-01	0	184.3
LSI-C-B2-01	30	9.8
LSI-M-B2-01	30	9.8
LSI-C-B5-01	30	184.3
LSI-M-B5-01	30	184.3
LSI-C-B7-01	30	304.3
LSI-M-B7-01	30	304.3
LSI-C-B9-01	30	423.2
LSI-M-B9-01	30	423.2
~~LSI-C-C5-01~~	~~62~~	~~184.3~~
~~LSI-M-C5-01~~	~~62~~	~~184.3~~
LSI-C-D2-01	88.9	9.8
LSI-M-D2-01	88.9	9.8
LSI-C-D2-02	89.6	9.8
LSI-M-D2-02	89.6	9.8
LSI-C-D3-01	90	56.3
LSI-M-D3-01	90	56.3
LSI-C-D4-01	90	103.5
LSI-M-D4-01	90	103.5
LSI-C-D5-01	90	184.3
LSI-M-D5-01	90	184.3
LSI-C-D6-01	90	244.1
LSI-M-D6-01	90	244.1
LSI-C-D7-01	90	304.3
LSI-M-D7-01	90	304.3
LSI-C-D8-01	90	363.4
LSI-M-D8-01	90	363.4
LSI-C-D9-01	90	423.2
LSI-M-D9-01	90	423.2
LSI-C-D10-01	90	504.2
LSI-M-D10-01	90	504.2

LABELING ID (name)	AZIMUTHAL ANGLE (deg)	VERTICAL ELEVATION (in)
LSI-C-D11-01	90	572.9
LSI-M-D11-01	90	572.9
LSI-C-D12-01	90	618.7
LSI-M-D12-01	90	618.7
LSI-C-E5-01	120	184.3
LSI-M-E5-01	120	184.3
LSI-C-Z2-01	129.5	9.8
LSI-M-Z2-01	129.5	9.8
LSI-C-Z2-02	130.4	9.8
LSI-M-Z2-02	130.4	9.8
LSI-C-Z3-01	135	56.3
LSI-M-Z3-01	135	56.3
LSI-C-Z4-01	135	103.5
LSI-M-Z4-01	135	103.5
LSI-C-Z5-01	135	184.3
LSI-M-Z5-01	135	184.3
LSI-C-Z6-01	135	244.1
LSI-M-Z6-01	135	244.1
LSI-C-Z7-01	135	304.3
LSI-M-Z7-01	135	304.3
LSI-C-Z8-01	135	363.4
LSI-M-Z8-01	135	363.4
LSI-C-Z9-01	135	423.2
LSI-M-Z9-01	135	423.2
LSI-C-Z10-01	135	504.2
LSI-M-Z10-01	135	504.2
LSI-C-Z11-01	135	572.9
LSI-M-Z11-01	135	572.9
LSI-C-Z12-01	135	618.7
LSI-M-Z12-01	135	618.7
LSI-C-Z13-01	135	634.8
LSI-M-Z13-01	135	634.8
LSI-C-F5-01	150	184.3
LSI-M-F5-01	150	184.3

LABELING ID (name)	AZIMUTHAL ANGLE (deg)	VERTICAL ELEVATION (in)
LSI-C-G2-01	180	9.8
LSI-M-G2-01	180	9.8
LSI-C-G5-01	180	184.3
LSI-M-G5-01	180	184.3
LSI-C-G6-01	180	244.1
LSI-M-G6-01	180	244.1
LSI-C-G7-01	180	304.3
LSI-M-G7-01	180	304.3
LSI-C-G9-01	180	423.2
LSI-M-G9-01	180	423.2
LSI-C-H5-01	210	184.3
LSI-M-H5-01	210	184.3
LSI-C-I2-01	239.4	9.8
LSI-M-I2-01	239.4	9.8
LSI-C-I5-01	240	184.3
LSI-M-I5-01	240	184.3
LSI-C-I7-01	240	304.3
LSI-M-I7-01	240	304.3
LSI-C-I9-01	240	423.2
LSI-M-I9-01	240	423.2
LSI-C-I11-01	240	572.9
LSI-M-I11-01	240	572.9
LSI-C-J1-01	270	0.0
LSI-M-J1-01	270	0.0
LSI-C-J2-01	270	9.8
LSI-M-J2-01	270	9.8
LSI-C-J4-01	270	103.5
LSI-M-J4-01	270	103.5
LSI-C-J5-01	270	184.3
LSI-M-J5-01	270	184.3
LSI-C-J7-01	270	304.3
LSI-M-J7-01	270	304.3
LSI-C-J9-01	270	423.2
LSI-M-J9-01	270	423.2

LABELING ID (name)	AZIMUTHAL ANGLE (deg)	VERTICAL ELEVATION (in)
LSI-C-K5-01	300	184.3
LSI-M-K5-01	300	184.3
LSI-C-L2-01	324.6	9.8
LSI-M-L2-01	324.6	9.8
LSI-C-L3-01	324	56.3
LSI-M-L3-01	324	56.3
LSI-C-L4-01	324	103.5
LSI-M-L4-01	324	103.5
~~LSI-C-L5-01~~	~~324~~	~~184.3~~
~~LSI-M-L5-01~~	~~324~~	~~184.3~~
LSI-C-L6-01	324	244.1
LSI-M-L6-01	324	244.1
LSI-C-L7-01	324	304.3
LSI-M-L7-01	324	304.3
LSI-C-L8-01	324	304.3
LSI-M-L8-01	324	304.3
LSI-C-L9-01	324	423.2
LSI-M-L9-01	324	423.2
LSI-C-L10-01	324	504.2
LSI-M-L10-01	324	504.2
LSI-C-L11-01	324	572.9
LSI-M-L11-01	324	572.9
LSI-C-L12-01	324	618.7
LSI-M-L12-01	324	618.7

HOOP ONLY GAGES		
LSI-C-D5-02	76.8	168
LSI-C-D5-03	78.4	168
LSI-C-D5-04	80	168
LSI-C-J5-02	286	200
LSI-C-J5-03	288.5	200
LSI-C-J5-04	291	200

NOTE:

AHCHOR WEB GAUGE LOCATIONS SHOWN ON DRAWINGS ZCD1002Ai, ZCD1007Ai, ZCD1008Ai, AND ZCD1009Ai

ALL DIMENSIONS SHOWN IN MM

ASSURE GAUGES PLACED 300MM FROM EDGE OR ANY FUTURE WELDING LOCATIONS. AND 100MM AWAY FROM DISCONTINUITYS.

REVISION

NO.	DATE	DRAWN BY	CHECKED BY	APPROVED BY	NOTES
0	May 15, 1997	T. Martinez			
1	July 20, 1998	J. Tenorio			Removed Gages

NUPEC/NRC PCCV STRUCTURAL BEHAVIOR TEST MODEL

DRAWING NO. D-SN-P-206

INSTRUMENTATION LINER DETAILS
GAUGES INSTALLATION DETAILS

SCALE 1/1

SANDIA NATIONAL LABORATORIES FACILITIES ENGINEERING
ALBUQUERQUE, NEW MEXICO; LIVERMORE, CALIFORNIA; TONOPAH, NEVADA

FILE NAME: DSNP206

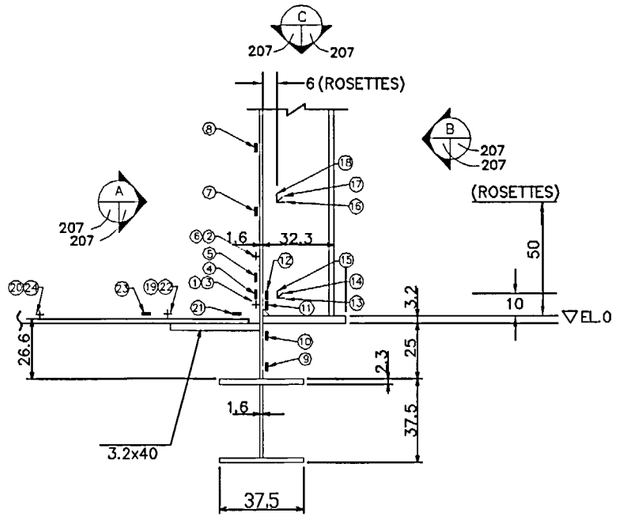

BASEMAT LINER CONNECTION DETAIL

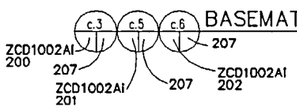

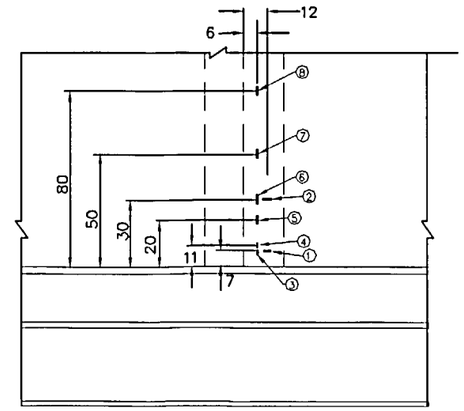

A INSIDE VIEW
207 207

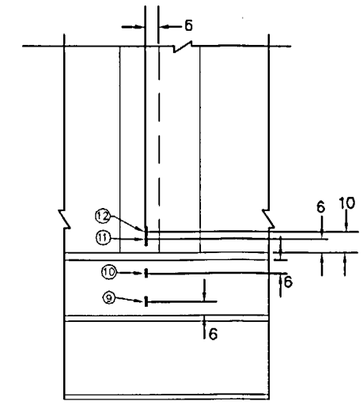

B OUTSIDE VIEW
207 207

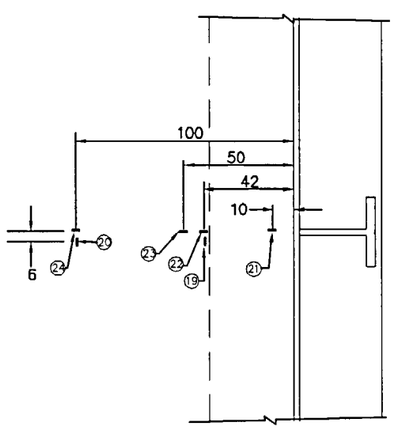

TOP VIEW (c.5 only)
C
207 207

INSTRUMENTATION ID #			
Detail #	c.5	c.3	c.6
Azimuth	131	90	240
Elevation	0	0	0
Liner #	1-4C	1-3C	1-8C
Instr. #			
①	LSI-C-Z1-03	LSI-C-D1-03	LSI-C-I1-01
②	LSI-C-Z1-04	LSI-C-D1-04	LSI-C-I1-02
③	LSI-M-Z1-07	LSI-M-D1-07	LSI-M-I1-01
④	LSI-M-Z1-08	LSI-M-D1-08	LSI-M-I1-02
⑤	LSI-M-Z1-09	LSI-M-D1-09	LSI-M-I1-03
⑥	LSI-M-Z1-10	LSI-M-D1-10	LSI-M-I1-04
⑦	LSI-M-Z1-11	LSI-M-D1-11	LSI-M-I1-05
⑧	LSI-M-Z1-12	LSI-M-D1-12	LSI-M-I1-06
⑨	LSO-M-Z1-05	LSO-M-D1-05	LSO-M-I1-01
⑩	LSO-M-Z1-06	LSO-M-D1-06	LSO-M-I1-02
⑪	LSO-M-Z1-07	LSO-M-D1-07	LSO-M-I1-03
⑫	LSO-M-Z1-08	LSO-M-D1-08	LSO-M-I1-04
⑬	LRA-R-Z1-1r	LRA-R-D1-1r	LRA-R-I1-1r
⑭	LRA-R-Z1-1d	LRA-R-D1-1d	LRA-R-I1-1d
⑮	LRA-R-Z1-1m	LRA-R-D1-1m	LRA-R-I1-1m
⑯	LRA-R-Z1-2r	LRA-R-D1-2r	LRA-R-I1-2r
⑰	LRA-R-Z1-2d	LRA-R-D1-2d	LRA-R-I1-2d
⑱	LRA-R-Z1-2m	LRA-R-D1-2m	LRA-R-I1-2m
⑲	LSI-C-Z1-05	n/a	n/a
⑳	LSI-C-Z1-06	n/a	n/a
㉑	LSI-R-Z1-05	n/a	n/a
㉒	LSI-R-Z1-06	n/a	n/a
㉓	LSI-R-Z1-07	n/a	n/a
㉔	LSI-R-Z1-08	n/a	n/a

NOTE:
ALL DIMENSIONS SHOWN IN MM

REVISION					
NO.	DATE	DRAWN BY	CHECKED BY	APPROVED BY	NOTES
0	May 15, 1997	T. Martinez			
1	July 20, 1999	J. Tenorio			Drawing No.'s

NUPEC/NRC PCCV STRUCTURAL BEHAVIOR TEST MODEL

DRAWING NO.		SCALE
D-SN-P-207	INSTRUMENTATION LINER DETAILS BASEMAT LINER CONNECTION & ANCHOR	1/1

SANDIA NATIONAL LABORATORIES FACILITIES ENGINEERING
ALBUQUERQUE, NEW MEXICO; LIVERMORE, CALIFORNIA; TONOPAH, NEVADA

FILE NAME: DSNP207

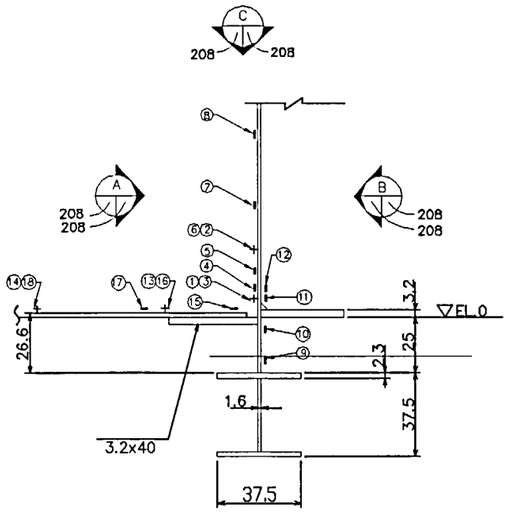

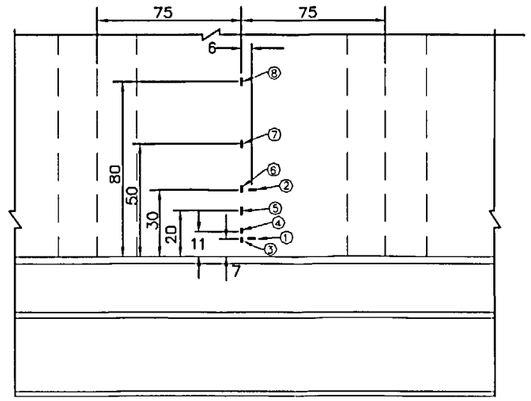

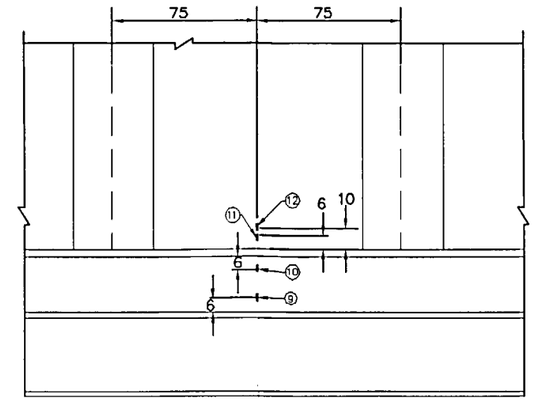

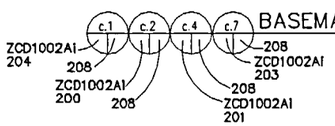

BASEMAT LINER CONNECTION DETAIL

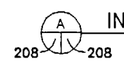

INSIDE VIEW

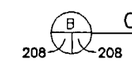

OUTSIDE VIEW

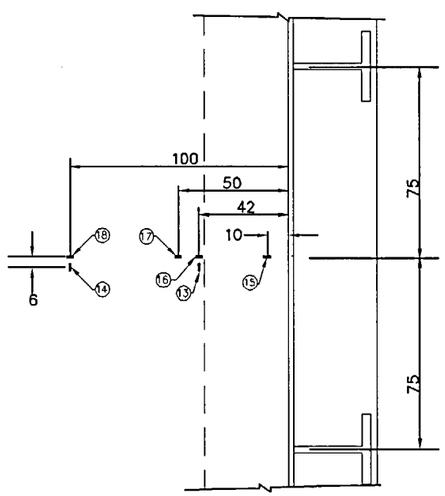

TOP VIEW (c.1 only)

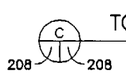

INSTRUMENTATION ID #				
Detail #	c.1	c.2	c.4	c.7
Azimuth	0	89	130	324
Elevation	0	0	0	0
Liner #	1-12C	1-3C	1-4C	1-11C
Instr. #				
①	LSI-C-A1-01	LSI-C-D1-01	LSI-C-Z1-01	LSI-C-L1-01
②	LSI-C-A1-02	LSI-C-D1-02	LSI-C-Z1-02	LSI-C-L1-02
③	LSI-M-A1-01	LSI-M-D1-01	LSI-M-Z1-01	LSI-M-L1-01
④	LSI-M-A1-02	LSI-M-D1-02	LSI-M-Z1-02	LSI-M-L1-02
⑤	LSI-M-A1-03	LSI-M-D1-03	LSI-M-Z1-03	LSI-M-L1-03
⑥	LSI-M-A1-04	LSI-M-D1-04	LSI-M-Z1-04	LSI-M-L1-04
⑦	LSI-M-A1-05	LSI-M-D1-05	LSI-M-Z1-05	LSI-M-L1-05
⑧	LSI-M-A1-06	LSI-M-D1-06	LSI-M-Z1-06	LSI-M-L1-06
⑨	LSO-M-A1-01	LSO-M-D1-01	LSO-M-Z1-01	LSO-M-L1-01
⑩	LSO-M-A1-02	LSO-M-D1-02	LSO-M-Z1-02	LSO-M-L1-02
⑪	LSO-M-A1-03	LSO-M-D1-03	LSO-M-Z1-03	LSO-M-L1-03
⑫	LSO-M-A1-04	LSO-M-D1-04	LSO-M-Z1-04	LSO-M-L1-04
⑬	LSI-C-A1-03	n/a	n/a	n/a
⑭	LSI-C-A1-04	n/a	n/a	n/a
⑮	LSI-R-A1-01	n/a	n/a	n/a
⑯	LSI-R-A1-02	n/a	n/a	n/a
⑰	LSI-R-A1-03	n/a	n/a	n/a
⑱	LSI-R-A1-04	n/a	n/a	n/a

NOTE:
ALL DIMENSIONS SHOWN IN MM

REVISION					
NO.	DATE	DRAWN BY	CHECKED BY	APPROVED BY	NOTES
0	May 15, 1997	T. Martinez			
1	July 20, 1998	J. Tenorio			Drawing No.'s

NUPEC/NRC PCCV STRUCTURAL BEHAVIOR TEST MODEL

DRAWING NO. D-SN-P-206 | INSTRUMENTATION LINER DETAILS BASEMAT LINER CONNECTION | SCALE 1/1

SANDIA NATIONAL LABORATORIES FACILITIES ENGINEERING
ALBUQUERQUE, NEW MEXICO; LIVERMORE, CALIFORNIA; TONOPAH, NEVADA

FILE NAME: DSNP208

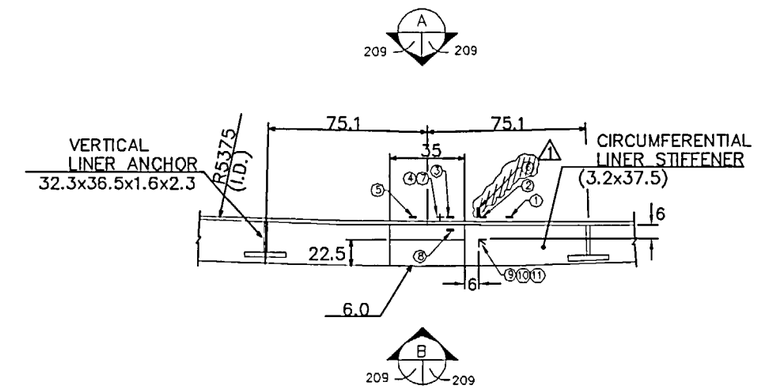

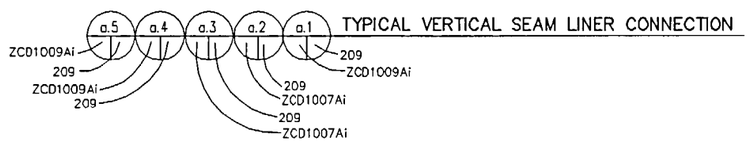

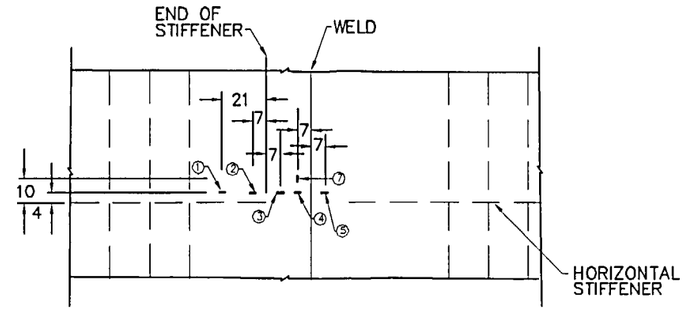

A INSIDE VIEW
209 209

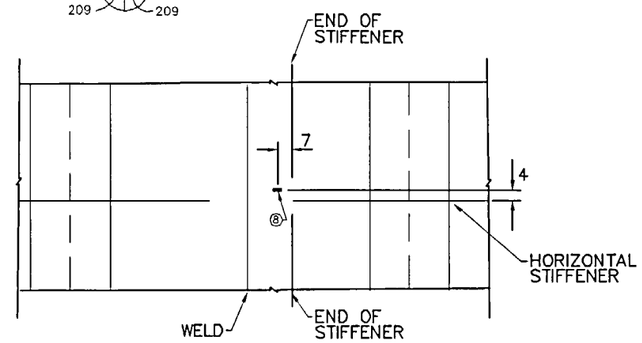

B OUTSIDE VIEW
209 209

INSTRUMENTATION ID #					
Detail #	a.1	a.2	a.3	a.4	a.5
Azimuth	2	137	137	95	95
Elevation	7750	5487	5831	7750	7400
Liner. #	4-1B	3-6B	3-6B	4-3B	4-3B
Instr. #					
①	~~LSI-C-A7-01~~	LSI-C-Z5-02	LSI-C-Z6-02	LSI-C-D7-02	LSI-C-D7-07
②	~~LSI-C-A7-02~~	LSI-C-Z5-03	LSI-C-Z6-03	LSI-C-D7-03	LSI-C-D7-08
③	~~LSI-C-A7-03~~	LSI-C-Z5-04	LSI-C-Z6-04	LSI-C-D7-04	LSI-C-D7-09
④	~~LSI-C-A7-04~~	LSI-C-Z5-05	LSI-C-Z6-05	LSI-C-D7-05	LSI-C-D7-10
⑤	~~LSI-C-A7-05~~	LSI-C-Z5-06	LSI-C-Z6-06	LSI-C-D7-06	LSI-C-D7-11
⑥	~~LSI-M-A7-01~~	~~LSI-M-Z5-03~~	~~LSI-M-Z6-03~~	~~LSI-M-D7-03~~	~~LSI-M-D7-04~~ 1
⑦	~~LSI-M-A7-02~~	LSI-M-Z5-03	LSI-M-Z6-03	LSI-M-D7-03	LSI-M-D7-05
⑧	LSO-C-A7-01	LSO-C-Z5-01	LSO-C-Z6-01	LSO-C-D7-01	LSO-C-D7-02
⑨	LRS-R-A7-1r	LRS-R-Z5-1r	n/a	LRS-R-D7-1r	n/a
⑩	LRS-R-A7-1d	LRS-R-Z5-1d	n/a	LRS-R-D7-1d	n/a
⑪	LRS-R-A7-1h	LRS-R-Z5-1h	n/a	LRS-R-D7-1h	n/a

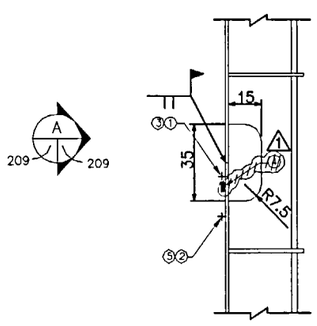

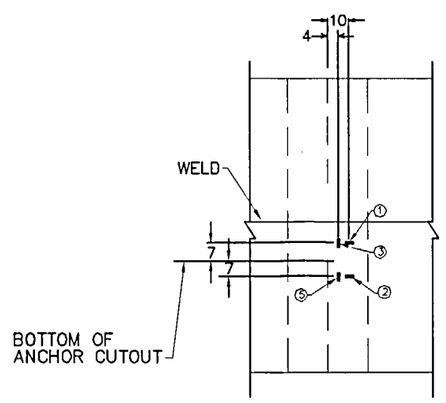

INSTRUMENTATION ID #			
Detail #	b.1	b.2	~~b.3~~
Azimuth	130	130	~~270~~
Elevation	10750	3869	~~7012~~
Liner #	5-6B	2-4B	~~3-9A~~
Instr. #			
①	LSI-C-Z9-02	LSI-C-Z5-07	~~LSI-C-J7-02~~
②	LSI-C-Z9-03	LSI-C-Z5-08	~~LSI-C-J7-03~~
③	LSI-M-Z9-02	LSI-M-Z5-04	~~LSI-M-J7-02~~
④	~~LSI-M-Z9-03~~	~~LSI-M-Z5-05~~	~~LSI-M-J7-03~~ 1
⑤	LSI-M-Z9-04	LSI-M-Z5-06	~~LSI-M-J7-04~~

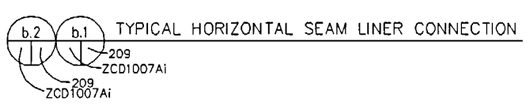

A INSIDE VIEW
209 209

REVISION					
NO	DATE	DRAWN BY	CHECKED BY	APPROVED BY	NOTES
0	Feb.4.1998	T. Martinez			
1	July 20,1999	J.Tenorio			Removed Gages

NUPEC/NRC PCCV STRUCTURAL BEHAVIOR TEST MODEL

DRAWING NO.		SCALE
D-SN-P-209	INSTRUMENTATION LINER DETAILS DETAIL a & b	1/1

SANDIA NATIONAL LABORATORIES FACILITIES ENGINEERING
ALBUQUERQUE, NEW MEXICO; LIVERMORE, CALIFORNIA; TONOPAH, NEVADA

FILE NAME: DSNP209

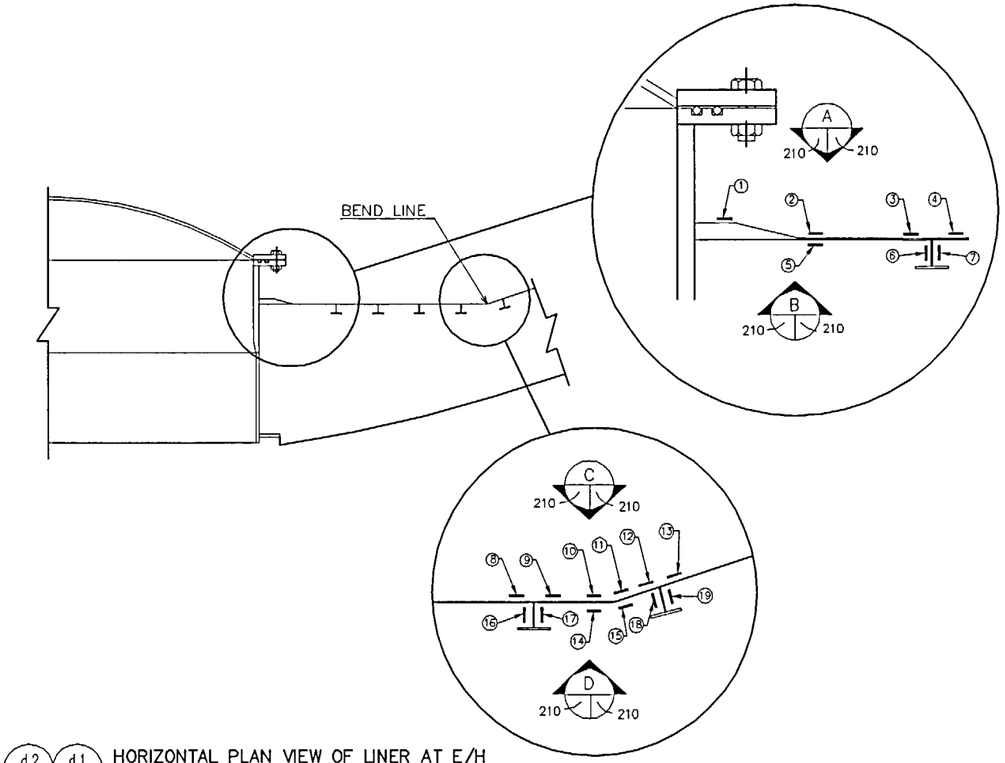

d.2 d.1 HORIZONTAL PLAN VIEW OF LINER AT E/H

ZCD1010Ai 210 — 210 ZCD1010Ai

INSTRUMENTATION ID #		
Detail #	d.1	d.2
Azimuth	310	340
Elevation	4800	4800
Liner #	3-11D	3-11E
Instr. #		
1	LSI-C-K5-02	LSI-C-A5-02
2	LSI-C-K5-03	LSI-C-A5-03
3	LSI-C-K5-04	LSI-C-A5-04
4	LSI-C-K5-05	LSI-C-A5-05
5	LSO-C-K5-01	LSO-C-A5-01
6	LSA-R-K5-01	LSA-R-A5-01
7	LSA-R-K5-02	LSA-R-A5-02
8	LSI-C-K5-06	LSI-C-A5-06
9	LSI-C-K5-07	LSI-C-A5-07
10	LSI-C-K5-08	LSI-C-A5-08
11	LSI-C-K5-09	LSI-C-A5-09
12	LSI-C-K5-10	LSI-C-A5-10
13	LSI-C-K5-11	LSI-C-A5-11
14	LSO-C-K5-02	LSO-C-A5-02
15	LSO-C-K5-03	LSO-C-A5-03
16	LSA-R-K5-03	LSA-R-A5-03
17	LSA-R-K5-04	LSA-R-A5-04
18	LSA-R-K5-05	LSA-R-A5-05
19	LSA-R-K5-06	LSA-R-A5-06
20	LSI-C-K5-15	LSI-C-A5-15

NOTE: CENTER LSA GAUGES ON ANCHOR WEB ORIENTED IN RADIAL DIRECTION (HORIZONTAL)

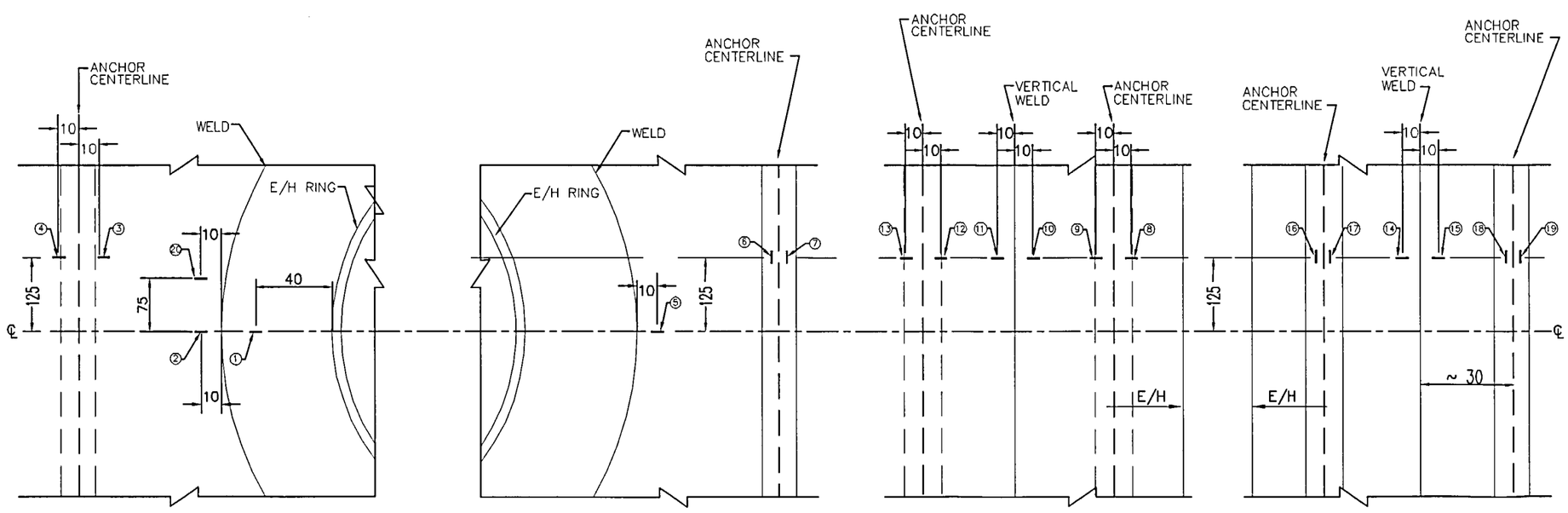

A INSIDE VIEW 210 — 210

B OUTSIDE VIEW 210 — 210

C INSIDE VIEW 210 — 210

D OUTSIDE VIEW 210 — 210

REVISION					
NO.	DATE	DRAWN BY	CHECKED BY	APPROVED BY	NOTES
0	Feb 6, 1998	T. Martinez			
1	July 20, 1999	J. Tenorio			Moved Gages

NUPEC/NRC PCCV STRUCTURAL BEHAVIOR TEST MODEL

DRAWING NO. D-SN-P-210 | INSTRUMENTED LINER DETAILS DETAIL d | SCALE 1/1

SANDIA NATIONAL LABORATORIES FACILITIES ENGINEERING
ALBUQUERQUE, NEW MEXICO; LIVERMORE, CALIFORNIA; TONOPAH, NEVADA

FILE NAME: DSNP210

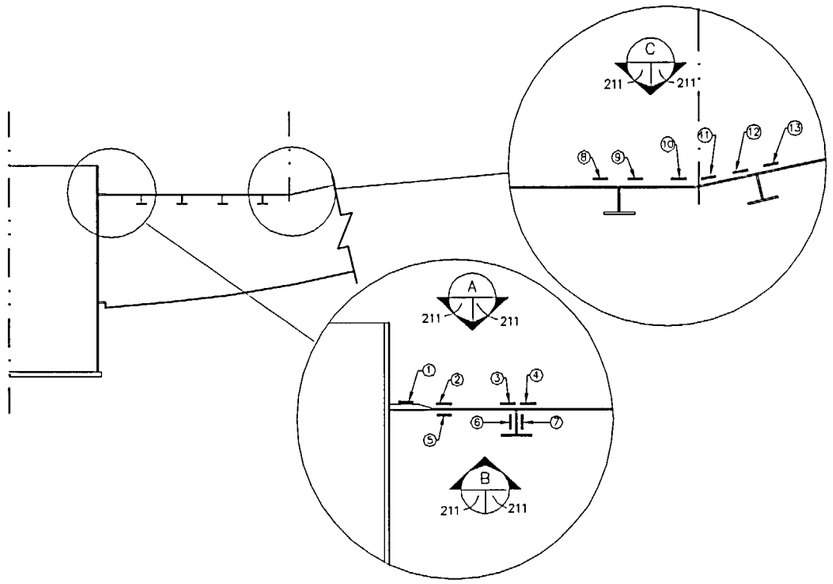

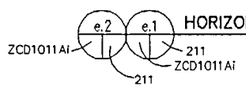

HORIZONTAL PLAN VIEW OF LINER AT A/L

INSTRUMENTATION ID #		
Detail #	e.1	e.2
Azimuth	58	70
Elevation	4525	4525
Liner #	2-2A	2-2A
Instr. #		
1	LSI-C-C5-02	LSI-C-C5-12
2	LSI-C-C5-03	LSI-C-C5-13
3	LSI-C-C5-04	LSI-C-C5-14
4	LSI-C-C5-05	LSI-C-C5-15
5	LSO-C-C5-01	LSO-C-C5-02
6	LSA-R-C5-01	~~LSA-R-C5-03~~ 2
7	LSA-R-C5-02	LSA-R-C5-04
8	~~LSI-C-C5-06~~	LSI-C-C5-16
9	~~LSI-C-C5-07~~	~~LSI-C-C5-17~~ 2
10	~~LSI-C-C5-08~~	LSI-C-C5-18
11	~~LSI-C-C5-09~~	LSI-C-C5-19
12	~~LSI-C-C5-10~~	LSI-C-C5-20
13	~~LSI-C-C5-11~~	LSI-C-C5-21

1

NOTE: CENTER LSA GAUGES ON ANCHOR WEB ORIENTED IN RADIAL DIRECTION. (HORIZONTAL)

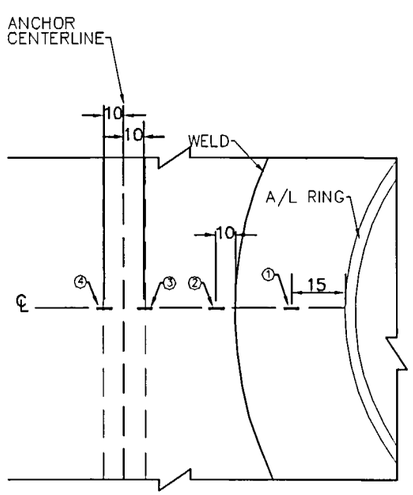

A INSIDE VIEW
211 211

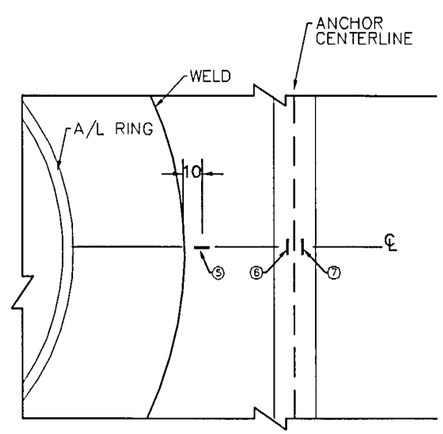

B OUTSIDE VIEW
211 211

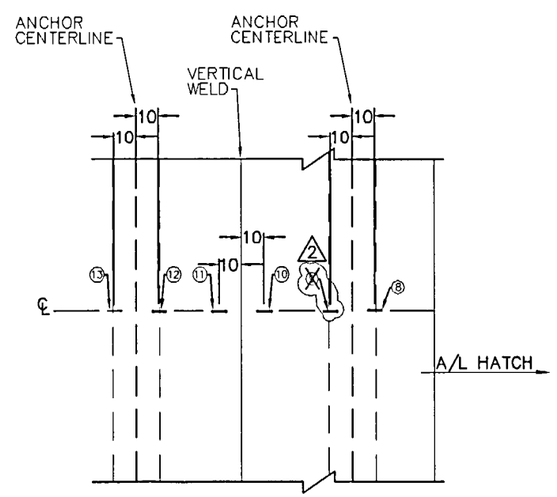

C INSIDE VIEW
211 211

REVISION					
NO.	DATE	DRAWN BY	CHECKED BY	APPROVED BY	NOTES
0	Feb. 4, 1998	T. Martinez			
1	July 20, 1999	J. Tenorio			Removed Gages
2	Jan. 31, 2001	J. Tenorio			Addtnl Gages Removed

NUPEC/NRC PCCV STRUCTURAL BEHAVIOR TEST MODEL

DRAWING NO.		SCALE
D-SN-P-211	INSTRUMENTED LINER DETAILS DETAIL e	1/1

SANDIA NATIONAL LABORATORIES FACILITIES ENGINEERING
ALBUQUERQUE, NEW MEXICO; LIVERMORE, CALIFORNIA; TONOPAH, NEVADA

FILE NAME: DSNP211

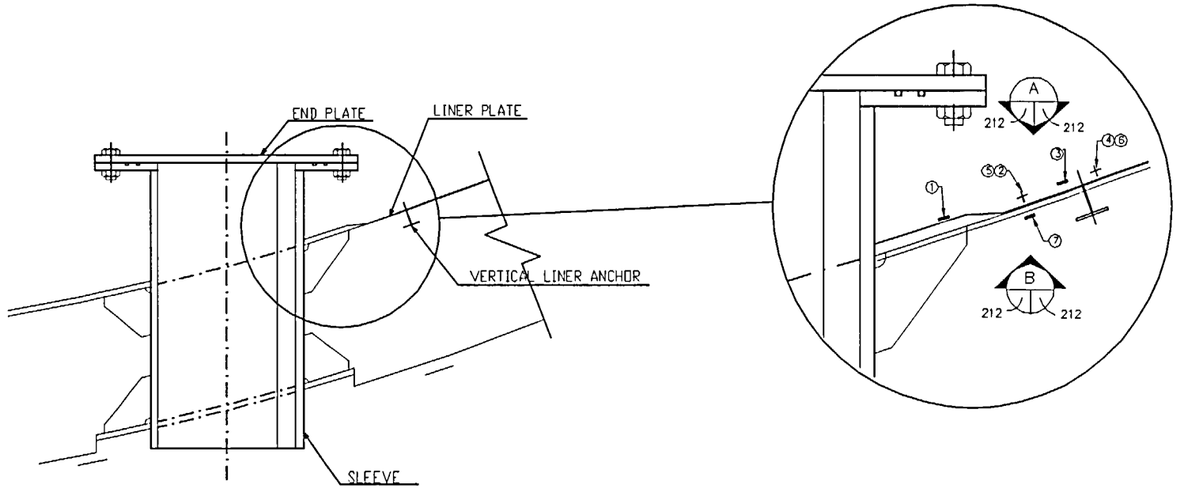

INSTRUMENTATION ID #				
Detail #	f.1	f.2	f.3	f.4
Azimuth	160	200	165	195
Elevation	4975	4975	2450	2450
Liner #	3-7C	3-7C	2-6C	2-6C
Instr. #				
①	LSI-C-F5-02	LSI-C-H5-02	LSI-C-F4-01	LSI-C-H4-01
②	LSI-C-F5-03	LSI-C-H5-03	LSI-C-F4-02	LSI-C-H4-02
③	LSI-C-F5-04	LSI-C-H5-04	LSI-C-F4-03	LSI-C-H4-03
④	LSI-C-F5-05	LSI-C-H5-05	LSI-C-F4-04	LSI-C-H4-04
⑤	LSI-M-F5-02	LSI-M-H5-02	LSI-M-F4-01	LSI-M-H4-01
⑥	LSI-M-F5-03	LSI-M-H5-03	LSI-M-F4-02	LSI-M-H4-02
⑦	LSO-C-F5-01	LSO-C-H5-01	LSO-C-F4-01	LSO-C-H4-01

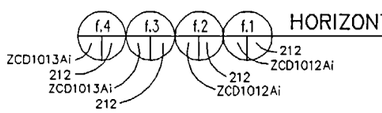

HORIZONTAL PLAN VIEW OF LINER AT M/S AND F/W

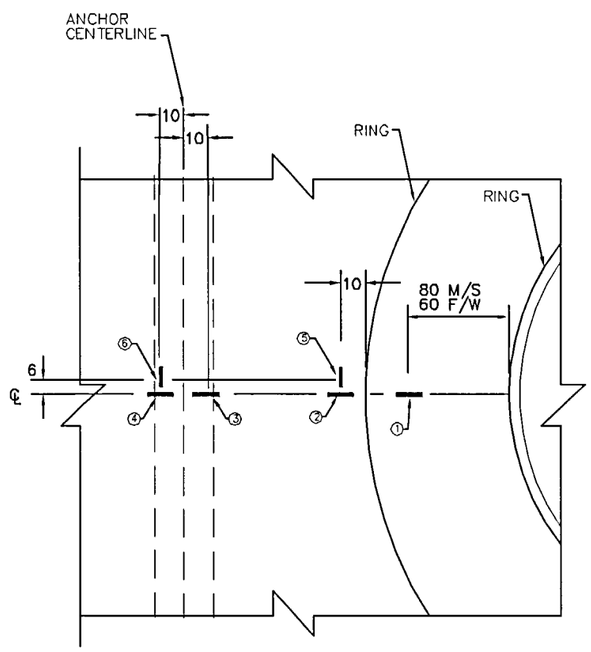

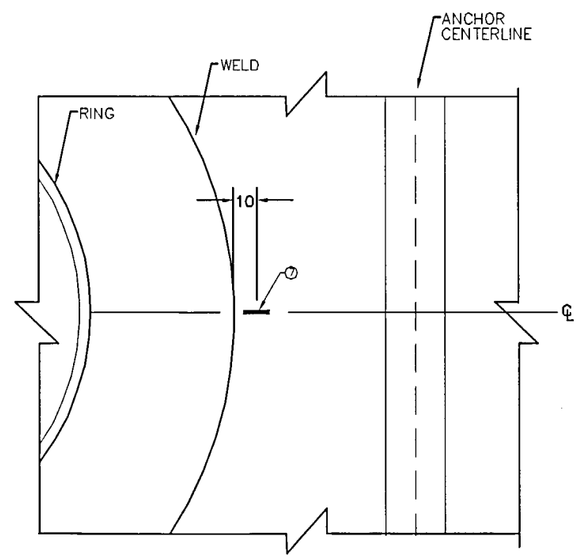

A INSIDE VIEW
212 212

B OUTSIDE VIEW
212 212

REVISION					
NO.	DATE	DRAWN BY	CHECKED BY	APPROVED BY	NOTES
0	Feb 4,1998	T. Martinez			
1	July 20,1999	J. Tenorio			Drawing Numbers

NUPEC/NRC PCCV STRUCTURAL BEHAVIOR TEST MODEL

DRAWING NO. D-SN-P-212 | INSTRUMENTED LINER DETAILS DETAIL f | SCALE 1/1

SANDIA NATIONAL LABORATORIES FACILITIES ENGINEERING
ALBUQUERQUE, NEW MEXICO; LIVERMORE, CALIFORNIA; TONOPAH, NEVADA

FILE NAME: DSNP212

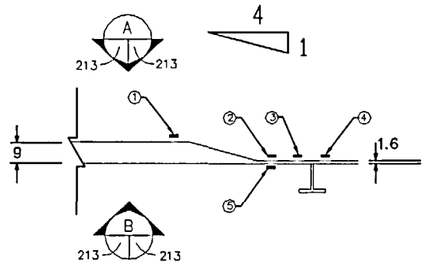

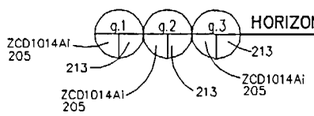

HORIZONTAL PLAN VIEW OF CRANE BRACKET THICKENED PLATE

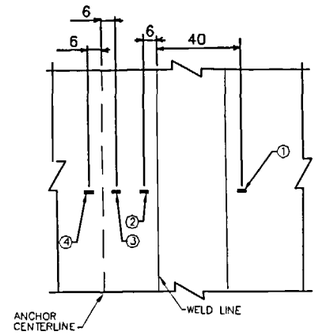

INSIDE VIEW

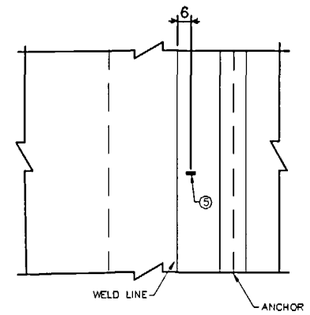

OUTSIDE VIEW

INSTRUMENTATION ID #			
Detail #	g.1	g.2	g.3
Azimuth	200	220	225
Elevation	9600	9600	9600
Liner #	5-9A	5-9E	5-9E
Instr. #			
①	LSI-C-G8-01	LSI-C-H8-01	LSI-C-H8-05
②	LSI-C-G8-02	LSI-C-H8-02	LSI-C-H8-06
③	LSI-C-G8-03	LSI-C-H8-03	LSI-C-H8-07
④	LSI-C-G8-04	LSI-C-H8-04	LSI-C-H8-08
⑤	LSO-C-G8-01	LSO-C-H8-01	LSO-C-H8-02

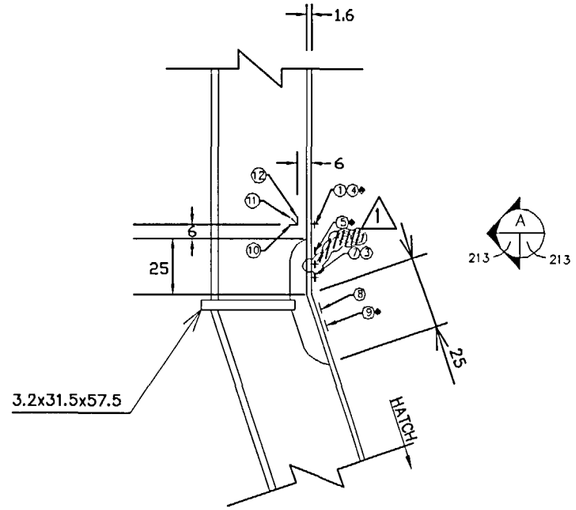

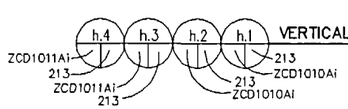

VERTICAL LINER DETAIL NEAR E/H AND A/L

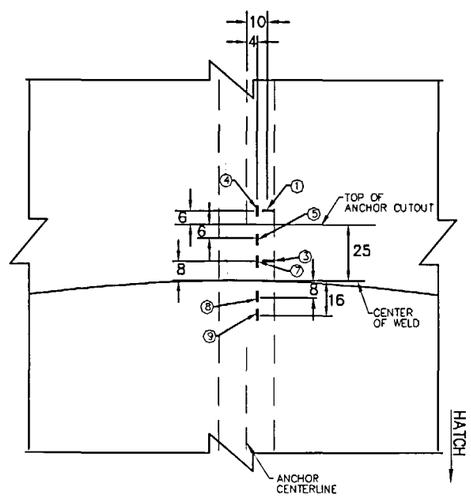

INSIDE VIEW

INSTRUMENTATION ID #				
Detail #	h.1	h.2	h.3	h.4
Azimuth	324	324	62	62
Elevation	2446	6904	3575	5475
Liner #	2-11D/2-11E	3-11B/3-11A	2-2B/2-2C	3-3D/3-3C
Instr. #				
①	LSI-C-L4-02	~~LSI-C-L6-02~~	~~LSI-C-C4-01~~	~~LSI-C-C6-01~~
②	~~LSI-C-L4-03~~	~~LSI-C-L6-03~~	~~LSI-C-C4-02~~	~~LSI-C-C6-02~~
③	LSI-C-L4-04	LSI-C-L6-04	LSI-C-C4-03	LSI-C-C6-03
④	LSI-M-L4-02	~~LSI-M-L6-02~~	~~LSI-M-C4-01~~	~~LSI-M-C6-01~~
⑤	LSI-M-L4-03	~~LSI-M-L6-03~~	~~LSI-M-C4-02~~	~~LSI-M-C6-02~~
⑥	~~LSI-M-L4-04~~	~~LSI-M-L6-04~~	~~LSI-M-C4-03~~	~~LSI-M-C6-03~~
⑦	LSI-M-L4-05	LSI-M-L6-05	LSI-M-C4-04	LSI-M-C6-04
⑧	LSI-M-L4-06	LSI-M-L6-06	LSI-M-C4-05	LSI-M-C6-05
⑨	LSI-M-L4-07	~~LSI-M-L6-07~~	~~LSI-M-C4-06~~	~~LSI-M-C6-06~~
⑩	LRA-R-L4-1r	LRA-R-L6-1r	LRA-R-C4-1r	LRA-R-C6-1r
⑪	LRA-R-L4-1d	LRA-R-L6-1d	LRA-R-C4-1d	LRA-R-C6-1d
⑫	LRA-R-L4-1m	LRA-R-L6-1m	LRA-R-C4-1m	LRA-R-C6-1m

1 ◆ = BELOW E/H ONLY

REVISION					
NO.	DATE	DRAWN BY	CHECKED BY	APPROVED BY	NOTES
0	Feb 4, 1998	T. Martinez			
1	July 20, 1999	J. Tenorio			Gages Removed

NUPEC/NRC PCCV STRUCTURAL BEHAVIOR TEST MODEL

DRAWING NO.		SCALE
D-SN-P-213	INSTRUMENTED LINER DETAILS DETAIL g & h	1/1

SANDIA NATIONAL LABORATORIES FACILITIES ENGINEERING
ALBUQUERQUE, NEW MEXICO; LIVERMORE, CALIFORNIA; TONOPAH, NEVADA

FILE NAME: DSNP213

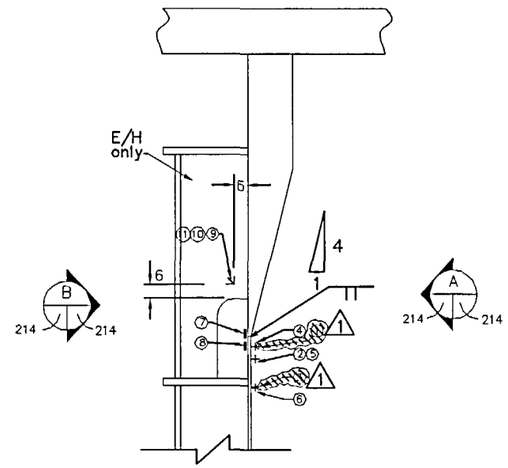

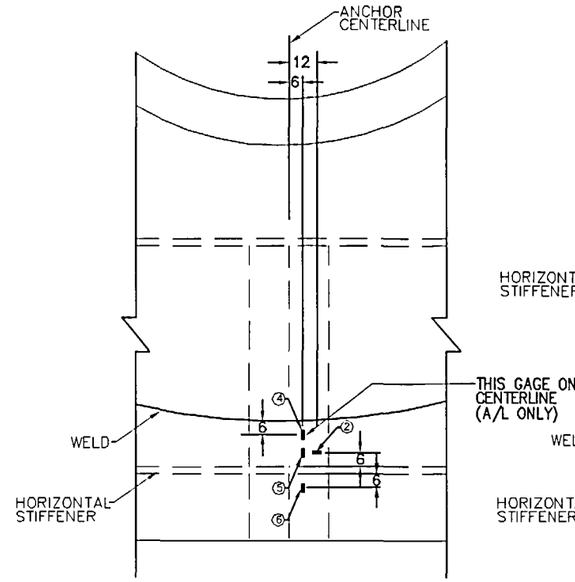

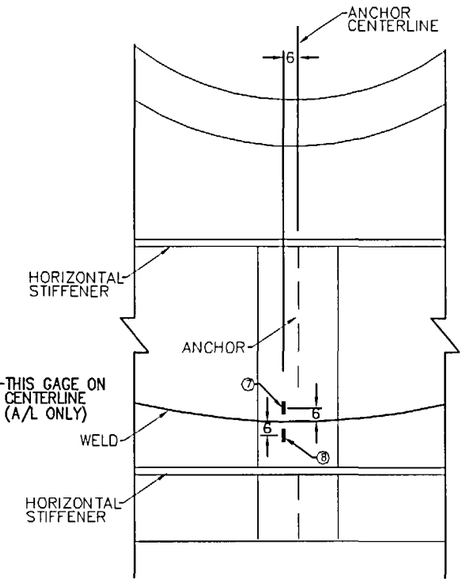

INSTRUMENTATION ID #				
Detail #	i.1	i.2	i.3	i.4
Azimuth	324	324	62	62
Elevation	3782	5568	4153	4897
Liner #	2-11C	3-11C	2-2A	3-3D
Instr. #				
①	~~LSI-C-L5-02~~	~~LSI-C-L5-05~~	~~LSI-C-C5-22~~	~~LSI-C-C5-25~~ 1
②	LSI-C-L5-03	LSI-C-L5-06	LSI-C-C5-23	LSI-C-C5-26
③	~~LSI-C-L5-04~~	~~LSI-C-L5-07~~	~~LSI-C-C5-24~~	~~LSI-C-C5-27~~ 1
④	LSI-M-L5-02	LSI-M-L5-05	LSI-M-C5-02	LSI-M-C5-05
⑤	LSI-M-L5-03	LSI-M-L5-06	LSI-M-C5-03	LSI-M-C5-06
⑥	LSI-M-L5-04	LSI-M-L5-07	LSI-M-C5-04	LSI-M-C5-07
⑦	LSO-M-L5-01	LSO-M-L5-03	LSO-M-C5-01	LSO-M-C5-03
⑧	LSO-M-L5-02	LSO-M-L5-04	LSO-M-C5-02	LSO-M-C5-04
⑨	LRA-R-L5-1r	LRA-R-L5-2r	N/A	N/A
⑩	LRA-R-L5-1d	LRA-R-L5-2d	N/A	N/A
⑪	LRA-R-L5-1m	LRA-R-L5-2m	N/A	N/A

i.4 i.3 i.2 i.1 VERTICAL LINER TO INSERT PLATE DETAIL NEAR E/H AND A/L

ZCD1011Ai 214 ZCD1011Ai 214 214 ZCD1010Ai 214 ZCD1010Ai

A 214 214 INSIDE VIEW

B 214 214 OUTSIDE VIEW

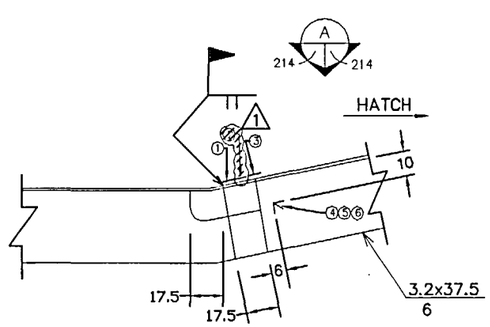

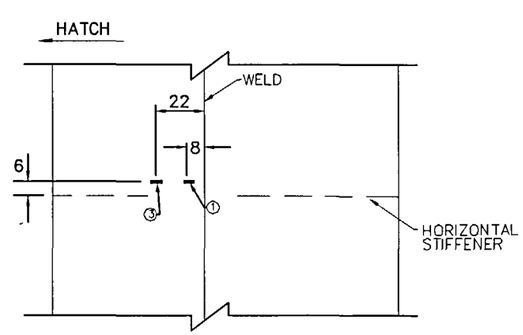

INSTRUMENTATION ID #		
Detail #	j1	j2
Azimuth	305	340
Elevation	4700	4700
Liner #	2-10A	2-12A
Instr. #		
①	LSI-C-K5-12	LSI-C-A5-12
②	~~LSI-C-K5-13~~	~~LSI-C-A5-13~~ 1
③	LSI-C-K5-14	LSI-C-A5-14
④	LRS-R-K5-1r	LRS-R-A5-1r
⑤	LRS-R-K5-1d	LRS-R-A5-1d
⑥	LRS-R-K5-1h	LRS-R-A5-1h

j.2 j.1 HORIZONTAL PLAN VIEW OF LINER CONNECTION NEAR E/H

ZCD1010Ai 214 214 ZCD1010Ai

A 214 214 INSIDE VIEW

REVISION					
NO.	DATE	DRAWN BY	CHECKED BY	APPROVED BY	NOTES
0	Feb.4, 1998	T. Martinez			
1	July 20, 1999	J. Tenorio			Removed Gages

NUPEC/NRC PCCV STRUCTURAL BEHAVIOR TEST MODEL

DRAWING NO. D-SN-P-214 | INSTRUMENTED LINER DETAILS DETAIL i & j | SCALE 1/1

SANDIA NATIONAL LABORATORIES FACILITIES ENGINEERING
ALBUQUERQUE, NEW MEXICO: LIVERMORE, CALIFORNIA: TONOPAH, NEVADA

FILE NAME: DSNP214

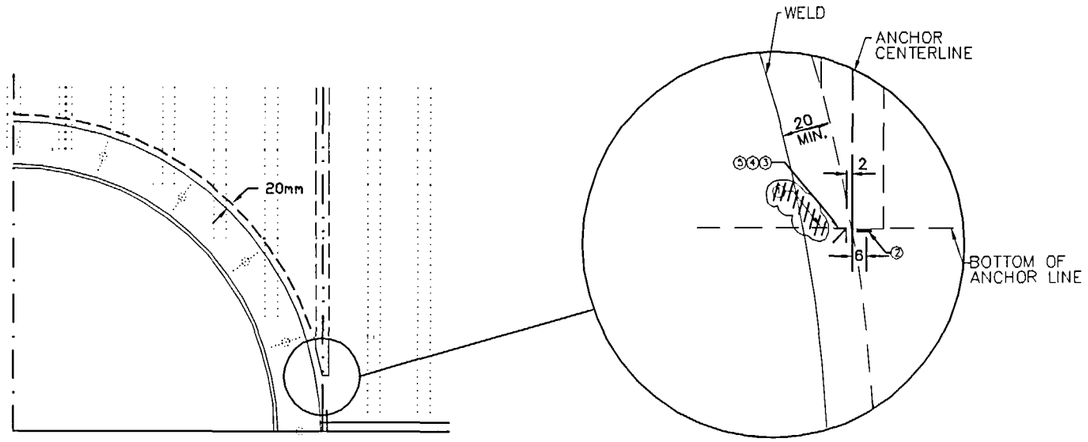

INSTRUMENTATION ID #							
Detail #	k.1	k.2	k.3	k.4	k.5	k.6	k.7
Azimuth	314	334	58	162	164	314	198
Elevation	4550	4800	4700	5200	2600	4800	5200
Liner #	2-11A	3-11E	2-2A	3-7C	2-6C	3-11D	3.7C
Instr. #							
①	~~LSI-C-L5-08~~	~~LSI-C-L5-10~~	~~LSI-C-C5-28~~	~~LSI-C-F5-06~~	~~LSI-C-F4-05~~	~~LSI-C-L5-16~~	~~LSI-C-H5-05~~
②	LSI-C-L5-09	LSI-C-L5-11	LSI-C-C5-29	LSI-C-F5-07	LSI-C-F4-06	LSI-C-L5-23	LSI-C-H5-07
③	LRI-M-L5-1h	LRI-M-L5-2h	LRI-M-C5-1h	LRI-M-F5-1h	LRI-M-F4-1h	LRI-M-L5-5h	LRI-M-H5-1h
④	LRI-M-L5-1d	LRI-M-L5-2d	LRI-M-C5-1d	LRI-M-F5-1d	LRI-M-F4-1d	LRI-M-L5-5d	LRI-M-H5-1d
⑤	LRI-M-L5-1m	LRI-M-L5-2m	LRI-M-C5-1m	LRI-M-F5-1m	LRI-M-F4-1m	LRI-M-L5-5m	LRI-M-H5-1m

1

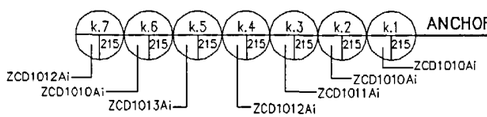

ANCHOR TERMINATIONS ON LINER NEAR E/H, A/L, M/S, AND F/W THICKENED PLATE

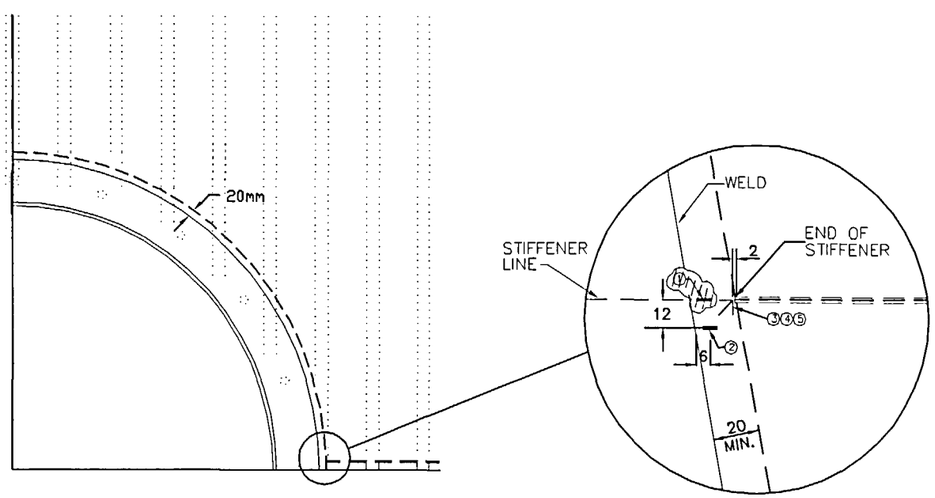

INSTRUMENTATION ID #					
Detail #	l.1	l.2	l.3	l.4	l.5
Azimuth	334	314	58	66	165
Elevation	4700	4700	4600	4600	2350
Liner #	3-11D	3-11E	2-2A	2-2A	2-6C
Instr. #					
①	~~LSI-C-L5-12~~	~~LSI-C-L5-14~~	~~LSI-C-C5-30~~	~~LSI-C-C5-32~~	~~LSI-C-F4-07~~
②	LSI-C-L5-13	LSI-C-L5-15	LSI-C-C5-31	LSI-C-C5-33	LSI-C-F4-08
③	LRI-M-L5-3h	LRI-M-L5-4h	LRI-M-C5-2h	LRI-M-C5-3h	LRI-M-F4-2h
④	LRI-M-L5-3d	LRI-M-L5-4d	LRI-M-C5-2d	LRI-M-C5-3d	LRI-M-F4-2d
⑤	LRI-M-L5-3m	LRI-M-L5-4m	LRI-M-C5-2m	LRI-M-C5-3m	LRI-M-F4-2m

1

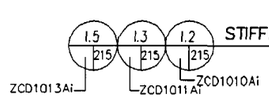

STIFFENER TERMINATIONS ON LINER NEAR E/H, A/L AND F/W THICKENED PLATE

REVISION					
NO	DATE	DRAWN BY	CHECKED BY	APPROVED BY	NOTES
0	Feb 6, 1998	T. Martinez			
1	July 20, 1998	J. Tenorio			Modified Gages

NUPEC/NRC PCCV STRUCTURAL BEHAVIOR TEST MODEL

DRAWING NO.		SCALE
D-SN-P-215	INSTRUMENTED LINER DETAILS DETAIL k & l	1/1

SANDIA NATIONAL LABORATORIES FACILITIES ENGINEERING
ALBUQUERQUE, NEW MEXICO; LIVERMORE, CALIFORNIA; TONOPAH, NEVADA

FILE NAME: DSNP215

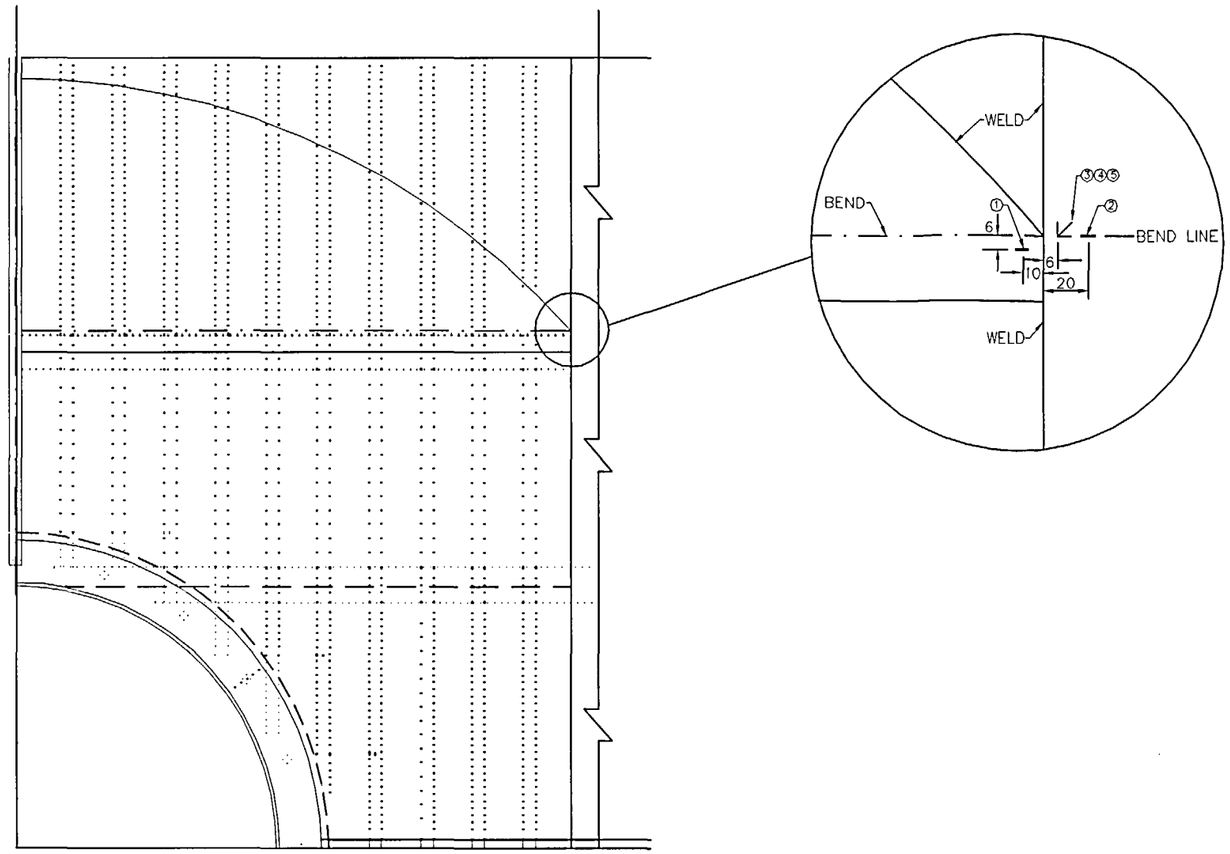

INSTRUMENTATION ID #				
Detail #	m-1	m-2	~~m-3~~	m-4
Azimuth	310	310	~~50~~	70
Elevation	3200	6150	~~3075~~	5175
Liner #	2-11D/2-12B	3-11B/3-12B	~~2-7A/2-1A~~	3-3D/3-2C
Instr. #				
①	LSI-C-A4-01	LSI-C-A6-01	~~LSI-C-C5-34~~	LSI-C-C5-36
②	LSI-C-A4-02	LSI-C-A6-02	~~LSI-C-C5-35~~	LSI-C-C5-37
③	LPI-M-A4-1h	LRI-M-A6-1h	~~LRI-M-C5-4h~~	LRI-M-C5-5h
④	LRI-M-A4-1d	LRI-M-A6-1d	~~LRI-M-C5-4d~~	LRI-M-C5-5d
⑤	LRI-M-A4-1m	LRI-M-A6-1m	~~LRI-M-C5-4m~~	LRI-M-C5-5m

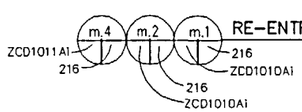

RE-ENTRANT CORNERS OF LINER AT E/H AND A/L WALL ENBOSSMENTS

REVISION					
NO	DATE	DRAWN BY	CHECKED BY	APPROVED BY	NOTES
0	Feb. 4, 1998	T. Martinez			
1	July 20, 1999	J. Tenorio			Removed Gages

NUPEC/NRC PCCV STRUCTURAL BEHAVIOR TEST MODEL

DRAWING NO.		SCALE
D-SN-P-216	INSTRUMENTED LINER DETAILS DETAIL m	1/1

SANDIA NATIONAL LABORATORIES FACILITIES ENGINEERING
ALBUQUERQUE, NEW MEXICO; LIVERMORE, CALIFORNIA; TONOPAH, NEVADA

FILE NAME: DSNP216

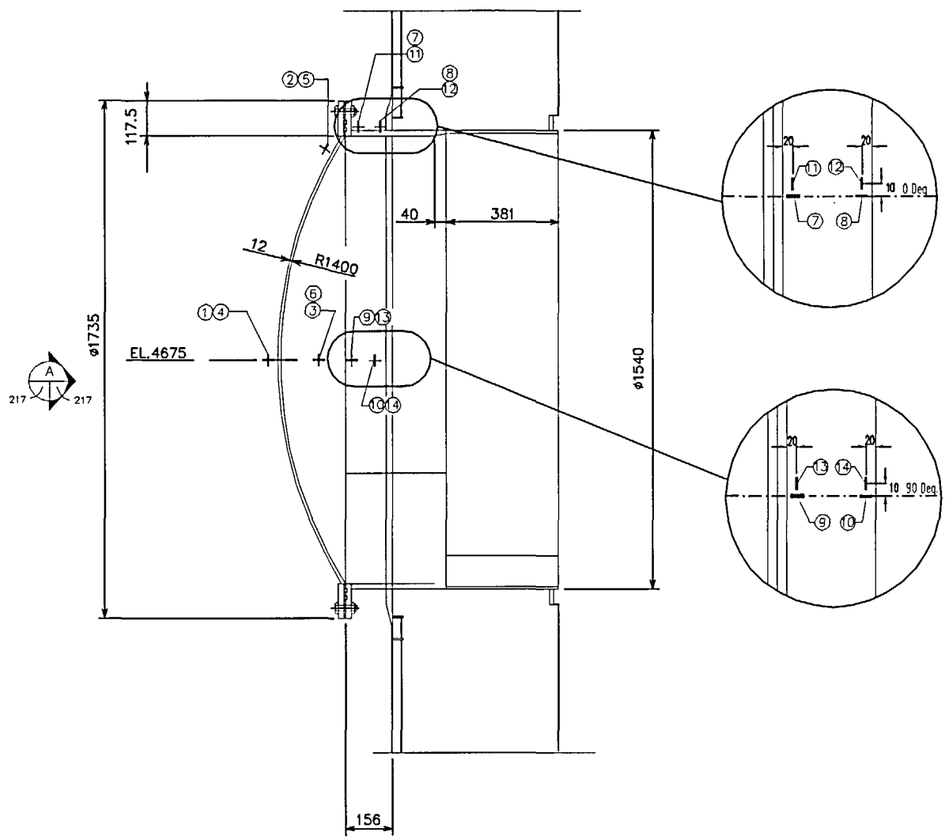

n.1 E/H DETAIL
ZCD1010AI 217

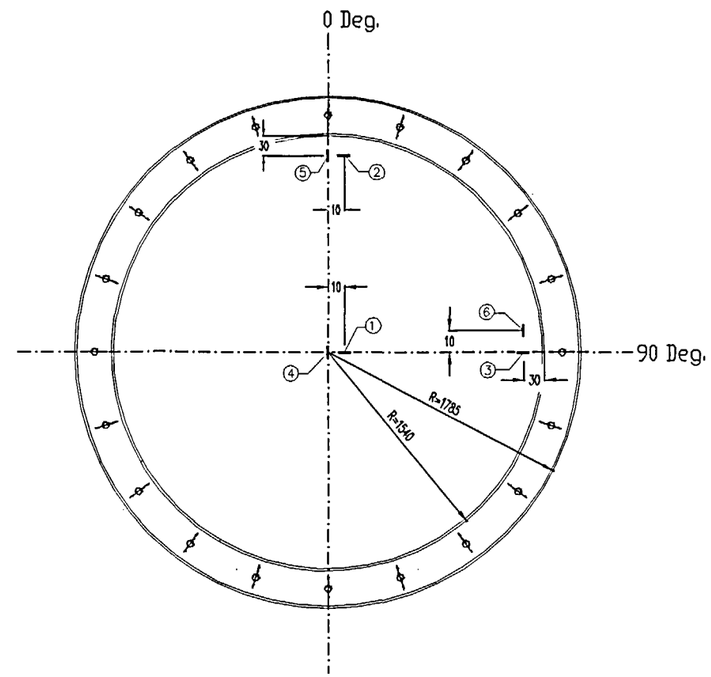

INSIDE VIEW

INSTRUMENTATION ID #				
Instr. #	Detail #	Azimuth	Elevation (mm)	Radial Dist.(mm)
①	LSI-C-L5-16	324	4675	4850
②	LSI-C-L5-17	324	5460	4930
③	LSI-C-L5-18	333	4675	4930
④	LSI-M-L5-08	324	4675	4850
⑤	LSI-M-L5-09	324	5460	4930
⑥	LSI-M-L5-10	333	4675	4930
⑦	LSI-M-L5-11	324	5460	4980
⑧	LSI-M-L5-12	324	5460	5030
⑨	LSI-M-L5-13	333	4675	4980
⑩	LSI-M-L5-14	333	4675	5030
⑪	LSI-C-L5-19	324	5460	4980
⑫	LSI-C-L5-20	324	5460	5030
⑬	LSI-C-L5-21	333	4675	4980
⑭	LSI-C-L5-22	333	4675	5030

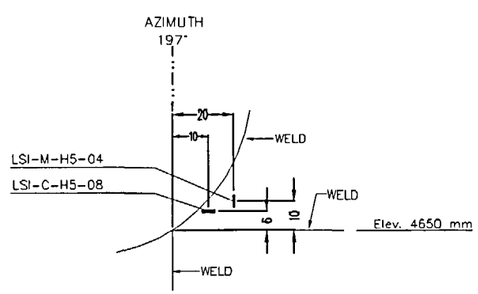

o.1 M/S CORNER WELD DETAIL (INSIDE VIEW)
217 217

REVISION					
NO	DATE	DRAWN BY	CHECKED BY	APPROVED BY	NOTES
0	Feb.4, 1998	J. Tenorio			
1	July 30, 1998	J. Tenorio			Add Detail O.1

NUPEC/NRC PCCV STRUCTURAL BEHAVIOR TEST MODEL

DRAWING NO.		SCALE
D-SN-P-217	INSTRUMENTATION LINER DETAILS DETAIL - n	1/6

SANDIA NATIONAL LABORATORIES FACILITIES ENGINEERING
ALBUQUERQUE, NEW MEXICO; LIVERMORE, CALIFORNIA; TONOPAH, NEVADA

FILE NAME: DSNP217

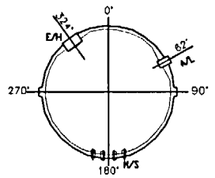

KEY PLAN

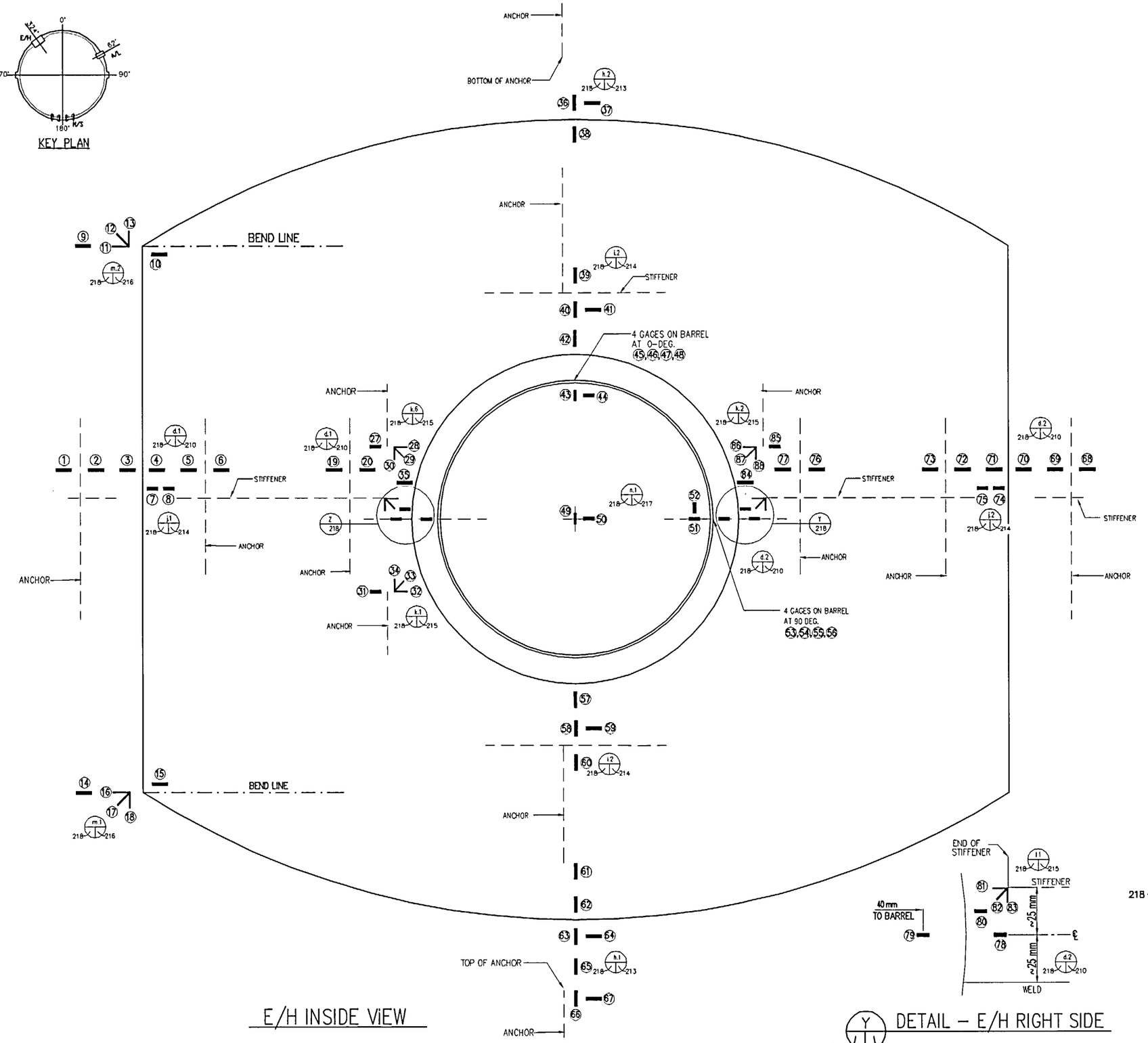

E/H INSIDE VIEW

INSTRUMENTATION GAGES					
Instr. #	Labeling I.D. (Name)	Details Drawing # D-SN-P-	Instr. #	Labeling I.D. (Name)	Details Drawing # D-SN-P-
1	LSI-C-K5-11	210/(d.1)	46	LSI-M-L5-12	217/(n.1)
2	LSI-C-K5-10	210/(d.1)	47	LSI-C-L5-19	217/(n.1)
3	LSI-C-K5-09	210/(d.1)	48	LSI-C-L5-20	217/(n.1)
4	LSI-C-K5-08	210/(d.1)	49	LSI-M-L5-08	217/(n.1)
5	LSI-C-K5-07	210/(d.1)	50	LSI-C-L5-16	217/(n.1)
6	LSI-C-K5-06	210/(d.1)	51	LSI-C-L5-18	217/(n.1)
7	LSI-C-K5-12	214/(j.1)	52	LSI-M-L5-10	217/(n.1)
8	LSI-C-K5-14	214/(j.1)	53	LSI-M-L5-13	217/(n.1)
9	LSI-C-A6-02	216/(m.2)	54	LSI-M-L5-14	217/(n.1)
10	LSI-C-A6-01	216/(m.2)	55	LSI-C-L5-21	217/(n.1)
11	LRI-M-A6-1h	216/(m.2)	56	LSI-C-L5-22	217/(n.1)
12	LRI-M-A6-1d	216/(m.2)	57	LSI-M-L5-02	214/(L1)
13	LRI-M-A6-1m	216/(m.2)	58	LSI-M-L5-03	214/(L1)
14	LSI-C-A4-02	216/(m.1)	59	LSI-C-L5-03	214/(L1)
15	LSI-C-A4-01	216/(m.1)	60	LSI-M-L5-04	214/(L1)
16	LRI-M-A4-1h	216/(m.1)	61	LSI-M-L4-07	213/(h.1)
17	LRI-M-A4-1d	216/(m.1)	62	LSI-M-L4-06	213/(h.1)
18	LRI-M-A4-1m	216/(m.1)	63	LSI-M-L4-05	213/(h.1)
19	LSI-C-K5-05	210/(d.1)	64	LSI-C-L4-04	213/(h.1)
20	LSI-C-K5-04	210/(d.1)	65	LSI-M-L4-03	213/(h.1)
21	LSI-C-K5-03	210/(d.1)	66	LSI-M-L4-02	213/(h.1)
22	LSI-C-K5-02	210/(d.1)	67	LSI-C-L4-02	213/(h.1)
23	LSI-C-L5-15	215/(l.2)	68	LSI-C-A5-11	210/(d.2)
24	LRI-M-L5-4h	215/(l.2)	69	LSI-C-A5-10	210/(d.2)
25	LRI-M-L5-4d	215/(l.2)	70	LSI-C-A5-09	210/(d.2)
26	LRI-M-L5-4m	215/(l.2)	71	LSI-C-A5-08	210/(d.2)
27	LSI-C-L5-23	215/(k.6)	72	LSI-C-A5-07	210/(d.2)
28	LRI-M-L5-5h	215/(k.6)	73	LSI-C-A5-06	210/(d.2)
29	LRI-M-L5-5d	215/(k.6)	74	LSI-C-A5-12	214/(j.2)
30	LRI-M-L5-5m	215/(k.6)	75	LSI-C-A5-14	214/(j.2)
31	LSI-C-L5-09	215/(k.1)	76	LSI-C-A5-05	210/(d.2)
32	LRI-M-L5-1h	215/(k.1)	77	LSI-C-A5-04	210/(d.2)
33	LRI-M-L5-1d	215/(k.1)	78	LSI-C-A5-03	210/(d.2)
34	LRI-M-L5-1m	215/(k.1)	79	LSI-C-A5-02	210/(d.2)
35	LSI-C-K5-15	210/(d.1)	80	LSI-C-L5-13	215/(l.1)
36	LSI-M-L6-05	213/(h.2)	81	LRI-M-L5-3h	215/(l.1)
37	LSI-C-L6-04	213/(h.2)	82	LRI-M-L5-3d	215/(l.1)
38	LSI-M-L6-06	213/(h.2)	83	LRI-M-L5-3m	215/(l.1)
39	LSI-M-L5-07	214/(L2)	84	LSI-C-A5-15	210/(d.2)
40	LSI-M-L5-06	214/(L2)	85	LSI-C-L5-11	215/(k.2)
41	LSI-C-L5-06	214/(L2)	86	LRI-M-L5-2h	215/(k.2)
42	LSI-M-L5-05	214/(L2)	87	LRI-M-L5-2d	215/(k.2)
43	LSI-M-L5-09	217/(n.1)	88	LRI-M-L5-2m	215/(k.2)
44	LSI-C-L5-17	217/(n.1)			
45	LSI-M-L5-11	217/(n.1)			

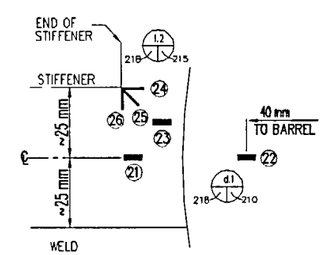

Z 218 218 DETAIL – E/H LEFT SIDE

Y 218 218 DETAIL – E/H RIGHT SIDE

REVISION					
NO.	DATE	DRAWN BY	CHECKED BY	APPROVED BY	NOTES
0	July 20, 1999	J. Tenorio			

NUPEC/NRC PCCV STRUCTURAL BEHAVIOR TEST MODEL

DRAWING NO. D-SN-P-218 | INTERIOR LINER GAGE LAYOUT E/H | SCALE NO SCALE

SANDIA NATIONAL LABORATORIES FACILITIES ENGINEERING
ALBUQUERQUE, NEW MEXICO; LIVERMORE, CALIFORNIA; TONOPAH, NEVADA

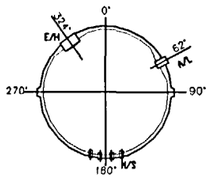

KEY PLAN

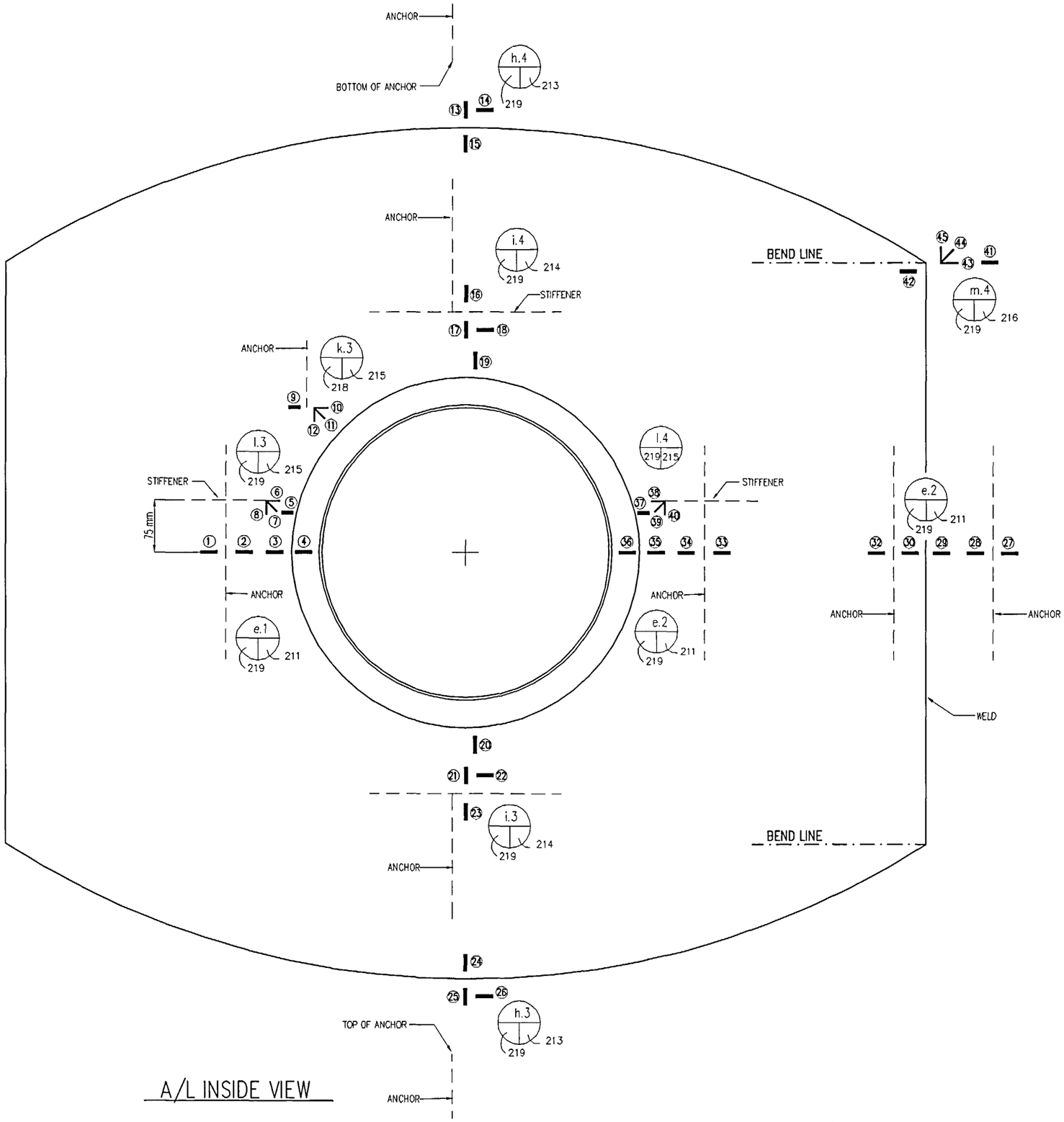

A/L INSIDE VIEW

INSTRUMENTATION GAGES					
Instr. #	Labeling I.D. (Name)	Details Drawing # D-SN-P-	Instr. #	Labeling I.D. (Name)	Details Drawing # D-SN-P-
1	LSI-C-C5-05	211/(e.1)	28	LSI-C-C5-20	211/(e.2)
2	LSI-C-C5-04	211/(e.1)	29	LSI-C-C5-19	211/(e.2)
3	LSI-C-C5-03	211/(e.1)	30	LSI-C-C5-18	211/(e.2)
4	LSI-C-C5-02	211/(e.1)	31	~~LSI-C-C5-17~~	~~211/(e.2)~~
5	LSI-C-C5-31	215/(l.3)	32	LSI-C-C5-16	211/(e.2)
6	LRI-M-C5-2h	215/(l.3)	33	LSI-C-C5-15	211/(e.2)
7	LRI-M-C5-2d	215/(l.3)	34	LSI-C-C5-14	211/(e.2)
8	LRI-M-C5-2m	215/(l.3)	35	LSI-C-C5-13	211/(e.2)
9	LSI-C-C5-29	215/(k.3)	36	LSI-C-C5-12	211/(e.2)
10	LRI-M-C5-1h	215/(k.3)	37	LSI-C-C5-33	215/(l.4)
11	LRI-M-C5-1d	215/(k.3)	38	LRI-M-C5-3h	215/(l.4)
12	LRI-M-C5-1m	215/(k.3)	39	LRI-M-C5-3d	215/(l.4)
13	LSI-M-C6-04	213/(h.4)	40	LRI-M-C5-3m	215/(l.4)
14	LSI-C-C6-03	213/(h.4)	41	LSI-C-C5-37	216/(m.4)
15	LSI-M-C6-05	213/(h.4)	42	LSI-C-C5-36	216/(m.4)
16	LSI-M-C5-07	214/(i.4)	43	LRI-M-C5-5h	216/(m.4)
17	LSI-M-C5-06	214/(i.4)	44	LRI-M-C5-5d	216/(m.4)
18	LSI-C-C5-26	214/(i.4)	45	LRI-M-C5-5m	216/(m.4)
19	LSI-M-C5-05	214/(i.4)			
20	LSI-M-C5-02	214/(i.3)			
21	LSI-M-C5-03	214/(i.3)			
22	LSI-C-C5-23	214/(i.3)			
23	LSI-M-C5-04	214/(i.3)			
24	LSI-M-C4-05	213/(h.3)			
25	LSI-M-C4-04	213/(h.3)			
26	LSI-C-C4-03	213/(h.3)			
27	LSI-C-C5-21	211/(e.2)			

REVISION					
NO	DATE	DRAWN BY	CHECKED BY	APPROVED BY	NOTES
0	July 28,1999	J. Tenorio			
1	Jan.31,2001	J. Tenorio			Remove Gage 31

NUPEC/NRC PCCV STRUCTURAL BEHAVIOR TEST MODEL

DRAWING NO.		SCALE
D-SN-P-219	INTERIOR LINER GAGE LAYOUT A/L	NO SCALE

SANDIA NATIONAL LABORATORIES FACILITIES ENGINEERING
ALBUQUERQUE, NEW MEXICO; LIVERMORE, CALIFORNIA; TONOPAH, NEVADA

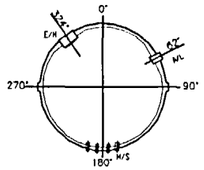

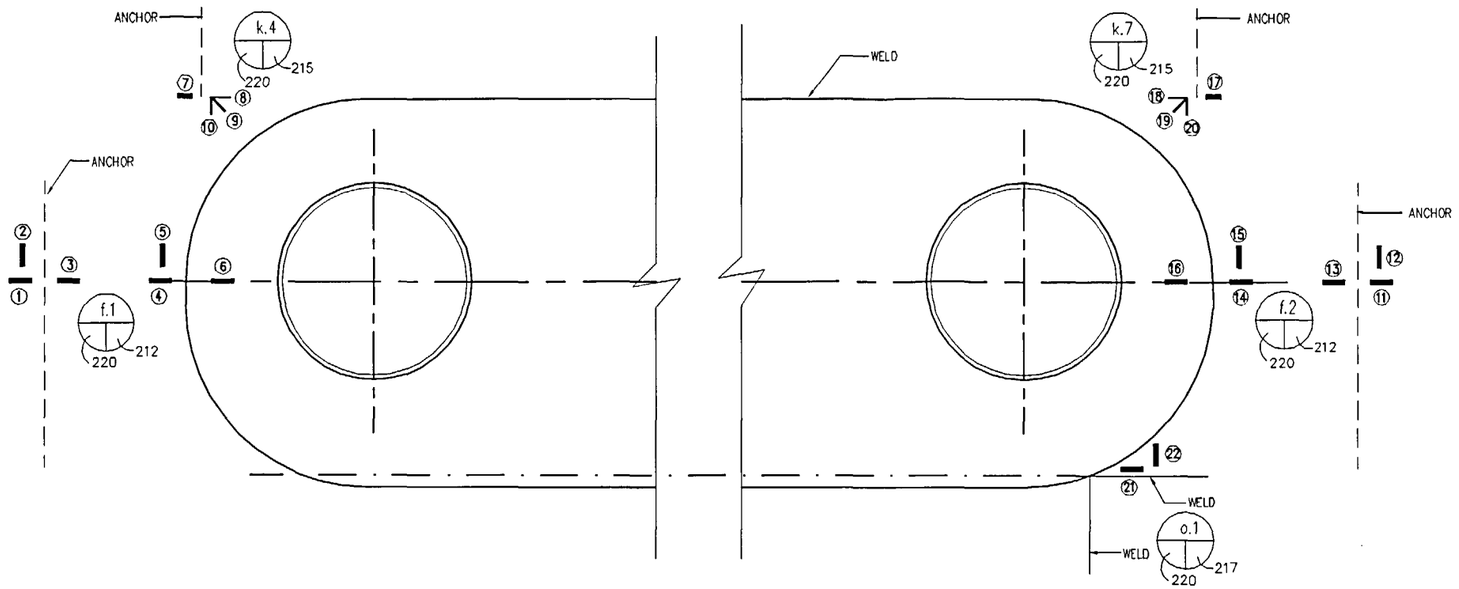

M/S – INSIDE VIEW

INSTRUMENTATION GAGES		
Instr.	Labeling	Details
#	I.D.	Drawing #
	(Name)	D-SN-P-
1	LSI-C-F5-05	212/(f.1)
2	LSI-M-F5-03	212/(f.1)
3	LSI-C-F5-04	212/(f.1)
4	LSI-C-F5-03	212/(f.1)
5	LSI-M-F5-02	212/(f.1)
6	LSI-C-F5-02	212/(f.1)
7	LSI-C-F5-07	215/(k.4)
8	LRI-M-F5-1h	215/(k.4)
9	LRI-M-F5-1d	215/(k.4)
10	LRI-M-F5-1m	215/(k.4)
11	LSI-C-H5-05	212/(f.2)
12	LSI-M-H5-03	212/(f.2)
13	LSI-C-H5-04	212/(f.2)
14	LSI-C-H5-03	212/(f.2)
15	LSI-M-H5-02	212/(f.2)
16	LSI-C-H5-02	212/(f.2)
17	LSI-C-H5-07	215/(k.7)
18	LRI-M-H5-1h	215/(k.7)
19	LRI-M-H5-1d	215/(k.7)
20	LRI-M-H5-1m	215/(k.7)
21	LSI-C-H5-08	217/(o.1)
22	LSI-M-H5-04	217/(o.1)

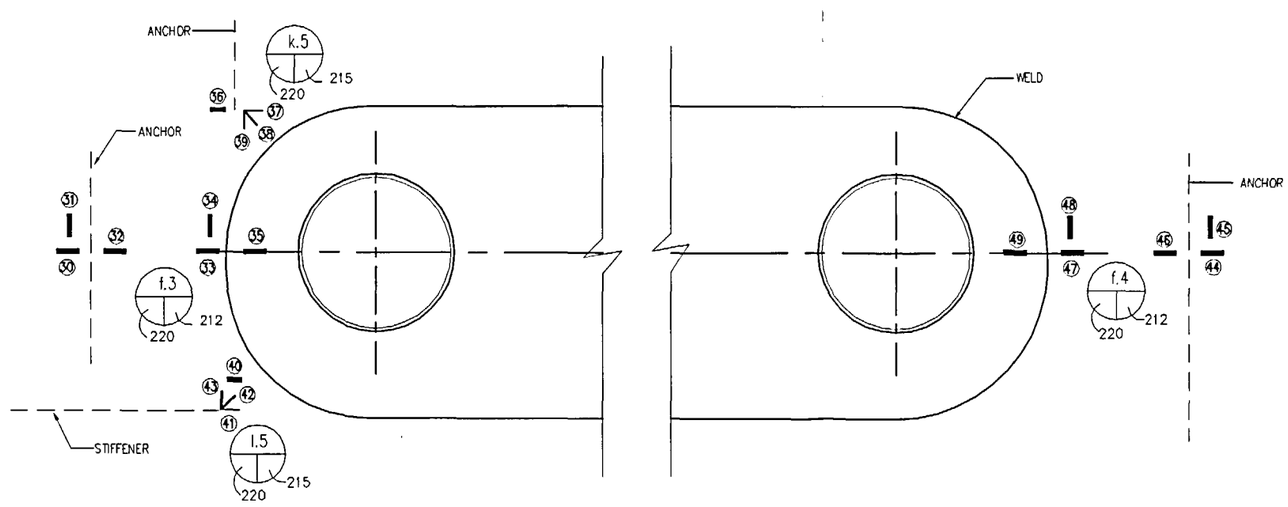

F/W – INSIDE VIEW

INSTRUMENTATION GAGES		
Instr.	Labeling	Details
#	I.D.	Drawing #
	(Name)	D-SN-P-
30	LSI-C-F4-04	212/(f.3)
31	LSI-M-F4-02	212/(f.3)
32	LSI-C-F4-03	212/(f.3)
33	LSI-C-F4-02	212/(f.3)
34	LSI-M-F4-01	212/(f.3)
35	LSI-C-F4-01	212/(f.3)
36	LSI-C-F4-06	215/(k.5)
37	LRI-M-F4-1h	215/(k.5)
38	LRI-M-F4-1d	215/(k.5)
39	LRI-M-F4-1m	215/(k.5)
40	LSI-C-F4-08	215/(L5)
41	LRI-M-F4-2h	215/(L5)
42	LRI-M-F4-2d	215/(L5)
43	LRI-M-F4-2m	215/(L5)
44	LSI-C-H4-04	212/(f.4)
45	LSI-M-H4-02	212/(f.4)
46	LSI-C-H4-03	212/(f.4)
47	LSI-C-H4-02	212/(f.4)
48	LSI-M-H4-01	212/(f.4)
49	LSI-C-H4-01	212/(f.4)

REVISION					
NO.	DATE	DRAWN BY	CHECKED BY	APPROVED BY	NOTES
0	July 30, 1998	J. Tenorio			

NUPEC/NRC PCCV STRUCTURAL BEHAVIOR TEST MODEL

DRAWING NO.		SCALE
D-SN-P-220	INTERIOR LINER GAGE LAYOUT M/S AND F/W	NO SCALE

SANDIA NATIONAL LABORATORIES FACILITIES ENGINEERING
ALBUQUERQUE, NEW MEXICO; LIVERMORE, CALIFORNIA; TONOPAH, NEVADA

FILE NAME: ZCD1012a

Appendix F: Prestressed Concrete Containment Vessel Data Acquisition System/Instrumentation Schematic

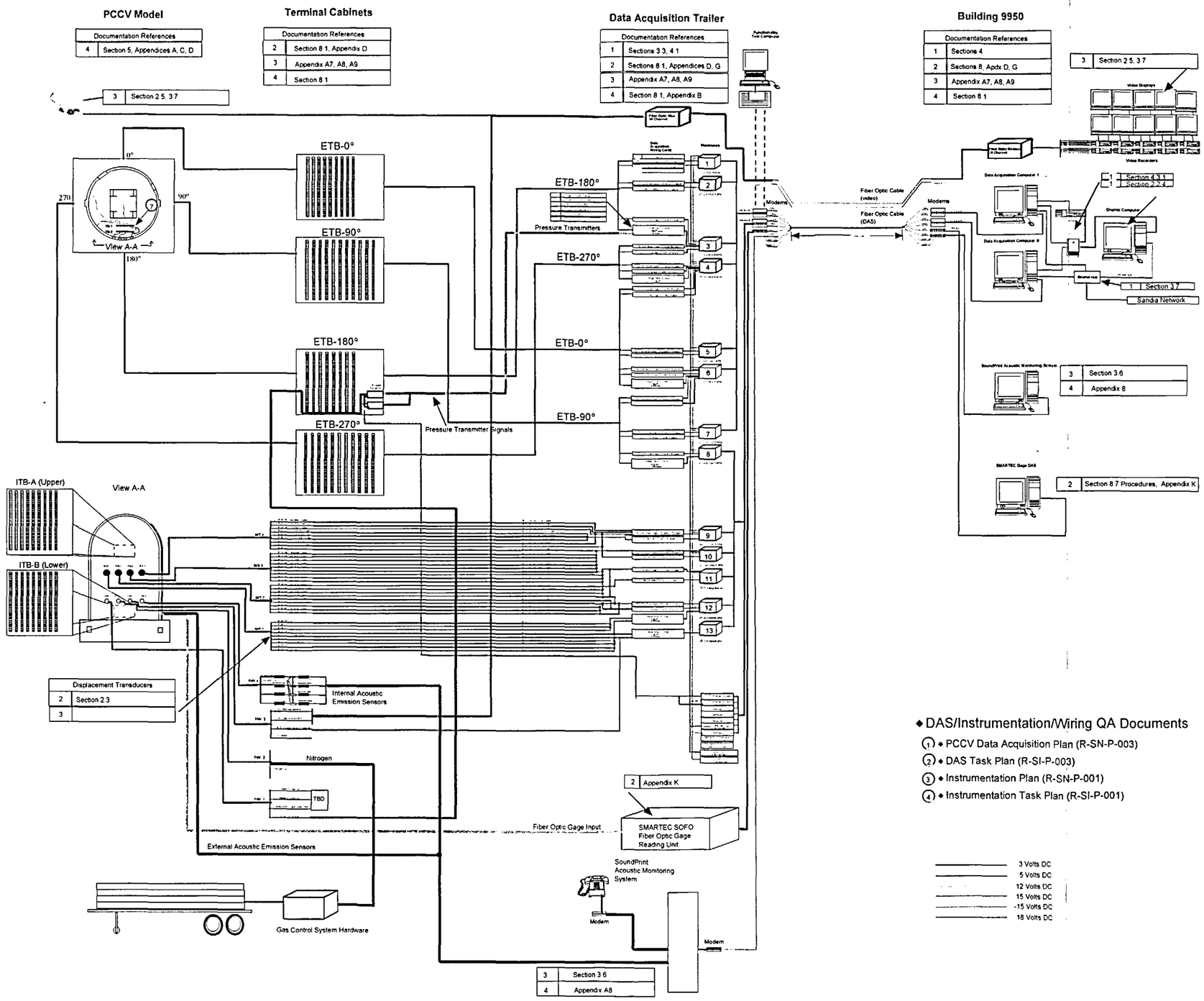
PCCV Model
Documentation References
4 Section 5, Appendices A, C, D
3 Section 2.5, 3.7
0°
90°
180°
270°
View A-A
Terminal Cabinets
Documentation References
2 Section 8.1, Appendix D
3 Appendix A7, A8, A9
4 Section 8.1
ETB-0°
ETB-90°
ETB-180°
ETB-270°
Pressure Transmitters
Pressure Transmitter Signals
Data Acquisition Trailer
Documentation References
1 Sections 3.3, 4.1
2 Sections 8.1, Appendices D, G
3 Appendix A7, A8, A9
4 Section 8.1, Appendix B
Modems
Fiber Optic Cable (video)
Fiber Optic Cable (DAS)
Building 9950
Documentation References
1 Sections 4
2 Sections 8, Apdx D, G
3 Appendix A7, A8, A9
4 Section 8.1
3 Section 2.5, 3.7
Video Displays
Video Recorders
Data Acquisition Computer I
Data Acquisition Computer II
Display Computer
1 Section 4.3.1
1 Section 2.2.4
1 Section 3.7
Sandia Network
3 Section 3.6
4 Appendix 8
2 Section 8.7 Procedures, Appendix K
ITB-A (Upper)
ITB-B (Lower)
View A-A
Displacement Transducers
2 Section 2.3
3
Internal Acoustic Emission Sensors
Nitrogen
TBD
External Acoustic Emission Sensors
Fiber Optic Gage Input
2 Appendix K
SMARTEC SOFO Fiber Optic Gage Reading Unit
SoundPrint Acoustic Monitoring System
Modem
Gas Control System Hardware
3 Section 3.6
4 Appendix A8
◆ DAS/Instrumentation/Wiring QA Documents
1 ◆ PCCV Data Acquisition Plan (R-SN-P-003)
2 ◆ DAS Task Plan (R-SI-P-003)
3 ◆ Instrumentation Plan (R-SN-P-001)
4 ◆ Instrumentation Task Plan (R-SI-P-001)
3 Volts DC
5 Volts DC
12 Volts DC
15 Volts DC
-15 Volts DC
18 Volts DC