NUREG-1805, Vol. 1

Fire Dynamics Tools (FDT^s) Quantitative Fire Hazard Analysis Methods for the U.S. Nuclear Regulatory Commission Fire Protection Inspection Program

Draft Report for Comment

U.S. Nuclear Regulatory Commission
Office of Nuclear Reactor Regulation
Washington, DC 20555-0001

AVAILABILITY OF REFERENCE MATERIALS IN NRC PUBLICATIONS

NRC Reference Material

As of November 1999, you may electronically access NUREG-series publications and other NRC records at NRC's Public Electronic Reading Room at http://www.nrc.gov/reading-rm.html. Publicly released records include, to name a few, NUREG-series publications; *Federal Register* notices; applicant, licensee, and vendor documents and correspondence; NRC correspondence and internal memoranda; bulletins and information notices; inspection and investigative reports; licensee event reports; and Commission papers and their attachments.

NRC publications in the NUREG series, NRC regulations, and *Title 10, Energy*, in the Code of *Federal Regulations* may also be purchased from one of these two sources.

1. The Superintendent of Documents
   U.S. Government Printing Office
   Mail Stop SSOP
   Washington, DC 20402–0001
   Internet: bookstore.gpo.gov
   Telephone: 202-512-1800
   Fax: 202-512-2250
2. The National Technical Information Service
   Springfield, VA 22161–0002
   www.ntis.gov
   1–800–553–6847 or, locally, 703–605–6000

A single copy of each NRC draft report for comment is available free, to the extent of supply, upon written request as follows:

Address: Office of the Chief Information Officer,
Reproduction and Distribution
Services Section
U.S. Nuclear Regulatory Commission
Washington, DC 20555-0001
E-mail: DISTRIBUTION@nrc.gov
Facsimile: 301–415–2289

Some publications in the NUREG series that are posted at NRC's Web site address http://www.nrc.gov/reading-rm/doc-collections/nuregs are updated periodically and may differ from the last printed version. Although references to material found on a Web site bear the date the material was accessed, the material available on the date cited may subsequently be removed from the site.

Non-NRC Reference Material

Documents available from public and special technical libraries include all open literature items, such as books, journal articles, and transactions, *Federal Register* notices, Federal and State legislation, and congressional reports. Such documents as theses, dissertations, foreign reports and translations, and non-NRC conference proceedings may be purchased from their sponsoring organization.

Copies of industry codes and standards used in a substantive manner in the NRC regulatory process are maintained at—

The NRC Technical Library
Two White Flint North
11545 Rockville Pike
Rockville, MD 20852–2738

These standards are available in the library for reference use by the public. Codes and standards are usually copyrighted and may be purchased from the originating organization or, if they are American National Standards, from—

American National Standards Institute
11 West 42nd Street
New York, NY 10036–8002
www.ansi.org
212–642–4900

Legally binding regulatory requirements are stated only in laws; NRC regulations; licenses, including technical specifications; or orders, not in NUREG-series publications. The views expressed in contractor-prepared publications in this series are not necessarily those of the NRC.

The NUREG series comprises (1) technical and administrative reports and books prepared by the staff (NUREG–XXXX) or agency contractors (NUREG/CR–XXXX), (2) proceedings of conferences (NUREG/CP–XXXX), (3) reports resulting from international agreements (NUREG/IA–XXXX), (4) brochures (NUREG/BR–XXXX), and (5) compilations of legal decisions and orders of the Commission and Atomic and Safety Licensing Boards and of Directors' decisions under Section 2.206 of NRC's regulations (NUREG–0750).

NUREG-1805, Vol. 1

Fire Dynamics Tools (FDT^s) Quantitative Fire Hazard Analysis Methods for the U.S. Nuclear Regulatory Commission Fire Protection Inspection Program

Draft Report for Comment

Manuscript Completed: June 2003
Date Published: June 2003

Prepared by
N. Iqbal, M.H. Salley

N. Iqbal, NRC Project Manager

Prepared for
Division of Systems Safety and Analysis
Office of Nuclear Reactor Regulation
U.S. Nuclear Regulatory Commission
Washington, DC 20555-0001

ABSTRACT

The U.S. Nuclear Regulatory Commission (NRC), Office of Nuclear Reactor Regulation (NRR), Division of Systems Safety and Analysis (DSSA), Plant Systems Branch (SPLB), Fire Protection Engineering and Special Projects Section has developed quantitative methods, known as "Fire Dynamics Tools (FDT^s)," to assist regional fire protection inspectors in performing fire hazard analysis (FHA). These methods have been implemented in spreadsheets and taught at the NRC's quarterly regional inspector workshops. FDT^s were developed using state-of-the-art fire dynamics equations and correlations that were pre-programmed and locked into Microsoft Excel® spreadsheets. These FDT^s will enable the inspector to perform quick, easy, first-order calculations for the potential fire scenarios using today's state-of-the-art principles of fire dynamics. Each FDT^s spreadsheet also contains a list of the physical and thermal properties of the materials commonly encountered in NPPs. This NUREG addresses the technical bases for FDT^s, which were derived from the principles developed primarily in the Society of Fire Protection Engineers (SFPE) *Handbook of Fire Protection Engineering,* National Fire Protection Association (NFPA) *Fire Protection Handbook*, and other fire science literature. The subject matter of this NUREG covers many aspects of fire dynamics and contains descriptions of the most important fire processes. A significant number of examples, reference tables, illustrations, and conceptual drawings are presented in this NUREG to expand the inspector's appreciation in visualizing and retaining the material and understanding calculation methods.

Key Words: Fire dynamics, Hazard analysis, Inspection, Significance determination process, Risk-informed evaluation

Table of Contents

Page

Abstract....iii

List of Fire Dynamics Tools....xix

Disclaimer....xxiii

The Authors....xxv

Acknowledgments....xxvii

Executive Summary....xxix

How to Use this NUREG and FDT^s....xxxi

Chapter 1. Introduction....1-1

1.1 Purpose....1-1
1.2 Objective....1-1
1.3 Regulatory Background on Fire Protection for Nuclear Power Plants....1-1
1.4 Fire Hazard Analysis for Nuclear Power Plants....1-3
1.5 Fire Protection Inspection Findings....1-3
1.6 Fire Scenario Development for Nuclear Power Plants....1-3
1.7 Process of Fire Development....1-4
1.8 The Fire Hazards....1-6
1.8.1 Combustible Materials Found in Nuclear Power Plants....1-8
1.8.1.1 Transient Combustibles....1-8
1.8.1.2 In Situ Combustibles....1-8
1.8.1.3 Liquid Fuels....1-9
1.8.1.4 Explosive and Flammable Gases....1-9
1.9 Location of the Fire....1-10
1.10 Risk-Informed Performance-Based Fire Protection....1-10
1.11 Data Sources for Combustible Materials Found in Nuclear Power Plants....1-11
1.12 References....1-14

Chapter 2. Predicting Hot Gas Layer Temperature and Smoke Layer Height in a Room Fire with Natural and Forced Ventilation....2-1

2.1 Objectives....2-1
2.2 Introduction....2-1
2.3 Compartment Fire Growth....2-1
2.3.1 Stages of Compartment Fires....2-1
2.3.2 Ventilation-limited or Ventilation-controlled Fires....2-5
2.3.3 Fuel-limited Fires....2-5
2.4 Compartment Ventilation....2-5

Table of Contents (Continued)

2.4.1 Definitions....2-6
Volume Flow Rate....2-6
Fan Total Pressure....2-6
Fan Velocity Pressure....2-6
Fan Static Pressure Rise....2-6
2.5 Temperature....2-8
2.6 Estimating Hot Gas Layer Temperature....2-9
2.6.1 Natural Ventilation: Method of McCaffrey, Quintiere, and Harkleroad (MQH)....2-9
2.6.2 Natural ventilation: Compartment Closed - Method of Beyler....2-13
2.6.3 Forced Ventilation: Method of Foote, Pagni, and Alvares (FPA)....2-13
2.6.4 Forced Ventilation: Method of Deal and Beyler....2-14
2.7 Estimating Smoke Layer Height....2-15
2.7.1 Smoke Layer....2-17
2.7.2 Smoke layer Interface Position....2-17
2.7.3 Natural Ventilation: Smoke Filling - The Non-Steady State Yamana and Tanaks Method....2-17
2.8 Data Sources for Heat Release Rate....2-18
2.9 Identification of Fire Scenario....2-20
2.10 Assumption and Limitations....2-24
2.11 Required Input for Spreadsheet Calculations....2-25
2.12 Cautions....2-26
2.13 Summary....2-26
2.14 References....2-28
2.15 Additional Readings....2-29
2.15 Problems....2-31

Chapter 3. Estimating Burning Characteristics of Liquid Pool Fire, Heat Release Rate, Burning Duration, and Flame Height....3-1

3.1 Objectives....3-1
3.2 Heat Release Rate....3-1
3.2.1 Enclosure Effects on Mass Loss Rate....3-6
3.2.2 Pool Fires....3-6
3.3 Burning Duration....3-8
3.3.1 Burning Duration of Pool Fire....3-10
3.4 Flame Height....3-10
3.4.1 Flame Extensions Under Ceiling....3-16
3.4.2 Flame Impingement....3-16
3.4.3 Flame Temperature....3-16
3.4.4 Flames Temperatures of Open Fires....3-18
3.4.5 Flame Temperature in Room Fires....3-19
3.4.6 Adiabatic Flame Temperature....3-19
3.4.7 Temperatures of Objects....3-20
3.4.8 Flame Height Calculations....3-20
3.5 Assumptions and Limitations....3-23

Table of Contents (Continued)

3.6 Required Input for Spreadsheet Calculations....3-24
3.7 Cautions....3-24
3.8 Summary....3-24
3.9 References....3-26
3.10 Additional Readings....3-27
3.11 Problems....3-29

Chapter 4. Estimating Wall Fire Flame Height, Line Fire Flame Height Against the Wall, and Corner Fire Flame Height....4-1

4.1 Objectives....4-1
4.2 Introduction....4-1
4.3 Flame Height Correlations for Wall Fire, Line Fires, and Corner Fires....4-1
4.3.1 Wall Fire Flame Height Correlation....4-2
4.3.2 Line Fire Flame Height Correlation....4-2
4.3.3 Corner Fire Flame Height Correlation....4-5
4.4 Assumptions and Limitations....4-5
4.5 Required Input for Spreadsheet Calculations....4-5
4.6 Cautions....4-7
4.7 Summary....4-7
4.8 References....4-8
4.9 Problems....4-9

Chapter 5. Estimating Radiant Heat Flux from Fire to a Target Fuel....5-1

5.1 Objectives....5-1
5.2 Introduction....5-1
5.3 Critical Heat Flux to a Target....5-2
5.3.1 Point Source Radiation Model....5-2
5.3.2 Solid Flame Radiation Model with Target At and Above Ground Level....5-5
5.3.2.1 Emissive Power....5-5
5.3.2.2 Configuration Factor F_{1-2} under Wind-Free Conditions....5-8
5.3.2.3 Configuration Factor F_{1-2} in Presence of Wind....5-13
5.4 Method of Estimating Thermal Radiation from Hydrocarbon Fireball....5-19
5.4.1 Radiation due to BLEVEs with Accompanying Fireball....5-19
5.5 Assumptions and Limitations....5-20
5.6 Required Input for Spreadsheet Calculations....5-21
5.7 Cautions....5-21
5.8 Summary....5-21
5.9 References....5-23
5.10 Additional Readings....5-24
5.11 Problems....5-25

Chapter 6. Estimating the Ignition Time of a Target Fuel Exposed to a Constant Radiative Heat Flux....6-1

Table of Contents (Continued)

6.1 Objectives....6-1
6.2 Introduction....6-1
6.3 Ignition Sources and Fire Development....6-4
6.4 Ignition Time for Thermally Thick Materials....6-4
6.4.1 Method of Tewarson....6-5
6.4.2 Method of Mikkola and Wichman....6-8
6.4.3 Method of Quintiere and Harkleroad....6-9
6.4.4 Method of Janssens....6-9
6.4.5 Method of Toal, Silcock, and Shields....6-12
6.5 Assumptions and Limitations....6-13
6.6 Required Input for Spreadsheet Calculations....6-14
6.7 Cautions....6-14
6.8 Summary....6-14
6.9 References....6-15
6.10 Additional Readings....6-15
6.11 Problems....6-17

Chapter 7. Estimating the Full-Scale Heat Release Rate of a Cable Tray Fire....7-1

7.1 Objectives....7-1
7.2 Introduction....7-1
7.3 Cable Tray Fire Burning Mode Classification....7-2
7.4 Cable Tray Heat Release Rate....7-3
7.5 Cable Failure Criteria (Critical Temperature and Critical Heat Flux)....7-4
7.6 Assumptions and Limitations....7-4
7.7 Required Input for Spreadsheet Calculations....7-4
7.8 Cautions....7-6
7.9 Summary....7-6
7.10 References....7-8
7.11 Additional Readings....7-8
7.12 Problems....7-9

Chapter 8. Estimating Burning Duration of Solid Combustibles....8-1

8.1 Objectives....8-1
8.2 Introduction....8-1
8.3 Burning Duration of Solid Combustibles....8-1
8.4 Assumptions and Limitations....8-3
8.5 Required Input for Spreadsheet Calculations....8-3
8.6 Cautions....8-3
8.7 Summary....8-3
8.8 References....8-4
8.9 Problems....8-5

Table of Contents (Continued)

Chapter 9. Estimating the Centerline Temperature of a Buoyant Fire Plume....9-1

9.1 Objectives....9-1
9.2 Introduction....9-1
9.3 Fire Plume Characteristics....9-3
9.3.1 Plume Temperature....9-5
9.4 Application for Centerline Fire Plume Correlation....9-8
9.5 Assumptions and Limitations....9-8
9.6 Required Input for Spreadsheet Calculations....9-8
9.7 Cautions....9-8
9.8 Summary....9-9
9.9 References....9-10
9.10 Additional Readings....9-10
9.11 Problems....9-11

Chapter 10. Estimating Sprinkler Response Time....10-1

10.1 Objectives....10-1
10.2 Introduction....10-1
10.3 Operating Principles of Automatic Sprinklers....10-3
10.3.1 Heat Transfer Characteristics for Heat Sensitive Elements....10-3
10.3.2 Sprinkler Dynamics....10-5
10.3.3 Temperature Ratings of Automatic Sprinklers....10-5
10.3.4 Sprinkler Activation....10-9
10.3.5 Sprinkler Spray Interaction with Plume....10-13
10.4 Assumption and Limitations....10-13
10.5 Required Input for Spreadsheet Calculations....10-14
10.6 Cautions....10-14
10.7 Summary....10-14
10.8 References....10-15
10.9 Additional Readings....10-15
10.10 Problems....10-17

Chapter 11. Estimating Smoke Detector Response Time....11-1

11.1 Objectives....11-1
11.2 Introduction....11-1
11.3 Characteristics of Smoke Production....11-1
11.4 Operating Principles of Smoke Detectors....11-3
Photoelectric Light Obscuration Smoke Detection....11-3
Photoelectric Light Scattering Smoke Detection....11-4
Ionization Smoke Detection....11-4
Combination Detection....11-4
Projected Beam Detection....11-4
Air Sampling Detection....11-4
11.5 Smoke Detector Response....11-7

Table of Contents (Continued)

11.6 Assumptions and Limitations....11-9
11.7 Required Input for Spreadsheet Calculations....11-9
11.8 Cautions....11-9
11.9 Summary....11-9
11.10 References....11-10
11.11 Additional Readings....11-10
11.12 Problems....11-11

Chapter 12. Estimating Heat Detector Response Time....12-1

12.1 Objectives....12-1
12.2 Introduction....12-1
12.3 Underwriters' Laboratories, Inc., Listing Information for Heat-Detecting Automatic Fire Detectors....12-1
12.4 Operating Principle of Heat Detector....12-2
12.4.1 Fixed Temperature Heat Detector....12-2
12.4.1.1 Fusible-Element-Type....12-3
12.4.1.2 Continuous Line-Type....12-3
12.4.1.3 Bimetallic-Type....12-3
12.4.2 Rate Compensation Heat Detector....12-3
12.4.3 Rate-of-Rise Heat Detectors....12-4
12.4.4 Pneumatic Heat Detectors....12-4
12.4.4.1 Line-Type Heat Detectors....12-4
12.4.5 Combination Heat Detectors....12-5
12.4.6 Electronic Spot-Type Thermal Detectors....12-5
12.5 Fixed-Temperature Heat Detector Activation....12-5
12.6 Assumptions and Limitations....12-9
12.7 Required Input for Spreadsheet Calculations....12-11
12.8 Cautions....12-11
12.9 Summary....12-11
12.10 References....12-12
12.11 Additional Readings....12-12
12.12 Problems....12-13

Chapter 13. Predicting Compartment Flashover....13-1

13.1 Objectives....13-1
13.2 Introduction....13-1
13.3 Compartment Flashover....13-5
13.3.1 Method of Predicting Compartment Flashover....13-5
13.3.1.1 Method of McCaffrey, Quintiere, and Harkleroad (MQH)....13-5
13.3.1.2 Method of Babrauskas....13-6
13.3.1.3 Method of Thomas....13-6
13.3.2 Method of Predicting Compartment Post-Flashover Temperature....13-7
13.4 Assumptions and Limitations....13-8
13.5 Required Input for Spreadsheet Calculations....13-8

Table of Contents (Continued)

13.6 Cautions....13-8
13.7 Summary....13-8
13.8 References....13-9
13.9 Problems....13-11

Chapter 14. Estimating Pressure Rise Attributable to a Fire in a Closed Compartment....14-1

14.1 Objectives....14-1
14.2 Introduction....14-1
14.3 Definition of Pressure....14-1
14.4 Pressure Rise Calculations....14-3
14.5 Assumptions and Limitations....14-4
14.6 Required Input for Spreadsheet Calculations....14-4
14.7 Cautions....14-4
14.8 Summary....14-4
14.9 References....14-5
14.10 Problems....14-7

Chapter 15. Estimating the Pressure Increase and Explosive Energy Release Associated with Explosions....15-1

15.1 Objectives....15-1
15.2 Introduction....15-1
15.3 Explosion Hazard....15-3
15.4 Explosive Range....15-4
15.5 Backdraft Explosion....15-4
15.6 Smoke Explosion....15-4
15.7 Unconfined and Confined Explosion....15-4
15.8 Estimating the Effects of Explosions....15-5
15.8.1 Extimating Explosive Energy Release in a Confined Explosion....15-9
15.8.2 TNT Mass Equivalent Calculations....15-10
15.8.3 Blast Effects....15-11
15.9 Effects of Pressure on Humans and Environments....15-11
15.10 Effects of Pressure on Components....15-13
15.11 Estimating the Pressure Increase Attributable to a Confined Explosion....15-13
15.12 Assumptions and Limitations....15-14
15.13 Required Input for Spreadsheet Calculations....15-14
15.14 Cautions....15-15
15.15 Summary....15-15
15.16 References....15-16
15.17 Additional Readings....15-16
15.18 Problems....15-17

Table of Contents (Continued)

Chapter 16. Calculating the Rate of Hydrogen Gas Generation in Battery Rooms.....16-1

16.1 Objectives.....16-1
16.2 Introduction.....16-1
16.3 Combustion of Hydrogen Gas.....16-1
16.4 Ignition of Hydrogen Gas.....16-2
16.4.1 Battery as an Ignition Source.....16-5
16.4.2 Control of Hydrogen Gas Combustion.....16-5
16.5 Fire Protection Code Requirements for Battery Rooms.....16-8
16.6 Method of Calculating the Rate of Hydrogen Generation in Battery Rooms.....16-9
16.7 Method of Calculating Flammable Gas and Vapor Concentration Buildup Enclosed Spaces.....16-9
16.8 Method of Calculating Flammable Gas and Vapor Concentration Buildup Time in Enclosed Spaces.....16-11
16.9 Assumptions and Limitations.....16-12
16.10 Required Input for Spreadsheet Calculations.....16-12
16.11 Cautions.....16-12
16.12 Summary.....16-13
16.13 References.....16-14
16.14 Problems.....16-15

Chapter 17. Calculating the Fire Resistance of Structural Steel Members.....17-1

17.1 Objectives.....17-1
17.2 Introduction.....17-1
17.3 Fire Resistance of Buildings.....17-4
17.4 Fire Resistance of Steel Members.....17-4
17.4.1 Fire Resistance and Temperature Limits of Steel Elements.....17-6
17.4.2 Fire Resistance and Temperature Limits of Reinforced Concrete Elements.....17-6
17.5 Failure Criteria for Structural Members.....17-6
17.6 Fire Walls and Fire Barriers Walls.....17-7
17.7 Fire Resistance Coatings for Structural Steel.....17-9
17.8 Calculating Fire Resistance or Endurance.....17-12
17.8.1 Equivalent Fire Resistance of Structural Steel.....17-12
17.8.2 Steel Column (Unprotected).....17-12
17.8.3 Steel Column (Protected with Gypsum Wallboard).....17-13
17.8.4 Steel Column (with Low-Density Protection).....17-16
17.8.5 Steel Column (Protected with Spray-On Materials).....17-17
17.8.6 Steel Column (Protected by Concrete).....17-17
17.8.7 Steel Beams.....17-18
17.8.7.1 Beam Substitution Correlation for Structural Steel Beams Protected by Spray-On Materials.....17-20
17.8.7.2 Column Substitution Correlation for Structural Steel Columns Protected by Spray-On Materials.....17-21

Table of Contents (Continued)

17.8.8 Numerical Method to Estimate the Temperature Increase in Structural Steel Elements....17-21
17.8.8.1 Unprotected Structural Steel Sections....17-22
17.8.8.2 Protected Structural Steel Sections....17-24
17.9 Assumptions and Limitations....17-25
17.10 Required Input for Spreadsheet Calculations....17-26
17.11 Cautions....17-26
17.12 Summary....17-26
17.13 References....17-27
17.14 Problems....17-29

Chapter 18. Estimating Visibility Through Smoke....18-1

18.1 Objectives....18-1
18.2 Introduction....18-1
18.3 Smoke Obscuration....18-1
18.4 Effect of Smoke on Nuclear Power Plants....18-2
18.5 Estimating Visibility Through Smoke - Jin Method....18-2
18.6 Assumptions and Limitations....18-5
18.7 Required Input for Spreadsheet Calculations....18-5
18.8 Cautions....18-5
18.9 Summary....18-6
18.10 References....18-6

List of Figures

1-1 Physical Process of Combustion and Fire....1-5
1-2 The Fire Triangle....1-7
2-1 Typical Stages of Fire Development....2-2
2-2 Stages of Compartment Fire....2-3
2-3 Types of Mechanical Ventilation Systems....2-7
2-4 Smoke Filling In a Compartment Fire....2-16
2-5 General Representation of Heat Release Histories for a Fuel Package....2-19
3-1 A Simple Design Fire Curve....3-2
3-2 Free and Enclosure Fire Power....3-7
3-3 Dynamic Features of a Pool Fire....3-9
3-4 Temperature Distribution in the Flame of a Burning Candle....3-12
3-5 Diffusion Flame....3-13
3-6 Premixed Flame....3-13
3-7 Laminar Diffusion Flame....3-14
3-8 Laminar Premixed Flames....3-15
3-9 Flame Extensions with a Free Burning Flame and Under a Smooth Ceiling....3-17
3-10 Characteristics of Flame Height Fluctuations....3-22
4-1 Wall Fire Flame Configuration....4-3
4-2 Line Fire Flame Against a Wall....4-4
4-3 Corner Fire Flame Configuration....4-6
5-1 Radiant Heat Flux from a Pool Fire to a Floor-Based Target Fuel (Point Source Model)....5-4
5-2 Solid Flame Radiation Model with No Wind and Target at Ground Level....5-6
5-3 Solid Flame Radiation Model with No Wind and Target Above Ground....5-7
5-4 Cylindrical Flame Shape Configuration Factor Geometry for Vertical and Horizontal Targets at Ground Level with No Wind....5-9
5-5 Cylindrical Flame Shape Configuration Factor Geometry for Vertical and Horizontal Targets Above Ground with No Wind....5-10
5-6 Solid Flame Radiation Model in Presence of Wind and Target at Ground Level....5-14
5-7 Solid Flame Radiation Model in Presence of Wind and Target Above Ground....5-15
6-1 Ignition Processes for Liquid and Solid Fuels....6-2
6-2 External Radiation to a Solid Target from a Flame or a Hot Surface at Evaluated Temperature....6-3
9-1 A Buoyant Turbulent Plume Showing Air Entrainment....9-2
9-2 Three Zones of the Axisymmetric Buoyant Fire Plume....9-4
9-3 Fire Plume with Virtual Origin....9-7
10-1 Heat Transfer Characteristics of the Heat Sensitive Element of Sprinkler....10-4
10-2 Representative Arrangement of a Solder-Type Link-and-Lever Automatic Sprinkler....10-6
10-3 Ceiling Jet Flow Beneath an Unconfined Ceiling and Sprinkler Activation....10-12
11-1 Qualitative Relationship Between Time and Damage for Different Speeds of Fire Development and Average Detection, Reaction, and Fire Fighting....11-2
11-2 Illustration of the Photoelectric Principle....11-5
11-3 Illustration of the Ionization Principle....11-6
12-1 Ceiling Jet Flow Beneath an Unconfined Ceiling Showing a Heat Detector....12-10
13-1 Flashover and Post-Flashover Compartment Fire....13-2

List of Figures (Continued)

14-1 Overpressure Generated at a Fixed Location....14-2
15-1 Pressure Peaks of an Explosion Inside a Building....15-6
15-2 Propagating of Explosion Flame....15-7
15-3 Ideal Blast Wave Overpressure vs. Scaled Distance....15-12
16-1 Flammability Limits of Hydrogen in Air Diluted with Carbon Dioxide and Nitrogen....16-3
16-2 Flammability Limits of Hydrogen in Air-Steam Mixtures....16-4
16-3 Spark Ignition Energies for Dry Hydrogen-Air Mixtures....16-6
16-4 Typical Flammability Diagram....16-7
17-1 Standard Time-Temperature Curve (ASTM E119)....17-2
17-2 Typical Methods of Protective Various Structural Steel Elements from Fire....17-5
17-3 Encasement of a Steel Beam by Monolithic Casting of Concrete Around the Beam....17-10
17-4 Spray-On Mineral Fibers and Noncombustible Protective Coatings....17-11
17-5 Sections of Unprotected Steel Columns....17-14
17-6 Heated Perimeters for Common Column and Beam Shapes....17-15
17-7 Concrete-Protected Structural Steel Columns....17-19

List of Tables

1-1 Common Combustible and Hazardous Materials in NPPs....1-6
2-1 Temperature Conversions....2-8
2-2 Critical Temperatures for Different Exposure Conditions and Effects on Humans....2-9
2-3 Thermal Properties of Compartment Enclosing Surface Materials....2-12
2-4 Measured Heat Release Data for Cable Jacketing Material....2-21
2-5 Measured Heat Release Data for Electrical Cabinets....2-21
2-6 Measured Heat Release Data for Transient Combustible Materials (Flammable/Combustibles Liquids)....2-22
2-7 Measured Heat Release Data for Transient Combustible Materials (Trash)....2-22
2-8 Measured Heat Release Data for Transient Combustible Materials (Plywood and Wood Pallet)....2-23
Ignition Thresholds (Pilotless within 30 seconds)....2-23
2-9 Table 2-9. Ignition Thresholds (Pilotless within 30 seconds)....2-23
2-10 Thermal Effects on Electronics....2-23
3-1 Rough Measure of Heat Released or Generated from Various Sources....3-3
3-2 Large-Pool Fire Burning Rate Data....3-5
3-3 Pool Fire Burning Modes....3-6
3-4 Burning Rate of Some Combustible Materials Found in Nuclear Power Plants....3-8
3-5 Flame Temperatures of Selected Fuels....3-18
3-6 Adiabatic Flame Temperatures of Selected Fuels....3-20
6-1 Typical Heat Fluxes From Various Sources....6-4
6-2 Typical Ignition Times of Thick Solid Fuels....6-5
6-3 Critical Heat Flux and Thermal Response Parameters of Selected Materials....6-7
6-4 Ignition Temperature and Thermal Properties of Materials....6-8
6-5 Ignition and Flame Spread Properties of Materials....6-10
6-6 Ignition and Flame Spread Properties of Materials....6-12
7-1 Bench-Scale HRR of a Cable Tray Fire....7-5
7-2 Thermoplastic vs. Thermoset Cables....7-6
8-1 Thermal Properties of Solid Combustible Materials....8-2
10-1 Temperature Rating, Classification, and Color Coding of Automatic Sprinklers....10-7
10-2 Generic Sprinkler Temperature Rating ($T_{activation}$)....10-8
10-3 Generic Sprinkler Response Time Index (RTI)....10-9
12-1 Time Constant of Any Listed Detector....12-7
12-2 Detector Response Time Index of Any Listed Detector....12-7
15-1 Estimated Damage Attributable to Explosive Overpressure....15-8
15-2 Heat of Combustion, Ignition Temperature, and Adiabatic Flame Temperature of Flammable Gases....15-10
15-3 Pressure Effects on Humans....15-13
15-4 Typical Failure Pressures of Some Building Elements....15-13
16-1 Hydrogen Falmmability Limits in Air at Room Temperature....16-2
16-2 Float Current Demand for Stationary Battery....16-10
16-3 Mixing Efficiency for Various Ventilation Arrangements....16-11
17-1 Standard Time-Temperature Curve Points....17-1
17-2 Temperature Endpoint Criteria for Structural Members (ASTM E119)....17-7

List of Tables (Continued)

17-3 Fire Resistance of Walls....17-8
17-4 Resultant Emissivity for Different Types of Construction....17-23
17-5 Spreadsheet for Calculating the Temperature of Steel Sections....17-24
17-6 Thermal Properties of Insulation Materials....17-25
18-1 Proportionality Constants for Visibility....18-3
18-2 Specific Extinction Coefficient for Visibility....18-3
18-3 Smoke Particulate Yield....18-4

LIST OF NRR FIRE DYNAMICS TOOLS

The NRC's Office of Nuclear Reactor Regulation (NRR) developed the fire dynamics tools (FDT[s]) using commercially available software (Microsoft Excel® 2000).

FDT[s]	Chapter and Related Calculation Method(s)
Temperature_NV.xls Temperature-NV Thermally Thick Temperature-NV Thermally Thin	**Chapter 2.** Predicting Hot Gas Layer Temperature and Smoke Layer Height in a Room Fire with Natural Ventilation Method of McCaffrey, Quintiere, and Harkleroad (MQH) • Compartment with Thermally Thick Boundaries • Compartment with Thermally Thin Boundaries
Temperature_Closed_ Compartment.xls	**Chapter 2.** Predicting Hot Gas Layer Temperature in a Room Fire with Door Closed. Compartment has Sufficient Leaks to Prevent Pressure Buildup, Leakage is Ignored Method of Beyler
Temperature_FV1.xls Temperature-FV Thermally Thick Temperature-FV Thermally Thin	**Chapter 2.** Predicting Hot Gas Layer Temperature in a Room Fire with Forced Ventilation Method of Foote, Pagni, and Alvares (FPA) • Compartment with Thermally Thick Boundaries • Compartment with Thermally Thin Boundaries
Temperature_FV2.xls Temperature-FV Thermally Thick Temperature-FV Thermally Thin	Method of Deal and Beyler • Compartment with Thermally Thick Boundaries • Compartment with Thermally Thin Boundaries
HRR_Flame_Height_Burning_ Duration_Calculation.xls	**Chapter 3.** Estimating Burning Characteristics of Liquid Pool Fire, Heat Release Rate, Burning Duration, and Flame Heigh
Flame_Height_Calculations.xls Wall_Line_Flame_Height Corner_Flame_Height Wall_Flame_Height	**Chapter 4.** Estimating Wall Fire Flame Height, Line Fire Flame Height Against the Wall, and Corner Fire Flame Height

LIST OF NRR FIRE DYNAMICS TOOLS (continued)

FDT[a]	Chapter and Related Calculation Method
	Chapter 5. Estimating Radiant Heat Flux from Fire to a Target Fuel
Heat_Flux_Calculations_Wind_Free.xls Point Source Solid Flame 1 Solid Flame 2	*Wind-Free Condition* • Point Source Radiation Model (Target at Groung Level) • Solid Flame Radiation Model (Target at Ground Level) • Solid Flame Radiation Model (Target Above Ground Level)
Heat_Flux_Calculations_Wind.xls Solid Flame 1 Solid Flame	*Presence of Wind* • Solid Flame Radiation Model (Target at Ground Level) • Solid Flame Radiation Model (Target Above Ground Level)
Thermal_Radiation_From_Hydrocarbon_Fireballs.xls	Estimating Thermal Radiation from Hydrocarbon Fireballs
Ignition_Time_Calculations.xls	**Chapter 6.** Estimating the Ignition Time of a Target Fuel Exposed to a Constant Radiative Heat Flux
Ignition_Time_Calculations1	• Method of Estimating Piloted Ignition Time of Solid Materials Under Radiant Exposures. Method of (1) Mikkola and Wichman, (2) Quintiere and Harleroad, and (3) Jansssens
Ignition_Time_Calculations2	• Method of Estimating Piloted Ignition Time of Solid Materials Under Radiant Exposures. Method of Toal, Silcock and Shields
Ignition_Time_Calculations3	• Method of Estimating Piloted Ignition Time of Solid Materials Under Radiant Exposures. Method of Tewarson
Cable_HRR_Calculations.xls	**Chapter 7.** Estimating Full-Scale Heat Release Rate of a Cable Tray Fire
Burning_Duration_Soild.xls	**Chapter 8.** Estimating Burning Duration of Solid Combustibles
Plume_Temperature_Calculations.xls	**Chapter 9.** Estimating Centerline Temperature of a Buoyant Fire Plume

LIST OF NRR FIRE DYNAMICS TOOLS (continued)

FDT[a]	Chapter and Related Calculation Method
Detector_Activation_Time.xls	Estimating Detector Response Time.
Sprinkler	**Chapter 10.** Estimating Sprinkler Response Time
Smoke	**Chapter 11.** Estimating Smoke Detector Response Time
FTHDetector	**Chapter 12.** Estimating Heat Detector Response Time
Compartment_ Flashover_ Calculations.xls	**Chapter 13.** Predicting Compartment Flashover
Post_Flashover_Temperature	• Compartment Post-Flashover Temperature. Method of Law
Flashover-HRR	• Minimum Heat Release Rate Required to Compartment Flashover. Method of (1) McCaffrey, Quintiere, and Harkleroad (MQH); (2) Babrauskas; and (3) Thomas
Compartment_Over_Pressure_ Calculations.xls	**Chapter 14.** Estimating Pressure Rise Attributable to a Fire in a Closed Compartment
Explosion_Claculations.xls	**Chapter 15.** Estimating the Pressure Increase and Explosive Energy Release Associated with Explosions
Battery_Room_Flammable_Gas_ Conc.xls	**Chapter 16.** Calculating the Rate of Hydrogen Gas Generation in Battery Rooms
Battery_Room_Hydrogen	• Method of Estimating Hydrogen Gas Generation Rate in Battery Rooms
Flammable_Gas_Buildup	• Method of Estimating Flammable Gas and Vapor Concentration Buildup in Enclosed Spaces
Flammable_Gas _Buildup_Time	• Method of Estimating Flammable Gas and Vapor Concentration Buildup Time in Enclosed Spaces

LIST OF NRR FIRE DYNAMICS TOOLS (continued)

FDT[s]	Chapter and Related Calculation Method
	Chapter 17. Calculating the Fire Resistance of Structural Steel Members
FR_Beams_Columns_Substitution_Correlation.xls FR-Beam FR-Column	• Empirical Correlations
FR_Beams_Columns_Quasi_Steady_State_Spray_Insulated.xls FR-Beam FR-Column	• Beam Substitution Correlation (Spray-Applied Materials) • Column Substitution Correlation (Spray-Applied Materials)
FR_Beams_Columns_Quasi_Steady_State_Board_Insulated.xls FR-Beam FR-Column	• Heat Transfer Analysis using Numerical Methods Protected Steel Beams and Columns (Spray-Applied)
FR_Beams_Columns_Quasi_Steady_State_Uninsulated.xls FR-Beam FR-Column	• Heat Transfer Analysis using Numerical Methods Protected Steel Beams and Columns (Board Materials) • Heat Transfer Analysis using Numerical Methods Unprotected Steel Beams and Columns
Visibility_Through_Smoke.xls	**Chapter 18.** Estimating Visibility Through Smoke

DISCLAIMER

The calculation methods presented in this NUREG and programmed in the Fire Dynamics Tools (FDT^s) spreadsheets include scientific calculations, as well as material physical and thermal properties relevant to fire hazard analyses. Each spreadsheet on the CD ROM has been protected and secured to avoid calculation errors attributable to invalid entries in the cell(s). Although each calculation in each spreadsheet has been verified with the results of hand calculations, there is no absolute guarantee of the accuracy of these calculations.

For the first-time analyst, the text in the NUREG should be read in its entirety before an analysis is made. Most of the equations and correlations in the spreadsheets are simple mathematical expressions commonly used in fire protection engineering today. The mathematical expressions are not limited and sometimes give physically impossible values. Where we have encountered this problem, the spreadsheets have red warning flags added. If a value exceeds known limits, a red flag appears. For example a red flag appears when an equation increases the hot gas layer temperature value as a result of a fire that well beyond those that are physically possible.

Finally, with respect to errors—of any sort whatsoever—that may still be present in text, we are of one mind. They are the results of something the other one of us did or did not do. No one else can share them.

To offer any questions, comments, or suggestions, or to report an error in the NUREG or FDT^s, please send an email to nxi@nrc.gov or mxs3@nrc.gov or write to:

Naeem Iqbal or Mark H. Salley
Office of Nuclear Reactor Regulation
U.S. Nuclear Regulatory Commission
Mail Stop O11 A11
Washington, DC 20555-0001

THE AUTHORS

Naeem Iqbal

Naeem Iqbal is a Fire Protection Engineer in the NRS's Office of Nuclear Reactor Regulation (NRR). Mr. Iqbal holds a Master of science degree in fire protection engineering from the University of Maryland at College Park and a Bachelor of Science degree in mechanical engineering from NED University of Engineering and Technology in Pakistan. He is a member of the Society of Fire Protection Engineers (SFPE); National Fire Protection Association (NFPA); American Society of Heating, Refrigerating, and Air-Conditioning Engineers (ASHRAE); and International Association of Fire Safety Science (IAFSS).

Mr. Iqbal has been actively involved in fire hazard analysis, computer and mathematical fire modeling, smoke spread and fire growth, fire code review and compliance, and fire risk assessment projects for the U.S. commercial nuclear power plants. Mr. Iqbal also reviews and prepares safety evaluation reports for power reactors. He is currently involved in preparing safety evaluation reports to support renewal of licenses under 10 CFR Part 54 for extended operation of the Nation's operating nuclear power plants.

Mr. Iqbal has also been involved in research and development projects in fire protection engineering, with a particular focus on fundamental and applied aspects of fire safety science, engineering, and technology. Mr. Iqbal has authored several publications and technical reports on flame spread, burning rate, fire growth on materials, and fire hazard analysis.

Prior to joining the NRC, Mr. Iqbal worked for Hughes Associates Inc., a leading engineering consulting firm specializing in engineering design, research and development and advanced technology related to fire protection engineering. At Hughes Associates, he was responsible for performing technical studies of a wide range of fire protection problems, as well as fire hazard and risk analysis of unusual and unique situations in commercial and industrial facilities and the Department of Energy (DOE) nuclear processing facilities problems that where model building codes and fire codes fail to or inadequately address a particular situation.

Mark Henry Salley

Mark Henry Salley is a Fire Protection Engineer in the NRC's Office of Nuclear Reactor Regulation (NRR). Mr. Salley holds Master and Bachelor of Science degrees in fire protection engineering, both from the University of Maryland at College Park. He is a registered professional engineer in fire protection engineering and a member of the National Fire Protection Association (NFPA), American Nuclear Society (ANS), and Society of Fire Protection Engineers (SFPE).

Prior to joining the NRC, Mr. Salley was the Corporate Fire Protection Engineer for the Tennessee Valley Authority Nuclear (TVAN) program. There, he was responsible for the overall TVAN Fire Protection and Fire Safe-Shutdown Program (Appendix R). Mr. Salley worked on the restart of Sequoyah Nuclear Plant, Units 1 and 2; Browns Ferry Nuclear Plant, Units 2 and 3; and the completion of construction, licensing, and startup of Watts Bar Nuclear Plant, Unit 1.

Mr. Salley has an extensive background in fire protection engineering, including fire-fighting, design engineering, fire testing, and analytical analysis. Mr. Salley has authored papers in the area of fire protection engineering.

ACKNOWLEDGMENTS

The authors would like to thank our colleagues and managers in NRC Headquarters for support on this project. The authors also thank the NRC regional managers and fire protection inspectors for their contributions, support, and suggestions. The regional inspectors contributed valuable advice during quarterly fire protection seminars to improve the quality of the FDT^s spreadsheets. The final product was developed with them in mind as the end user.

We also extend our thanks to Tanya M. Mensah, Fire Protection Engineer, NRR/DSSA/SPLB, as well as Matthew G. Yoder, Joel Rivera-Oritz, and Alexander Velazquez-Lozada NRR Nuclear Safety Interns, who assisted with the preparation of this NUREG and the FDT^s spreadsheets. Their invaluable assistance is deeply appreciated. George M. Hausman, a Reactor Inspector in Region III, is also gratefully acknowledged for assisting in making the FDT^s spreadsheets more user friendly. The authors also extend special thanks to Ms. Paula A. Garrity, a Technical Editor in the Web, Publishing and Distribution Services Division (WPDSD) of the NRC's Office of Chief Information Officer (OCIO) for providing editorial support, navigating us through the formal requirements, and assisting us in setting the style and the appearance of the text. We are also indebted to Mr. Lionel J. Watkins, a Visual Information Specialist in OCIO/WPDSD who designed the drawings and many of the graphics in the NUREG.

Our sincere thanks go also to Mr. Gerald Haynes, Fire Protection Engineer, Bureau of Alcohol, Tobacco and Firearms (ATF), Washington, DC, who identified the concept of spreadsheets used in the ATF fire and arson investigation program. The ATF's spreadsheets served as conceptual model for the NRC effort.

Naeem Iqbal
Mark H. Salley

EXECUTIVE SUMMARY

The U.S. Nuclear Regulatory Commission (NRC), Office of Nuclear Reactor Regulation (NRR), Division of Systems Safety and Analysis (DSSA), Plant Systems Branch (SPLB), Fire Protection Engineering and Special Projects Section has developed quantitative methods, known as "Fire Dynamics Tools (FDT^s)," to assist regional fire protection inspectors in performing fire hazard analysis (FHA). These methods have been implemented in spreadsheets and taught at the NRC's quarterly regional inspector workshops conducted in 2001–2002. The goal of the training is to assist inspectors in calculating the quantitative aspects of a postulated fire and its effects on safe nuclear power plant (NPP) operation. FDT^s were developed using state-of-the-art fire dynamics equations and correlations that were pre-programmed and locked into Microsoft Excel® spreadsheets. These FDT^s will enable the inspector to perform quick, easy, first-order calculations for the potential fire scenarios using today's state-of-the-art principles of fire dynamics. Each FDT^s spreadsheet also contains a list of the physical and thermal properties of the materials commonly encountered in NPPs.

The FDT^s are intended to assist fire protection inspectors in performing risk-informed evaluations of credible fires that may cause critical damage to essential safe-shutdown equipment. This is the process required by the new reactor oversight process (ROP) in the NRC's inspection manual[1]. In the new ROP, the NRC is moving toward a more risk-informed, objective, predictable, understandable, and focused regulatory process. Key features of the new program are a risk-informed regulatory framework, risk-informed inspections, a significance determination process (SDP)[2] to evaluate inspection findings, performance indicators, a streamlined assessment process, and more clearly defined actions that the NRC will take for plants based on their performance.

This NUREG addresses the technical bases for FDT^s, which were derived from the principles developed primarily in the Society of Fire Protection Engineers (SFPE) *Handbook of Fire Protection Engineering,* National Fire Protection Association (NFPA) *Fire Protection Handbook*, and other fire science literature. The subject matter of this NUREG covers many aspects of fire dynamics and contains descriptions of the most important fire processes. A significant number of examples, reference tables, illustrations, and conceptual drawings are presented in this NUREG to expand the inspector's appreciation in visualizing and retaining the material and understanding calculation methods.

The content of the FDT^s encompasses fire as a physical phenomenon. As such, the inspector needs a working knowledge of algebra to effectively use the formulae presented in this NUREG and FDT^s. Acquired technical knowledge or course background in the sciences will also prove helpful. The information contained in this NUREG is similar to, but includes less theory and detail than, an undergraduate-level university curriculum for fire protection engineering students.

---

[1]NRC Inspection Manual, Chapter 0609F, Appendix F, "Determining Potential Risk Significance of Fire Protection and Post-Fire Safe Shutdown Inspection Findings," February 27, 2001.

[2]NRC Inspection Manual, Chapter 0609F, Appendix F, Section F.5, "Fire Protection Risk Significance Screening Methodology—Phase 2, Step 4: Integrated Assessment of DID Findings (Excluding SSD) and Fire Ignition Frequency," February 27, 2001.

The goal of this NUREG is to develop a common body of knowledge of commercial NPP fire protection and fire science to enable the inspector to acquire the understanding, skills, and abilities necessary to effectively apply principles of fire dynamics to analyze the potential effects of a fire in an NPP. The FDT[s] will advance the FHA process from a primarily qualitative approach to a more quantitative approach. The development of this NUREG, the FDT[s], and the quarterly inspector workshops conducted in 2001-2002 are the NRC's first steps in achieving that goal.

Fire is a complex subject and transfer of its concepts to useful pursuits is a challenge. We hope that this NUREG and the FDT[s] can make a difference in the NRC's fire protection inspection program, specifically risk-informed fire protection initiatives such as the SDP and risk-informed inspection of associated circuits.

HOW TO USE THIS NUREG AND THE FDT^S

This NUREG and the related Fire Dynamics Tools (FDT^s) provide first-order quantitative methods (i.e., traditional approaches, correlations, computations, closed form approximations or exact solutions, and hazard models) to assess the potential fire hazard development in commercial NPPs. This NUREG is divided into chapters that correspond to FDT^s. First-time users should read this NUREG in its entirety before performing an analysis. Once the basic principles are understood, the FDT^s can be used to perform fire dynamics calculations. As explained in this NUREG, appropriate care must be exercised to apply the FDT^s within the limits of their validity.

The chapters and appendices of this NUREG provide basic text on fire protection engineering, to provide inspectors with an overview of the basic characteristics and behavior of fire, fire hazards of materials and buildings, and an overview of the fundamental methods of fire protection. Appendix F of this NUREG contains a glossary of terms being used in the field of fire protection engineering. Appendix I, "Mathematics Review and System of Units," has been included in this NUREG to refresh the inspector's understanding of mathematical functions, dimensional consistency in equations, and variables used in the FDT^s. Each chapter contains practice problems for the inspector to apply the principles learned with the FDT^s program. Additional problems can be found in Appendix J for added practice.

Each chapter in this NUREG has one or more spreadsheet(s) based on the method discussed in the chapter. Each spreadsheet is designed to make the calculation method understandable in a simple manner, and all of them are in the same format. The input parameter cells in each spreadsheet are identified with yellow color. The users need to enter input data by typing (on the keyboard) and making selections through the use of pull-down menus and dialog boxes. Many material properties are included in the spreadsheets. This will allow the user to select a single input, instead of entering all of the parameters associated with the input from the table. The user simply needs to select the material from the provided list and the property data will automatically be placed in the corresponding input yellow cells. For example, an inspector can simply click on "concrete" in the property table menu and the correct parameters will appear in the input parameter cells. This will also eliminate manual errors in entering the table values in the input parameter cells. If material properties are not available in the spreadsheets table, the user will have to enter the values manually without selecting any material from the material properties data table.

The calculation methods are shown in the spreadsheet in detail and step by step so that the inspector can follow the application of the FHA methods. The example problems at the end of each chapter and practice problems in Appendix J have been designed to be solved mainly with the FDT^s, but in some cases, simple calculations are required before using the FDT^s. The results of the calculations are shown by the word "ANSWER" in the spreadsheets.

CHAPTER 1. INTRODUCTION

1.1 Purpose

The purpose of this NUREG is to introduce the principles of fire dynamics and illustrate how fire protection inspectors can apply those principles in a risk-informed manner to better determine whether credible fire scenarios are possible. In this context, we broadly define the term "fire dynamics" as the scientific study of hostile fires. The dynamic nature of fire is a quantitative and mathematically complex subject. It combines physics, chemistry, mathematics, and engineering principles and can be difficult to comprehend for those who have a limited background in these areas. With the objective of quantitatively describing fire and related processes (i.e., ignition, flame spread, fire growth, and smoke movement) and their effects in an enclosure, the Fire Dynamics Tools (FDT^s) have been developed to assist fire protection inspectors to solve problems of fire hazard in nuclear power plants (NPPs).

The goal of this NUREG is to provide insights into fire dynamics, without using the sophisticated mathematics that are normally associated with the study of fire dynamics. Nonetheless, inspectors will need a working knowledge of algebra, reading graphs, scientific notation, formulas, and use of some simple mathematics functions to understand the quantitative aspect of fire phenomena. A better understanding of these processes will improve the quality of fire protection inspections conducted by the U.S. Nuclear Regulatory Commission (NRC).

1.2 Objective

The primary objective of this NUREG is to provide a methodology for use in assessing potential fire hazards in the NRC-licensed NPPs. The methodology uses simplified, quantitative fire hazard analysis (FHA) techniques to evaluate the potential for credible fire scenarios. One purpose of these evaluations is to determine whether a potential fire can cause critical damage to safe-shutdown components, either directly or indirectly by igniting intervening combustibles. The methodology used in this NUREG is founded on material fire property data implemented in scientific calculations. In addition, the associated techniques have been assessed to ensure applicability and accuracy, and were derived primarily from the principles developed in the Society of Fire Protection Engineers (SFPE) *Handbook of Fire Protection Engineering*, and the National Fire Protection Association (NFPA) *Fire Protection Handbook*. The FHA methods have been implemented as Microsoft Excel® spreadsheets, which incorporate simple, empirical correlations and detailed mathematical equations based on fire dynamics principles. They also build on numerous tables of material fire property data, which have been assembled for NPPs. The combination of these spreadsheets and data tables forms the basis for the FDT^s.

1.3 Regulatory Background on Fire Protection for Nuclear Power Plants

The primary objectives of fire protection programs (FPPs) at the U.S. NPPs are to minimize both the probability of occurrence and the consequences of fire. To meet these objectives, the FPPs for operating NPPs are designed to provide reasonable assurance, through defense-in-depth (DID), that a fire will not prevent the performance of necessary safe-shutdown functions and that radioactive releases to the environment in the event of a fire will be minimized. Section II of Appendix R to 10 CFR Part 50, "General Requirements," states that the fire protection program

shall extend the concept of defense-in-depth to fire protection in fires areas that are important to safety, with the following objectives:

(1) Prevent fires from starting.

(2) Rapidly detect, control, and extinguish those fires that do occur.

(3) Protect structures, systems, and components that are important to safety so that a fire that is not promptly extinguished by the fire suppression activities will not prevent the safe shutdown of the plant.

The first element of this DID approach deals with preventing fires from starting. This can be accomplished by limiting fire sources that could initiate a fire during an accident at an NPP, and preventing any existing ignition sources from causing self-sustaining fires in combustible materials. Despite the nuclear industry's best efforts to eliminate or at least control ignition sources, accidental (and purposeful) sources of ignition often exist and can result in hostile fires. This is an important aspect of a total fire safety program, which should not be overlooked.

The second element of the prevention element deals with rapidly detecting, controling, and extinguishing those fires that do occur. This can achieved by preventing significant fires from occurring, given the inadvertent or purposeful introduction of an ignition source. If all structures and contents comprised totally noncombustible materials, this would not pose a problem. However, this is not the case. Buildings and their contents are composed of a variety of materials of various degrees of combustibility. Materials with higher thresholds of ignition and less hazardous combustion are continually being developed. Regardless, at least in some cases, the higher resistance to ignition can also result in a higher resistance to fire extinction (Hill, 1982). Electrical cables are a good example. While cables qualified to the Institute of Electrical and Electronic Engineers (IEEE) Standard 383 are more fire-resistant, they are also more difficult to extinguish once they ignite. In any case, the prevention of hostile fires will likely never be the total solution to the fire safety problem in NPPs.

The second element of the DID approach involves limiting fire spread through fire detection and fire suppression. There are various approaches to this element. In the event of a significant fire, its spread might be limited in the following ways:

- early human detection and manual suppression
- provision and maintenance of adequate fire detection and automatic fire suppression systems
- a combination of manual and automatic detection and suppression systems

Heat and smoke detectors; fire alarm systems; Halon 1301, carbon dioxide (CO_2), and dry chemical fire suppression systems; automatic sprinkler, foam, and water spray systems; portable fire extinguishers; hose stations, fire hydrants, and water supply systems; and fire brigades are all part of the second element of the DID approach. Each is highly developed in modern fire protection designs, and is constantly being further refined as fire technology advances. Nonetheless, the DID concept recognizes that the first two elements of fire defense are not always entirely successful in meeting the fire challenge.

The third element of the DID approach involves designing NPP structures, systems, and components (SSCs) to prevent significant damage in the event that the first two elements fail, either partially or fully. This goal may be fulfilled in the following ways:

- Isolate combustible elements by spatial separation, such that a fire in one fuel package will not propagate to any other fuel package.
- Isolate combustible elements by fire-resistant barriers to prevent fires from propagating from one area to another. In particular, fire-rated horizontal and vertical barrier systems will limit fire spread from compartment to compartment.

The NRC's regulatory framework for FPPs at U.S. NPPs is described in a number of regulatory and supporting guidelines, including but not limited to General Design Criterion (GDC) 3, as specified in Appendix R to Title 10, Part 50, of the *Code of Federal Regulations* (10 CFR Part 50); 10 CFR 50.48; Appendix R to 10 CFR Part 50; Regulatory Guide (RG) 1.189 and other regulatory guides, generic communications (e.g., generic letters, bulletins, and information notices), NUREG-series reports; the standard review plan (NUREG-0800); and associated branch technical positions (BTPs).

1.4 Fire Hazard Analysis for Nuclear Power Plants

As previously stated, fire protection for NPPs relies on the DID concept to achieve the required degree of reactor safety by using redundant levels of administrative controls, fire protection systems and features, and safe-shutdown capability. An FHA should be performed to assess the fire hazard and demonstrate that the NPP will maintain its ability to perform safe shutdown functions and minimize radioactive material releases to the environment in the event of a fire. RG 1.189 lists the following objectives for an FHA:

- Consider potential in situ and transient fire hazards.
- Determine the consequences of fire in any location in the plant, paying particular attention to the impact on the ability to safely shut down the reactor or the ability to minimize and control the release of radioactivity to the environment.
- Specify measures for fire prevention, fire detection, fire suppression, and fire containment, as well as alternative shutdown capability for each fire area containing SSCs that are important to safety in accordance with NRC guidelines and regulations.

1.5 Fire Protection Inspection Findings

Fire protection inspection findings are generally classified as weaknesses associated with one or more objectives of the DID elements introduced above. If a given inspection does not yield any DID-related findings against a fire protection feature or system, the fire protection feature and system are considered to be capable of performing their intended functions and operating in their normal (standby) state.

1.6 Fire Scenario Development for Nuclear Power Plants

In the broadest sense, a fire scenario can be thought of as a specific chain of events that begins with the ignition of a fire and ends either with successful plant shutdown or core damage. The fire is postulated to occur at a specific location in a specific fuel package, and to progress through

various stages of fire growth, detection, and suppression. In this process, the fire may damage some set of plant equipment (usually electrical cables). For a given fire source, the FHA may postulate damage to various sets of equipment, depending on how long the fire burns and how large the initial fire is presumed to be. The postulated or predicted fire damage may either directly or indirectly cause the initiating event (such as a plant trip, loss of offsite power, etc.).

When inspectors develop a fire scenario, they should postulate the worst-case, realistic fire, provided that the compartment and configuration of the fire area, room, or zone can support such a fire. For example, a large cabinet fire is one in which fire damage initially extends beyond the cabinet in which the fire originated. The fire damage attributed to a large cabinet fire often extends into the overhead cabling, an adjacent cabinet, or both. A large fire for a pump or motor can often be based initially upon the largest (worst-case) oil spill from the equipment. If the configuration of the compartment, combustibles, etc., supports further growth of the large fire, the fire scenario should postulate that growth. Since scenarios that describe large fires are normally expected to dominate the risk-significance of an inspection finding, scenarios with small fires typically are not included unless they spread and grow into large fires.

1.7 Process of Fire Development

Fire hazards to NPP equipment can arise from many sources, including (but not limited to) thermal damage, fouling, and corrosivity. Fire is essentially a chemical reaction involving solids, liquids, and gases that ignite and undergo a rapid, self-sustaining oxidation process, accompanied by the evolution of heat and light of varying intensities. However, the chemical and physical reactions that take place during a fire are extremely complex and often difficult or impractical to describe completely.

The most common fires start as a result of the ignition of solid or liquid fuels (combustible materials). Solid and liquid fuels typically become volatile and serve as suppliers of gaseous fuel to support combustion. In the physical model (illustrated in Figure 1-1) the process of fire development begins when the fuel surface starts to heat up as a result of heat transfer from the adjacent surroundings.

As the temperature of the fuel surface increases in response to this heat input, the fuel surface begins to emit fuel vapors. The fuel vapors mix (by convection and diffusion) with oxygen in the adjacent boundary layer, ignite (through a chemical reaction), and release additional heat. Some of this liberated heat energy may further increase the surface temperature of the fuel and thereby accelerate the fire growth process.

Many materials react with oxygen to some degree; however, various materials differ in their respective rates of reaction. The difference between slow-and rapid-oxidation reactions is that the latter occur so rapidly that heat is generated faster than it is dissipated, causing the material being oxidized (fuel) to reach its ignition temperature. Once a material reaches its ignition temperature, it ignites and continues to burn until either the fuel or the oxygen is consumed. The heat released during combustion is usually accompanied by a visible flame. However, some materials (such as charcoal) smolder, rather than producing a visible flame.

A familiar slow-oxidation reaction is the rusting of iron. Such a reaction releases heat so slowly that the temperature hardly increases more than a few degrees above the temperature of the

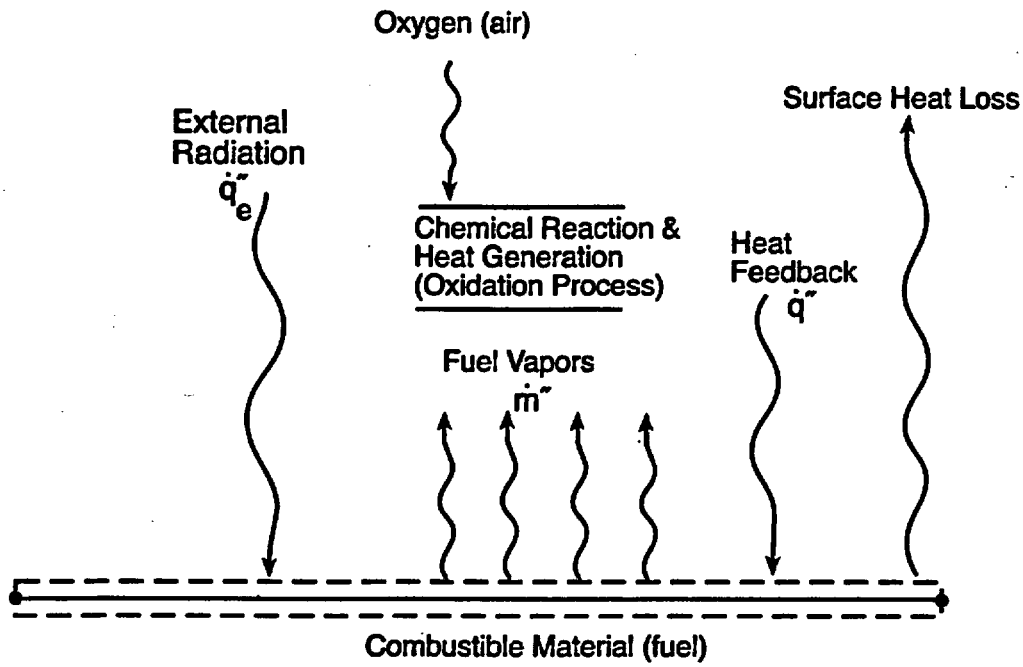

Figure 1-1 Physical Process of Combustion and Fire

surroundings. These slow reactions typically do not cause fires and, as such, are not considered combustion.

Generally, three components are required to support combustion. These three components—fuel, oxygen and heat source—are depicted in Figure 1-2, which is commonly called the fire triangle. The fire triangle shows that for combustion to occur, fuel, an oxidizing agent, and a heat source must be present in the same place at the same time. If any one of the legs of the triangle is removed, the combustion process will not be sustained. This is the most basic description of the fire phenomenon. It is applicable for most scenarios, with the exception of fire extinguishment involving dry chemicals and Halons.

1.8 The Fire Hazards

The fire load of NPPs is different than that of fossil-fuel power plants and many other industrial plants. The NPP does not have a constant flow of fuel (e.g., coal or oil) as the hazard. However, the NPP may have similar fire hazards, such as grouped electrical cables and lubricating oils (e.g., turbine, reactor coolant pumps.) Table 1-1 lists the combustibles and hazardous materials that are commonly present in NPPs.

Table1-1. Common Combustible and Hazardous Materials in NPPs
Combustible solid fuels Cable insulation and jackets Other thermal and electric insulation materials (e.g., pipe insulation) Building materials Combustible metal deck and roof assemblies Filtering materials including charcoal and high-efficiency particulate air (HEPA) filters Packing materials and waste containers Flexible materials used in connection with a seismic design, including flexible joints Sealing materials (e.g., asphalt, silicone foam, neoprene, etc.) Solidification agents for packing compacted radioactive waste conditioning (e.g., bitumen) Low-level radioactive waste material (e.g., paper, plastic, anti-C-zone clothing, rubber shoes and gloves, overalls, etc.)
Combustible and flammable liquid fuels Lubricants, hydraulic oil, and control fluids Conventional fuels for emergency power units, auxiliary boilers, etc. Paints and solvents
Explosive and flammable gaseous fuels Hydrogen to cool the generators Propane or other fuel gases, such as those used for starting boilers, burning radwaste, etc. Oxygen and hydrogen radiolysis of reactor coolant water within the pressure vessel and addition of hydrogen for improved recombination Hydrogen generated in battery room as a result of overcharging a battery

The quantities and locations of these combustibles vary among NPPs. More importantly, identification of these combustibles and their characteristics only partially identifies the associated fire hazard. The bearing that the fire hazards have on nuclear safety must also be considered in

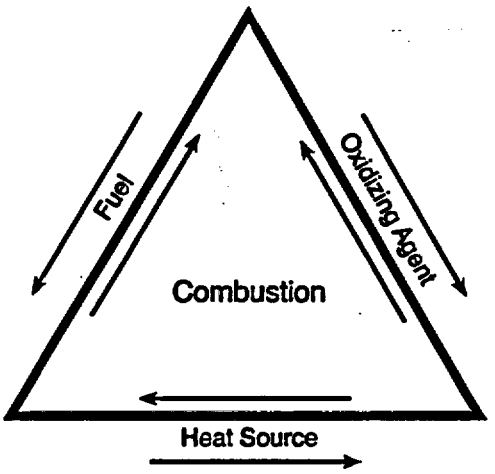

Figure 1-2 The Fire Triangle

defining the *total* fire hazard. Nuclear safety factors include maintaining the safe-shutdown capability and preventing radiation releases that exceed acceptable limits.

Fire hazards related to NPPs include (but are not limited) to the following examples:

- fire hazard associated with electrical cable insulation
- fire hazard of ordinary combustibles
- oil fire hazards associated with large reactor coolant pump motors
- oil fire hazard involving emergency turbine-driven feedwater pumps
- diesel fuel fire hazard at diesel-driven generators
- fire hazard involving charcoal in filter units
- fire hazard associated with flammable offgases
- fire hazard of protective coatings
- fire hazard of turbine lube oil and hydrogen seal oil
- hydrogen cooling gas fire hazard in turbine generator buildings
- fire hazard associated with electrical switchgear, motor control centers (MCCs), electrical cabinets, load centers, inverter, circuit boards, and transformers

1.8.1 Combustible Materials Found in Nuclear Power Plants

Combustible materials may be found in both large and small concentrations in NPPs. One can assume that outbreaks of fire may occur as a result of a variety of ignition sources. In general, the combustible materials in an NPP can be divided into four broad fuel categories, including (1) transient solid and liquid fuels, (2) in situ combustible consisting both solid and liquid fuels, (3) liquid fuels used in NPP equipment, and (4) explosive and flammable gases, as described in the following sections.

1.8.1.1 Transient Combustibles

Solid transient fuels include general trash, paper waste, wood, plastics, cloth, and construction/modification materials. By contrast, liquid transient fuels commonly include cleaning solvents, paints, and lubricants being transported through the NPP for maintenance of plant equipment. These fuels are generally found in small quantities in most NPP areas at any given time.

1.8.1.2 In Situ Combustibles

The most common category of potential fuels found in NPPs are in situ solid fuel elements. Of these, the largest single potential fuel source is cable insulation and jacketing materials. Several factors combine to support the conclusion that cable insulation and jacketing material far and away represent the most important materials to be considered in an NPP FHA. Cable insulation and jackets are typically manufactured using organic compounds and, therefore, they will burn under the proper circumstances.

The fire hazard associated with electrical cable insulation and jackets in NPPs is similar to that of other occupancies (e.g., telephone exchange) that use cable trays to support a large number of power, control, and instrument cables. However, an additional factor in NPPs is the added hazard associated with loss of redundancy.

A wide variety of cable insulation and jacketing materials can be commonly found in any given NPP. Cable insulation and jackets commonly encountered in an NPP include materials based on the following compounds:

- acrylonitrile-butadiene-styrene (ABS)
- chlorinated polyvinylchloride (CPVC)
- chlorosulfonated polyethylene rubber (CSP or CSM) (Hypalon®)
- chlorotrifluoroethylene (CTEF) (Kel-F®)
- cross-linked polyolefin (XLPO) including more specific class of cross-linked polyethylene (XLPE)
- ethylenetetrafluoroethylene (ETFE) (Tefzel®)
- ethylene-propylene rubber (EPR)
- florinated polyethlene-propypropylene (FEP) (Teflon®)
- neoprene or chloroprene rubber (CR)
- polycarbonate (PC)
- polyethylene (PE)
- polyethylene fluoride (PEF)
- polyethersulphone (PES)
- polypropylene (PP)
- polystyrene (PS)
- polytetrafluroethylene (PTEF) (Teflon®)
- polyurethane (PU)
- polyvinyl chloride (PVC)
- silicone and silicone/rubber compounds
- styrene-butadiene rubber (SBR)
- tetrafluoroethylene (TFE) (Teflon®)
-

1.8.1.3 Liquid Fuels

Liquid fuels include lubricating and cooling oils, cleaning solvents, and diesel fuels. These items are commonly used in pumps, motor generators, hydraulic-operated equipment, diesel-driven engines, transformers, and other equipment that requires lubrication and cooling with heat transferring oils. Fire involving such types of equipment is relatively common and usually results from leakage or overheating.

1.8.1.4 Explosive and Flammable Gases

Explosive and flammable gases are often present in an NPP. The most common is hydrogen, which is present as a blanket inside the main generator and a byproduct of reactor operation (through dissociation of water). Battery rooms in NPPs are also a source of hydrogen gas production.

Gases can be categorized as flammable and nonflammable. In addition, some gases are not flammable but support combustion. For example, oxygen does not burn; however, most fires burn more rapidly if the oxygen concentration is increased.

A general word of caution about gaseous fuels: when a compressed gas, like butane, is released, the visible vapor cloud indicates that the gas is colder than the air temperature and, consequently,

condensing the moisture in the air. It appears much like a fog; however, this visible cloud is not the extent of the gaseous vapor. This is because the vapor disappears from view as it warms up, but may still linger in the area. Thus, it is possible to stand in an invisible gaseous vapor with a concentration that is within the flammable range. If the vapor were to ignite, the person could be burned severely, if not killed.

1.9 Location of the Fire

Exposure fires involving transient combustibles are assumed to have an equal probability of occurring anywhere in a space or an enclosure, while fires involving fixed combustibles are assumed to occur at the site of the fixed combustible. Since the hazard is greater when a fire is located directly beneath a target (cable tray or electrical cabinet), this placement is normally evaluated for scenarios involving transient combustibles. For fixed combustibles, the actual geometry between the source and the target is evaluated to determine whether the target is located in the fire plume or ceiling jet region.

1.10 Risk-Informed, Performance-Based Fire Protection

Risk-informed, performance-based fire protection is an integration of decision-based and quantitative risk assessment with a defined approach for quantifying the performance success of fire protection systems (FPSs) (Berry, 2002).

Performance-based fire safety engineering is defined as "An engineering approach to fire protection design based on (1) agreed upon fire safety goals, loss objectives, and design objectives; (2) deterministic and probabilistic evaluation of fire initiation, growth, and development; (3) the physical and chemical properties of fire and growth effluents; and (4) a quantitative assessment of the effectiveness of design alternatives against objectives," (Custer and Meacham, 1997).

One primary difference between prescriptive and performance-based designs is that a fire safety goal, life safety, property protection, mission continuity, and environmental impact are explicitly stated in the performance-based design, while prescriptive requirements may inhibit fire safety components from the design. Performance-based fire protection design is widely used by various countries around the world including United States. The application of performance-based approach to fire safety analysis will certainly continue to gain widespread acceptance in the future as an alternative to prescriptive building and fire codes.

Risk is a quantitative measure of fire incident loss potential in terms of both the event likelihood and aggregate consequences. In the risk-informed approach, the analyst factors if the severity of a fire, as well as the likelihood that the fire will occur. For example, based on the knowledge and experience of the equipment operator, a fire in a given turbine generator is likely to occur 80-percent of the time. Similarly based on the knowledge and experience of the fire protection engineer, the sprinkler system protecting that generator is 90-percent likely to contain and control that fire. Because the risk-informed, performance-based methodology quantifies the likelihood of a fire hazard and the likelihood that the fire protection system will contain or control the fire, it provides a more realistic prediction of the actual risk.

The risk-informed, performance-based approach presents a more realistic predication of potential fire hazards for a given system or process or for an entire operation. The performance-based approach provides solutions based on performance to established goals, rather than on prescriptive requirements with implied goals. Solutions are supported by operator and management about processes, equipment, and components; the buildings or structural housing them; operation data and maintenance personnel; and the fire protection systems in place. Published performance data pertaining to these aspects are also incorporated into the analysis.

1.11 Data Sources for Combustible Materials Found in Nuclear Power Plants

The following references provide fire property data related to NPPs:

Chavez, J.M., "An Experimental Investigation of Internally Ignited Fires in Nuclear Power Plant Control Cabinets: Part I, Cabinet Effects Tests," NUREG/CR-4527, Volume 2, U.S. Nuclear Regulatory Commission, Washington, DC, April 1987.

Chavez, J.M., "An Experimental Investigation of Internally Ignited Fires in Nuclear Power Plant Control Cabinets: Part II, Room Effects Tests," NUREG/CR-4527, Volume 1, U.S. Nuclear Regulatory Commission, Washington, DC, November 1988.

Chavez, J.M., and L.D. Lambert, "Evaluation of Suppression Methods for Electrical Cables Fires," NUREG/CR-3656, U.S. Nuclear Regulatory Commission, Washington, DC, October, 1986.

Chan, M.K.W., and J. Mishima, "Characteristics of Combustion Products: A Review of the Literature," NUREG/CR-2658, U.S. Nuclear Regulatory Commission, Washington, DC, July 1983.

Cline, D.D., W.A., Von Riesemann, and J.M. Chavez, "Investigation of Twenty-Foot Separation Distance as a Fire Protection Method as Specified in 10 CFR 50, Appendix R," NUREG/CR-3192, U.S. Nuclear Regulatory Commission, Washington, DC, October 1983.

Cooper, L.Y., and K.D. Steckler, "Methodology for Developing and Implementing Alternative Temperature-Time Curves for Testing the Fire Resistance of Barriers for Nuclear Power Plant Applications," NUREG-1547, U.S. Nuclear Regulatory Commission, Washington, DC, August 1996.

Delichatsios, M.A., "Categorization of Cable Flammability Detection of Smoldering and Flaming Cable Fires," EPRI-NP-1630, Electric Power Research Institute, Palo Alto, California. November 1980.

Dey, M., A.A. Azarm, R. Travis, G. Martinez-Guridi, and R. Levine, "Technical Review of Risk-Informed, Performance-Based Methods for Nuclear Power Plant Fire Protection Analysis," NUREG-1521, Draft Report for Public Comments, U.S. Nuclear Regulatory Commission, Washington, DC, July 1988.

Keski-Rahkonen, O., J. Mangs, and A. Turtola, "Ignition of and Fire Spread on Cables and Electronic Components," VTT Publication 387, Technical Research Center of Finland, Espoo, Finland, 1999.

Klamerus, L.J., "Electrical Cables Fire Suppression Tests with Halon 1301," SAND81-1785, Sandia National Laboratories, Albuquerque, New Mexico, August 1981.

Lee, B.T., "Heat Release Rate Characteristics of Some Combustibles Fuel Sources in Nuclear Power Plants," NBSIR 85-3195, U.S. Department of Commerce, National Bureau of Standards (NBS), Washington, DC, July 1985.

Lee, J.L., and R.F. Pion, "Categorization of Cable Flammability, Part I: Laboratory Evaluation of Cable Flammability Parameters," EPRI-NP-1200, Electric Power Research Institute, Palo Alto, California, July 1980.

Lee, J.L. ,"A Study of Damageability of Electrical Cables in Simulated Fire Environments," EPRI NP-1767, Electric Power Research Institute, Palo Alto, California, March 1981.

Lukens, L.L., "Nuclear Power Plant Electrical Cable Damageability Experiments," NUREG/CR-2927, U.S. Nuclear Regulatory Commission, Washington, DC, October 1982.

Mangs, J., and O. Keski-Rahkonen, "Full-Scale Fire Experiments on Electronic Cabinets," VTT Publication 186, Technical Research Center of Finland, Espoo, Finland 1994.

Mangs, J. J., Paananen, and O. Keski-Rahkonen, "Calorimetric Fire Experiments on Electronic Cabinets," *Fire Safety Journal*, Volume 38, No. 2, pp. 165–186: 2003.

Mangs, J., and O. Keski-Rahkonen, "Full-scale Fire Experiments on Electronic Cabinets," VTT Publication 186, Technical Research Center of Finland, Espoo, Finland 1994.

Newman, J.S., and J.P. Hill, "Assessment of Exposure Fire Hazards to Cable Trays," EPRI NP-1675, Electric Power Research Institute, Palo Alto, California, January 1981.

Nicolette, V.F., and S.P. Nowlen, "A Critical Look at Nuclear Electrical Cable Insulation Ignition and Damage Thresholds," SAND-88-2161C, Sandia National Laboratories, Albuquerque, New Mexico, 1989.

Nowlen, S.P., "Heat and Mass Release for Some Transient Fuel Sources Fires: A Test Report," NUREG/CR-4680, U.S. Nuclear Regulatory Commission, Washington, DC, October 1986.

Nowlen, S.P., "Quantitative Data on the Fire Behavior of Combustible Materials Found in Nuclear Power Plants: A Literature Review," NUREG/CR-4679, U.S. Nuclear Regulatory Commission, Washington, DC, February 1987.

Nowlen, S.P., "A Summary of Nuclear Power Plant Fire Safety Research at Sandia National Laboratories, 1975–1987," NUREG/CR-5384, U.S. Nuclear Regulatory Commission, Washington, DC, December 1989.

Ramsey, C.B., and M. Modarres, *Commercial Nuclear Power, Assuring Safety for the Future*, Chapter 7, "Nuclear Fire Protection (An Example of External Event Analysis)," John Wiley & Sons, Inc., New York, pp. 295–363, 1998.

Raughley, W.S., and G.F. Lanik, "Operating Experience Assessment Energetic Faults in 4.16-kV to 13.8-kV Switchgear and Bus Ducts that Caused Fires in Nuclear Power Plants 1986–2001," ADAMS Accession # ML021290359, Office of Nuclear Regulatory Research, U.S. Nuclear Regulatory Commission, Washington, DC, February 2002.

Salley, M.H., "An Examination of the Methods and Data Used to Determined Functionality of Electrical Cables When Exposed to Evaluated Temperatures as a Result of a Fire in a Nuclear Power Plant," Master of Science Thesis, Department of Fire Protection Engineering, University of Maryland, College Park, Maryland 2000.

Sumitra, P.S., "Categorization of Cable Flammability, Intermediate-Scale Fire Tests of Cable Tray Installations," Interim, Report, EPRI-NP-1881, Electric Power Research Institute, Palo Alto, California, August 1981.

Tanaka, T.J., S.P. Nowlen, and D.J. Anderson, "Circuit Bridging of Components by Smoke," NUREG/CR-6476, U.S. Nuclear Regulatory Commission, Washington, DC, October 1996.

Tanaka, T.J., "Effects of Smoke on Functional Circuits," NUREG/CR-6543, U.S. Nuclear Regulatory Commission, Washington, DC, October 1997.

Tanaka,T.J., E. Baynes, S.P. Nowlen, J. Brockmann, L. Gritzo, S. Christopher, "LDRD Report: Smoke Effects on Electrical Equipment, SAND2000-0599, Sandia National Laboratories, Albuquerque, New Mexico, March 2000.

Wyant, F.J., and S.P. Nowlen, "Cable Insulation Resistance Measurements Made During Cable Fire Tests,"NUREG/CR-6776, U.S. Nuclear Regulatory Commission, Washington, DC, June 2002.

1.12 References

Barry, T.F., *Risk-Informed, Performance-Based Industrial Fire Protection*, Tennessee Valley Publishing, Knoxville Tennessee, 2002.

Code of Federal Regulations, Title 10, *Energy*, Section 50.48, "Fire Protection," U.S. Government Printing Office, Washington DC.

Code of Federal Regulations, Title 10, *Energy*, Part 50, Appendix A, "General Design Criterion 3-Fire Protection," U.S. Government Printing Office, Washington DC.

Code of Federal Regulations, Title 10, *Energy*, Part 50, Appendix R, "Fire Protection Program for Nuclear Power Facilities Operating Prior to January 1, 1979," U.S. Government Printing Office, Washington DC.

Custer, R.L.P., and B.J. Meacham, *Introduction to Performance-Base Fire Safety*, Society of Fire Protection Engineers, Boston, Massachusetts, 1997.

Hill, J.P., "Fire Tests in Ventilated Rooms: Extinguishment of Fire in Grouped Cable Trays," EPRI NP-2660, Electric Power Research Institute, Palo Alto, California, 1982.

Nuclear Regulatory Commission (U.S.) (NRC). Fire Protection for Operating Nuclear Power Plants, Regulatory Guide 1.189, April 2001.

Nuclear Regulatory Commission (U.S.) (NRC). APCSB 9.5-1 - Guidelines for Fire Protection for Nuclear Power Plants. May 1, 1976.

Nuclear Regulatory Commission (U.S.) (NRC). Appendix A to APCSB 9.5-1 - Guidelines for Fire Protection for Nuclear Power Plants, Docketed Prior to July 1, 1976, February 24, 1977.

Nuclear Regulatory Commission (U.S.) (NRC). ASB 9.5-1 - Guidelines for Fire Protection for Nuclear Power Plants, Revision 1, March 1979.

Nuclear Regulatory Commission (U.S.) (NRC). CMEB 9.5-1 (Formerly ASB 9.5-1) - Guidelines for Fire Protection for Nuclear Power Plants, Revision 2, July 1981.

CHAPTER 2. PREDICTING HOT GAS LAYER TEMPERATURE AND SMOKE LAYER HEIGHT IN A ROOM FIRE WITH NATURAL AND FORCED VENTILATION

2.1 Objectives

This chapter has the following objectives:

- Explain the different stages of a compartment fire.
- Identify the types of forced and natural ventilation systems.
- Explain how the various types of forced ventilation systems work.
- Describe how to calculate the hot gas layer temperature and smoke layer height for a fire in a compartment with both natural and forced ventilation systems.

2.2 Introduction

In evaluating the environmental conditions resulting from a fire in an enclosure, it is essential to estimate the temperature of the hot fire gases. These elevated temperatures can often have a direct impact on NPP safety. A temperature estimate is also necessary in order to predict mass flow rates in and out through openings, thermal feedback to the fuel and other combustible objects, and thermal influence (initiating stimulus) on detection and suppression systems. Heat from a fire poses a significant threat to the operation of NPP, both when the component and equipment come in contact with heated fire gases and when heat is radiated from a distance.

2.3 Compartment Fire Growth

A compartment or enclosure fire is usually a fire that is confined to a single compartment within a structure. Ventilation is achieved through open doors and windows, as well as heating, ventilation, and air-conditioning (HVAC) systems. Such a fire typically progresses through several stages (or phases) as a function of time, as discussed in the next section.

2.3.1 Stages of Compartment Fires

Initially, fire in a compartment can be treated as a freely burning, unconfined fire. This treatment is a valid approximation until thermal feedback or oxygen depletion in the compartment becomes significant. In many ventilated spaces, the ventilation is stopped automatically under fire conditions, either through the shutdown of fan units or the closing of fire doors and dampers. In other spaces, however, ventilation systems may continue to operate or unprotected openings may remain open. The course of compartment fires, and the conditions that result, depend on the following variables (among others):

- fire heat release rate (HRR) of the combustible
- enclosure size
- enclosure construction
- enclosure ventilation

Conceptually, compartment fires can be considered in terms of the four stages illustrated in Figures 2-1 and 2-2. The initial stage of compartment fires is the fire plume/ceiling jet phase. During this

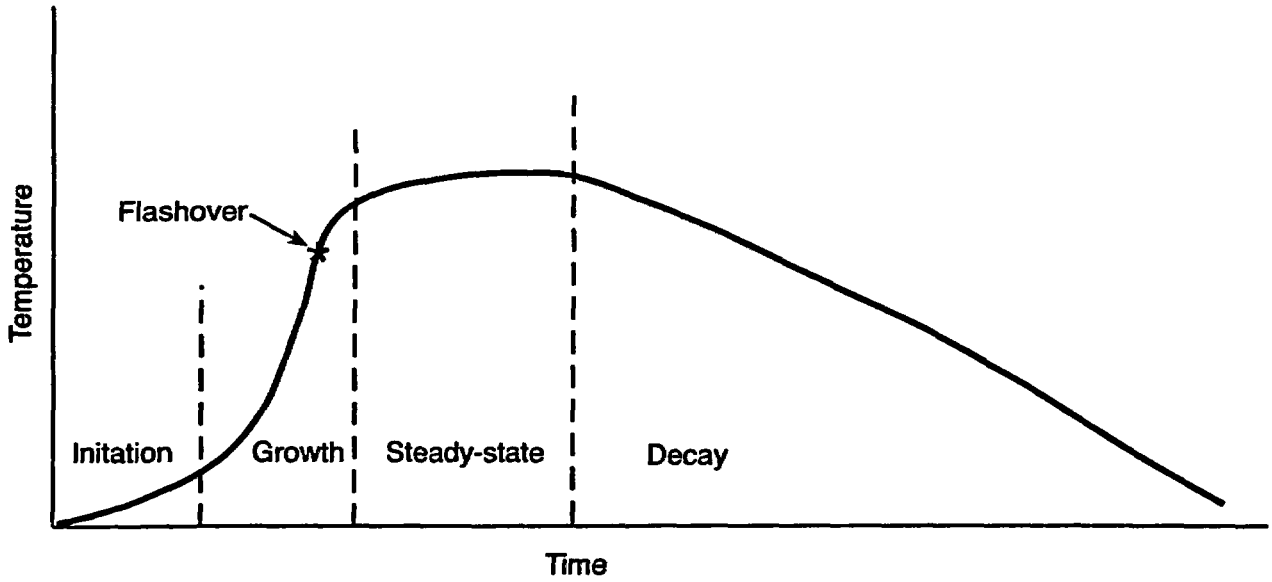

Figure 2-1 Typical Stages of Fire Development

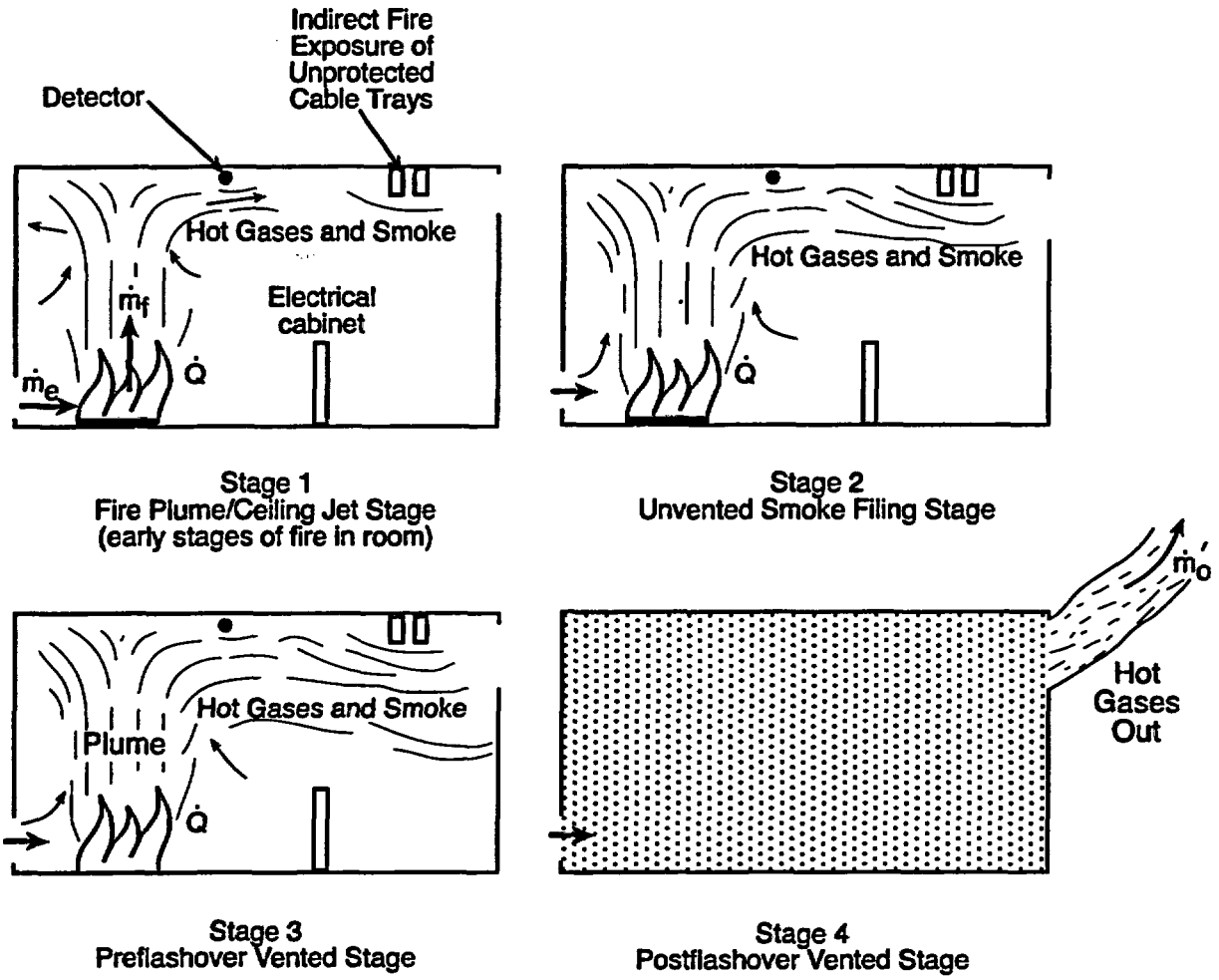

Figure 2-2 Stages of Compartment Fire

stage, buoyant hot gases rise to the ceiling in a plume above the fire and spread radially beneath the ceiling as a relatively thin jet. As the plume gases rise to the ceiling, they entrain cool, fresh air. This entrainment decreases the plume temperature and combustion product concentrations, but increases the volume of smoke. The plume gases impinge upon the ceiling and turn to form a ceiling jet, which can continue to extend radially until it is confined by enclosure boundaries or other obstructions (such as deep solid beams at the ceiling level).

Once the ceiling jet spreads to the full extent of the compartment, the second stage of compartment fires ensues. During this stage, a layer of smoke descends from the ceiling as a result of air entrainment into the smoke layer and gas expansion attributable to heat addition to the smoke layer. The gas expansion, in turn increases the average temperature of the smoke layer. However, the continuing entrainment of cool, fresh air into the smoke layer tends to slow this temperature increase.

The duration of this second stage (an unventilated compartment smoke filling phase) depends on the HRR of the fuel, the size and configuration of the compartment, the heat loss histories, and the types and locations of ventilation openings in the compartment. In closed compartments, the smoke layer continues to descend until the room is filled with smoke or until the fire source burns out, as a result of either fuel consumption or oxygen depletion. In ventilated compartments, the smoke layer descends to the elevation where the rate of mass flow into the smoke layer is balanced by the rate of flow from the smoke layer through natural or mechanical ventilation.

The preflashover vented fire stage begins when smoke starts to flow from the compartment. Ventilation may occur naturally through openings in compartment boundaries (such as doorways), or it may be forced by mechanical air handling systems. The smoke layer may continue to expand and descend during the preflashover vented fire stage.

The final stage of compartment fires, known as the postflashover vented phase, represents the most significant hazard, both within the fire compartment and as it affects remote areas of a building. This stage occurs when thermal conditions within the compartment reach a point at which all exposed combustibles ignite, virtually simultaneously in many cases, and air flow to the compartment is sufficient to sustain intense burning. During this stage, the rate of air flow into the compartment and, consequently, the peak rate of burning within the compartment, become limited. The ventilation is limited by the sizes, shapes, and locations of boundary openings for naturally ventilated spaces, or by the ventilation rate from mechanically ventilated spaces. With adequate ventilation, flames may fill the enclosure volume and result in a rapid change from a developing compartment fire to full compartment involvement. This point is commonly referred to as "flashover." Flashover is the point in compartment fire development which can evolve as a rapid transition from a slowly growing to fully developed fire. The underlying mechanism in this phenomenon is essentially a positive feedback from the fire environment to the burning fuel. The formation of a hot ceiling layer at the early stages of a fire leads to radiative feedback to the fuel, which, in turn, increases the burning rate and the temperature of the smoke layer. If heat losses from the compartment are insufficient, a sharp increase in the fire's power (i.e., flashover) will eventually occur.

The International Standards Organization (ISO) formally defines flashover as "the rapid transition to a state of total surface involvement in a fire of combustion material within an enclosure." In fire protection engineering, the term is used as the demarcation point between the preflashover and postflashover stages of a compartment fire. Flashover is not a precise term, and several variations

in its definition can be found in the literature. The criteria given usually require that the temperature in the compartment reaches 500 to 600 °C (932 to 1,112°F), the radiation heat transfer to the floor of the compartment is 15 to 20 kW/m^2 (1.32 to 1.76 Btu/ft^2-sec), or flames appear from the compartment openings. In a compartment with one opening, flashover is principally described by four stages. Specifically, the hot buoyant plume develops at the first stage following ignition, and then reaches the ceiling and spreads as a ceiling jet during the second stage. During the third and fourth stages, the hot layer expands and deepens, while flow through the opening is established.

Flashover usually causes the fire to reach its fully developed state, in which all of the fuel within the room becomes involved. However, all of the fuel gases may not be able to combust within the room because the air supply is limited. Such an air-limited fire is commonly termed "ventilation-limited" or "ventilation-controlled", as opposed to a "fuel-limited" fire, which is a fire that has an ample supply of oxygen and is limited by the amount of materials (fuel) burning.

2.3.2 Ventilation-limited or Ventilation-controlled Fires

A ventilation-limited or ventilation-controlled fire is one that experiences low oxygen concentration as a result of insufficient air supply. The hot fire gases typically have nearly zero oxygen.

2.3.3 Fuel-limited Fires

In contrast to a ventilation-limited fire, a fuel limited fire is a compartment fire in which the air supply is sufficient to maintain combustion, but the amount of fuel that is burning limits the fire size.

2.4 Compartment Ventilation

Mechanical or forced ventilation is accomplished with fans to create the pressure differentials to produce the desired flows of air. Exhaust in the ventilation process that draws noxious air entrained particulate and vapors from a compartment, collect them into ducts for transport to the outside or to equipment that cleans the air before discharging it to the outside or returning it to the area of origin. In a closed area, exhaust cannot operate at the flows required without having an equal supply of makeup air available. "Makeup air" and "replacement air" are the terms commonly used to refer to the air that has to be brought into a space to limit pressure gradients so that the exhaust process can operate as designed. This air may be brought directly into a space via ducts or indirectly via openings from adjacent areas. The quantity of makeup air must be of a sufficient flow rate to allow the exhaust system to operate within its pressure differential design parameters, yet not be so great as to create a positive pressure within the compartment.

Mechanically ventilated compartments are a common environment for fire growth in NPP structures. A fire in a forced-ventilation compartment is markedly different than in a compartment with natural ventilation. An important factor is that the stratified thermal hot gas layer induced by the fire in a naturally ventilated compartment might be unstable in a forced ventilation compartment. Normally, a ventilating system recirculates most of the exhaust air. If normal operation were to continue during a fire, this recirculation could result in smoke and combustion products being mixed with supply air, and the contaminated mixture being delivered throughout the ventilation zone. To prevent this, dampers are often placed in the system. Upon fire detection in an engineered smoke control system, the damper positions are changed so that all exhaust from the fire zone is dumped, and 100-percent makeup air is drawn from outside the building.

Mechanically ventilated spaces are generally easier to analyze than naturally ventilated spaces since the ventilation rate is known with better precision. The volumetric flow rate is a function of pressure-flow characteristics of the fan units serving the space, as well as the operating control procedures followed under fire conditions. The following four general types of mechanical ventilation systems are commonly encountered as illustrated in Figure 2-3:

- *Push Systems* - Push systems mechanically supply fresh (outside) air into a compartment at the design volumetric flow rate of the system, while air expulsion occurs freely through transfer grills, registers, or diffusers in the compartment.

- *Pull Systems* - Pull systems mechanically extract hot gases (smoke) from a compartment. Pull systems are designed to extract smoke from a compartment based on the volumetric flow rate of the system. The density of smoke is normally less than that of ambient air because the smoke is at an elevated temperature.

- *Push-Pull Systems*- Push-pull systems both inject and extract air mechanically, with the supply and exhaust fan units typically sized and configured to produce balance supply and exhaust rates under normal operation. Push-pull systems cannot continue to operate at their balanced design flow rate under fire conditions. If the supply and exhaust fan units continue to inject and extract air at the same balanced design volumetric flow rates, the rate of mass injection will exceed the rate of mass extraction because of the difference in the densities of the supply and exhaust streams.

- *Recirculation Systems* - Recirculation systems typically use a single fan unit to mechanically extract air from a space, condition it, and return it to the same space.

2.4.1 Definitions

Volume Flow Rate handled by the fan is the number of cubic feet of air per minute (cfm) expressed at fan inlet conditions.

Fan Total Pressure Rise is the fan total pressure at the outlet minus the fan total pressure at ath inlet (in. of water).

Fan Velocity Pressure is the pressure corresponding to the average velocity determined from the volume flow rate and fan outlet area (in. of water).

Fan Static Pressure Rise is the fan total pressure rise diminished by the fan velocity pressure. The fan inlet velocity head is assumed to be equal to zero for fan rating purposes (in. of water).

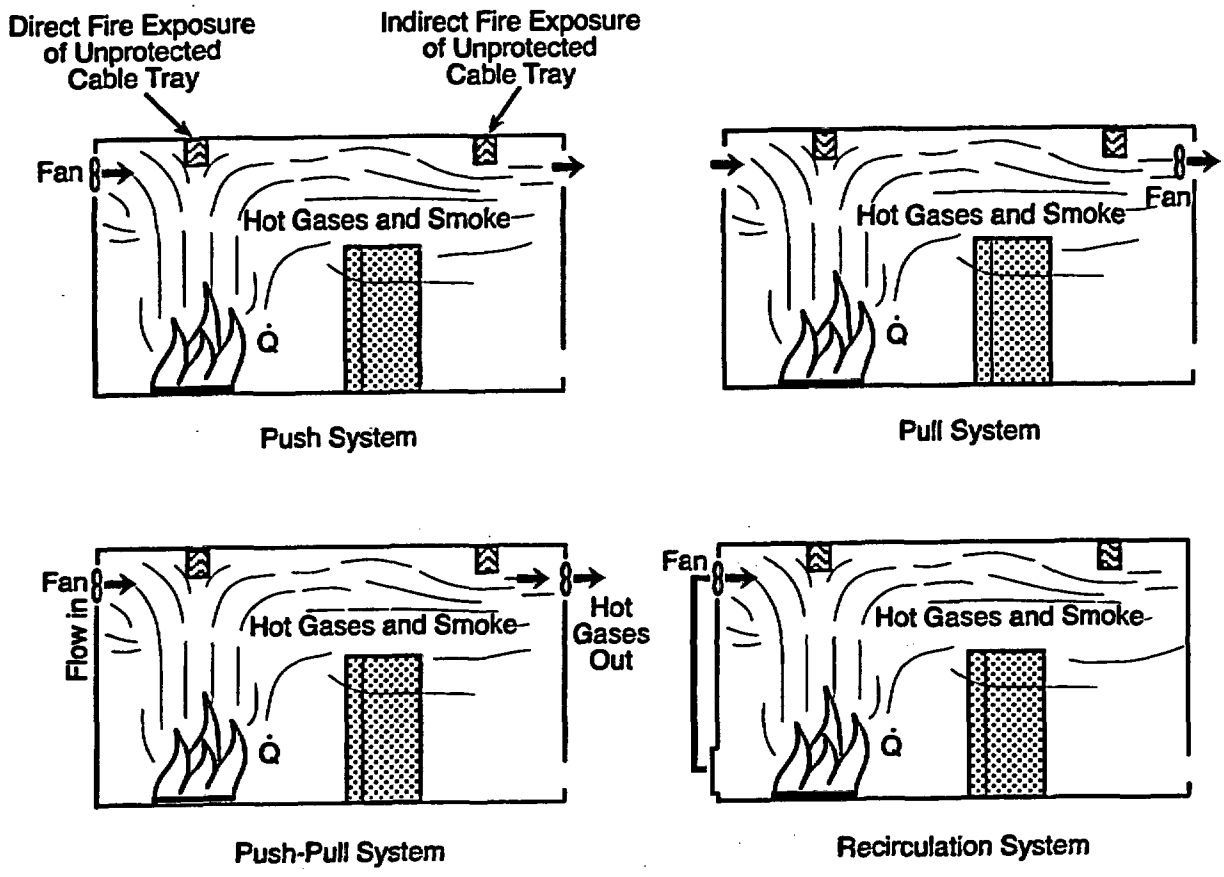

Figure 2-3 Types of Mechanical Ventilation Systems

2.5 Temperature

When discussing gases, temperature is a measure of the mean kinetic energy of the molecules in a gas. Temperature defines the conditions under which heat transfer occurs. A gas temperature, T_g, describes precisely the state of the average molecular energy in that gas. However that description is not particularly useful for the purposes of describing the physical phenomena that are relevant to fire science. In a broad sense, temperature can be thought of as a measure of the state of a system. Materials behave differently at different temperatures. Water, for example, at atmospheric pressure, is solid below 0 °C (32 °F), liquid between 0 °C (32 °F) and 100 °C (212 °F), and gaseous above 100 °C (212 °F). Similarly, plastic materials begin to gasify at a certain temperature. At a slightly higher temperature, they gasify enough to ignite, and at still higher temperatures, they may self-ignite. For our purpose, then, temperature can be viewed as an indicator of the state of an object system.

There are standard ways to define temperature. The most common are the Fahrenheit and Celsius scales of temperature. Related to these scales is the Kelvin absolute temperature scale[1]. The correspondence between the scales is illustrated in Table 2-1.

Table 2-1. Temperature Conversions

Original Unit	Conversions		
	Celsius, T_C	Fahrenheit, T_F	Kelvin, T_K
Celsius, T_C	-	$9/5\ (T_C) + 32$	$T_C + 273.15$
Fahrenheit, T_F	$5/9\ (T_F - 32)$	-	$5/9\ (T_F + 459.7)$
Kelvin, T_K	$T_K - 273.15$	$9/5(T_K - 255.37)$	-

The difference between the relative temperature scale and its absolute counterpart is the starting point of the scale. That is, 0 °C is equal to 273 Kelvin and each degree on the Celsius scale is equal to 1 degree on the Kelvin scale. By contrast, the English unit temperature scale and SI (metric) unit temperature scale differ in two main ways. Specifically, zero is defined differently in Celsius than in Fahrenheit, and one degree Fahrenheit represents a different quantity of heat than one degree Celsius for a given heat capacity and mass. It is important to remember that these temperature scales are arbitrary, but they relate to important physical processes and the effect of temperature on an object is what we are really interested in.

Table 2-2 lists the critical temperatures for different exposure conditions and the resultant effects on humans.

[1]The Rankine scale is used for absolute zero in the English units. Since most fire dynamics equations will be solved in SI units, it will not be discussed here.

Table 2-2. Critical Temperatures for Different Exposure Conditions and Effects on Humans [Chartered Institution of Building Services Engineers (CIBSE) Guide E, 1997] (Waiting for copyright permission)		

In order to calculate or predict the temperatures in a compartment, a description or analytical approximation of the fire phenomena must be created in quantitative terms. This approximation is described in terms of physical equations for chemistry, physics, mathematics, fluid mechanics, and heat and mass transfer, which can be solved to predict the temperature in the compartment. Such an approximation, therefore, is an idealization of the compartment fire phenomena (i.e., ignition, flame spread, and burning rate).

2.6 Estimating Hot Gas Layer Temperature

This section presents methods predicting the temperature achieved by the hot gas layer in an enclosure fire; these methods are currently the most widely accepted in the fire protection engineering literature. Nonetheless, the methods employ assumptions and limitations, which must be understood before using any of the methods presented.

2.6.1 Natural Ventilation: Method of McCaffrey, Quintiere, and Harkleroad (MQH)

The temperatures throughout a compartment in which a fire is burning are affected by the amount of air supplied to the fire and the location at which the air enters the compartment. Ventilation-limited fires produce different temperature profiles in a compartment than well-ventilated fires.

A compartment with a single rectangular wall opening (such as a door or window) is commonly used for room fire experiments. They also are commonly involved in real fire scenarios, where a single door or vent opening serves as the only path for fire-induced natural ventilation to the compartment. The hot gas layer that forms in compartment fires descends within the opening until a quasi-steady balance is struck between the rate of mass inflow to the layer and the rate of mass outflow from the layer.

A complete solution of the mass flow rate in this scenario requires equating and solving two non-linear equations describing the vent flow rate and the plume entrainment rate as a function of the layer interface height (the layer in a compartment that separates the smoke layer from the clear layer). If it is nonvented, the smoke layer gradually descends as the fire increases, thereby lowering the smoke interface and (possibly) eventually filling the compartment. McCaffrey, Quintiere, and Harkleroad (MQH) (1981) (also reported by Walton and Thomas, 1995 and 2002) have developed a simple statistical dimensionless correlation for evaluating fire growth in a

compartment (hot gas layer temperature) with natural ventilation. This MQH correlation is based on 100 experimental fires (from 8 series of tests involving several types of fuel) in conventional-sized rooms with openings. The temperature differences varied from $\Delta T = 20$ °C (68 °F) to 600 °C (1,112 °F). The fire source was away from walls (i.e., data was obtained from fires set in the center of the compartment). The larger the HRR$(\dot{Q})$, and the smaller the vent, the higher we expect the upper-layer gas temperature to increase. The approximate formula for the hot gas layer temperature increase, ΔT_g, above ambient $(T_g - T_a)$ is as follows:

$$\Delta T_g = 6.85\left[\frac{\dot{Q}^2}{\left(A_v\sqrt{h_v}\right)\left(A_T h_k\right)}\right]^{\frac{1}{3}} \qquad (2\text{-}1)$$

Where:

ΔT_g = upper layer gas temperature rise above ambient $(T_g - T_a)$ (K)
$\dot{Q}$ = heat release rate of the fire (kW)
A_v = total area of ventilation opening(s) (m^2)
h_v = height of ventilation opening (m)
h_k = heat transfer coefficient (kW/m^2-K)
A_T = total area of the compartment enclosing surfaces (m^2), excluding area of vent opening(s).

The above equation can be used for multiple vents by summing the values, as follows:

$$\frac{A_v\sqrt{h_v}}{\left(\sum_{i=1}^{n}\left(A_v\sqrt{h_v}\right)\right)_i}$$

where n is the number of vents, and can be used for different construction materials by summing the A_T values for the various wall, ceiling, and floor elements.

For very thin solids, or for conduction through a solid that continues for a long time, the process of conduction becomes stationary (steady-state). The heat transfer coefficient, h_k, after long heating times, can be written as follows:

$$h_k = \frac{k}{\delta} \qquad (2\text{-}2)$$

Where:

k = thermal conductivity (kW/m-K) of the interior lining
δ = thickness of the interior lining (m)

This equation is useful for steady-state applications in which the fire burns longer than the time required for the heat to be transferred through the material until it begins to be lost out the back (cold) side. This time is referred to as the thermal penetration time, t_p, which can be calculated as:

$$t_p = \left(\frac{\rho\, c_p}{k}\right)\left(\frac{\delta}{2}\right)^2 \qquad (2\text{-}3)$$

Where:

ρ = density of the interior lining (kg/m^3)
c_p = thermal capacity of the interior lining (kJ/kg-K)
k = thermal conductivity of the interior lining (kW/m-K)
δ = thickness of the interior lining (m)

However, if the burning time is less than the thermal penetration time, t_p, the boundary material retains most of the energy transferred to it and little will be lost out the non-fire (cold) side. The heat transfer coefficient, h_k, in this case, can then be estimated using the following equation for $t < t_p$:

$$h_k = \sqrt{\frac{k\rho c}{t}} \qquad (2\text{-}4)$$

Where:

$k\rho c$ = interior construction thermal inertia [(kW/m^2-K)^2-sec]
(thermal property of the material responsible for the rate of temperature increase)
t = time after ignition in seconds (characteristic burning time)

By contrast, for $t \geq t_p$, the heat transfer coefficient is estimated from Equation 2-2 as follows:

$$h_k = \frac{k}{\delta}$$

Where:

k = thermal conductivity of the interior lining (kW/m-K)
δ = thickness of the interior lining (m)

As indicated above, the $k\rho c$ parameter is a thermal property of the material responsible for the rate of temperature increase. This is the product of the material thermal conductivity (k), the material density (ρ), and the heat capacity (c). Collectively, $k\rho c$ is known as the material thermal inertia. For most materials, c does not vary significantly, and the thermal conductivity is largely a function of the material density. This means that density tends to be the most important material property. Low-density materials are excellent thermal insulators. Since heat does not pass through such materials, the surface of the material actually heats more rapidly and, as a result, can ignite more quickly. Good insulators (low-density materials), therefore, typically ignite more quickly than poor insulators (high-density materials). This is the primary reason that foamed plastics are so dangerous in fires; they heat rapidly and ignite in situations in which a poor insulator would be slower to ignite because of its slower response to the incident heat flux. The thermal response properties ($k\rho c$), for a variety of generic materials have been reported in the literature. These values have been derived from measurements in the small-scale lateral ignition and flame spread test (LIFT) apparatus (ASTM E1321). Table 2-3 lists typical thermal properties of variety of materials.

Table 2-3. Thermal Properties of Compartment Enclosing Surface Materials (Klote and Milke, 2002) (Waiting for copyright permission)				

The compartment interior surface area can be calculated as follows:

A_T = ceiling + floor $2\ (w_c \times l_c)$
+ 2 large walls $2\ (h_c \times w_c)$
+ 2 small walls $2\ (h_c \times l_c)$
- total area of vent opening(s) (A_0)

$$A_T = [2\ (w_c \times l_c) + 2\ (h_c \times w_c) + 2\ (h_c \times l_c)] - A_v \qquad (2\text{-}5)$$

Where:

A_T = total compartment interior surface area (m^2), excluding area of vent opening(s)
w_c = compartment width (m)
l_c = compartment length (m)
h_c = compartment height (m)

A_v = total area of ventilation opening(s) (m^2)

2.6.2 Natural Ventilation: Compartment Closed - Method of Beyler

Beyler (1991) (also reported by Walton and Thomas, 2002) developed a correlation based on a nonsteady energy balance to the closed compartment, by assuming that the compartment has sufficient leaks to prevent pressure buildup. For constant HRR, the compartment hot gas layer temperature increase, ΔT_g, above ambient (T_g - T_a) is given by the following equation:

$$\Delta T_g = T_g - T_a = \frac{2K_2}{K_1^2}\left(K_1\sqrt{t} - 1 + e^{-k_1\sqrt{t}}\right) \qquad (2\text{-}6)$$

Where:

$$K_1 = \frac{2\left(0.4\sqrt{k\rho c}\right)}{mc_p}$$

$$K_2 = \frac{\dot{Q}}{mc_p}$$

And:

ΔT_g = upper layer gas temperature rise above ambient (T_g - T_a) (K)
k = thermal conductivity of the interior lining (kW/m-K)
ρ = density of the interior lining (kg/m^3)
c = thermal capacity of the interior lining (kJ/kg-K)
$\dot{Q}$ = heat release rate of the fire (kW)
m = mass of the gas in the compartment (kg)
c_p = specific heat of air (kJ/kg-k)
t = exposure time (sec)

2.6.3 Forced Ventilation: Method of Foote, Pagni, and Alvares (FPA)

Foote, Pagni, and Alvares (FPA) (1985) (also reported by Walton and Thomas, 1995 and 2002) developed another method, which follows the basic correlations of the MQH method, but adds components for forced-ventilation fires. This method is based on temperature data that were obtained from a series of tests conducted at the Lawrence Livermore National Laboratory (LLNL). Fresh air was introduced at the floor and pulled out the ceiling by an axial fan. The approximate constant HRR and ventilation rates were chosen to be representative of possible fires in ventilation-controlled rooms with seven room air changes per hour.

The upper-layer gas temperature increase above ambient is given as a function of the fire HRR, the compartment ventilation flow rate, the gas-specific heat capacity, the compartment surface area, and an effective heat transfer coefficient. The nondimensional form of the resulting temperature correlation is as follows:

$$\frac{\Delta T_g}{T_a} = 0.63 \left(\frac{\dot{Q}}{\dot{m}c_p T_a}\right)^{0.72} \left(\frac{h_k A_T}{\dot{m}c_p}\right)^{-0.36} \qquad (2\text{-}7)$$

Where:

ΔT_g = hot gas layer temperature rise above ambient (T_g - T_a) (K)
T_a = ambient air temperature (K)
$\dot{Q}$ = HRR of the fire (kW)
$\dot{m}$ = compartment mass ventilation flow rate (kg/sec)
c_p = specific heat of air (kJ/kg-K)
h_k = heat transfer coefficient (kW/m^2-K)
A_T = total area of compartment enclosing surfaces (m^2)

The above correlation for forced-ventilation fires can be used for different construction materials by summing the A_T values for the various wall, ceiling, and floor elements.

2.6.4 Forced Ventilation: Method of Beyler and Deal

Deal and Beyler (1990) (also reported by Walton and Thomas, 2002) developed a simple model of forced ventilated compartment fires. The model is based on a quasi-steady simplified energy equation with a simple wall heat loss model. The approximate compartment hot gas layer temperature increase, ΔT_g, above ambient (T_g - T_a) is given by the following equation:

$$\Delta T_g = T_g - T_a = \frac{\dot{Q}}{\dot{m}c_p + h_k A_T} \qquad (2\text{-}8)$$

Where:

ΔT_g = hot gas layer temperature rise above ambient (T_g - T_a) (K)
T_a = ambient air temperature (K)
$\dot{Q}$ = HRR of the fire (kW)
$\dot{m}$ = compartment mass ventilation flow rate (kg/sec)
c_p = specific heat of air (kJ/kg-K)
h_k = convective heat transfer coefficient (kW/m^2-K)
A_T = total area of compartment enclosing surfaces (m^2)

The convective heat transfer coefficient is given by the following expression:

$$h_k = 0.4 \max\left(\sqrt{\frac{k\rho c}{t}},\ \frac{k}{\delta}\right) \qquad (2\text{-}9)$$

Where:

k = thermal conductivity of the interior lining (kW/m-K)
ρ = density of the interior lining (kg/m^3)
c = thermal capacity of the interior lining (kJ/kg-K)
t = exposure time (sec)
δ = thickness of the interior lining (m)

2.7 Estimating Smoke Layer Height

When a fire occurs in a compartment, within few seconds of ignition, early flame spread can quickly lead to a flaming, free-burning fire. If left unchecked, the fire continues to grow. Besides releasing energy, the combustion process also yields a variety of other products, including toxic and nontoxic gases and solids. Together, all of these products are generally referred to as the "smoke" produced by the fire.

As the flame spreads across the fuel surface, the fire size, which can be described as the HRR, increases. As the size increases, the radiation heat transfer from the flame to the fuel surface increases, and this increases the burning rate. If the flame has not involved the entire surface area, this increased fire size accelerates the flame spread. Above the flame zone, a buoyant plume is formed. The plume entrains ambient air, which both cools the gas and increases the flow rate. In a typical compartment, the plume strikes the ceiling and forms a ceiling jet, which in turn strikes a wall, and the compartment begins to fill with hot smoke from the ceiling downward. The plume continues to entrain ambient air, adding mass to the layer until it reaches the upper gas layer. Here, as the gas layer descends, less mass is entrained into it. Thus, the amount of gas flow from the plume is a function of the fire size and the height over which entrainment occurs.

As previously stated, the temperature and composition of gas entering the hot gas layer are driven by the fire source and the plume. Once the hot gas enters this hot layer, it cools by losing energy to surrounding surfaces (i.e., ceiling, walls) by conduction, and cools by radiating heat energy to the floor and the cool gas layer near the floor. The rate of descent of the hot gas layer is driven by the size of the compartment and the amount of mass flow from the plume. Since the plume mass flow is a function of the height beneath the gas layer, the layer descends at a progressively slower rate as it gets closer to the fire source.

The plume essentially mixes cool air with the combustion products, thereby increasing the total flow into the hot gas layer, while reducing its temperature and the concentration of gases flowing into it. The plume can only add mass to the upper layer by entrainment along the plume axis below the hot gas layer position. Once it penetrates the hot gas layer, it entrains hot gas, helping to mix the layer, but not increasing its depth.

One of the most important processes that occurs during the early stages of a compartment fire is the filling of the compartment with smoke. Although the hot layer gas temperatures are relatively low [< 200 °C (392 °F)], the composition of the smoke relative to visibility and toxicity and the vertical position of the layer are of interest. Figure 2-4 shows this process schematically.

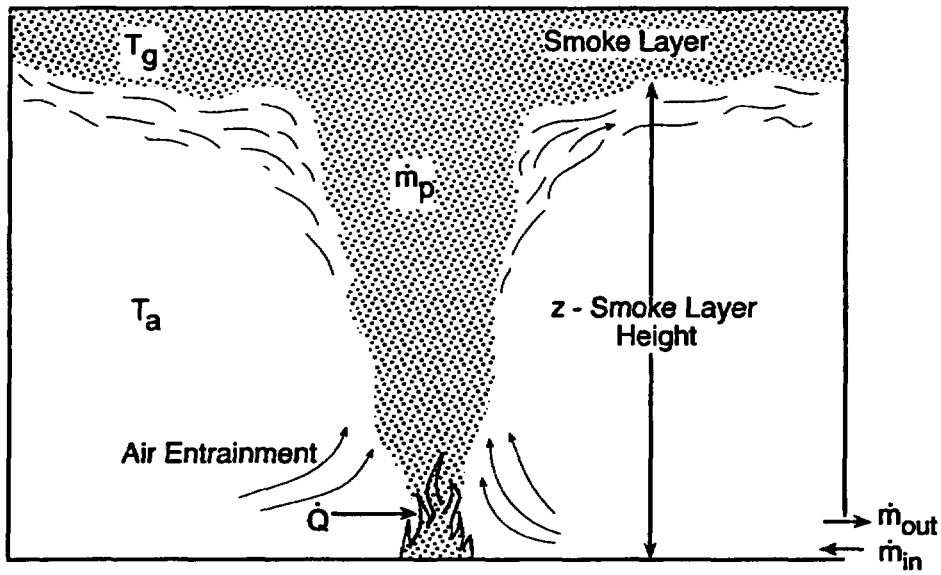

Figure 2-4 Smoke Filling in a Compartment Fire

2.7.1 Smoke Layer

The smoke layer can be described as the accumulated thickness of smoke below a physical or thermal barrier (e.g., ceiling). The smoke layer is typically not a homogeneous mixture, and it does not typically have a uniform temperature. However, for first-order approximations, the calculation methods presented below assume homogeneous conditions. The smoke layer includes a transition zone that is nonhomogeneous and separates the hot upper layer from the smoke-free air (i.e., two zones).

2.7.2 Smoke Layer Interface Position

Figure 2-5 depicts the theoretical boundary (or interface) between a smoke layer and the smoke-free air. In practice, the smoke layer interface is an effective boundary within a transition buffer zone, which can be several feet thick. Below this effective boundary, the smoke density in the transition zone decreases to zero.

2.7.3 Natural Ventilation: Smoke Filling - The Non-Steady State Yamana and Tanaks Method

In a compartment with larger openings (windows or doors), there will be little or no buildup of pressure attributed to the volumetric expansion of hot gases, with the exception of rapid accumulation of mass or energy. Thus, for the first-order approximations, pressure is assumed to remain at the ambient pressure. The opening flows are thus determined by the hydrostatic pressure differences across the openings, and mass flows out of and into the compartment. We also assume that the upper layer density (ρ_g), is some average constant value at all times throughout the smoke-filling process.

Assuming a constant average density in the upper hot gas layer has the advantage that we can form an analytical solution of the smoke-filling rate, where the HRR does not need to be constant (that is, it can be allowed to change with time), and we can use the conservation of mass to arrive at the expression for the smoke-filling rate. When this is done, the height of the smoke layer as a function of time is known, and we can use the conservation of energy to check the stipulated value of ρ_g.

Yamana and Tanaka (1985) (also reported by Karlsson and Quintiere, 1999b) developed the expression for the height of the smoke layer interface, z, in terms of time, as follows:

$$z = \left(\frac{2\ k\ \dot{Q}^{\frac{1}{3}}\ t}{3\ A_c} + \frac{1}{h_c^{\frac{2}{3}}} \right)^{-\frac{3}{2}} \qquad (2\text{-}10)$$

Where:

z = height (m) of the smoke layer interface above the floor

$\dot{Q}$ = heat release rate of the fire (kW)

t = time after ignition (sec)

A_c = compartment floor area (m^2)

h_c = compartment height (m)

And:

k = a constant given by the following equation:

$$k = \frac{0.21}{\rho_g}\left(\frac{\rho_a^2 g}{c_p T_a}\right)^{\frac{1}{3}} \qquad (2\text{-}11)$$

Where:

ρ_g = hot gas density kg/m^3
ρ_a = ambient density = 1.20 kg/m^3
g = acceleration of gravity = 9.81 m/sec^2
c_p = specific heat of air = 1.0 kJ/kg-K
T_a = ambient air temperature = 298 K.

Substituting the above numerical values in Equation 2-11, we get the following expression:

$$k = \frac{0.076}{\rho_g} \qquad (2\text{-}12)$$

Where density of the hot gas (ρ_g), layer is given by:

$$\rho_g = \frac{353}{T_g} \qquad (2\text{-}13)$$

Where:

T_g = hot gas layer temperature (K) calculated from Equation 2-1

Calculation Procedure

(1) Derive ρ_g from Equation 2-13.
(2) Calculate the constant k from Equation 2-12.
(3) Calculate the smoke layer height (z) at the some time (t) from Equation 2-10 given HRR.

2.8 Data Sources for Heat Release Rate

When an object burns, it releases a certain amount of energy per unit of time. For most materials, the HRR of a fuel changes with time, in relation to its chemistry, physical form, and availability of oxidant (air), and is ordinarily expressed as kW (kJ/sec) or Btu/sec and denoted by $\dot{Q}$ (1,000 kW = 1 MW or 1 BTU/sec = 1.055 kW).

Figure 2-5 illustrates the general features of typical HRR histories. HRR commonly demonstrates an acceleratory growth stage, which may follow an induction stage of negligible growth. Objects may or may not exhibit the period of fairly steady burning illustrated in Figure 2-5 (a); this depends on whether fuel burnout begins after the fuel surface is fully involved. Materials that do not begin to burn out before the fuel surface is fully involved (peak HRR) demonstrate the fairly steady burning period exhibited in Figure 2-5 (a) until burnout begins; materials that begin to burn out before the peak HRR is achieved are characterized by heat release curves with distinct peaks, as

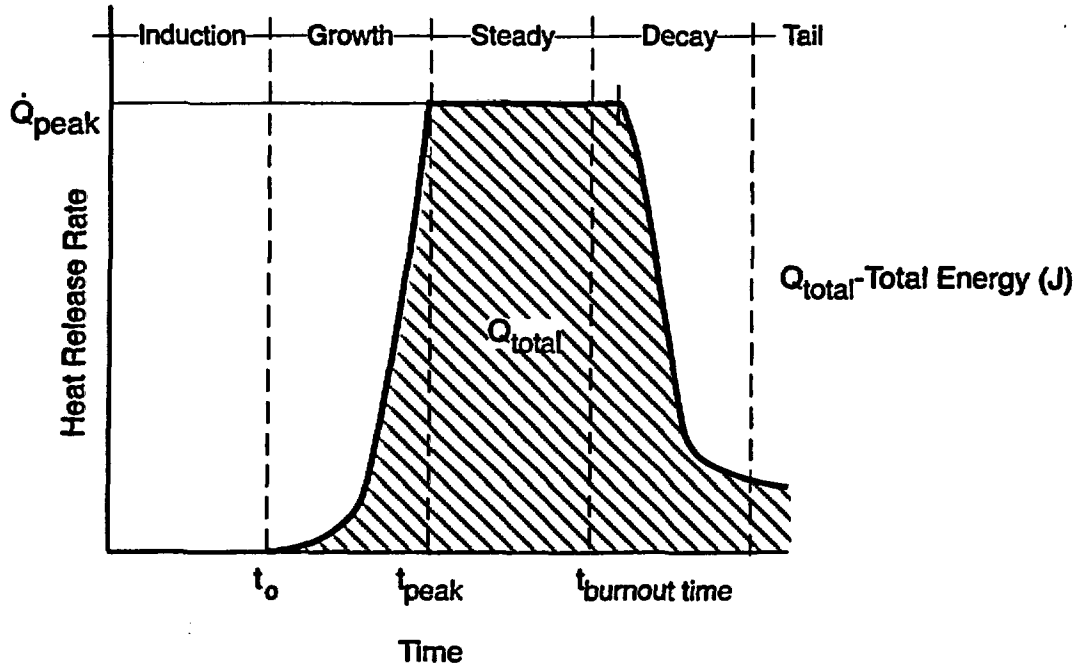

(a) Burnout Time > Time to Peak HRR

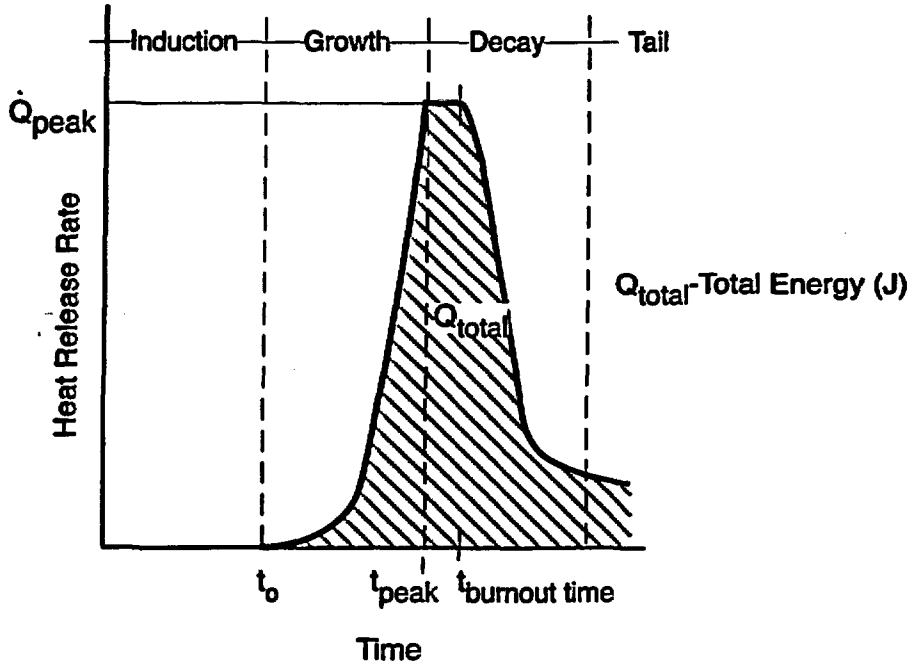

(b) Burnout Time < Time to Peak HRR

Figure 2-5 General Representation of Heat Release Rate Histories for a Fuel Package

illustrated in Figure 2-5 (b). In either case, at some time following attainment of peak HRR, a decay stage associated with fuel burnout usually occurs. This decay stage frequently gives way to a tail stage of relatively low HRR. This tail stage, which may persist for an extended time, is normally attributable to the glowing combustion that follows flaming combustion for char-forming products.

The total energy released by a material is equal to the area under the time-HRR curve. This area is influenced by the energy released during the tail stage, which may contribute a considerable portion of the total energy released, but at such a slow rate that it does not constitute the significant hazard.

2.9 Identification of Fire Scenario

The first step in an FHA is to identify which target(s) to evaluate within an enclosure or compartment. Normally, the target is a safety-related component that is being evaluated for a particular scenario. However, if exposed, intervening combustibles exist between the fire source and the safety-related component, they can become the targets for further evaluation.

Electrical cables typically serve as the primary target for most NPP analyses. The nuclear industry has defined two general types of electrical cables, referred to as IEEE-383 qualified and unqualified. These terms refer to cables that either pass or fail the IEEE-383 fire test standard, respectively. A damage threshold temperature of 370 °C (700 °F) and a critical heat flux of 10 kW/m^2 (1 Btu/ft^2-sec) have been selected for IEEE-383 qualified cable. A damage threshold temperature of 218 °C (425 °F) and a critical heat flux of 5 kW/m^2 (0.5 Btu/ft^2-sec) have been selected for IEEE-383 unqualified cable. These values are reported in several studies, including NUREG/CR-4679, Electrical Power Research Institute (EPRI), "Fire-Induced Vulnerability Evaluation (FIVE) Methodology," and the U.S. Department of Transportation study reported in "Combustibility of Electrical Wire and Cable for Rail Rapid Transient Systems," DOT-TSC-UMAT-83-4-1, May 1983.

The second step in an FHA is to identify the location of credible exposure fire sources relative to the target being evaluated. Exposure fires involving transient combustibles are assumed to have an equal probability of occurring anywhere in a space, while exposure fires involving fixed combustibles are assumed to occur at the site of the fixed combustible. Since the hazard is greater when a fire is located directly beneath a target, this placement is evaluated for scenarios involving exposure fires with transient combustibles. For fixed combustibles, the actual geometry between the source and the target is evaluated to determine whether the target is located in the fire plume region.

Representative unit HRR values for a number of fuels present in the NPP (e.g., electrical cables, electrical cabinets, flammable/combustible liquids, and transient combustibles) have been measured and reported in various reports by Lee (1985), Nowlen (1986 and 1987), Chavez (1987), and Babrauskas (1991). Flammable/combustible liquid spill fires and trash fires are the most commonly postulated transient fuel exposure fires in NPPs. Electrical cable fires and electrical cabinet fires are the most commonly postulated fixed fuel fires. Tables 2-4 through 2-10 show the HRR and other data for common fixed and transient combustible materials found in NPPs.

Table 2-4. Measured Heat Release Rate Data for Cable Jacketing Material (Lee, 1981)		
Fuel	HRR per Unit Area $\dot{Q}''$ (kW/m^2)	Heat of Combustion ΔH_c (kJ/kg)
PE/PVC (Polyethylene/Polyvinylchloride)	590	24,000
XPE/FRXPE (Crosslinked Polyethylene/Fire Retardant Crosslinked Polyethylene)	475	28,300
XPE/Neoprene	300	10,300
PE, Nylon/PVC, Nylon	230	9,200
Tefzel™ - ETFE (Ethylenetetrafluoroethylene)	100	3,200

Table 2-5. Measured Heat Release Rate Data for Electrical Cabinets (Nowlen, 1986 and 1987)	
Fuel	Peak HRR* $\dot{Q}$ (kW)
Electrical Cabinet Filled with IEEE-383 Qualified Cables (Vertical doors open)	55
Electrical Cabinet Filled with IEEE-383 Qualified Cables (Vertical doors closed)	No data
Electrical Cabinet Filled with IEEE-383 Unqualified Cables (Vertical doors open)	1,000
Electrical Cabinet Filled with IEEE-383 Unqualified Cables (Vertical doors closed, vent grills only)	185
*Note: HRR contributions in the electrical cabinet are based solely on the cable insulation material, and neglect the energy release based on the current (amperes squared multiplied by time.)	

Table 2-6. Measured Heat Release Rate Data for Transient Combustible Materials (Flammable/Combustible Liquids)	
Fuel	HRR per Unit Area $\dot{Q}''$ (kW/m^2)
Diesel oil	1,985
Gasoline	3,290
Kerosene	2,200
Transformer oil	1,795
Lube oil lubrication (used in Reactor Coolant Pump (RCP) motors and turbine)	For lubricating oil, use HRR of transformer oil. Lubricating oil has burning characteristics similar to transformer oil.

Table 2-7. Measured Heat Release Rate Data for Transient Combustible Materials (Trash) (Lee, 1985)	
Fuel	Peak HRR $\dot{Q}$ (kW)
9.1 kg computer paper crumpled up in two plastic trash bags	110
11.4 kg rags, 7.7 paper towels. 5.9 kg plastic gloves and taps, and 5.9 kg methyl alcohol, mixed in two 50-gallon trash bags	120
13.6 kg computer paper crumpled up and divided in two 7.5 kg (50 gallon) plastic trash cans	110
4.6 kg crumpled up computer paper and 31.8 kg folded computer paper, evenly divided into two bags	40

Table 2-8. Measured Heat Release Data for Transient Combustible Materials (Plywood and Wood Pallet) (Karlsson and Quintiere, 1999a) (Waiting for copyright permission)	

Table 2-9. Ignition Thresholds (Pilotless within 30 seconds) (Navel Ship's Technical Manual, S9086-S3-STM-010/CH-555, 1993)			
Material	Hot Air (Oven Effect) °C (°F)	Hot Metal Contact (Frying Pan Effect) (kW/m^2)	Radiant Heat Flux (kW/m^2)
Paper	230 (450)	250 (480)	20
Cloth	250 (480)	300 (570)	35
Wood	300 (570)	350 (660)	40
Cables	375 (700)	450 (840)	60

Table 2-10. Thermal Effects on Electronics (Navel Ship's Technical Manual, S9086-S3-STM-010/CH-555, 1993)	
Temperature °C (°F)	Effects
50 (120)	Computer develop faults
150 (300)	Permanent computer damage
250 (480)	Data transmission cable fail

2.10 Assumptions and Limitations

The methods discussed in this chapter have several assumptions and limitations.
The following assumptions and limitations apply to all forced and natural convection situations:

(1) These methods best apply to conventional-size compartments. They should be used with caution for large compartments.

(2) These methods apply to both transient and steady-state fire growth.

(3) The HRR must be known; it does not need to be constant, and can be allowed to change with time.

(4) Compartment geometry assumes that a given space can be analyzed as a rectangular space with no beam pockets. This assumption affects the smoke filling rate within a space if the space has beam pockets. For irregularly shaped compartments, equivalent compartment dimensions (length, width, and height) must be calculated and should yield slightly higher layer temperatures than would actually be expected from a fire in the given compartment.

(5) These methods predict average temperatures and do not apply to cases in which predication of local temperature is desired. For example, this method should not be used to predict detector or sprinkler actuation or the material temperatures resulting from direct flame impingement.

(6) Caution should be exercised when the compartment overhead are highly congested with obstructions such as cable trays, conduits, ducts, etc.

(7) A single heat transfer coefficient may be used for the entire inner surface of the compartment.

(8) The heat flow to and through the compartment boundaries is unidimensional (i.e., corners and edges are ignored, and the boundaries are assumed to be infinite slabs).

(9) These methods assume that heat loss occurs as a result of mass flowing out through openings. Consequently, these methods do not apply to situations in which significant time passes before hot gases begin leaving the compartment through openings. This may occur in large enclosures (e.g., turbine building), where it may take considerable time for the smoke layer to reach the height of the opening.

*The following assumptions and limitations apply only to **natural convection** situations:*

(10) The correlations hold for compartment upper layer gas temperatures up to approximately 600 °C (1,112 °F) only for naturally ventilated spaces in which a quasi-steady balance develops between the rates of mass inflow and outflow from the hot gas layer.

(11) These correlations assume that the fire is located in the center of the compartment or away from the walls. If the fire is flush with a wall or in a corner of the compartment, the MQH correlation is not valid with coefficient 6.85.

(12) The smoke layer height correlation assumes an average constant value of upper layer density throughout the smoke-filling process.

(13) At the EPRI Fire Modeling Workshop, August 26, 2002 in Seattle, Washington, Mark Salley asked Professor James G. Quintiere (one of the authors of the MQH method) what limits apply to compartment size when using the MQH equation. Professor Quintiere replied that the correlation will work for *any* size compartment since it is a dimensionless equation. Professor Quintiere also stated that $\dot{Q}$ should be limited by the following expressions:

$$\dot{m}_f \Delta H_c \leq 3000 \frac{kJ}{kg} \quad \text{or} \quad 0.5 A_v \sqrt{h_v} \leq 3000 \frac{kJ}{kg}$$

Where:

$\dot{m}_f$ = mass loss rate of fuel (kg/sec)

ΔH_c = heat of combustion (kJ/kg)
A_v = area of ventilation opening (m^2)
h_v = Height of ventilation opening (m)

*The following assumptions and limitations apply only to **forced convection** situations:*

(14) These correlations assume that the test compartment is open to the outside at the inlet, and its pressure is fixed near 1 atmosphere.

(15) These correlations do not explicitly account for evaluation of the fire source.

(16) These correlations assume that the fire is located in the center of the compartment or away from the walls. If the fire is flush with a wall or in a corner of the compartment, the FPA correlation is not valid with coefficient 0.63.

2.11 Required Input for Spreadsheet Calculations

The user must obtain the following values before attempting a calculation using the natural or forced ventilation spreadsheets:

(1) Compartment width (ft)

(2) Compartment length (ft)

(3) Compartment height (ft)

(4) Interior lining material thickness (in)

(6) Fire heat release rate, HRR (kW)

The user must obtain the following values before attempting a calculation using the natural ventilation spreadsheets:

(7) Vent width (ft)

(8) Vent height (ft)

(9) Top of vent from floor (ft)

The user must obtain the following values before attempting a calculation using the forced ventilation spreadsheets:

(10) Forced ventilation rate (cfm)

2.12 Cautions

(1) Use (Temperature_NV.xls, Temperature_Closed_Compartment.xls, Temperature_FV1.xls, and Temperature_FV2.xls) spreadsheet in the CD ROM for calculation.

(2) Make sure you are in the correct page of the spreadsheet (thick or thin lining material).

(3) Make sure to input values using correct units.

(4) Thermally thin spreadsheets are not time-dependent; they report a worst-case scenario.

2.13 Summary

Determination of hot gas layer temperatures and smoke layer height associated with compartment fires provides a means of assessing an important aspect of fire hazard, namely the likelihood of hazardous conditions when structural elements are in danger of collapsing, and the thermal feedback to fuel sources or other objects.

When doors and/or windows provide the air for the fire, natural ventilation occurs, and the MQH correlation applies to the prediction of hot gas temperature. The correlation is relatively straightforward, and it yields reasonable results when applied to most situations. Specifically, the correlation gives the temperature increase of the hot gas layer as a function of three primary variables:

(1) fire size ($\dot{Q}$, HRR)

(2) energy losses to the walls (h_k, A_T)

(3) energy loss through vents ($A_v\sqrt{h_v}$)

Forced ventilation can have a significant effect on fire growth, the temperature profile in the compartment, the spread of toxic fire gases, and the descent of the hot gas layer in a multi-room building. The magnitude of this effect, of course, depends on the HRR of the combustibles and the amount and configuration of the forced ventilation. Depending on the arrangement of the

supply and exhaust vents, forced ventilation affects the compartment's thermal environment and sensitive equipment, as it relates to the descent of the hot gas layer. For situations involving forced ventilation, the FPA correlation is applied to the prediction of hot gas temperature. Specifically the FPA correlation gives the temperature increase of the hot gas layer as a function of three primary variables:

(1) fire size ($\dot{Q}$, HRR)

(2) energy losses to the walls (h_k, A_T)

(3) energy loss through vents ($\dot{m}_f c_p T_a$)

The depth (or height) of the growing smoke layer increases with time, but it does not change once the smoke layer has reached equilibrium. Unsteady fires do not have a plateau or upper limit for the rate of heat release. In addition, unsteady fires may have a less rapid buildup of pressure. One approach is to relate the interface of a growing smoke layer for an unsteady fire to a t^2 fire profile.

2.14 References

ASTM E1321-97a, "Standard Test Method for Determining Material Ignition and Flame Spread Properties," ASTM Fire Test Standard, Fifth Edition, American Society of Testing and Materials, West Conshohocken, Pennsylvania, pp. 1061–1076. 1999.

Babrauskas, V., R.D. Peacock, E. Braun, R.W. Bukowski, and W.W. Jones, "Fire Performance of Wire and Cable: Reaction-to-Fire—Tests A Critical Review of the Existing Methods and of New Concepts," NIST Technical Note 1291, U.S. Department of Commerce, National Institute of Standards and Technology (NIST), Building and Fire Research Laboratory (BFRL), Gaithersburg, Maryland. 1991.

Beyler, C.L., "Analysis of Compartment Fires with Overhead Forced Ventilation," Fire Safety Science, Proceeding of the 3rd International Symposium, International Association of Fire Safety Science (IAFSS), Cox and Langford, Editors, Elsevier Applied Science, New York, pp. 291-300, 1991.

Chavez, J.M., "An Experimental Investigation of Internally Ignited Fires in Nuclear Power Plant Control Cabinets: Part 1: Cabinet Effects Tests," NUREG/CR-4527, Volume 1, U.S. Nuclear Regulatory Commission, Washington, DC, April 1987.

CIBSE Guide E, *Fire Engineering*, The Chartered Institution of Building Services Engineers, London, p. 9–10, February 1997.

Deal, S., and C.L. Beyler, "Correlating Preflashover Room Fire Temperatures," *SFPE Journal of Fire Protection Engineering*, Volume 2, No. 2, pp. 33–48, 1990.

Drysdale, D.D., *An Introduction to Fire Dynamics*, Chapter 9, "The Pre-Flashover Compartment Fire," 2nd Edition, John Wiley and Sons, New York, pp. 291–324, 1998.

EPRI TR-100370, "Fire-Induced Vulnerability Evaluation (FIVE)," Final Report, Electrical Power Research Institute, Palo Alto, California, April 1992.

EPRI Fire Modeling Workshop: An Introduction to Fire Modeling in Nuclear Power Plant Applications, Course Handouts and discussion with Professor J.G. Quintiere, Seattle, Washington, August 26–27, 2002.

Foote, K.L., P.J. Pagni, and N.L. Alvares, "Temperatures Correlations for Forced-Ventilated Compartment Fires," Fire Safety Science-Proceedings of the First International Symposium, International Association of Fire Safety Science (IAFSS), Grant and Pagni, Editors, Hemisphere Publishing Corporation, New York, pp. 139–148, 1985.

Karlsson, B., and J.G. Quintiere. *Enclosure Fire Dynamics*, Chapter 3, Energy Release Rates," CRC Press LLC, New York, p. 42, 1999a.

Karlsson, B., and J.G. Quintiere. *Enclosure Fire Dynamics*, Chapter 8, "Conservation Equations and Smoke Filling," CRC Press LLC, New York, p. 206, 1999b.

Klote, J.H., and J.A. Milke. *Principles of Smoke Management*, American Society of Heating, Refrigerating and Air-Conditioning Engineers, Inc., (ASHRAE), and Society of Fire Protection Engineers (SFPE), ASHRAE Special Publication, 2002.

Lee, B.T., "Heat Release Rate Characteristics of Some Combustibles Fuel Sources in Nuclear Power Plants," NBSIR 85-3195, U.S. Department of Commerce, National Bureau of Standards (NBS), Washington, DC, July 1985.

McCaffrey, B.J., J.G. Quintiere, and M.F. Harkleroad, "Estimating Room Temperature and Likelihood of Flashover Using Fire Test Data Correlation," *Fire Technology*, Volume 17, No. 2, pp. 98–119, 1981.

Navel Ship's Technical Manual, Chapter 555, "Shipboard Firefighting," Revision 1, S9086-S3-STM-010/CH-555, Commander, Naval Sea Systems Command, June 1993.

Nowlen, S.P., "Heat and Mass Release for Some Transient Fuel Sources Fires: A Test Report," NUREG/CR-4680, U.S. Nuclear Regulatory Commission, Washington, DC, October 1986.

Nowlen, S.P., "Quantitative Data on the Fire Behavior of Combustible Materials Found in Nuclear Power Plants: A Literature Review," NUREG/CR-4679, U.S. Nuclear Regulatory Commission, Washington, DC, February 1987.

Tamana, T., ,and T. Tanaks, "Smoke Control in Large Spaces, Part 1: Analytical Theories for Simple Smoke Control Problems," *Fire Science and Technology*, Volume 5, No. 1, 1985.

"The Institute of Electrical and Electronics Engineers, IEEE-383 Standard for Type Test of Class 1E Electric Cables, Field Splices, and Connection for Nuclear Power Generating Station," ANSI/IEEE Std. 383-1974, New York, 1974.

Walton, W.D., and P.H. Thomas, "Estimating Temperatures in Compartment Fires," Section 3, Chapter 3-6, *SFPE Handbook of Fire Protection Engineering*, 2nd Edition, P.J. DiNenno, Editor-in-Chief, National Fire Protection Association, Quincy, Massachusetts, 1995.

Walton, W.D., and P.H. Thomas, "Estimating Temperatures in Compartment Fires," Section 3, Chapter 6, *SFPE Handbook of Fire Protection Engineering*, 3rd Edition, P.J. DiNenno, Editor-in-Chief, National Fire Protection Association. Quincy, Massachusetts, 2002.

2.15 Additional Readings

Cote, A., and P. Bugbee, *Principle of Fire Protection*, 2nd Edition National Fire Protection Association, Quincy, Massachusetts, 1988.

Friedman, R., *Principles of Fire Protection Chemistry and Physics*, 3rd Edition, National Fire Protection Association, Quincy, Massachusetts, 1998.

Fire Dynamics Course Guide, Federal Emergency Management Agency (FEMA), United States Fire Administration (USFA), National Emergency Training Center, Emmitsburg, Maryland, 1995.

Quintiere, J.G. *Principles of Fire Behavior* Chapter 9, "Compartment Fires,", Delmar Publishers, Albany, New York, pp. 169–195, 1997.

2.15 Problems

2.15.1 Natural Ventilation

Example Problem 2.15.1-1

Problem Statement
Consider a compartment that is 15 ft wide x 15 ft long x 10 ft high (w_c x l_c x h_c), with a simple vent that is 4 ft wide x 6 ft high (w_v x h_v). The fire is constant with an HRR of 500 kW. Compute the hot gas layer temperature in the compartment and smoke layer height at 2 minutes assuming that the compartment interior boundary material is (a) 1 ft thick concrete and (b) 1.0 inch thick gypsum board. Assume that the top of the vent is 6 ft.

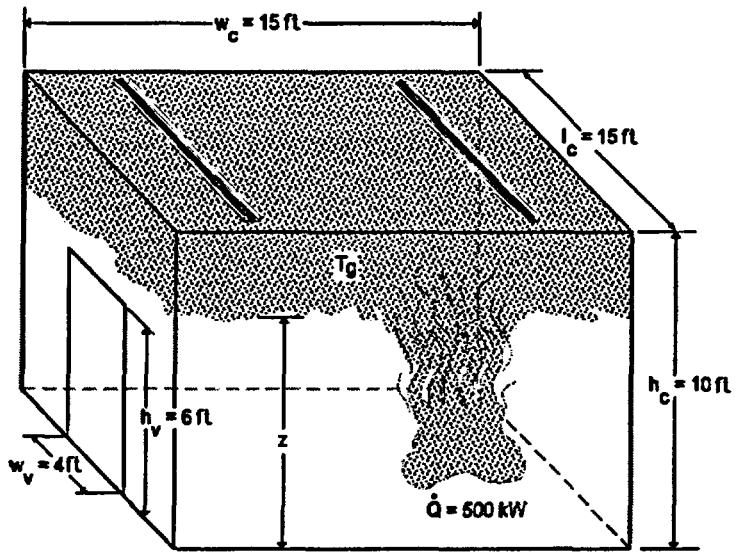

Example Problem 2-1: Compartment with Natural Ventilation

Solution

Purpose:

For two different interior boundary materials determine following:

(1) The hot gas layer temperature in the compartment (T_g) at t = 2 min after ignition

(2) The smoke layer height (z) at t = 2 min after ignition

Assumptions:

(1) Air properties (ambient) at 77 °F (25 °C)

(2) Simple rectangular geometry (no beam pockets)

(3) One-dimensional heat flow through the compartment boundaries

(4) Constant heat release rate (HRR).

(5) The fire is located at the center of the compartment or away from the walls

Spreadsheet (FDT^s) Information:

Use the following FDT^s:

(a) For concrete: Temperature_NV.xls (click on *Temperature_ NV Thermally Thick*)

(b) For gypsum board: Temperature_NV.xls (click on *Temperature_ NV Thermally Thin*)
Note: Since concrete thickness is greater than one inch, it is necessary to use the correlations for thermally thick material. However, since the gypsum board thickness is equal to 1 inch, it is necessary to use correlations for thermally thin material.

FDT[s] Input Parameters: (for both spreadsheets)

- Compartment Width (w_c) = 15 ft
- Compartment Length (l_c) = 15 ft
- Compartment Height (h_c) = 10 ft
- Vent Width (w_v) = 4 ft
- Vent Height (h_v) = 6 ft
- Top of Vent from Floor (V_T) = 6 ft
- Interior Lining Thickness (δ) = 12 in.(concrete) and 1 in. (gypsum board)
- Material: Select **Concrete** and **Gypsum Board** on the respective FDT[s]
- Fire Heat Release Rate $(\dot{Q})$ = 500 kW
- Time after ignition (t) = 2 min (for sheet *Temperature_ NV Thermally Thin* only)

Results*

Interior Boundary Material	Hot Gas Layer Temperature (T_g) °C (°F) (Method of MQH)	Smoke Layer Height (z) z m (ft) (Method of Yamana and Tanaka)
Concrete	147 (296)	0.40 (1.31) (smoke exiting vent, $z < V_T$)
Gypsum Board	372 (702)	0.10 (0.32) (compartment filled with smoke

*see spreadsheet on next page at t = 2 min

Spreadsheet Calculations

Boundary Material: Concrete

CHAPTER 2 - METHOD OF PREDICTING HOT GAS LAYER TEMPERATURE AND SMOKE LAYER HEIGHT IN ROOM FIRE WITH NATURAL VENTILATION COMPARTMENT WITH THERMALLY THICK BOUNDARIES

The following calculations estimate the hot gas layer temperature and smoke layer height in enclosure fire.
Parameters should be specified ONLY IN THE YELLOW INPUT PARAMETER BOXES.
All subsequent output values are calculated by the spreadsheet and based on values specified in the input parameters. This spreadsheet is protected and secure to avoid errors due to a wrong entry in a cell(s).
The chapter in the guide should be read before an analysis is made.

INPUT PARAMETERS

COMPARTMENT INFORMATION

Compartment Width (w_c)	15.00	ft	4.572 m
Compartment Length (l_c)	15.00	ft	4.572 m
Compartment Height (h_c)	10.00	ft	3.048 m
Vent Width (w_v)	4.00	ft	1.219 m
Vent Height (h_v)	6.00	ft	1.829 m
Top of Vent from Floor (V_T)	6.00	ft	1.829 m
Interior Lining Thickness (δ)	12.00	in	0.3048 m

For thermally thick case the interior lining thickness should be greater than 1 inch.

AMBIENT CONDITIONS

Ambient Air Temperature (T_a)	77.00	°F	25.00 °C 298.00 K
Specific Heat of Air (c_p)	1.00	kJ/kg-K	
Ambient air Density (ρ_a)	1.20	kg/m³	

THERMAL PROPERTIES OF COMPARTMENT ENCLOSING SURFACES FOR

Interior Lining Thermal Inertia (kpc)	2.9	(kW/m²-K)²-sec
Interior Lining Thermal Conductivity (k)	0.0016	kW/m-K
Interior Lining Specific Heat (c)	0.75	kJ/kg-K
Interior Lining Density (ρ)	2400	kg/m³

INTERIOR LINING EXPERIMENTAL THERMAL PROPERTIES FOR COMMON MATERIALS

Select Material: Concrete

Scroll to desired material then Click the selection

Material	kpc (kW/m²-K)²-sec	k (kW/m-K)	c (kJ/kg-K)	ρ (kg/m³)
Aluminum (pure)	500	0.206	0.895	2710
Steel (0.5% Carbon)	197	0.054	0.465	7850
Concrete	2.9	0.0016	0.75	2400
Brick	1.7	0.0008	0.8	2600
Glass, Plate	1.6	0.00076	0.8	2710
Brick/Concrete Block	1.2	0.00073	0.84	1900
Gypsum Board	0.18	0.00017	1.1	960
Plywood	0.16	0.00012	2.5	540
Fiber Insulation Board	0.16	0.00053	1.25	240
Chipboard	0.15	0.00015	1.25	800
Aerated Concrete	0.12	0.00026	0.96	500
Plasterboard	0.12	0.00016	0.84	950
Calcium Silicate Board	0.098	0.00013	1.12	700
Alumina Silicate Block	0.036	0.00014	1	260
Glass Fiber Insulation	0.0018	0.000037	0.8	60
Expanded Polystyrene	0.001	0.000034	1.5	20

Reference: Klote, J., J. Milke, *Principles of Smoke Management*, 2002, Page 270.

FIRE SPECIFICATIONS

Fire Heat Release Rate (Q)	500.00	kW

METHOD OF McCAFFREY, QUINTIERE, AND HARKLEROAD (MQH)

Reference: SFPE Handbook of Fire Protection Engineering, 2nd Edition, Page 3-139

$\Delta T_g = 6.85[Q^2/(A_v(h_v)^{1/2})(A_T h_k)]^{1/3}$

Where $\Delta T_g = T_g - T_a$ = upper layer gas temperature rise above ambient (K)
Q = heat release rate of the fire (kW)
A_v = area of ventilation opening (m^2)
h_v = height of ventilation opening (m)
h_k = convective heat transfer coefficient (kW/m^2-K)
A_T = total area of the compartment enclosing surface boundaries excluding area of vent openings (m^2)

Area of Ventilation Opening Calculation

$A_v = (w_v)(h_v)$

$A_v =$ 2.23 m^2

Thermal Penetration Time Calculation **Thermally Thick Material**

$t_p = (\rho c_p/k)(\delta/2)^2$

Where ρ = interior construction density (kg/m^3)
c_p = interior construction heat capacity (kJ/Kg-K)
k = interior construction thermal conductivity (kW/m-K)
δ = interior construction thickness (m)

$t_p =$ 26128.98 sec

Heat Transfer Coefficient Calculation

$h_k = v(k\rho c/t)$ for $t < t_p$

Where $k\rho c$ = interior construction thermal inertia (kW/m^2-K)^2-sec
(a thermal property of material responsible for the rate of temperature rise)
t = time after ignition (sec)

Area of Compartment Enclosing Surface Boundaries

$A_T = [2(w_c x l_c) + 2(h_c x w_c) + 2(h_c x l_c)] - A_v$

$A_T =$ 95.32 m^2

Compartment Hot Gas Layer Temperature With Natural Ventilation

$\Delta T_g = 6.85[Q^2/(A_v(h_v)^{1/2})(A_T h_k)]^{1/3}$

$\Delta T_g = T_g - T_a$

$T_g = \Delta T_g + T_a$

RESULTS

Time after Ignition (t)		h_k	ΔT_g	T_g	T_g	T_g
(min)	(s)	(kW/m^2-K)	(K)	(K)	(°C)	(°F)
0	0.00	-	-	298.00	25.00	77.00
1	60	0.22	108.34	406.34	133.34	272.02
2	120	0.16	121.61	419.61	146.61	295.90
3	180	0.13	130.11	428.11	155.11	311.20
4	240	0.11	136.50	434.50	161.50	322.70
5	300	0.10	141.67	439.67	166.67	332.01
10	600	0.07	159.02	457.02	184.02	363.24
15	900	0.06	170.14	468.14	195.14	383.26
20	1200	0.05	178.50	476.50	203.50	398.30

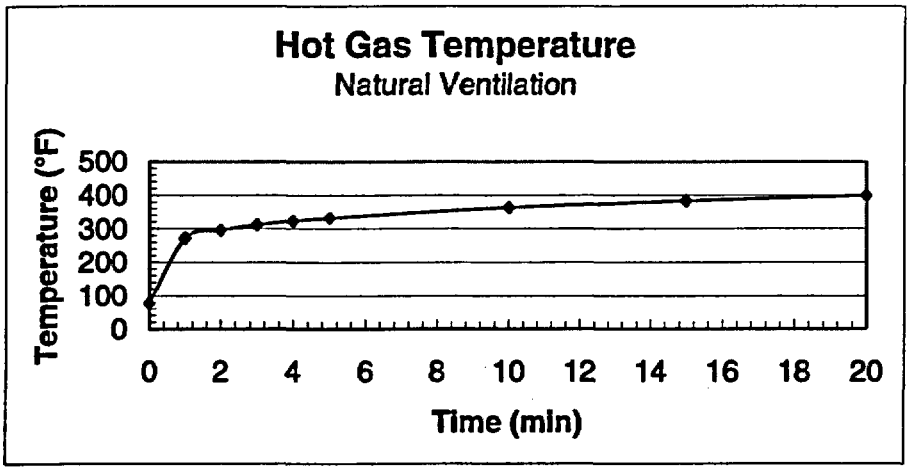

ESTIMATING SMOKE LAYER HEIGHT METHOD OF YAMANA AND TANAKA

$z = ((2kQ^{1/3}t/3A_c) + (1/h_c^{2/3})^{-3/2}$

Where z = smoke layer height (m)
Q = heat release rate of the fire (kW)
t = time after ignition (sec)
h_c = compartment height (m)
A_c = compartment floor area (m^2)
k = a constant given by $k = 0.076/\rho_g$
ρ_g = hot gas layer density (kg/m^3)
ρ_g is given by $\rho_g = 353/T_g$
T_g = hot gas layer temperature (K)

Compartment Area Calculation

$A_c =$ $(w_c)(l_c)$

$A_c =$ 20.90 m^2

Hot Gas Layer Density Calculation

$\rho_g =$ $353/T_g$

Calculation for Constant K

$k =$ $0.076/\rho_g$

Smoke Gas Layer Height With Natural Ventilation

$z =$ $((2kQ^{1/3}t/3A_c) + (1/h_c^{2/3})^{-3/2}$

RESULTS

Time (min)	ρ_g kg/m^3	k	z (m)	z (ft)
0	1.20	0.063	3.05	10.00
1	0.87	0.087	0.41	1.35
2	0.84	0.090	0.40	1.31
3	0.82	0.092	0.39	1.28
4	0.81	0.094	0.38	1.26
5	0.80	0.095	0.38	1.24
10	0.77	0.098	0.36	1.19
15	0.75	0.101	0.35	1.15
20	0.74	0.103	0.34	1.13

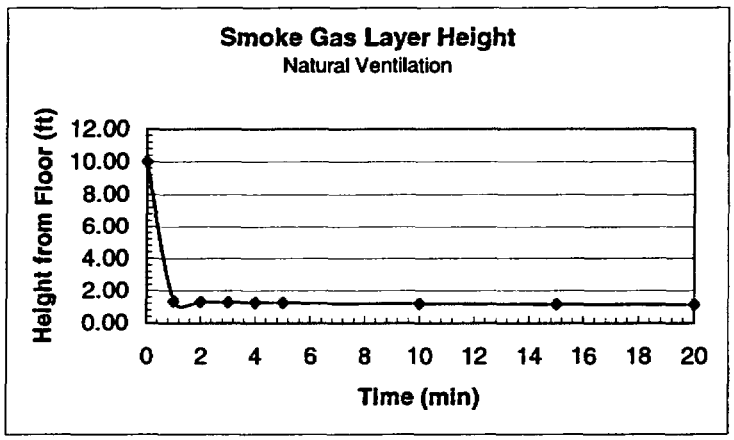

NOTE

The above calculations are based on principles developed in the SFPE Handbook of Fire Protection Engineering, 2nd Edition, 1995.

Calculations are based on certain assumptions and have inherent limitations. The results of such calculations may or may not have reasonable predictive capabilities for a given situation, and should only be interpreted by an informed user.

Although each calculation in the spreadsheet has been verified with the results of hand calculation, there is no absolute guarantee of the accuracy of these calculations.

Any questions, comments, concerns, and suggestions, or to report an error(s) in the spreadsheet, please send an email to nxi@nrc.gov.

NRR

Office of Nuclear Reactor Regulation

Boundary Material: Gypsum Board

CHAPTER 2 - METHOD OF PREDICTING HOT GAS LAYER TEMPERATURE AND SMOKE LAYER HEIGHT IN ROOM FIRE WITH NATURAL VENTILATION COMPARTMENT WITH THERMALLY THIN BOUNDARIES

The following calculations estimate the hot gas layer temperature and smoke layer height in enclosure fire.
Parameters should be specified ONLY IN THE YELLOW INPUT PARAMETER BOXES.
All subsequent output values are calculated by the spreadsheet and based on values specified in the input parameters. This spreadsheet is protected and secure to avoid errors due to a wrong entry in a cell(s).
The chapter in the guide should be read before an analysis is made.

INPUT PARAMETERS

COMPARTMENT INFORMATION

Compartment Width (w_c)	15.00	ft	4.572 m
Compartment Length (l_c)	15.00	ft	4.572 m
Compartment Height (h_c)	10.00	ft	3.048 m
Vent Width (w_v)	4.00	ft	1.219 m
Vent Height (h_v)	6.00	ft	1.829 m
Top of Vent from Floor (V_T)	6.00	ft	1.829 m
Interior Lining Thickness (δ)	1.00	in	0.0254 m

For thermally thin case the interior lining thickness should be less than or equal to 1 inch.

AMBIENT CONDITIONS

Ambient Air Temperature (T_a)	77.00	°F	25.00 °C 298.00 K
Specific Heat of Air (c_p)	1.00	kJ/kg-K	
Ambient air Density (ρ_a)	1.20	kg/m³	

THERMAL PROPERTIES OF COMPARTMENT ENCLOSING SURFACES

Interior Lining Thermal Inertia (kpc)	0.18	(kW/m²-K)²-sec
Interior Lining Thermal Conductivity (k)	0.00017	kW/m-K
Interior Lining Specific Heat (c)	1.1	kJ/kg-K
Interior Lining Density (ρ)	960	kg/m³

INTERIOR LINING EXPERIMENTAL THERMAL PROPERTIES FOR COMMON MATERIALS

Material	kpc (kW/m²-K)²-sec	k (kW/m-K)	c (kJ/kg-K)	ρ (kg/m³)
Aluminum (pure)	500	0.206	0.895	2710
Steel (0.5% Carbon)	197	0.054	0.465	7850
Concrete	2.9	0.0016	0.75	2400
Brick	1.7	0.0008	0.8	2600
Glass, Plate	1.6	0.00076	0.8	2710
Brick/Concrete Block	1.2	0.00073	0.84	1900
Gypsum Board	0.18	0.00017	1.1	960
Plywood	0.16	0.00012	2.5	540
Fiber Insulation Board	0.16	0.00053	1.25	240
Chipboard	0.15	0.00015	1.25	800
Aerated Concrete	0.12	0.00026	0.96	500
Plasterboard	0.12	0.00016	0.84	950
Calcium Silicate Board	0.098	0.00013	1.12	700
Alumina Silicate Block	0.036	0.00014	1	260
Glass Fiber Insulation	0.0018	0.000037	0.8	60
Expanded Polystyrene	0.001	0.000034	1.5	20

Select Material
Gypsum Board

Scroll to desired material then Click on selection

Reference: Klote, J., J. Milke, *Principles of Smoke Management*, 2002, Page 270.

FIRE SPECIFICATIONS

Fire Heat Release Rate (Q)	500.00 kW	
Time after ignition (t)	2.00 min.	120 sec

METHOD OF McCAFFREY, QUINTIERE, AND HARKLEROAD (MQH)

Reference: *SFPE Handbook of Fire Protection Engineering*, 2nd Edition, 1995, Page 3-139.

$\Delta T_g = 6.85[Q^2/(A_v(h_v)^{1/2})(A_T h_k)]^{1/3}$

Where $\Delta T_g = T_g - T_a$ = upper layer gas temperature rise above ambient (K)
Q = heat release rate of the fire (kW)
A_v = area of ventilation opening (m^2)
h_v = height of ventilation opening (m)
h_k = convective heat transfer coefficient (kW/m^2-K)
A_T = total area of the compartment enclosing surface boundaries excluding area of vent openings (m^2)

Area of Ventilation Opening Calculation

$A_v = (w_v)(h_v)$

$A_v =$ **2.23** m^2

Thermal Penetration Time Calculation **Thermally Thin Material**

$t_p = (\rho c_p/k)(\delta/2)^2$

Where ρ = interior construction density (kg/m^3)
c_p = interior construction heat capacity (kJ/Kg-K)
k = interior construction thermal conductivity (kW/m-K)
δ = interior construction thickness (m)

$t_p =$ **1001.90** sec

Heat Transfer Coefficient Calculation

$h_k = k/\delta$ for $t > t_p$

Where k = interior construction thermal conductivity (kW/m-K)
δ = interior construction thickness (m)

$h_k =$ **0.00669** kW/m^2-K

Area of Compartment Enclosing Surface Boundaries

$A_T = [2(w_c x l_c) + 2(h_c x w_c) + 2(h_c x l c)] - A_v$

$A_T =$ **95.32** m^2

Compartment Hot Gas Layer Temperature With Natural Ventilation

$\Delta T_g = 6.85[Q^2/(A_v(h_v)^{1/2})(A_T h_k)]^{1/3}$

$\Delta T_g =$ **346.98** K

$\Delta T_g = T_g - T_v$

$T_g = \Delta T_g + T_v$

$T_g =$ **644.98** K

T_g = 371.98 °C 701.56 °F ANSWER

ESTIMATING SMOKE LAYER HEIGHT
METHOD OF YAMANA AND TANAKA

$z = ((2kQ^{1/3}t/3A_c) + (1/h_c^{2/3})^{-3/2}$

Where
- z = smoke layer height (m)
- Q = heat release rate of the fire (kW)
- t = time after ignition (sec)
- h_c = compartment height (m)
- A_c = compartment floor area (m^2)
- k = a constant given by $k = 0.076/\rho_g$
- ρ_g = hot gas layer density (kg/m^3)
- ρ_g is given by $\rho_g = 353/T_g$
- T_g = hot gas layer temperature (K)

Compartment Area Calculation

$A_c =$ $(w_c)(l_c)$

$A_c =$ 20.90 m^2

Hot Gas Layer Density Calculation

$\rho_g =$ $353/T_g$

$\rho_g =$ 0.55 kg/m^3

Calculation for Constant K

$k =$ $0.076/\rho_g$

$k =$ 0.14

Smoke Gas Layer Height With Natural Ventilation

$z =$ $((2kQ^{1/3}t/3A_c) + (1/h_c^{2/3})^{-3/2}$ **STOP - IF Z = VT, SMOKE EXITING VENT**

z = 0.10 m 0.32 ft ANSWER

If # REF! is given as the smoke layer height then the smoke has completely filled the room

NOTE

The above calculations are based on principles developed in the SFPE Handbook of Fire Protection Engineering, 2nd Edition, 1995.
Calculations are based on certain assumptions and have inherent limitations. The results of such calculations may or may not have reasonable predictive capabilities for a given situation, and should only be interpreted by an informed user.
Although each calculation in the spreadsheet has been verified with the results of hand calculation, there is no absolute guarantee of the accuracy of these calculations.
Any questions, comments, concerns, and suggestions, or to report an error(s) in the spreadsheet, please send an email to nxi@nrc.gov.

NRR

Office of Nuclear Reactor Regulation

This page intentionally left blank.

Example Problem 2.15.1-2

Problem Statement

Consider a compartment that is 12 ft wide x 10 ft long x 8 ft high (w_c x l_c x h_c) with a simple vent 3 ft wide x 4 ft high (w_v x h_v). The construction is essentially 0.5 ft thick gypsum board. The fire is constant with an HRR of 300 kW. Assume that the top of the vent is 4 ft. Compute the hot gas temperature in the compartment, as well as the smoke layer height at 2 minutes.

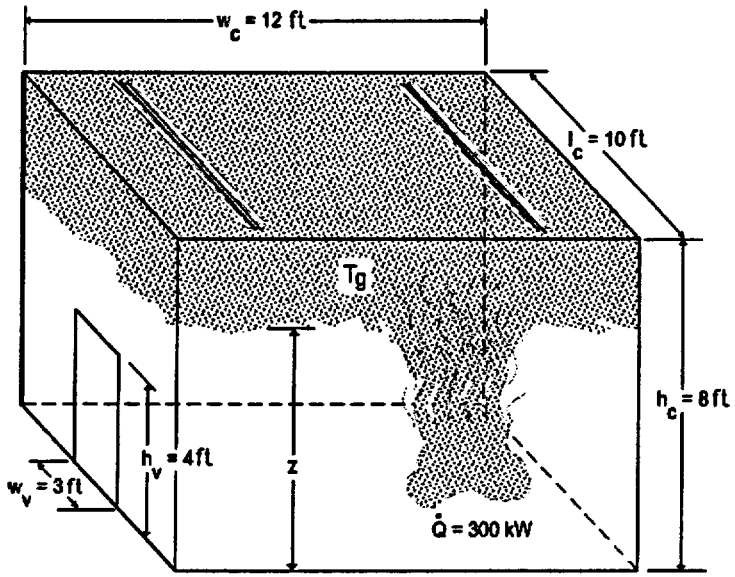

Example Problem 2-2: Compartment with Natural Ventilation

Solution

Purpose:

(1) The hot gas layer temperature in the compartment (T_g) at t = 2 min after ignition

(2) The smoke layer height (z) at t = 2 min after ignition

Assumptions:

(1) Air properties (ambient) at 77 °F (25 °C)

(2) Simple rectangular geometry (no beam pockets)

(3) One-dimensional heat flow through the compartment boundaries

(4) Constant Heat Release Rate (HRR)

(5) The fire is located at the center of the compartment or away from the walls

Spreadsheet (FDT^s) Information:

Use the following FDT^s:

(a) Temperature_NV.xls (click on *Temperature_ NV Thermally Thick*)

Note: Since the gypsum board is greater than 1 inch, it is necessary to use the correlations for thermally thick material.

FDT^s Input Parameters:

- Compartment Width (w_c) = 12 ft
- Compartment Length (l_c) = 10 ft
- Compartment Height (h_c) = 8 ft
- Vent Width (w_v) = 3 ft

- Vent Height (h_v) = 4 ft
- Top of Vent from Floor (V_T) = 4 ft
- Interior Lining Thickness (δ) = 6 in
- Material: Select **Gypsum Board** on the FDT[s]
- Fire Heat Release Rate ($\dot{Q}$) = 300 kW

Results*

Hot Gas Layer Temperature (T_g) °C (°F) (Method of MQH)	Smoke Layer Height (z) m (ft) (Method of Yamana and Tanaka)
249 (480)	0.18 (0.56) (smoke exiting vent, $z < V_T$)

*see attached spreadsheet on next page at t = 2 min

Spreadsheet Calculations

CHAPTER 2 - METHOD OF PREDICTING HOT GAS LAYER TEMPERATURE AND SMOKE LAYER HEIGHT IN ROOM FIRE WITH NATURAL VENTILATION COMPARTMENT WITH THERMALLY THICK BOUNDARIES

The following calculations estimate the hot gas layer temperature and smoke layer height in enclosure fire.
Parameters should be specified ONLY IN THE YELLOW INPUT PARAMETER BOXES.
All subsequent output values are calculated by the spreadsheet and based on values specified in the input parameters. This spreadsheet is protected and secure to avoid errors due to a wrong entry in a cell(s).
The chapter in the guide should be read before an analysis is made.

INPUT PARAMETERS

COMPARTMENT INFORMATION

Compartment Width (w_c)	12.00	ft	3.6576 m
Compartment Length (l_c)	10.00	ft	3.048 m
Compartment Height (h_c)	8.00	ft	2.4384 m
Vent Width (w_v)	3.00	ft	0.914 m
Vent Height (h_v)	4.00	ft	1.219 m
Top of Vent from Floor (V_T)	4.00	ft	1.219 m
Interior Lining Thickness (δ)	6.00	in	0.1524 m

For thermally thick case the interior lining thickness should be greater than 1 inch.

AMBIENT CONDITIONS

Ambient Air Temperature (T_a)	77.00	°F	25.00 °C 298.00 K
Specific Heat of Air (c_p)	1.00	kJ/kg-K	
Ambient air Density (ρ_a)	1.20	kg/m³	

THERMAL PROPERTIES OF COMPARTMENT ENCLOSING SURFACES FOR

Interior Lining Thermal Inertia ($k\rho c$)	0.18	$(kW/m^2\text{-}K)^2\text{-sec}$
Interior Lining Thermal Conductivity (k)	0.00017	kW/m-K
Interior Lining Specific Heat (c)	1.1	kJ/kg-K
Interior Lining Density (ρ)	960	kg/m³

INTERIOR LINING EXPERIMENTAL THERMAL PROPERTIES FOR COMMON MATERIALS

Material	$k\rho c$ $(kW/m^2\text{-}K)^2\text{-sec}$	k (kW/m-K)	c (kJ/kg-K)	ρ (kg/m³)
Aluminum (pure)	500	0.206	0.895	2710
Steel (0.5% Carbon)	197	0.054	0.465	7850
Concrete	2.9	0.0016	0.75	2400
Brick	1.7	0.0008	0.8	2600
Glass, Plate	1.6	0.00076	0.8	2710
Brick/Concrete Block	1.2	0.00073	0.84	1900
Gypsum Board	0.18	0.00017	1.1	960
Plywood	0.16	0.00012	2.5	540
Fiber Insulation Board	0.16	0.00053	1.25	240
Chipboard	0.15	0.00015	1.25	800
Aerated Concrete	0.12	0.00026	0.96	500
Plasterboard	0.12	0.00016	0.84	950
Calcium Silicate Board	0.098	0.00013	1.12	700
Alumina Silicate Block	0.036	0.00014	1	260
Glass Fiber Insulation	0.0018	0.000037	0.8	60
Expanded Polystyrene	0.001	0.000034	1.5	20

Select Material
Gypsum Board

Scroll to desired material then Click the selection

Reference: Klote, J., J. Milke, *Principles of Smoke Management*, 2002, Page 270.

FIRE SPECIFICATIONS

Fire Heat Release Rate (Q) 300.00 kW

METHOD OF McCAFFREY, QUINTIERE, AND HARKLEROAD (MQH)

Reference: *SFPE Handbook of Fire Protection Engineering*, 2nd Edition, Page 3-139.

$\Delta T_g = 6.85[Q^2/(A_v(h_v)^{1/2})(A_T h_k)]^{1/3}$

Where $\Delta T_g = T_g - T_a$ = upper layer gas temperature rise above ambient (K)
Q = heat release rate of the fire (kW)
A_v = *area of ventilation opening* (m^2)
h_v = height of ventilation opening (m)
h_k = convective heat transfer coefficient (kW/m^2-K)
A_T = total area of the compartment enclosing surface boundaries excluding area of vent openings (m^2)

Area of Ventilation Opening Calculation

$A_v = (w_v)(h_v)$

$A_v =$ 1.11 m^2

Thermal Penetration Time Calculation ***Thermally Thick Material***

$t_p = (\rho c_p/k)(\delta/2)^2$

Where ρ = interior construction density (kg/m^3)
c_p = *interior construction heat capacity* (kJ/Kg-K)
k = interior construction thermal conductivity (kW/m-K)
δ = interior construction thickness (m)

$t_p =$ 36068.239 sec

Heat Transfer Coefficient Calculation

$h_k = v(k\rho c/t)$ for $t < t_p$

Where $k\rho c$ = interior construction thermal inertia (kW/m^2-K)^2-sec
(a thermal property of material responsible for the rate of temperature rise)
t = time after ignition (sec)

Area of Compartment Enclosing Surface Boundaries

$A_T = [2(w_c x l_c) + 2(h_c x w_c) + 2(h_c x l c)] - A_v$

$A_T =$ 53.88 m^2

Compartment Hot Gas Layer Temperature With Natural Ventilation

$\Delta T_g = 6.85[Q^2/(A_v(h_v)^{1/2})(A_T h_k)]^{1/3}$

$\Delta T_g = T_g - T_a$

$T_g = \Delta T_g + T_a$

RESULTS

Time after Ignition (t)		h_k	ΔT_g	T_g	T_g	T_g
(min)	(s)	(kW/m^2-K)	(K)	(K)	(°C)	(°F)
0	0.00	-	-	298.00	25.00	77.00
1	60	0.05	199.69	497.69	224.69	436.44
2	120	0.04	224.14	522.14	249.14	480.45
3	180	0.03	239.81	537.81	264.81	508.66
4	240	0.03	251.59	549.59	276.59	529.86
5	300	0.02	261.12	559.12	286.12	547.02
10	600	0.02	293.10	591.10	318.10	604.58
15	900	0.01	313.59	611.59	338.59	641.46
20	1200	0.01	328.99	626.99	353.99	669.19

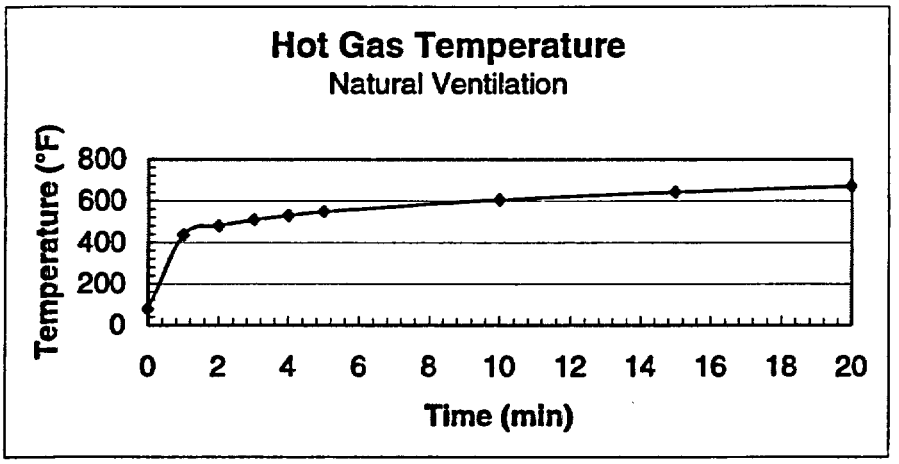

ESTIMATING SMOKE LAYER HEIGHT METHOD OF YAMANA AND TANAKA

$z = ((2kQ^{1/3}t/3A_c) + (1/h_c^{2/3})^{-3/2}$

Where
- z = smoke layer height (m)
- Q = heat release rate of the fire (kW)
- t = time after ignition (sec)
- h_c = compartment height (m)
- A_c = compartment floor area (m^2)
- k = a constant given by $k = 0.076/\rho_g$
- ρ_g = hot gas layer density (kg/m^3)
- ρ_g is given by $\rho_g = 353/T_g$
- T_g = hot gas layer temperature (K)

Compartment Area Calculation

$A_c = (w_c)(l_c)$

$A_c = 11.15\ m^2$

Hot Gas Layer Density Calculation

$\rho_g = 353/T_g$

Calculation for Constant K

$k = 0.076/\rho_g$

Smoke Gas Layer Height With Natural Ventilation

$z = ((2kQ^{1/3}t/3A_c) + (1/h_c^{2/3})^{-3/2}$

RESULTS

Time (min)	ρ_g kg/m^3	k	z (m)	z (ft)
0	1.20	0.063	2.44	8.00
1	0.71	0.107	0.18	0.59
2	0.68	0.112	0.17	0.56
3	0.66	0.116	0.16	0.54
4	0.64	0.118	0.16	0.52
5	0.63	0.120	0.16	0.51
10	0.60	0.127	0.15	0.48
15	0.58	0.132	0.14	0.46
20	0.56	0.135	0.14	0.44

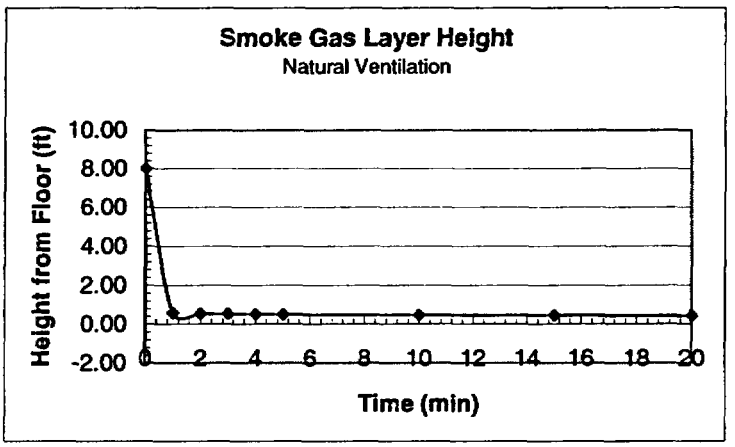

NOTE

The above calculations are based on principles developed in the SFPE Handbook of Fire Protection Engineering, 2nd Edition, 1995.

Calculations are based on certain assumptions and have inherent limitations. The results of such calculations may or may not have reasonable predictive capabilities for a given situation, and should only be interpreted by an informed user.

Although each calculation in the spreadsheet has been verified with the results of hand calculation, there is no absolute guarantee of the accuracy of these calculations.

Any questions, comments, concerns, and suggestions, or to report an error(s) in the spreadsheet, please send an email to nxi@nrc.gov.

NRR

Office of Nuclear Reactor Regulation

Example Problem 2.15.1-3

Problem Statement

Consider a compartment that is 8 ft wide x 8 ft long x 6 ft high (w_c x l_c x h_c) with a simple vent that is 2 ft wide x 3 ft high (w_v x h_v). The construction is essentially 0.75 ft thick concrete. The fire is constant with an HRR of 1,000 kW. Assume that the top of the vent is 3 ft. Compute the hot gas temperature in the compartment, as well as the smoke layer height at 3 minutes.

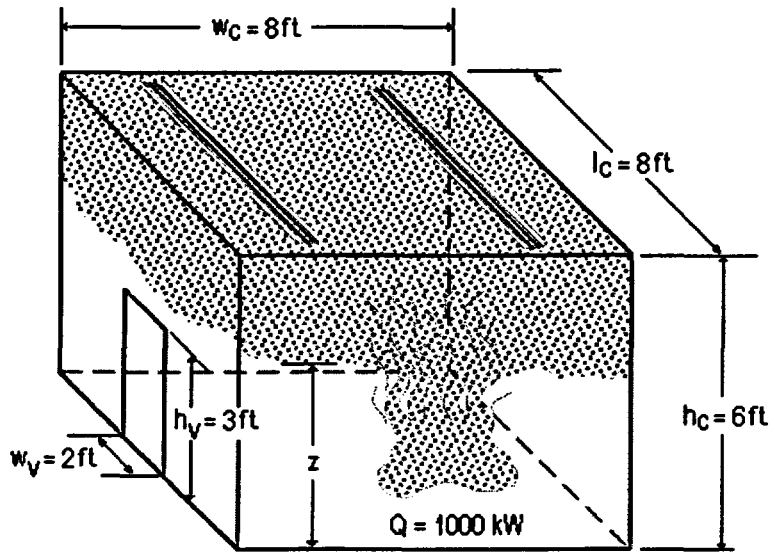

Example Problem 2-3: compartment with Natural Ventilation

Solution

Purpose:

(1) Determine the hot gas layer temperature in the compartment (T_g) at t = 3 min after ignition

(2) Determine the smoke layer height (z) at t = 3 min after ignition

Assumptions:

(1) Air properties (ambient) at 77 °F (25 °C)

(2) Simple rectangular geometry (no beam pockets)

(3) One-dimensional heat flow through the compartment boundaries

(4) Constant Heat Release Rate (HRR)

(5) The fire is located at the center of the compartment or away from the walls

Spreadsheet (FDT^s) Information:

Use the following FDT^s:

(a) Temperature_NV.xls (click on *Temperature_ NV Thermally Thick*)

Note: Since concrete thickness is greater than 1 inch, it is necessary to use the correlations for thermally thick material.

FDT^s Input Parameters:

- Compartment Width (w_c) = 8 ft

- Compartment Length (l_c) = 8 ft
- Compartment Height (h_c) = 6 ft
- Vent Width (w_v) = 2 ft
- Vent Height (h_v) = 3 ft
- Top of Vent from Floor (V_T) = 3 ft
- Interior Lining Thickness (δ) = 9 in
- Material: Select **Concrete** on the FDT[s]
- Fire Heat Release Rate $(\dot{Q})$ = 1,000 kW

Results*:

Hot Gas Layer Temperature (T_g) °C (°F) (Method of MQH)	Smoke Layer Height (z) m (ft) (Method of Yamana and Tanaka)
571 (1,060)	0.02 (0.07) compartment filled with smoke)

*see spreadsheet on next page at t = 3 min

Spreadsheet Calculations

CHAPTER 2 - METHOD OF PREDICTING HOT GAS LAYER TEMPERATURE AND SMOKE LAYER HEIGHT IN ROOM FIRE WITH NATURAL VENTILATION COMPARTMENT WITH THERMALLY THICK BOUNDARIES

The following calculations estimate the hot gas layer temperature and smoke layer height in enclosure fire.
Parameters should be specified ONLY IN THE YELLOW INPUT PARAMETER BOXES.
All subsequent output values are calculated by the spreadsheet and based on values specified in the input parameters. This spreadsheet is protected and secure to avoid errors due to a wrong entry in a cell(s).
The chapter in the guide should be read before an analysis is made.

INPUT PARAMETERS

COMPARTMENT INFORMATION

Compartment Width (w_c)	8.00	ft	2.4384 m
Compartment Length (l_c)	8.00	ft	2.4384 m
Compartment Height (h_c)	6.00	ft	1.8288 m
Vent Width (w_v)	2.00	ft	0.610 m
Vent Height (h_v)	3.00	ft	0.914 m
Top of Vent from Floor (V_T)	3.00	ft	0.914 m
Interior Lining Thickness (δ)	9.00	in	0.2286 m

For thermally thick case the interior lining thickness should be greater than 1 inch.

AMBIENT CONDITIONS

Ambient Air Temperature (T_a)	77.00	°F	25.00 °C 298.00 K
Specific Heat of Air (c_p)	1.00	kJ/kg-K	
Ambient air Density (ρ_a)	1.20	kg/m³	

THERMAL PROPERTIES OF COMPARTMENT ENCLOSING SURFACES FOR

Interior Lining Thermal Inertia (kpc)	2.9	$(kW/m^2\text{-}K)^2\text{-}sec$
Interior Lining Thermal Conductivity (k)	0.0016	kW/m-K
Interior Lining Specific Heat (c)	0.75	kJ/kg-K
Interior Lining Density (ρ)	2400	kg/m³

INTERIOR LINING EXPERIMENTAL THERMAL PROPERTIES FOR COMMON MATERIALS

Select Material: Concrete

Scroll to desired material then Click the selection

Material	kpc $(kW/m^2\text{-}K)^2\text{-}sec$	k (kW/m-K)	c (kJ/kg-K)	ρ (kg/m³)
Aluminum (pure)	500	0.206	0.895	2710
Steel (0.5% Carbon)	197	0.054	0.465	7850
Concrete	2.9	0.0016	0.75	2400
Brick	1.7	0.0008	0.8	2600
Glass, Plate	1.6	0.00076	0.8	2710
Brick/Concrete Block	1.2	0.00073	0.84	1900
Gypsum Board	0.18	0.00017	1.1	960
Plywood	0.16	0.00012	2.5	540
Fiber Insulation Board	0.16	0.00053	1.25	240
Chipboard	0.15	0.00015	1.25	800
Aerated Concrete	0.12	0.00026	0.96	500
Plasterboard	0.12	0.00016	0.84	950
Calcium Silicate Board	0.098	0.00013	1.12	700
Alumina Silicate Block	0.036	0.00014	1	260
Glass Fiber Insulation	0.0018	0.000037	0.8	60
Expanded Polystyrene	0.001	0.000034	1.5	20

Reference: Klote, J., J. Milke, *Principles of Smoke Management*, 2002, Page 270.

FIRE SPECIFICATIONS

Fire Heat Release Rate (Q) 1000.00 kW

METHOD OF McCAFFREY, QUINTIERE, AND HARKLEROAD (MQH)

Reference: *SFPE Handbook of Fire Protection Engineering*, 2nd Edition, Page 3-139.

$\Delta T_g = 6.85[Q^2/(A_v(h_v)^{1/2})(A_T h_k)]^{1/3}$

Where $\Delta T_g = T_g - T_a$ = upper layer gas temperature rise above ambient (K)
Q = heat release rate of the fire (kW)
A_v = area of ventilation opening (m^2)
h_v = height of ventilation opening (m)
h_k = convective heat transfer coefficient (kW/m^2-K)
A_T = total area of the compartment enclosing surface boundaries excluding area of vent openings (m^2)

Area of Ventilation Opening Calculation

$A_v = (w_v)(h_v)$

$A_v =$ 0.56 m^2

Thermal Penetration Time Calculation **Thermally Thick Material**

$t_p = (\rho c_p/k)(\delta/2)^2$

Where ρ = interior construction density (kg/m^3)
c_p = interior construction heat capacity (kJ/Kg-K)
k = interior construction thermal conductivity (kW/m-K)
δ = interior construction thickness (m)

$t_p =$ 14697.551 sec

Heat Transfer Coefficient Calculation

$h_k = v(k\rho c/t)$ for $t < t_p$

Where $k\rho c$ = interior construction thermal inertia $(kW/m^2\text{-}K)^2$-sec
(a thermal property of material responsible for the rate of temperature rise)
t = time after ignition (sec)

Area of Compartment Enclosing Surface Boundaries

$A_T = [2(w_c x l_c) + 2(h_c x w_c) + 2(h_c x dc)] - A_v$

$A_T =$ 29.17 m^2

Compartment Hot Gas Layer Temperature With Natural Ventilation

$\Delta T_g = 6.85[Q^2/(A_v(h_v)^{1/2})(A_T h_k)]^{1/3}$

$\Delta T_g = T_g - T_a$

$T_g = \Delta T_g + T_a$

RESULTS

Time after Ignition (t)		h_k	ΔT_g	T_g	T_g	T_g
(min)	(s)	(kW/m^2-K)	(K)	(K)	(°C)	(°F)
0	0.00	-	-	298.00	25.00	77.00
1	60	0.22	454.72	752.72	479.72	895.50
2	120	0.16	510.41	808.41	535.41	995.74
3	180	0.13	546.09	844.09	571.09	1059.97
4	240	0.11	572.91	870.91	597.91	1108.25
5	300	0.10	594.62	892.62	619.62	1147.32
10	600	0.07	667.44	965.44	692.44	1278.39
15	900	0.06	714.10	1012.10	739.10	1362.39
20	1200	0.05	749.18	1047.18	774.18	1425.52

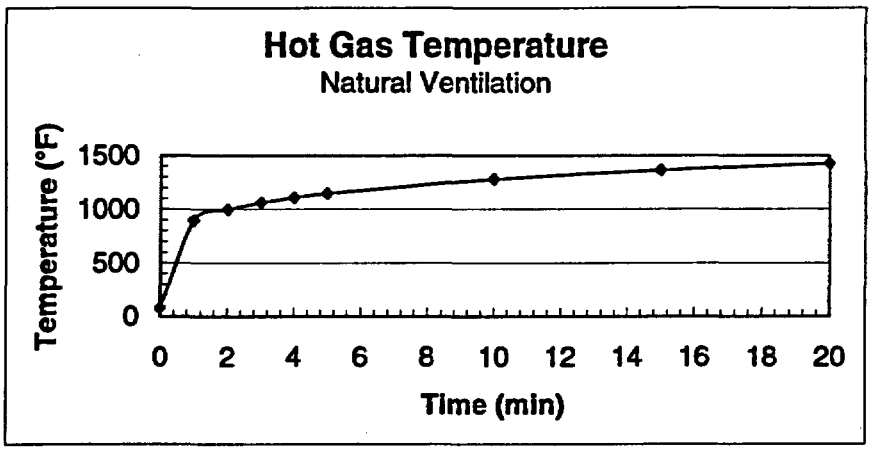

ESTIMATING SMOKE LAYER HEIGHT METHOD OF YAMANA AND TANAKA

$z = ((2kQ^{1/3}t/3A_c) + (1/h_c^{2/3})^{-3/2}$

Where z = smoke layer height (m)
Q = heat release rate of the fire (kW)
t = time after ignition (sec)
h_c = compartment height (m)
A_c = compartment floor area (m^2)
k = a constant given by $k = 0.076/\rho_g$
ρ_g = hot gas layer density (kg/m^3)
ρ_g is given by $\rho_g = 353/T_g$
T_g = hot gas layer temperature (K)

Compartment Area Calculation

$A_c = (w_c)(l_c)$

$A_c = 5.95\ m^2$

Hot Gas Layer Density Calculation

$\rho_g = 353/T_g$

Calculation for Constant K

$k = 0.076/\rho_g$

Smoke Gas Layer Height With Natural Ventilation

$z = ((2kQ^{1/3}t/3A_c) + (1/h_c^{2/3})^{-3/2}$

RESULTS

Time (min)	ρ_g kg/m^3	k	z (m)	z (ft)
0	1.20	0.063	1.83	6.00
1	0.47	0.162	0.03	0.08
2	0.44	0.174	0.02	0.08
3	0.42	0.182	0.02	0.07
4	0.41	0.188	0.02	0.07
5	0.40	0.192	0.02	0.07
10	0.37	0.208	0.02	0.06
15	0.35	0.218	0.02	0.05
20	0.34	0.225	0.02	0.05

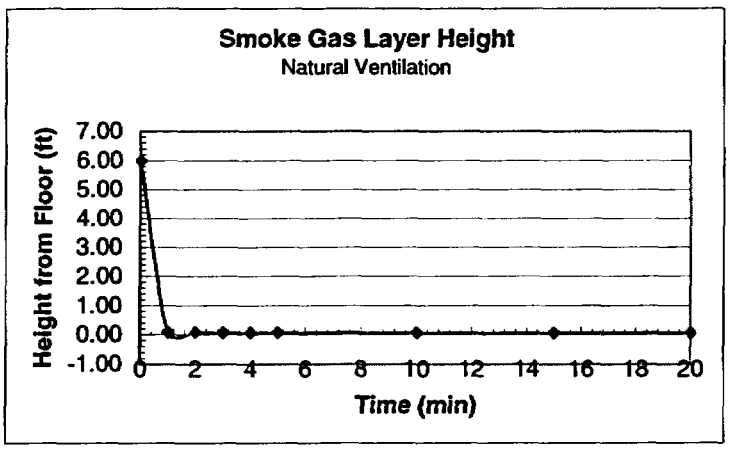

NOTE

The above calculations are based on principles developed in the SFPE Handbook of Fire Protection Engineering, 2nd Edition, 1995.

Calculations are based on certain assumptions and have inherent limitations. The results of such calculations may or may not have reasonable predictive capabilities for a given situation, and should only be interpreted by an informed user.

Although each calculation in the spreadsheet has been verified with the results of hand calculation, there is no absolute guarantee of the accuracy of these calculations.

Any questions, comments, concerns, and suggestions, or to report an error(s) in the spreadsheet, please send an email to nxi@nrc.gov.

NRR

Office of Nuclear Reactor Regulation

2.15.2 Forced Ventilation

Example Problem 2.15.2-1

Problem Statement

Consider a compartment that is 16 ft wide x 16 ft long x 12 ft high (w_c x l_c x h_c), with a vent opening that is 3 ft wide x 7 ft high (w_v x h_v). The forced ventilation rate is 1,000 cfm (exhaust). Calculate the hot gas layer temperature for a fire size of 500 kW at 2 minutes after ignition. The compartment boundaries are made of (a) 1 ft thick concrete and (b) 0.7 inch thick gypsum board.

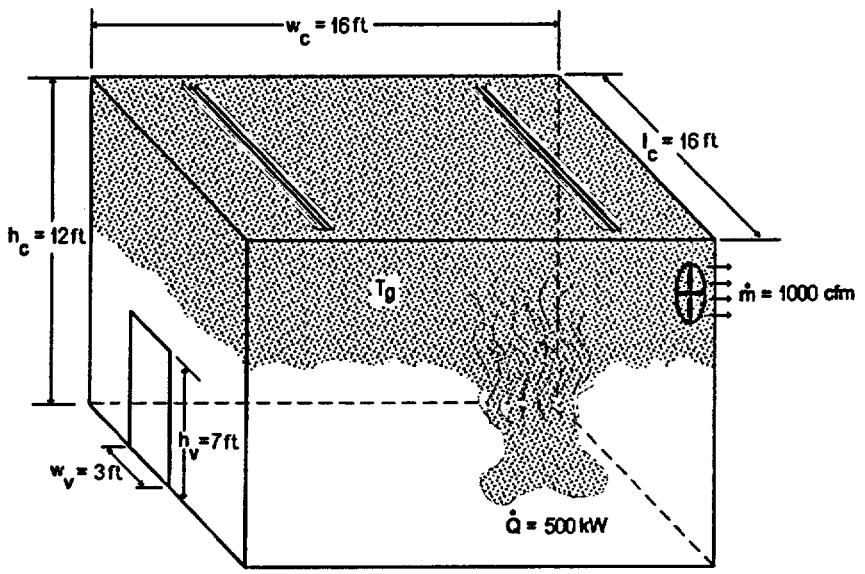

Example Problem 2-4: Compartment with Forced Ventilation

Solution

Purpose:

For two different interior lining materials determine. The hot gas layer temperature in the compartment (T_g) at t = 2 min after ignition.

Assumptions:

(1) Air properties (ambient) at 77 °F (25 °C)
(2) Simple rectangular geometry (no beam pockets)
(3) One-dimensional heat flow through the compartment boundaries
(4) Constant Heat Release Rate (HRR)
(5) The fire is located at the center of the compartment or away from the walls
(6) The bottom of the vent is at the floor level
(7) The compartment is open to the outside at the inlet (pressure = 1 atm)

Spreadsheet (FDT^s) Information:

Use the following FDT^s:

(a) For Concrete:

Temperature_FV1.xls (click on *Temperature - FV Thermally Thick*)
Temperature_FV2.xls (click on *Temperature - FV Thermally Thick*)

(b) For Gypsum Board:

Temperature_FV1.xls (click on *Temperature - FV Thermally Thin*)
Temperature_FV2.xls (click on *Temperature - FV Thermally Thin*)

Note: Since concrete thickness is greater than one inch, it is necessary to use the correlations for thermally thick material. However, since gypsum board thickness is less than 1 inch, it is necessary to use correlations for thermally thin material. Also, each spreadsheet has a different method to calculate the hot gas layer temperature (T_g). We are going to use both methods to compare the results.

FDT[s] Input Parameters: (for both spreadsheets)

- Compartment Width (w_c) = 16 ft
- Compartment Length (l_c) = 16 ft
- Compartment Height (h_c) = 12 ft
- Interior Lining Thickness (δ) = 12 in (concrete) and .7in (gypsum board)
- Material: Select **Concrete** and **Gypsum Board** on the respective FDT[s]
- Compartment Mass Ventilation Rate (m) = 1,000 cfm
- Fire Heat Release Rate $(\dot{Q})$ = 500 kW
- Time after ignition (t) = 2 min. (for sheet *Temperature_ FV Thermally Thin* only)

Results*

Boundary Material	Hot Layer Gas Temperature (T_g) °C (°F)	
	Method of Foote, Pagni & Alvares (FPA)	Method of Deal & Beyler
Concrete	142 (288)	88 (190)
Gypsum Board	344 (652)	517 (963)

*see spreadsheets on next page at t = 2 min.

Spreadsheet Calculations
Boundary Material: Concrete
FDT^s: Temperature_FV1.xls (Method of FPA)

CHAPTER 2 - METHOD OF PREDICTING HOT GAS LAYER TEMPERATURE IN ROOM FIRE WITH FORCED VENTILATION COMPARTMENT WITH THERMALLY THICK BOUNDARIES

The following calculations estimate the hot gas layer temperature and smoke layer height in enclosure fire.
Parameters should be specified ONLY IN THE YELLOW INPUT PARAMETER BOXES.
All subsequent output values are calculated by the spreadsheet and based on values specified in the input parameters. This spreadsheet is protected and secure to avoid errors due to a wrong entry in a cell(s).
The chapter in the guide should be read before an analysis is made.

INPUT PARAMETERS

COMPARTMENT INFORMATION

Compartment Width (w_c)	16.00	ft	4.88 m
Compartment Length (l_c)	16.00	ft	4.88 m
Compartment Height (h_c)	12.00	ft	3.66 m
Interior Lining Thickness (δ)	12.00	in	0.3048 m

For thermally thick case the interior lining thickness should be greater than 1 inch.

AMBIENT CONDITIONS

Ambient Air Temperature (T_a)	77.00	°F	25.00 °C 298.00 K
Specific Heat of Air (c_p)	1.00	kJ/kg-K	
Ambient air Density (ρ_a)	1.20	kg/m³	

THERMAL PROPERTIES OF COMPARTMENT ENCLOSING SURFACES

Interior Lining Thermal Inertia (kpc)	2.9	(kW/m²-K)²-sec
Interior Lining Thermal Conductivity (k)	0.0016	kW/m-K
Interior Lining Specific Heat (c)	0.75	kJ/kg-K
Interior Lining Density (ρ)	2400	kg/m³

INTERIOR LINING EXPERIMENTAL THERMAL PROPERTIES FOR COMMON MATERIALS

Material	kpc (kW/m²-K)²-sec	k (kW/m-K)	c (kJ/kg-K)	ρ (kg/m³)
Aluminum (pure)	500	0.206	0.895	2710
Steel (0.5% Carbon)	197	0.054	0.465	7850
Concrete	2.9	0.0016	0.75	2400
Brick	1.7	0.0008	0.8	2600
Glass, Plate	1.6	0.00076	0.8	2710
Brick/Concrete Block	1.2	0.00073	0.84	1900
Gypsum Board	0.18	0.00017	1.1	960
Plywood	0.16	0.00012	2.5	540
Fiber Insulation Board	0.16	0.00053	1.25	240
Chipboard	0.15	0.00015	1.25	800
Aerated Concrete	0.12	0.00026	0.96	500
Plasterboard	0.12	0.00016	0.84	950
Calcium Silicate Board	0.098	0.00013	1.12	700
Alumina Silicate Block	0.036	0.00014	1	260
Glass Fiber Insulation	0.0018	0.000037	0.8	60
Expanded Polystyrene	0.001	0.000034	1.5	20

Reference: Klote, J., J. Milke, *Principles of Smoke Management*, 2002 Page 270.

Select Material
Concrete
Scroll to desired material then Click on selection

COMPARTMENT MASS VENTILATION FLOW RATE

Forced Ventilation Flow Rate (m)	1000.00	cfm	0.472 m³/sec 0.566 kg/sec

FIRE SPECIFICATIONS

Fire Heat Release Rate (Q) 500.00 kW

METHOD OF FOOTE, PAGNI, AND ALVARES (FPA)

Reference: *SFPE Handbook of Fire Protection Engineering*, 2nd Edition, 1995, Page 3-140.

$\Delta T_g/T_a = 0.63(Q/mc_pT_a)^{0.72}(h_kA_T/mc_p)^{-0.36}$

Where $\Delta T_g = T_g - T_a$ = upper layer gas temperature rise above ambient (K)
T_a = ambient air temperature (K)
Q = heat release rate of the fire (kW)
m = compartment mass ventilation flow rate (kg/sec)
c_p = specific heat of air (kJ/Kg-K)
h_k = convective heat transfer coefficient (kW/m^2-K)
A_T = total area of the compartment enclosing surface boundaries (m^2)

Thermal Penetration Time Calculation **Thermally Thick Material**

$t_p = (\rho c_p/k)(\delta/2)^2$

Where ρ = interior construction density (kg/m^3)
c_p = interior construction heat capacity (kJ/Kg-K)
k = interior construction thermal conductivity (kW/m-K)
δ = interior construction thickness (m)

t_p = 26128.98 sec

Heat Transfer Coefficient Calculation

$h_k = v(k\rho c/t)$ for $t < t_p$

Where $k\rho c$ = interior construction thermal inertia (kW/m^2-K)^2-sec
(a thermal property of material responsible for the rate of temperature rise)
t = time after ignition (sec)

Area of Compartment Enclosing Surface Boundaries

$A_T = 2(w_c \times l_c) + 2(h_c \times w_c) + 2(h_c \times l_c)$

A_T = 118.92 m^2

Compartment Hot Gas Layer Temperature With Forced Ventilation

$\Delta T_g/T_a = 0.63(Q/mc_pT_0)^{0.72}(h_kA_T/mc_p)^{-0.36}$

$\Delta T_g = T_g - T_a$

$T_g = \Delta T_g + T_a$

RESULTS

Time after Ignition (t)		h_k	$\Delta T_g/T_0$	ΔT_g	T_g	T_g	T_g
(min)	(s)	(kW/m^2-K)		(K)	(K)	(°C)	(°F)
0	0	-	-	-	298.00	25.00	77.00
1	60	0.22	0.35	103.28	401.28	128.28	262.91
2	120	0.16	0.39	117.01	415.01	142.01	287.61
3	180	0.13	0.42	125.86	423.86	150.86	303.56
4	240	0.11	0.44	132.55	430.55	157.55	315.60
5	300	0.10	0.46	137.99	435.99	162.99	325.38
10	600	0.07	0.52	156.32	454.32	181.32	358.38
15	900	0.06	0.56	168.16	466.16	193.16	379.68
20	1200	0.05	0.59	177.10	475.10	202.10	395.77

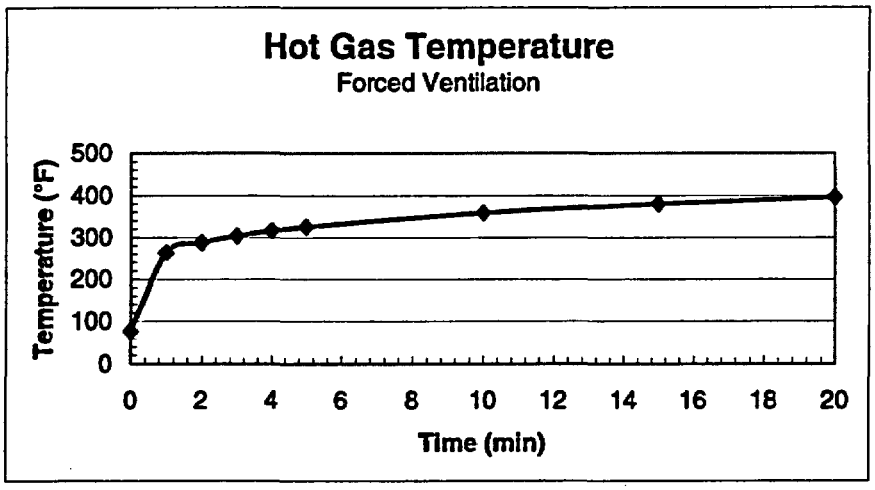

NOTE

The above calculations are based on principles developed in the SFPE Handbook of Fire Protection Engineering, 2nd Edition, 1995.

Calculations are based on certain assumptions and have inherent limitations. The results of such calculations may or may not have reasonable predictive capabilities for a given situation, and should only be interpreted by an informed user.

Although each calculation in the spreadsheet has been verified with the results of hand calculation, there is no absolute guarantee of the accuracy of these calculations.

Any questions, comments, concerns, and suggestions, or to report an error(s) in the spreadsheet, please send an email to nxi@nrc.gov.

NRR

Office of Nuclear Reactor Regulation

Boundary Material: Concrete
FDT³: Temperature_FV2.xls (Method of Deal and Beyler)

CHAPTER 2 - METHOD OF PREDICTING HOT GAS LAYER TEMPERATURE IN ROOM FIRE WITH FORCED VENTILATION COMPARTMENT WITH THERMALLY THICK BOUNDARIES

The following calculations estimate the hot gas layer temperature in enclosure fire.
Parameters should be specified ONLY IN THE YELLOW INPUT PARAMETER BOXES.
All subsequent output values are calculated by the spreadsheet and based on values specified in the input parameters. This spreadsheet is protected and secure to avoid errors due to a wrong entry in a cell(s).
The chapter in the guide should be read before an analysis is made.

INPUT PARAMETERS

COMPARTMENT INFORMATION

Compartment Width (w_c)	16.00	ft	4.88 m
Compartment Length (l_c)	16.00	ft	4.88 m
Compartment Height (h_c)	12.00	ft	3.66 m
Interior Lining Thickness (δ)	12.00	in	0.3048 m

For thermally thick case the interior lining thickness should be greater than 1 inch.

AMBIENT CONDITIONS

Ambient Air Temperature (T_a)	77.00	°F	25.00 °C 298.00 K
Specific Heat of Air (c_p)	1.00	kJ/kg-K	
Ambient air Density (ρ_a)	1.20	kg/m³	

THERMAL PROPERTIES OF COMPARTMENT ENCLOSING SURFACES

Interior Lining Thermal Inertia (kpc)	2.9	(kW/m²-K)²-sec
Interior Lining Thermal Conductivity (k)	0.0016	kW/m-K
Interior Lining Specific Heat (c)	0.75	kJ/kg-K
Interior Lining Density (ρ)	2400	kg/m³

INTERIOR LINING EXPERIMENTAL THERMAL PROPERTIES FOR COMMON MATERIALS

Material	kpc (kW/m²-K)²-sec	k (kW/m-K)	c (kJ/kg-K)	ρ (kg/m³)
Aluminum (pure)	500	0.206	0.895	2710
Steel (0.5% Carbon)	197	0.054	0.465	7850
Concrete	2.9	0.0016	0.75	2400
Brick	1.7	0.0008	0.8	2600
Glass, Plate	1.6	0.00076	0.8	2710
Brick/Concrete Block	1.2	0.00073	0.84	1900
Gypsum Board	0.18	0.00017	1.1	960
Plywood	0.16	0.00012	2.5	540
Fiber Insulation Board	0.16	0.00053	1.25	240
Chipboard	0.15	0.00015	1.25	800
Aerated Concrete	0.12	0.00026	0.96	500
Plasterboard	0.12	0.00016	0.84	950
Calcium Silicate Board	0.098	0.00013	1.12	700
Alumina Silicate Block	0.036	0.00014	1	260
Glass Fiber Insulation	0.0018	0.000037	0.8	60
Expanded Polystyrene	0.001	0.000034	1.5	20

Select Material
Concrete
Scroll to desired material then Click on selection

Reference: Klote, J., J. Milke, *Principles of Smoke Management*, 2002, Page 270.

COMPARTMENT MASS VENTILATION FLOW RATE

Forced Ventilation Flow Rate (m)	1000.00	cfm	0.472 m³/sec 0.566 kg/sec

FIRE SPECIFICATIONS

Fire Heat Release Rate (Q) 500.00 kW

METHOD OF DEAL AND BEYLER

Reference: *SFPE Handbook of Fire Protection Engineering*, 3rd Edition, 2002, Page 3-178.

Heat Transfer Coefficient Calculation

$h_k =$ $0.4\,v(k\rho c / t)$ for $t < t_p$

Where $k\rho c$ = interior construction thermal inertia $(kW/m^2\text{-}K)^2\text{-sec}$
(a thermal property of material responsible for the rate of temperature rise)
δ = thickness of interior lining (m)

$h_k =$ 0.088 $kW/m^2\text{-}K$

Area of Compartment Enclosing Surface Boundaries

$A_T = 2(w_c x l_c) + 2(h_c x w_c) + 2(h_c x l_c)$

$A_T =$ 118.92 m^2

Compartment Hot Gas Layer Temperature With Forced Ventilation

$\Delta T_g = Q / (m\, c_p + h_k A_T)$

Where $\Delta T_g = T_g - T_a$ = upper layer gas temperature rise above ambient (K)
T_a = ambient air temperature (K)
Q = heat release rate of the fire (kW)
m = compartment mass ventilation flow rate (kg/sec)
c_p = specific heat of air (kJ/Kg-K)
h_k = convective heat trensfer coefficient $(kW/m^2\text{-}K)$
A_T = total area of the compartment enclosing surface boundaries (m^2)

Results:

time after ignition (t)		h_k	ΔT_g	T_g	T_g	T_g
(min)	(s)	$(kW/m^2\text{-}K)$	(K)	(K)	(°C)	(°F)
0	0	-	-	298.00	25.00	77.00
1	60	0.09	45.36	343.36	70.36	158.64
2	120	0.06	62.81	360.81	87.81	190.05
3	180	0.05	75.71	373.71	100.71	213.28
4	240	0.04	86.28	384.28	111.28	232.31
5	300	0.04	95.36	393.36	120.36	248.66
10	600	0.03	129.09	427.09	154.09	309.36
15	900	0.02	153.07	451.07	178.07	352.53
20	1200	0.02	172.14	470.14	197.14	386.84

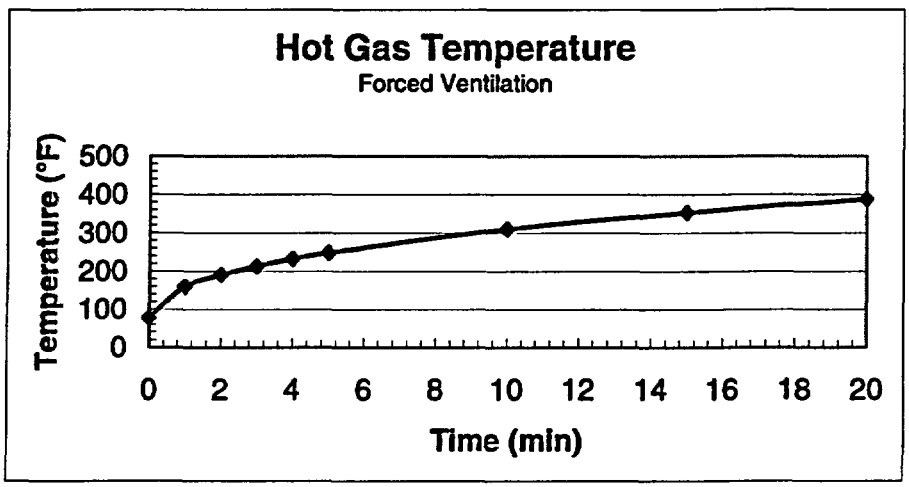

NOTE

The above calculations are based on principles developed in the SFPE Handbook of Fire Protection Engineering, 3rd Edition, 2002.

Calculations are based on certain assumptions and have inherent limitations. The results of such calculations may or may not have reasonable predictive capabilities for a given situation, and should only be interpreted by an informed user.

Although each calculation in the spreadsheet has been verified with the results of hand calculation, there is no absolute guarantee of the accuracy of these calculations.

Any questions, comments, concerns, and suggestions, or to report an error(s) in the spreadsheet, please send an email to nxd@nrc.gov.

NRR

Office of Nuclear Reactor Regulation

Boundary Material: Gypsum Board
FDT^s: Temperature_FV1.xls (Method of FPA)

CHAPTER 2 - METHOD OF PREDICTING HOT GAS LAYER TEMPERATURE IN ROOM FIRE WITH FORCED VENTILATION COMPARTMENT WITH THERMALLY THIN BOUNDARIES

The following calculations estimate the hot gas layer temperature and smoke layer height in enclosure fire.
Parameters should be specified ONLY IN THE YELLOW INPUT PARAMETER BOXES.
All subsequent output values are calculated by the spreadsheet and based on values specified in the input parameters. This spreadsheet is protected and secure to avoid errors due to a wrong entry in a cell(s).
The chapter in the guide should be read before an analysis is made.

INPUT PARAMETERS

COMPARTMENT INFORMATION

Compartment Width (w_c)	16.00	ft	4.88 m
Compartment Length (l_c)	16.00	ft	4.88 m
Compartment Height (h_c)	12.00	ft	3.66 m
Interior Lining Thickness (δ)	0.70	in	0.01778 m

For thermally thin case the interior lining thickness should be less than or equal to 1 inch.

AMBIENT CONDITIONS

Ambient Air Temperature (T_a)	77.00	°F	25.00 °C 298.00 K
Specific Heat of Air (c_p)	1.00	kJ/kg-K	
Ambient air Density (ρ_a)	1.20	kg/m^3	

THERMAL PROPERTIES OF COMPARTMENT ENCLOSING SURFACES

Interior Lining Thermal Inertia (kρc)	0.18	(kW/m^2-K)^2-sec
Interior Lining Thermal Conductivity (k)	0.00017	kW/m-K
Interior Lining Specific Heat (c)	1.1	kJ/kg-K
Interior Lining Density (ρ)	960	kg/m^3

INTERIOR LINING EXPERIMENTAL THERMAL PROPERTIES FOR COMMON MATERIALS

Material	kρc (kW/m^2-K)^2-sec	k (kW/m-K)	c (kJ/kg-K)	ρ (kg/m^3)
Aluminum (pure)	500	0.206	0.895	2710
Steel (0.5% Carbon)	197	0.054	0.465	7850
Concrete	2.9	0.0016	0.75	2400
Brick	1.7	0.0008	0.8	2600
Glass, Plate	1.6	0.00076	0.8	2710
Brick/Concrete Block	1.2	0.00073	0.84	1900
Gypsum Board	0.18	0.00017	1.1	960
Plywood	0.16	0.00012	2.5	540
Fiber Insulation Board	0.16	0.00053	1.25	240
Chipboard	0.15	0.00015	1.25	800
Aerated Concrete	0.12	0.00026	0.96	500
Plasterboard	0.12	0.00016	0.84	950
Calcium Silicate Board	0.098	0.00013	1.12	700
Alumina Silicate Block	0.036	0.00014	1	260
Glass Fiber Insulation	0.0018	3.7E-05	0.8	60
Expanded Polystyrene	0.001	3.4E-05	1.5	20

Reference: Klote, J., J. Milke, *Principles of Smoke Management*, 2002 Page 270.

Select Material: Gypsum Board

Scroll to desired material then Click on selection

COMPARTMENT MASS VENTILATION FLOW RATE

Forced Ventilation Flow Rate (m)	1000.00	cfm	0.472 m^3/sec 0.566 kg/sec

FIRE SPECIFICATIONS

Fire Heat Release Rate (Q)	500.00	kW

METHOD OF FOOTE, PAGNI, AND ALVARES (FPA)

Reference: *SFPE Handbook of Fire Protection Engineering*, 2nd Edition, 1995, Page 3-140.

$\Delta T_g/T_a = 0.63(Q/mc_pT_a)^{0.72}(h_kA_T/mc_p)^{-0.36}$

Where $\Delta T_g = T_g - T_a$ = upper layer gas temperature rise above ambient (K)
T_a = ambient air temperature (K)
Q = heat release rate of the fire (kW)
m = compartment mass ventilation flow rate (kg/sec)
c_p = specific heat of air (kJ/Kg-K)
h_k = convective heat transfer coefficient (kW/m^2-°C)
A_T = total area of the compartment enclosing surface boundaries (m^2)

Thermal Penetration Time Calculation **Thermally Thin Material**

$t_p = (\rho c_p/k)(\delta/2)^2$

Where ρ = interior construction density (kg/m^3)
c_p = interior construction heat capacity (kJ/Kg-K)
k = interior construction thermal conductivity (kW/m-K)
δ = interior construction thickness (m)

$t_p =$ 490.93 sec

Heat Transfer Coefficient Calculation

$h_k = k/\delta$ for $t > t_p$

Where k = interior construction thermal conductivity (kW/m-K)
δ = interior construction thickness (m)

$h_k =$ 0.01 kW/m^2-K

Area of Compartment Enclosing Surface Boundaries

$A_T = 2(w_c \times l_c) + 2(h_c \times w_c) + 2(h_c \times l_c)$

$A_T =$ 118.92 m^2

Compartment Hot Gas Layer Temperature With Forced Ventilation

$\Delta T_g/T_a = 0.63(Q/mc_pT_a)^{0.72}(h_kA_T/mc_p)^{-0.36}$

$\Delta T_g/T_a =$ 1.07

$\Delta T_g =$ 319.30 K

$\Delta T_g = T_g - T_a$

$T_g = \Delta T_g + T_a$

$T_g =$ 617.30 K

$T_g =$ 344.30 °C 651.74 °F ANSWER

NOTE

The above calculations are based on principles developed in the SFPE Handbook of Fire Protection Engineering, 2nd Edition, 1995.
Calculations are based on certain assumptions and have inherent limitations. The results of such calculations may or may not have reasonable predictive capabilities for a given situation, and should only be interpreted by an informed user.
Although each calculation in the spreadsheet has been verified with the results of hand calculation, there is no absolute guarantee of the accuracy of these calculations.
Any questions, comments, concerns, and suggestions, or to report an error(s) in the spreadsheet, please send an email to nxi@nrc.gov.

NRR
Office of Nuclear Reactor Regulation

Boundary Material: Gypsum Board
FDT^s: Temperature_FV2.xls (Method of Deal and Beyler)

CHAPTER 2 - METHOD OF PREDICTING HOT GAS LAYER TEMPERATURE IN ROOM FIRE WITH FORCED VENTILATION COMPARTMENT WITH THERMALLY THIN BOUNDARIES

The following calculations estimate the hot gas layer temperature and smoke layer height in enclosure fire.
Parameters should be specified ONLY IN THE YELLOW INPUT PARAMETER BOXES.
All subsequent output values are calculated by the spreadsheet and based on values specified in the input parameters. This spreadsheet is protected and secure to avoid errors due to a wrong entry in a cell(s).
The chapter in the guide should be read before an analysis is made.

INPUT PARAMETERS

COMPARTMENT INFORMATION

Compartment Width (w_c)	16.00	ft	4.88 m
Compartment Length (l_c)	16.00	ft	4.88 m
Compartment Height (h_c)	12.00	ft	3.66 m
Interior Lining Thickness (δ)	0.70	in	0.01778 m

For thermally thin case the interior lining thickness should be less than or equal to 1 inch.

AMBIENT CONDITIONS

Ambient Air Temperature (T_a)	82.00	°F	27.78 °C 300.78 K
Specific Heat of Air (c_p)	1.00	kJ/kg-K	
Ambient air Density (ρ_a)	1.20	kg/m^3	

THERMAL PROPERTIES OF COMPARTMENT ENCLOSING SURFACES

Interior Lining Thermal Inertia (kρc)	0.18	(kW/m^2-K)^2-sec
Interior Lining Thermal Conductivity (k)	0.00017	kW/m-K
Interior Lining Specific Heat (c)	1.1	kJ/kg-K
Interior Lining Density (ρ)	960	kg/m^3

INTERIOR LINING EXPERIMENTAL THERMAL PROPERTIES FOR COMMON MATERIALS

Select Material: Gypsum Board

Material	kρc (kW/m^2-K)^2-sec	k (kW/m-K)	c (kJ/kg-K)	ρ (kg/m^3)
Aluminum (pure)	500	0.206	0.895	2710
Steel (0.5% Carbon)	197	0.054	0.465	7850
Concrete	2.9	0.0016	0.75	2400
Brick	1.7	0.0008	0.8	2600
Glass, Plate	1.6	0.00076	0.8	2710
Brick/Concrete Block	1.2	0.00073	0.84	1900
Gypsum Board	0.18	0.00017	1.1	960
Plywood	0.16	0.00012	2.5	540
Fiber Insulation Board	0.16	0.00053	1.25	240
Chipboard	0.15	0.00015	1.25	800
Aerated Concrete	0.12	0.00026	0.96	500
Plasterboard	0.12	0.00016	0.84	950
Calcium Silicate Board	0.098	0.00013	1.12	700
Alumina Silicate Block	0.036	0.00014	1	260
Glass Fiber Insulation	0.0018	3.7E-05	0.8	60
Expanded Polystyrene	0.001	3.4E-05	1.5	20

Scroll to desired material then Click on selection

Reference: Klote, J., J. Milke, *Principles of Smoke Management*, 2002, Page 270.

COMPARTMENT MASS VENTILATION FLOW RATE

Forced Ventilation Flow Rate (m)	1000.00	cfm	0.472 m^3/sec 0.566 kg/sec

FIRE SPECIFICATIONS

Fire Heat Release Rate (Q)	500.00	kW

METHOD OF DEAL AND BEYLER

Reference: *SFPE Handbook of Fire Protection Engineering*, 3rd Edition, 2002, Page 3-178.

$\Delta T_g = Q / (m\, c_p + h_k A_T)$

Where $\Delta T_g = T_g - T_a$ = upper layer gas temperature rise above ambient (K)
T_a = ambient air temperature (K)
Q = heat release rate of the fire (kW)
m = compartment mass ventilation flow rate (kg/sec)
c_p = specific heat of air (kJ/Kg-K)
h_k = convective heat transfer coefficient (kW/m^2-K)
A_T = total area of the compartment enclosing surface boundaries (m^2)

Heat Transfer Coefficient Calculation

$h_k =$ $0.4\,(k/\delta)$ for $t > t_p$

Where k = thermal conductivity of interior lining (kW/m-K)
(a thermal property of material responsible for the rate of temperature rise)
δ = thickness of interior lining (m)

$h_k =$ 0.004 kW/m^2-K

Area of Compartment Enclosing Surface Boundaries

$A_T =$ $2(w_c x l_c) + 2(h_c x w_c) + 2(h_c x l_c)$

$A_T =$ 118.92 m^2

Compartment Hot Gas Layer Temperature With Forced Ventilation

$\Delta T_g = Q / (m\, c_p + h_k A_T)$

$\Delta T_g = T_g - T_a$ 489.65

$T_g =$ 790.43 K

$T_g =$ 517.43 °C 963.374 °F **ANSWER**

NOTE

The above calculations are based on principles developed in the SFPE Handbook of Fire Protection Engineering, 3rd Edition, 2002.
Calculations are based on certain assumptions and have inherent limitations. The results of such calculations may or may not have reasonable predictive capabilities for a given situation, and should only be interpreted by an informed user.
Although each calculation in the spreadsheet has been verified with the results of hand calculation, there is no absolute guarantee of the accuracy of these calculations.
Any questions, comments, concerns, and suggestions, or to report an error(s) in the spreadsheet, please send an email to nxi@nrc.gov.

NRR

Office of Nuclear Reactor Regulation

Example Problem 2.15.2-2

Problem Statement

Consider a compartment that is 12 ft wide x 10 ft long x 8 ft high (w_c x l_c x h_c) with a vent opening that is 3 ft wide x 7 ft high (w_v x h_v). The compartment boundaries are made of 0.5 ft thick gypsum board. The forced ventilation rate is 800 cfm (exhaust). Calculate the hot gas layer temperature in the compartment for a fire size of 300 kW at 2 minutes.

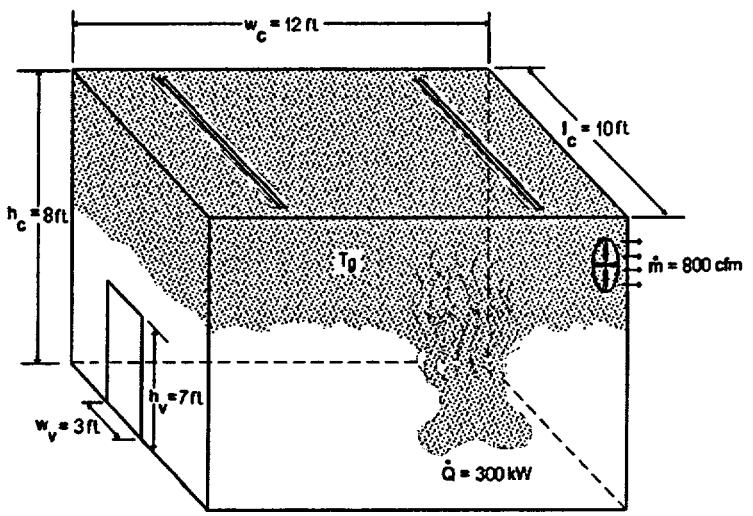

Example Problem 2-5: Compartment with Forced Ventilation

Solution

Purpose:

(1) Determine the hot gas layer temperature in the compartment (T_g) at t = 2 min after ignition.

Assumptions:

(1) Air properties (ambient) at 77 °F (25 °C)
(2) Simple rectangular geometry: no beam pockets
(3) One-dimensional heat flow through the compartment boundaries
(4) Constant Heat Release Rate (HRR)
(5) The fire is located at the center of the compartment or away from the walls
(6) The bottom of the vent is at the floor level
(7) The compartment is open to the outside at the inlet (pressure = 1 atm)

Spreadsheet (FDT^s) Information:

Use the following FDT^s:

(a) Temperature_FV1.xls (click on *Temperature - FV Thermally Thick*)
(b) Temperature_FV2.xls (click on *Temperature - FV Thermally Thick*)

Note: Since gypsum board thickness is more than 1 inch, it is required to use correlations for thermally thick materials. Also, each spreadsheet has a different method to calculate the hot gas layer temperature. We are going to use both methods to compare values.

FDT^s Input Parameters: (for both spreadsheets)

- Compartment Width (w_c) = 12 ft

- Compartment Length (l_c) = 10 ft
- Compartment Height (h_c) = 8 ft
- Interior Lining Thickness (δ) = 6 in
- Material: Select **Gypsum Board** on the FDT*
- Compartment Mass Ventilation Rate $(\dot{m})$ = 800 cfm
- Fire Heat Release Rate $(\dot{Q})$ = 300 kW

Results*

Boundary Material	Hot Layer Gas Temperature (T_g) °C (°F)	
	Method of Foote, Pagni & Alvares (FPA)	Method of Deal & Beyler
Gypsum Board	216 (421)	255 (491)

*see spreadsheet on next page at t = 2 min

Spreadsheet Calculations
FDT^s: Temperature_FV1.xls (Method of FPA)

CHAPTER 2 - METHOD OF PREDICTING HOT GAS LAYER TEMPERATURE IN ROOM FIRE WITH FORCED VENTILATION COMPARTMENT WITH THERMALLY THICK BOUNDARIES

The following calculations estimate the hot gas layer temperature and smoke layer height in enclosure fire.
Parameters should be specified ONLY IN THE YELLOW INPUT PARAMETER BOXES.
All subsequent output values are calculated by the spreadsheet and based on values specified in the input parameters. This spreadsheet is protected and secure to avoid errors due to a wrong entry in a cell(s).
The chapter in the guide should be read before an analysis is made.

INPUT PARAMETERS

COMPARTMENT INFORMATION

Compartment Width (w_c)	12.00	ft	3.66 m
Compartment Length (l_c)	10.00	ft	3.05 m
Compartment Height (h_c)	8.00	ft	2.44 m
Interior Lining Thickness (δ)	6.00	in	0.1524 m

For thermally thick case the interior lining thickness should be greater than 1 inch.

AMBIENT CONDITIONS

Ambient Air Temperature (T_a)	77.00	°F	25.00 °C 298.00 K
Specific Heat of Air (c_p)	1.00	kJ/kg-K	
Ambient air Density (ρ_a)	1.20	kg/m³	

THERMAL PROPERTIES OF COMPARTMENT ENCLOSING SURFACES

Interior Lining Thermal Inertia (kρc)	0.18	(kW/m²-K)²-sec
Interior Lining Thermal Conductivity (k)	0.00017	kW/m-K
Interior Lining Specific Heat (c)	1.1	kJ/kg-K
Interior Lining Density (ρ)	960	kg/m³

INTERIOR LINING EXPERIMENTAL THERMAL PROPERTIES FOR COMMON MATERIALS

Select Material: Gypsum Board

Material	kρc (kW/m²-K)²-sec	k (kW/m-K)	c (kJ/kg-K)	ρ (kg/m³)
Aluminum (pure)	500	0.206	0.895	2710
Steel (0.5% Carbon)	197	0.054	0.465	7850
Concrete	2.9	0.0016	0.75	2400
Brick	1.7	0.0008	0.8	2600
Glass, Plate	1.6	0.00076	0.8	2710
Brick/Concrete Block	1.2	0.00073	0.84	1900
Gypsum Board	0.18	0.00017	1.1	960
Plywood	0.16	0.00012	2.5	540
Fiber Insulation Board	0.16	0.00053	1.25	240
Chipboard	0.15	0.00015	1.25	800
Aerated Concrete	0.12	0.00026	0.96	500
Plasterboard	0.12	0.00016	0.84	950
Calcium Silicate Board	0.098	0.00013	1.12	700
Alumina Silicate Block	0.036	0.00014	1	260
Glass Fiber Insulation	0.0018	0.000037	0.8	60
Expanded Polystyrene	0.001	0.000034	1.5	20

Scroll to desired material then Click on selection

Reference: Klote, J., J. Milke, *Principles of Smoke Management*, 2002 Page 270.

COMPARTMENT MASS VENTILATION FLOW RATE

Forced Ventilation Flow Rate (m)	800.00	cfm	0.378 m³/sec 0.453 kg/sec

FIRE SPECIFICATIONS

Fire Heat Release Rate (Q)	300.00	kW

METHOD OF FOOTE, PAGNI, AND ALVARES (FPA)

Reference: *SFPE Handbook of Fire Protection Engineering*, 2nd Edition, 1995, Page 3-140.

$\Delta T_g/T_a = 0.63(Q/mc_pT_a)^{0.72}(h_kA_T/mc_p)^{-0.36}$

Where $\Delta T_g = T_g - T_a$ = upper layer gas temperature rise above ambient (K)
T_a = ambient air temperature (K)
Q = heat release rate of the fire (kW)
m = compartment mass ventilation flow rate (kg/sec)
c_p = specific heat of air (kJ/Kg-K)
h_k = convective heat transfer coefficient (kW/m^2-K)
A_T = total area of the compartment enclosing surface boundaries (m^2)

Thermal Penetration Time Calculation **Thermally Thick Material**

$t_p = (\rho c_p/k)(\delta/2)^2$

Where ρ = interior construction density (kg/m^3)
c_p = interior construction heat capacity (kJ/Kg-K)
k = interior construction thermal conductivity (kW/m-K)
δ = interior construction thickness (m)

t_p = 36068.24 sec

Heat Transfer Coefficient Calculation

$h_k = v(k\rho c/t)$ for $t < t_p$

Where $k\rho c$ = interior construction thermal inertia (kW/m^2-K)^2-sec
(a thermal property of material responsible for the rate of temperature rise)
t = time after ignition (sec)

Area of Compartment Enclosing Surface Boundaries

$A_T = 2(w_c \times l_c) + 2(h_c \times w_c) + 2(h_c \times l_c)$

A_T = 55.00 m^2

Compartment Hot Gas Layer Temperature With Forced Ventilation

$\Delta T_g/T_a = 0.63(Q/mc_pT_0)^{0.72}(h_kA_T/mc_p)^{-0.36}$

$\Delta T_g = T_g - T_a$

$T_g = \Delta T_g + T_a$

RESULTS

Time after Ignition (t)		h_k	$\Delta T_g/T_0$	ΔT_g	T_g	T_g	T_g
(min)	(s)	(kW/m^2-K)		(K)	(K)	(°C)	(°F)
0	0	-	-	-	298.00	25.00	77.00
1	60	0.05	0.57	168.66	466.66	193.66	380.59
2	120	0.04	0.64	191.08	489.08	216.08	420.94
3	180	0.03	0.69	205.54	503.54	230.54	446.98
4	240	0.03	0.73	216.47	514.47	241.47	466.64
5	300	0.02	0.76	225.34	523.34	250.34	482.61
10	600	0.02	0.86	255.28	553.28	280.28	536.51
15	900	0.01	0.92	274.61	572.61	299.61	571.30
20	1200	0.01	0.97	289.21	587.21	314.21	597.57

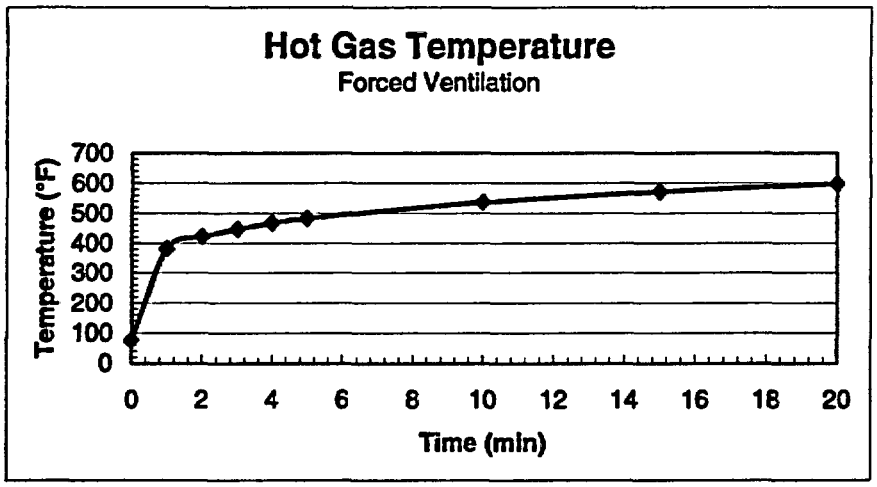

NOTE

The above calculations are based on principles developed in the SFPE Handbook of Fire Protection Engineering, 2nd Edition, 1995.

Calculations are based on certain assumptions and have inherent limitations. The results of such calculations may or may not have reasonable predictive capabilities for a given situation, and should only be interpreted by an informed user.

Although each calculation in the spreadsheet has been verified with the results of hand calculation, there is no absolute guarantee of the accuracy of these calculations.

Any questions, comments, concerns, and suggestions, or to report an error(s) in the spreadsheet, please send an email to nxi@nrc.gov.

NRR

Office of Nuclear Reactor Regulation

FDT^s: Temperature_FV1.xls (Method of Dean and Beyler)

CHAPTER 2 - METHOD OF PREDICTING HOT GAS LAYER TEMPERATURE IN ROOM FIRE WITH FORCED VENTILATION COMPARTMENT WITH THERMALLY THICK BOUNDARIES

The following calculations estimate the hot gas layer temperature in enclosure fire.
Parameters should be specified ONLY IN THE YELLOW INPUT PARAMETER BOXES.
All subsequent output values are calculated by the spreadsheet and based on values specified in the input parameters. This spreadsheet is protected and secure to avoid errors due to a wrong entry in a cell(s).
The chapter in the guide should be read before an analysis is made.

INPUT PARAMETERS

COMPARTMENT INFORMATION

Compartment Width (w_c)	12.00	ft	3.66 m
Compartment Length (l_c)	10.00	ft	3.05 m
Compartment Height (h_c)	8.00	ft	2.44 m
Interior Lining Thickness (δ)	6.00	in	0.1524 m

For thermally thick case the interior lining thickness should be greater than 1 inch.

AMBIENT CONDITIONS

Ambient Air Temperature (T_a)	77.00	°F	25.00 °C 298.00 K
Specific Heat of Air (c_p)	1.00	kJ/kg-K	
Ambient air Density (ρ_a)	1.20	kg/m^3	

THERMAL PROPERTIES OF COMPARTMENT ENCLOSING SURFACES

Interior Lining Thermal Inertia ($k\rho c$)	0.18	(kW/m^2-K)^2-sec
Interior Lining Thermal Conductivity (k)	0.00017	kW/m-K
Interior Lining Specific Heat (c)	1.1	kJ/kg-K
Interior Lining Density (ρ)	960	kg/m^3

INTERIOR LINING EXPERIMENTAL THERMAL PROPERTIES FOR COMMON MATERIALS

Material	$k\rho c$ (kW/m^2-K)^2-sec	k (kW/m-K)	c (kJ/kg-K)	ρ (kg/m^3)
Aluminum (pure)	500	0.206	0.895	2710
Steel (0.5% Carbon)	197	0.054	0.465	7850
Concrete	2.9	0.0016	0.75	2400
Brick	1.7	0.0008	0.8	2600
Glass, Plate	1.6	0.00076	0.8	2710
Brick/Concrete Block	1.2	0.00073	0.84	1900
Gypsum Board	0.18	0.00017	1.1	960
Plywood	0.16	0.00012	2.5	540
Fiber Insulation Board	0.16	0.00053	1.25	240
Chipboard	0.15	0.00015	1.25	800
Aerated Concrete	0.12	0.00026	0.96	500
Plasterboard	0.12	0.00016	0.84	950
Calcium Silicate Board	0.098	0.00013	1.12	700
Alumina Silicate Block	0.036	0.00014	1	260
Glass Fiber Insulation	0.0018	0.000037	0.8	60
Expanded Polystyrene	0.001	0.000034	1.5	20

Select Material: Gypsum Board

Scroll to desired material then Click on selection

Reference: Klote, J., J. Milke, Principles of Smoke Management, 2002, Page 270.

COMPARTMENT MASS VENTILATION FLOW RATE

Forced Ventilation Flow Rate (m)	800.00	cfm	0.378 m^3/sec 0.453 kg/sec

FIRE SPECIFICATIONS

Fire Heat Release Rate (Q) 300.00 kW

METHOD OF DEAL AND BEYLER

Reference: *SFPE Handbook of Fire Protection Engineering*, 3rd Edition, 2002, Page 3-178.

Heat Transfer Coefficient Calculation

$h_k =$ $0.4\ v(kpc / t)$ for $t < t_p$

Where kpc = interior construction thermal inertia $(kW/m^2\text{-}K)^2$-sec
(a thermal property of material responsible for the rate of temperature rise)
δ = thickness of interior lining (m)

$h_k =$ 0.022 $kW/m^2\text{-}K$

Area of Compartment Enclosing Surface Boundaries

$A_T = 2(w_c x l_c) + 2(h_c x w_c) + 2(h_c x l_c)$

$A_T =$ 55.00 m^2

Compartment Hot Gas Layer Temperature With Forced Ventilation

$\Delta T_g = Q / (m\ c_p + h_k A_T)$

Where $\Delta T_g = T_g - T_a$ = upper layer gas temperature rise above ambient (K)
T_a = ambient air temperature (K)
Q = heat release rate of the fire (kW)
m = compartment mass ventilation flow rate (kg/sec)
c_p = specific heat of air (kJ/Kg-K)
h_k = convective heat transfer coefficient $(kW/m^2\text{-}K)$
A_T = total area of the compartment enclosing surface boundaries (m^2)

Results:

time after ignition (t)		h_k	ΔT_g	T_g	T_g	T_g
(min)	(s)	$(kW/m^2\text{-}K)$	(K)	(K)	(°C)	(°F)
0	0	-	-	298.00	25.00	77.00
1	60	0.02	180.94	478.94	205.94	402.69
2	120	0.02	229.87	527.87	254.87	490.76
3	180	0.01	261.15	559.15	286.15	547.07
4	240	0.01	284.21	582.21	309.21	588.58
5	300	0.01	302.44	600.44	327.44	621.39
10	600	0.01	359.66	657.66	384.66	724.40
15	900	0.01	392.57	690.57	417.57	783.63
20	1200	0.00	415.22	713.22	440.22	824.40

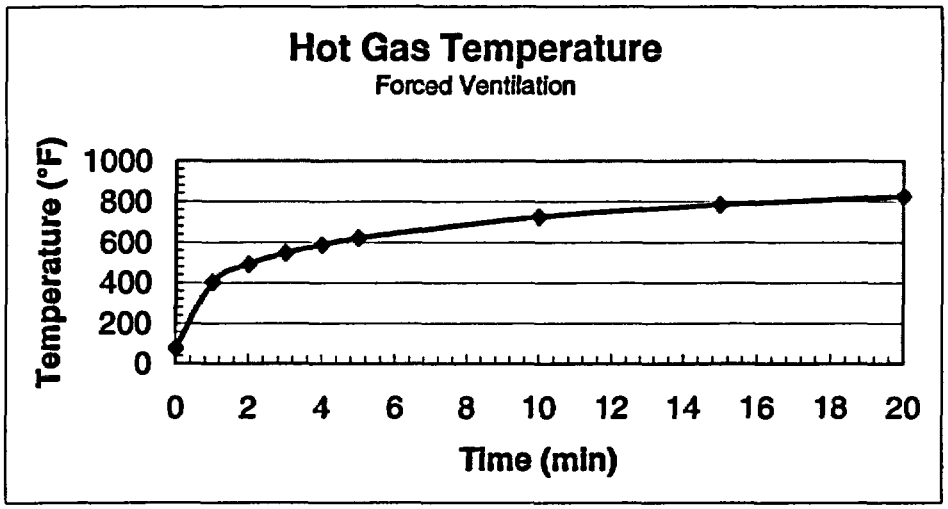

NOTE

The above calculations are based on principles developed in the SFPE Handbook of Fire Protection Engineering, 3rd Edition, 2002.

Calculations are based on certain assumptions and have inherent limitations. The results of such calculations may or may not have reasonable predictive capabilities for a given situation, and should only be interpreted by an informed user.

Although each calculation in the spreadsheet has been verified with the results of hand calculation, there is no absolute guarantee of the accuracy of these calculations.

Any questions, comments, concerns, and suggestions, or to report an error(s) in the spreadsheet, please send an email to nxi@nrc.gov.

NRR

Office of Nuclear Reactor Regulation

Problem 2.15.2-3

Problem Statement

Consider a compartment that is 8 ft wide x 8 ft long x 6 ft high (w_c x l_c x h_c). The compartment boundaries are made of 0.75 ft thick brick. The forced ventilation rate is 400 cfm (exhaust). Calculate the hot gas layer temperature in the compartment for a fire size of 500 kW at 2 minutes.

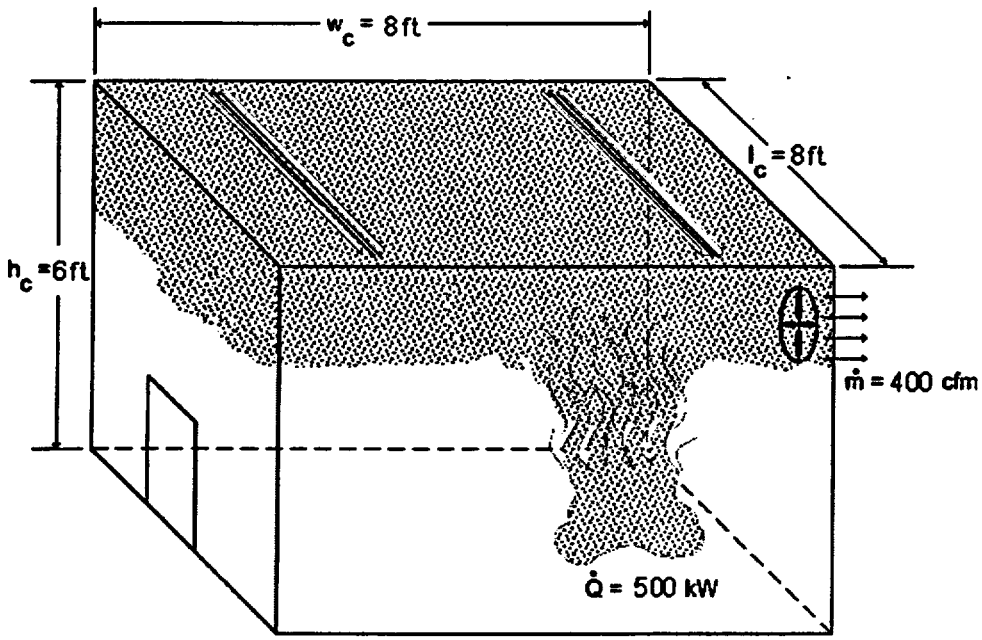

Example Problem2-6: Compartment with Forced Ventilation

Solution

Purpose:

(1) Determine the hot gas layer temperature in the compartment (T_g) at t = 2 min after ignition.

Assumptions:

(1) Air properties (ambient) at 77 °F (25 °C)
(2) Simple rectangular geometry (no beam pockets)
(3) One-dimensional heat flow through the compartment boundaries
(4) Constant Heat Release Rate (HRR)
(5) The fire is located at the center of the compartment or away from the walls
(6) The bottom of the vent is at the floor level
(7) The compartment is open to the outside at the inlet (pressure = 1 atm)

Spreadsheet (FDT*) Information:

Use the following FDT*:

(a) Temperature_FV1.xls (click on *Temperature - FV Thermally Thick*)
(b) Temperature_FV2.xls (click on *Temperature - FV Thermally Thick*)

Note: Since the interior lining material thickness is more than 1 inch, it is required to use correlations for thermally thick materials. Also, each spreadsheet has a different method to calculate the hot gas layer temperature. We are going to use both methods to compare values.

FDT[s] Input Parameters:

- Compartment Width (w_c) = 8 ft
- Compartment Length (l_c) = 8 ft
- Compartment Height (h_c) = 6 ft
- Interior Lining Thickness (δ) = 9 in
- Material: Select **Brick** on the FDT[s]
- Compartment Mass Ventilation Rate $(\dot{m})$ = 400 cfm
- Fire Heat Release Rate $(\dot{Q})$ = 500 kW

Results*

Boundary Material	Hot Layer Gas Temperature (T_g) °C (°F)	
	Method of Foote, Pagni & Alvares (FPA)	Method of Deal & Beyler
Brick	320 (608)	329 (625)

*see spreadsheet on next page at t = 2 min.

Spreadsheet Calculations
FDT^s: Temperature_FV1.xls (Method of FPA)

CHAPTER 2 - METHOD OF PREDICTING HOT GAS LAYER TEMPERATURE IN ROOM FIRE WITH FORCED VENTILATION COMPARTMENT WITH THERMALLY THICK BOUNDARIES

The following calculations estimate the hot gas layer temperature and smoke layer height in enclosure fire.
Parameters should be specified ONLY IN THE YELLOW INPUT PARAMETER BOXES.
All subsequent output values are calculated by the spreadsheet and based on values specified in the input parameters. This spreadsheet is protected and secure to avoid errors due to a wrong entry in a cell(s).
The chapter in the guide should be read before an analysis is made.

INPUT PARAMETERS

COMPARTMENT INFORMATION

Compartment Width (w_c)	8.00	ft	2.44 m
Compartment Length (l_c)	8.00	ft	2.44 m
Compartment Height (h_c)	6.00	ft	1.83 m
Interior Lining Thickness (δ)	9.00	in	0.2286 m

For thermally thick case the interior lining thickness should be greater than 1 inch.

AMBIENT CONDITIONS

Ambient Air Temperature (T_a)	77.00	°F	25.00 °C 298.00 K
Specific Heat of Air (c_p)	1.00	kJ/kg-K	
Ambient air Density (ρ_a)	1.20	kg/m³	

THERMAL PROPERTIES OF COMPARTMENT ENCLOSING SURFACES

Interior Lining Thermal Inertia (kpc)	1.7	(kW/m²-K)²-sec
Interior Lining Thermal Conductivity (k)	0.0008	kW/m-K
Interior Lining Specific Heat (c)	0.8	kJ/kg-K
Interior Lining Density (ρ)	2600	kg/m³

INTERIOR LINING EXPERIMENTAL THERMAL PROPERTIES FOR COMMON MATERIALS

Select Material: Brick

Material	kpc (kW/m²-K)²-sec	k (kW/m-K)	c (kJ/kg-K)	ρ (kg/m³)
Aluminum (pure)	500	0.206	0.895	2710
Steel (0.5% Carbon)	197	0.054	0.465	7850
Concrete	2.9	0.0016	0.75	2400
Brick	1.7	0.0008	0.8	2600
Glass, Plate	1.6	0.00076	0.8	2710
Brick/Concrete Block	1.2	0.00073	0.84	1900
Gypsum Board	0.18	0.00017	1.1	960
Plywood	0.16	0.00012	2.5	540
Fiber Insulation Board	0.16	0.00053	1.25	240
Chipboard	0.15	0.00015	1.25	800
Aerated Concrete	0.12	0.00026	0.96	500
Plasterboard	0.12	0.00016	0.84	950
Calcium Silicate Board	0.098	0.00013	1.12	700
Alumina Silicate Block	0.036	0.00014	1	260
Glass Fiber Insulation	0.0018	0.000037	0.8	60
Expanded Polystyrene	0.001	0.000034	1.5	20

Scroll to desired material then Click on selection

Reference: Klote, J., J. Milke, *Principles of Smoke Management*, 2002 Page 270.

COMPARTMENT MASS VENTILATION FLOW RATE

Forced Ventilation Flow Rate (m)	400.00	cfm	0.189 m³/sec 0.227 kg/sec

FIRE SPECIFICATIONS

Fire Heat Release Rate (Q)	500.00	kW

METHOD OF FOOTE, PAGNI, AND ALVARES (FPA)

Reference: SFPE Handbook of Fire Protection Engineering, 2nd Edition, 1995, Page 3-140.

$\Delta T_g/T_a = 0.63(Q/mc_pT_a)^{0.72}(h_kA_T/mc_p)^{-0.36}$

Where $\Delta T_g = T_g - T_a$ = upper layer gas temperature rise above ambient (K)
T_a = ambient air temperature (K)
Q = heat release rate of the fire (kW)
m = compartment mass ventilation flow rate (kg/sec)
c_p = specific heat of air (kJ/Kg-K)
h_k = convective heat transfer coefficient (kW/m^2-K)
A_T = total area of the compartment enclosing surface boundaries (m^2)

Thermal Penetration Time Calculation ***Thermally Thick Material***

$t_p = (\rho c_p/k)(\delta/2)^2$

Where ρ = interior construction density (kg/m^3)
c_p = interior construction heat capacity (kJ/Kg-K)
k = interior construction thermal conductivity (kW/m-K)
δ = interior construction thickness (m)

t_p = 33967.67 sec

Heat Transfer Coefficient Calculation

$h_k = \sqrt{(k\rho c/t)}$ for $t < t_p$

Where $k\rho c$ = interior construction thermal inertia (kW/m^2-K)^2-sec
(a thermal property of material responsible for the rate of temperature rise)
t = time after ignition (sec)

Area of Compartment Enclosing Surface Boundaries

$A_T = 2(w_c \times l_c) + 2(h_c \times w_c) + 2(h_c \times l_c)$

A_T = 29.73 m^2

Compartment Hot Gas Layer Temperature With Forced Ventilation

$\Delta T_g/T_a = 0.63(Q/mc_pT_a)^{0.72}(h_kA_T/mc_p)^{-0.36}$

$\Delta T_g = T_g - T_a$

$T_g = \Delta T_g + T_a$

RESULTS

Time after Ignition (t)		h_k	$\Delta T_g/T_a$	ΔT_g	T_g	T_g	T_g
(min)	(s)	(kW/m^2-K)		(K)	(K)	(°C)	(°F)
0	0	-	-	-	298.00	25.00	77.00
1	60	0.17	0.87	260.48	558.48	285.48	545.86
2	120	0.12	0.99	295.09	593.09	320.09	608.17
3	180	0.10	1.07	317.43	615.43	342.43	648.38
4	240	0.08	1.12	334.31	632.31	359.31	678.75
5	300	0.08	1.17	348.01	646.01	373.01	703.41
10	600	0.05	1.32	394.25	692.25	419.25	786.65
15	900	0.04	1.42	424.10	722.10	449.10	840.38
20	1200	0.04	1.50	446.64	744.64	471.64	880.95

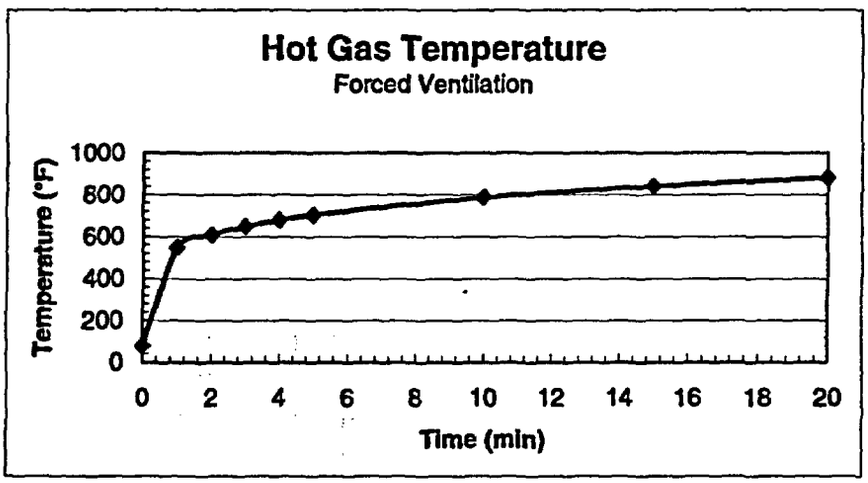

NOTE

The above calculations are based on principles developed in the SFPE Handbook of Fire Protection Engineering, 2nd Edition, 1995.

Calculations are based on certain assumptions and have inherent limitations. The results of such calculations may or may not have reasonable predictive capabilities for a given situation, and should only be interpreted by an informed user.

Although each calculation in the spreadsheet has been verified with the results of hand calculation, there is no absolute guarantee of the accuracy of these calculations.

Any questions, comments, concerns, and suggestions, or to report an error(s) in the spreadsheet, please send an email to nxi@nrc.gov.

NRR

Office of Nuclear Reactor Regulation

CHAPTER 2 - METHOD OF PREDICTING HOT GAS LAYER TEMPERATURE IN ROOM FIRE WITH FORCED VENTILATION COMPARTMENT WITH THERMALLY THICK BOUNDARIES

The following calculations estimate the hot gas layer temperature in enclosure fire.
Parameters should be specified ONLY IN THE YELLOW INPUT PARAMETER BOXES.
All subsequent output values are calculated by the spreadsheet and based on values specified in the input parameters. This spreadsheet is protected and secure to avoid errors due to a wrong entry in a cell(s).
The chapter in the guide should be read before an analysis is made.

INPUT PARAMETERS

COMPARTMENT INFORMATION

Compartment Width (w_c)	8.00	ft	2.44 m
Compartment Length (l_c)	8.00	ft	2.44 m
Compartment Height (h_c)	6.00	ft	1.83 m
Interior Lining Thickness (δ)	9.00	in	0.2286 m

For thermally thick case the interior lining thickness should be greater than 1 inch.

AMBIENT CONDITIONS

Ambient Air Temperature (T_a)	77.00	°F	25.00 °C 298.00 K
Specific Heat of Air (c_p)	1.00	kJ/kg-K	
Ambient air Density (ρ_a)	1.20	kg/m^3	

THERMAL PROPERTIES OF COMPARTMENT ENCLOSING SURFACES

Interior Lining Thermal Inertia (kpc)	1.7	(kW/m^2-K)^2-sec
Interior Lining Thermal Conductivity (k)	0.0008	kW/m-K
Interior Lining Specific Heat (c)	0.8	kJ/kg-K
Interior Lining Density (ρ)	2600	kg/m^3

INTERIOR LINING EXPERIMENTAL THERMAL PROPERTIES FOR COMMON MATERIALS

Select Material: Brick

Scroll to desired material then Click on selection

Material	kpc (kW/m^2-K)^2-sec	k (kW/m-K)	c (kJ/kg-K)	ρ (kg/m^3)
Aluminum (pure)	500	0.206	0.895	2710
Steel (0.5% Carbon)	197	0.054	0.465	7850
Concrete	2.9	0.0016	0.75	2400
Brick	1.7	0.0008	0.8	2600
Glass, Plate	1.6	0.00076	0.8	2710
Brick/Concrete Block	1.2	0.00073	0.84	1900
Gypsum Board	0.18	0.00017	1.1	960
Plywood	0.16	0.00012	2.5	540
Fiber Insulation Board	0.16	0.00053	1.25	240
Chipboard	0.15	0.00015	1.25	800
Aerated Concrete	0.12	0.00026	0.96	500
Plasterboard	0.12	0.00016	0.84	950
Calcium Silicate Board	0.098	0.00013	1.12	700
Alumina Silicate Block	0.036	0.00014	1	260
Glass Fiber Insulation	0.0018	0.000037	0.8	60
Expanded Polystyrene	0.001	0.000034	1.5	20

Reference: Klote, J., J. Milke, *Principles of Smoke Management*, 2002, Page 270.

COMPARTMENT MASS VENTILATION FLOW RATE

Forced Ventilation Flow Rate (m)	400.00	cfm	0.189 m^3/sec 0.227 kg/sec

FIRE SPECIFICATIONS

Fire Heat Release Rate (Q)	500.00	kW

METHOD OF DEAL AND BEYLER

Reference: *SFPE Handbook of Fire Protection Engineering*, 3rd Edition, 2002, Page 3-178.

Heat Transfer Coefficient Calculation

$h_k =$ $0.4\ v(kpc / t)$ for $t < t_p$

Where kpc = interior construction thermal inertia $(kW/m^2\text{-}K)^2\text{-sec}$
(a thermal property of material responsible for the rate of temperature rise)
δ = thickness of interior lining (m)

$h_k =$ $0.067\ kW/m^2\text{-}K$

Area of Compartment Enclosing Surface Boundaries

$A_T =$ $2(w_c x l_c) + 2(h_c x w_c) + 2(h_c x l_c)$

$A_T =$ $29.73\ m^2$

Compartment Hot Gas Layer Temperature With Forced Ventilation

$\Delta T_g = Q / (m\ c_p + h_k A_T)$

Where $\Delta T_g = T_g - T_a$ = upper layer gas temperature rise above ambient (K)
T_a = ambient air temperature (K)
Q = heat release rate of the fire (kW)
m = compartment mass ventilation flow rate (kg/sec)
c_p = specific heat of air (kJ/Kg-K)
h_k = convective heat transfer coefficient $(kW/m^2\text{-}K)$
A_T = total area of the compartment enclosing surface boundaries (m^2)

Results:

time after ignition (t)		h_k	ΔT_g	T_g	T_g	T_g
(min)	(s)	$(kW/m^2\text{-}K)$	(K)	(K)	(°C)	(°F)
0	0	-	-	298.00	25.00	77.00
1	60	0.07	224.40	622.40	249.40	480.92
2	120	0.05	304.52	602.52	329.52	625.14
3	180	0.04	361.74	659.74	386.74	728.14
4	240	0.03	407.38	705.38	432.38	810.28
5	300	0.03	445.75	743.75	470.75	879.35
10	600	0.02	581.72	879.72	606.72	1124.10
15	900	0.02	672.62	970.62	697.62	1287.72
20	1200	0.02	741.71	1039.71	766.71	1412.08

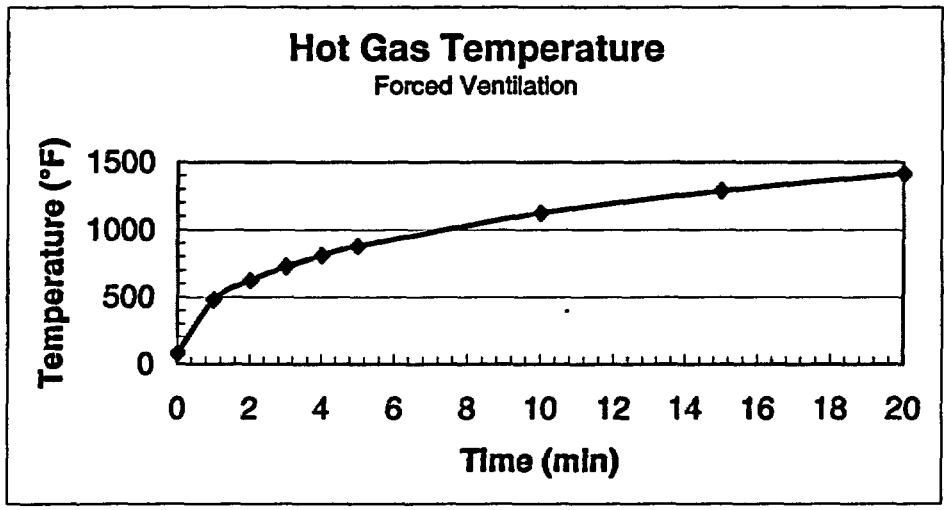

NOTE

The above calculations are based on principles developed in the SFPE Handbook of Fire Protection Engineering, 3rd Edition, 2002.

Calculations are based on certain assumptions and have inherent limitations. The results of such calculations may or may not have reasonable predictive capabilities for a given situation, and should only be interpreted by an informed user.

Although each calculation in the spreadsheet has been verified with the results of hand calculation, there is no absolute guarantee of the accuracy of these calculations.

Any questions, comments, concerns, and suggestions, or to report an error(s) in the spreadsheet, please send an email to rxd@nrc.gov.

NRR

Office of Nuclear Reactor Regulation

CHAPTER 3. ESTIMATING BURNING CHARACTERISTICS OF LIQUID POOL FIRE, HEAT RELEASE RATE, BURNING DURATION, AND FLAME HEIGHT

3.1 Objectives

This chapter has the following objectives:

- Identify the predominant flammable material in an NPP.
- Introduce the methods that are used to estimate the heat release rate.
- Identify the factors that influence the heat release rate and burning rate.
- Explain how to analyze pool fires in NPPs.
- Explain how to analyze the burning duration of pool fires.
- Identify the zones of a candle and the categories of a flame.
- Describe the importance of ceiling configurations.
- Explain turbulent diffusion flames.
- Introduce the factors that determine how fast an object will heat.
- Define relevant terms, including heat release rate, heat of combustion, burning duration, flame height, adiabatic flame, laminar, and turbulent flames.

3.2 Heat Release Rate

Fire development is generally characterized in terms of heat release rate (HRR) vs. time. Thus, determining the HRR (or burning rate)[1] is an essential aspect of a fire hazard analysis (FHA). The relationship between HRR (or $\dot{Q}$) and time for a certain scenario is termed the design fire curve for that scenario, as illustrated in Figure 3-1.

For a routine FHA, it is acceptable to broadly approximate the burning rates (HRRs). For instance, post-flashover structure analyses are often based on the fire duration or severity associated with an aggregate fuel loading (combustible load per unit floor area). However, if it is essential to estimate specific fire effects within an enclosure, it is essential to more accurately determine the burning rate characteristics (i.e., HRR history).

The HRR is not a fundamental property of a fuel and, therefore, cannot be calculated from the basic material properties. It is usually determined from testing. Table 3-1 lists some HRR characteristic values obtained by burning various fuel packages and recording the heat output from various sources.

[1]The heat release rate may be thought of as the "power" of the fire and is some times referred to as fire "power".

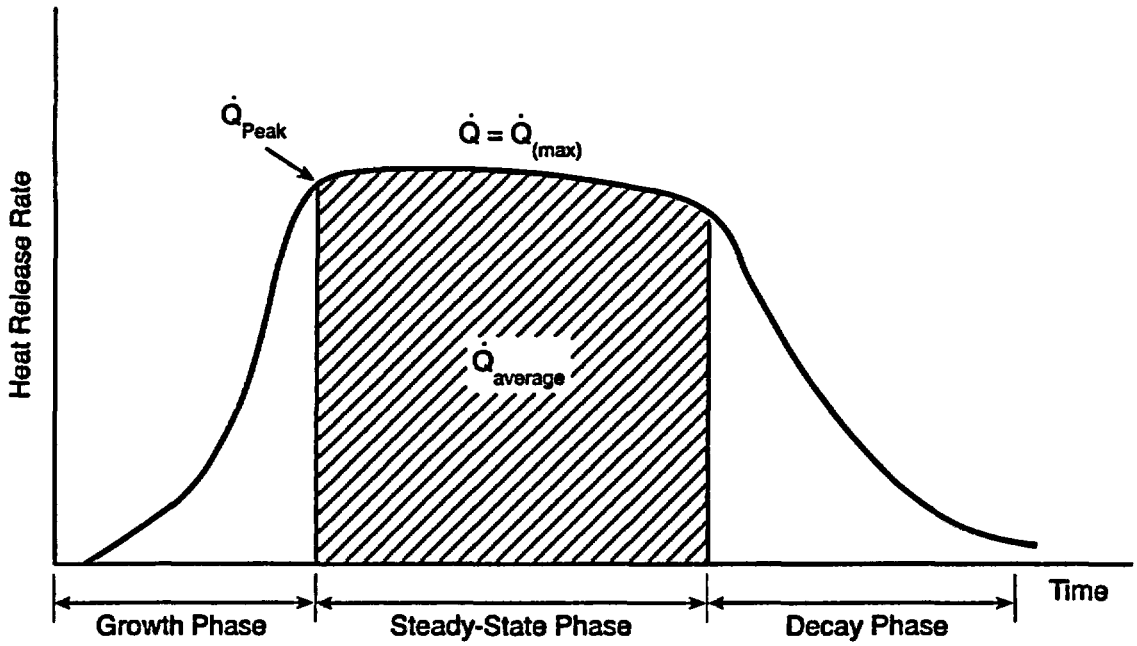

Figure 3-1 A Simple Design Fire Curve

Table 3-1. Rough Measure of Heat Released or Generated from Various Sources (Karlsson and Quintiers, 1999) (Waiting for copyright permission)	

Estimates of fire source intensities (i.e., HRR) can be based either on direct measurements of the burning rates of similar large fuel configurations or the extrapolation of small-scale test data obtained under simulated thermal conditions. In the absence of measured HRR data, the fire protection engineer (FPE) must estimate the HRR history for a particular fuel. While not as accurate as laboratory testing, sufficient information exists in the literature to permit estimates of initial fire growth, peak burning rates, and fire duration for various fuels and fuel geometries.

Various studies (Lee, 1985, Nowlen, 1986, and 1987, Chavez, 1987, and Babrauskas, 1991) have measured and reported representative unit HRR values for a number of fuels present in an NPP, such as electrical cables, electrical cabinets, and transient combustibles (e.g., flammable/combustible liquids and trash). Flammable/combustible liquid spill fires and trash fires are the most commonly postulated transient fuel exposure fires, while electrical cable and cabinet fires are the most commonly postulated fixed fuel fires in NPPs. In fact, the plastic insulation and jackets on electrical cables are usually the predominant flammable material in an NPP.

The most common method to measure HRR is known as "oxygen consumption calorimetry" (ASTM E1354). The basis of this method is that most gases, liquids, and solids release a constant amount of energy for each unit mass of oxygen consumed. This constant has been found to be 13,100 kJ/kg oxygen consumed and is considered to be accurate within ±5-percent for most hydrocarbon fuels. After ignition, all of the combustion products are collected in a hood and removed through an exhaust duct in which the flow rate and composition of the gases is measured to determine how much oxygen has been used for combustion. The HRR then can be computed using the constant relationship between oxygen consumed and energy released, as discussed above.

Another common method of assessing HRR is to measure the burning rate, which is also known as the mass loss rate. This is done by weighing the fuel package as it burns, using weighing devices or a load cell. Estimating the HRR based on the mass loss rate requires knowledge of the effective heat of combustion. The HRR is then calculated using the following equation:

$$\dot{Q} = \dot{m}\Delta H_{c,eff} \qquad (3\text{-}1)$$

Where:

$\dot{Q}$ = heat release rate (kW)

$\dot{m}$ = burning or mass loss rate (kg/sec)

$\Delta H_{c,eff}$ = effective heat of combustion (kJ/kg)

The average burning rates for many products and materials have been experimentally determined in free burning tests. For many materials, the burning rate is reported per horizontal burning area in units of kg/m^2-sec. If the area of the fuel and the effective heat of combustion are known, the above equation becomes:

$$\dot{Q} = \dot{m}''\Delta H_{c,eff} A_f \qquad (3\text{-}2)$$

Where:

$\dot{m}''$ = burning or mass loss rate per unit area per unit time (kg/m^2-sec)

A_f = horizontal burning area of the fuel (m^2)

The average burning rate per unit area per unit time, heat of combustion, and fuel-specific properties have been tabulated for a number of different fuels. (See Table 3-2 for free burning fire characteristics of various fuels.)

Table 3-2. Large-Pool Fire Burning Rate Data (Babrauskas, 1995)			
Material	Mass Loss Rate $\dot{m}''$ (kg/m²-sec)	Heat of Combustion $\Delta H_{c,\,eff}$ (kJ/kg)	Density ρ (kg/m³)
Cryogenics			
Liquid H_2	0.017	12,000	70
LNG (mostly CH_4)	0.078	50,000	415
LPG (mostly C_3H_8)	0.099	46,000	585
Alcohols			
Methanol (CH_3OH)	0.017	20,000	796
Ethanol (C_2H_5OH)	0.015	26,800	794
Simple Organic Fuels			
Butane (C_4H_{10})	0.078	45,700	573
Benzene (C_6H_6)	0.085	40,100	874
Hexane (C_6H_{14})	0.074	44,700	650
Heptane (C_7H_{16})	0.101	44,600	675
Xylene (C_8H_{10})	0.090	40,800	870
Acetone (C_3H_6O)	0.041	25,800	791
Dioxane ($C_4H_8O_2$)	0.018	26,200	1,035
Diethyl ether ($C_4H_{10}O$)	0.085	34,200	714
Petroleum Products			
Benzine	0.048	44,700	740
Gasoline	0.055	43,700	740
Kerosine	0.039	43,200	820
JP-4	0.051	43,500	760
JP-5	0.054	43,000	810
Transformer oil, hydrocarbon	0.039	46,400	760
Fuel oil, heavy	0.035	39,700	940–1,000
Crude oil	0.022–0.045	42,500–42,700	830–880
Solids			
Polymrthylmethacrylate $(C_5H_8O_2)_n$	0.020	24,900	1,184
Polypropylene $(C_3H_6)_n$	0.018	43,200	905
Polystyrene $(C_8H_8)_n$	0.034	39,700	1,050

The effective heat of combustion (sometimes called the chemical heat of combustion) is a measure of how much energy is released when a unit mass of material is oxidized. This value is typically given in kJ/kg. It is important to distinguish between the complete heat of combustion and the effective heat of combustion. The complete heat of combustion is the measure of energy released when combustion is complete, leaving no residual fuel and releasing all of the chemical energy of the material. The effective heat of combustion is more appropriate for a fire in which combustion

is not necessarily complete and some residue remains. This is also sometimes termed the chemical heat of combustion.

For example, Babrauskas (1983 and 1986) distinguishes four burning modes of pool fires as defined by size in Table 3-3.

Table 3-3. Pool Fire Burning Modes	
Pool Fire Diameter (m)	Burning Mode
<0.05 (2 in)	Convective, laminar
<0.2 (8 in)	Convective, turbulent
0.2 to 1.0 (8 in to 3.3 ft) >1.0 (3.3 ft)	Radiative, optically thin Radiative, optically thick

3.2.1 Enclosure Effects on Mass Loss Rate

When an object (fuel) burns inside a compartment, the two main factors that influence the fire growth are energy released and burning or mass loss rate of the fuel. The smoke and hot gases will accumulate at the compartment ceiling level and heat the compartment boundaries (ceiling and walls). These compartment boundary surfaces and the hot gases radiate heat toward the fuel surface, thereby increasing the fuel burning rate. Second, the compartment openings (doors, windows, and other leakage areas) may restrict the availability of oxygen needed for combustion, thereby decreasing the amount of fuel consumed and increasing in the concentration of unburned gases. If the ventilation opening is small, the limited availability of oxygen causes incomplete combustion, thereby in a decreasing the HRR, which in turn reduces the gas temperature and heat transfer to the fuel surface, while the fuel continues to release volatile gases at a similar or somewhat lower rate. When partial combustion of the gases occurs within the compartment, the gas leaving the compartment mixes with oxygen and flames appear at the ventilation opening. In summary, compartment heat transfer can increase the burning or mass loss rate of the fuel, while compartment ventilation of the available air near the floor decreases the mass loss rate. Figure 3-2 illustrates the compartment effect on mass loss rate in burning a hypothetical item.

3.2.2 Pool Fires

A pool fire involves a horizontal, upward-facing, combustible fuel. The term implies the fuel in the liquid phase (pool), but it can also apply to flat slabs of solids fuels which decompose in a manner similar to liquids [e.g., Polymethylmethacrylate (PMMA) or Plexiglass and Polyethylene (PE)]. Liquid fuel may burn in an open storage container or on the ground in the form of a spill. For a given amount of fuel, spills with a large surface area burn with a high HRR for a short duration, and spills with a smaller surface area burn with a lower HRR for a longer duration. When spilled, the flammable/combustible liquid may form a pool of any shape and thickness, and may be controlled by the confinement of the area geometry such as a dike or curbing. Once ignited, a pool fire spreads rapidly over the surface of the liquid spill area. The burning rate of a given fuel can also be affected by its substrate (i.e., gravel and sand) in a spill. For flammable/combustible liquids, flame spread rates range from approximately 10 cm/sec (4 in/sec) to 2 m/sec (6.6 ft/sec). Pool fires in NPPs can result from leakage of the reactor coolant pump (RCP) at the gland or the seal,

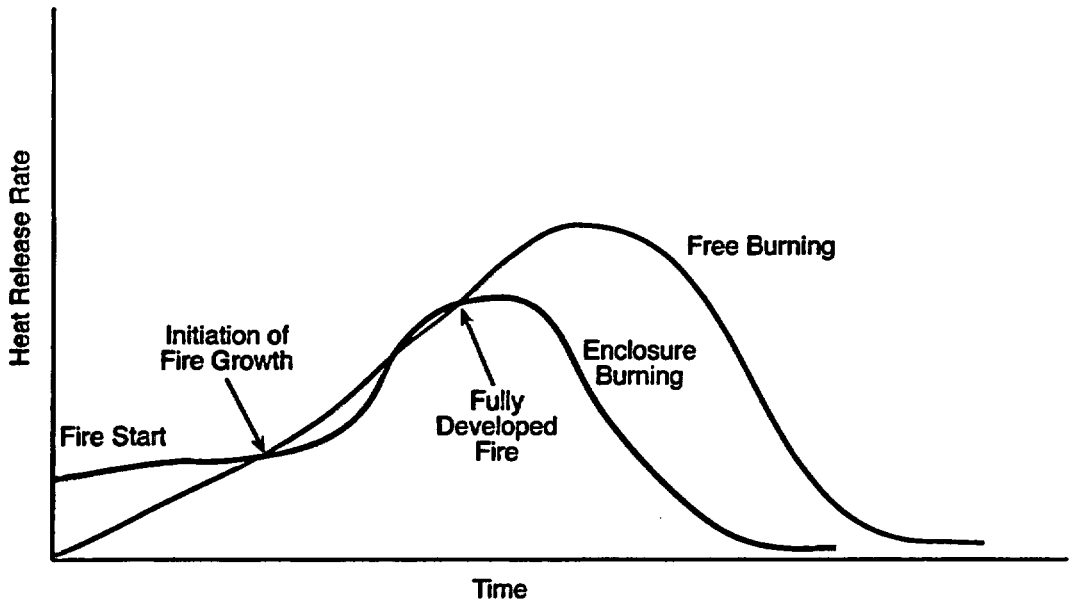

Figure 3-2 Free and Enclosure Fire Power

oil spill from electrical transformers, and pumps or fuel spray from pipe flanges on equipment such as stand-by diesel generator (SBDGs). Transient fuels such as liquids used for cleaning and painting are sources of pool fire in an NPP. Figure 3-3 depicts the dynamic feature of a pool fire. Table 3-4 summarizes the burning rate of combustible liquids and solids found in typical NPPs.

Table 3-4. Burning Rate Data of Some Common Combustible Materials Found in Nuclear Power Plants

Fuel	Mass Burning Rate $\dot{m}''$ (kg/m²-sec)	Heat of Combustion $\Delta H_{c,eff}$ (kJ/kg)	Density ρ (kg/m³)
Cable Materials			
PE/PVC	0.0044	25,100	-
XPE/FRXPE	0.0037	28,300	-
XPE/Neoprene	0.0043	10,300	-
PE, PP/Cl.S.PE	0.0026	26,800	-
FRXPE/Cl.S.PE	0.0033	17,300	-
PE, Nylon/PVC, Nylon	0.0034	10,200	-
Silicone, glass braid, asbestos	0.0045	24,000	-
XPE/XPE	0.0044	12,500	-
FEP - Teflon™	0.007	3,200	-
ETFE - Tefzel™	0.014	12,600	-
Flammable/Combustible Liquid			
Diesel Oil	0.044	44,400	918
Gasoline	0.055	43,700	740
Kerosene	0.039	43,200	820
Transformer Oil	0.039	46,000	760
Lube Oil (used in RCP motors and turbine lubrication)	-	-	-
Cellulose Material			
Wood	0.055	13,000–15,000	420–640

*For lubricating oil use properties of transformer oil, which has similar burning characteristics.

CL.S.PE-Chlorosulfonated Polyethylene; FR-Fire Retardant; PE-Polyethylene; PP-Polypropylenen; PVC-Polyvinylchloride; Teflon™ - FEP-Fluorinated Polyethylene-Polypropylenen; Tefzel™ - ETFE-Ethylenetetrafluoroethylene; XLPE-Crosslinked Polyethylene.

3.3 Burning Duration

The burning rate of a given fuel is controlled by both its chemistry and its form. Fuel chemistry refers to its composition (e.g., cellulosic *vs.* petrochemical). Common cellulosic materials include wood, paper, cotton, and fabric. Petrochemical materials include liquids or plastics that are largely

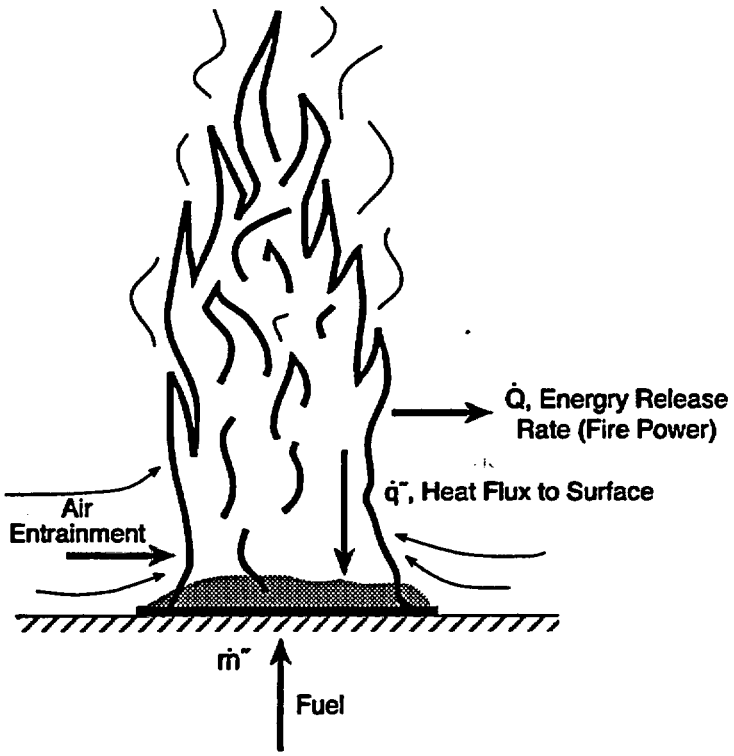

Figure 3-3 Dynamic Features of a Pool Fire

petroleum based. The form (or shape) of the fuel material also has an effect on its burning rate.

A particularly important form factor is the surface area to mass ratio of the fuel, which is defined as the surface area available to combust as compared to the total mass of the material.

The concept of burning duration is a way of characterizing the hazard of a compartment fire in terms of the length of time the fuel in the compartment could be expected to burn, which depends on the total amount of fuel available. Fuel loading is the concept that describes the expected burning duration, provided that the necessary amount of air is available (i.e., fuel-controlled fire). A fire burning at a constant HRR consumes fuel mass at a constant rate. Thus, the mass of material being burned per second and the amount of material available to be consumed, it is possible to estimate the total burning duration of a fuel.

3.3.1 Burning Duration of Pool Fire

When a spilled liquid is ignited, a pool fire develops. Provided that an ample supply of oxygen is available, the amount of surface area of the given liquid becomes the defining parameter. The diameter of the pool fire depends upon the release mode, release quantity (or rate), and burning rate. In some instances, the spill is unrestricted by curbs or dikes, allowing it to spread across the ground and establish a large exposed surface area. Liquid pool fires with a given amount of fuel can burn for long periods of time if they have a small surface area, or for short periods of time over a large spill area. For a fixed mass or volume of flammable/combustible liquid, the burning duration (t_b) for the pool fire is estimated using the following expression:

$$t_b = \frac{4V}{\pi D^2 v} \qquad (3\text{-}3)$$

Where:

V = volume of liquid (gallons or m^3)
D = pool diameter (m)
v = regression rate (m/sec)

As a pool of liquid combusts and the fuel is consumed, its depth decreases. The rate of burning, also called the regression rate (v), is defined as a volumetric loss of liquid per unit surface area of the pool per unit time, as illustrated by the following expression:

$$v = \frac{\dot{m}''}{\rho} \qquad (3\text{-}4)$$

Where:

$\dot{m}''$ = mass burning rate of fuel (kg/m^2-sec)
ρ = liquid fuel density (kg/m^3)

3.4 Flame Height

A flame is a body or stream of gaseous material involved in the combustion process, which emits radiant energy at specific wavelength bands depending on the combustion chemistry of the fuel

involved. In most cases, some portion of the emitted radiant energy is visible to the human eye as the glowing, gaseous portion of a fire, which is typically referred to as its flame.

The flame generally consists of a mixture of oxygen (air) and another gas, typically a combustible substance such as hydrogen, carbon monoxide, or a hydrocarbon. The brightest flames are not always the hottest. For example, hydrogen exhibits a high flame temperature. However it combines with oxygen when burning to form water, hydrogen has an almost invisible flame under ordinary circumstances. When hydrogen is absolutely pure and the air around it is completely free of dust, the hydrogen flame cannot be seen, even in dark a room.

In order to gain a better understanding of flames, a burning candle can be used as an example. When the candle is lit, the heat of the match melts the wax, which is carried up the wick and vaporized by the heat. As it is broken down by the heat, the vaporized wax combines with the oxygen of the surrounding air and produces heat and light in the form of a flame. The candle flame consists of three zones, which are easily distinguished. The innermost, nonluminous zone is composed of a gas/air mixture at a comparatively low temperature. In the second luminous zone, hydrogen (H_2) and carbon monoxide (CO) (produced by decomposition of the wax) react with oxygen to form combustion products, which include water (H_2O) and carbon dioxide (CO_2). In this zone, the temperature of the flame is 590 to 680 °C (1,094 to 1,256 °F), which is sufficiently intense to dissociate the gases in the flame and produce free carbon particles. These particles are heated to incandescence and then consumed. Outside the luminous zone is a third, invisible zone in which the remaining CO and H_2 are finally consumed. This zone is not visible to the human eye. Figure 3-4 shows the temperature distribution through the flame of a burning candle.

All combustible substances require a finite amount of oxygen for complete burning. (A flame can be sustained in an atmosphere of pure chlorine, but combustion can not complete.) In the burning of a candle or solids such as wood or coal, the surrounding atmosphere supplies this oxygen. In gas burners, air or pure oxygen is mixed with the gas at the base of the burner so that the carbon is consumed almost instantaneously at the mouth of the burner. This is an example of a premixed flame. The hottest portion of the flame of a Bunsen burner has a temperature of approximately 1,600 °C (2,912 °F). By contrast, the hottest portion of the oxygen-acetylene flames (torch) used for cutting and welding metals reaches approximately 3,500 °C (6,330 °F) because the increased oxygen in the case of the torch yields a significantly higher flame temperature. Any time the oxygen rate is increased (e.g., wind- or airflow-aided combustion or an oxygen-enriched atmosphere), the temperatures obtained will be higher than for the fuel combusting in a normal atmosphere.

A flame can be thought of in two distinct categories, including diffusion flame (Figure 3-5) and premixed flame (Figure 3-6). A diffusion flame is one in which the fuel and oxygen are transported (diffused) from opposite sides of the reaction zone (flame). A premixed flame is one in which the oxygen is mixed with the combustible gas by some mechanical device prior to combustion. Diffusion and premixed flames can be further classified as laminar or turbulent, depending on the steadiness of the flames produced. Figure 3-7 illustrates a laminar diffusion flame produced by a burning candle. (Laminar means that the flow streamlines are smooth and do not bounce around significantly.) Figure 3-8 illustrates examples of laminar premixed flames.

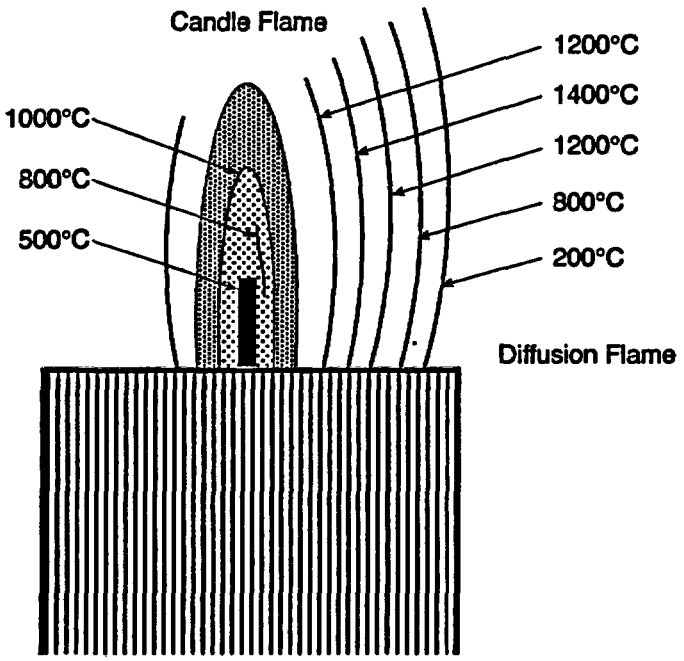

Figure 3-4 Temperature Distribution in the Flame of a Burning Candle

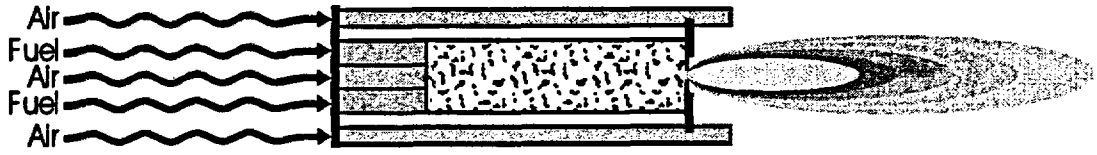

Diffusion Flame

Figure 3-5 Diffusion Flame

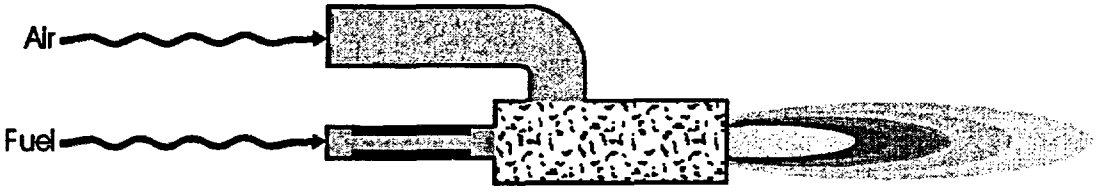

Pre-mixed Flame

Figure 3-6 Premixed Flame

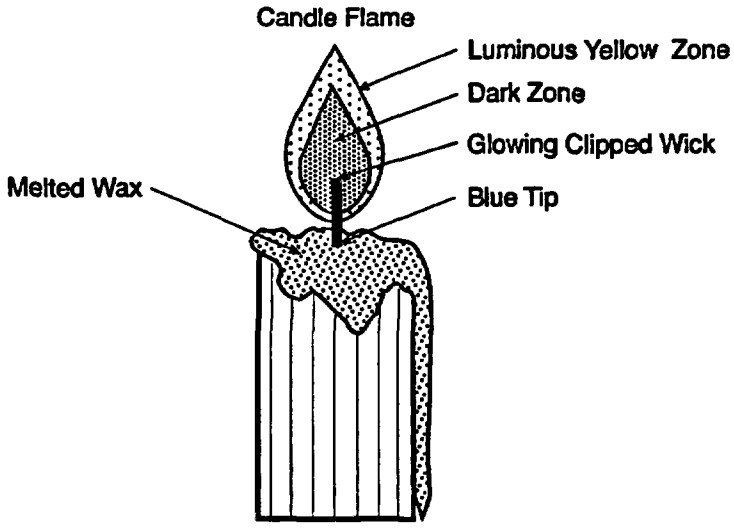

Figure 3-7 Laminar Diffusion Flame

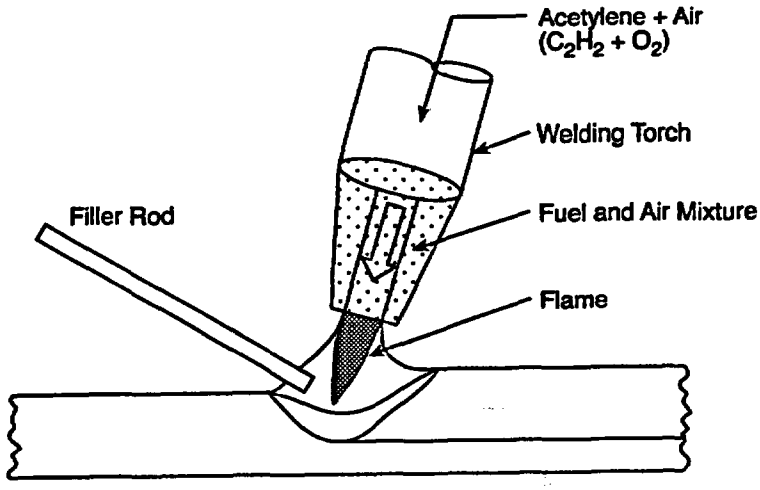

Oxy-Acetylene Flame

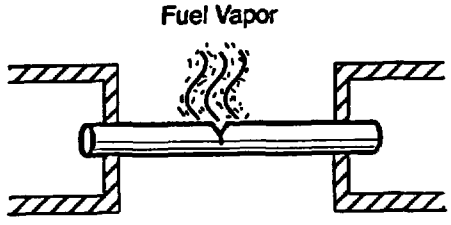

Gas Leaking Pipe Break

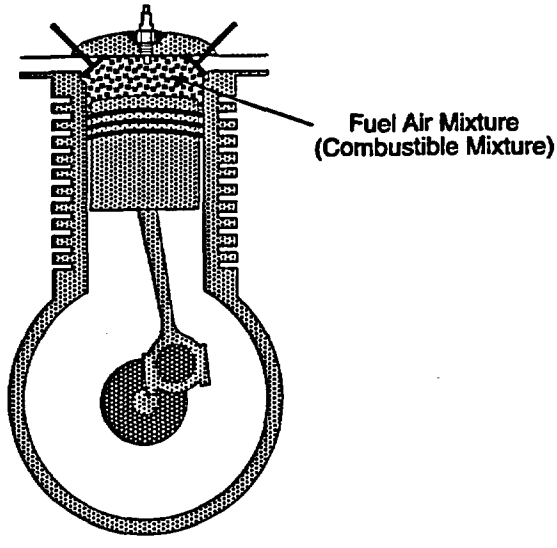

Internal Combustion (IC) Engine

Figure 3-8 Laminar Premixed Flames

Most turbulent premixed flames occur in engineered combustion systems, such as a boiler, furnace, process heater, gas burner, oxyacetylene torch, gasoline engine, or home gas cooking range. Most natural flaming processes produce diffusion flames, since no burner or other mechanical device exists to mix fuel and air. Common examples include a candle flame, a trash can fire, a hydrocarbon pool fire, or a forest fire.

3.4.1 Flame Extensions Under Ceiling

Most fire protection engineering (FPE) applications are concerned with the buoyant axisymmetric plume, which is caused by a turbulent diffusion flame above the burning fuel. When a flame impinges on an unconfined ceiling, the unburnt gases spread out radially and entrain air for combustion. A circular flame is then established under the ceiling, forming what is known as a ceiling jet. The ceiling configuration is very important for at least two reasons:

(1) Fire detection devices and automatic sprinklers are generally mounted just under the ceiling, and knowledge of the time of arrival and properties of a potential ceiling jet are crucial for predicting when the devices will be actuated.

(2) The downward thermal radiation from a ceiling jet, and from the hot ceiling itself, is a major factor in preheating and igniting combustible items that are not yet involved in the fire. This radiation heat transfer is very important in affecting the rate of fire spread. Figure 3-9 shows flame extensions under a smooth ceiling.

3.4.2 Flame Impingement

Flame that directly impacts a surface is called flame impingement. Direct flame impingement generally transfers large quantities of heat to the surface. Flame impingement occurs when gases from a buoyant stream rise above a localized area. The buoyant gas stream is generally turbulent except when the fire source is very small.

3.4.3 Flame Temperature

The pulsing behavior of a flame affects its temperature. The temperature varies across the width and height of the flame and the temperature at a fixed position will fluctuate widely, particularly around the edges and near the top of the flame. Therefore, any discussion of flame temperature usually involves reporting the centerline temperature or average flame temperature, which is determined by measuring the temperature at different times and different locations within the flame.

Table 3-5 summarizes the average flame temperature for a range of common fuel types. Notice that the flame temperature for flames involving gasoline is approximately the same as for flames involving wood. While these values may seem odd, they are explained by the different radiation properties of the flames produced by the respective materials.

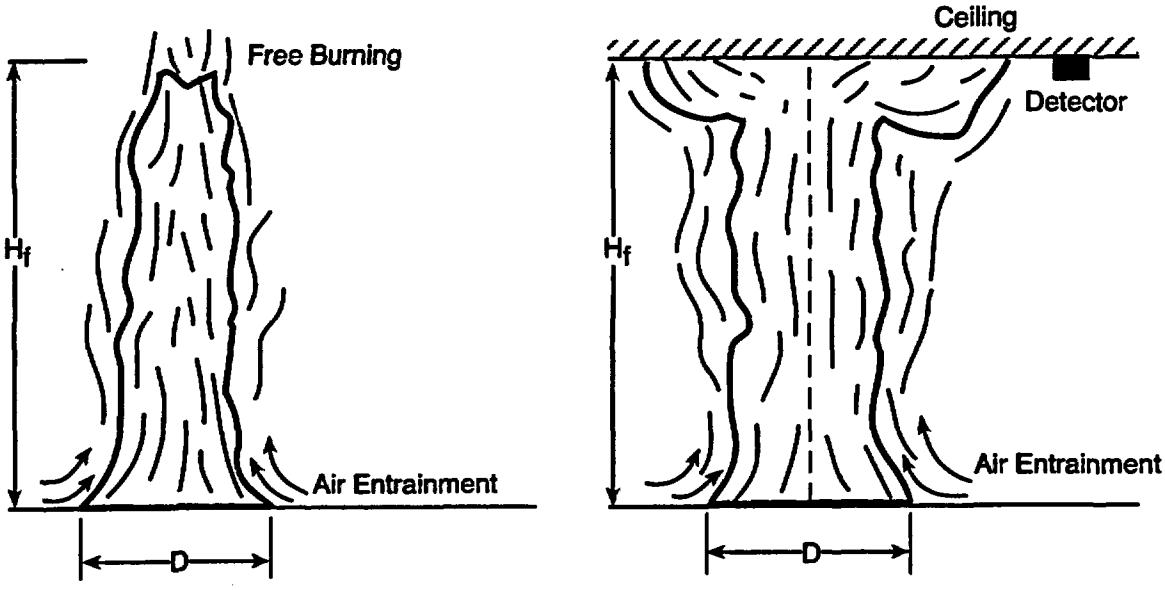

Figure 3-9 Flame Extensions with a Free-Burning Flame and Under a Smooth Ceiling

Table 3-5. Flame Temperatures of Selected Fuels	
Fuel Source (Flames)	Flame Temperature °C (°F)
Benzene	921 (1,690)
Gasoline	1,026 (1,879)
JP-4	927 (1,701)
Kerosene	990 (1,814)
Methanol	1,200 (2,192)
Wood	1,027 (1,881)

For convenience, we can subdivide the turbulent diffusion flames from potentially hazardous fires into flames in the open, and room fires as described in the following sections.

3.4.4 Flames Temperatures of Open Fires

The starting point for discussing the flame temperatures of open fires can be the work of the late Dr. McCaffrey (1979), who extensively studied temperatures in turbulent diffusion flames. Dr. McCaffrey used gas burners in a "pool fire" mode (i.e., non-premixed) and studied various characteristics of such fire plumes. He described three different regimes in such a fire plume:

(1) The continuous flame region begins slightly above the base of the fire, where the temperatures are constant and slightly below 900 °C (1,652 °F).

(2) The intermittent flame region is above the continuous flame region. Here the temperatures drop as a function of distance up the plume. The visible flame tips have a temperature of about 320 °C (608 °F).

(3) The thermal plume region is beyond the flame tips, where no more flames are visible and the temperature continues to drop as height increases away from the flame.

French researchers at the University of Poitiers recently made the same types of measurements (Audoin et al., 1995) and reported numerical values indistinguishable from McCaffreys (Cox and Chitty, 1980). The French researchers measured similar plumes and obtained very similar results of a temperature of 900 °C (1,652 °F) in the continuous flame region, and a temperature of around 340 °C (644 °F) at the flame tips.

Taking all of the above information into account, it appears that flame tip temperatures for turbulent diffusion flames should be estimated as being around 320 to 400 °C (608 to 752 °F). For small flames (less than about 1 m base diameter), continuous flame region temperatures of around 900 °C (1,652 °F) should be expected. For large pools, the latter value can rise to 1,100 to 1,200 °C (2,012 to 2,192 °F).

3.4.5 Flame Temperatures in Room Fires

The fire science community generally agrees that flashover is reached when the average upper gas temperature in the room exceeds 600 °C (1,112 °F). There will be zones with flame temperature of 900 °C (1,652 °F), but wide spatial variations will be seen. Of interest, however, is the peak fire temperature normally associated with room fires. This peak value is governed by ventilation and fuel supply characteristics. As a result of these variables, peak fire temperature values will form a wide frequency distribution (Babrauskas and Williamson, 1979). The maximum value is around 1,200 °C (2,192 °F), although a typical post-flashover room fire will more commonly have a peak temperature of 900 to 1,000 °C (1,652 to 1,832 °F). The time-temperature curve (TTC) for the standard fire endurance test (ASTM E119) extends to 1,260 °C (2,300 °F), as is reached in 8 hours. Note that no jurisdiction demands fire endurance periods of more than 4 hours, at which time the curve only reaches 1,093 °C (1,999 °F).

The peak temperatures expected in room fires are slightly greater than those found in free-burning open flames. Heat losses from the flame determine how far below the adiabatic flame temperature the actual temperature will be[2]. When a flame is far away from any walls and does not heat the enclosure, it radiates to surroundings which are typically at a starting temperature of 20 °C (68 °F). If the flame is large enough, or the room small enough, for the walls to heat up substantially, the flame exchanges radiation with a body that is several hundred degrees Celsius; the consequence is smaller heat losses leading to a higher flame temperature.

3.4.6 Adiabatic Flame Temperature

Adiabatic means without losing heat. Thus, adiabatic flame temperatures would be achieved in a (theoretical) combustion system in which there are no heat losses and, hence, no radiation losses from the flame. Because this cannot be achieved in practice (given the inefficiencies of combustion) and is never achieved in a fire situation, adiabatic flame temperatures are calculated values, which are usually given in textbooks.

The amount of energy or heat released from the combustion reaction of fuel and air (or oxygen) is the heat of combustion. If all of the energy released by this chemical reaction were used to raise the temperature of the products (CO_2, H_2O, and N_2) with no heat losses, the resultant temperature would be the adiabatic flame temperature, which represents the maximum possible theoretical temperature for a particular fuel/oxidant combustion. Table 3-6 gives adiabatic flame temperatures for a variety of fuels. Remember from the earlier discussion, a given fuel will always have a higher adiabatic flame temperature when burned in pure oxygen than it will when burned in normal air (21-percent oxygen). This is because the heat of combustion must be used to raise the temperature of the nitrogen in air and, therefore, does not contribute to the energy release.

[2]Adiabatic flame temperature is defined as the flame temperature with no heat loss.

Table 3-6. Adiabatic Flame Temperatures of Selected Fuels	
Fuel Source	Adiabatic Flame Temperature K (°C) (°F)
Hydrogen (H_2)	2,525 (2,252) (4,085)
Carbon Monoxide (CO)	2,660 (2,387) (4,329)
Methane (CH_4)	1,446 (1,173) (2,143)
Ethane (C_2H_6)	1,502 (1,129) (2,064)
Ethylene (C_2H_4)	2,565 (2,289) (4,152)
Acetylene (C_2H_2)	2,910 (1,281) (2,338)
Propane (C_3H_8)	1,554 (2,117) (3,843)
Propylene (C_3H_6)	2,505 (2,232) (4,050)
n-Butane (n-C_4H_{10})	1,612 (1,339) (2,442)
n-Octane (n-C_8H_8)	1,632 (1,359) (2,478)
n-Heptane	1,692 (1,419) (2,586)
n-Pentane	1,564 (1,291) (2,356)

The energy required to raise the temperature of the combustion products is determined by the mass of the products, their heat capacities, and the difference between the initial and final temperatures. Specific heat is defined as the amount of energy required to raise the temperature of a given amount of product 1 °C (or K).

3.4.7 Temperatures of Objects

It is common practice for investigators to assume that an object next to a flame of a certain temperature will also be of that same temperature. This assumption is not entirely accurate. If a flame is exchanging heat with an object that was initially at room temperature, it will take a finite amount of time for the temperature of that object to increase to a value similar to that of the flame. Exactly how long this will take is a question for the study of heat transfer, which is usually presented to engineering students over several semesters of university classes. It should be clear that simple rules-of-thumb for first order approximations would not be expected. Here, we will merely point out that the rate at which target objects gain heat is largely governed by their, size, density, and thermal conductivity. Small, low-density, low-conductivity objects will heat much faster than massive, dense, highly conductive objects.

3.4.8 Flame Height Calculations

The height of a flame is a significant indicator of the hazard posed by the flame. Flame height directly relates to flame heat transfer and the propensity of the flame to impact surrounding objects.

As a plume of hot gases rises above a flame, the temperature, velocity, and width of the plume changes as the plume mixes with its surroundings. The size (height) and temperature of the flame are important in estimating the ignition of adjacent combustibles. Figure 3-10 shows a characteristic sketch of the flame height fluctuations associated with the highly intermittent pulsing structure of a flame, particularly along its perimeter and near its top. This intermittency is driven largely by the turbulent mixing of air and subsequent combustion, and the pulsing behavior, in turns affects the temperature of the flame. Thus, as previously discussed, the temperature at a fixed position fluctuates widely, particularly around the edges and near the top of the flame. This is why flame temperature is usually reported in terms of the centerline temperature or average flame temperature.

Researchers define flame height as the height at which the flame is observed at least 50-percent of the time. Above the fuel source, the flaming region is characterized by high temperature and is generally luminous. Flames from pool fires fluctuate periodically so that the tip of the flame is significantly different from the length of the continuous combustion (or luminous) region. Consequently, flame height has been defined by various criteria in order to correlate data.

The flame height is an important quantitative characteristic of a fire and may affect fire detection and suppression system design, fire heating of building structures, smoke filling rates, and fire ventilation. Flame height typically depends on whether the flame is laminar or turbulent. In general laminar flames are short, while turbulent flames are tall. The following two correlations are widely used to determine the flame height of pool fires (Heskestad, 1995 and Thomas, 1962) respectively:

$$H_f = 0.235\dot{Q}^{\frac{2}{5}} - 1.02D \qquad (3\text{-}6)$$

Where:

H_f = flame height (m)
$\dot{Q}$ = heat release rate of the fire (kW)
D = diameter of the fire (m)

$$H_f = 42D\left(\frac{\dot{m}''}{\rho_a\sqrt{gD}}\right)^{0.61} \qquad (3\text{-}7)$$

Where:

H_f = flame height (m)
D = diameter of the fire (m)
$\dot{m}''$ = burning or mass loss rate per unit area per unit time (kg/m^2-sec)
ρ_a = ambient air density (kg/m^3)
g = gravitational acceleration (m/sec^2)

The above correlations can also be used to determine the length of the flame extension along the ceiling and to estimate radiative heat transfer to objects in the enclosure.

The HRR of the fire can be determined by laboratory or field testing. In the absence of experimental data, the maximum HRR for the fire $(\dot{Q})$ is given by the following equation:

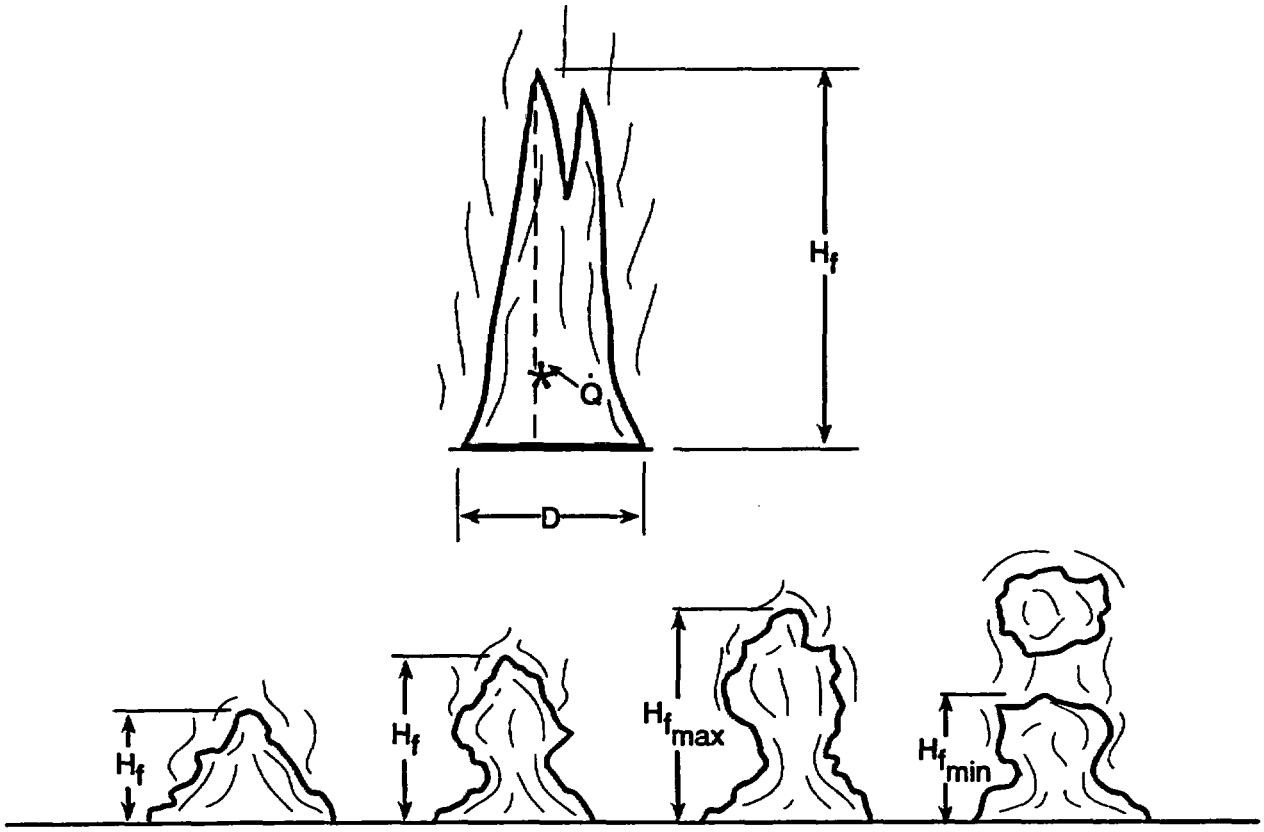

Figure 3-10 Characteristics of Flame Height Fluctuations

$$\dot{Q} = \dot{m}''\Delta H_{c,eff} A_f \qquad (3\text{-}8)$$

Where:

$\dot{m}''$ = burning or mass loss rate per unit area per unit time (kg/m^2-sec)
$\Delta H_{c,eff}$ = effective heat of combustion (kJ/kg)
A_f = horizontal burning area of the fuel (m^2)

For non-circular pools, the effective diameter is defined as the diameter of a circular pool with an area equal to the actual pool area given by the following equation:

$$D = \sqrt{\frac{4A_f}{\pi}} \qquad (3\text{-}9)$$

Where:

A_f is the surface area of the non-circular pool

3.5 Assumptions and Limitations

The methods discussed in this chapter are subject to several assumptions and limitations that apply to HRR:

(1) The pool fire is burning in the open and is characterized by instantaneous, complete involvement of the flammable/combustible liquid.

(2) There is no fire growth period. (Real liquid pool fires grow very quickly, and it is realistic to assume that the pool fire instantaneously reaches its maximum HRR.)

In addition, the following assumptions and limitations apply to burning duration:

(1) The pool is circular or nearly circular and contains a fixed mass or volume of flammable/combustible liquid. The mass or volume of any spill with a non-circular circumference must be approximated as a circular measurement. For example an accidental fuel is ignited in a pump room and causes cable trays to be exposed to a pool fire. The spill area is a rectangular dike with dimensions of 4-ft x 5-ft.
The equivalent diameter of the pool fire is given by Equation 3-9:

$$D = \sqrt{\frac{4A_f}{\pi}}$$

Where:

A_f = the surface area of noncircular pool

Therefore, the equivalent diameter of the non-circular pool is as follows:

$$D = \sqrt{\frac{4x20}{\pi}} = 5\text{ft}$$

(2) There is no fire growth period. (As stated above, real liquid pool fires grow very quickly, and it is realistic to assume that the pool fire instantaneously reaches its maximum HRR.)

In addition, the following assumptions and limitations apply to flame height:

(1) The flame height correlation described in this chapter was developed for horizontal pool fire sources in the center or away from the center of the compartment. The turbulent diffusion flames produced by fires burning near or close to a wall or in a corner configuration of a compartment effect the spread of the fire. The flame height correlations of fires burning near walls and corners is presented in Chapter 4.

(2) The size of the fire (flame height) depends on the diameter of the fuel and the HRR attributable to the combustion.

(3) This correlation is developed for two-dimensional sources (primarily pool fires) and this method assumes that the pool is circular or nearly circular.

(4) There is no fire growth period. (As stated above, real liquid pool fires grow very quickly, and it is realistic to assume that the pool fire instantaneously reaches its maximum HRR.)

3.6 Required Input for Spreadsheet Calculations

The user must obtain the following values before attempting a calculation using the characteristics of liquid pool fire spreadsheet:

(1) fuel spill volume (gallons)

(2) fuel spill area or dike area (ft^2)

(3) fuel type

3.7 Cautions

(1) Use (HRR_Flame_Height_Burning_Duration_Calculation.xls) spreadsheet on the CD-ROM.

(2) Make sure to enter the input parameters in the correct units.

3.8 Summary

An engineering approach to pool fire burning characterization requires a classification according to the dominant heat transfer mechanism, which can be expressed as being dependent on pool diameter. The pool shall include fires resulting from spilled liquids, fires in diked or curbed areas, and fires in open areas. These fires will be typically considered to be circular.

Estimating the burning duration of a pool fire involves the following steps:

(1) Determine the regression rate of the pool fire.

(2) Calculate the equivalent diameter of the pool fire.

(3) Calculate the burning duration of the pool fire.

The flame height is generally defined as the height at which (or above which) the flame is observed at least 50-percent of the time. Visual observations tend to yield slight overestimations of flame height.

Estimating the flame height from a pool fire involves the following steps:

(1) Determine the HRR of the pool fire.

(2) Calculate the equivalent diameter of the pool fire.

(3) Determine the height of the pool fire flame.

3.9 References

ASTM E1354-97, "Standard Test Method for Heat and Visible Smoke Release Rates for Materials and Products Using an Oxygen Consumption Calorimeter," ASTM Fire Test Standard, Fifth Edition, American Society of Testing and Materials, West Conshohocken, Pennsylvania, pp. 1097–1114, 1999.

Audoin, L., et. al., "Average Centerline Temperatures of a Buoyant Pool Fire Obtained by Image Processing of Video Recordings," *Fire Safety Journal*, Volume 24, pp. 107–130, 1995.

Babrauskas, V., at. al., "Fire Performance of Wire and Cable: Reaction-to-fire Tests A Critical Review of the Existing Methods of New Concepts," NIST Technical Note 1291, U.S. Department of Commerce, National Institute of Standards and Technology (NIST), Building and Fire Research Laboratory (BFRL), Gaithersburg, Maryland, 1991.

Babrauskas, V. "Estimating Large Pool Fire Burning Rates," *Fire Technology*, November, pp. 251–261, 1983.

Babrauskas, V., "Free Burning Fires," Fire Safety Journal, Volume, 11, Nos. 1 & 2, pp. 33–51, July/September 1986.

Babrauskas, V., "Burning Rates," Section 3, Chapter 3-1, *SFPE Handbook of Fire Protection Engineering*, 2nd Edition, P.J. DiNenno, Editor-in-Chief, National Fire Protection Association, Quincy, Massachusetts, 1995.

Babrauskas, V., and R.B. Williamson, "Post-Flashover Compartment Fires," *Fire and Materials*, Volume 2, pp. 39–53: 1978, and Volume 3, pp. 1–7, 1979.

Chavez, J.M., "An Experimental Investigation of Internally Ignited Fires in Nuclear Power Plant Control Cabinets: Part 1 Cabinet Effects Tests," NUREG/CR 4527, U.S. Nuclear Regulatory Commission, Washington, DC, April 1987.

Cox, G., and R. Chitty, "A Study of the Deterministic Properties of Unbounded Fire Plumes," *Combustion and Flame*, Volume 39, pp. 191–209, 1980.

Heskestad, G., "Fire Plumes," Section 2, Chapter 2-2, *SFPE Handbook of Fire Protection Engineering*, 2nd Edition, P.J. DiNenno, Editor-in-Chief, National Fire Protection Association, Quincy, Massachusetts, 1995.

Karlsson, B., and J.G. Quintiere, Chapter 3, "Energy Release Rates," *Enclosure Fire Dynamics*. CRC Press LLC, New York, pp. 25–46, 1999.

Lee, B.T., "Heat Release Rate Characteristics of Some Combustibles Fuel Sources in Nuclear Power Plants," NBSIR 85-3195, U.S. Department of Commerce, National Bureau of Standards (NBS), Washington, DC, July 1985.

McCaffrey, B.J., "Purely Buoyant Diffusion Flames: Some Experimental Results," NBSIR 79-1910, National Bureau of Standards (NBS), Washington, DC, 1979.

Nowlen, S.P., "Heat and Mass Release for Some Transient Fuel Sources Fires: A Test Report," NUREG/CR-4680, U.S. Nuclear Regulatory Commission, Washington, DC, October 1986.

Nowlen, S.P., "Quantitative Data on the Fire Behavior of Combustible Materials Found in Nuclear Power Plants: A Literature Review," NUREG/CR-4679, U.S. Nuclear Regulatory Commission, Washington, DC, February 1987.

Thomas, P.H., "The Size of Flames from Natural Fires," Nine Symposium (International) on Combustion, The Combustion Institute, Pittsburgh, Pennsylvania, pp. 844–859, 1962.

3.10 Additional Readings

Heskestad, G., "Flame Heights of Fuel Arrays with Combustion in Depth," Proceedings of the Fifth International Symposium on Fire Safety Science, International Association of Fire Safety Science, pp. 427–438, 1997.

Ingason, H., "Two Dimensional Rack Storage Fires," Proceedings of the Fourth International Symposium on Fire Safety Science, International Association of Fire Safety Science, pp. 1209–1220, 1994.

Ingason, H. and J. de Ris, "Flame Heat Transfer in Storage Geometries," *Fire Safety Journal*, 1997.

McCaffrey, B.J., "Flame Height," Section 2, Chapter 2-1, SFPE Handbook of Fire Protection Engineering, 2nd Edition, P.J. DiNenno, Editor-in-Chief, National Fire Protection Association, Quincy, Massachusetts,1995.

Mudan, K.S., and P.A. Croce, "Fire Hazard Calculations for Large Open Hydrogen Fires," Section 3, Chapter 3-11, SFPE Handbook of Fire Protection Engineering, 2nd Edition, P.J. DiNenno, Editor-in-Chief, National Fire Protection Association, Quincy, Massachusetts, 1995.

Smith, D.A., and G. Cox, "Major Chemical Species in Turbulent Diffusion Flames," *Combustion and Flame*, Volume 91, pp. 226–238, 1992.

Yuan, L.M., and G. Cox, "An Experimental Study of Some Line Fires," *Fire Safety Journal*, Volume 27, pp. 123–139, 1997.

This page intentionally left blank.

3.11 Problems

Example Problem 3.10-1

Problem Statement

A pool fire scenario arises from a breach (leak or rupture) in an auxiliary cooling water pump oil tank. This event allows the fuel contents of the pump to spill spread over the compartment floor. A 5 gallon, 9.0 ft^2 surface area spill of flammable liquid (lubricating oil) leads to consideration of a pool fire in a compartment with a concrete floor. The fuel is ignited and spreads rapidly over the surface, reaching steady burning almost instantly. Compute the HRR, burning duration, and flame height of the pool fire. The dimensions of the compartment are 15 ft wide x 15 ft deep x 10 ft heigh. The cable tray is located 8 ft above the pool fire. Determine whether the flame will impinge upon the cable tray. Assume instantaneous and complete involvement of the liquid pool with no fire growth and no intervention by the plant fire department or automatic suppression systems.

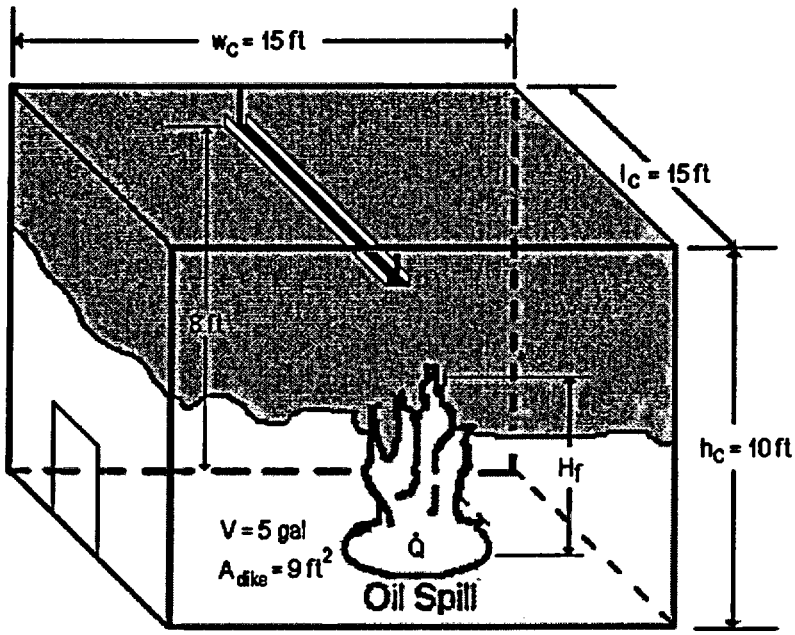

Example Problem 3-1: Compartment with Pool Fire

Solution

Purpose:

(1) Determine the Heat Release Rate (HRR) of the fire source.
(2) Determine the burning duration of the pool fire.
(3) Determine the flame height of the pool fire .
(4) Determine whether the flame will impinge upon the cable tray.

Assumptions:

(1) Instantaneous and complete involvement of the liquid in the pool fire
(2) The pool fire is burning in the open
(3) No fire growth period (instantaneous HRR_{max})
(4) The pool is circular or nearly circular and contains a fixed mass of liquid volume
(5) The fire is located at the center of the compartment or away from the walls

Spreadsheet (FDT[s]) Information:

Use the following FDT[s]:

(a) HRR_Flame_Height_Burning_Duration_Calculations.xls

FDT[s] Input Parameter:

-Fuel spill volume (V) = 5 gallons

-Fuel Spill Area or Dike Area (A_{dike}) = 9.0 ft^2

-Select Fuel Type: **Lube Oil**

Results*

Heat Release Rate (HRR) $\dot{Q}$ kW (Btu/sec)	Burning Duration (t_b) (min.)	Pool Fire Flame Height (H_f) m (ft)	
		Method of Heskestad	Method of Thomas
1,500 (1422)	7.5	3.40 (11.0)	2.47 (9.0)

*see spreadsheet on next page

Both methods for pool fire flame height estimation show that pool fire flame will impinge upon the cable tray.

Spreadsheet Calculations

CHAPTER 3 - METHOD OF ESTIMATING THE HEAT RELEASE RATE, BURNING DURATION, AND FLAME HEIGHT FOR A LIQUID POOL FIRE

The following calculations estimate the heat release rate, burning duration, and flame height for liquid pool fire.
Parameters should be specified ONLY IN THE YELLOW INPUT PARAMETER BOXES.
All subsequent output values are calculated by the spreadsheet and based on values specified in the input parameters. This spreadsheet is protected and secure to avoid errors due to a wrong entry in a cell(s).
The chapter in the guide should be read before an analysis is made.

INPUT PARAMETERS

Fuel Spill Volume (V)	5.00	gallons	0.0189 m^3
Fuel Spill Area or Dike Area (A_{dike})	9.00	ft^2	0.836 m^2
Mass Burning Rate of Fuel (m'')	0.039	kg/m^2-sec	
Effective Heat of Combustion of Fuel ($\Delta H_{c,eff}$)	46000	kJ/kg	
Fuel Density (ρ)	760	kg/m^3	
Gravitational Acceleration (g)	9.81	m/sec^2	
Ambient Air Density (ρ_a)	1.20	kg/m^3	

THERMAL PROPERTIES DATA

Select Fuel Type
Lube Oil
Scroll to desired fuel type
Click on selection

BURNING RATE DATA FOR LIQUID HYDROCARBON FUELS

Fuel	Mass Burning Rate m'' (kg/m^2-sec)	Heat of Combustion $\Delta H_{c,eff}$ (kJ/kg)	Density ρ (kg/m^3)
Methanol	0.017	20,000	796
Ethanol	0.015	26,800	794
Butane	0.078	45,700	573
Benzene	0.085	40,100	874
Hexane	0.074	44,700	650
Heptane	0.101	44,600	675
Xylene	0.09	40,800	870
Acetone	0.041	25,800	791
Dioxane	0.018	26,200	1035
Diethy Ether	0.085	34,200	714
Benzine	0.048	44,700	740
Gasoline	0.055	43,700	740
Kerosine	0.039	43,200	820
Diesel	0.045	44,400	918
JP-4	0.051	43,500	760
JP-5	0.054	43,000	810
Transformer Oil, Hydrocarbon	0.039	46,000	760
Fuel Oil, Heavy	0.035	39,700	970
Crude Oil	0.0335	42,600	855
Lube Oil	0.039	46,000	760

Reference: *SFPE Handbook of Fire Protection Engineering*, 2nd Edition, 1995, Page 3-2.

ESTIMATING POOL FIRE HEAT RELEASE RATE

Reference: *SFPE Handbook of Fire Protection Engineering*, 2nd Edition, 1995, Page 3-4.

$$Q = m''\Delta H_{c,eff} A_f$$

Where Q = pool fire heat release rate (kW)
m'' = mass burning rate of fuel per unit surface area (kg/m^2-sec)
$\Delta H_{c,eff}$ = effective heat of combustion of fuel (kJ/kg)
$A_f = A_{dike}$ = surface area of pool fire (area involved in vaporization) (m^2)

Heat Release Rate Calculation
$Q = m''\Delta H_c A_f$

(Liquids with relatively high flash point, like transformer oil, require localized heating to achieve ignition)

Q = 1500.01 kW 1421.74 BTU/sec ANSWER

ESTIMATING POOL FIRE BURNING DURATION

Reference: *SFPE Handbook of Fire Protection Engineering, 2nd Edition, 1995, Page 3-107.*

$t_b = 4V/\pi D^2 v$

Where t_b = burning duration of pool fire (sec)
V = volume of liquid (m^3)
D = pool diameter (m)
v = regression rate (m/sec)

Pool Fire Diameter Calculation

$A_{fuel} = \pi D^2/4$

$D = \sqrt{(4A_{fuel}/\pi)}$

$D = 1.032$ m

Calculation for Regression Rate

$v = m''/\rho$

Where m'' = mass burning rate of fuel (kg/m^2-sec)
ρ = liquid fuel density (kg/m^3)

$v = 0.000051$ m/sec

Burning Duration Calculation

$t_b = 4V/\pi D^2 v$

$t_b =$ 441.12 sec 7.35 minutes **ANSWER**

Note that a liquid pool fire with a given amount of fuel can burn for long periods of time over small area or for short periods of time over a large area.

ESTIMATING POOL FIRE FLAME HEIGHT
METHOD OF HESKESTAD

Reference: *SFPE Handbook of Fire Protection Engineering, 2nd Edition, 1995, Page 3-10.*

$H_f = 0.235\, Q^{2/5} - 1.02\, D$

Where H_f = pool fire flame height (m)
Q = pool fire heat release rate (kW)
D = pool fire diameter (m)

Pool Fire Flame Height Calculation

$H_f = 0.235\, Q^{2/5} - 1.02\, D$

$H_f =$ 3.39 m 10.53 ft **ANSWER**

METHOD OF THOMAS

Reference: *SFPE Handbook of Fire Protection Engineering, 2nd Edition, 1995, Page 3-20.*

$H_f = 42\, D\, (m''/\rho_o\, v(g\, D))^{0.61}$

Where H_f = pool fire flame height (m)
m'' = mass burning rate of fuel per unit surface area (kg/m^2-sec)
ρ_o = ambient air density (kg/m^3)
D = pool fire diameter (m)
g = gravitational acceleration (m/sec^2)

Pool Fire Flame Height Calculation

$H_f = 42\, D\, (m''/\rho_o\, v(g\, D))^{0.61}$

$H_f =$ 2.65 m 8.69 ft **ANSWER**

NOTE

The above calculations are based on principles developed in the SFPE Handbook of Fire Protection Engineering, 2nd Edition, 1995.
Calculations are based on certain assumptions and have inherent limitations. The results of such calculations may or may not have reasonable predictive capabilities for a given situation, and should only be interpreted by an informed user.
Although each calculation in the spreadsheet has been verified with the results of hand calculation, there is no absolute guarantee of the accuracy of these calculations.
Any questions, comments, concerns, and suggestions, or to report an error(s) in the spreadsheets, please send an email to nxi@nrc.gov.

NRR

Office of Nuclear Reactor Regulation

Example Problem 3.10-2

Problem Statement

A standby diesel generator (SBDG) room in a power plant has a 3-gallon spill of diesel fuel over a 1 ft^2 diked area. This event allows the diesel fuel to form a pool. The diesel is ignited and fire spreads rapidly over the surface, reaching steady burning almost instantly. Compute the HRR, burning duration, and flame height of the pool fire. The dimensions of the compartment are 10 ft wide x 12 ft deep x 12 ft high. The cable tray is located 10 ft above the pool fire. Determine whether flame will impinge upon the cable tray. Also determine the minimum area required of the pool fire for the flame to impinge upon the cable tray. Assume instantaneous, complete involvement of the liquid pool with no fire growth and no intervention by plant fire department or automatic suppression.

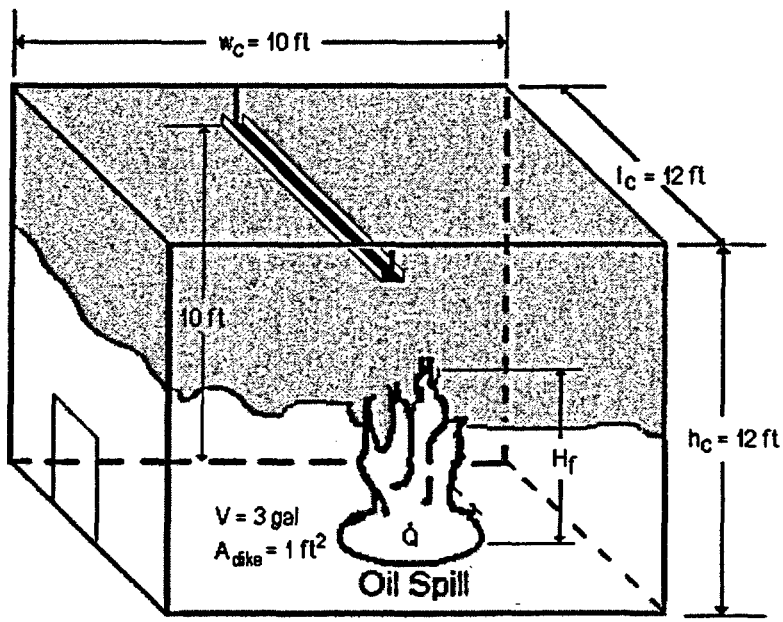

Example Problem 3-2: Compartment with Pool Fire

Solution

Purpose:

(1) Determine the Heat Release Rate (HRR) of the fire source.
(2) Determine the burning duration of the pool fire.
(3) Determine the flame height of the pool fire.
(4) Determine whether the flame will impinge upon the cable tray.
(5) Determine the minimum dike area required for the flame to impinge upon the cable tray.

Assumptions:

(1) Instantaneous and complete involvement of the liquid in the pool fire
(2) The pool fire is burning in the open
(3) No fire growth period (instantaneous HRR_{max})
(4) The pool is circular or nearly circular and contains a fixed mass of liquid volume
(5) The fire is located at the center of the compartment or away from the walls

Spreadsheet (FDT[s]) Information:

Use the following FDT[s]:

(a) HRR_Flame_Height_Burning_Duration_Calculations.xls

FDTs Input Parameter:

-Fuel spill volume (V) = 3 gallons

-Fuel Spill Area or Dike Area (A_{dike}) = 1.0 ft^2

-Select Fuel Type: **Diesel**

Results*

Heat Release Rate (HRR) $\dot{Q}$ kW (Btu/sec)	Burning Duration (t_b) (min.)	Pool Fire Flame Height (H_f) m (ft)	
		Method of Heskestad	Method of Thomas
186 (176)	42.5	1.52 (5.0)	1.4 (4.5)

*see spreadsheet on next page

Both methods for pool fire flame height estimation show that pool fire flame will not impinge the cable tray.

To determine the minimum dike area required for the flame to impinge upon the cable tray, we have to substitute different values of area on the spreadsheet until obtain a flame height value of 10 ft (cable tray height). We just need to keep the input values used for the previous results and change only the area value. This trial and error procedure is shown in the following table.

Trial	A_{dike} (ft^2)	Pool Fire Flame Height (H_f) m (ft)	
		Method of Heskestad	Method of Thomas
1	4	2.6 (8.5)	2.13 (7.0)
2	5	2.9 (9.5)	2.45 (8.0)
3	6	3.04 (10.0)	2.6 (8.5)
4	6.1	3.04 (10.0)	2.6 (8.5)

To be conservative, we are going to consider the method that get first the 10 ft flame height. The method of Heskestad tells that the pool fire flame will impinge upon the cable tray if the dike area is 6.1 ft^2. For practical purpose, we could say that a spill pool area around 5–6 ft^2 would be a risk for the cable tray integrity.

Spreadsheet Calculations

CHAPTER 3 - METHOD OF ESTIMATING THE HEAT RELEASE RATE, BURNING DURATION, AND FLAME HEIGHT FOR A LIQUID POOL FIRE

The following calculations estimate the heat release rate, burning duration, and flame height for liquid pool fire.
Parameters should be specified ONLY IN THE YELLOW INPUT PARAMETER BOXES.
All subsequent output values are calculated by the spreadsheet and based on values specified in the input parameters. This spreadsheet is protected and secure to avoid errors due to a wrong entry in a cell(s).
The chapter in the guide should be read before an analysis is made.

INPUT PARAMETERS

Fuel Spill Volume (V)	3.00	gallons	0.0114 m^3
Fuel Spill Area or Dike Area (A_{dike})	1.00	ft^2	0.093 m^2
Mass Burning Rate of Fuel (m'')	0.045	kg/m^2-sec	
Effective Heat of Combustion of Fuel ($\Delta H_{c,eff}$)	44400	kJ/kg	
Fuel Density (ρ)	918	kg/m^3	
Gravitational Acceleration (g)	9.81	m/sec^2	
Ambient Air Density (ρ_a)	1.20	kg/m^3	

THERMAL PROPERTIES DATA

Select Fuel Type

Diesel

Scroll to desired fuel type then Click on selection

BURNING RATE DATA FOR LIQUID HYDROCARBON FUELS

Fuel	Mass Burning Rate m'' (kg/m^2-sec)	Heat of Combustion $\Delta H_{c,eff}$ (kJ/kg)	Density ρ (kg/m^3)
Methanol	0.017	20,000	796
Ethanol	0.015	26,800	794
Butane	0.078	45,700	573
Benzene	0.085	40,100	874
Hexane	0.074	44,700	650
Heptane	0.101	44,600	675
Xylene	0.09	40,800	870
Acetone	0.041	25,800	791
Dioxane	0.018	26,200	1035
Diethy Ether	0.085	34,200	714
Benzine	0.048	44,700	740
Gasoline	0.055	43,700	740
Kerosine	0.039	43,200	820
Diesel	0.045	44,400	918
JP-4	0.051	43,500	760
JP-5	0.054	43,000	810
Transformer Oil, Hydrocarbon	0.039	46,000	760
Fuel Oil, Heavy	0.035	39,700	970
Crude Oil	0.0335	42,600	855
Lube Oil	0.039	46,000	760

Reference: *SFPE Handbook of Fire Protection Engineering*, 2nd Edition, 1995, Page 3-2.

ESTIMATING POOL FIRE HEAT RELEASE RATE

Reference: *SFPE Handbook of Fire Protection Engineering*, 2nd Edition, 1995, Page 3-4.

$$Q = m''\Delta H_{c,eff} A_f$$

Where Q = pool fire heat release rate (kW)
m'' = mass burning rate of fuel per unit surface area (kg/m^2-sec)
$\Delta H_{c,eff}$ = effective heat of combustion of fuel (kJ/kg)
$A_f = A_{dike}$ = surface area of pool fire (area involved in vaporization) (m^2)

Heat Release Rate Calculation
$Q = m''\Delta H_c A_f$

(Liquids with relatively high flash point, like transformer oil, require localized heating to achieve ignition)

Q = 185.62 kW 175.93 BTU/sec ANSWER

ESTIMATING POOL FIRE BURNING DURATION

Reference: *SFPE Handbook of Fire Protection Engineering*, 2nd Edition, 1995, Page 3-197.

$t_b = 4V/\pi D^2 v$

Where t_b = burning duration of pool fire (sec)
V = volume of liquid (m^3)
D = pool diameter (m)
v = regression rate (m/sec)

Pool Fire Diameter Calculation

$A_{dike} = \pi D^2/4$

$D = v(4A_{dike}/\pi)$

$D =$ 0.344 m

Calculation for Regression Rate

$v = m''/\rho$

Where m'' = mass burning rate of fuel (kg/m^2-sec)
ρ = liquid fuel density (kg/m^3)

$v =$ 0.000049 m/sec

Burning Duration Calculation

$t_b = 4V/\pi D^2 v$

$t_b =$ 2493.65 sec 41.58 minutes **ANSWER**

Note that a liquid pool fire with a given amount of fuel can burn for long periods of time over small area or for short periods of time over a large area.

ESTIMATING POOL FIRE FLAME HEIGHT

METHOD OF HESKESTAD

Reference: *SFPE Handbook of Fire Protection Engineering*, 2nd Edition, 1995, Page 3-10.

$H_f = 0.235\ Q^{2/5} - 1.02\ D$

Where H_f = pool fire flame height (m)
Q = pool fire heat release rate (kW)
D = pool fire diameter (m)

Pool Fire Flame Height Calculation

$H_f = 0.235\ Q^{2/5} - 1.02\ D$

$H_f =$ 1.55 m 5.08 ft **ANSWER**

METHOD OF THOMAS

Reference: *SFPE Handbook of Fire Protection Engineering*, 2nd Edition, 1995, Page 3-204.

$H_f = 42\ D\ (m''/\rho_a\ v(g\ D))^{0.61}$

Where H_f = pool fire flame height (m)
m'' = mass burning rate of fuel per unit surface area (kg/m^2-sec)
ρ_a = ambient air density (kg/m^3)
D = pool fire diameter (m)
g = gravitational acceleration (m/sec^2)

Pool Fire Flame Height Calculation

$H_f = 42\ D\ (m''/\rho_a\ v(g\ D))^{0.61}$

$H_f =$ 1.35 m 4.41 ft **ANSWER**

NOTE

The above calculations are based on principles developed in the SFPE Handbook of Fire Protection Engineering, 2nd Edition, 1995.
Calculations are based on certain assumptions and have inherent limitations. The results of such calculations may or may not have reasonable predictive capabilities for a given situation, and should only be interpreted by an informed user.
Although each calculation in the spreadsheet has been verified with the results of hand calculation, there is no absolute guarantee of the accuracy of these calculations.
Any questions, comments, concerns, and suggestions, or to report an error(s) in the spreadsheets, please send an email to nxi@nrc.gov.

NRR
Office of Nuclear Reactor Regulation

Example Problem 3.10-3

Problem Statement

In one NPP, it was important to determine whether a fire involving a 4-gallon spill of lubricating oil from an auxiliary feed water (AFW) pump could cause damage to an unprotected electrical cable pull box and cable trays. The unprotected pull box and cable trays were located 10 ft and 8 ft above the AFW pump, respectively. The pump room had a floor area of 20 ft x 20 ft and a ceiling height of 15 ft with a vent opening of 5 ft x 15 ft. Compute the HRR, burning duration, and flame height of the pool fire with a diameter of 4 ft. The lowest cable tray is located 8 ft above the pool. Determine whether flame will impinge upon the cable tray or cable pull box. Assume instantaneous, complete involvement of the liquid pool with no fire growth and no intervention by the plant fire department or automatic suppression systems.

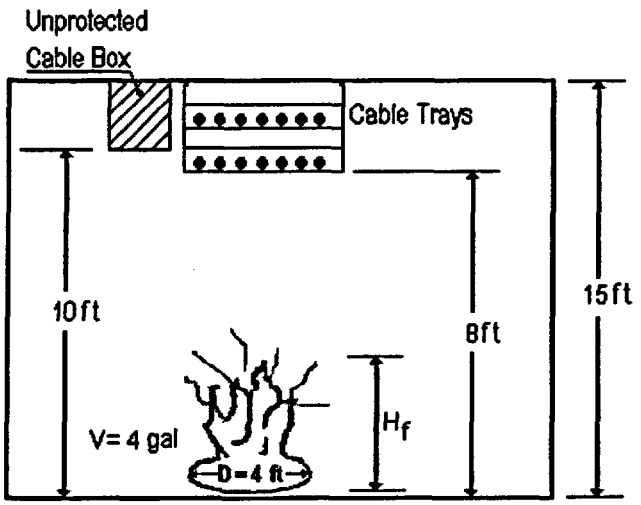

Example 3-3: Compartment with Pool Fire

Solution

Purpose:

(1) Determine the Heat Release Rate (HRR) of the fire source.
(2) Determine the burning duration of the pool fire.
(3) Determine the flame height of the pool fire.
(4) Determine whether the flame will impinge upon the cable tray or cable pull box.

Assumptions:

(1) Instantaneous and complete involvement of the liquid in the pool fire
(2) The pool fire is burning in the open
(3) No fire growth period (instantaneous HRR_{max})
(4) The pool is circular or nearly circular and contains a fixed mass of liquid volume
(5) The fire is located at the center of the compartment or away from the walls

Pre FDT[s] Calculations:

The input parameters of the FDT assigned for this problem are the fuel spill volume, dike area and fuel material. As we can see, the problem statement does not give the dike area but the pool diameter is given. The dike area can be obtained from the formula of the area of a circle, since we assume that the pool has circular shape.

$$A_{dike} = \frac{\pi}{4}D^2 = \frac{\pi}{4}(4\ \ ft)^2 = 12.56\ \ ft^2$$

Spreadsheet (FDT[s]) Information:

Use the following FDT[s]:

(a) HRR_Flame_Height_Burning_Duration_Calculations.xls

FDTs Inputs: (for both spreadsheets)

-Fuel Spill Volume (V) = 4 gallons

-Fuel Spill Area or Dike Area (A_{dike}) = 12.56 ft^2

-Select Fuel Type: **Lube Oil**

Results*

Heat Release Rate (HRR) $\dot{Q}$ kW (Btu/sec)	Burning Duration (t_b) (min.)	Pool Fire Flame Height (H_f) m (ft)	
		Method of Heskestad	Method of Thomas
2,093 (1,984)	4.5	3.8 (12.5)	3.04 (10.0)

*see spreadsheet on next page

Both methods for pool fire flame height estimation show that pool fire flame will impinge upon the cable tray and cable pull box.

Spreadsheet Calculations

CHAPTER 3 - METHOD OF ESTIMATING THE HEAT RELEASE RATE, BURNING DURATION, AND FLAME HEIGHT FOR A LIQUID POOL FIRE

The following calculations estimate the heat release rate, burning duration, and flame height for liquid pool fire.
Parameters should be specified ONLY IN THE YELLOW INPUT PARAMETER BOXES.
All subsequent output values are calculated by the spreadsheet and based on values specified in the input parameters. This spreadsheet is protected and secure to avoid errors due to a wrong entry in a cell(s).
The chapter in the guide should be read before an analysis is made.

INPUT PARAMETERS

Fuel Spill Volume (V)	4.00	gallons	0.0151 m^3
Fuel Spill Area or Dike Area (A_{dike})	12.56	ft^2	1.167 m^2
Mass Burning Rate of Fuel (m'')	0.039	kg/m^2-sec	
Effective Heat of Combustion of Fuel ($\Delta H_{c,eff}$)	46000	kJ/kg	
Fuel Density (ρ)	760	kg/m^3	
Gravitational Acceleration (g)	9.81	m/sec^2	
Ambient Air Density (ρ_a)	1.20	kg/m^3	

THERMAL PROPERTIES DATA

Select Fuel Type
Lube Oil
Scroll to desired fuel type then Click on selection

BURNING RATE DATA FOR LIQUID HYDROCARBON FUELS

Fuel	Mass Burning Rate m'' (kg/m^2-sec)	Heat of Combustion $\Delta H_{c,eff}$ (kJ/kg)	Density ρ (kg/m^3)
Methanol	0.017	20,000	796
Ethanol	0.015	26,800	794
Butane	0.078	45,700	573
Benzene	0.085	40,100	874
Hexane	0.074	44,700	650
Heptane	0.101	44,600	675
Xylene	0.09	40,800	870
Acetone	0.041	25,800	791
Dioxane	0.018	26,200	1035
Diethy Ether	0.085	34,200	714
Benzine	0.048	44,700	740
Gasoline	0.055	43,700	740
Kerosine	0.039	43,200	820
Diesel	0.045	44,400	918
JP-4	0.051	43,500	760
JP-5	0.054	43,000	810
Transformer Oil, Hydrocarbon	0.039	46,000	760
Fuel Oil, Heavy	0.035	39,700	970
Crude Oil	0.0335	42,600	855
Lube Oil	0.039	46,000	760

Reference: *SFPE Handbook of Fire Protection Engineering*, 2nd Edition, 1995, Page 3-2.

ESTIMATING POOL FIRE HEAT RELEASE RATE

Reference: *SFPE Handbook of Fire Protection Engineering*, 2nd Edition, 1995, Page 3-4.

$$Q = m''\Delta H_{c,eff} A_f$$

Where
- Q = pool fire heat release rate (kW)
- m'' = mass burning rate of fuel per unit surface area (kg/m^2-sec)
- $\Delta H_{c,eff}$ = effective heat of combustion of fuel (kJ/kg)
- $A_f = A_{dike}$ = surface area of pool fire (area involved in vaporization) (m^2)

Heat Release Rate Calculation
$Q = m''\Delta H_c A_f$

(Liquids with relatively high flash point, like transformer oil, require localized heating to achieve ignition)

Q = 2093.35 kW 1984.12 BTU/sec **ANSWER**

ESTIMATING POOL FIRE BURNING DURATION

Reference: *SFPE Handbook of Fire Protection Engineering*, 2nd Edition, 1995, Page 3-197.

$t_b = 4V/\pi D^2 v$

Where t_b = burning duration of pool fire (sec)
V = volume of liquid (m^3)
D = pool diameter (m)
v = regression rate (m/sec)

Pool Fire Diameter Calculation

$A_{dike} = \pi D^2/4$

$D = v(4A_{dike}/\pi)$

$D =$ 1.219 m

Calculation for Regression Rate

$v = m''/\rho$

Where m'' = mass burning rate of fuel (kg/m^2-sec)
ρ = liquid fuel density (kg/m^3)

$v =$ 0.000051 m/sec

Burning Duration Calculation

$t_b = 4V/\pi D^2 v$

$t_b =$ 252.87 sec 4.21 minutes **ANSWER**

Note that a liquid pool fire with a given amount of fuel can burn for long periods of time over small area or for short periods of time over a large area.

ESTIMATING POOL FIRE FLAME HEIGHT
METHOD OF HESKESTAD

Reference: *SFPE Handbook of Fire Protection Engineering*, 2nd Edition, 1995, Page 2-10.

$H_f = 0.235\ Q^{2/5} - 1.02\ D$

Where H_f = pool fire flame height (m)
Q = pool fire heat release rate (kW)
D = pool fire diameter (m)

Pool Fire Flame Height Calculation

$H_f = 0.235\ Q^{2/5} - 1.02\ D$

$H_f =$ 3.76 m 12.34 ft **ANSWER**

METHOD OF THOMAS

Reference: *SFPE Handbook of Fire Protection Engineering*, 2nd Edition, 1995, Page 3-204.

$H_f = 42\ D\ (m''/\rho_a\ v(g\ D))^{0.61}$

Where H_f = pool fire flame height (m)
m'' = mass burning rate of fuel per unit surface area (kg/m^2-sec)
ρ_a = ambient air density (kg/m^3)
D = pool fire diameter (m)
g = gravitational acceleration (m/sec^2)

Pool Fire Flame Height Calculation

$H_f = 42\ D\ (m''/\rho_a\ v(g\ D))^{0.61}$

$H_f =$ 2.97 m 9.74 ft **ANSWER**

NOTE

The above calculations are based on principles developed in the SFPE Handbook of Fire Protection Engineering, 2nd Edition, 1995.
Calculations are based on certain assumptions and have inherent limitations. The results of such calculations may or may not have reasonable predictive capabilities for a given situation, and should only be interpreted by an informed user.
Although each calculation in the spreadsheet has been verified with the results of hand calculation, there is no absolute guarantee of the accuracy of these calculations.
Any questions, comments, concerns, and suggestions, or to report an error(s) in the spreadsheets, please send an email to nxi@nrc.gov.

NRR

Office of Nuclear Reactor Regulation

CHAPTER 4. ESTIMATING WALL FIRE FLAME HEIGHT, LINE FIRE FLAME HEIGHT AGAINST THE WALL, AND CORNER FIRE FLAME HEIGHT

4.1 Objectives

This chapter has the following objectives:

- Identify the three regions of a diffusion flame.
- Explain how corners and walls affect flames.
- Define relevant terms, including persistent flame region, intermittent flame region, flame height, and flame extension.

4.2 Introduction

If a fire is located close to a wall or a corner (i.e., formed by the intersection of two walls), the resulting restriction on free air entrainment will have a significant effect on fire growth and spread. The primary impact of walls and corners is to reduce the amount of entrained air available to the flame or plume. This lengthens flames and causes the temperature in a plume to be higher at a given elevation than it would be in the open. Remember that the expression for estimating flame height given in Chapter 3 assumes that the fire source is located away from the walls and corners.

When a diffusion flame develops and is in contact with the wall, its structure can be subdivided into three regions, which are commonly identified as the persistent flame region, the intermittent flame region, and the buoyant plume region. As the plume rises to the ceiling, its direction changes from vertical (upward) to horizontal. Until the point where the flow changes direction, the plume is primarily driven by buoyancy. Thereafter, the plume is driven by its residual momentum and becomes a jet, which is referred to as the "ceiling jet".

The flame heats the wall material with which it comes in contact. The heat flux to the wall is a function of location and is highest in the persistent flame region. The flame height depends on the amount of air entrained which, in turn, is proportional to the fuel heat release rate. On occasions, it may also be necessary to calculate the flame projections against a wall from the spill of flammable liquid in a trench or flames emerging from a burning electrical cabinet.

4.3 Flame Height Correlations for Walls Fires, Line Fires, and Corner Fires

In a wall flame, the wall-side heat flux appears to be governed by the flame radiation, while the heat flux in the far field is primarily attributable to convection. This implies that flame height can be a scaling factor representing the distribution of wall heat transfer. Using the analogy of unconfined fires, the flame height is expected to depend only on the gross heat release rate of the fuel.

The terms "flame height" and "flame extension" designate the lengths of flame in the vertical and horizontal directions, respectively. A wall flame generated from a fire located against a wall can only entrain air from half of its perimeter. Thus, wall flame can be considered to be geometrically half of an axisymmetric flame and its mass flow rate, in turn, is half of that from an axisymmetric flame.

A flame generated from a fire located in a corner of a compartment (typically where the intersecting walls form a 90° angle) is referred to as corner flame. Corner fires are more severe than wall fires because of the radiative heat exchange between the two burning walls. However, the physical phenomena controlling fire growth in corner and wall scenarios are very similar, if not identical.

4.3.1 Wall Fire Flame Height Correlation

Delischatsios (1984) reported by Budnick, Evans, and Nelson (1997) developed a simple correlation of flame height for elongated fire based on experimental data. Figure 4-1 depicts the configuration used in developing the correlation for wall flame height. In the following correlation, the flame height is based on the rate of HRR per unit length of the fire:

$$H_{f(Wall)} = 0.034\dot{Q}'^{\frac{2}{3}} \qquad (4\text{-}1)$$

Where:

$H_{f(Wall)}$ = wall flame height (m)
0.034 = entrainment coefficient
$\dot{Q}'$ = HRR per unit length of the fire (kW/m)

The above correlation can be used to determine the length of the flame against the wall and to estimate radiative heat transfer to objects in the enclosure.

4.3.2 Line Fire Flame Height Correlation

Delischatsios (1984) reported by Budnick et. al., (1997) also developed a flame height correlation for line fires against a wall. Like the wall fire flame height correlation, this correlation is based on experimental data. The geometry for this case is shown in Figure 4-2. Delischatsios correlation is expressed by the following equation based on the rate of HRR per unit length of the fire:

$$H_{f(Wall,Line)} = 0.017\dot{Q}'^{\frac{2}{3}} \qquad (4\text{-}2)$$

Where:

$H_{f(Wall, Line)}$ = line fire flame height (m)
0.017 = entrainment coefficient
$\dot{Q}'$ = HRR per unit length of the fire (kW/m)

The above correlation can be used to determine the length of the flame against the wall from a line fire source and can be used to estimate radiative heat transfer to objects in the enclosure.

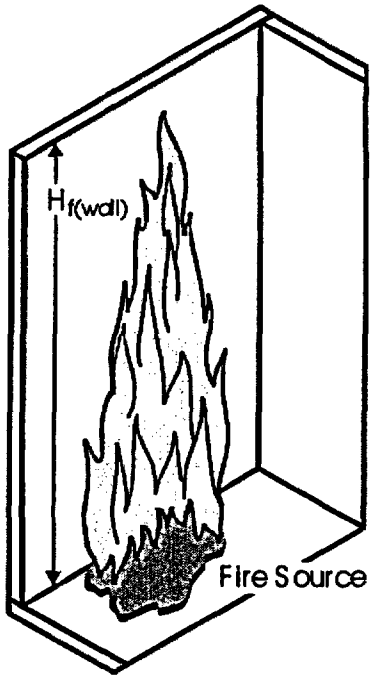

Figure 4-1 Wall Fire Flame Configuration

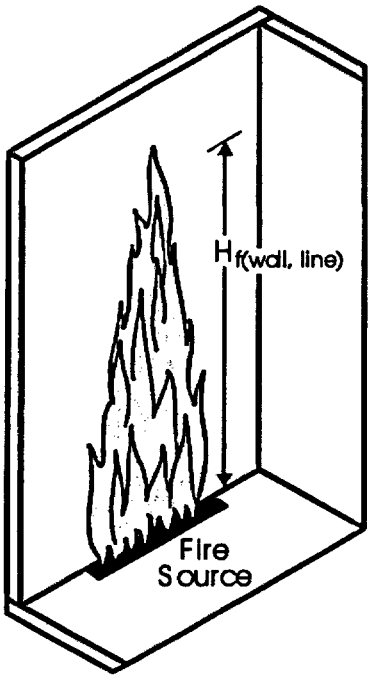

Figure 4-2 Line Fire Flame Against a Wall

4.3.3 Corner Fire Flame Height Correlation

A corner fire may be modeled using a pool fire and specifying the center coordinates as the apex of the corner. At the start of the fire, a diffusion flame develops and makes contact with the walls. As flames spread along the intersection of wall and ceiling, they eventually reach another corner. With a noncombustible ceiling, flames also spread downward. By contrast, with a combustible wall, the heat transfer between two walls in contact with the fire source results in a much more rapid fire spread. Figure 4-3 depicts the configuration used in developing the corner flame height correlation from experimental data. Hesemi and Tokunaga (1983 and 1984) suggest the following expression, based on the correlation of an extensive number of fire tests:

$$H_{f(Corner)} = 0.075\dot{Q}^{\frac{3}{5}} \qquad (4\text{-}3)$$

Where:

$H_{f(Corner)}$ = corner fire flame height (m)
0.075 = entrainment coefficient
$\dot{Q}$ = HRR of the fire (kW)

The above correlation can be used to determine the length of the flame against the intersection of two walls and to estimate radiative heat transfer to objects in the enclosure.

4.4 Assumptions and Limitations

The methods discussed in this chapter are subject to several assumptions and limitations.

(1) This method includes correlations for flame height for flammable solid and liquid fire.

(2) The size of the fire (flame height) depends on the length of the fire.

(3) This correlation is developed for two-dimensional sources.

(4) The turbulent diffusion flames produced by fires burning near or close to a wall configuration of a compartment effect the spread of the fire.

(5) Air is entrained only from one side during the combustion process.

4.5 Required Input for Spreadsheet Calculations

The user must obtain the following information to use the spreadsheet:

(1) fuel type (material)

(2) fuel spill volume (gallons)

(3) fuel spill area (ft^2)

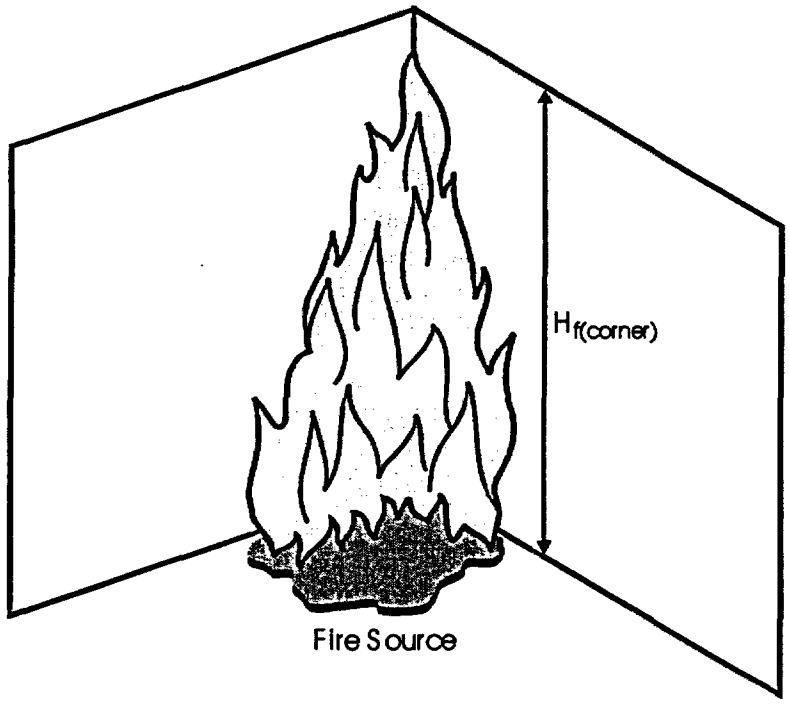

Figure 4-3 Corner Fire Flame Configuration

4.6 Cautions

(1) Use (Wall_Flame_Height.xls, Wall_Line_Flame_Height.xls, and Corner_Flame_Height.xls) spreadsheet on the CD-ROM for wall fire flame height, line fire flame height and corner fire flame height calculations receptively.

(2) Make sure to enter the input parameters in the correct units.

4.7 Summary

This chapter describes methods of calculating the height of a flame and its buoyant gases when the fire source is near a wall or a corner. These fire scenarios are often used as idealized representatives of situations of much greater complexity. The correlations presented were obtained from laboratory scale fires providing local measurements of gas temperature and velocity both below and above the flame tips, as well as measurements of visual flame length.

4.8 References

Budnick, E.K., D.D. Evans, and H.E. Nelson, "Simple Fire Growth Calculations," Section 11 Chapter 10, *NFPA Fire Protection Handbook*, 18th Edition, National Fire Protection Association, Quincy, Massachusetts, 1997.

Delischatsios, M.A., "Flame Heights of Turbulent Wall Fire with Significant Flame Radiation," *Combustion Science and Technology*, Volume 39, pp. 195–214, 1984.

Hesemi Y., and T.Tokunaga, "Modeling of Turbulent Diffusion Flames and Fire Plumes for the Analysis of Fire Growth," Proceedings of the 21st National Heat Transfer Conference, American Society of Mechanical Engineers (ASME), 1983.

Hesemi Y., and T.Tokunaga, "Some Experimental Aspects of Turbulent Diffusion Flames and Buoyant Plumes from Fire Sources Against a Wall and in Corner of Walls," *Combustion Science and Technology*, Volume 40, pp. 1–17, 1984.

4.9 Problems

Example Problem 4.9-1

Problem Statement

A pool fire scenario arises from a breach (leak or rupture) in an oil-filled transformer. This event allows the fuel contents of the transformer to spill 2 gallons along a wall with an area of 9 ft^2. A cable tray is located 8 ft above the fire. Calculate the wall flame height of the fire and determine whether the flame will impinge upon the cable tray.

Solution

Purpose:

(1) Calculate the wall flame height.
(2) Determine whether the flame will impinge upon the cable tray.

Assumptions:

(1) Air is entrained only from one side during the combustion process
(2) The fire is located at the near or close to a wall configuration of a compartment effect the spread of the fire

Spreadsheet (FDT^s) Information:

Use the following FDT^s:

(a) Flame_Height_Calculations.xls (click on *Wall_Flame _Height*)

FDTs Input Parameters:

-Fuel spill volume (V) = 2 gallons
-Fuel Spill Area or Dike Area (A_{dike}) = 9.0 ft^2
-Select Fuel Type: **Transformer Oil, Hydrocarbon**

Results*

Fuel	Wall Fire Flame Height ($H_{f(Wall)}$) m (ft)	Cable Tray Impingement
Transformer Oil, Hydrocarbon	4.72 (15.5)	Yes

*see spreadsheet on next page

Spreadsheet Calculations

CHAPTER 4 - METHOD OF ESTIMATING WALL FIRE FLAME HEIGHT

The following calculations estimate the wall fire flame height.
Parameters should be specified ONLY IN THE YELLOW INPUT PARAMETER BOXES.
All subsequent output values are calculated by the spreadsheet and based on values specified in the input parameters. This spreadsheet is protected and secure to avoid errors due to a wrong entry in a cell(s).
The chapter in the guide should be read before an analysis is made.

INPUT PARAMETERS

Fuel Spill Volume (V)	2.00	gallons	0.0076 m^3
Fuel Spill Area or Dike Area (A_{dike})	9.00	ft^2	0.836 m^2
Mass Burning Rate of Fuel (m")	0.039	kg/m^2-sec	
Effective Heat of Combustion of Fuel ($\Delta H_{c,eff}$)	46000	kJ/kg	

THERMAL PROPERTIES FOR
BURNING RATE DATA FOR LIQUID HYDROCARBON FUELS

Select Fuel Type
Transformer Oil, Hy
Scroll to desired fuel type then Click on selection

Fuel	Mass Burning Rate m" (kg/m^2-sec)	Heat of Combustion $\Delta H_{c,eff}$ (kJ/kg)
Methanol	0.017	20,000
Ethanol	0.015	26,800
Butane	0.078	45,700
Benzene	0.085	40,100
Hexane	0.074	44,700
Heptane	0.101	44,600
Xylene	0.09	40,800
Acetone	0.041	25,800
Dioxane	0.018	26,200
Diethy Ether	0.085	34,200
Benzine	0.048	44,700
Gasoline	0.055	43,700
Kerosine	0.039	43,200
Diesel	0.045	44,400
JP-4	0.051	43,500
JP-5	0.054	43,000
Transformer Oil, Hydrocarbon	0.039	46,000
Fuel Oil, Heavy	0.035	39,700
Crude Oil	0.034	42,600
Lube Oil	0.039	46,000

Reference: *SFPE Handbook of Fire Protection Engineering*, 2nd Edition, Page 3-2.

Heat Release Rate Calculation

Reference: *SFPE Handbook of Fire Protection Engineering*, 2nd Edition, 1995, Page 3-4.

$Q = m''\Delta H_{c,eff}A_f$

Where Q = pool fire heat release rate (kW)
m'' = mass burning rate of fuel per unit surface area (kg/m^2-sec)
$\Delta H_{c,eff}$ = effective heat of combustion of fuel (kJ/kg)
$A_f = A_{dike}$ = surface area of pool fire (area involved in vaporization) (m^2)

$Q = m''\Delta H_c A_f$ (Liquids with relatively high flash point, like transformer oil require localized heating to achieve ignition)

Q = 1500.01 kW 1421.74 BTU/sec

Heat Release Rate Per Unit Length of Fire Calculation

$Q' = Q/L$

Where Q' = heat release rate per unit length (kW/m)
Q = fire heat release rate of the fire (kW)
L = length of the fire source (m)

Fire Source Length Calculation

$L \times W = A_{dike}$

$L \times W =$ 0.836 m^2

$L =$ 0.914 m

$Q' = Q/L$

$Q' =$ 1640.43 kW/m

ESTIMATING WALL FIRE FLAME HEIGHT

Reference: NFPA Fire Protection Handbook, 18th Edition, 1997, Page 11-96.

$H_{f(Wall)} = 0.034\ Q'^{2/3}$

Where $H_{f(wall)}$ = wall fire flame height (m)
Q' = rate of heat release per unit length of the fire (kW/m)

$H_{f(Wall)} = 0.034\ Q'^{2/3}$

$H_{f(Wall)} =$	4.73 m	15.52 ft	**ANSWER**

NOTE

The above calculations are based on principles developed in the SFPE Handbook of Fire Protection Engineering, 2nd Edition, 1995, and NFPA Fire Protection Handbook, 18th Edition, 1997. Calculations are based on certain assumptions and have inherent limitations. The results of such calculations may or may not have reasonable predictive capabilities for a given situation, and should only be interpreted by an informed user.
Although each calculation in the spreadsheet has been verified with the results of hand calculation, there is no absolute guarantee of the accuracy of these calculations.
Any questions, comments, concerns, and suggestions, or to report an error(s) in the spreadsheet, please send an email to nxi@nrc.gov.

NRR

Office of Nuclear Reactor Regulation

Example Problem 4.9-2

Problem Statement

A pool fire scenario arises from a transient combustible liquid spill. This event allows the fuel contents of a 5 gallon can to form along a wall with an area of 15 ft^2. A cable tray is located 12 ft above the fire. Determine the line wall fire flame height and whether the flame will impinge upon the cable tray if the spilled liquids are (a) diesel, (b) acetone, and (c) methanol.

Solution

Purpose:

(1) Calculate the line wall fire flame height using three transient combustibles.
(2) Determine whether the flame will impinge upon the cable tray in each case.

Assumptions:

(1) Air is entrained only from one side during the combustion process
(2) The fire is located at the near or close to a wall configuration of a compartment effect the spread of the fire

Spreadsheet (FDT^s) Information:

Use the following FDT^s:

(a) Flame_Height_Calculations.xls (click on *Wall_Line_Flame _Height*)

FDT^s Input Parameters:

-Fuel spill volume (V) = 5 gallons
-Fuel Spill Area or Dike Area (A_{dike}) = 15.0 ft^2
-Select Fuel Type: Diesel, Acetone, and Methanol

Results*

Fuel	Wall Line Fire Height ($H_{f(Wall\ Line)}$) m (ft)	Cable Tray Impingement
Diesel	3.04 (10.0)	No
Acetone	2.0 (6.5)	No
Methanol	0.91 (3.0)	No

*See spreadsheets on next page

Spreadsheet Calculations

CHAPTER 4 - METHOD OF ESTIMATING LINE FIRE FLAME HEIGHT AGAINST THE WALL

The following calculations estimate the line fire flame height against the wall.
Parameters should be specified ONLY IN THE YELLOW INPUT PARAMETER BOXES.
All subsequent output values are calculated by the spreadsheet and based on values specified in the input parameters. This spreadsheet is protected and secure to avoid errors due to a wrong entry in a cell's).
The chapter in the guide should be read before an analysis is made.

INPUT PARAMETERS

Fuel Spill Volume (V)	5.00	gallons	0.0189 m^3
Fuel Spill Area or Dike Area (A_{dike})	15.00	ft^2	1.394 m^2
Mass Burning Rate of Fuel (m'')	0.045	kg/m^2-sec	
Effective Heat of Combustion of Fuel ($\Delta H_{c,eff}$)	44400	kJ/kg	

THERMAL PROPERTIES FOR

Select Fuel Type
Diesel
Scroll to desired fuel type then Click on selection

BURNING RATE DATA FOR LIQUID HYDROCARBON FUELS

Fuel	Mass Burning Rate m'' (kg/m^2-sec)	Heat of Combustion $\Delta H_{c,eff}$ (kJ/kg)
Methanol	0.017	20,000
Ethanol	0.015	26,800
Butane	0.078	45,700
Benzene	0.085	40,100
Hexane	0.074	44,700
Heptane	0.101	44,600
Xylene	0.09	40,800
Acetone	0.041	25,800
Dioxane	0.018	26,200
Diethy Ether	0.085	34,200
Benzine	0.048	44,700
Gasoline	0.055	43,700
Kerosine	0.039	43,200
Diesel	0.045	44,400
JP-4	0.051	43,500
JP-5	0.054	43,000
Transformer Oil, Hydrocarbon	0.039	46,000
Fuel Oil, Heavy	0.035	39,700
Crude Oil	0.034	42,600
Lube Oil	0.039	46,000

Reference: *SFPE Handbook of Fire Protection Engineering*, 2nd Edition, Page 3-2.

Heat Release Rate Calculation

Reference: *SFPE Handbook of Fire Protection Engineering*, 2nd Edition, 1995, Page 3-4.

$$Q = m''\Delta H_{c,eff}A_f$$

Where Q = pool fire heat release rate (kW)
m'' = mass burning rate of fuel per unit surface area (kg/m^2-sec)
$\Delta H_{c,eff}$ = effective heat of combustion of fuel (kJ/kg)
$A_f = A_{dike}$ = surface area of pool fire (area involved in vaporization) (m^2)

$Q = m''\Delta H_c A_f$ (Liquids with relatively high flash point, like transformer oil require localized heating to achieve ignition)

Q = 2784.30 kW 2639.02 BTU/sec

Heat Release Rate Per Unit Length of Fire Calculation

$Q' = Q/L$

Where Q' = heat release rate per unit length (kW/m)
Q = fire heat release rate of the fire (kW)
L = length of the fire source (m)

Fire Source Length Calculation

$L \times W = A_{dike}$

$L \times W =$ 1.394 m^2

$L =$ 1.180 m

$Q' = Q/L$

$Q' =$ 2358.61 kW/m

ESTIMATING LINE WALL FIRE FLAME HEIGHT

Reference: *NFPA Fire Protection Handbook*, 18th Edition, 1997, Page 11-96.

$H_{f(Wall, Line)} = 0.017\ Q'^{2/3}$

Where $H_{f(Wall)}$ = wall fire flame height (m)
Q' = rate of heat release per unit length of the fire (kW/m)

$H_{f(Wall, Line)} = 0.017\ Q'^{2/3}$

$H_{f(Wall)} =$	3.01 m	9.88 ft	ANSWER

NOTE

The above calculations are based on principles developed in the SFPE Handbook of Fire Protection Engineering, 2nd Edition, 1995, and NFPA Fire Protection Handbook, 18th Edition, 1997. Calculations are based on certain assumptions and have inherent limitations. The results of such calculations may or may not have reasonable predictive capabilities for a given situation, and should only be interpreted by an informed user.
Although each calculation in the spreadsheet has been verified with the results of hand calculation, there is no absolute guarantee of the accuracy of these calculations.
Any questions, comments, concerns, and suggestions, or to report an error(s) in the spreadsheets, please send an email to nxi@nrc.gov.

NRR

Office of Nuclear Reactor Regulation

CHAPTER 4 - METHOD OF ESTIMATING LINE FIRE FLAME HEIGHT AGAINST THE WALL

The following calculations estimate the line fire flame height against the wall.
Parameters should be specified ONLY IN THE YELLOW INPUT PARAMETER BOXES.
All subsequent output values are calculated by the spreadsheet and based on values specified in the input parameters. This spreadsheet is protected and secure to avoid errors due to a wrong entry in a cell(s).
The chapter in the guide should be read before an analysis is made.

INPUT PARAMETERS

Fuel Spill Volume (V)	5.00	gallons	0.0189 m^3
Fuel Spill Area or Dike Area (A_{dike})	15.00	ft^2	1.394 m^2
Mass Burning Rate of Fuel (m'')	0.041	kg/m^2-sec	
Effective Heat of Combustion of Fuel ($\Delta H_{c,eff}$)	25800	kJ/kg	

THERMAL PROPERTIES FOR

Select Fuel Type
Acetone

Scroll to desired fuel type then Click on selection

BURNING RATE DATA FOR LIQUID HYDROCARBON FUELS

Fuel	Mass Burning Rate m'' (kg/m^2-sec)	Heat of Combustion $\Delta H_{c,eff}$ (kJ/kg)
Methanol	0.017	20,000
Ethanol	0.015	26,800
Butane	0.078	45,700
Benzene	0.085	40,100
Hexane	0.074	44,700
Heptane	0.101	44,600
Xylene	0.09	40,800
Acetone	0.041	25,800
Dioxane	0.018	26,200
Diethy Ether	0.085	34,200
Benzine	0.048	44,700
Gasoline	0.055	43,700
Kerosine	0.039	43,200
Diesel	0.045	44,400
JP-4	0.051	43,500
JP-5	0.054	43,000
Transformer Oil, Hydrocarbon	0.039	46,000
Fuel Oil, Heavy	0.035	39,700
Crude Oil	0.034	42,600
Lube Oil	0.039	46,000

Reference: *SFPE Handbook of Fire Protection Engineering*, 2nd Edition, Page 3-2.

Heat Release Rate Calculation

Reference: *SFPE Handbook of Fire Protection Engineering*, 2nd Edition, 1995, Page 3-4.

$$Q = m''\Delta H_{c,eff}A_f$$

Where Q = pool fire heat release rate (kW)
m'' = mass burning rate of fuel per unit surface area (kg/m^2-sec)
$\Delta H_{c,eff}$ = effective heat of combustion of fuel (kJ/kg)
$A_f = A_{dike}$ = surface area of pool fire (area involved in vaporization) (m^2)

$$Q = m''\Delta H_c A_f$$

(Liquids with relatively high flash point, like transformer oil require localized heating to achieve ignition)

Q = 1474.09 kW 1397.17 BTU/sec

Heat Release Rate Per Unit Length of Fire Calculation

$Q' = Q/L$

Where Q' = heat release rate per unit length (kW/m)
Q = fire heat release rate of the fire (kW)
L = length of the fire source (m)

Fire Source Length Calculation

$L \times W = A_{dike}$

$L \times W =$ 1.394 m^2

$L =$ 1.180 m

$Q' = Q/L$

$Q' =$ 1248.72 kW/m

ESTIMATING LINE WALL FIRE FLAME HEIGHT

Reference: *NFPA Fire Protection Handbook*, 18th Edition, 1997, Page 11-96.

$H_{f(Wall, Line)} = 0.017\ Q'^{2/3}$

Where $H_{f(Wall)}$ = wall fire flame height (m)
Q' = rate of heat release per unit length of the fire (kW/m)

$H_{f(Wall, Line)} = 0.017\ Q'^{2/3}$

$H_{f(wall)} =$ 1.97 m 6.47 ft **ANSWER**

NOTE

The above calculations are based on principles developed in the SFPE Handbook of Fire Protection Engineering, 2nd Edition, 1995, and NFPA Fire Protection Handbook, 18th Edition, 1997. Calculations are based on certain assumptions and have inherent limitations. The results of such calculations may or may not have reasonable predictive capabilities for a given situation, and should only be interpreted by an informed user.
Although each calculation in the spreadsheet has been verified with the results of hand calculation, there is no absolute guarantee of the accuracy of these calculations.
Any questions, comments, concerns, and suggestions, or to report an error(s) in the spreadsheets, please send an email to nxi@nrc.gov.

NRR
Office of Nuclear Reactor Regulation

CHAPTER 4 - METHOD OF ESTIMATING LINE FIRE FLAME HEIGHT AGAINST THE WALL

The following calculations estimate the line fire flame height against the wall.
Parameters should be specified ONLY IN THE YELLOW INPUT PARAMETER BOXES.
All subsequent output values are calculated by the spreadsheet and based on values specified in the input parameters. This spreadsheet is protected and secure to avoid errors due to a wrong entry in a cell(s).
The chapter in the guide should be read before an analysis is made.

INPUT PARAMETERS

Fuel Spill Volume (V)	5.00	gallons	0.0189 m^3
Fuel Spill Area or Dike Area (A_{dike})	15.00	ft^2	1.394 m^2
Mass Burning Rate of Fuel (m'')	0.017	kg/m^2-sec	
Effective Heat of Combustion of Fuel ($\Delta H_{c,eff}$)	20000	kJ/kg	

THERMAL PROPERTIES FOR

Select Fuel Type
Methanol
Scroll to desired fuel type then Click on selection

BURNING RATE DATA FOR LIQUID HYDROCARBON FUELS

Fuel	Mass Burning Rate m'' (kg/m^2-sec)	Heat of Combustion $\Delta H_{c,eff}$ (kJ/kg)
Methanol	0.017	20,000
Ethanol	0.015	26,800
Butane	0.078	45,700
Benzene	0.085	40,100
Hexane	0.074	44,700
Heptane	0.101	44,600
Xylene	0.09	40,800
Acetone	0.041	25,800
Dioxane	0.018	26,200
Diethy Ether	0.085	34,200
Benzine	0.048	44,700
Gasoline	0.055	43,700
Kerosine	0.039	43,200
Diesel	0.045	44,400
JP-4	0.051	43,500
JP-5	0.054	43,000
Transformer Oil, Hydrocarbon	0.039	46,000
Fuel Oil, Heavy	0.035	39,700
Crude Oil	0.034	42,600
Lube Oil	0.039	46,000

Reference: *SFPE Handbook of Fire Protection Engineering*, 2nd Edition, Page 3-2.

Heat Release Rate Calculation

Reference: *SFPE Handbook of Fire Protection Engineering*, 2nd Edition, 1995, Page 3-4.

$$Q = m''\Delta H_{c,eff}A_f$$

Where Q = pool fire heat release rate (kW)
m'' = mass burning rate of fuel per unit surface area (kg/m^2-sec)
$\Delta H_{c,eff}$ = effective heat of combustion of fuel (kJ/kg)
$A_f = A_{dike}$ = surface area of pool fire (area involved in vaporization) (m^2)

$Q = m''\Delta H_c A_f$ (Liquids with relatively high flash point, like transformer oil require localized heating to achieve ignition)

Q = 473.81 kW 449.08 BTU/sec

Heat Release Rate Per Unit Length of Fire Calculation

$Q' = Q/L$

Where Q' = heat release rate per unit length (kW/m)
Q = fire heat release rate of the fire (kW)
L = length of the fire source (m)

Fire Source Length Calculation

$L \times W = A_{dike}$

$L \times W =$ 1.394 m^2

$L =$ 1.180 m

$Q' = Q/L$

$Q' =$ 401.37 kW/m

ESTIMATING LINE WALL FIRE FLAME HEIGHT

Reference: *NFPA Fire Protection Handbook*, 18th Edition, 1997, Page 11-96.

$H_{f(Wall, Line)} = 0.017\ Q'^{2/3}$

Where $H_{f(Wall)}$ = wall fire flame height (m)
Q' = rate of heat release per unit length of the fire (kW/m)

$H_{f(Wall, Line)} = 0.017\ Q'^{2/3}$

$H_{f(wall)} =$ 0.93 m 3.03 ft **ANSWER**

NOTE

The above calculations are based on principles developed in the SFPE Handbook of Fire Protection Engineering, 2nd Edition, 1995, and NFPA Fire Protection Handbook, 18th Edition, 1997. Calculations are based on certain assumptions and have inherent limitations. The results of such calculations may or may not have reasonable predictive capabilities for a given situation, and should only be interpreted by an informed user.
Although each calculation in the spreadsheet has been verified with the results of hand calculation, there is no absolute guarantee of the accuracy of these calculations.
Any questions, comments, concerns, and suggestions, or to report an error(s) in the spreadsheets, please send an email to nxi@nrc.gov.

NRR

Office of Nuclear Reactor Regulation

Example Problem 4.9-3

Problem Statement

A pool fire scenario arises from a rupture in a diesel generator fuel line. This event allows diesel fuel to spill 1.5 gallons along the corner of walls with an area of 10 ft^2. An unprotected junction box is located 12 ft above the fire. Determine whether the flame will impinge upon the junction box.

Solution

Purpose:
(1) Calculate the line wall fire flame height
(2) Determine whether the flame will impinge upon the junction box

Assumptions:
(1) Air is entrained only from one side during the combustion process.
(2) The fire is located at the near or close to a wall configuration of a compartment effect the spread of the fire.

Spreadsheet (FDT^s) Information:

Use the following FDT^s:

(a) Flame_Height_Calculations.xls (click on *Corner_Flame _Height*)

FDTs Input Parameters:

-Fuel spill volume (V) = 1.5 gallons
-Fuel Spill Area or Dike Area (A_{dike}) = 10 ft^2
-Select Fuel Type: **Diesel**

Results*

Fuel	Corner Fire Flame Height ($H_{f(Corner)}$) m (ft)	Junction Box Impingement
Diesel	6.9 (22.5)	Yes

*see spreadsheet on next page

Spreadsheet Calculations

CHAPTER 4 - METHOD OF ESTIMATING CORNER FIRE FLAME HEIGHT

The following calculations estimate the corner fire flame height.
Parameters should be specified ONLY IN THE YELLOW INPUT PARAMETER BOXES.
All subsequent output values are calculated by the spreadsheet and based on values specified in the input parameters. This spreadsheet is protected and secure to avoid errors due to a wrong entry in a cell(s).
The chapter in the guide should be read before an analysis is made.

INPUT PARAMETERS

Fuel Spill Volume (V)	1.50	gallons	0.0057 m^3
Fuel Spill Area or Dike Area (A_{dike})	10.00	ft^2	0.929 m^2
Mass Burning Rate of Fuel (m'')	0.045	kg/m^2-sec	
Effective Heat of Combustion of Fuel ($\Delta H_{c,eff}$)	44400	kJ/kg	

Select Fuel Type
Diesel
Scroll to desired fuel type then Click on selection

THERMAL PROPERTIES FOR
BURNING RATE DATA FOR LIQUID HYDROCARBON FUELS

Fuel	Mass Burning Rate m'' (kg/m^2-sec)	Heat of Combustion $\Delta H_{c,eff}$ (kJ/kg)
Methanol	0.017	20,000
Ethanol	0.015	26,800
Butane	0.078	45,700
Benzene	0.085	40,100
Hexane	0.074	44,700
Heptane	0.101	44,600
Xylene	0.09	40,800
Acetone	0.041	25,800
Dioxane	0.018	26,200
Diethy Ether	0.085	34,200
Benzine	0.048	44,700
Gasoline	0.055	43,700
Kerosine	0.039	43,200
Diesel	0.045	44,400
JP-4	0.051	43,500
JP-5	0.054	43,000
Transformer Oil, Hydrocarbon	0.039	46,000
Fuel Oil, Heavy	0.035	39,700
Crude Oil	0.034	42,600
Lube Oil	0.039	46,000

Reference: *SFPE Handbook of Fire Protection Engineering*, 2nd Edition, 1995, Page 3-2.

Heat Release Rate Calculation

Reference: *SFPE Handbook of Fire Protection Engineering*, 2nd Edition, 1995, Page 3-4.

$$Q = m''\Delta H_{c,eff}A_f$$

Where Q = pool fire heat release rate (kW)
m'' = mass burning rate of fuel per unit surface area (kg/m^2-sec)
$\Delta H_{c,eff}$ = effective heat of combustion of fuel (kJ/kg)
$A_f = A_{dike}$ = surface area of pool fire (area involved in vaporization) (m^2)

$Q = m''\Delta H_c A_f$ (Liquids with relatively high flash point, like transformer oil require localized heating to achieve ignition)

Q = 1856.20 kW 1759.35 BTU/sec

ESTIMATING CORNER FIRE FLAME HEIGHT

Reference: *SFPE Handbook of Fire Protection Engineering*, 2nd Edition, Page -2-10.

$H_{f(Corner)} = 0.075\ Q^{3/5}$

Where Q = heat release rate of the fire (kW)

$H_{f(Corner)} = 0.075\ Q^{3/5}$

$H_{f(Corner)}$ =	6.86 m	22.50 ft	ANSWER

NOTE

The above calculations are based on principles developed in the SFPE Handbook of Fire Protection Engineering, 2nd Edition, 1995.
Calculations are based on certain assumptions and have inherent limitations. The results of such calculations may or may not have reasonable predictive capabilities for a given situation, and should only be interpreted by an informed user.
Although each calculation in the spreadsheet has been verified with the results of hand calculation, there is no absolute guarantee of the accuracy of these calculations.
Any questions, comments, concerns, and suggestions, or to report an error(s) in the spreadsheet, please send an email to nxi@nrc.gov.

NRR

Office of Nuclear Reactor Regulation

This page intentionally left blank.

CHAPTER 5. ESTIMATING RADIANT HEAT FLUX FROM FIRE TO A TARGET FUEL

5.1 Objectives

This chapter has the following objectives:

- Introduce the three modes of heat transfer.
- Explain how to calculate the heat flux from a flame to a target outside the flame.
- Discuss point source radiation models and solid flame radiation models.
- Identify the difference between solid flame radiation models at ground level and solid flame radiation models above ground level with and without wind.
- Define relevant terms, including, conduction, convection, radiation, heat flux, emissive power, and configuration factor.

5.2 Introduction

Fire normally grows and spreads by direct burning, which results from impingement of the flame on combustible materials, or from heat transfer to other combustibles by means of conduction, convection, or radiation. All three of these modes of heat transfer may be significant, depending on the specifics of a given fire scenario. Conduction is particularly important in allowing heat to pass through a solid barrier (e.g., fire wall) to ignite material on the other side. Nevertheless, most of the heat transfer in fires typically occurs by means of convection and/or radiation. In fact, it is estimated that in most fires, approximate 75-percent of the heat emanates by convection (heat transfer through a moving gas or liquid). Consider, for example, a scenario in which a fire produces hot gas which is less dense than the surrounding air. This hot gas then rises, carrying heat. The hot products of combustion rising from a fire typically have a temperature in the range of 800 to 1,200 °C (1,472 to 2,192 °F) and a density that is one-quarter that of air. In the third mode of heat transfer, known as radiation, radiated heat is transferred directly to nearby objects. One type of the radiation, known as thermal radiation is the significant mode of heat transfer for situations in which a target is located laterally to the exposure fire source. This would be the case, for example, for a floor-based fire adjacent to an electrical cabinet or a vertical cable tray in a large compartment. Thermal radiation is electromagnetic energy occurring in wavelengths from 2 to 16 μm (infrared). It is the net result of radiation emitted by the radiating substances such as water (H_2O), carbon dioxide (CO_2), and soot in the flame.

Chapter 2 discussed various methods of predicting the temperature of the hot gas layer and the height of the smoke layer in a room fire with natural or forced ventilation. However, those methods are not applicable when analyzing a fire scenario in a very large open space or compartment. In large spaces, such as the reactor building in a boiling water reactor (BWR) or an open space in a turbine building, the volume of the space is too large for a uniform hot gas layer to accumulate. For such scenarios, fire protection engineers must analyze at other forms of heat transfer, such as radiation. A floor-mounted electrical cabinet is an example of a ground-level target. A typical target above ground level is an overhead cable tray.

5.3 Critical Heat Flux to a Target

Radiation from a flame, or any hot gas, is driven by its temperature and emissivity. The emissivity is a measure of how well the hot gas emits thermal radiation (emissivity is define as the ratio of radiant energy emitted by a surface to that emitted by a black body of the same temperature.) Emmisivity is reported as a value between 0 and 1, with 1 being a perfect radiator. The radiation that an observer feels is affected by the flame temperature and size (height) of the flame.

The incident heat flux (the rate of heat transfer per unit area that is normal to the direction of heat flow. It is a total of heat transmitted by radiation, conduction, and convection) required to raise the surface of a target to a critical temperature is termed the critical heat flux. Measured critical heat flux levels for representative cable samples typically range from 15 to 25 kW/m^2 (1.32 to 2.2 Btu/ft^2-sec). For screening purposes, it is appropriate to use value of 10 kW/m^2 (0.88 Btu/ft^2-sec) for IEEE-383 qualified cable and 5 kW/m^2 (0.44 Btu/ft^2-sec) for IEEE-383 unqualified cable. These values are consistent with selected damage temperatures for both types of cables based on the Electrical Power Research Institute (EPRI), "Fire-Induced Vulnerability Evaluation (FIVE)", methodology.

Researchers have developed numerous methods to calculate the heat flux from a flame to a target located outside the flame. Flames have been represented by cylinders, cones, planes, and point sources in an attempt to evaluate the effective configuration factors[1] between the flame and the target. Available predictive methods range from those that are very simple to others that are very complex and involve correlations, detailed solutions to the equations of radiative heat transfer, and computational fluid mechanics. Routine FHAs are most often performed using correlationally based approaches, because of the limited goals of the analyses and the limited resources available for routine evaluation. As a result of their widespread use, a great deal of effort has gone into the development of these methods. Burning rates, flame heights, and radiative heat fluxes are routinely predicted using these approaches.

Fire involving flammable and combustible liquids typically have higher heat release rates (for the same area of fuel involved) than ordinary combustibles fires. The flame from a liquid fire is typically taller, making it a better radiator. Hydrocarbon liquid fires are also quite luminous because of the quantity of soot in the flames. Sooty fires (such as those created by hydrocarbon liquids) are better emitters of thermal radiation. Thus, an observer approaching a flammable/combustible liquid fire feels more heat than an observer approaching a ordinary combustibles fire of comparable size.

The methods presented in this chapter are drawn from the *SFPE Handbook of Fire Protection Engineering*, 3rd Edition, 2002, which examines the accuracy of these methods by comparisons with available experimental data (these methods also presented in the SFPE Engineering Guide, "Assessing Flame Radiation to External Targets from Pool Fires," June 1999).

5.3.1 Point Source Radiation Model

A point source estimate of radiant flux is conceptually the simplest representation configurational model of a radiant source used in calculating the heat flux from a flame to target located outside

---

[1]The configuration factor is a purely geometric quantity, which gives the fraction of the radiation leaving one surface that strikes another surface directly.

the flame. To predict the thermal radiation field of flames, it is customary to model the flame based on the point source located at the center of a flame[2]. The point source model provides a simple relationship that varies as the inverse square of the distance, R. For an actual point source of radiation or a spherical source of radiation, the distance R is simply the distance from the point or from the center of the sphere to the target.

The thermal radiation hazard from a fire depends on a number of parameters, including the composition of the fuel, the size and the shape of the fire, its duration and, proximity to the object at risk, and thermal characteristics of the object exposed to the fire. The point source method may be used for either fixed or transient combustibles. They may involve an electrical cabinet, pump, liquid spill, or intervening combustible at some elevation above the floor. For example, the top of a switchgear or motor control center (MCC) cabinet is a potential location for the point source of a postulated fire in this type of equipment. By contrast, the point source of a transient combustible liquid spill or pump fire is at the floor.

The point source model assumes that radiant energy is released at a point located at the center of the fire. Expressed mathematically, the radiant heat flux at any distance from the source fire is inversely related to the horizontal separation distance (R), by the following equation (Drysdale, 1998):

$$\dot{q}'' = \frac{\chi_r \dot{Q}}{4\pi R^2} \qquad (5\text{-}1)$$

Where:

$\dot{q}''$ = radiant heat flux (kW/m^2)

$\dot{Q}$ = heat release rate of the fire (kW)

R = radial distance from the center of the flame to the edge of source fire (m)

χ_r = fraction of total energy radiated

In general, χ_r depends on the fuel, flame size, and flame configuration, and can vary from approximately 0.15 for low-sooting fuels (e.g., alcohol) to 0.60 for high sooting fuels (e.g., hydrocarbons). For large fires (several meters in diameter), cold soot enveloping the luminous flames can reduce χ_r considerably. See Figure 5-1 for a graphic representation of the relevant nomenclature.

The HRR of a fire can be determined by laboratory or field testing. In the absence of experimental data, the maximum HRR for the fire $(\dot{Q})$, is given by the following equation (Babrauskas, 1995):

$$\dot{Q} = \dot{m}'' \Delta H_{c,eff} A_f \qquad (5\text{-}2)$$

Where:

$\dot{Q}$ = heat release rate of the fire (kW)

$\dot{m}''$ = burning or mass loss rate per unit area per unit time (kg/m^2-sec)

$\Delta H_{c,eff}$ = effective heat of combustion (kJ/kg)

A_f = horizontal burning area of the fuel (m^2)

---

[2]More realistic radiator shapes give rise to very complex configuration factor equations.

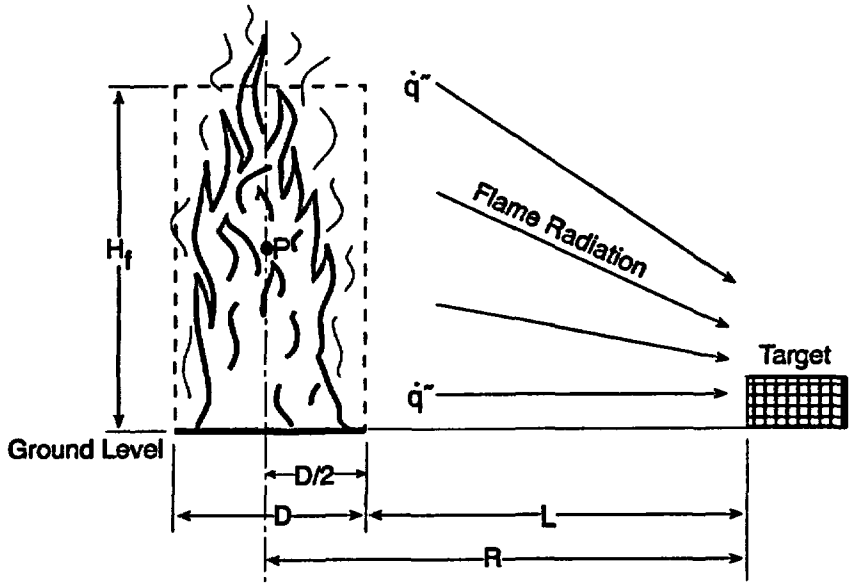

Figure 5-1 Radiant Heat Flux from a Pool Fire to a Floor-Based Target Fuel (Point Source Model)

For non-circular pools, the effective diameter is defined as the diameter of a circular pool with an area equal to the actual pool area, given by the following equation:

$$D = \sqrt{\frac{4A_f}{\pi}} \qquad (5\text{-}3)$$

Where:

A_f = surface area of the non-circular pool (m^2)
D = diameter of the fire (m)

5.3.2 Solid Flame Radiation Models with Target At and Above Ground Level

The solid flame spreadsheet associated with this chapter provides a detailed method for assessing the impact of radiation from pool fires to potential targets using configuration factor algebra. This method covers a range of detailed calculations, some of which are most appropriate for first order initial hazard assessments, while others are capable of more accurate predictions.

The solid flame model assumes that, (1) the fire can be represented by a solid body of a simple geometrical shape, (2) thermal radiation is emitted from its surface, and, (3) non visible gases do not emit much radiation. (See Figures 5-2 and 5-3 for general nomenclature.) To ensure that the fire volume is not neglected, the model must account for the volume because a portion of the fire may be obscured as seen from the target. The intensity of thermal radiation from the pool fire to an element outside the flame envelope for no-wind conditions and for windblown flames is given by the following equation (Beyler, 2002):

$$\dot{q}'' = EF_{1\to 2} \qquad (5\text{-}4)$$

Where:

$\dot{q}''$ = incident radiative heat flux (kW/m^2)
E = average emissive power at flame surface (kW/m^2)
$F_{1\to 2}$ = configuration factor

5.3.2.1 Emissive Power

Emissive power is the total radiative power leaving the surface of the fire per unit area per unit time. Emissive power can be calculated using of Stefan's law, which gives the radiation of a black body in relation to its temperature. Because a fire is not a perfect black body (black body is define as a perfect radiator; a surface with an emissivity of unity and, therefore, a reflectivity of zero), the emissive power is a fraction (ε) of the black body radiation (Beyler, 2002):

$$E = \varepsilon \ \sigma \ T^4 \qquad (5\text{-}5)$$

Where:

E = flame emissive power (kW/m^2)
ε = flame emissivity
σ = Stefan-Boltzmann constant = 5.67×10^{-11} ($kW/m^2\text{-}K^4$)
T = temperature of the fire (K)

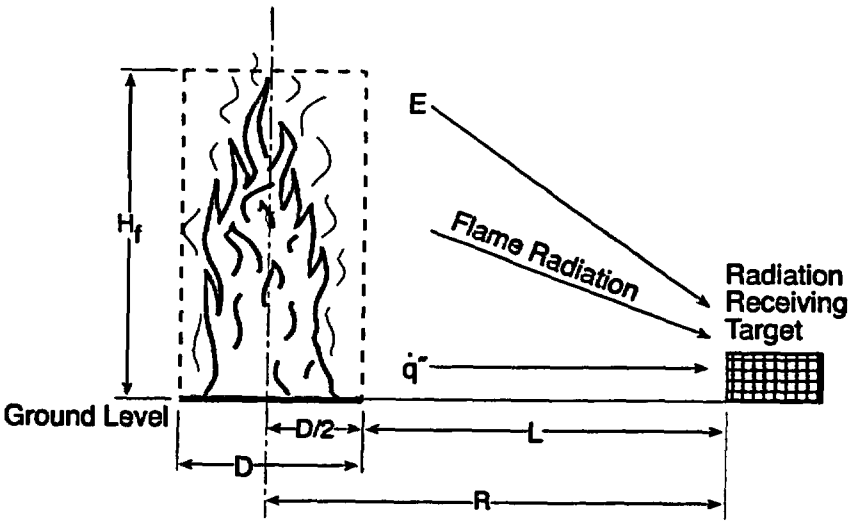

Figure 5-2 Solid Flame Radiation Model with No Wind and Target at Ground Level

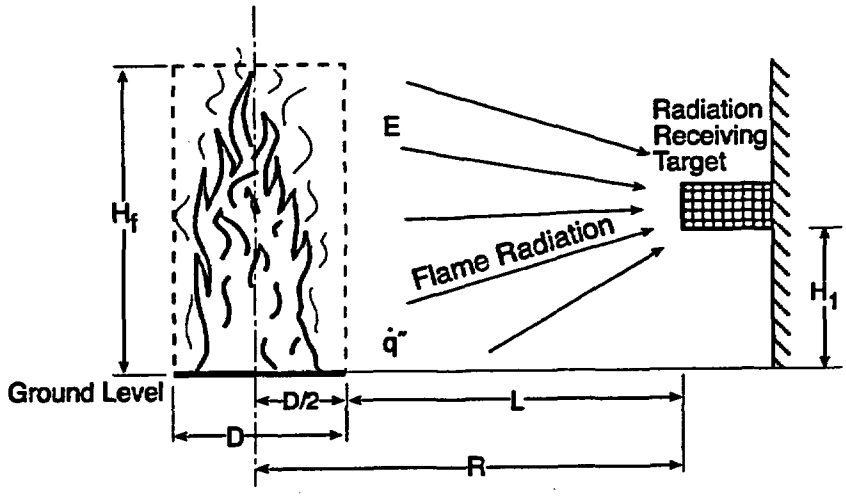

Figure 5-3 Solid Flame Radiation Model with No Wind and Target Above Ground

The use of the Stefan-Boltzmann constant to calculate radiation heat transfer requires knowledge of the temperature and emissivity of the fire; however, turbulent mixing causes the fire temperature to vary. Consequently, Shokri and Beyler (1989) correlated experimental data of flame radiation to external targets in terms of an average emissive power of the flame. For that correlation, the flame is assumed to be a cylindrical, black body, homogeneous radiator with an average emissive power. Thus, effective power of the pool fire in terms of effective diameter is given by the following correlation:

$$E = 58 \left(10^{-0.00823D}\right) \qquad (5\text{-}6)$$

Where:

E = flame emissive power (kW/m^2)
D = diameter of pool fire (m)

This represents the average emissive power over the whole of the flame and is significantly less than the emissive power that can be attained locally. The emissive power is further reduced with increasing pool diameter as a result of the increasing prominence of black smoke outside the flame, which obscures the radiation from the luminous flame.

For non-circular pools, the effective diameter is defined as the diameter of a circular pool with an area equal to the actual pool area given by Equation 5-3.

5.3.2.2 Configuration Factor $F_{1\to 2}$ under Wind-Free Conditions

The configuration factor[3] is a purely geometric quantity, which provides the fraction of the radiation leaving one surface that strikes another surface directly. In other words the configuration factor gives the fraction of hemispherical surface area seen by one differential element when looking at another differential element on the hemisphere.

The configuration factor is a function of target location, flame size (height), and fire diameter, and is a value between 0 and 1. When the target is very close to the flame, the configuration factor approaches 1, since everything viewed by the target is the flame. The flame is idealized with a diameter equal to the pool diameter, D, and a height equal to the flame height, H_f. If the pool has a length-to-width ratio near 1, an equivalent area circular source can be used in determining the flame length, H_f, for non-circular pools. (See Figure 5-4 and 5-5 for general definitions applicable to the cylindrical flame model under wind-free conditions.)

Flame height of the pool fire is then determined using the following correlation (Heskestad, 1995):

$$H_f = 0.235\ \dot{Q}^{\frac{2}{5}} - 1.02\ D \qquad (5\text{-}8)$$

Where:

H_f = flame height (m)

[3]The configuration factor is also commonly referred to as the "view factor".

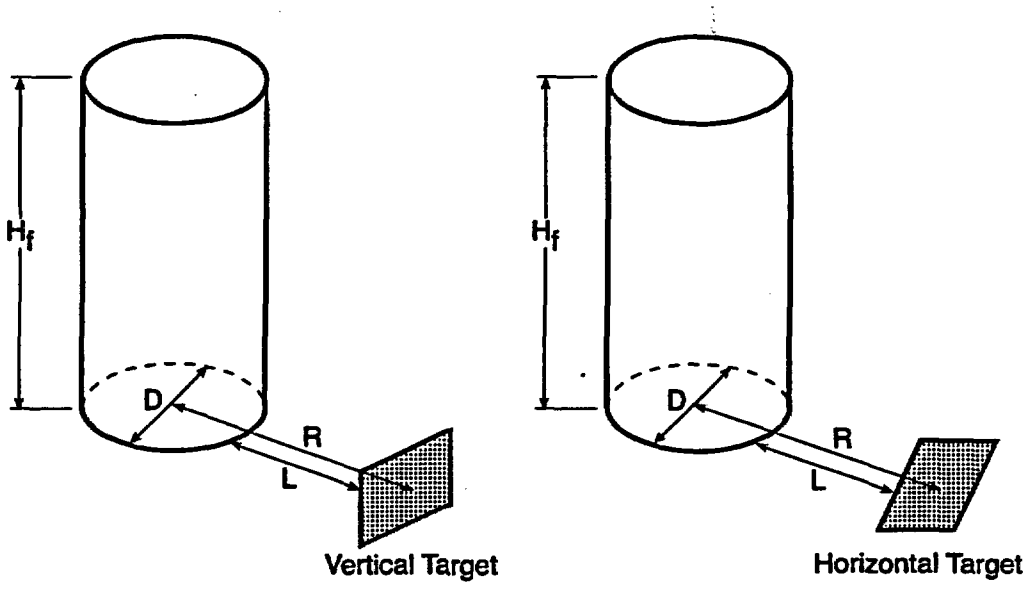

Figure 5-4 Cylindrical Flame Shape Configuration Factor Geometry for Vertical and Horizontal Targets at Ground Level with No Wind

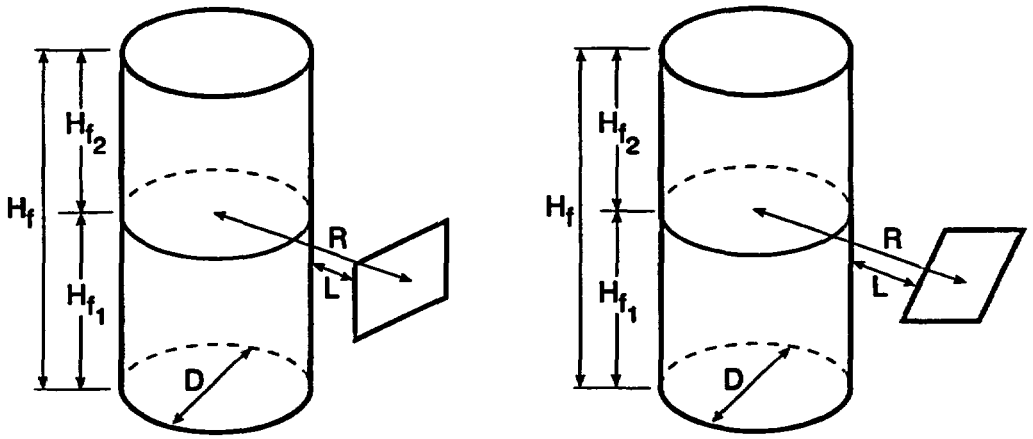

Figure 5-5 Cylindrical Flame Shape Configuration Factor Geometry for Vertical and Horizontal Targets Above Ground with No Wind

$\dot{Q}$ = heat release rate of the fire (kW)
D = diameter of the fire (m)

The HRR of the fire can be determined by laboratory or field testing. In the absence of experimental data, the maximum HRR for the fire $(\dot{Q})$, is given by Equation 5-2.

The radiation exchange factor between a fire and an element outside the fire depends on the shape of the flame, the relative distance between the fire and the receiving element, and the relative orientation of the element. The turbulent diffusion flame can be approximated by a cylinder. Under wind-free conditions, the cylinder is vertical (Figure 5-4). If the target is either at ground level or at the flame height, a single cylinder can represent the flame. However, if the target is above the ground, two cylinders should be used to represent the flame.

Given the diameter and height of the flame, the configuration (or view factor), $F_{1\to 2}$, under wind-free conditions is determined using the following equation related to cylindrical radiation sources.

For horizontal and vertical target orientations at ground level with no-wind conditions, the expressions for estimating the configuration factors are expressed by the following equations (Beyler, 2002):

$$F_{1\to 2,H} = \left(\frac{\left(B-\frac{1}{S}\right)}{\pi\sqrt{B^2-1}} \tan^{-1}\sqrt{\frac{(B+1)(S-1)}{(B-1)(S+1)}} - \frac{\left(A-\frac{1}{S}\right)}{\pi\sqrt{A^2-1}} \tan^{-1}\sqrt{\frac{(A+1)(S-1)}{(A-1)(S+1)}} \right) \quad (5\text{-}10)$$

$$F_{1\to 2,V} = \left(\frac{1}{\pi S}\tan^{-1}\left(\frac{h}{\sqrt{S^2-1}}\right) - \frac{h}{\pi S}\tan^{-1}\sqrt{\frac{(S-1)}{(S+1)}} + \frac{Ah}{\pi S\sqrt{A^2-1}}\tan^{-1}\sqrt{\frac{(A+1)(S-1)}{(A-1)(S+1)}} \right) \quad (5\text{-}11)$$

Where:

$$A = \frac{h^2+S^2+1}{2S}, \quad B = \frac{1+S^2}{2S}$$

$$S = \frac{2L}{D}, \quad h = \frac{2H_f}{D}$$

And:

L = the distance between the center of the cylinder (flame) to the target (m)
H_f = the height of the cylinder (flame) (m)

D = the cylinder (flame) diameter (m)

The maximum configuration factor (or view factor) at a point is given by the vectorial sum of the horizontal and vertical configuration factors:

$$F_{1\to 2,\max(\text{no-wind})} = \sqrt{F^2_{1\to 2,H} + F^2_{1\to 2,V}} \qquad (5\text{-}12)$$

As previously stated, for targets above the ground, two cylinders should be used to represent the flame. In such instances, one cylinder represents the flame below the height of the target, while the other represents the flame above the height of the target (See Figure 5-5). Thus, the following expressions are used to estimate the configuration factor (or view factor) under wind-free conditions for targets above ground level:

$$F_{1\to 2,V_1} = \left(\begin{array}{l} \dfrac{1}{\pi S}.\tan^{-1}\left(\dfrac{h_1}{\sqrt{S^2-1}}\right) - \dfrac{h_1}{\pi S}\tan^{-1}\sqrt{\dfrac{(S-1)}{(S+1)}} + \\ \dfrac{A_1 h_1}{\pi S\sqrt{A_1{}^2-1}}\tan^{-1}\sqrt{\dfrac{(A_1+1)(S-1)}{(A_1-1)(S+1)}} \end{array} \right) \qquad (5\text{-}13)$$

Where:

$$S = \frac{2L}{D}$$

$$h_1 = \frac{2H_{f_1}}{D}$$

$$A_1 = \frac{h_1^2 + S^2 + 1}{2S}$$

$$F_{1\to 2,V_2} = \left(\begin{array}{l} \dfrac{1}{\pi S}.\tan^{-1}\left(\dfrac{h_2}{\sqrt{S^2-1}}\right) - \dfrac{h_2}{\pi S}\tan^{-1}\sqrt{\dfrac{(S-1)}{(S+1)}} + \\ \dfrac{A_2 h_2}{\pi S\sqrt{A_2{}^2-1}}\tan^{-1}\sqrt{\dfrac{(A_2+1)(S-1)}{(A_2-1)(S+1)}} \end{array} \right) \qquad (5\text{-}14)$$

Where:

$$S = \frac{2L}{D}$$

$$h_2 = \frac{2H_{f_2}}{D}$$

$$A_2 = \frac{h_2^2 + S^2 + 1}{2S}$$

And:

L = the distance between the center of the cylinder (flame) to the target (m)
H_f = the height of the cylinder (flame) (m)
D = the cylinder (flame) diameter (m)

The total configuration factor or (view factor) at a point is given by the sum of two configuration factor as follows:

$$F_{1\to 2,V(no-wind)} = F_{1\to 2,V1} + F_{1\to 2,V2} \qquad (5\text{-}15)$$

5.3.2.3 Configuration Factor $F_{1\to 2}$ In Presence of Wind

As discussed in pervious section, in the solid flame radiation model the turbulent flame is approximated by a cylinder. Under wind-free conditions, the cylinder is vertical, in the presence of wind, the flame may not remain vertical and thermal radiation to the surrounding objects will change in the presence of a significant wind. The flame actually follows a curved path and makes an angle of tilt or an angle of deflection approximate to its curved path. Figures 5-6 and 5-7 describe the flame configuration in presence of wind velocity (u_w) for target at and above ground level.

For horizontal and vertical target orientations at ground level in presence of wind, the expression for estimating the configuration factors are expressed by the following equations (Beyler, 2002):

$$\pi F_{1\to 2,H} = \left(\begin{array}{l} \tan^{-1}\dfrac{\sqrt{\dfrac{b+1}{b-1}}}{\pi\sqrt{B^2-1}} - \dfrac{a^2+(b+1)^2-2(b+1+ab\sin\theta)}{\sqrt{AB}}\tan^{-1}\sqrt{\dfrac{A}{B}}\sqrt{\dfrac{(b-1)}{(b+1)}} + \\ \dfrac{\sin\theta}{\sqrt{C}}\left(\tan^{-1}\dfrac{ab-(b^2-1)\sin\theta}{\sqrt{b^2-1}\sqrt{C}} + \tan^{-1}\dfrac{(b^2-1)\sin\theta}{\sqrt{b^2-1}\sqrt{C}}\right) \end{array} \right) \qquad (5\text{-}16)$$

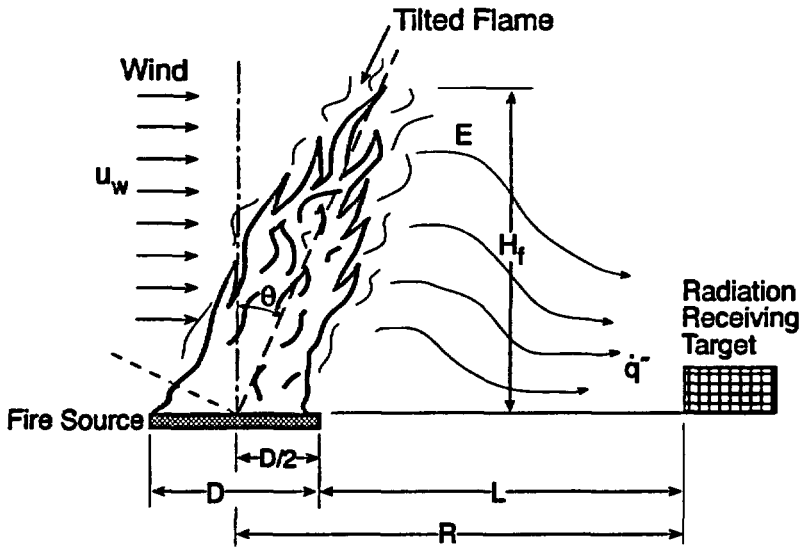

Figure 5-6 Solid Flame Radiation Model in Presence of Wind and Target at Ground Level

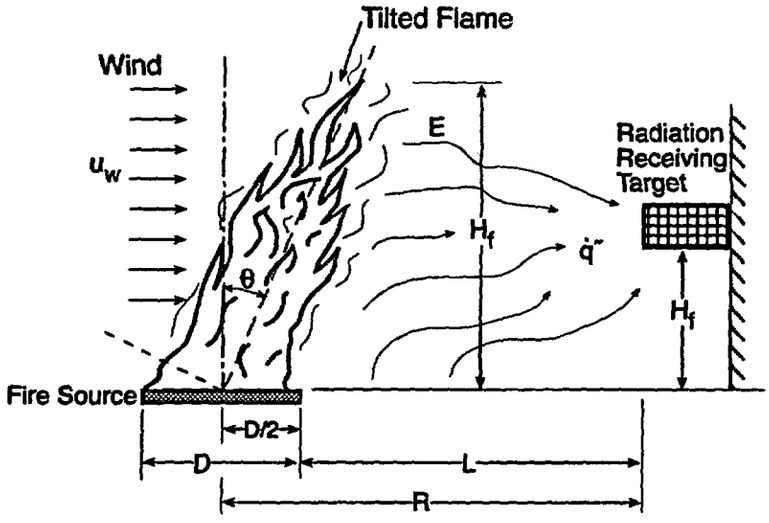

Figure 5-7 Solid Flame Radiation Model in Presence of Wind and Target Above Ground

$$\pi F_{1\to 2,V} = \left(\begin{array}{l} \dfrac{a\cos\theta}{b-a\sin\theta}\dfrac{a^2+(b+1)^2-2b(1+a\sin\theta)}{\sqrt{AB}}\tan^{-1}\sqrt{\dfrac{A}{B}}\sqrt{\dfrac{(b-1)}{(b+1)}}+ \\ \dfrac{\cos\theta}{\sqrt{C}}\left(\tan^{-1}\dfrac{ab-(b^2-1)\sin\theta}{\sqrt{b^2-1}\sqrt{C}}+\tan^{-1}\dfrac{(b^2-1)\sin\theta}{\sqrt{b^2-1}\sqrt{C}}\right)- \\ \dfrac{a\cos\theta}{(b-a\sin\theta)}\tan^{-1}\sqrt{\dfrac{b-1}{b+1}} \end{array} \right) \qquad (5\text{-}17)$$

Where:

$$a = \frac{H_f}{r}$$

$$b = \frac{R}{r}$$

$$A = a^2 + (b+1)^2 - 2a(b+1)\sin\theta$$

$$B = a^2 + (b-1)^2 - 2a(b-1)\sin\theta$$

$$C = 1 + (b^2-1)\cos^2\theta$$

And:

H_f = the height of the tilted cylinder (flame) (m)
r = the cylinder (flame) radius (m)
R = distance from center of the pool fire to edge of the target (m)
θ = flame title or angle of deflection (radians)

The maximum configuration factor for a target at ground level in the presence of wind at a point is given by the vectorial sum of the horizontal and vertical configuration factors:

$$F_{1\to 2,\max(\text{wind})} = \sqrt{F_{1\to 2,H}^2 + F_{1\to 2,V}^2} \qquad (5\text{-}18)$$

For targets above the ground in presence of wind, two cylinders must be used to represent the flame. In such instances, one cylinder represents the flame below the height of the target, while the other represents the flame above the height of the target. The following expressions are used to estimate the configuration or view factor in presence of wind for targets above ground level:

$$\pi F_{1\to 2,V1} = \left(\begin{array}{l} \dfrac{a_1\cos\theta}{b-a_1\sin\theta}\dfrac{a_1^2+(b+1)^2-2b(1+a_1\sin\theta)}{\sqrt{AB}}\tan^{-1}\sqrt{\dfrac{A_1}{B_1}}\sqrt{\dfrac{(b-1)}{(b+1)}}+ \\ \dfrac{\cos\theta}{\sqrt{C}}\left(\tan^{-1}\dfrac{a_1b-(b^2-1)\sin\theta}{\sqrt{b^2-1}\sqrt{C}}+\tan^{-1}\dfrac{(b^2-1)\sin\theta}{\sqrt{b^2-1}\sqrt{C}}\right)- \\ \dfrac{a_1\cos\theta}{(b-a_1\sin\theta)}\tan^{-1}\sqrt{\dfrac{b-1}{b+1}} \end{array} \right) \quad (5\text{-}19)$$

$$\pi F_{1\to 2,V} = \left(\begin{array}{l} \dfrac{a_2\cos\theta}{b-a\sin\theta}\dfrac{a_2^2+(b+1)^2-2b(1+a_2\sin\theta)}{\sqrt{AB}}\tan^{-1}\sqrt{\dfrac{A_2}{B_2}}\sqrt{\dfrac{(b-1)}{(b+1)}}+ \\ \dfrac{\cos\theta}{\sqrt{C}}\left(\tan^{-1}\dfrac{a_2b-(b^2-1)\sin\theta}{\sqrt{b^2-1}\sqrt{C}}+\tan^{-1}\dfrac{(b^2-1)\sin\theta}{\sqrt{b^2-1}\sqrt{C}}\right)- \\ \dfrac{a_2\cos\theta}{(b-a_2\sin\theta)}\tan^{-1}\sqrt{\dfrac{b-1}{b+1}} \end{array} \right) \quad (5\text{-}20)$$

Where:

$$a_1 = \frac{2H_{f1}}{r} = \frac{2H_1}{r}$$

$$a_2 = \frac{2H_{f2}}{r} = \frac{2(H_f - H_{f1})}{r}$$

$$b = \frac{R}{r}$$

$$A_1 = a_1^2 + (b+1)^2 - 2a_1(b+1)\sin\theta$$

$$A_2 = a_2^2 + (b+1)^2 - 2a_2(b+1)\sin\theta$$

$$B_1 = a_1^2 + (b-1)^2 - 2a_1(b-1)\sin\theta$$

$$B_2 = a_2^2 + (b-1)^2 - 2a_2(b-1)\sin\theta$$

$$C = 1 + (b^2-1)\cos^2\theta$$

And:

$H_1 = H_{f1}$ = vertical distance of target from ground level (m)
H_f = the height of the tilted cylinder (flame) (m)
r = the cylinder (flame) radius (m)
R = distance from center of the pool fire to edge of the target (m)
θ = flame title or angle of deflection (radians)

The total configuration or view factor at a point is given by the sum of two configuration factor as follows:

$$F_{1\to 2,V(wind)} = F_{1\to 2,V1} + F_{1\to 2,V2} \qquad (5\text{-}21)$$

In presence of wind, the expression for estimating flame height is expressed by the following correlation, based on the experimental data (Thomas, 1962):

$$H_f = 55D\left(\frac{\dot{m}''}{\rho_a\sqrt{gD}}\right)^{0.67}\left(u^*\right)^{-0.21} \qquad (5\text{-}22)$$

Where:

- D = diameter of pool fire (m)
- $\dot{m}''$ = mass burning rate of fuel (kg/m^2-sec)
- ρ_a = ambient air density (kg/m^3)
- g = gravitational acceleration (m/sec^2)
- u* = nondimensional wind velocity

The nondimensional wind velocity is give by:

$$u^* = \frac{u_w}{\left(\frac{g\dot{m}''D}{\rho_c}\right)^{\frac{1}{3}}} \qquad (5\text{-}23)$$

Where:

- u* = nondimensional wind velocity
- u_w = wind speed or wind velocity (m-sec)
- g = gravitational acceleration (m-sec^2)
- $\dot{m}''$ = mass burning rate of fuel (kg/m^2-sec)
- D = diameter of pool fire (m)
- ρ_c = density of combustion products (kg/m^3)

The correlation relating to angle of tilt or angle of deflection (θ), of the flame from the vertical are expressed by the following equations based on the American Gas Association (AGA) data:

$$\begin{aligned} \text{Cos}\theta &= \{1 \qquad \text{for } u^* \le 1 \\ \text{Cos}\theta &= \left\{\frac{1}{\sqrt{u^*}}\right. \qquad \text{for } u^* \ge 1 \end{aligned} \qquad (5\text{-}24)$$

Where:

- θ = angle of tilt or angle of deflection (radians)
- u* = nondimensional wind velocity

5.4 Method of Estimating Thermal Radiation from Hydrocarbon Fireball

For industrial process many substances that are gases at ambient conditions are stored in container or vessel under pressure in a saturated liquid/vapor form. A rupture of a such vessel will result in a violent incident as the liquid expands into its gaseous form. This phase change forms blast waves with energy equivalent to the change in internal energy of the liquid/vapor, this phenomenon is called the BLEVE. BLEVE is an acronym of Boiling Liquid, Expanding Vapor Explosion. National Fire Protection Association (NFPA), defined a BLEVE as the failure of a major container into two or more pieces, occurring at a moment when the contained liquid is at temperature above its boiling point at normal atmospheric pressure. Typical a BLEVE occurs a metal container has been overheated above 538 °C (1,000 °F) (Nolan 1996). The metal may not be able to withstand the internal stress and therefore failure occurs. The contained liquid space of the vessel normally acts as a heat adsorber, so the wetted portion of the container are usually not at risk, only the surfaces of the internal vapor space. Most BLEVE occur when contains are less ½ to ⅓ full of liquid.

In additional to the container becoming a projectile, the hazard posed by a BLEVE, is its fireball and resulting radiation. The rapid failure of container is followed by a fireball or major fire which produces a powerful radiant heat flux. A container can fail for a number of reasons. It can be damaged by impact from an object, thus causing a crack to develop and grow, either as a result of internal pressure, vessel material brittleness, or both. Thus, the container may rupture completely after impact. Weakening the container's metal beyond the point at which it can withstand internal pressure can also cause large cracks, or even cause the container to separate into two or more pieces. Weakening can result from corrosion, internal overheating, or manufacturing defects, etc.

5.4.1 Radiation due to BLEVEs with Accompanying Fireball

Four parameters often used to determine a fireball's thermal radiation hazard are the mass of fuel involved and the fireball's diameter, duration, and thermal emissive power. Radiation hazards can then be calculated from empirical relation.

Radiation received by an object relatively distant from the fireball can be calculated by the following expression (Hasegawa and Sato, 1977 and Roberts, 1982):

$$\dot{q}_r'' = \frac{828 \ m_F^{0.771}}{R^2} \qquad (5\text{-}25)$$

Where:

$\dot{q}_r''$ = thermal radiation from fireball (kW/m^2)
m_F = mass of fuel vapor (kg)
R = distance from the center of the fireball to the target (m)

The distance from the center of the fireball to the target is given by the following relation:

$$R = \sqrt{Z_p^2 + L^2} \qquad (5\text{-}26)$$

Where:

R = distance from the center of the fireball to the target (m)
Z_p = fireball flame height (m)
L = distance at ground level from the origin (m)

The fireball flame height is given by the following expression (Fay and Lewis 1976):

$$Z_P = 12.73 \ (V_F)^{\frac{1}{3}} \qquad (5\text{-}27)$$

Where:

Z_p = fireball flame height (m)
V_F = volume of fuel vapor (m^3)

The volume of fireball can be calculated from the following relation:

$$V_F = \frac{m_F}{\rho_F} \qquad (5\text{-}28)$$

Where:

V_F = volume of fuel vapor (m^3)
m_F = mass of fuel vapor (kg)
ρ_F = fuel vapor density (kg/m^3)

5.5 Assumptions and Limitations

The methods discussed in this chapter are subject to several assumptions and limitations.

The following assumptions and limitations apply to all radiation models:

(1) The pool is circular or nearly circular.

The following assumptions and limitations apply to point source radiation models:

(2) Except near the base of pool fires, radiation to the surroundings can be approximated as being isotropic or emanating from a point source.

(3) The point source model overestimates the intensity of thermal radiation at the observer's (target) locations close to the fire. This is primarily because the near-field radiation is greatly influenced by the flame size, shape, and tilt, as well as the relative orientation of the observer (target).

(4) A theoretical analysis of radiation from small pool fire by Modak (1977) indicated that the point source model is within 5-percent the correct incident heat flux when L/D >2.5.

(5) The energy radiated from the flame is a specified fraction of the energy released during combustion.

(6) The model can be used to determine thermal radiation hazards in scenarios for which a conservative estimate of the hazard is generally acceptable.

The following assumptions and limitations apply to solid flame radiation models at and above ground level:

(7) The correlation of emissive power was developed on the basis of data from experiments that included kerosene, fuel oil, gasoline, JP-4, JP-5[4], and liquified natural gas (LNG). With the exception of the LNG, these are quite luminous flames, so the correlation should be suitable for most fuels. The pool diameters ranged from 1 to 50 m.

5.6 Required Input for Spreadsheet Calculations

The user must obtain the following information before using the spreadsheet.

(1) fuel type (material)

(2) fuel spill area or dike area (ft^2)

(3) distance between fire and target (ft)

(4) vertical distance of target from ground level (ft)

(5) wind speed (ft/min)

5.7 Cautions

(1) Use (Heat_Flux_Calculations_Wind_Free.xls and Heat_Flux_Calculations_Wind) spreadsheet on the CD-ROM for calculation.

(2) Make sure units are correct on input parameters.

5.8 Summary

Estimating the thermal radiation field surrounding a fire involves the following steps:

(1) Characterize the geometry of the pool fire; that is, determine its HRR and physical dimensions. In calculating thermal radiation, the size of the fire implies the time-averaged size of the visible envelope.

---

[4]Common jet fuel.

(2) Characterize the radiative properties of the fire; that is, determine the average irradiance of the flames (emissive power).

(3) Calculate the radiant intensity at a given location. This can be accomplished after determining the geometry of the fire; its radiation characteristics; and the location, geometry, and orientation of the target.

(4) Determine the HRR from Equation 5-2 or from experimental data available in the literature.

(5) Determine the height of the pool fire.

(6) Calculate the view or configuration factor.

(7) Determine the effective emissive power of the flame.

(8) Calculate the radiative heat flux to the target.

5.9 References

American Gas Association (AGA), "LNG Safety Research Program," Report IS 3–1. 1974.

Babrauskas, V., "Burning Rates," Section 3, Chapter 3-1, *SFPE Handbook of Fire Protection Engineering*, 2nd Edition, P.J. DiNenno, Editor-in-Chief, National Fire Protection Association, Quincy, Massachusetts, 1995.

Drysdale, D.D., *An Introduction to Fire Dynamics*, Chapter 4, "Diffusion Flames and Fire Plumes," 2nd Edition, John Wiley and Sons, New York, pp.109–158, 1998.

Beyler, C.L., "Fire Hazard Calculations for Large Open Hydrogen Fires," Section 3, Chapter 1, *SFPE Handbook of Fire Protection Engineering*, 3rd Edition, P.J. DiNenno, Editor-in-Chief, National Fire Protection Association, Quincy, Massachusetts, 2002.

EPRI TR-100370, "Fire-Induced Vulnerability Evaluation (FIVE)," Final Report, Electrical Power Research Institute, Palo Alto, California, April 1992.

Fay, J.A., and D.H. Lewis, "Unsteady Burning of Unconfined Fuel Vapor Clouds," Sixteenth Symposium (International) on Combustion, The Combustion Institute, Pittsburgh, Pennsylvania. pp. 1397–1404, 1977.

Hasegawa, K., and K. Sato, "Study on the Fireball Following Steam Explosion of n-Pentane," Second Symposium on Loss Prevention and Safety Promotion in the Process Industries, Heidelberg, pp. 297–304, 1977.

Heskestad, G., "Fire Plumes," Section 2, Chapter 2-2, *SFPE Handbook of Fire Protection Engineering*, 2nd Edition, P.J. DiNenno, Editor-in-Chief, National Fire Protection Association, Quincy, Massachusetts, 1995.

Modak, A., "Thermal Radiation from Pool Fires," *Combustion and Flames*," Volume 29, pp. 177–192, 1977.

Nolan, D.P., *Handbook of Fire and Explosion Protection Engineering Principles for Oil, Gas, Chemical and Related Facilities*, Noyes Publications. Westwood, New Jersey, 1996.

Roberts, A., "Thermal Radiation Hazards from Release of LPG Fires from Pressurized Storage," *Fire Safety Journal*, Volume 4, pp. 197–212, 1982.

SFPE Engineering Guide, "Assessing Flame Radiation to External Targets from Pool Fires," Society of Fire Protection Engineers (SFPE), Bethesda, Maryland, June 1999.

Shokri, M., and C.L. Beyler, "Radiation from Large Pool Fires," *SFPE Journal of Fire Protection Engineering*, Volume 1, No. 4, pp.141–150, 1989.

Thomas, P.H., "The Size of Flames from Natural Fires," Nine Symposium (International) on Combustion, The Combustion Institute, Pittsburgh, pp. 844–859, 1962.

5.10 Additional Readings

Cote, A., and P. Bugbee, *Principle of Fire Protection*, 2nd Edition National Fire Protection Association, Quincy, Massachusetts, 1988.

Friedman, R., *Principles of Fire Protection Chemistry and Physics*, 3rd Edition, National Fire Protection Association, Quincy, Massachusetts, 1998.

Fire Dynamics Course Guide, Federal Emergency Management Agency (FEMA), United States Fire Administration (USFA), National Emergency Training Center, Emmitsburg, Maryland, 1995.

Karlsson, B., and J.G. Quintiere, *Enclosure Fire Dynamics*, Chapter 7, "Heat Transfer in Compartment Fires," CRC Press LLC, New York, pp. 141–180, 1999.

Quintiere, J.G., *Principles of Fire Behavior*, Chapter 3, "Heat Transfer," Delmar Publishers, Albany, New York, pp. 47–64, 1997.

5.11 Problems

Example Problem 5.11-1

Problem Statement

A pool fire scenario arises from a breach (leak or rupture) in a transformer. This event allows the fuel contents of the transformer to spill and spread over the compartment floor. The compartment is very large and has a high ceiling (e.g., typical reactor building elevation of a BWR, turbine building open area). A pool fire ensues with a spill area of 9.0 ft^2 on the concrete floor. Calculate the flame radiant heat flux to a target (cabinet) at ground level with no wind using: a) point source radiation model and b) solid flame radiation model. The distance between the fire source and the target edge is assumed to be 10 ft.

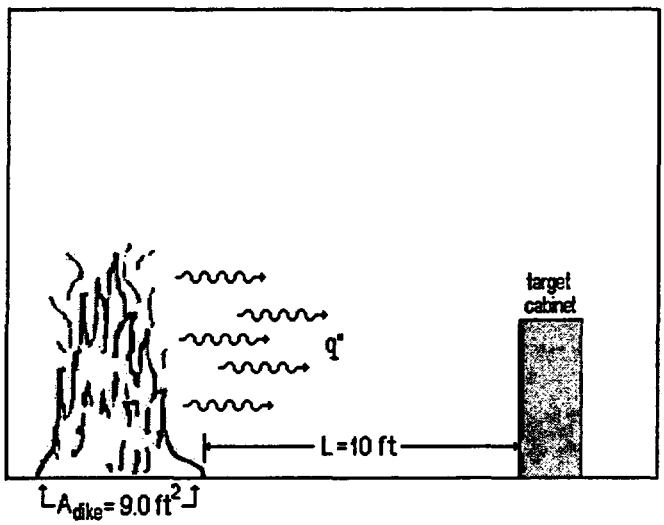

Example Problem 5-1: Radiant Heat Flux from a Pool Fire to a Target Fuel

Solution

Purpose:

(1) Calculate the radiant heat flux from the pool fire to the target cabinet using the point source and solid flame radiation models.

Assumptions:

(1) The pool is circular or nearly circular
(2) Radiation to the surroundings can be approximated as being isotropic or emanating from a point source (valid for point source radiation model only)
(3) The correlation for solid flame radiation model is suitable for most fuels

Spreadsheet (FDT^s) Information:

Use the following FDT^s:

(a) Heat_Flux_Calculations_Wind_Free.xls

(click on *Point Source* and *Solid Flame 1* for point source and solid flame analysis respectively).

FDT[s] Input Parameters: (For both spreadsheets)

-Fuel Spill Area or Dike Area (A_{dike}) = 9.0 ft^2

-Distance between Fire Source and Target (L) = 10 ft

-Select Fuel Type: **Transformer Oil, Hydrocarbon**

Results*

Radiation Model	Radiant Heat Flux $\dot{q}''$ kW (Btu/ft^2-sec)
Point Source	3.3 (0.30)
Solid Flame	3.7 (0.33)

* see spreadsheet on next page

Spreadsheet Calculations

CHAPTER 5 - METHOD OF ESTIMATING RADIANT HEAT FLUX FROM FIRE TO A TARGET FUEL AT GROUND LEVEL UNDER WIND-FREE CONDITION POINT SOURCE RADIATION MODEL

The following calculations estimate the radiative heat flux from a fire to a target fuel.
The purpose of this calculation is to estimate the radiation transmitted from a burning fuel array to a target fuel positioned some distance from the fire at ground level to determine if secondary ignitions are likely with no wind.
Parameters should be specified ONLY IN THE YELLOW INPUT PARAMETER BOXES.
All subsequent output values are calculated by the spreadsheet and based on values specified in the input parameters. This spreadsheet is protected and secure to avoid errors due to a wrong entry in a cell(s).
The chapter in the guide should be read before an analysis is made.

INPUT PARAMETERS

Mass Burning Rate of Fuel (m'')	0.039	kg/m^2-sec	
Effective Heat of Combustion of Fuel ($\Delta H_{c,eff}$)	46000	kJ/kg	
Fuel Area or Dike Area (A_{dike})	9.00	ft^2	0.84 m^2
Distance between Fire and Target (L)	10.00	ft	3.048 m
Radiative Fraction (χ_r)	0.35		

THERMAL PROPERTIES DATA

Select Fuel Type

Transformer Oil, Hydrocarbon

Scroll to desired fuel type then Click on selection

BURNING RATE DATA FOR FUELS

Fuel	Mass Burning Rate m'' (kg/m^2-sec)	Heat of Combustion $\Delta H_{c,eff}$ (kJ/kg)	Density ρ (kg/m^3)
Methanol	0.017	20,000	796
Ethanol	0.015	26,800	794
Butane	0.078	45,700	573
Benzene	0.085	40,100	874
Hexane	0.074	44,700	650
Heptane	0.101	44,600	675
Xylene	0.09	40,800	870
Acetone	0.041	25,800	791
Dioxane	0.018	26,200	1035
Diethy Ether	0.085	34,200	714
Benzine	0.048	44,700	740
Gasoline	0.055	43,700	740
Kerosine	0.039	43,200	820
Diesel	0.045	44,400	918
JP-4	0.051	43,500	760
JP-5	0.054	43,000	810
Transformer Oil, Hydroc	0.039	46,000	760
Fuel Oil, Heavy	0.035	39,700	970
Crude Oil	0.0335	42,600	855
Lube Oil	0.039	46,000	760
Douglas Fir Plywood	0.01082	10,900	500

Reference: *SFPE Handbook of Fire Protection Engineering*, 2nd Edition, 1995, Page 3-2.

ESTIMATING RADIATIVE HEAT FLUX TO A TARGET FUEL

Reference: *SFPE Handbook of Fire Protection Engineering*, 3rd Edition, 2002, Page 3-272.

POINT SOURCE RADIATION MODEL

$q'' = Q\,\chi_r / 4\,\pi\,R^2$

Where
q'' = incident radiative heat flux on the target (kW/m^2)
Q = pool fire heat release rate (kW)
χ_r = radiative fraction
R = distance from center of the pool fire to edge of the target (m)

Pool Fire Diameter Calculation

$A_{dike} =$ $\pi D^2/4$

$D =$ $\sqrt{(4 A_{dike}/\pi)}$

$D =$ 1.03 m

Heat Release Rate Calculation

$Q = m''\Delta H_c A_{dike}$

Where Q = pool fire heat release rate (kW)

m'' = mass burning rate of fuel per unit surface area (kg/m^2-sec)

ΔH_c = *effective heat of combustion of fuel (kJ/kg)*

A = surface area of pool fire (area involved in vaporization) (m^2)

$Q =$ 1500.01 kW

Distance from Center of the Fire to Edge of the Target Calculation

$R = L+D/2$

Where R = distance from center of the pool fire to edge of the target (m)

L = distance between pool fire and target (m)

D = pool fire diameter (m)

$R =$ 3.56 m

Radiative Heat Flux Calculation

$q'' = Q \chi_r / 4 \pi R^2$

$q'' =$ 3.29 kW/m^2 0.29 BTU/ft^2-sec **ANSWER**

CRITICAL HEAT FLUX FOR CABLES FAILURE

Cable Type	Damage Threshold (kW/m^2)	Heat Flux
IEEE-383 qualified	10	
IEEE-383 unqualified	5	

Reference: EPRI 100370, Fire-Induced Vulnerability Evaluation (FIVE), April 1992, page 10.4-7.

NOTE

The above calculations are based on principles developed in the SFPE Handbook of Fire Protection Engineering, 3rd Edition, 2002.

Calculations are based on certain assumptions and have inherent limitations. The results of such calculations may or may not have reasonable predictive capabilities for a given situation, and should only be interpreted by an informed user.

Although each calculation in the spreadsheet has been verified with the results of hand calculation, there is no absolute guarantee of the accuracy of these calculations.

Any questions, comments, concerns, and suggestions, or to report an error(s) in the spreadsheet, please send an email to nxl@nrc.gov.

NRR

Office of Nuclear Reactor Regulation

CHAPTER 5 - METHOD OF ESTIMATING RADIANT HEAT FLUX FROM FIRE TO A TARGET FUEL AT GROUND LEVEL UNDER WIND-FREE CONDITION SOLID FLAME RADIATION MODEL

The following calculations estimate the radiative heat flux from a fire to a target fuel.
The purpose of this calculation is to estimate the radiation transmitted from a burning fuel array to a target fuel positioned some distance from the fire at ground level to determine if secondary ignitions are likely with no wind.
Parameters should be specified ONLY IN THE RED INPUT PARAMETER BOXES.
All subsequent output values are calculated by the spreadsheet and based on values specified in the input parameters. This spreadsheet is protected and secure to avoid errors due to a wrong entry in a cell(s).
The chapter in the guide should be read before an analysis is made.

INPUT PARAMETERS

Mass Burning Rate of Fuel (m'')	0.039	kg/m^2-sec	
Effective Heat of Combustion of Fuel ($\Delta H_{c,eff}$)	46000	kJ/kg	
Fuel Area or Dike Area (A_{dike})	9.00	ft^2	0.84 m^2
Distance between Fire and Target (L)	10.00	ft	3.048 m

THERMAL PROPERTIES DATA

g

Select Fuel Type
Transformer Oil, Hydrocarbon
Scroll to desired fuel type then Click on selection

BURNING RATE DATA FOR FUELS

Fuel	Mass Burning Rate m'' (kg/m^2-sec)	Heat of Combustion $\Delta H_{c,eff}$ (kJ/kg)	Density ρ (kg/m^3)
Methanol	0.017	20,000	796
Ethanol	0.015	26,800	794
Butane	0.078	45,700	573
Benzene	0.085	40,100	874
Hexane	0.074	44,700	650
Heptane	0.101	44,600	675
Xylene	0.09	40,800	870
Acetone	0.041	25,800	791
Dioxane	0.018	26,200	1035
Diethy Ether	0.085	34,200	714
Benzine	0.048	44,700	740
Gasoline	0.055	43,700	740
Kerosine	0.039	43,200	820
Diesel	0.045	44,400	918
JP-4	0.051	43,500	760
JP-5	0.054	43,000	810
Transformer Oil, Hydrocarbon	0.039	46,000	760
Fuel Oil, Heavy	0.035	39,700	970
Crude Oil	0.0335	42,600	855
Lube Oil	0.039	46,000	760
Douglas Fir Plywood	0.01082	10,900	500

Reference: *SFPE Handbook of Fire Protection Engineering*, 2nd Edition, 1995, Page 3-2.

ESTIMATING RADIATIVE HEAT FLUX TO A TARGET FUEL

Reference: *SFPE Handbook of Fire Protection Engineering*, 3rd Edition, 2002, Page 3-276.

SOLID FLAME RADIATION MODEL

$q'' = EF_{1\to2}$

Where
q'' = incident radiative heat flux on the target (kW/m^2)
E = emissive power of the pool fire flame (kW/m^2)
$F_{1\to2}$ = view factor between target and the flame

Pool Fire Diameter Calculation

$A_{dike} = \pi D^2/4$

$D = \sqrt{(4 A_{dike}/\pi)}$

$D =$ 1.03 m

Emissive Power Calculation

$E = 58\,(10^{-0.00823\,D})$

Where E = emissive power of the pool fire flame (kW/m^2)

D = diameter of the pool fire (m)

$E =$ 56.88 kW/m^2

View Factor Calculation

$F_{1\to2,H} = (B-1/S)/\pi(B^2-1)^{1/2} \tan^{-1}((B+1)(S-1)/(B-1)(S+1))^{1/2} - (A-1/S)/(\pi(A^2-1)^{1/2}) \tan^{-1}((A+1)(S-1)/(A-1)(S+1))^{1/2}$

$F_{1\to2,V} = 1/(\pi S) \tan^{-1}(h/(S^2-1)^{1/2}) - (h/\pi S) \tan^{-1}((S-1)/(S+1))^{1/2} + Ah/\pi S(A^2-1)^{1/2} \tan^{-1}((A+1)(S-1)/(A-1)(S+1))^{1/2}$

$A = (h^2+S^2+1)/2S$

$B = (1+S^2)/2S$

$S = 2R/D$

$h = 2H_f/D$

$F_{1\to2,max} = \sqrt{(F^2_{1\to2,H} + F^2_{1\to2,V})}$

Where $F_{1\to2,H}$ = horizontal view factor

$F_{1\to2,V}$ = vertical view factor

$F_{1\to2,max}$ = maximum view factor

R = distance from center of the pool fire to edge of the target (m)

H_f = height of the pool fire flame (m)

D = pool fire diameter (m)

Distance from Center of the Pool Fire to Edge of the Target Calculation

$R = L + D/2 =$ 3.564 m

Heat Release Rate Calculation

$Q = m''\Delta H_c A_f$

$Q =$ 1500.01 kW

Pool Fire Flame Height Calculation

$H_f = 0.235\,Q^{2/5} - 1.02\,D$

$H_f =$ 3.328 m

$S = 2R/D =$	6.908										
$h = 2H_f/D =$	6.451										
$A = (h^2+S^2+1)/2S =$	6.538										
$B = (1+S^2)/2S =$	3.526										
		F_{H1}		F_{H2}		F_{H3}		F_{H4}		$F_{1\to2,H}$	
$F_{1\to2,H} =$	0.024		0.318		0.858		0.315		0.790		0.024
$F_{1\to2,V} =$	0.060	F_{V1}		F_{V2}		F_{V3}		F_{V4}		$F_{1\to2,V}$	
$F_{1\to2,max} = \sqrt{(F^2_{1\to2,H} + F^2_{1\to2,V})}$	0.065		0.035		0.212		0.301		0.790		0.060

Radiative Heat Flux Calculation

$q'' = EF_{1\to2}$

$q'' =$ 3.71 kW/m^2 0.33 BTU/ft^2-sec **ANSWER**

CRITICAL HEAT FLUX FOR CABLES FAILURE

Cable Type	Damage Threshold (kW/m^2)	Heat Flux
IEEE-383 qualified	10	
IEEE-383 unqualified	5	

Reference: EPRI 100370, Fire-Induced Vulnerability Evaluation (FIVE), April 1992, page 10.4-7.

NOTE

The above calculations are based on principles developed in the SFPE Handbook of Fire Protection Engineering, 3rd Edition, 2002.

Calculations are based on certain assumptions and have inherent limitations. The results of such calculations may or may not have reasonable predictive capabilities for a given situation, and should only be interpreted by an informed user.

Although each calculation in the spreadsheet has been verified with the results of hand calculation, there is no absolute guarantee of the accuracy of these calculations.

Any questions, comments, concerns, and suggestions, or to report an error(s) in the spreadsheet, please send an email to nxd@nrc.gov.

NRR

Office of Nuclear Reactor Regulation

Example Problem 5.11-2

Problem Statement

A transient combustible fire scenario may arise from burning wood pallets (4 ft x 4 ft = 16 ft^2), stacked 10 ft high on the floor of a compartment with a very high ceiling. Calculate the flame radiant heat flux to a target (safety-related cabinet) at ground level with no wind, using the point source radiation model and the solid flame radiation model. The distance between the fire source and the target edge (L) is assumed to be 15 ft.

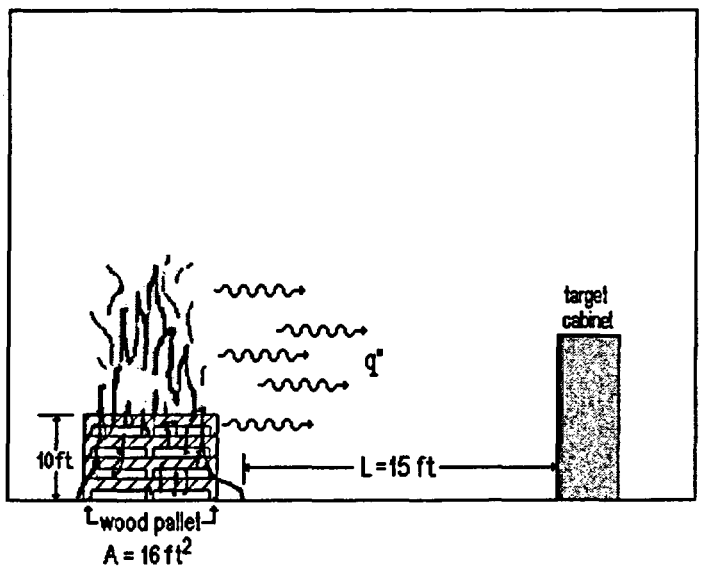

Example Problem 5-2: Radiant Heat Flux from a Burning Pallet to a Target Fuel

Solution

Purpose:

(1) Calculate the radiant heat flux from the fire source to the target cabinet using the point source and solid flame radiation models.

Assumptions:

(1) The fire source will be nearly circular

(2) Radiation to the surroundings can be approximated as being isotropic or emanating from a point source (valid for point source radiation model only)

(3) The correlation for solid flame radiation model is suitable for most fuels

Spreadsheet (FDT^s) Information:

Use the following FDT^s:

(a) Heat_Flux_Calculations_Wind_Free.xls
(click on *Point Source* and *Solid Flame 1* for point source and solid flame analysis respectively)

FDT^s Inputs: (For both spreadsheets)

-Fuel Spill Area or Dike Area (A_{dike}) = 16 ft^2

-Distance between Fire Source and Target (L) = 15 ft

-Select Fuel Type: **Douglas Fir Plywood**

Results*

Radiation Model	Radiant Heat Flux $\dot{q}''$ kW (Btu/ft^2-sec)
Point Source	0.18 (0.02)
Solid Flame	0.5 (0.04)

*see spreadsheet on next page

Spreadsheet Calculations

CHAPTER 5 - METHOD OF ESTIMATING RADIANT HEAT FLUX FROM FIRE TO A TARGET FUEL AT GROUND LEVEL UNDER WIND-FREE CONDITION POINT SOURCE RADIATION MODEL

The following calculations estimate the radiative heat flux from a fire to a target fuel.
The purpose of this calculation is to estimate tha radiation transmitted from a burning fuel array to a target fuel positioned some distance from the fire at ground level to determine if secondary ignitions are likely with no wind.
Parameters should be specified ONLY IN THE YELLOW INPUT PARAMETER BOXES.
All subsequent output values are calculated by the spreadsheet and based on values specified in the input parameters. This spreadsheet is protected and secure to avoid errors due to a wrong entry in a cell(s).
The chapter in the guide should be read before an analysis is made.

INPUT PARAMETERS

Mass Burning Rate of Fuel (m'')	0.01082	kg/m^2-sec	
Effective Heat of Combustion of Fuel ($\Delta H_{c,eff}$)	10900	kJ/kg	
Fuel Area or Dike Area (A_{dike})	16.00	ft^2	1.49 m^2
Distance between Fire and Target (L)	15.00	ft	4.572 m
Radiative Fraction (χ_r)	0.35		

THERMAL PROPERTIES DATA

Select Fuel Type

Douglas Fir Plywood

Scroll to desired fuel type then Click on selection

BURNING RATE DATA FOR FUELS

Fuel	Mass Burning Rate m'' (kg/m^2-sec)	Heat of Combustion $\Delta H_{c,eff}$ (kJ/kg)	Density ρ (kg/m^3)
Methanol	0.017	20,000	796
Ethanol	0.015	26,800	794
Butane	0.078	45,700	573
Benzene	0.085	40,100	874
Hexane	0.074	44,700	650
Heptane	0.101	44,600	675
Xylene	0.09	40,800	870
Acetone	0.041	25,800	791
Dioxane	0.018	26,200	1035
Diethy Ether	0.085	34,200	714
Benzine	0.048	44,700	740
Gasoline	0.055	43,700	740
Kerosine	0.039	43,200	820
Diesel	0.045	44,400	918
JP-4	0.051	43,500	760
JP-5	0.054	43,000	810
Transformer Oil, Hydroc	0.039	46,000	760
Fuel Oil, Heavy	0.035	39,700	970
Crude Oil	0.0335	42,600	855
Lube Oil	0.039	46,000	760
Douglas Fir Plywood	0.01082	10,900	500

Reference: *SFPE Handbook of Fire Protection Engineering*, 2nd Edition, 1995, Page 3-2.

ESTIMATING RADIATIVE HEAT FLUX TO A TARGET FUEL

Reference: *SFPE Handbook of Fire Protection Engineering*, 3rd Edition, 2002, Page 3-272.

POINT SOURCE RADIATION MODEL

$q'' = Q\,\chi_r / 4\,\pi R^2$

Where
q'' = incident radiative heat flux on the target (kW/m^2)
Q = pool fire heat release rate (kW)
χ_r = radiative fraction
R = distance from center of the pool fire to edge of the target (m)

Pool Fire Diameter Calculation

$A_{dike} = \pi D^2/4$

$D = \sqrt{(4\,A_{dike}/\pi)}$

$D =$ 1.38 m

Heat Release Rate Calculation

$Q = m''\Delta H_c A_{dike}$

Where Q = pool fire heat release rate (kW)

m'' = mass burning rate of fuel per unit surface area (kg/m^2-sec)

ΔH_c = effective heat of combustion of fuel (kJ/kg)

A = surface area of pool fire (area involved in vaporization) (m^2)

Q = 175.31 kW

Distance from Center of the Fire to Edge of the Target Calculation

$R = L + D/2$

Where R = distance from center of the pool fire to edge of the target (m)

L = distance between pool fire and target (m)

D = pool fire diameter (m)

R = 5.26 m

Radiative Heat Flux Calculation

$q'' = Q\chi_r / 4\pi R^2$

q'' = 0.18 kW/m^2 0.02 BTU/ft^2-sec **ANSWER**

CRITICAL HEAT FLUX FOR CABLES FAILURE

Cable Type	Damage Threshold Heat Flux (kW/m^2)
IEEE-383 qualified	10
IEEE-383 unqualified	5

Reference: EPRI 100370, Fire-Induced Vulnerability Evaluation (FIVE), April 1992, page 10.4-7.

NOTE

The above calculations are based on principles developed in the SFPE Handbook of Fire Protection Engineering, 3rd Edition, 2002.

Calculations are based on certain assumptions and have inherent limitations. The results of such calculations may or may not have reasonable predictive capabilities for a given situation, and should only be interpreted by an informed user.

Although each calculation in the spreadsheet has been verified with the results of hand calculation, there is no absolute guarantee of the accuracy of these calculations.

Any questions, comments, concerns, and suggestions, or to report an error(s) in the spreadsheet, please send an email to nxi@nrc.gov.

NRR

Office of Nuclear Reactor Regulation

CHAPTER 5 - METHOD OF ESTIMATING RADIANT HEAT FLUX FROM FIRE TO A TARGET FUEL AT GROUND LEVEL UNDER WIND-FREE CONDITION SOLID FLAME RADIATION MODEL

The following calculations estimate the radiative heat flux from a fire to a target fuel.
The purpose of this calculation is to estimate the radiation transmitted from a burning fuel array to a target fuel positioned some distance from the fire at ground level to determine if secondary ignitions are likely with no wind.
Parameters should be specified ONLY IN THE RED INPUT PARAMETER BOXES.
All subsequent output values are calculated by the spreadsheet and based on values specified in the input parameters. This spreadsheet is protected and secure to avoid errors due to a wrong entry in a cell(s).
The chapter in the guide should be read before an analysis is made.

INPUT PARAMETERS

Mass Burning Rate of Fuel (m'')	0.01082	kg/m^2-sec	
Effective Heat of Combustion of Fuel ($\Delta H_{c,eff}$)	10900	kJ/kg	
Fuel Area or Dike Area (A_{dike})	16.00	ft^2	1.49 m^2
Distance between Fire and Target (L)	15.00	ft	4.572 m

THERMAL PROPERTIES DATA

Select Fuel Type
Douglas Fir Plywood
Scroll to desired fuel type then Click on selection

BURNING RATE DATA FOR FUELS

Fuel	Mass Burning Rate m'' (kg/m^2-sec)	Heat of Combustion $\Delta H_{c,eff}$ (kJ/kg)	Density ρ (kg/m^3)
Methanol	0.017	20,000	796
Ethanol	0.015	26,800	794
Butane	0.078	45,700	573
Benzene	0.085	40,100	874
Hexane	0.074	44,700	650
Heptane	0.101	44,600	675
Xylene	0.09	40,800	870
Acetone	0.041	25,800	791
Dioxane	0.018	26,200	1035
Diethy Ether	0.085	34,200	714
Benzine	0.048	44,700	740
Gasoline	0.055	43,700	740
Kerosine	0.039	43,200	820
Diesel	0.045	44,400	918
JP-4	0.051	43,500	760
JP-5	0.054	43,000	810
Transformer Oil, Hydrocarbon	0.039	46,000	760
Fuel Oil, Heavy	0.035	39,700	970
Crude Oil	0.0335	42,600	855
Lube Oil	0.039	46,000	760
Douglas Fir Plywood	0.01082	10,900	500

Reference: *SFPE Handbook of Fire Protection Engineering*, 2nd Edition, 1995, Page 3-2.

ESTIMATING RADIATIVE HEAT FLUX TO A TARGET FUEL

Reference: *SFPE Handbook of Fire Protection Engineering*, 3rd Edition, 2002, Page 3-276.

SOLID FLAME RADIATION MODEL

$q'' = EF_{1\to2}$

Where
q'' = incident radiative heat flux on the target (kW/m^2)
E = emissive power of the pool fire flame (kW/m^2)
$F_{1\to2}$ = view factor between target and the flame

Pool Fire Diameter Calculation

$A_{dike} = \pi D^2/4$

$D = \sqrt{(4 A_{dike}/\pi)}$

$D =$ 1.38 m

Emissive Power Calculation

$E =$	$58\,(10^{-0.00823\,D})$
Where	E = emissive power of the pool fire flame (kW/m^2)
	D = diameter of the pool fire (m)
$E =$	56.51 kW/m^2

View Factor Calculation

$F_{1\to2,H} =$	$(B-1/S)/\pi(B^2-1)^{1/2}\tan^{-1}((B+1)(S-1)/(B-1)(S+1))^{1/2}-(A-1/S)/(\pi(A^2-1)^{1/2})\tan^{-1}((A+1)(S-1)/(A-1)(S+1))^{1/2}$
$F_{1\to2,V} =$	$1/(\pi S)\tan^{-1}(h/(S^2-1)^{1/2})-(h/\pi S)\tan^{-1}((S-1)/(S+1))^{1/2}+Ah/\pi S(A^2-1)^{1/2}\tan^{-1}((A+1)(S-1)/(A-1)(S+1))^{1/2}$
$A =$	$(h^2+S^2+1)/2S$
$B =$	$(1+S^2)/2S$
$S =$	$2R/D$
$h =$	$2H_f/D$
$F_{1\to2,max} =$	$\sqrt{(F^2_{1\to2,H}+F^2_{1\to2,V})}$

Where
- $F_{1\to2,H}$ = horizontal view factor
- $F_{1\to2,V}$ = vertical view factor
- $F_{1\to2,max}$ = maximum view factor
- R = distance from center of the pool fire to edge of the target (m)
- H_f = height of the pool fire flame (m)
- D = pool fire diameter (m)

Distance from Center of the Pool Fire to Edge of the Target Calculation

$R = L + D/2 =$ 5.260 m

Heat Release Rate Calculation

$Q = m''\Delta H_c A_f$

$Q =$ 175.31 kW

Pool Fire Flame Height Calculation

$H_f = 0.235\,Q^{2/5} - 1.02\,D$

$H_f =$ 0.453 m

$S = 2R/D =$	7.647						
$h = 2H_f/D =$	0.658						
$A = (h^2+S^2+1)/2S =$	3.917						
$B = (1+S^2)/2S =$	3.889						
		F_{H1}	F_{H2}	F_{H3}	F_{H4}	$F_{1\to2,H}$	
$F_{1\to2,H} =$	0.000		0.318	0.851	0.318	0.850	0.000
$F_{1\to2,V} =$	0.008	F_{V1}	F_{V2}	F_{V3}	F_{V4}	$F_{1\to2,V}$	
$F_{1\to2,max} = \sqrt{(F^2_{1\to2,H}+F^2_{1\to2,V})}$	0.008		0.004	0.020	0.028	0.850	0.003

Radiative Heat Flux Calculation

$q'' = EF_{1\to2}$

$q'' =$ 0.45 kW/m^2 0.04 BTU/ft^2-sec **ANSWER**

CRITICAL HEAT FLUX FOR CABLES FAILURE

Cable Type	Damage Threshold (kW/m^2)	Heat Flux
IEEE-383 qualified	10	
IEEE-383 unqualified	5	

Reference: EPRI 100370, Fire-Induced Vulnerability Evaluation (FIVE), April 1992, page 10.4-7.

NOTE

The above calculations are based on principles developed in the SFPE Handbook of Fire Protection Engineering, 3rd Edition, 2002.

Calculations are based on certain assumptions and have inherent limitations. The results of such calculations may or may not have reasonable predictive capabilities for a given situation, and should only be interpreted by an informed user.

Although each calculation in the spreadsheet has been verified with the results of hand calculation, there is no absolute guarantee of the accuracy of these calculations.

Any questions, comments, concerns, and suggestions, or to report an error(s) in the spreadsheet, please send an email to nxd@nrc.gov.

NRR

Office of Nuclear Reactor Regulation

Example Problem 5.11-3

Problem Statement

A fire scenario may arise from a horizontal cable tray burning in a very large compartment. The cables in the tray are IEEE-383 unqualified and made of PE/PVC insulation material (assume that the exposed area of the cable is 20 ft^2). Another safety-related cable tray also filled with IEEE-383 unqualified made of PE/PVC insulation material is located at a radial distance (L) of 9 ft from the fire source. Calculate the flame radiant heat flux to a target (safety related cable tray) using the point source radiation model and solid flame radiation model. Is this heat flux sufficient to ignite the cable tray?

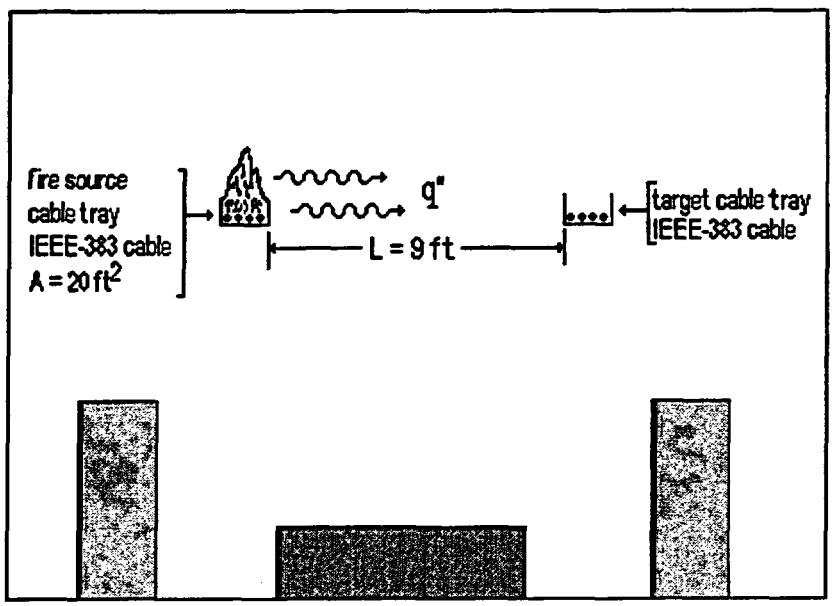

Example Problem 5-3: Radiant Heat Flux from a Burning Cable Tray to a Target Fuel

Solution

Purpose:

(1) Calculate the radiant heat flux from the burning cable tray to the target cable tray. using the point source and solid flame radiation models.

(2) Determine if the heat flux is sufficient to ignite the cable tray.

Assumptions:

(1) The fire source will be nearly circular

(2) Radiation to the surroundings can be approximated as being isotropic or emanating from a point source (point source radiation model only)

(3) The correlation for solid flame radiation model is suitable for most fuels

Spreadsheet (FDT^s) Information:

Use the following FDT^s:

(a) Heat_Flux_Calculations_Wind_Free.xls

(click on *Point Source* and *Solid Flame 1* for point source and solid flame analysis respectively).

FDT[s] Inputs: (For both spreadsheets)

-Mass Burning Rate of Fuel $(\dot{m}'') = 0.0044$ kg/m^2-sec

-Effective Heat of Combustion of Fuel ($\Delta H_{c,eff}$) = 25,100 kJ/kg

-Fuel Spill Area or Dike Area (A_{dike}) = 20 ft^2

-Distance between Fire Source and Target (L) = 9 ft

Note: Since the insulation material (PE/PVC) is not available in the thermal properties data of the spreadsheet, we have to input the mass burning rate and effective heat of combustion in the spreadsheet. Values of cable materials properties are available in Table 3-4. **Do not select** any material, this action will change the $\dot{m}''$ and $\Delta H_{c,eff}$ values previously entered.

Results*

Radiation Model	Radiant Heat Flux $\dot{q}''$ kW (Btu/ft^2-sec)
Point Source	0.5 (0.04)
Solid Flame	1.0 (0.10)

*see spreadsheet on next page

Spreadsheet Calculations

CHAPTER 5 - METHOD OF ESTIMATING RADIANT HEAT FLUX FROM FIRE TO A TARGET FUEL AT GROUND LEVEL UNDER WIND-FREE CONDITION POINT SOURCE RADIATION MODEL

The following calculations estimate the radiative heat flux from a fire to a target fuel.
The purpose of this calculation is to estimate the radiation transmitted from a burning fuel array to a target fuel positioned some distance from the fire at ground level to determine if secondary ignitions are likely with no wind.
Parameters should be specified ONLY IN THE YELLOW INPUT PARAMETER BOXES.
All subsequent output values are calculated by the spreadsheet and based on values specified in the input parameters. This spreadsheet is protected and secure to avoid errors due to a wrong entry in a cell(s).
The chapter in the guide should be read before an analysis is made.

INPUT PARAMETERS

Mass Burning Rate of Fuel (m'')	0.0044	kg/m^2-sec	
Effective Heat of Combustion of Fuel ($\Delta H_{c,eff}$)	25100	kJ/kg	
Fuel Area or Dike Area (A_{dike})	20.00	ft^2	1.86 m^2
Distance between Fire and Target (L)	9.00	ft	2.7432 m
Radiative Fraction (χ_r)	0.35		

THERMAL PROPERTIES DATA

Select Fuel Type

Methanol

Scroll to desired fuel type then Click on selection

BURNING RATE DATA FOR FUELS

Fuel	Mass Burning Rate m'' (kg/m^2-sec)	Heat of Combustion $\Delta H_{c,eff}$ (kJ/kg)	Density ρ (kg/m^3)
Methanol	0.017	20,000	796
Ethanol	0.015	26,800	794
Butane	0.078	45,700	573
Benzene	0.085	40,100	874
Hexane	0.074	44,700	650
Heptane	0.101	44,600	675
Xylene	0.09	40,800	870
Acetone	0.041	25,800	791
Dioxane	0.018	26,200	1035
Diethy Ether	0.085	34,200	714
Benzine	0.048	44,700	740
Gasoline	0.055	43,700	740
Kerosine	0.039	43,200	820
Diesel	0.045	44,400	918
JP-4	0.051	43,500	760
JP-5	0.054	43,000	810
Transformer Oil, Hydroc	0.039	46,000	760
Fuel Oil, Heavy	0.035	39,700	970
Crude Oil	0.0335	42,600	855
Lube Oil	0.039	46,000	760
Douglas Fir Plywood	0.01082	10,900	500

Reference: *SFPE Handbook of Fire Protection Engineering*, 2nd Edition, 1995, Page 3-2.

ESTIMATING RADIATIVE HEAT FLUX TO A TARGET FUEL

Reference: *SFPE Handbook of Fire Protection Engineering*, 3rd Edition, 2002, Page 3-272.

POINT SOURCE RADIATION MODEL

$q'' = Q\,\chi_r / 4\pi R^2$

Where
q'' = incident radiative heat flux on the target (kW/m^2)
Q = pool fire heat release rate (kW)
χ_r = radiative fraction
R = distance from center of the pool fire to edge of the target (m)

Pool Fire Diameter Calculation

A_{dike} = $\pi D^2/4$

D = $\sqrt{(4 A_{dike}/\pi)}$

D = 1.54 m

Heat Release Rate Calculation

$Q = m''\Delta H_c A_{dike}$

Where Q = pool fire heat release rate (kW)

m'' = mass burning rate of fuel per unit surface area (kg/m^2-sec)

ΔH_c = effective heat of combustion of fuel (kJ/kg)

A = surface area of pool fire (area involved in vaporization) (m^2)

Q = 205.20 kW

Distance from Center of the Fire to Edge of the Target Calculation

R = L+D/2

Where R = distance from center of the pool fire to edge of the target (m)

L = distance between pool fire and target (m)

D = pool fire diameter (m)

R = 3.51 m

Radiative Heat Flux Calculation

$q'' = Q \chi_r / 4 \pi R^2$

q'' = 0.46 kW/m^2 0.04 BTU/ft^2-sec **ANSWER**

CRITICAL HEAT FLUX FOR CABLES FAILURE

Cable Type	Damage Threshold (kW/m^2) Heat Flux
IEEE-383 qualified	10
IEEE-383 unqualified	5

Reference: EPRI 100370, Fire-Induced Vulnerability Evaluation (FIVE), April 1992, page 10.4-7.

NOTE

The above calculations are based on principles developed in the SFPE Handbook of Fire Protection Engineering, 3rd Edition, 2002.

Calculations are based on certain assumptions and have inherent limitations. The results of such calculations may or may not have reasonable predictive capabilities for a given situation, and should only be interpreted by an informed user.

Although each calculation in the spreadsheet has been verified with the results of hand calculation, there is no absolute guarantee of the accuracy of these calculations.

Any questions, comments, concerns, and suggestions, or to report an error(s) in the spreadsheet, please send an email to nxi@nrc.gov.

NRR

Office of Nuclear Reactor Regulation

CHAPTER 5 - METHOD OF ESTIMATING RADIANT HEAT FLUX FROM FIRE TO A TARGET FUEL AT GROUND LEVEL UNDER WIND-FREE CONDITION SOLID FLAME RADIATION MODEL

The following calculations estimate the radiative heat flux from a fire to a target fuel.
The purpose of this calculation is to estimate the radiation transmitted from a burning fuel array to a target fuel positioned some distance from the fire at ground level to determine if secondary ignitions are likely with no wind.
Parameters should be specified ONLY IN THE RED INPUT PARAMETER BOXES.
All subsequent output values are calculated by the spreadsheet and based on values specified in the input parameters. This spreadsheet is protected and secure to avoid errors due to a wrong entry in a cell(s).
The chapter in the guide should be read before an analysis is made.

INPUT PARAMETERS

Mass Burning Rate of Fuel (m'')	0.0044	kg/m^2-sec	
Effective Heat of Combustion of Fuel ($\Delta H_{c,eff}$)	25100	kJ/kg	
Fuel Area or Dike Area (A_{dike})	20.00	ft^2	1.86 m^2
Distance between Fire and Target (L)	9.00	ft	2.7432 m

THERMAL PROPERTIES DATA

Select Fuel Type
Methanol
Scroll to desired fuel type then Click on selection

BURNING RATE DATA FOR FUELS

Fuel	Mass Burning Rate m'' (kg/m^2-sec)	Heat of Combustion $\Delta H_{c,eff}$ (kJ/kg)	Density ρ (kg/m^3)
Methanol	0.017	20,000	796
Ethanol	0.015	26,800	794
Butane	0.078	45,700	573
Benzene	0.085	40,100	874
Hexane	0.074	44,700	650
Heptane	0.101	44,600	675
Xylene	0.09	40,800	870
Acetone	0.041	25,800	791
Dioxane	0.018	26,200	1035
Diethy Ether	0.085	34,200	714
Benzine	0.048	44,700	740
Gasoline	0.055	43,700	740
Kerosine	0.039	43,200	820
Diesel	0.045	44,400	918
JP-4	0.051	43,500	760
JP-5	0.054	43,000	810
Transformer Oil, Hydrocarbon	0.039	46,000	760
Fuel Oil, Heavy	0.035	39,700	970
Crude Oil	0.0335	42,600	855
Lube Oil	0.039	46,000	760
Douglas Fir Plywood	0.01082	10,900	500

Reference: *SFPE Handbook of Fire Protection Engineering*, 2nd Edition, 1995, Page 3-2.

ESTIMATING RADIATIVE HEAT FLUX TO A TARGET FUEL

Reference: *SFPE Handbook of Fire Protection Engineering*, 3rd Edition, 2002, Page 3-276.

SOLID FLAME RADIATION MODEL

$q'' = EF_{1\to2}$

Where
q'' = incident radiative heat flux on the target (kW/m^2)
E = emissive power of the pool fire flame (kW/m^2)
$F_{1\to2}$ = view factor between target and the flame

Pool Fire Diameter Calculation

$A_{dike} = \pi D^2/4$

$D = \sqrt{(4\,A_{dike}/\pi)}$

$D =$ 1.54 m

Emissive Power Calculation

$E = 58\,(10^{-0.00823\,D})$

Where E = emissive power of the pool fire flame (kW/m^2)

D = diameter of the pool fire (m)

$E = 58.33\ kW/m^2$

View Factor Calculation

$F_{1\to2,H} = (B-1/S)/\pi(B^2-1)^{1/2}\tan^{-1}((B+1)(S-1)/(B-1)(S+1))^{1/2} - (A-1/S)/(\pi(A^2-1)^{1/2})\tan^{-1}((A+1)(S-1)/(A-1)(S+1))^{1/2}$

$F_{1\to2,V} = 1/(\pi S)\tan^{-1}(h/(S^2-1)^{1/2}) - (h/\pi S)\tan^{-1}((S-1)/(S+1))^{1/2} + Ah/\pi S(A^2-1)^{1/2}\tan^{-1}((A+1)(S-1)/(A-1)(S+1))^{1/2}$

$A = (h^2+S^2+1)/2S$

$B = (1+S^2)/2S$

$S = 2R/D$

$h = 2H_f/D$

$F_{1\to2,max} = v(F^2_{1\to2,H} + F^2_{1\to2,V})$

Where $F_{1\to2,H}$ = horizontal view factor

$F_{1\to2,V}$ = vertical view factor

$F_{1\to2,max}$ = maximum view factor

R = distance from center of the pool fire to edge of the target (m)

H_f = height of the pool fire flame (m)

D = pool fire diameter (m)

Distance from Center of the Pool Fire to Edge of the Target Calculation

$R = L + D/2 = 3.512$ m

Heat Release Rate Calculation

$Q = m''\Delta H_c A_f$

$Q = 631.74$ kW

Pool Fire Flame Height Calculation

$H_f = 0.235\,Q^{2/5} - 1.02\,D$

$H_f = 1.531$ m

$S = 2R/D =$	4.567								
$h = 2H_f/D =$	1.990								
$A = (h^2+S^2+1)/2S =$	2.827								
$B = (1+S^2)/2S =$	2.393								
		F_{H1}	F_{H2}	F_{H3}	F_{H4}	$F_{1\to2,H}$			
$F_{1\to2,H} =$	0.016		0.318	0.896	0.314	0.859	0.016		
$F_{1\to2,V} =$	0.063	F_{V1}	F_{V2}	F_{V3}	F_{V4}	$F_{1\to2,V}$			
$F_{1\to2,max} = v(F^2_{1\to2,H} + F^2_{1\to2,V}$	0.065		0.029	0.094	0.148	0.859	0.063		

Radiative Heat Flux Calculation

$q'' = EF_{1\to2}$

$q''_r =$ 3.65 kW/m^2 0.32 $BTU/ft^2\text{-}sec$ **ANSWER**

CRITICAL HEAT FLUX FOR CABLES FAILURE

Cable Type	Damage Threshold (kW/m^2)	Heat Flux
IEEE-383 qualified	10	
IEEE-383 unqualified	5	

Reference: EPRI 100370, Fire-Induced Vulnerability Evaluation (FIVE), April 1992, page 10.4-7.

NOTE

The above calculations are based on principles developed in the SFPE Handbook of Fire Protection Engineering, 3rd Edition, 2002.

Calculations are based on certain assumptions and have inherent limitations. The results of such calculations may or may not have reasonable predictive capabilities for a given situation, and should only be interpreted by an informed user.

Although each calculation in the spreadsheet has been verified with the results of hand calculation, there is no absolute guarantee of the accuracy of these calculations.

Any questions, comments, concerns, and suggestions, or to report an error(s) in the spreadsheet, please send an email to nxi@nrc.gov.

NRR

Office of Nuclear Reactor Regulation

Example Problem 5.11-4

Problem Statement

A pool fire scenario may arise from a leak in a pump. This event allows the lubricating oil to spill and spread over the compartment floor. A pool fire ensues with a spill of 9.6 ft^2 is considered in a compartment with a concrete floor. The distance (L) between the pool fire and the target edge is assumed to be 10 ft. Calculate the flame radiant heat flux to a vertical target (safety-related) 8 ft high above the floor with no wind, using the solid flame radiation model. If the vertical target contains IEEE-383 unqualified cables, could be cable failure in this fire scenario?

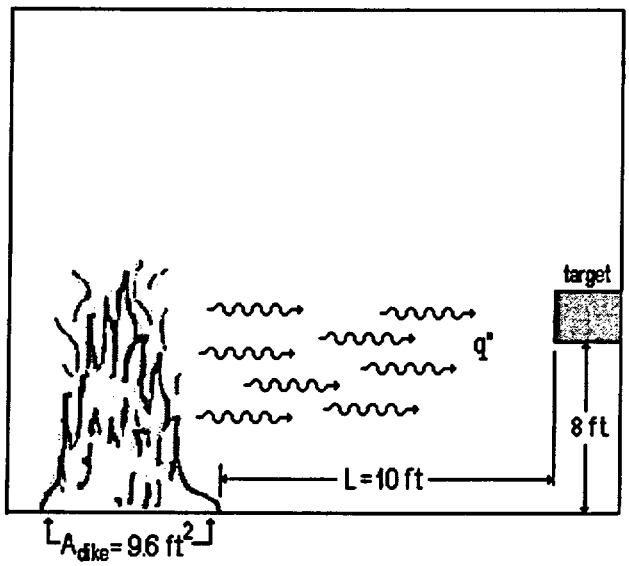

Example Problem 5-4: Radiant Heat Flux from a Pool Fire to a Vertical Target Fuel

Solution

Purpose:

(1) Calculate the radiant heat flux from the pool fire to the vertical target using the solid flame radiation model.

(2) Determine if the IEEE-383 unqualified cables are damaged.

Assumptions:

(1) The fire source will be nearly circular

(2) The correlation for solid flame radiation model is suitable for most fuels

Spreadsheet (FDT^s) Information:

Use the following FDT^s:

(a) Heat_Flux_Calculations_Wind_Free.xls (click on *Solid Flame* 2)

FDT^s Inputs:

-Fuel Spill Area or Dike Area (A_{dike}) = 9.6 ft^2

-Distance between Fire Source and Target (L) = 10 ft

-Vertical Distance of Target from Ground ($H_1 = H_{f1}$) = 8 ft

-Select Fuel Type: **Lube Oil**

Results*

Radiation Model	Radiant Heat Flux $\dot{q}''$ kW (Btu/ft^2-sec)	Cable Failure
Solid Flame	5.0 (0.40)	Yes $\dot{q}_r'' \sim \dot{q}_{critical}''$

*see spreadsheet on next page

Spreadsheet Calculations

CHAPTER 5 - METHOD OF ESTIMATING RADIANT HEAT FLUX FROM FIRE TO A TARGET FUEL ABOVE GROUND LEVEL UNDER WIND-FREE CONDITION SOLID FLAME RADIATION MODEL

The following calculations estimate the radiative heat flux from fire to a target fuel.
The purpose of this calculation is to estimate the radiation transmitted from a burning fuel array to a target fuel positioned some distance from the fire above ground level to determine if secondary ignitions are likely with no wind.
Parameters should be specified ONLY IN THE RED INPUT PARAMETER BOXES.
All subsequent output values are calculated by the spreadsheet and based on values specified in the input parameters. This spreadsheet is protected and secure to avoid errors due to a wrong entry in a cell(s).
The chapter in the guide should be read before an analysis is made.

INPUT PARAMETERS

Mass Burning Rate of Fuel (m'')	0.039	kg/m^2-sec	
Effective Heat of Combustion of Fuel ($\Delta H_{c,eff}$)	46000	kJ/kg	
Fuel Area or Dike Area (A_{dike})	9.60	ft^2	0.89 m^2
Distance between Fire and Target (L)	10.00	ft	3.048 m
Vertical Distance of Target from Ground ($H_1 = H_{f1}$)	8.00	ft	2.4384 m

THERMAL PROPERTIES DATA

Select Fuel Type

Lube Oil

Scroll to desired fuel type then Click on selection

BURNING RATE DATA FOR FUELS

Fuel	Mass Burning Rate m'' (kg/m^2-sec)	Heat of Combustion $\Delta H_{c,eff}$ (kJ/kg)	Density ρ (kg/m^3)
Methanol	0.017	20,000	796
Ethanol	0.015	26,800	794
Butane	0.078	45,700	573
Benzene	0.085	40,100	874
Hexane	0.074	44,700	650
Heptane	0.101	44,600	675
Xylene	0.09	40,800	870
Acetone	0.041	25,800	791
Dioxane	0.018	26,200	1035
Diethy Ether	0.065	34,200	714
Benzine	0.048	44,700	740
Gasoline	0.055	43,700	740
Kerosine	0.039	43,200	820
Diesel	0.045	44,400	918
JP-4	0.051	43,500	760
JP-5	0.054	43,000	810
Transformer Oil, Hydrocarbo	0.039	46,000	760
Fuel Oil, Heavy	0.035	39,700	970
Crude Oil	0.0335	42,600	855
Lube Oil	0.039	46,000	760
Douglas Fir Plywood	0.01082	10,900	500

Reference: *SFPE Handbook of Fire Protection Engineering*, 2nd Edition, 1995, Page 3-2.

ESTIMATING RADIATIVE HEAT FLUX TO A TARGET FUEL

Reference: *SFPE Handbook of Fire Protection Engineering*, 3rd Edition, 2002, Page 3-276.

SOLID FLAME RADIATION MODEL

$q'' = EF_{1\to2}$

Where q'' = incident radiative heat flux on the target (kW/m^2)
E = emissive power of the pool fire flame (kW/m^2)
$F_{1\to2}$ = view factor between target and the flame

Pool Fire Diameter Calculation

$A_{dike} = \pi D^2/4$

$D = \sqrt{(4\ A_{dike}/\pi)}$

$D =$ 1.07 m

Emissive Power Calculation

$E = 58\ (10^{-0.00823\ D})$

$E =$ 56.84 (kW/m^2)

View Factor Calculation

$F_{1\to2,V1} = 1/(\pi S)\tan^{-1}(h_1/(S^2-1)^{1/2})-(h_1/\pi S)\tan^{-1}((S-1)/(S+1))^{1/2}+A_1h_1/\pi S(A_1^2-1)^{1/2}\tan^{-1}((A_1+1)(S-1)/(A_1-1)(S+1))^{1/2}$

$F_{1\to2,V2} = 1/(\pi S)\tan^{-1}(h_2/(S^2-1)^{1/2})-(h_2/\pi S)\tan^{-1}((S-1)/(S+1))^{1/2}+A_2h_2/\pi S(A_2^2-1)^{1/2}\tan^{-1}((A_2+1)(S-1)/(A_2-1)(S+1))^{1/2}$

$A_1 = (h_1^2+S^2+1)/2S$

$A_2 = (h_2^2+S^2+1)/2S$

$B = (1+S^2)/2S$

$S = 2R/D$

$h_1 = 2H_{f1}/D$

$h_2 = 2H_{f2}/D$

$F_{1\to2,V} = F_{1\to2,V1} + F_{1\to2,V2}$

Where $F_{1\to2,V}$ = total vertical view factor

R = distance from center of the pool fire to edge of the target (m)

H_f = *height of the pool fire flame (m)*

D = pool fire diameter (m)

Distance from Center of the Pool Fire to Edge of the Target Calculation

$R = L+D/2 =$ 3.581 m

Heat Release Rate Calculation

$Q = m''\Delta H_c A_f$

$Q =$ 1600.01 kW

Pool Fire Flame Height Calculation

$H_f = 0.235\ Q^{2/5}-1.02\ D$

$H_f =$ 3.408 m

$S = 2R/D =$	6.721							
$h_1 = 2H_{f1}/D =$	4.576							
$h_2 = 2H_{f2}/D =$	$2(H_f-H_{f1})/D =$	1.820						
$A_1 = (h_1^2+S^2+1)/2S =$		4.993						
$A_2 = (h_2^2+S^2+1)/2S =$		3.681						
$B = (1+S^2)/2S =$		3.435						
			F_{V1}	F_{V2}	F_{V3}	F_{V4}	$F_{1\to2,V1}$	
$F_{1\to2,V1} =$	0.054		0.029	0.154	0.221	0.812	0.054	
$F_{1\to2,V2} =$	0.027	F_{V1}	F_{V2}	F_{V3}	F_{V4}	$F_{1\to2,V2}$		
$F_{1\to2,V} = F_{1\to2,V1} + F_{1\to2,}$	0.082		0.013	0.061	0.090	0.850	0.027	

Radiative Heat Flux Calculation

$q'' = EF_{1\to2}$

q'' =	4.64 kW/m^2	0.41 BTU/ft^2-sec	ANSWER

CRITICAL HEAT FLUX FOR CABLES FAILURE

Cable Type	Damage Threshold (kW/m^2)	Heat Flux
IEEE-383 qualified	10	
IEEE-383 unqualified	5	

Reference: EPRI 100370, Fire-Induced Vulnerability Evaluation (FIVE), April 1992, page 10.4-7.

NOTE

The above calculations are based on principles developed in the SFPE Handbook of Fire Protection Engineering, 3rd Edition, 2002.

Calculations are based on certain assumptions and have inherent limitations. The results of such calculations may or may not have reasonable predictive capabilities for a given situation, and should only be interpreted by an informed user.

Although each calculation in the spreadsheet has been verified with the results of hand calculation, there is no absolute guarantee of the accuracy of these calculations.

Any questions, comments, concerns, and suggestions, or to report an error(s) in the spreadsheet, please send an email to nxi@nrc.gov.

NRR

Office of Nuclear Reactor Regulation

This page intentionally left blank.

Example Problem 5.11-5

Problem Statement

A transient combustible fire scenario may arise from burning wood pallets (4 ft x 4 ft = 16 ft^2), stacked 14 ft high on the floor of a compartment. Calculate the flame radiant heat flux from exposure fire to a vertical target (safety-related electrical junction box) located 8 ft high above the floor, with no wind, using the solid flame radiation model. The distance (L) between the transient fire and the target edge is assumed to be 15 ft.

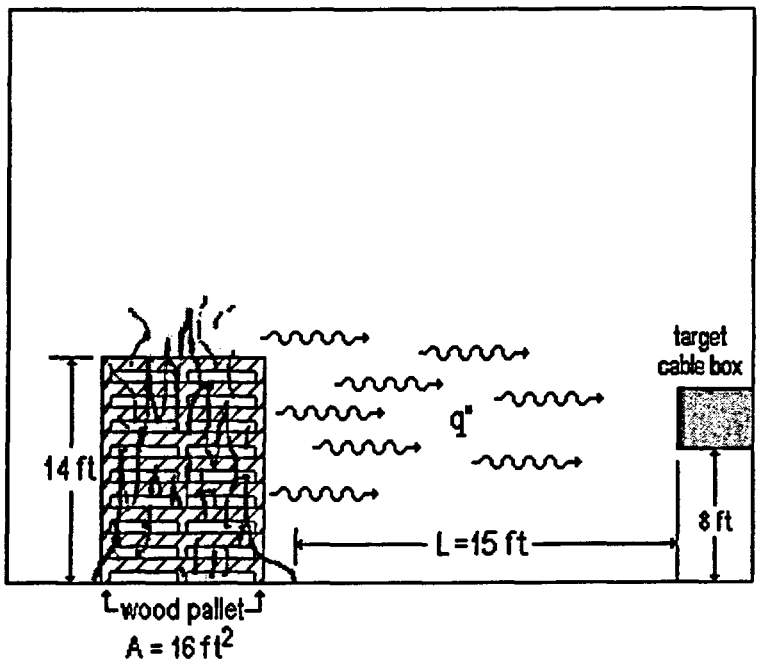

Example Problem 5-5: Radiant Heat Flux from a Burning Pallet to a Vertical Target Fuel

Solution

Purpose:

(1) Calculate the radiant heat flux from the burning pallet to the vertical target fuel using the solid flame radiation model.

Assumptions:

(1) The fire source will be nearly circular

(2) The correlation for solid flame radiation model is suitable for most fuels

Spreadsheet (FDT^s) Information:

Use the following FDT^s:

(a) Heat_Flux_Calculations_Wind_Free.xls (click on *Solid Flame 2*)

FDT^s Inputs:

-Fuel Spill Area or Dike Area (A_{dike}) = 16 ft^2

-Distance between Fire Source and Target (L) = 15 ft

-Vertical Distance of Target from Ground ($H_t = H_{ft}$) = 8 ft

-Select Fuel Type: **Douglas Fir Plywood**

Results*

Radiation Model	Radiant Heat Flux $\dot{q}''$ kW (Btu/ft^2-sec)
Solid Flame	0.30 (0.03)

*see spreadsheet on next page

Spreadsheet Calculations

CHAPTER 5 - METHOD OF ESTIMATING RADIANT HEAT FLUX FROM FIRE TO A TARGET FUEL ABOVE GROUND LEVEL UNDER WIND-FREE CONDITION SOLID FLAME RADIATION MODEL

The following calculations estimate the radiative heat flux from fire to a target fuel.
The purpose of this calculation is to estimate the radiation transmitted from a burning fuel array to a target fuel positioned some distance from the fire above ground level to determine if secondary ignitions are likely with no wind.
Parameters should be specified ONLY IN THE RED INPUT PARAMETER BOXES.
All subsequent output values are calculated by the spreadsheet and based on values specified in the input parameters. This spreadsheet is protected and secure to avoid errors due to a wrong entry in a cell(s).
The chapter in the guide should be read before an analysis is made.

INPUT PARAMETERS

Mass Burning Rate of Fuel (m'')	0.01082	kg/m^2-sec	
Effective Heat of Combustion of Fuel ($\Delta H_{c,eff}$)	10900	kJ/kg	
Fuel Area or Dike Area (A_{dike})	16.00	ft^2	1.49 m^2
Distance between Fire and Target (L)	15.00	ft	4.572 m
Vertical Distance of Target from Ground ($H_1 = H_f$)	8.00	ft	2.4384 m

THERMAL PROPERTIES DATA

Select Fuel Type

Douglas Fir Plywood

Scroll to desired fuel type then Click on selection

BURNING RATE DATA FOR FUELS

Fuel	Mass Burning Rate m'' (kg/m^2-sec)	Heat of Combustion $\Delta H_{c,eff}$ (kJ/kg)	Density ρ (kg/m^3)
Methanol	0.017	20,000	796
Ethanol	0.015	26,800	794
Butane	0.078	45,700	573
Benzene	0.085	40,100	874
Hexane	0.074	44,700	650
Heptane	0.101	44,600	675
Xylene	0.09	40,800	870
Acetone	0.041	25,800	791
Dioxane	0.018	26,200	1035
Diethy Ether	0.065	34,200	714
Benzine	0.048	44,700	740
Gasoline	0.055	43,700	740
Kerosine	0.039	43,200	820
Diesel	0.045	44,400	918
JP-4	0.051	43,500	760
JP-5	0.054	43,000	810
Transformer Oil, Hydrocarbo	0.039	46,000	760
Fuel Oil, Heavy	0.035	39,700	970
Crude Oil	0.0335	42,600	855
Lube Oil	0.039	46,000	760
Douglas Fir Plywood	0.01082	10,900	500

Reference: *SFPE Handbook of Fire Protection Engineering*, 2nd Edition, 1995, Page 3-2.

ESTIMATING RADIATIVE HEAT FLUX TO A TARGET FUEL

Reference: *SFPE Handbook of Fire Protection Engineering*, 3rd Edition, 2002, Page 3-276.

SOLID FLAME RADIATION MODEL

$q'' = EF_{1\to2}$

Where
q'' = incident radiative heat flux on the target (kW/m^2)
E = emissive power of the pool fire flame (kW/m^2)
$F_{1\to2}$ = view factor between target and the flame

Pool Fire Diameter Calculation

$A_{dike} =$ $\pi D^2/4$

$D =$ $\sqrt{(4\ A_{dike}/\pi)}$

$D =$ 1.38 m

Emissive Power Calculation

$E =$ $58\ (10^{-0.00823\ D})$

$E =$ 56.51 (kW/m^2)

View Factor Calculation

$F_{1\to2,V1} =$ $1/(\pi S)\tan^{-1}(h_1/(S^2-1)^{1/2})-(h_1/\pi S)\tan^{-1}((S-1)/(S+1))^{1/2}+A_1h_1/\pi S(A_1^2-1)^{1/2}\tan^{-1}((A_1+1)(S-1)/(A_1-1)(S+1))^{1/2}$

$F_{1\to2,V2} =$ $1/(\pi S)\tan^{-1}(h_2/(S^2-1)^{1/2})-(h_2/\pi S)\tan^{-1}((S-1)/(S+1))^{1/2}+A_2h_2/\pi S(A_2^2-1)^{1/2}\tan^{-1}((A_2+1)(S-1)/(A_2-1)(S+1))^{1/2}$

$A_1 =$ $(h_1^2+S^2+1)/2S$

$A_2 =$ $(h_2^2+S^2+1)/2S$

$B =$ $(1+S^2)/2S$

$S =$ $2R/D$

$h_1 =$ $2H_{f1}/D$

$h_2 =$ $2H_{f2}/D$

$F_{1\to2,V} =$ $F_{1\to2,V1} + F_{1\to2,V2}$

Where $F_{1\to2,V}$ = total vertical view factor
R = distance from center of the pool fire to edge of the target (m)
H_f = height of the pool fire flame (m)
D = pool fire diameter (m)

Distance from Center of the Pool Fire to Edge of the Target Calculation

$R = L+D/2 =$ 5.260 m

Heat Release Rate Calculation

$Q = m''\Delta H_c A_f$

$Q =$ 175.31 kW

Pool Fire Flame Height Calculation

$H_f = 0.235\ Q^{2/5}-1.02\ D$

$H_f =$ 0.453 m

$S = 2R/D =$	7.647	
$h_1 = 2H_{f1}/D =$	3.545	
$h_2 = 2H_{f2}/D =$	$2(H_f-H_{f1})/D =$	-2.887
$A_1 = (h_1^2+S^2+1)/2S =$		4.710
$A_2 = (h_2^2+S^2+1)/2S =$		4.434
$B = (1+S^2)/2S =$		3.889

		F_{V1}	F_{V2}	F_{V3}	F_{V4}	$F_{1\to2,V1}$
$F_{1\to2,V1} =$	0.037	0.018	0.106	0.151	0.827	0.037
$F_{1\to2,V2} =$	-0.032	F_{V1}	F_{V2}	F_{V3}	F_{V4}	$F_{1\to2,V2}$
$F_{1\to2,V} = F_{1\to2,V1} + F_{1\to2,}$	0.005	-0.015	-0.088	-0.123	0.834	-0.032

Radiative Heat Flux Calculation

$q'' = EF_{1\to2}$

$q'' =$	0.30 kW/m^2	0.03 $BTU/ft^2\text{-}sec$	**ANSWER**

CRITICAL HEAT FLUX FOR CABLES FAILURE

Cable Type	Damage Threshold (kW/m^2)	Heat Flux
IEEE-383 qualified	10	
IEEE-383 unqualified	5	

Reference: EPRI 100370, Fire-Induced Vulnerability Evaluation (FIVE), April 1992, page 10.4-7.

NOTE

The above calculations are based on principles developed in the SFPE Handbook of Fire Protection Engineering, 3rd Edition, 2002.

Calculations are based on certain assumptions and have inherent limitations. The results of such calculations may or may not have reasonable predictive capabilities for a given situation, and should only be interpreted by an informed user.

Although each calculation in the spreadsheet has been verified with the results of hand calculation, there is no absolute guarantee of the accuracy of these calculations.

Any questions, comments, concerns, and suggestions, or to report an error(s) in the spreadsheet, please send an email to nxi@nrc.gov.

NRR

Office of Nuclear Reactor Regulation

This page intentionally left blank.

Example Problem 5.11-6

Problem Statement

A fire scenario may arise from a horizontal cable tray burning in a very large compartment. The cables in the tray are IEEE-383 unqualified and made of XPE/FRXPE insulation material (assume that the exposed area of the cable is 20 ft^2). A safety-related cable tray is also filled with IEEE-383 qualified made of XLPE insulation material located at a radial distance (L) of 9 ft from the fire source and 6 ft above the fire source. Calculate the flame radiant heat flux to a target (safety related cable tray) using the solid flame radiation model. Is the IEEE-383 qualified cable tray damaged?

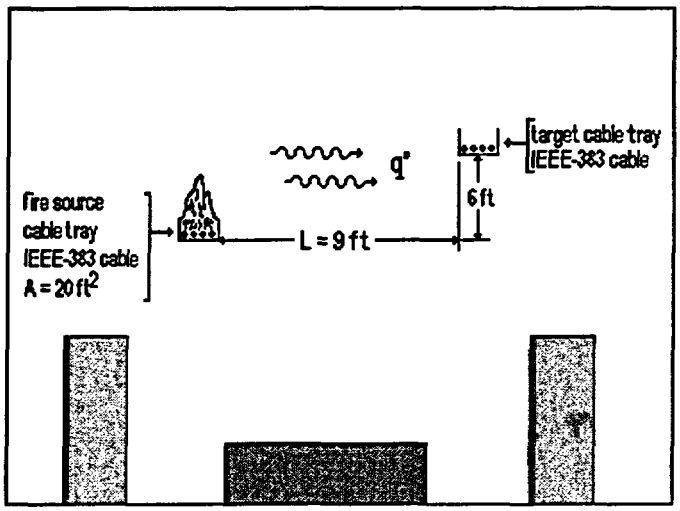

Example Problem 5-6: Radiant Heat Flux from a Burning Cable Tray to a Vertical Target Fuel

Solution

Purpose:

(1) Calculate the radiant heat flux from the burning cable tray to the vertical target cable tray using the solid flame radiation model.
(2) Determine if the IEEE-383 cable tray (target) is damaged.

Assumptions:

(1) The fire source will be nearly circular
(2) The correlation for solid flame radiation model is suitable for most fuels

Spreadsheet (FDT^s) Information:

Use the following FDT^s:

(a) Heat_Flux_Calculations_Wind_Free.xls (click on *Solid Flame 2*)

FDT^s Inputs:

-Mass Burning Rate of Fuel ($\dot{m}''$) = 0.0037 kg/m^2-sec
-Effective Heat of Combustion of Fuel ($\Delta H_{c,eff}$) = 28,300 kJ/kg
-Fuel Spill Area or Dike Area (A_{dike}) = 20 ft^2

-Distance between Fire Source and Target (L) = 9 ft
-Vertical Distance of Target from Ground ($H_1 = H_{ft}$) = 6 ft

Note: Since the insulation material (XPE/FRXPE) is not available in the thermal properties data of the spreadsheet, we have to input the mass burning rate and effective heat of combustion in the spreadsheet. Values of cable materials properties are available in Table 3-4. Do not select any material, this action will change the $\dot{m}''$ and $\Delta H_{c,eff}$ values previously entered.

Results*

Radiation Model	Radiant Heat Flux $\dot{q}''$ kW (Btu/ft^2-sec)	Cable Failure
Solid Flame	0.60 (0.05)	No, $\dot{q}''_r < \dot{q}''_{critical}$

*see spreadsheet on next page

Spreadsheet Calculations

CHAPTER 5 - METHOD OF ESTIMATING RADIANT HEAT FLUX FROM FIRE TO A TARGET FUEL ABOVE GROUND LEVEL UNDER WIND-FREE CONDITION SOLID FLAME RADIATION MODEL

The following calculations estimate the radiative heat flux from fire to a target fuel.
The purpose of this calculation is to estimate the radiation transmitted from a burning fuel array to a target fuel positioned some distance from the fire above ground level to determine if secondary ignitions are likely with no wind.
Parameters should be specified ONLY IN THE RED INPUT PARAMETER BOXES.
All subsequent output values are calculated by the spreadsheet and based on values specified in the input parameters. This spreadsheet is protected and secure to avoid errors due to a wrong entry in a cell(s).
The chapter in the guide should be read before an analysis is made.

INPUT PARAMETERS

Mass Burning Rate of Fuel (m'')	0.0037	kg/m^2-sec	
Effective Heat of Combustion of Fuel ($\Delta H_{c,eff}$)	28300	kJ/kg	
Fuel Area or Dike Area (A_{dike})	20.00	ft^2	1.86 m^2
Distance between Fire and Target (L)	9.00	ft	2.7432 m
Vertical Distance of Target from Ground ($H_1 = H_{f1}$)	6.00	ft	1.8288 m

THERMAL PROPERTIES DATA

Select Fuel Type

Methanol

Scroll to desired fuel type then Click on selection

BURNING RATE DATA FOR FUELS

Fuel	Mass Burning Rate m'' (kg/m^2-sec)	Heat of Combustion $\Delta H_{c,eff}$ (kJ/kg)	Density ρ (kg/m^3)
Methanol	0.017	20,000	796
Ethanol	0.015	26,800	794
Butane	0.078	45,700	573
Benzene	0.085	40,100	874
Hexane	0.074	44,700	650
Heptane	0.101	44,600	675
Xylene	0.09	40,800	870
Acetone	0.041	25,800	791
Dioxane	0.018	26,200	1035
Diethy Ether	0.085	34,200	714
Benzine	0.048	44,700	740
Gasoline	0.055	43,700	740
Kerosine	0.039	43,200	820
Diesel	0.045	44,400	918
JP-4	0.051	43,500	760
JP-5	0.054	43,000	810
Transformer Oil, Hydrocarbo	0.039	46,000	760
Fuel Oil, Heavy	0.035	39,700	970
Crude Oil	0.0335	42,600	855
Lube Oil	0.039	46,000	760
Douglas Fir Plywood	0.01082	10,900	500

Reference: *SFPE Handbook of Fire Protection Engineering*, 2nd Edition, 1995, Page 3-2.

ESTIMATING RADIATIVE HEAT FLUX TO A TARGET FUEL

Reference: *SFPE Handbook of Fire Protection Engineering*, 3rd Edition, 2002, Page 3-276.

SOLID FLAME RADIATION MODEL

$q'' = EF_{1\to2}$

Where
q'' = incident radiative heat flux on the target (kW/m^2)
E = emissive power of the pool fire flame (kW/m^2)
$F_{1\to2}$ = view factor between target and the flame

Pool Fire Diameter Calculation

$A_{dike} =$ $\pi D^2/4$

$D =$ $\sqrt{(4\ A_{dike}/\pi)}$

$D =$ 1.54 m

Emissive Power Calculation

$E =$ $58\ (10^{-0.00823\ D})$

$E =$ 56.33 (kW/m^2)

View Factor Calculation

$F_{1\to2,V1} =$ $1/(\pi S)\tan^{-1}(h_1/(S^2-1)^{1/2})-(h_1/\pi S)\tan^{-1}((S-1)/(S+1))^{1/2}+A_1h_1/\pi S(A_1^2-1)^{1/2}\tan^{-1}((A_1+1)(S-1)/(A_1-1)(S+1))^{1/2}$

$F_{1\to2,V2} =$ $1/(\pi S)\tan^{-1}(h_2/(S^2-1)^{1/2})-(h_2/\pi S)\tan^{-1}((S-1)/(S+1))^{1/2}+A_2h_2/\pi S(A_2^2-1)^{1/2}\tan^{-1}((A_2+1)(S-1)/(A_2-1)(S+1))^{1/2}$

$A_1 =$ $(h_1^2+S^2+1)/2S$

$A_2 =$ $(h_2^2+S^2+1)/2S$

$B =$ $(1+S^2)/2S$

$S =$ $2R/D$

$h_1 =$ $2H_{f1}/D$

$h_2 =$ $2H_{f2}/D$

$F_{1\to2,V} =$ $F_{1\to2,V1} + F_{1\to2,V2}$

Where $F_{1\to2,V}$ = total vertical view factor
R = distance from center of the pool fire to edge of the target (m)
H_f = height of the pool fire flame (m)
D = pool fire diameter (m)

Distance from Center of the Pool Fire to Edge of the Target Calculation

$R = L+D/2 =$ 3.512 m

Heat Release Rate Calculation

$Q = m''\Delta H_c A_f$

$Q =$ 194.56 kW

Pool Fire Flame Height Calculation

$H_f = 0.235\ Q^{2/5}-1.02\ D$

$H_f =$ 0.366 m

$S = 2R/D =$	4.567							
$h_1 = 2H_{f1}/D =$	2.378							
$h_2 = 2H_{f2}/D =$	$2(H_f-H_{f1})/D =$	-1.902						
$A_1 = (h_1^2+S^2+1)/2S =$		3.012						
$A_2 = (h_2^2+S^2+1)/2S =$		2.789						
$B = (1+S^2)/2S =$		2.393						
			F_{V1}	F_{V2}	F_{V3}	F_{V4}	$F_{1\to2,V1}$	
$F_{1\to2,V1} =$	0.071		0.034	0.112	0.176	0.848	0.071	
$F_{1\to2,V2} =$	-0.061	F_{V1}	F_{V2}	F_{V3}	F_{V4}	$F_{1\to2,V2}$		
$F_{1\to2,V} = F_{1\to2,V1} + F_{1\to2,}$	0.010		-0.028	-0.089	-0.142	0.861	-0.061	

Radiative Heat Flux Calculation

$q'' = EF_{1\to2}$

q'' =	0.57 kW/m^2	0.05 BTU/ft^2-sec	**ANSWER**

CRITICAL HEAT FLUX FOR CABLES FAILURE

Cable Type	Damage Threshold (kW/m^2)	Heat Flux
IEEE-383 qualified	10	
IEEE-383 unqualified	5	

Reference: EPRI 100370, Fire-Induced Vulnerability Evaluation (FIVE), April 1992, page 10.4-7.

NOTE

The above calculations are based on principles developed in the SFPE Handbook of Fire Protection Engineering, 3rd Edition, 2002.

Calculations are based on certain assumptions and have inherent limitations. The results of such calculations may or may not have reasonable predictive capabilities for a given situation, and should only be interpreted by an informed user.

Although each calculation in the spreadsheet has been verified with the results of hand calculation, there is no absolute guarantee of the accuracy of these calculations.

Any questions, comments, concerns, and suggestions, or to report an error(s) in the spreadsheet, please send an email to nxi@nrc.gov.

NRR

Office of Nuclear Reactor Regulation

This page intentionally left blank.

CHAPTER 6. ESTIMATING THE IGNITION TIME OF A TARGET FUEL EXPOSED TO A CONSTANT RADIATIVE HEAT FLUX

6.1 Objectives

This chapter has the following objectives:

- Explain the importance of the location of the ignition source.
- Explain the importance of the position, spacing, and orientation of the fuel(s).
- Describe ignition parameters.
- Discuss how to calculate ignition time.
- Define relevant terms, including ignition temperature, flash point, piloted ignition, and non-piloted ignition.

6.2 Introduction

When performing an FHA, it is essential to understand ignition of materials since the ignition of a combustible material is typically the first step in any fire scenario. Moreover, once a fire starts, the ignition delay times of other materials, coupled with flame spread, will affect the rate at which the fire spreads and develops. Thus, secondary ignition of other materials is another important step in fire development.

Theories regarding ignition and flame spread on solids are based on the concept of a critical surface temperature called the ignition temperature, T_{ig}. This critical surface temperature is related to the flash point (the lowest temperature at which a flammable vapor/air mixture exists at the surface) in the ignition of liquids for the case of piloted ignition, or the auto-ignition temperature if no pilot is present. The flash point phenomenon can be observed with solids under conditions of surface heating, but cannot be defined in terms of a bulk temperature. Because solid fuel must decompose to create fuel vapors (rather than simply evaporating), there is not a unique flash point temperature for a solid fuel. Both piloted ignition and auto-ignition occur in an identical fashion for the evaporated or decomposed fuel gases of liquid and solid fuels, respectively, as illustrated in Figure 6-1.

For ignition to occur, the solid fuel must be heated sufficiently to vaporize and form a flammable pre-mixed system (see Figure 6-2). An ignition source, such as a spark or small flame must also be present, for piloted ignition or the gas mixture must be heated sufficiently to cause auto-ignition. The critical surface temperature at which these ignitions occur is called the ignition temperature, T_{ig}. Piloted ignition requires a much lower temperature than auto-(or spontaneous) ignition. For example, wood has a typical piloted ignition temperature of 350 °C (662 °F) and is 600 °C (1,112 °F) for auto-ignition. Ignition temperature can be considered to be a property of the solid, but it is not truly constant and can vary with the rate of heating.

Heating of solids to ignition can be accomplished by radiation from flames or hot gases, by flame contact, or by contact with hot gases. In any of these cases, the measure of the severity of the heating sources is the heat flux, usually measured in kW/m^2 (Btu/ft^2-sec). Table 6-1 lists typical heat fluxes from various sources, which clearly show the significance of radiation in fires.

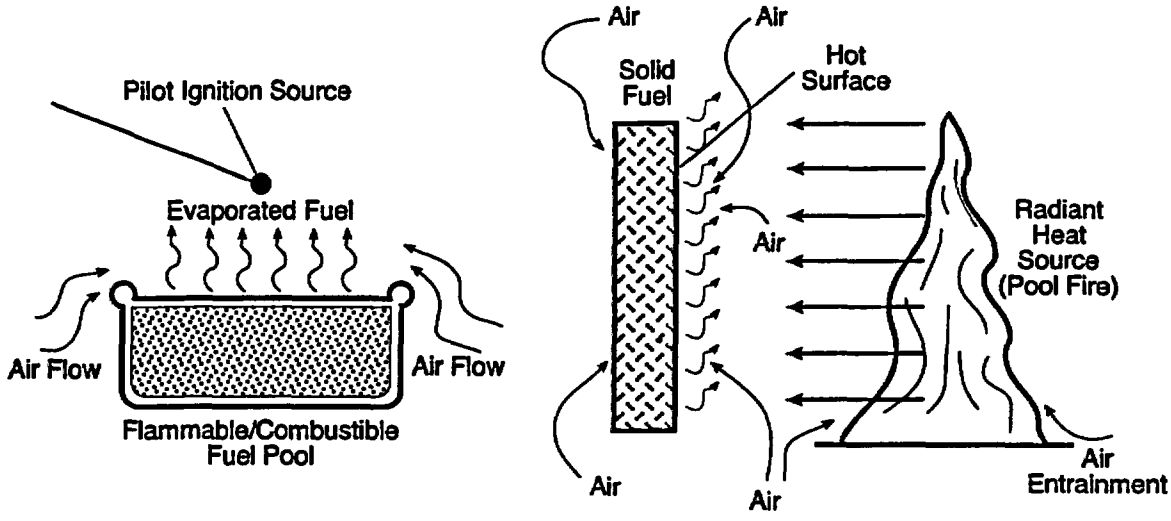

Figure 6-1 Ignition Processes for Liquid and Solid Fuels

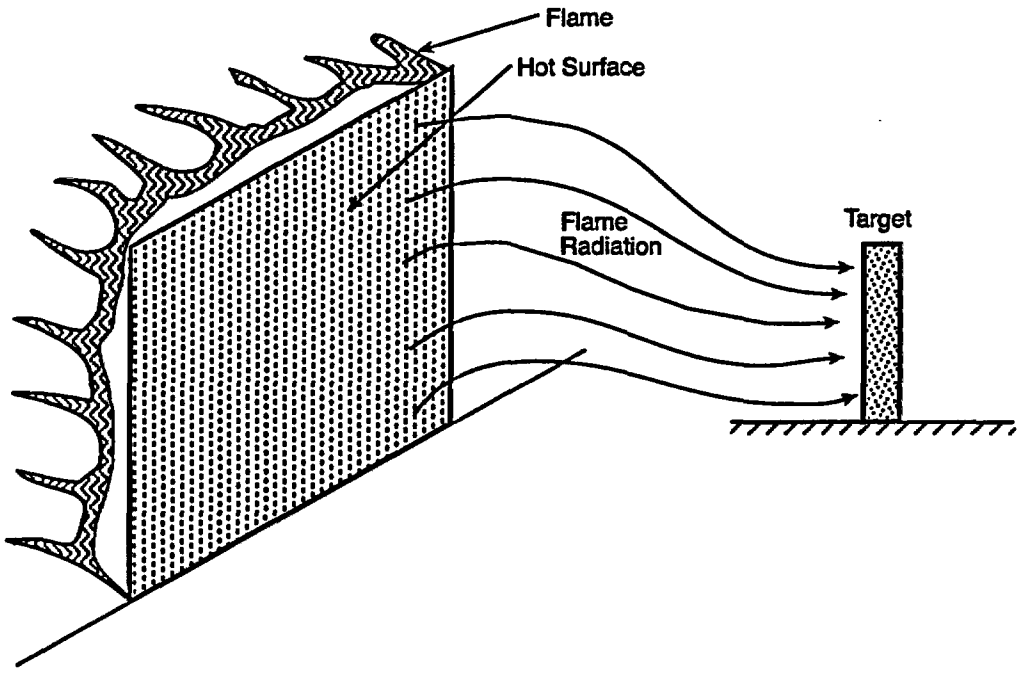

Figure 6-2 Radiation to a Solid Target Object from a Flame or a Hot Surface at Elevated Temperature

Table 6-1. Typical Heat Fluxes from Various Sources		
Source	Heat Flux Range (kW/m^2)	Comment
Flame radiation	0–200	Depends on size of flame and distance from the flame
Flame convection	10–20	Direct flame contact
Hot gas convection	0–10	Direct gas contact
Hot gas radiation	1–150	Depends on gas temperature, soot concentration, and distance from hot gases

6.3 Ignition Sources and Fire Development

An ignition source can consist of a spark with a low energy content, a heated surface, or a large pilot flame. The source of energy can be chemical, electrical, or mechanical. The greater the energy of the ignition source, the faster the fire will subsequently grow on the fuel source surface. A spark or a glowing cigarette may initiate smoulder combustion, which may continue to smoulder for a long time before flaming combustion begins. The smouldering often producing low heat but considerable amounts of toxic gases. A pilot flame usually produces flaming combustion and results in quicker flame spread and fire growth.

The location of the ignition source is also very important. For example, a pilot flame positioned at the lower end of a window curtain may cause rapid upward flame spread and fire growth. By contrast, the same pilot flame placed at the top of the curtain would cause much slower fire growth with a slow, downward flame spread.

The position of the fuel can also have a marked effect on fire development. If the fuel is burning away from walls, the cool air is entrained into the plume from all directions. When the fuel is close to a wall, however, the entrainment of cold air is limited; this causes higher temperatures and higher flames since combustion must take place over a greater distance.

The spacing and orientation of the fuels are also important. The spacing in the compartment determines, to a considerable extent, how quickly the fire spreads between the fuel packages. Upward flame spread on a vertically oriented fuel surface will occur more rapidly than lateral spread along a horizontally oriented fuel surface. Similarly, a fuel package with a large surface area will burn more rapidly than an otherwise equivalent fuel package with a small surface area. A pile of wooden sticks, for example, will burn more rapidly than a single log of wood of the same mass.

6.4 Ignition Time for Thermally Thick Materials

Ignition time can be computed by calculating the time to achieve sufficient vaporization to result in a flammable mixture plus the time for the mixture to ignite. Except for cases of low ambient oxygen, the gas phase process is much faster than the heating time of a solid. Typical values of sufficient mass loss rates (burning rates) to enable ignition are on the order of 2 to 6 g/m^2. These

values are associated with the initiation of pyrolysis (combustion). Hence, ignition time for a solid can be effectively computed by simple heat conduction theory. The surface of the solid must be heated to its ignition temperature, T_{ig}. Table 6-2 lists measured ignition times for typical thick solid fuels.

Table 6-2. Typical Ignition Times of Thick Solid Fuels
(Quintiere, 1997) (Waiting for copyright permission)

The steady-state surface temperature of a thermally thick fuel is independent of the material's physical properties. The rate of heating and the time required to reach steady-state are material dependent. At steady-state, the incident heat is entirely lost to the surrounding surface by convection and re-radiation, but the temperature of the fuel remains constant. The heat flux required to adjust the surface temperature to the ignition temperature, T_{ig}, is known as the critical heat flux (CHF). Ignition or flame spread is not possible below the threshold level of heating represented by the CHF.

6.4.1 Method of Tewarson

As a fuel surface is exposed to heat flux, most of the heat is transferred to the interior of the material. The ignition principle suggests that the rate with which heat is transferred depends on the ignition temperature (T_{ig}), ambient temperature, (T_a), material thermal conductivity (k), material specific heat (c), and the material density (ρ). The combined effects are expressed by a parameter defined as the thermal response parameter (TRP), of the material as follows (Tewarson, 1995):

$$TRP = \Delta T_{ig}\sqrt{k\rho c} \qquad (6\text{-}1)$$

Where:

TRP = Thermal Response Parameter (kW-sec$^{1/2}$/m^2)
$\Delta T_{ig} = (T_{ig} - T_a)$ = ignition temperature above ambient (K)
k = material thermal conductivity (kW/m-K)
c = material specific heat (kJ/kg-K)

ρ = material density (kg/m^3)

TRP is a useful parameter for engineering calculations to assess resistance to ignition and flame spread. The important material variables in the above equation are $k\rho c$. These variables combine to form a material's thermal inertia. (See Chapter 2, Section 2.6.1 for a more detailed discussion of thermal inertia.) For most materials, c does not vary significantly, and the thermal conductivity is largely a function of the material density. This means that density is the most important material property. Low density material are excellent thermal insulator because heat does not readily pass the material, the surface of the material actually heat more rapidly and, as a result can be ignited more quickly. For thin materials, the weight or thickness of the material plays an important role.

The ignition principle suggests that, for thermally thick materials, the inverse of the square root of ignition time is expected to be a linear function of the external heat flux away from the CHF value (Tewarson, 1995):

$$\sqrt{\frac{1}{t_{ig}}} = \frac{\sqrt{\frac{4}{\pi}\left(\dot{q}_e'' - CHF\right)}}{TRP} \qquad (6\text{-}2)$$

$$t_{ig} = \frac{\pi}{4}\left(\frac{TRP}{\dot{q}_e'' - CHF}\right)^2 \qquad (6\text{-}3)$$

Where:

t_{ig} = ignition time (sec)
$\dot{q}_e''$ = external heat flux (kW/m^2)
CHF = critical heat flux for ignition (kW/m^2)
TRP = thermal response parameter (kW-sec$^{1/2}$/m^2)

The above equation applies to the transient period (before steady-state). Most common materials behave as thermally thick materials and satisfy Equation 6-3, the CHF and TRP values for materials derived from the ignition data measured in the Flammability Apparatus. The Flammability Apparatus, a commercial instrument designed by the Factory Mutual Research Corporation (FMRC) for measuring bench-scale HRR based on the oxygen consumption calorimetry. The CHF and TRP values for various materials derived from the ignition data measured in the Flammability Apparatus are listed in Table 6-3. The CHF are extrapolated from the experimental correlation when the time to ignition goes infinity, thus making CHF dependent on the model used for correlating the data. The minimum heat flux for ignition should not be confused with the CHF for ignition. Jenssens (1991) defined minimum heat flux for ignition and CHF for ignition as follows:

- Minimum heat flux for ignition is the heat flux below which ignition under practical condition (in bench-scale test or real-scale test cannot occur.

- CHF for ignition is an estimate of minimum heat flux derived from a correlation of experimental data.

Table 6-3. Critical Heat Flux and Thermal Response Parameters of Selected Materials (Tewarson, 1995) (Waiting for copyright permission)		

For first order approximation of ignition of solids, this discussion is highly simplified and ignores several secondary aspects of the process. Nevertheless, the discussion shows that two properties of a thick solid fuel significantly affect its ignition behavior. The ignition temperature of the solid

is clearly important and reflects the thermal stability of the material. Ignition temperature can be thought of as a chemical property. Materials that are thermally stable are difficult to ignite and exhibit higher ignition temperatures. The primary physical property of the material is its density. The surface of low density material heats more rapidly, causing more rapid ignition of the material. Table 6-4 summarizes typical ignition data for various materials.

Table 6-4. Ignition Temperature and Thermal Properties of Materials (Quintiere, 1997) (Waiting for copyright permission)

To obtain ignition time, several correlations are available in the literature. Although each correlation uses the CHF and critical surface temperature criterion, each technique correlates the data differently resulting in method-specific values for pseudo material properties required in the analysis. Four more techniques are presented for calculating the time to ignition for thermally thick materials under constant radiative heat flux. These methods are based on the principles from SFPE Engineering Guide, "Piloted Ignition of Solid Materials Under Radiant Exposure".

6.4.2 Method of Mikkola and Wichman (SFPE Engineering Guide, 2002)

The time to ignition can be calculated using following correlation:

$$t_{ig} = \frac{\pi}{4} \; k\rho c \frac{\left(T_{ig} - T_a\right)^2}{\left(\dot{q}_r'' - \dot{q}_{crit}''\right)^2} \qquad (6\text{-}4)$$

Where:

t_{ig} = ignition time (sec)
$k\rho c$ = material thermal inertia $(kW/m^2\ K)^2$-sec
T_{ig} = ignition temperature (°C)

T_a = ambient air temperature (°C)
$\dot{q}''_r$ = external heat flux (kW/m²)
$\dot{q}''_{crit}$ = critical heat flux for ignition (kW/m²)

6.4.3 Method of Qunitiere and Harkleroad (SFPE Engineering Guide, 2002)

The time to ignition can be calculated using following correlation:

$$t_{ig} = \left(\frac{\dot{q}''_{min}}{b \ \dot{q}''_r} \right)^2 \qquad (6\text{-}5)$$

Where:
t_{ig} = ignition time (sec)
$\dot{q}''_{min}$ = minimum heat flux (kW/m²)
$\dot{q}''_r$ = critical heat flux for ignition (kW/m²)
b = flame spread parameter (1/ √sec)

6.4.4 Method of Janssens (SFPE Engineering Guide, 2002)

The time to ignition can be calculated using following correlation:

$$t_{ig} = 0.563 \left(\frac{k\rho c}{h_{ig}^2} \right) \left(\frac{\dot{q}''_e}{\dot{q}''_{crit}} - 1 \right)^{-1.83} \qquad (6\text{-}6)$$

Where:
t_{ig} = ignition time (sec)
$k\rho c$ = material thermal inertia (kW/m² K)²-sec
h_{ig} = heat transfer coefficient at ignition (kW/m²-K)
$\dot{q}''_e$ = external heat flux (kW/m²)
$\dot{q}''_{crit}$ = critical heat flux for ignition (kW/m²)

The above three correlations used the material properties listed in Table 6-5.

Table 6-5. Ignition and Flame Spread Properties of Materials (SFPE Engineering Guide, 2002)				
Materials	Ignition Temperature T_{ig} (°C)	Thermal Inertia kpc (kW/m² K)²-sec	Minimum Heat Flux for Ignition $\dot{q}''_{min}$ (kW/m²)	Flame Spread Parameter b (1/ √sec)
PMMA Polycast (1.59mm)	278	0.73	9	0.04
Hardboard (6.35 mm)	298	1.87	10	0.03
Carpet (Arcylic)	300	0.42	10	0.06
Fiber Insulation Board	355	0.46	14	0.07
Hardboard (3.175mm)	365	0.88	14	0.05
PMMA Type G (1.27 cm)	378	1.02	15	0.05
Asphalt Shingle	378	0.7	15	0.06
Douglas Fir Particle Board (1.27 cm)	382	0.94	16	0.05
Plywood Plain (1.27 cm)	390	0.54	16	0.07
Plywood Plain (0.635 cm)	390	0.46	16	0.07
Foam Flexible (2.54 cm)	390	0.32	16	0.09
GRP (2.24 mm)	390	0.32	16	0.09
Hardboard (Gloss Paint) (3.4 mm)	400	1.22	17	0.05
Hardboard (Nitrocellulose Paint)	400	0.79	17	0.06
GRP (1.14 mm)	400	0.72	17	0.06
Particle Board (1.27 cm Stock)	412	0.93	18	0.05
Carpet (Nylon/Wool Blend)	412	0.68	18	0.06

Table 6-5. Ignition and Flame Spread Properties of Materials (continued) (SFPE Engineering Guide, 2002)				
Materials	Ignition Temperature T_{ig} (°C)	Thermal Inertia $k\rho c$ $(kW/m^2\ K)^2$-sec	Minimum Heat Flux for Ignition $\dot{q}''_{min}$ (kW/m^2)	Flame Spread Parameter b $(1/\sqrt{sec})$
Gypsum Board, Wallboard (S142M)	412	0.57	18	0.07
Carpet # 2 (Wool Untreated)	435	0.25	20	0.11
Foam, Rigid (2.54 cm)	435	0.03	20	0.32
Fiberglass Shingle	445	0.5	21	0.08
Polyisocyanurate (5.08 cm)	445	0.02	21	0.36
Carpet # 2 (Wool Treated)	455	0.24	22	0.12
Carpet # 1 (Wool, Stock)	465	0.11	23	0.18
Aircraft Panel Epoxy Fiberite	505	0.24	28	0.13
Gypsum Board FR (1.27 cm)	510	0.4	28	0.1
Polycarbonate (1.52 mm)	528	1.16	30	0.06
Gypsum Board (Common) (1.52 mm)	565	0.45	35	0.11
Plywood FR (1.27 cm)	620	0.76	44	0.1
Polystyrene (5.08 cm)	630	0.38	46	0.14

6.4.5 Method of Toal, Silcock, and Shields (SFPE Engineering Guide, 2002)

The time to ignition can be calculated using following correlation:

$$t_{ig} = \frac{FTP_n}{\left(\dot{q}''_r - \dot{q}''_{crit}\right)^n} \qquad (6\text{-}7)$$

Where:

t_{ig} = ignition time (sec)
FTP = flux time product (kW-sec/m^2)^n
$\dot{q}''_r$ = exposure or external heat flux (kW/m^2)
$\dot{q}''_{crit}$ = critical heat flux for ignition (kW/m^2)
n = flux time product index (n ≥1)

Equation 6-7 used the material properties listed in Table 6-6.

Table 6-6. Ignition and Flame Spread Properties of Materials (SFPE Engineering Guide, 2002)

Materials	Flux Time Product FTP (kW-sec/m^2)^n	Critical Heat Flux $\dot{q}''_{crit}$ (kW/m^2)	Flux Time Product Index n
Chipboard	5,370	6.4	1.49
Chipboard (Horizontal) (15 mm)	9,921	9	1.7
Chipboard (Vertical) (15 mm)	11,071	10	1.7
Fiberboard	3,981	8.3	1.66
Hardboard	8,127	8.1	1.49
Hardboard (Painted Gloss)	9,332	8.1	1.51
Hardwood	2,818	8.1	1.5
Plywood	6,164	10.6	1.51
Plywood (Horizontal) (12 mm)	5,409	8.5	1.5
Plywood (Vertical) (12 mm)	42,025	10	2

Table 6-6. Ignition and Flame Spread Properties of Materials (continued) (SFPE Engineering Guide, 2002)			
Materials	Flux Time Product FTP $(kW\text{-}sec/m^2)^n$	Critical Heat Flux $\dot{q}''_{crit}$ (kW/m^2)	Flux Time Product Index n
Plywood (Painted Gloss)	6,761	11.4	1.5
PMMA (Cast) (3mm)	3,100	5	1.25
PMMA (Extruded) (2 mm)	1,290	9	1
Polyethylene (2mm)	2,220	12.5	1
Polypropylene (3.3 mm)	8,110	6.5	1.5
PVC (Extruded Gray) (3 mm)	5,130	15	1.5
PVC (Pressed White) (3 mm)	95,000	8	2
Softwood	5,130	13.7	1.53
Softwood (Horizontal) (20 mm)	44,079	10	2.2
Softwood (Vertical) (20 mm)	16,502	12	1.9
Softwood Intumescent Paint	4,569	13	1.5

6.5 Assumptions and Limitations

The methods discussed in this chapter are subject to several assumptions and limitations.

(1) For ignition to occur, a solid material must be heated sufficiently to vaporize and form a flammable mixture.

(2) Ignition occurs when the surface reaches a critical temperature defined as the ignition temperature.

(3) A heat source must be present to ignite the solid.

(4) The solid is assumed to be infinitely thick.

(5) The methods are all derived through the solid with radiating heating on the surface.

6.6 Required Input for Spreadsheet Calculations

(1) Target fuel type (material)

(2) Exposed radiative heat flux to target (kW/m^2)

6.7 Cautions

(1) Use (Ignition_Time_Calculations.xls) spreadsheet on the CD-ROM for calculations.

(2) Make sure to enter to use correct parameters in the correct units.

6.8 Summary

This chapter discusses ignition phenomenon associated with thermally thick materials as well as material properties that have major effects on ignition and flame spread. For thin materials, the weight or thickness of the material plays a very important role. For thick materials, the density of the material has a major impact on ignition and flame spread rates.

6.9 References

Quintiere, J.G., *Principles of Fire Behavior*, Delmar Publishers, Albany, New York, 1997.

SFPE Engineering Guide, "Piloted Ignition of Solid Materials Under Radiant Exposure," Society of Fire Protection Engineers, Bethesda, Maryland, January 2002.

Tewarson, A., "Generation of Heat and Chemical Compounds in Fires," Section 3, Chapter 4, *SFPE Handbook of Fire Protection Engineering*, 2nd Edition, P.J. DiNenno, Editor-in-Chief, National Fire Protection Association, Quincy, Massachusetts, 1995.

6.10 Additional Readings

Fire Dynamics, Course Guide, Federal Emergency Management Agency (FEMA), United States Fire Administration (USFA), National Emergency Training Center, Emmitsburg, Maryland, 1995.

Janssens, M.L., "Fundamental Thermophysical Characteristics of Wood and their Role in Enclosure Fire Growth," Doctor of Philosophy Dissertation, University of Gent, Belgium, September 1991.

Karlsson, B., and J.G. Quintiere, *Enclosure Fire Dynamics*, Chapter 2, "A Qualitative Description of Enclosure Fires," CRC Press LLC, New York, pp. 11–24, 1999.

This page intentionally left blank.

6.11 Problems

Example Problem 6.11-1

Problem Statement

Calculate the ignition time for a PVC/PE power cable, assuming that a 6.5 ft (2 m) diameter pool fire produces an 25 kW/m^2 heat flux.

Solution

Purpose:
(1) Calculate the ignition time for a PVC/PE power cable.

Assumptions:
(1) The material is infinitely thick

Spreadsheet (FDT^s) Information:
Use the following FDT^s:
(a) Ignition_Time_Calculations.xls (click on *Ignition_Time _Calculations3*)

FDT^s Input Parameters:
-Exposure or External Radiative Heat Flux to Target Fuel $(\dot{q}_e^{''})$ = 25 kW/m^2
-Click on the option botton (⊙) for Electrical Cables - Power
-Select Material: **PVC/PE**

Results*

Material	**Ignition Time (t_{ig})** (min.) Method of Tewarson
PVC/PE	9.0

*see spreadsheet on next page

Spreadsheet Calculations

CHAPTER 6 - METHOD OF ESTIMATING THE IGNITION TIME OF A TARGET FUEL EXPOSED TO A CONSTANT RADIATIVE HEAT FLUX

The following calculations estimate time to ignition for flame spread of solid fuels exposed to a constant external radiative heat flux.
Parameters should be specified ONLY IN THE YELLOW INPUT PARAMETER BOXES.
All subsequent output values are calculated by the spreadsheet and based on values specified in the input parameters.
This spreadsheet is protected and secure to avoid errors due to a wrong entry in a cell(s).
The chapter in the guide should be read before an analysis is made.

INPUT PARAMETERS

Exposure or External Radiative Heat Flux to Target Fuel (q''_e)	25.00	kW/m^2
Target Critical Heat Flux (CHF)	15.00	kW/m^2
Target Thermal Response Parameter (TRP)	263	$kW\text{-}sec^{1/2}/m^2$

CRITICAL HEAT FLUX AND THERMAL RESPONSE PARAMETER FOR MATERIALS

Materials	Critical Heat Flux (CHF) (kW/m^2)	Thermal Response Parameter (TRP) ($kW\text{-}sec^{1/2}/m^2$)
Electrical Cables - Power		
PVC/PVC	19.00	248.5
PE/PVC	15.00	232.5
PVC/PE	15.00	263
Silicone/PVC	19.00	212
Silicone/crosslinked polyolefin (XLPO)	27.50	446
EPR (ethylene-propylene rubber/EPR)	21.50	517
XLPE/XLPE	22.50	329.5
XLPE/EVA (ethyl-vinyl acetate)	17.00	472.5
XLPE/Neoprene	15.00	291
XLPO/XLPO	20.50	498
XLPO, PVF (polyvinylidine fluoride)/XLPO	15.50	528
EPR/Chlorosulfonated PE	16.50	349.5
EPR, FR	21.00	358.5
Electrical Cables - Communications		
PVC/PVC	15.00	131
PE/PVC	20.00	183
XLPE/XLOP	20.00	498
SI/XLOP	20.00	457
EPR-FR	19.00	295
Chlorinated PE	12.00	217
ETFE/EVA	22.00	454
PVC/PVF	30.00	264
FEP/FEP	38.00	645
Synthetic Materials		
Polypropylene	15.00	193
Nylon	15.00	270
Polymethylmethacrylate (PMMA)	11.00	274
Polycarbonate	15.00	331
Polycarbonate panel	16.00	420
Natural Materials		
Wood (red oak)	10.00	134
Wood (douglas fir)	10.00	138
Wood (douglas fir/fire retardant, FR)	10.00	251
Corrugated paper (light)	10.00	152

Reference: SFPE Handbook of Fire Protection Engineering, 2nd Edition, 1995, Page 3-53.

Select Material: PVC/PE
Scroll to desired material then click on selection

Select Material: PVC/PVC
Scroll to desired material then click on selection

Select Material:
Scroll to desired material then click on selection

Select Material:
Scroll to desired material then click on selection

ESTIMATING IGNITION TIME FOR COMBUSTIBLES
METHOD OF TEWARSON
THERMALLY THICK MATERIALS

Reference: *SFPE Handbook of Fire Protection Engineering*, 2nd Edition, 1995, Page 3-55.

$v(1/t_{ig}) = (v(4/\pi)(q''_e - CHF))/TRP$

$t_{ig} = (\pi/4)(TRP)^2/(q''_e - CHF)^2$

Where

t_{ig} = target ignition time (sec)

q''_e = external radiative heat flux to target (kW/m^2)

CHF = critical heat flux of target material (kW/m^2)

TRP = thermal response parameter of target material ($kW\text{-}sec^2/m^2$)

$t_{ig} = (\pi/4)(TRP)^2/(q''_e - CHF)^2$

t_{ig} = 543.25 sec 9.05 minutes

ANSWER

NOTE

The above calculations are based on principles developed in the SFPE Handbook of Fire Protection Engineering, 2nd Edition 1995.

Calculations are based on certain assumptions and have inherent limitations. The results of such calculations may or may not have reasonable predictive capabilities for a given situation, and should only be interpreted by an informed user.

Although each calculation in the spreadsheet has been verified with the results of hand calculation, there is no absolute guarantee of the accuracy of these calculations.

Any questions, comments, concerns, and suggestions, or to report an error(s) in the spreadsheet, please send an email to nxd@nrc.gov.

NRR

Office of Nuclear Reactor Regulation

This page intentionally left blank.

Example Problem 6.11-2

Problem Statement
Determine the time for 2 inch thick Douglas fir plywood to ignite when it is subjected to a flame heat flux of 25 kW/m^2, assuming the surface of the plywood is initially at 68°F (20°C).

Solution

Purpose:
(1) Calculate the ignition time of Douglas fir plywood.

Assumptions:
(1) The material is infinitely thick

Spreadsheet (FDT^s) Information:

Use the following FDT^s:
(a) Ignition_Time_Calculations.xls (click on *Ignition_Time _Calculations3*)

FDT^s Input Parameters:

-Exposure or External Radiative Heat Flux to Target Fuel $\left(\dot{q}_e''\right) = 25$ kW/m^2

-Click on the option botton (⊙) for Natural Materials
-Select Material: **Wood (Douglas fir)**

Note: The ignition time calculation method (Tewarson) provided in the spreadsheet *Ignition_Time _Calculations3* does not required the material thickness nor initial surface temperature, therefore material thickness and temperature are additional information only. But, if the initial temperature of the material is relatively high (compare with ambient temperature range), the ignition time value definitely will not be realistic based on this method. Also, we are assuming the material as infinitely thick to use the method, thus we do not have to consider the thickness for this problem.

Results*

Material	Ignition Time (t_{ig}) (min.) Method of Tewarson
Wood (Douglas fir)	111

*see spreadsheet on next page

Spreadsheet Calculations

CHAPTER 6 - METHOD OF ESTIMATING THE IGNITION TIME OF A TARGET FUEL EXPOSED TO A CONSTANT RADIATIVE HEAT FLUX

The following calculations estimate time to ignition for flame spread of solid fuels exposed to a constant external radiative heat flux.
Parameters should be specified ONLY IN THE YELLOW INPUT PARAMETER BOXES.
All subsequent output values are calculated by the spreadsheet and based on values specified in the input parameters.
This spreadsheet is protected and secure to avoid errors due to a wrong entry in a cell(s).
The chapter in the NUREG should be read before an analysis is made.

INPUT PARAMETERS

Exposure or External Radiative Heat Flux to Target Fuel (q''_e)	25.00	kW/m^2
Target Critical Heat Flux (CHF)	21.00	kW/m^2
Target Thermal Response Parameter (TRP)	368.5	$kW\text{-}sec^{1/2}/m^2$

CRITICAL HEAT FLUX AND THERMAL RESPONSE PARAMETER FOR MATERIALS

Select Material

Materials	Critical Heat Flux (CHF) (kW/m^2)	Thermal Response Parameter (TRP) ($kW\text{-}sec^{1/2}/m^2$)
Electrical Cables - Power		
PVC/PVC	19.00	248.5
PE/PVC	15.00	232.5
PVC/PE	15.00	263
Silicone/PVC	19.00	212
Silicone/crosslinked polyolefin (XLPO)	27.50	448
EPR (ethylene-propylene rubber/EPR)	21.50	517
XLPE/XLPE	22.50	329.5
XLPE/EVA (ethyl-vinyl acetate)	17.00	472.5
XLPE/Neoprene	15.00	291
XLPO/XLPO	20.50	498
XLPO, PVF (polyvinylidine fluoride)/XLPO	15.50	526
EPR/Chlorosulfonated PE	16.50	349.5
EPR, FR	21.00	368.5
Electrical Cables - Communications		
PVC/PVC	15.00	131
PE/PVC	20.00	183
XLPE/XLOP	20.00	498
Si/XLOP	20.00	457
EPR-FR	19.00	295
Chlorinated PE	12.00	217
ETFE/EVA	22.00	454
PVC/PVF	30.00	264
FEP/FEP	36.00	845
Synthetic Materials		
Polypropylene	15.00	193
Nylon	15.00	270
Polymethylmethacrylate (PMMA)	11.00	274
Polycarbonate	15.00	331
Polycarbonate panel	16.00	420
Natural Materials		
Wood (red oak)	10.00	134
Wood (douglas fir)	10.00	138
Wood (douglas fir/fire retardant, FR)	10.00	251
Corrugated paper (light)	10.00	152

Reference: SFPE Handbook of Fire Protection Engineering, 2nd Edition, 1995, Page 3-53.

Select Material

Scroll to desired material then click on selection

Select Material

Scroll to desired material then click on selection

Select Material

Scroll to desired material then click on selection

Select Material

Wood (douglas fir)

Scroll to desired material then click on selection

ESTIMATING IGNITION TIME FOR COMBUSTIBLES
METHOD OF TEWARSON
THERMALLY THICK MATERIALS

Reference: *SFPE Handbook of Fire Protection Engineering*, 2nd Edition, 1995, Page 3-55.

$v(1/t_{ig}) = (v(4/\pi)(q''_e - CHF))/TRP$

$t_{ig} = (\pi/4)(TRP)^2/(q''_e - CHF)^2$

Where

t_{ig} = target ignition time (sec)

q''_e = external radiative heat flux to target (kW/m^2)

CHF = critical heat flux of target material (kW/m^2)

TRP = thermal response parameter of target material (kW-sec^2/m^2)

t_{ig} = $(\pi/4)(TRP)^2/(q''_e - CHF)^2$

t_{ig} = 6665.69 sec 111.09 minutes

ANSWER

NOTE

The above calculations are based on principles developed in the SFPE Handbook of Fire Protection Engineering, 2nd Edition 1995.
Calculations are based on certain assumptions and have inherent limitations. The results of such calculations may or may not have reasonable predictive capabilities for a given situation, and should only be interpreted by an informed user.
Although each calculation in the spreadsheet has been verified with the results of hand calculation, there is no absolute guarantee of the accuracy of these calculations.
Any questions, comments, concerns, and suggestions, or to report an error(s) in the spreadsheet, please send an email to nxi@nrc.gov.

NRR

Office of Nuclear Reactor Regulation

This page intentionally left blank.

CHAPTER 7. ESTIMATING THE FULL-SCALE HEAT RELEASE RATE OF A CABLE TRAY FIRE

7.1 Objectives

This chapter has the following objectives:

- Describe the numerous functions that electrical cables perform in an NPP.
- Explain the factors that determine how a cable will behave in a fire.
- Describe the ways that fires can occur in cable tray installations.
- Discuss the various types of combustion reactions.
- Explain the processes that electrical failures can initiate in a cable tray.

7.2 Introduction

Fires in grouped electrical cable trays pose distinct fire hazards in power generating facilities. In the past, cable tray installations have caused fires that resulted in serious damage to NPPs. In fact, during the 1950s and early 1960s, NPPs in the United States experienced several fires with serious losses propagated by electrical cables. A 1966 NFPA fire hazard study (Hedlund, 1966) described 24 such fires, the most serious of which occurred at the Peach Bottom Atomic Power Station operated by Philadelphia Electric Company. The most important aspect of the NFPA study, however, is that it pointed out (probably for the first time) that *grouped cables can spread flame much faster than individual cables.*

The 1975 fire at the Browns Ferry Nuclear Power Plant (BFNP) operated by the Tennessee Valley Authority (TVA) demonstrated the vulnerability of electric cables installed in an NPP when exposed to elevated temperatures as a result of a fire. In response to the Browns Ferry incident, the NRC's executive director for operations (EDO) established a special review group to identify lessons that can be learned from the event and to make recommendations for the future treatment of cable trays and cable fires (NUREG-0050). After the BFNP fire, the NRC conducted a series of operating plant inspections and thorough reviews of NPP fire protection programs. On the basis of this information, the NRC issued new fire protection requirements in 10 CFR 50.48 and Appendix R to 10 CFR Part 50. The new regulations imposed a minimum set of fire protection program and post-fire safe shutdown (FSSD) requirements.

Electrical cables perform numerous functions in an NPP.

- power cables that supply electricity to motors, transformers, and heaters
- lighting cables that supply electricity to normal lighting fixtures and flourescent lighting ballasts
- control cables that connect plant equipment such as motor-operated valves (MOVs) and motor starters to remote initiating devices (e.g., switches, relays, and contacts)
- instrumentation cables that transmit low-voltage signals between input devices (e.g., readout panels)
- communication cables (telephone lines)
- heat tracing cables.

The primary cables of concern for FSSD of the reactor are typically power, control, and instrumentation cables. The function of a given cable dictates its acceptable operating parameters. These parameters are important because what constitutes acceptable performance of one type of cable at elevated fire temperatures may not be acceptable performance for another (e.g., a cable that demonstrates acceptable performance for power applications at a certain elevated fire temperature may not be acceptable for instrumentation applications at the same temperature).

Power cables are the least susceptible to fire-induced failure. Control cables are more susceptible to such failure than power cables but typically less susceptible than instrument cables, which are often the most easily affected by elevated temperatures and the first to suffer fire-induced failures.

7.3 Cable Tray Fire Burning Mode Classification

Electrical cables constitute a serious fire hazard for NPPs because the combustible polymeric insulation and jacket material are present in large quantities. This large fuel load can cause NPP fires to burn for extended periods. To compound the problem, the combustion of a fully developed cable fire may be incomplete because of the presence of smoke; whereas general building fires on ground level usually burn in the presence of clear air, because smoke escapes through windows and doors before descending to the fuel.

The behavior of cables in a fire depends on a number of factors, including their constituent materials and construction, as well as their location and installation geometry. The component material and the construction of the cable are very important, as is the nature of the given fire. For example, polymer insulated cables are regarded as fire hazards because all organic materials will burn under most fire conditions and will liberate heat and toxic gases (such as carbon monoxide.) Depending on their location and means of installation, cables can contribute to a fire in a number of ways. For example, burning cables can propagate flames from one area to another or they can add to the amount of fuel available for combustion and can liberate smoke containing toxic and corrosive gases. Similarly, the grouped cables could pose a more serious threat in situations where they run through open spaces connecting different parts of an NPP. In these situations, the cables could propagate and spread the fire between compartments. Thus, the hazards associated with burning cables must be considered in the context of the surroundings. Sometimes, cables comprise a very small proportion of the combustible material; in other situations, they can be the major contribution.

Cable tray fires can occur from various sources. The scenarios of concern include (1) a fire within a cable tray (regardless of how it is initiated) and (2) as exposure fire (i.e., a fire that originates outside of the cable tray and subsequently ignites the cable tray). It is common practice to consider only self-ignited cable fires to occur in power cable trays since they carry enough electrical energy for ignition. Control and instrumentation cables typically do not carry enough electrical energy for self ignition.

To determine the behavior of a given type of cable, they are subject to a variety of standard small- and large scale tests. As stated in NUREG/CR-2431, "Burn Mode Analysis of Horizontal Cable Tray Fires," February 1982, the cable fire growth tests performed to date have demonstrated different burn modes in horizontal and vertical configurations. The results of horizontal and vertical cable tray tests showed that jacket or insulation material may melt (thermoplastic) or form a

considerable char (thermoset). The insight gained from the various cable tray fire tests indicate different types of combustion reactions.

- In pyrolysis, flaming was uniform over the outer surface of the cable bundle and throughout the cable bundle. The cable region involved in the fire grew steadily for the duration of the test.

- With smoldering and/or melting, the jacket and/or insulation material melted and coalesced into a large mass, and flaming occurred principally on the outer surface of the fused mass. Fire involvement depended upon the shape and position of the fused mass within the cable tray.

- With deep-seated combustion, the jacket and/or insulation material formed considerable char, and flaming occurred principally on the outer surface of the cable bundle. Flaming was neither continuous or uniform, but rather occurred as sporadic bursts of fire. After the surface flaming subsided, a glowing cable region slowly progressed along the cables with sporadic flaming issuing from the region. The deep-seated fire, as a subclass of smoldering combustion, is defined as having a fuel interior temperature between the fuel vapor and surface autoignition temperatures of the fuel and a fuel surface temperature below the upper or surface autoignition temperature.

- Interior combustion, resultant in uniform flaming over the outer surface and throughout the cable bundle. The cable region involved in the fire grew steadily and continuously, and the surface fire slowly progressed along the cable with sporadic flaming.

7.4 Cable Tray Heat Release Rate

As stated above, cable insulation and jacket material dominates the combustible fuel loading in most NPP areas. Most of this material is found on cables that are routed in extensive cable tray arrays. Review of the literature on cable tray fires indicates that there are no reliable correlations for the rate of heat release from a full-scale fire. The most systematic studies available are those from Tewarson, et al., (1979), and Sumitra (1982). A useful engineering analysis and basic correlation of their data has been prepared by Lee, 1985, who showed that the peak full-scale HRR can be predicted according to the bench-scale HRR measurements. Lee's correlation for the HRR from measured data is based on the following equation:

$$\dot{Q}_{fs} = 0.45 \ \dot{Q}''_{bs} \ A_f \qquad (7\text{-}1)$$

Where:

$\dot{Q}_{fs}$ = full-scale HRR (kW)

$\dot{Q}''_{bs}$ = bench-scale HRR (kW/m^2)

A_f = exposed cable tray area actively pyrolyzing (m^2)

The bench-scale HRR ($\dot{Q}''_c$), is the peak value measured under the heat flux condition of 60 kW/m^2. The pyrolysis or burning area, A_f, can vary with time as a cable fire spreads. For screening purposes, this area can be estimated assuming area of the fuel involved in fire.

The bench-scale HRR data for a number of cable types measured by Tewarson, et al., and Sumitra, are tabulated in Table 7-1. Note that polyethylene/polyvinylchloride (PE/PVC) cables were the most flammable of all cables tested.

Typically, the IEEE-383 qualified cables are thermoset material, while the unqualified cables are constructed of thermoplastic material. Table 7-2 lists commonly found cables.

7.5 Cable Failure Criteria (Critical Temperature and Critical Heat Flux)

Electrical failure can initiate several fire-related processes, such as melting, pyrolysis, gasification, ignition, and combustion of cable. The lower the heat flux requirement to ignite the electrical cables, the greater the fire hazard is in terms of ignition and flame spread.

A quantitative FHA requires a damage threshold for cables exposed to fires. Electrical cables are typically the primary target for most analyses. The two general types of electrical cables that are anticipated in an NPP are qualified and unqualified. These terms respectively refer to cables that pass or fail the fire test defined in the IEEE-383 standard promulgated by the Institute of Electrical and Electronic Engineers (IEEE). A damage threshold temperature of 370 °C (700 °F) and a critical heat flux of 10 kW/m^2 (1 Btu/ft^2-sec) is used in the Fire-Induced Vulnerability Evaluation (FIVE) methodology developed by the Electric Power Research Institute (EPRI) for IEEE-383 qualified cables. By contrast, a failure temperature of 218 °C (425 °F) and a critical heat flux of 5 kW/m^2 (0.5 Btu/ft^2-sec) is used in the FIVE methodology for IEEE-383 unqualified cables for screening purposes. It is conservatively assumed that once the above failure temperature or heat flux is reached at the target (cables), the function of that component will be lost.

7.6 Assumptions and Limitations

The method discussed in this chapter is subject to several assumptions and limitations.

(1) This correlation is based on the data obtained from flaming fire of cable samples.

(2) A more complex cable tray configuration may be present in many NPPs. For very complex cable tray arrays, the above correlation would give a less accurate approximation for the HRR.

(3) The equation should be used to calculate the HRR for any type of cable.

7.7 Required Input for Spreadsheet Calculations

The user must obtain the following information before using the spreadsheet:

(1) cable type (material)

(2) exposed cable tray burning area (ft^2)

Table 7-1. Bench-Scale HRR of a Cable Tray Fire	
Cable Sample	Bench-Scale HRR per Unit Area $\dot{Q}''_{bs}$ (kW/m^2)
ld PE	1,071
PE/PVC	589
XPE/FRXPE	475
XPE/Neoprene	354
PE, PP/Cl.S.PE	345
XPE/Neoprene	302
FRXPE/Cl.S.PE	258
PE, Nylon/PVC, Nylon	231
XPE/Cl.S.PE	204
Silicone, glass braid, asbestos	182
XPE/XPE	178
PE, PP/Cl.S.PE	177
Silicone, glass braid	128
Teflon	98
Cl.S. - Chlorosulfonated; FRXPE - Fire Retardant Crosslinked Polyethylene; PE - Polyethylene; PP - Polypropylene; PVC - Polyvinylchloride; XPE - Crosslinked Polyethylene;	

Table 7-2. Thermoplastic vs. Thermoset Cables
Thermoplastic Cable Construction Allied Chemical's Halar (ethylene copolymer with chlorotrifluoroethylene) DuPont's PFA (perflouroalkoxy branched polymers) Dynamit Nobel's Dyflor (polyvinylidene fluoride) Ethylenetetrafluoroethylene (ETFE) (known as Tefzel®) Fluorinated polyethylene-polypropylene (FEP) (known as Teflon®) Low and high polyethylene (PE) Nylon, chlorinated polyethylene (CPE) Polyvinyl chloride (PVC) Polyvinyl fluoride (PVF) (known as Tedlar®) Polyurethane, polypropylene (PPE) Polytetrafluoroethylene (PTFE) (known as Teflon®) Teflon, and fluorinated polymers such as DuPont's TFE copolymers with ethylene (known as Tefzel®)
Thermoset Cable Construction Cross-linked polyethylene (XLPE) Cross-linked polyolefin (XLPO) Chloroprene rubber (CR) DuPont's Hypalon (Chlorosulphonated polyethylene) Ethylvinyl acetate (EVA) Ethylene propylene rubber (EPR) Nitrile or rubber butadiene nitrite (NBR) Styrene butadiene rubber (SBR) Polybutadiene, neoprene, and silicone rubber

7.8 Cautions

(1) Use (Cable_HRR_Calculations.xls) spreadsheet on the CD-ROM for calculation.

(2) Make sure to enter the input parameters in the correct units.

7.9 Summary

There is currently no direct HRR data available on the burning of full-scale or intermediate-scale cable tray arrays. Available mass loss data, measured in a series of intermediate-scale fires, was used to estimate HRR. The resulting HRR, in turn, was used to developed a predicted method for full-scale fire behavior based on the bench-scale HRR data for cables.

Estimating the HRR, $\dot{Q}_{fs}$, of cables involves the following steps:

(1) Determine the bench-scale HRR, $\dot{Q}''_{bs}$

(2) Calculate the exposed cable tray area, A_f

7.10 References

Fire-Induced Vulnerability Evaluation (FIVE) Methodology, EPRI TR-100370, Electric Power Research Institute, Palo Alto, California, 1992.

Hedlund, C.F., "Grouped Combustible Wire and Cables", *Fire Journal*, Volume 60, pp. 5–8, March 1966.

Lee, B.T., "Heat Release Rate Characteristics of Some Combustibles Fuel Sources in Nuclear Power Plants," NBSIR 85-3195, U.S. Department of Commerce, National Bureau of Standards (NBS), Washington, DC, July 1985.

NUREG-0050, "Recommendations Related to Browns Ferry Fire," Report by Special Review Group, U.S. Nuclear Regulatory Commission, Washington, DC, February 1976.

NUREG/CR-2431,"Burn Mode Analysis of Horizontal Cable Tray Fires," U.S. Nuclear Regulatory Commission, Washington, DC, February 1982.

Sumitra, P.S., "Categorization of Cable Flammability. Part I, Intermediate-scale Fire Tests of Cable Tray Installations", Interim Report NP-1881, EPRI Research Project 1165-1, Factory Mutual Research Corporation, Norwood Massachusetts, 1982.

Tewarson, A., J.L. Lee, and R.F. Pion, "Categorization of Cable Flammability, Part I, Experimental Evaluation of Flammability Parameters of Cables Using Laboratory-Scale Apparatus", EPRI Project RP1165-1, Factory Mutual Research Corporation, Norwood, Massachusetts, 1979.

7.11 Additional Readings

Babrauskas, V., "Burning Rates," Section 3, Chapter 3-1, *SFPE Handbook of Fire Protection Engineering*, 2nd Edition, P.J. DiNenno, Editor-in-Chief, National Fire Protection Association, Quincy, Massachusetts, 1995.

Babrauskas, V., "Free Burning Fires", *Fire Safety Journal*, Volume 11, page 33–51, 1986.

7.12 Problems

Example Problem 7.12-1

Problem Statement

A 32 gallon trash can exposure fire source is located 2 m (6.5 ft) beneath a horizontal cable tray. It is assumed that the trash fire ignites an area of approximately 2 m^2 (21 ft^2) of the cable tray. The cables in the tray are IEEE-383 unqualified and made of PE/PVC insulation material. Compute the full-scale HRR of the PE/PVC cable insulation. The bench-scale HRR of PE/PVC is 589 kW/m^2.

Solution

Purpose:

(1) Calculate the full-scale HRR of the PE/PVC insulation material.

Assumptions:

(1) Lee's correlation is valid for this fire scenario

Spreadsheet (FDT^s) Information:

Use the following FDT^s:

(a) Cable_HRR Calculations.xls

FDT^s Input Parameters:

-Exposure Cable Tray Burning Area (A_f) = 21 ft^2

-Select Material: **PVC/PE** (the one with a bench-scale HRR of 589 kW/m^2)

Results*

Cable Insulation	Full Scale HRR ($\dot{Q}_{fs}$) kW (Btu/sec)
PVC/PE	517 (490)

*see spreadsheet on next page

Spreadsheet Calculations

CHAPTER 7 - METHOD OF ESTIMATING FULL-SCALE HEAT RELEASE RATE OF A CABLE TRAY FIRE

The following calculations estimate the full-scale cable tray heat release rate.
Parameters should be specified ONLY IN THE YELLOW INPUT PARAMETER BOXES.
All subsequent output values are calculated by the spreadsheet and based on values specified in the input parameters. This spreadsheet is protected and secure to avoid errors due to a wrong entry in a cell(s).
The chapter in the guide should be read before an analysis is made.

INPUT PARAMETERS

Cable Bench-Scale HRR (Q_{bs})	589 kW/m²	
Exposed Cable Tray Burning Area (A_f)	21.00 ft²	1.951 m²

HEAT RELEASE RATE DATA FOR CABLE TRAY FIRE

BENCH-SCALE HRR OF CABLE TRAY FIRE

Cable Type	Bench-Scale HRR per Unit Floor Area Q''_{bs} (kW/m²)
Id PE	1071
PE/PVC	589
XPE/FRXPE	475
PE/PVC	395
PE/PVC	359
XPE/Neoprene	354
PE, PP/Cl.S.PE	345
PE/PVC	312
XPE/Neoprene	302
PE, PP/Cl.S.PE	299
PE, PP/Cl.S.PE	271
FRXPE/Cl.S.PE	258
PE, Nylon/PVC, Nylon	231
PE, Nylon/PVC, Nylon	218
XPE/Cl.S.PE	204
Silicone, glass braid, asbestos	182
XPE/XPE	178
PE, PP/Cl.S.PE	177
Silicone, glass braid	128
Teflon	98

Reference: "Categorization of Cable Flammability, Part 1: Laboratory Evaluation of Cable Flammability Parameters," EPRI Research Project 1165-1, NP-1200, Part 1.

Select Cable Type: PE/PVC

Scroll to desired cable type then Click on selection

ESTIMATING FULL-SCALE CABLE TRAY HEAT RELEASE RATE

Reference: *SFPE Handbook of Fire Protection Engineering*, 2nd Edition 1995, Page 3-12.

$Q_{fs} = 0.45\ Q_{bs}\ A_f$

Where Q_{fs} = cable tray full-scale HRR (kW)
Q_{bs} = cable tray bench-scale HRR (kW)
A_f = exposed cable tray burning area (m²)

Heat Release Rate Calculation

$Q_{fs} = 0.45\ Q_{bs}\ A_f$

Q_{fs} = 517.10 kW 490.12 BTU/sec **ANSWER**

NOTE

The above calculations are based on principles developed in the SFPE Handbook of Fire Protection Engineering, 2nd Edition, 1995.
Calculations are based on certain assumptions and has inherent limitations. The results of such calculations may or may not have reasonable predictive capabilities for a given situation, and should only be interpreted by an informed user.
Although each calculation in the spreadsheet has been verified with the results of hand calculation, there is no absolute guarantee of the accuracy of these calculations.
Any questions, comments, concerns, and suggestions, or to report an error(s) in the spreadsheet, please send an email to nxi@nrc.gov.

NRR
Office of Nuclear Reactor Regulation

Example Problem 7.12-2

Problem Statement

A 1.5 ft high stack of untreated wood pallets (exposure fire source) from a recent plant modification ignites and is located 1.5 m (5 ft) beneath a horizontal cable tray. It is assumed that the wood pallets ignite an area of approximately 4 m^2 (43 ft^2) of the cable tray. The cables in the tray are IEEE-383 qualified and made of PE insulation material. Compute the full-scale HRR of PE cable insulation. The bench-scale HRR of PE material is 1,071 kW/m^2

Solution

Purpose:

(1) Calculate the full-scale HRR of the PE insulation material.

Assumptions:

(1) Lee's correlation is valid for this fire scenario

Spreadsheet (FDT^s) Information:

Use the following FDT^s:

(a) Cable_HRR Calculations.xls

FDT^s Input Parameters:

-Exposure Cable Tray Burning Area (A_f) = 43 ft^2

-Select Material: **Id PE**

Results*

Cable Insulation	Full Scale HRR ($\dot{Q}_{fs}$) kW (Btu/sec)
Id PE	1,925 (1,825)

*see spreadsheet on next page

Spreadsheet Calculations

CHAPTER 7 - METHOD OF ESTIMATING FULL-SCALE HEAT RELEASE RATE OF A CABLE TRAY FIRE

The following calculations estimate the full-scale cable tray heat release rate.
Parameters should be specified ONLY IN THE YELLOW INPUT PARAMETER BOXES.
All subsequent output values are calculated by the spreadsheet and based on values specified in the input parameters. This spreadsheet is protected and secure to avoid errors due to a wrong entry in a cell's).
The chapter in the guide should be read before an analysis is made.

INPUT PARAMETERS

Cable Bench-Scale HER (A_{bs})	1071	kW/m²
Exposed Cable Tray Burning Area (A_t)	43.00	ft²

3.995 m²

HEAT RELEASE RATE DATA FOR CABLE TRAY FIRE

BENCH-SCALE HER OF CABLE TRAY FIRE

Select Cable Type: Id PE

Scroll to desired cable type then Click on selection

Cable Type	Bench-Scale HER per Unit Floor Area Q''_{bs} (kW/m²)
Id PE	1071
PE/PVC	589
XPE/FRXPE	475
PE/PVC	395
PE/PVC	359
XPE/Neoprene	354
PE, PP/Cl.S.PE	345
PE/PVC	312
XPE/Neoprene	302
PE, PP/Cl.S.PE	299
PE, PP/Cl.S.PE	271
FRXPE/Cl.S.PE	258
PE, Nylon/PVC, Nylon	231
PE, Nylon/PVC, Nylon	218
XPE/Cl.S.PE	204
Silicone, glass braid, asbestos	182
XPE/XPE	178
PE, PP/Cl.S.PE	177
Silicone, glass braid	128
Teflon	98

Reference: "Categorization of Cable Flammability, Part 1: Laboratory Evaluation of Cable Flammability Parameters," EPRI Research Project 1165-1, NP-1200, Part 1.

ESTIMATING FULL-SCALE CABLE TRAY HEAT RELEASE RATE

Reference: *SFPE Handbook of Fire Protection Engineering*, 2nd Edition 1995, Page 3-12.

$Q_{fs} = 0.45\ Q_{bs}\ A_f$

Where Q_{fs} = cable tray full-scale HRR (kW)
Q_{bs} = cable tray bench-scale HRR (kW)
A_f = exposed cable tray burning area (m²)

Heat Release Rate Calculation

$Q_{fs} = 0.45\ Q_{bs}\ A_f$

Q_{fs} = 1925.31 kW 1824.85 BTU/sec **ANSWER**

NOTE

The above calculations are based on principles developed in the SFPE Handbook of Fire Protection Engineering, 2nd Edition, 1995.
Calculations are based on certain assumptions and has inherent limitations. The results of such calculations may or may not have reasonable predictive capabilities for a given situation, and should only be interpreted by an informed user.
Although each calculation in the spreadsheet has been verified with the results of hand calculation, there is no absolute guarantee of the accuracy of these calculations.
Any questions, comments, concerns, and suggestions, or to report an error(s) in the spreadsheet, please send an email to nxi@nrc.gov.

NRR

Office of Nuclear Reactor Regulation

Example Problem 7.12-3

Problem Statement

A 3.5 ft diameter flammable liquid (lubricating oil) pool fire arises from a breach in an auxiliary cooling water pump oil tank. The pool fire is located on the floor, 3 m (10 ft) beneath a horizontal cable tray. It is assumed that the pool fire ignites an area of approximately 1 m^2 (10.8 ft^2) of the cable tray. The cables in the tray are IEEE-383 unqualified and made of XPE/FRXPE insulation material. Compute the full scale HRR of XPE/FRXPE cable insulation. The bench-scale HRR of XPE/FRXPE is 475 kW/m^2.

Solution

Purpose:

(1) Calculate the full-scale HRR of the XPE/FRXPE insulation material.

Assumptions:

(1) Lee's correlation is valid for this fire scenario

Spreadsheet (FDT^s) Information:

Use the following FDT^s:

(a) Cable_HRR Calculations.xls

FDT^s Input Parameters:

-Exposure Cable Tray Burning Area (A_t) = 10.8 ft^2

-Select Material: **XPE/FRXPE**

Results*

Cable Insulation	Full Scale HRR ($\dot{Q}_{fs}$) kW (Btu/sec)
XPE/FRXPE	214 (203)

*see spreadsheet on next page

Spreadsheet Calculations

CHAPTER 7 - METHOD OF ESTIMATING FULL-SCALE HEAT RELEASE RATE OF A CABLE TRAY FIRE

The following calculations estimate the full-scale cable tray heat release rate.
Parameters should be specified ONLY IN THE YELLOW INPUT PARAMETER BOXES.
All subsequent output values are calculated by the spreadsheet and based on values specified in the input parameters. This spreadsheet is protected and secure to avoid errors due to a wrong entry in a cell(s).
The chapter in the guide should be read before an analysis is made.

INPUT PARAMETERS

Cable Bench-Scale HRR (Q_{bs})	475 kW/m²	
Exposed Cable Tray Burning Area (A_f)	10.80 ft²	1.003 m²

HEAT RELEASE RATE DATA FOR CABLE TRAY FIRE

BENCH-SCALE HRR OF CABLE TRAY FIRE

Select Cable Type

XPE/FRXPE

Scroll to desired cable type then Click on selection

Cable Type	Bench-Scale HRR per Unit Floor Area Q''_{bs} (kW/m²)
Id PE	1071
PE/PVC	589
XPE/FRXPE	475
PE/PVC	396
PE/PVC	359
XPE/Neoprene	354
PE, PP/Cl.S.PE	345
PE/PVC	312
XPE/Neoprene	302
PE, PP/Cl.S.PE	299
PE, PP/Cl.S.PE	271
FRXPE/Cl.S.PE	258
PE, Nylon/PVC, Nylon	231
PE, Nylon/PVC, Nylon	218
XPE/Cl.S.PE	204
Silicone, glass braid, asbestos	182
XPE/XPE	178
PE, PP/CLS.PE	177
Silicone, glass braid	128
Teflon	98

Reference: "Categorization of Cable Flammability, Part 1: Laboratory Evaluation of Cable Flammability Parameters," EPRI Research Project 1165-1, NP-1200, Part 1.

ESTIMATING FULL-SCALE CABLE TRAY HEAT RELEASE RATE

Reference: *SFPE Handbook of Fire Protection Engineering*, 2nd Edition 1995, Page 3-12.

$Q_{fs} = 0.45\ Q_{bs}\ A_f$

Where Q_{fs} = cable tray full-scale HRR (kW)
Q_{bs} = cable tray bench-scale HRR (kW)
A_f = exposed cable tray burning area (m²)

Heat Release Rate Calculation

$Q_{fs} = 0.45\ Q_{bs}\ A_f$

Q_{fs} = 214.47 kW 203.28 BTU/sec **ANSWER**

NOTE

The above calculations are based on principles developed in the SFPE Handbook of Fire Protection Engineering, 2nd Edition, 1995.
Calculations are based on certain assumptions and has inherent limitations. The results of such calculations may or may not have reasonable predictive capabilities for a given situation, and should only be interpreted by an informed user.
Although each calculation in the spreadsheet has been verified with the results of hand calculation, there is no absolute guarantee of the accuracy of these calculations.
Any questions, comments, concerns, and suggestions, or to report an error(s) in the spreadsheet, please send an email to nxl@nrc.gov.

NRR

Office of Nuclear Reactor Regulation

CHAPTER 8. ESTIMATING BURNING DURATION OF SOLID COMBUSTIBLES

8.1 Objectives

This chapter has the following objectives:

- Introduce factors that influence the fire duration of solid combustibles.
- Explain how to calculate fire durations for various solid combustibles.
- Approximate first order estimates of burning durations.

8.2 Introduction

The burning duration can be thought of as the time between ignition and the decay phase of a fire. The burning duration (fire) for a given compartment size and ventilation condition is driven by the fuel load. Fuel loading, given in terms of kg (fuel)/m^2 or lb (fuel)/ft^2 based on the amount of combustibles per unit floor area has been traditionally used to approximate the fire duration. Higher fuel loads typically mean longer durations assuming a fire burning at a constant HRR consumes fuel mass at a constant rate. Given the mass of material being burned per second and the amount of material available to be consumed, it is possible to calculate a first order estimate for the total burning duration of a fuel. Note that for ventilation-controlled fires, higher fuel loads have no effect on compartment temperature, with the exception that the fire duration increases the gas temperature.

8.3 Burning Duration of Solid Combustibles

Fire duration of solid combustibles is an approximation of the potential destructive impact of the burnout[1] of all of the available fuel in a compartment or enclosure with at least one ventilation opening. The intensity and duration of a fully developed fire depends upon the amount of combustibles available, their burning rates, and the air available to support their combustion. Fire intensity is lower when the walls and ceiling absorb significant amounts of energy, rather than acting primarily as insulation or radiation barriers. The possibility that the fire separation barriers will fail is important to keep in mind long after the fully developed fire begins to decay. However, as in many real fire situations, this threat is usually mitigated by automatic and/or manual fire suppression activities.

The burning duration of solid combustibles is estimated using the following equation:

$$t_{Solid} = \frac{m_{Fuel}\Delta H_c}{\dot{Q}''A_{Fuel}} \qquad (8\text{-}1)$$

Where:

t_{Solid} = burning duration (sec)
m_{Fuel} = mass of solid fuel (kg)

[1]Burnout as used in this discussion, is when all the available combustibles are consumed. It should be remembered that in most fires, the combustion will be incomplete.

ΔH_c = effective heat of combustion (kJ/kg)
$\dot{Q}''$ = heat release rate per unit floor area (kW/m^2)
A_{Fuel} = exposed fuel surface area (m^2)

The exposed fuel surface area can be calculated as follow:

$$A_{Fuel} = W \times L \qquad (8\text{-}2)$$

Where:
A_{Fuel} = fuel surface area (m^2)
W = fuel exposed width (m)
L = fuel exposed length (m).

Table 8-1 lists thermal properties of solid combustible materials.

Table 8-1. Thermal Properties of Solid Combustible Materials (Tewarson, 1995 and Karlsson and Quintiere, 1999)

Materials	HRR per Unit Floor Area $\dot{Q}''$ (kW/m^2)	Heat of Combustion ΔH_c (kJkg)
PE/PVC	589	24,000
XPE/FRXPE	475	28,300
XPE/Neoprene	354	10,300
PE, Nylon/PVC, Nylon	231	9,200
Teflon	98	3,200
Douglas fir plywood	124	13,000–15,000
Fire-retardant treated plywood	81	13,500
Wood pallets, stacked 1.5 ft high	1,420	13,000–15,000
Wood pallets, stacked 5 ft high	3,970	13,000–15,000
Wood pallets, stacked 10 ft high	6,800	13,000–15,000

FRXPE - Fire Retardant Crosslinked Polyethylene; PE - Polyethylene;
PVC - Polyvinylchloride; XPE - Crosslinked Polyethylene;

8.4 Assumptions and Limitations

The method discussed in this chapter is subject to several assumptions and limitations:

(1) Combustion is incomplete (leaving some residual fuel) and takes place entirely within the confines of the compartment.

(2) Virtually all of the potential energy in the fuel is released in the involved compartment.

8.5 Required Input for Spreadsheet Calculations

The user must be obtain following information before using the spreadsheet:

(1) fuel type (material)

(2) mass of solid fuel (lb)

(3) exposed fuel surface area (ft^2)

8.6 Cautions

(1) Use (Burning_Duration_Soild.xls) spreadsheet on the CD-ROM for calculation.

(2) Make sure to enter the input parameters in the correct units.

8.7 Summary

Estimating the burning duration of solid combustibles involves the following steps:

(1) Determine the mass of fuel.

(2) Calculate the surface area of combustible solid.

(3) Calculate the burning duration using HRR per unit floor area and fuel heat of combustion.

8.8 References

Karlsson, B., and J.G. Quintiere, *Enclosure Fire Dynamics*, Chapter 3, "Energy Release Rates," CRC Press LLC, New York, pp. 25–46, 1999.

Tewarson, A., "Generation of Heat and Chemical Compounds in Fires," Section 3, Chapter 4, *SFPE Handbook of Fire Protection Engineering*, 2nd Edition, P.J. DiNenno, Editor-in-Chief, National Fire Protection Association, Quincy, Massachusetts, 1995.

8.9 Problems

Example Problem 8.9-1

Problem Statement

A horizontal cable failed as a result of self-initiated fire and burn in a compartment. Compute the burning duration of a cable tray with an exposed surface area of 1 ft^2 filled with 10 lb of IEEE-383 unqualified PE/PVC cables. The heat release per unit of area of PE/PVC is 589 kW/m^2 and the heat of combustion is 24,000 kJ/kg.

Solution

Purpose:
(1) Calculate the burning duration of the cable material (PE/PVC).

Assumptions:
(1) Combustion is incomplete and takes place entirely within the confines of the compartment
(2) Virtually all of the potential energy in the fuel is released in the involved compartment

Spreadsheet (FDT*) Information:

Use the following FDT*:
(a) Burning_Duration Solid.xls

FDT* Input Parameters:
-Mass of Solid Fuel (m_{solid}) = 10 lb
-Exposure Fuel Surface Area (A_{fuel}) = 1 ft^2
-Select Material: **PVC/PE**

Results*

Material	Burning Duration (t_{solid}) (min.)
PVC/PE	33

*see spreadsheet on next page

Spreadsheet Calculations

CHAPTER 8 - METHOD OF ESTIMATING BURNING DURATION OF SOLID COMBUSTIBLES

The following calculations provides an approximation of the burning duration of solid combustibles based on free burning rate with a given surface area.
Parameters should be specified ONLY IN THE YELLOW INPUT PARAMETER BOXES.
All subsequent output values are calculated by the spreadsheet and based on values specified in the input parameters. This spreadsheet is protected and secure to avoid errors due to a wrong entry in a cell(s).
The chapter in the guide should be read before an analysis is made.

INPUT PARAMETERS

COMPARTMENT INFORMATION

Mass of Solid Fuel (m_{solid})	10.00	lb	4.54 kg
Exposed Fuel Surface Area (A_{fuel})	1.00	ft^2	0.09 m^2
Heat Release Rate per Unit Floor Area (Q")	589	kW/m^2	
Effective Heat of Combustion ($\Delta H_{c,eff}$)	24000	kJ/kg	

THERMAL PROPERTIES OF SOLID COMBUSTIBLE MATERIALS

Select Material: PE/PVC

Scroll to desired material then Click on selection

Materials	HRR per Unit Floor Area Q" (kW/m^2)	Heat of Combustion ΔH_c (kJ/kg)
PE/PVC	589	24000
XPE/FRXPE	475	28300
XPE/Neoprene	354	10300
PE, Nylon/PVC, Nylon	231	9200
Teflon	98	3200
Douglas fir plywood	221	17600
Fire retardant treated plywood	81	13500
Particleboard, 19 mm thick	1900	17500
Nylon 6/6	1313	32000
Polymethlmethacrylate (PMMA)	665	26000
Polypropylene (PP)	1509	43200
Polystyrene (PS)	1101	42000
Polyethylene (PE)	1408	46500
Polycarbonate	420	24400
Polyurethane	710	45000
Polyvinyl Chloride (PVC) Flexible	237	15700
Strene-butadiene Copolymers (SBR)		44000
Ethylene Propylene Dien Rubber (EPDM)	956	28800
Empty Cartons 15 ft high	1700	12700
Wood pallets, stacked 1.5 ft high	1420	14000
Wood pallets, stacked 5 ft high	3970	14000
Wood pallets, stacked 10 ft high	6800	14000

References: "Categorization of Cable Flammability, Part 1: Laboratory Evaluation of Cable Flammability Parameters," EPRI Research Project 1165-1, NP-1200, Part 1.
Karlsson and Quantiere, *Enclosure Fire Dynamics*, Chapter 3,: Energy Release Rate," CRC Press, 1999.
Johnson, D. G., "Combustion Properties of Plastics," Journal of Applied Fire Science, Volume 4, No. 3, 1994-95, pp. 185-201.
Hirschler, M, M., "Heat Release from Plastic Materials," Heat Release in Fires, Babrauskas and Grayson, Editors, Elsevier Applied Science, 1992.

BURNING DURATION OF SOLID COMBUSTIBLES

Reference: *NFPA Fire Protection Handbook*, 18th Edition, 1997.

$t_{solid} = (m_{Fuel}\,\Delta H_c)/(Q''\,A_{Fuel})$

Where m_{Fuel} = mass of solid fuel (kg)
ΔH_c = fuel effective heat of combustion (kJ/kg)
Q" = *heat release rate per unit floor area of fuel* (kW/m^2)
A_{Fuel} = exposed fuel surface area (m^2)

$t_{solid} = (m_{solid}\ \Delta H_c)/(Q''\ A_{solid})$

t_{solid} = 1989.44 sec 33.16 minutes* **ANSWER**

***Note: In fires, combustion is never complete, leaving some residual fuel, therefore this method provides a reasonable burning duration for solid fuel.**

NOTE

The above calculations are based on principles developed in the NFPA Fire Protection Handbook 18th Edition, 1997. Calculations are based on certain assumptions and have inherent limitations. The results of such calculations may or may not have reasonable predictive capabilities for a given situation, and should only be interpreted by an informed user.

Although each calculation in the spreadsheet has been verified with the results of hand calculation, there is no absolute guarantee of the accuracy of these calculations.

Any questions, comments, concerns, and suggestions, or to report an error(s) in the spreadsheet, please send an email to nxi@nrc.gov.

NRR

Office of Nuclear Reactor Regulation

This page intentionally left blank.

Example Problem 8.9-2

Problem Statement

A horizontal cable tray filled with IEEE-383 unqualified XPE/FRXPE cables failed as a result of self-initiated fire and burn in a compartment 20 ft wide x 20 ft deep x 10 ft high. The cable tray has a nominal width of 2 ft and a linear length of 24 ft (i.e., exposed surface area of 48 ft^2). Compute the burning duration of XPE/FRXPE cables assuming the mass of cables is 50 lb. The heat release per unit area of XPE/FRXPE is 475 kW/m^2 and heat of combustion is 28,300 kJ/kg.

Solution

Purpose:
(1) Calculate the burning duration of the cable material (XPE/FRXPE).

Assumptions:
(1) Combustion is incomplete and takes place entirely within the confines of the compartment
(2) Virtually all of the heat energy in the fuel is released in the involved compartment

Spreadsheet (FDT^s) Information:

Use the following FDT^s:
(a) Burning_Duration Solid.xls

FDT^s Input Parameters:
-Mass of Solid Fuel (m_{solid}) = 50 lb
-Exposure Fuel Surface Area (A_{fuel}) = 48 ft^2
-Select Material: **XPE/FRXPE**

Results*

Material	Burning Duration (t_{solid}) (min.)
XPE/FRXPE	5

*see spreadsheet on next page

Spreadsheet Calculations

CHAPTER 8 - METHOD OF ESTIMATING BURNING DURATION OF SOLID COMBUSTIBLES

The following calculations provides an approximation of the burning duration of solid combustibles based on free burning rate with a given surface area.
Parameters should be specified ONLY IN THE YELLOW INPUT PARAMETER BOXES.
All subsequent output values are calculated by the spreadsheet and based on values specified in the input parameters. This spreadsheet is protected and secure to avoid errors due to a wrong entry in a cell(s).
The chapter in the guide should be read before an analysis is made.

INPUT PARAMETERS

COMPARTMENT INFORMATION

Mass of Solid Fuel (m_{solid})	50.00	lb	22.68 kg
Exposed Fuel Surface Area (A_{fuel})	48.00	ft^2	4.46 m^2
Heat Release Rate per Unit Floor Area (Q")	475	kW/m^2	
Effective Heat of Combustion ($\Delta H_{c,eff}$)	28300	kJ/kg	

THERMAL PROPERTIES OF SOLID COMBUSTIBLE MATERIALS

Materials	HRR per Unit Floor Area Q" (kW/m^2)	Heat of Combustion ΔH_c (kJ/kg)
PE/PVC	589	24000
XPE/FRXPE	475	28300
XPE/Neoprene	354	10300
PE, Nylon/PVC, Nylon	231	9200
Teflon	98	3200
Douglas fir plywood	221	17600
Fire retardant treated plywood	81	13500
Particleboard, 19 mm thick	1900	17500
Nylon 6/6	1313	32000
Polymethlmethacrylate (PMMA)	665	26000
Polypropylene (PP)	1509	43200
Polystyrene (PS)	1101	42000
Polyethylene (PE)	1408	46500
Polycarbonate	420	24400
Polyurethane	710	45000
Polyvinyl Chloride (PVC) Flexible	237	15700
Strene-butadiene Copolymers (SBR)		44000
Ethylene Propylene Dien Rubber (EPDM)	958	28800
Empty Cartons 15 ft high	1700	12700
Wood pallets, stacked 1.5 ft high	1420	14000
Wood pallets, stacked 5 ft high	3970	14000
Wood pallets, stacked 10 ft high	6800	14000

Select Material

XPE/FRXPE

Scroll to desired material then click on selection

References: "Categorization of Cable Flammability, Part 1: Laboratory Evaluation of Cable Flammability Parameters," EPRI Research Project 1165-1, NP-1200, Part 1.
Karlsson and Quantiere, *Enclosure Fire Dynamics*, Chapter 3,: Energy Release Rate," CRC Press, 1999.
Johnson, D. G., "Combustion Properties of Plastics," Journal of Applied Fire Science, Volume 4, No. 3, 1994-95, pp. 185-201.
Hirschler, M, M., "Heat Release from Plastic Materials," Heat Release in Fires, Babrauskas and Grayson, Editors, Elsevier Applied Science, 1992.

BURNING DURATION OF SOLID COMBUSTIBLES

Reference: *NFPA Fire Protection Handbook*, 18th Edition, 1997.

$t_{solid} = (m_{Fuel}\,\Delta H_c)/(Q''\,A_{Fuel})$

Where m_{Fuel} = mass of solid fuel (kg)
ΔH_c = fuel effective heat of combustion (kJ/kg)
Q" = heat release rate per unit floor area of fuel (kW/m^2)
A_{Fuel} = exposed fuel surface area (m^2)

$t_{solid} = (m_{solid}\ \Delta H_c)/(Q''\ A_{solid})$

t_{solid} =	303.01 sec	5.05 minutes*	ANSWER

***Note: In fires, combustion is never complete, leaving some residual fuel, therefore this method provides a reasonable burning duration for solid fuel.**

NOTE

The above calculations are based on principles developed in the NFPA Fire Protection Handbook 18th Edition, 1997. Calculations are based on certain assumptions and have inherent limitations. The results of such calculations may or may not have reasonable predictive capabilities for a given situation, and should only be interpreted by an informed user.

Although each calculation in the spreadsheet has been verified with the results of hand calculation, there is no absolute guarantee of the accuracy of these calculations.

Any questions, comments, concerns, and suggestions, or to report an error(s) in the spreadsheet, please send an email to nxl@nrc.gov.

NRR

Office of Nuclear Reactor Regulation

This page intentionally left blank.

Example Problem 8.9-3

Problem Statement

A fire involving 1.5 ft high stack of wood pallets is located in a compartment 40 ft wide x 40 ft deep x 10 ft high. The mass of the wood pallets is 30 lb. Compute the burning duration of the wood pallets fire in the compartment. Te exposed surface area of the wood pallets is 4 ft x 4 ft or 16 ft^2.

Solution

Purpose:

(1) Calculate the burning duration of the stack of wood pallets.

Assumptions:

(1) Combustion is incomplete and takes place entirely within the confines of the compartment

(2) Virtually all of the heat energy in the fuel is released in the involved compartment

Spreadsheet (FDT^s) Information:

Use the following FDT^s:

(a) Burning_Duration Solid.xls

FDT^s Input Parameters:

-Mass of Solid Fuel (m_{solid}) = 30 lb

-Exposure Fuel Surface Area (A_{fuel}) = 16 ft^2

-Select Material: **Wood pallet, stacked 1.5 ft high**

Results*

Material	Burning Duration (t_{solid}) (min.)
Wood pallet, stacked 1.5 ft high	1.5

*see spreadsheet on next page

Spreadsheet Calculations

CHAPTER 8 - METHOD OF ESTIMATING BURNING DURATION OF SOLID COMBUSTIBLES

The following calculations provides an approximation of the burning duration of solid combustibles based on free burning rate with a given surface area.
Parameters should be specified ONLY IN THE YELLOW INPUT PARAMETER BOXES.
All subsequent output values are calculated by the spreadsheet and based on values specified in the input parameters. This spreadsheet is protected and secure to avoid errors due to a wrong entry in a cell(s).
The chapter in the guide should be read before an analysis is made.

INPUT PARAMETERS

COMPARTMENT INFORMATION

Mass of Solid Fuel (m_{solid})	30.00	lb	13.61 kg
Exposed Fuel Surface Area (A_{fuel})	16.00	ft^2	1.49 m^2
Heat Release Rate per Unit Floor Area (Q")	1420	kW/m^2	
Effective Heat of Combustion ($\Delta H_{c,eff}$)	14000	kJ/kg	

THERMAL PROPERTIES OF SOLID COMBUSTIBLE MATERIALS

Select Material: Wood pallets, stacked 1.5 ft high

Scroll to desired material then click on selection

Materials	HRR per Unit Floor Area Q" (kW/m^2)	Heat of Combustion ΔH_c (kJ/kg)
PE/PVC	589	24000
XPE/FRXPE	475	28300
XPE/Neoprene	354	10300
PE, Nylon/PVC, Nylon	231	9200
Teflon	98	3200
Douglas fir plywood	221	17600
Fire retardant treated plywood	81	13500
Particleboard, 19 mm thick	1900	17500
Nylon 6/6	1313	32000
Polymethimethacrylate (PMMA)	665	26000
Polypropylene (PP)	1509	43200
Polystyrene (PS)	1101	42000
Polyethylene (PE)	1408	46500
Polycarbonate	420	24400
Polyurethane	710	45000
Polyvinyl Chloride (PVC) Flexible	237	15700
Strene-butadiene Copolymers (SBR)		44000
Ethylene Propylene Dien Rubber (EPDM)	956	28800
Empty Cartons 15 ft high	1700	12700
Wood pallets, stacked 1.5 ft high	1420	14000
Wood pallets, stacked 5 ft high	3970	14000
Wood pallets, stacked 10 ft high	6800	14000

References: "Categorization of Cable Flammability, Part 1: Laboratory Evaluation of Cable Flammability Parameters," EPRI Research Project 1165-1, NP-1200, Part 1.
Karlsson and Quantiere, *Enclosure Fire Dynamics*, Chapter 3,: Energy Release Rate," CRC Press, 1999.
Johnson, D. G., "Combustion Properties of Plastics," Journal of Applied Fire Science, Volume 4, No. 3, 1994-95, pp. 185-201.
Hirschler, M. M., "Heat Release from Plastic Materials," Heat Release in Fires, Babrauskas and Grayson, Editors, Elsevier Applied Science, 1992.

BURNING DURATION OF SOLID COMBUSTIBLES

Reference: *NFPA Fire Protection Handbook*, 18th Edition, 1997.

$t_{solid} = (m_{Fuel}\,\Delta H_c)/(Q''\,A_{Fuel})$

Where m_{Fuel} = mass of solid fuel (kg)
ΔH_c = fuel effective heat of combustion (kJ/kg)
Q'' = heat release rate per unit floor area of fuel (kW/m^2)
A_{Fuel} = exposed fuel surface area (m^2)

$t_{solid} = (m_{solid}\ \Delta H_c)/(Q''\ A_{solid})$

t_{solid} =	90.26 sec	1.50 minutes*	ANSWER

***Note: In fires, combustion is never complete, leaving some residual fuel, therefore this method provides a reasonable burning duration for solid fuel.**

NOTE

The above calculations are based on principles developed in the NFPA Fire Protection Handbook 18th Edition, 1997. Calculations are based on certain assumptions and have inherent limitations. The results of such calculations may or may not have reasonable predictive capabilities for a given situation, and should only be interpreted by an informed user.

Although each calculation in the spreadsheet has been verified with the results of hand calculation, there is no absolute guarantee of the accuracy of these calculations.

Any questions, comments, concerns, and suggestions, or to report an error(s) in the spreadsheet, please send an email to nxi@nrc.gov.

NRR

Office of Nuclear Reactor Regulation

This page intentionally left blank.

CHAPTER 9. ESTIMATING THE CENTERLINE TEMPERATURE OF A BUOYANT FIRE PLUME

9.1 Objectives

This chapter has the following objectives:

- Discuss various types of fire plumes.
- Discuss the fire plume that is most common encountered.
- Identify the temperature and flow characteristics of the fire plume.
- Define relevant terms including fire plume, air entrainment, plume temperature, ceiling jet, and virtual origin.

9.2 Introduction

A fire plume is a buoyantly rising column of hot combustion products, along with unburned fuel vapor and admixed air. When fire in a building continues to grow, the plume typically impinges on the ceiling, unless the fire remains very small or the ceiling is very high. The interaction of a plume with a ceiling is discussed in subsequent sections.

Figure 9-1 shows a turbulent column of hot gases rising because of buoyancy differences. The effect of the turbulence will cause rapid mixing of the hot gases with the cooler surrounding air. The addition of cold mass to the rising column decreases its velocity, widens the column, and reduces its temperature. When plume height is large in comparison to the width of the base of the plume, the average midline temperature (relative to ambient temperature) is found to decrease at a rate that is inversely proportional to the height of the plume raised to the 5/3 power. Similarly, the average velocity of the midline is inversely proportional to the height of the plume raised to the ⅓ power. Correlations have been developed to predict the temperature and velocity distribution across a plume at any given height. These correlations are related in terms of the HRR driving the plume.

The foregoing discussion refers to a rising column of hot gases, with no combustion taking place. This is applicable to a fire in which the combustion occurs close to the base of the fire plume. However, if combustion continues within the fire plume, the release of heat increases the plume temperature and velocity. The turbulence intensity in a fire plume is high; the velocity fluctuations at the centerline can be up to 30 percent of the average velocity, and the temperature fluctuations can be even greater.

In general, a fire plume contains smoke particles. As surrounding air mixes into the plume, it dilutes the smoke and reduces the temperature. This mixing is called entrainment. In order to predict which environment a giving fire will produced, it is necessary to know the rate of entrainment into the plume. Researchers have proposed various correlations to calculate the rate of entrainment in a fire plume, however, the results are not entirely reliable. Small ambient distribution in the air near the plume can also have substantial effects on the entrainment rate. When combustion occurs only in the lower portion of a plume, there is roughly an order of magnitude more entrained air present than the stoichiometric requirement at the plume height above when there is no combustion occurring.

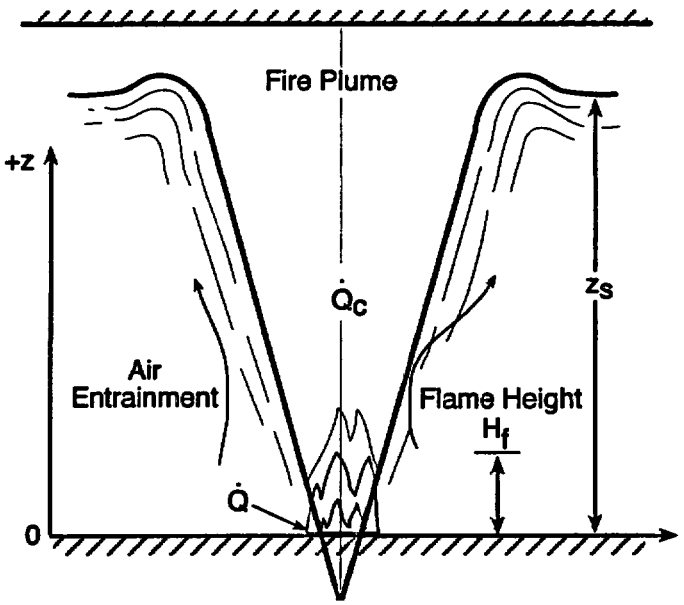

Figure 9-1 A Buoyant Turbulent Plume Showing Air Entrainment

A fire plume can be subdivided into flaming (reacting) and non-flaming (non-reacting) zones. The flaming zone lies just above the fire source and the fuel vapors released by the combustibles burn in this zone. The air required by the reaction is supplied by the entrainment attributable to the upward movement of the reactants. Above the flaming zone where no reaction is taking place in the column of hot products of combustion is defined as the non-flaming zone.

9.3 Fire Plume Characteristics

Fire plumes can be characterized into various groups, depending on the scenario under investigation. This chapter focuses on the point source thermal plume, which is the plume most commonly encountered in fire dynamics applications. The point source thermal plume (or axisymmetric buoyant plume), as described by and George, Alpert, and Tamanini (1977) and Alpert and Ward (1984), results when a diffusion flame is formed above the burning fuel. An axis of symmetry is assumed to exist along the vertical centerline of the plume. Another fire plume category, known as the line plume, is caused by a diffusion flame formed above a long and narrow burner that allows air to be entrained from two sides as the hot gases rise. Examples of line fires including flame spread over flammable wall linings, a balcony spill plume, a long sofa, a row of townhouses, and the advancing front of forest fire.

The unconfined axisymmetric plume has no physical barriers to limit vertical movement or restrict air entrainment across the plume boundary. In a confined space the fire plume can be influenced by surrounding surfaces. For example, the area through which air may be entrained is reduced if an item is burning against a wall. Similarly, if the fire plume impinges on a ceiling, it will be deflected horizontally to form a ceiling jet. Impingement on a ceiling also reduces the amount of air entrained by the plume. The most important consequence of plumes interacting with their surroundings is heat transfer to the surfaces involved and the speed at which these surfaces (if combustible) will ignite and contribute to the fire growth process.

The axisymmetric fire plume is conventionally divided into three zones, as shown in Figure 9-2. In the continuous flame zone, the upward velocity is near zero at the base and increases with height. In the intermittent flame zone the velocity is relatively constant, while in the far field zone the velocity decreases with height.

The quantity of air entrained, along with a resultant decrease in plume temperature and increase in the total mass transported in the plume, are governed by the plume velocity and entrainment coefficient. The entrained flow is proportional to the plume velocity at a particular elevation. This proportional constant is the entrainment coefficient. Hence, the amount of air entrained is related to the plume velocity multiplied by the entrainment coefficient.

Temperature, velocity, and mass flow rates of the fire plume above the flame are critical to the many technical aspects of fire growth in a compartment for example,

- the rate of formation and descent of the smoke layer
- the temperature and concentration of the hot smoke layer
- the required size of the smoke and heat venting systems
- the actuation time of sprinklers and detectors

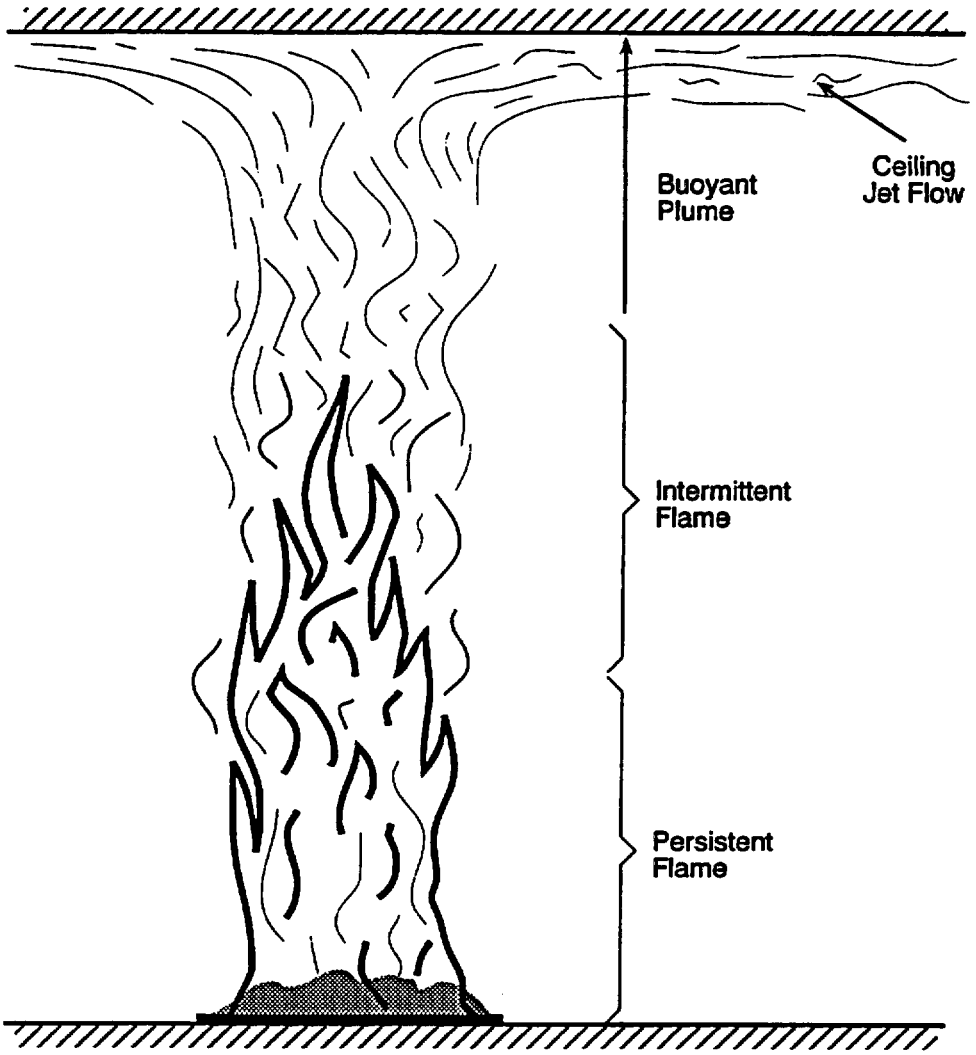

Figure 9-2 Three Zones of the Axisymmetric Buoyant Fire Plume

9.3.1 Plume Temperature

The peak temperature is found in the plume centerline, and decreases toward the edge of the plume where more ambient air is entrained to cool the plume. The centerline temperature, denoted $T_{p(centerline)}$, varies with height. In the continuous flame region, for example, the centerline temperature is roughly constant and represents the mean flame temperature. By contrast, the temperature decreases sharply above the flames as an increasing amount of ambient air is entrained into the plume. The symbol $\Delta T_{p(centerline)}$ describes the increase in centerline plume temperature above the ambient temperature, T_a, as shown in the following equation:

$$\Delta T_{p(centerline)} = T_{p(centerline)} - T_a \qquad (9\text{-}1)$$

Numerpus correlations are available to estimate the plume centerline temperature. These correlations relate the temperature as a function HRR and of height above the source. For example, consider a region of a ceiling jet at radial distance from the fire axis equal to the vertical distance from the fire source to the ceiling. In this region, the maximum velocity in the jet drops to half the value near the fire axis, and the temperature (relative to ambient) drops to about 40-percent of the value near the fire axis. The maxims of velocity and temperature exist at a distance below the ceiling equal to about 1-percent of the distance from the fire source to the ceiling. If the walls are much farther away than this, the temperature and velocity of the ceiling jet decay to negligibly low values before the jet encounters the nearest wall. However, if the nearest wall is not far away, a reflection occurs when the jet reaches the wall, and the reflected jet moves back toward the fire axis just under the original jet. Thus, the hot layer under the ceiling becomes thicker.

If the compartment has an opening and fire continues, the hot layer ultimately becomes thick enough to extend below the top of the opening, after which the hot, smoke-laden gases begin to exit from the compartment.

Heskestad (1995) provided a simple correlation for estimating the maximum centerline temperature of a fire plume as a function of ceiling height and HRR:

$$T_{p(centerline)} - T_a = \frac{9.1\left(\frac{T_0}{g c_p^2 \rho_a^2}\right)^{\frac{1}{3}} \dot{Q}_c^{\frac{2}{3}}}{(z - z_0)^{\frac{5}{3}}} \qquad (9\text{-}2)$$

Where:

$T_{p(centerline)}$ = plume centerline temperature (K)
T_a = ambient air temperature (K)
$\dot{Q}_c$ = convective HRR (kW)
g = acceleration of gravity (m/sec^2)
c_p = specific heat of air (kJ/Kg-K)
ρ_a = ambient air density (kg/m^3)
z = elevation above the fire source (m)

z_0 = hypothetical virtual origin of the fire (m)

The virtual origin is the equivalent point source height of a finite area fire (Figure 9-3). The location of the virtual origin is needed to calculate the thermal plume temperature for fires that originate in an area heat source. The thermal plume calculations are based on the assumption that the plume originates in a point heat source. Area heat sources include pool fires and burning three-dimensional objects such as cabinets and cable trays. The use of a point heat source model for area sources is accomplished by calculating the thermal plume parameters at the virtual point source elevation, rather than the actual area source elevation.

The virtual origin, z_0, depends on the diameter of the fire source and the total energy released, as follows:

$$\frac{z_0}{D} = -1.02 + 0.083\frac{\dot{Q}^{\frac{2}{5}}}{D} \qquad (9\text{-}3)$$

Where:

z_0 = virtual origin (m)
D = diameter of fire source (m)
$\dot{Q}$ = total HRR (kW)

For non-circular pools, the effective diameter is defined as the diameter of a circular pool with an area equal to the actual area given by the following equation:

$$D = \sqrt{\frac{4A_f}{\pi}} \qquad (9\text{-}4)$$

Where:

D = diameter of the fire (m)
A_f = fuel spill area or dike area (m^2)

Total HRR $\dot{Q}$ is used when calculating the mean flame height and position of the virtual origin. However, the convective HRR $\dot{Q}_c$ is used when estimating other plume properties, since this is the part of the energy release rate that causes buoyancy. The energy losses attributable to radiation from the flame are typically on the order of 20 to 40-percent of the total HRR $\dot{Q}$. The higher of these values is valid for the sootier and more luminous flames, often from fuels that burn with a low combustion efficiency. The convective HRR is, therefore, often in the range 0.6 $\dot{Q}$ to 0.8 $\dot{Q}$ where $\dot{Q}$ is the total HRR.

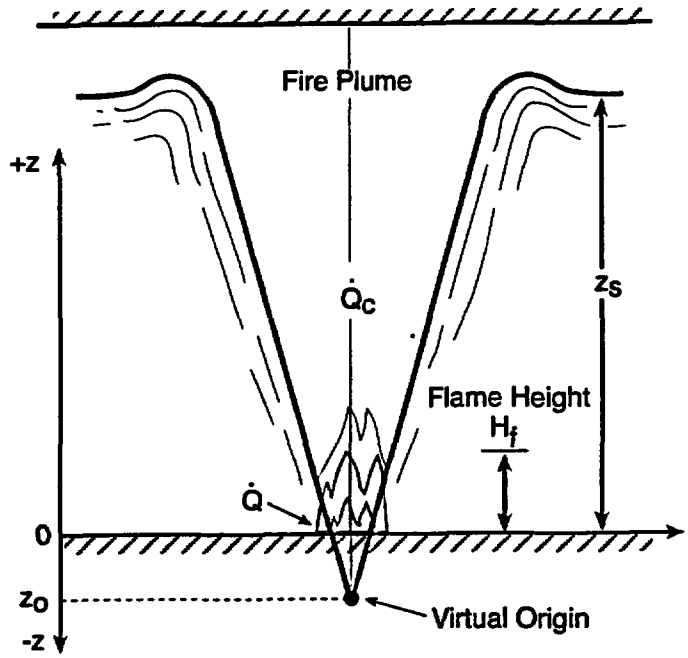

Figure 9-3 Fire Plume with Virtual Origin

9.4 Application for Centerline Fire Plume Correlation

The centerline temperature correlation can be used to predict the temperature increase of the structural elements and subsequent failure of the compartment structure. Also, thermal plume temperature may be used to estimate the temperature of a target located above the plume.

As previously discussed, it is common for a fire plume impinging on a ceiling to make a 90-degree turn and spread out readily under the ceiling, thereby forming a ceiling jet. This ceiling jet is important for two reasons:

(1) Devices to detect the fire, as well as automatic sprinklers, are generally mounted right under the ceiling. Knowledge of the time of arrival and properties of the ceiling jet are crucial to predict when a device will actuate. The actuation of devices, (e.g., sprinklers smoke and thermal detectors) are discussed in Chapters 10, 11 and 12.

(2) The downward thermal radiation from the ceiling jet (including a small fraction from the hot ceiling itself) is a major factor in preheating and igniting combustible items that are not yet involved in the fire. This radiation is very important in determining the rate of fire spread.

9.5 Assumptions and Limitations

The methods discussed in this chapter are subject to several assumptions and limitations.

(1) All heat energy is released at a point.

(2) If the surrounding air is at an elevated temperature, the temperature difference between the plume and the surrounding environment is small. In this situation, the thermal plume cools less effectively, so Equation 9-2 will underestimate the temperature.

(3) The correlation was developed for two-dimensional area sources.

(4) The thermal plume equation is not valid when the momentum forces in a plume are more significant than the buoyant forces, as in a jet fire. If this type of situation is encountered, specialized calculation approaches should be used.

9.6 Required Input for Spreadsheet Calculations

The user must obtain the following information before using the spreadsheet.

(1) heat release rate of the fire (kW)

(2) distance from the top of the fuel to the ceiling (ft)

(3) surface area of the combustible fuel (ft^2)

9.7 Cautions

(1) Use (Plume_Temperature_Calculations.xls) spreadsheet in the CD-ROM for calculation.

(2) Make sure to use correct units when entering the input parameters.

9.8 Summary

This chapter discusses fire plume and ceiling jet flow concepts and related fire hazard calculations. The region of hot gas that flows above the flame is called a plume. The plume changes in temperature, velocity, and diameter primarily because surrounding air is entrained (or mixed) into the upward plume flow. This entrained air reduces the plume temperature and increases the width of the plume. The total flow of the gases increases rapidly high above the flame. The plume temperature and combustion product concentrations are highest just above the flame. Moving upward, the temperature decreases because the cooler entrained air from the surrounding environment is mixed with the hot plume gas flow. The concentration of combustion products is also reduced.

Estimating the centerline temperature of a fire plume involves the following steps:

(1) Calculate the diameter of the fire.

(2) Calculate the virtual origin of the fire

(3) Calculate the convective HRR.

(4) Calculate the plume centerline temperature $T_{p(centerline)}$.

9.9 References

Alpert, R.L., and E.J. Ward, "Evaluation of Unsprinklered Fire Hazard," *Fire Safety Journal*, Volume 7, No. 177, 1984.

Heskestad, G., "Fire Plumes," Section 2, Chapter 2, *SFPE Handbook of Fire Protection Engineering*, 2nd Edition, P.J. DiNenno, Editor-in-Chief, National Fire Protection Association, Quincy, Massachusetts, 1995.

George, W.K., R.L. Alpert and F. Tamanini, "Turbulence Measurements in an Axisymmetric Buoyant Plume, *Interantional Journal of Heat Mass Transfer*, Volume 20, pp.1145–1154, 1977.

9.10 Additional Readings

Drysdale, D.D., *An Introduction to Fire Dynamics*, Chapter 4, "Diffusion Flames and Fire Plumes", 2nd Edition, John Wiley and Sons, New York, 1998.

Fire Dynamics, Course Guide, Federal Emergency Management Agency (FEMA), United States Fire Administration (USFA), National Emergency Training Center, Emmitsburg, Maryland, 1995.

Friedman, R., *Principle of Fire Protection Chemistry and Physics*, 3rd Edition National Fire Protection Association, Quincy, Massachusetts, 1998.

Karlsson, B., and J.G. Quintiere, *Enclosure Fire Dynamics*, Chapter 4, "Fire Plumes and Flame Heights," CRC Press LLC, New York, pp. 181–225, 1999.

Quintiere, J.G., *Principles of Fire Behavior*, Delmar Publishers, Albany, New York, 1997.

9.11 Problems

Example Problem 9.11-1

Problem Statement
A steel beam is located 25 ft above the floor. Calculate the temperature of the beam exposed from a 34.5 ft^2 lube oil pool fire? Assume the HRR of the fire is 5,000 kW.

Solution

Purpose:
(1) Determine the plume centerline temperature for the pool fire scenario.

Assumptions:
(1) All heat is released at a point
(2) Buoyant forces are more significant than momentum forces

Spreadsheet (FDT^s) Information:

Use the following FDT^s:
(a) Plume_Temperature_Calculations.xls

FDT^s Input Parameters:
-Heat Release Rate $(\dot{Q})$ = 5,000 kW
-Distance from the Top of the Fuel to the Ceiling (z) = 25 ft
-Area of Combustible Fuel (A_c) = 34.5 ft^2

Results*

Heat Release Rate $\dot{Q}$ (kW)	Plume Centerline Temperature ($T_{p(centerline)}$) °C (°F)
5,000	198 (389)

*see spreadsheet on next page

Spreadsheet Calculations

CHAPTER 9 - METHOD OF ESTIMATING CENTERLINE TEMPERATURE OF A BUOYANT FIRE PLUME

The following calculations estimate the centerline plume temperature in a compartment fire.
Parameters should be specified ONLY IN THE YELLOW INPUT PARAMETER BOXES.
All subsequent output values are calculated by the spreadsheet and based on values specified in the input parameters. This spreadsheet is protected and secure to avoid errors due to a wrong entry in a cell(s).
The chapter in the guide should be read before an analysis is made.

INPUT PARAMETERS

Heat Release Rate of the Fire (Q)	5000.00	kW	
Distance from the Top of the Fuel to the Ceiling (z)	25.00	ft	7.62 m
Area of Combustible Fuel (A_c)	34.50	ft^2	3.21 m^2
AMBIENT CONDITIONS			
Ambient Air Temperature (T_a)	77.00	°F	25.00 °C
			298.00 K
Specific Heat of Air (c_p)	1.00	kJ/kg-K	
Ambient Air Density (ρ_a)	1.20	kg/m^3	
Acceleration of Gravity (g)	9.81	m/sec^2	
Convective Heat Release Fraction (χ_c)	0.50		

ESTIMATING PLUME CENTERLINE TEMPERATURE

Reference: SFPE Handbook of Fire Protection Engineering, 2nd Edition, 1995, Page 2-9

$$T_{p(centerline)} - T_a = 9.1\,(T_a/g\,c_p^2\,\rho_a^2)^{1/3}\,Q_c^{2/3}\,(z - z_0)^{-5/3}$$

Where
- Q_c = convective portion of the heat release rate (kW)
- T_a = ambient air temperature (K)
- g = acceleration of gravity (m/sec^2)
- c_p = specific heat of air (kJ/kg-K)
- ρ_a = ambient air density (kg/m^3)
- z = distance from the top of the fuel package to the ceiling (m)
- z_0 = hypothetical virtual origin of the fire (m)

Convective Heat Release Rate Calculation

$$Q_c = \chi_c\,Q$$

Where
- Q = heat release rate of the fire (kW)
- χ_c = convective heat release fraction
- Q_c = 2500 kW

Pool Fire Diameter Calculation

$A_c = \pi D^2/4$

$D = \sqrt{(4\,A_c/\pi)}$

D = 2.02 m

Hypothetical Virtual Origin Calculation

$z_0/D = -1.02 + 0.083\,(Q^{2/5})/D$

Where
- z_0 = virtual origin of the fire (m)
- Q = heat release rate of fire (kW)
- D = diameter of pool fire (m)

z_0/D = 0.22

z_0 = 0.44 m

Centerline Plume Temperature Calculation

$T_{p(centerline)} - T_a = 9.1\ (T_a/g\ c_p^2\ \rho_a^2)^{1/3}\ Q_c^{2/3}\ (z - z_0)^{-5/3}$

$T_{p(centerline)} - T_a =$	**173.47**
$T_{p(centerline)} =$	**471.47 K**

$T_{p(centerline)} =$ **198.47 °C** **389.25 °F** **ANSWER**

NOTE

The above calculations are based on principles developed in the SFPE Handbook of Fire Protection Engineering, 2nd Edition, 1995.

Calculations are based on certain assumptions and have inherent limitations. The results of such calculations may or may not have reasonable predictive capabilities for a given situation, and should only be interpreted by an informed user.

Although each calculation in the spreadsheet has been verified with the results of hand calculation, there is no absolute guarantee of the accuracy of these calculations.

Any questions, comments, concerns, and suggestions, or to report an error(s) in the spreadsheet, please send an email to nxi@nrc.gov.

NRR

Office of Nuclear Reactor Regulation

This page intentionally left blank.

Example Problem 9.11-2

Problem Statement
Estimate the maximum plume temperature at the ceiling of a 8 ft high room above a 1,000 kW trash fire with an area of 10 ft^2. Assume that the ambient air temperature is 77 °F.

Solution

Purpose:
(1) Determine the maximum plume centerline temperature for the transient combustible fire scenario.

Assumptions:
(1) All heat is released at a point
(2) Buoyant forces are more significant than momentum forces

Spreadsheet (FDT^s) Information:

Use the following FDT^s:
(a) Plume_Temperature_Calculations.xls

FDT^s Input Parameters:
-Heat Release Rate $(\dot{Q})$ = 1000 kW
-Distance from the Top of the Fuel to the Ceiling (z) = 8 ft
-Area of Combustible Fuel (A_c) = 10 ft^2

Results*

Heat Release Rate $\dot{Q}$ (kW)	Plume Centerline Temperature ($T_{p(centerline)}$) °C (°F)
1,000	440.5 (825)

*see spreadsheet on next page

Spreadsheet Calculations

CHAPTER 9 - METHOD OF ESTIMATING CENTERLINE TEMPERATURE OF A BUOYANT FIRE PLUME

The following calculations estimate the centerline plume temperature in a compartment fire.
Parameters should be specified ONLY IN THE YELLOW INPUT PARAMETER BOXES.
All subsequent output values are calculated by the spreadsheet and based on values specified in the input parameters. This spreadsheet is protected and secure to avoid errors due to a wrong entry in a cell(s).
The chapter in the guide should be read before an analysis is made.

INPUT PARAMETERS

Heat Release Rate of the Fire (Q)	1000.00	kW	
Distance from the Top of the Fuel to the Ceiling (z)	8.00	ft	2.44 m
Area of Combustible Fuel (A_c)	10.00	ft^2	0.93 m^2
AMBIENT CONDITIONS			
Ambient Air Temperature (T_a)	77.00	°F	25.00 °C
			298.00 K
Specific Heat of Air (c_p)	1.00	kJ/kg-K	
Ambient Air Density (ρ_a)	1.20	kg/m^3	
Acceleration of Gravity (g)	9.81	m/sec^2	
Convective Heat Release Fraction (χ_c)	0.50		

ESTIMATING PLUME CENTERLINE TEMPERATURE

Reference: SFPE Handbook of Fire Protection Engineering, 2nd Edition, 1995, Page 2-9.

$$T_{p(centerline)} - T_a = 9.1\,(T_a/g\,c_p^2\,\rho_a^2)^{1/3}\,Q_c^{2/3}\,(z - z_0)^{-5/3}$$

Where
Q_c = convective portion of the heat release rate (kW)
T_a = ambient air temperature (K)
g = acceleration of gravity (m/sec^2)
c_p = specific heat of air (kJ/kg-K)
ρ_a = ambient air density (kg/m^3)
z = distance from the top of the fuel package to the ceiling (m)
z_0 = hypothetical virtual origin of the fire (m)

Convective Heat Release Rate Calculation

$$Q_c = \chi_c\,Q$$

Where
Q = heat release rate of the fire (kW)
χ_c = convective heat release fraction
Q_c = 500 kW

Pool Fire Diameter Calculation

$A_c = \pi D^2/4$
$D = \sqrt{(4\,A_c/\pi)}$
D = 1.09 m

Hypothetical Virtual Origin Calculation

$$z_0/D = -1.02 + 0.083\,(Q^{2/5})/D$$

Where
z_0 = virtual origin of the fire (m)
Q = heat release rate of fire (kW)
D = diameter of pool fire (m)

z_0/D = 0.19
z_0 = 0.21 m

Centerline Plume Temperature Calculation

$T_{p(centerline)} - T_a = 9.1\ (T_a/g\ c_p^2\ \rho_a^2)^{1/3}\ Q_c^{2/3}\ (z - z_0)^{-5/3}$

$T_{p(centerline)} - T_a =$	415.43
$T_{p(centerline)} =$	713.43 K

$T_{p(centerline)} =$ 440.43 °C 824.77 °F **ANSWER**

NOTE

The above calculations are based on principles developed in the SFPE Handbook of Fire Protection Engineering, 2nd Edition, 1995.

Calculations are based on certain assumptions and have inherent limitations. The results of such calculations may or may not have reasonable predictive capabilities for a given situation, and should only be interpreted by an informed user.

Although each calculation in the spreadsheet has been verified with the results of hand calculation, there is no absolute guarantee of the accuracy of these calculations.

Any questions, comments, concerns, and suggestions, or to report an error(s) in the spreadsheet, please send an email to nxl@nrc.gov.

NRR

Office of Nuclear Reactor Regulation

This page intentionally left blank.

CHAPTER 10. ESTIMATING SPRINKLER RESPONSE TIME

10.1 Objectives

This chapter has the following objectives:

- Explain the advantages and disadvantages of sprinklers.
- Identify the four basic types of sprinkler systems.
- Describe the purpose of sprinklers.
- Explain how sprinklers function.

10.2 Introduction

Sprinklers are manufactured in a variety of temperature ratings and orifice sizes. In selecting sprinkler systems, one must carefully consider the potential fire hazard, ceiling configuration, corrosiveness of the environment, susceptibility to damage, etc. Every situation must be thoroughly analyzed to choose the best type of sprinkler system for a given hazard.

Sprinklers produce a cooling effect on the fire when the water from a sprinkler vaporizes to cool the burning materials below their ignition temperature. Sprinklers are designed to control a fire. However, many times the sprinkler system extinguishes the fire because the surrounding materials can no longer heat to their ignition temperature. If the first sprinkler cannot control the fire, a second sprinkler is activated which provides additional cooling. This process continues until the fire is controlled.

Sprinklers are reliable thermosensitive devices, they rarely fail, are cost effective, and typically use less water than fire hoses. This helps reduce the amount of equipment damage by applying water directly over the fire. Human response time (i.e., discovery of the fire, travel time by the fire brigade) usually takes much longer than the time required for automatic sprinklers to control a fire while it is still in the early stages. This also reduces the amount of time available for smoke to be produced and damage equipment.

There are four basic types of automatic sprinkler systems. Within these four basic categories, sprinkler systems can be further classified according to the hazard they protect (such as ordinary hazard or in-rack exposure protection), additives to the system (such as antifreeze or foam), or special connection to the system (such as multipurpose piping). Despite these various classifications, sprinkler systems can still be categorized as one of the four basic types listed below.

The *automatic wet pipe sprinkler system* is the most prevalent type because it is permanently charged with water, meaning that it is always ready for a fire. When the fusible element of the sprinkler reaches its predetermined temperature, it activates and water flows out of the orifice toward the deflector, causing the water to finely spray on the burning combustibles. An alarm check valve is installed where the water initially enters from the supply source. That valve has fittings to permit the connection of both local and remote location alarms. It also acts as a "check valve," permitting water to flow only toward the sprinkler. The disadvantage of the wet pipe sprinkler system is that they are not suitable for automatic fire protection in unheated buildings, and should a sprinkler be broken from the piping or a pipe or fitting fail, water will be discharged on to building contents that may be susceptible to water damage.

The *automatic dry pipe sprinkler system* is similar to the automatic wet pipe system, with the exception that the water in wet pipe system is replaced by compressed air (or nitrogen) and the alarm check valve is replaced by a dry pipe valve. Compressed air holds the dry pipe valve shut, thereby preventing water from entering the system. When a sprinkler activates the air is released, and the water pressure from the supply system opens the dry pipe valve. Water then enters the system, fills the piping, and is discharge by the open sprinkler. The use of a dry pipe sprinkler is subject to many limitations. They should only be used in low-temperature areas because of (1) delay time from releasing the compressed air to water availability and (2) internal pipe corrosion and tuberculation from alternating wet and dry periods.

The *deluge system* simultaneously discharges water from every open sprinkler on the system. There are no fusible elements in the sprinklers or spray nozzles to hold back the water. The system turns on when a "deluge" valve at the water supply side automatically opens. The system is typically actuated by heat detectors mounted above the open sprinklers. Most deluge systems can also be manually actuated. One disadvantage to this system is water damage can be extensive because of the amount of water that is used with all of the open sprinklers.

The *pre-action system* is similar to a deluge system with closed heads. Before the water can be released, two conditions must be satisfied. First, the fusible element of the sprinkler must be activated and, second the detector must open the deluge valve. The advantage to this system is that it reduces the amount of accidental discharge to water-sensitive equipment. The disadvantage is that the system is more expensive and complicated than an automatic wet pipe system.

The effectiveness of a sprinkler installation depends on many factors. Some factors are characteristics of the system itself, such as the thermal rating and spacing of the sprinklers, the depth at which the individual sprinklers are mounted below the ceiling, and their pressure and flow characteristics. Other factors are characteristics of the building or compartment in which the system is installed. Compartment characteristics include the height of the ceiling; the area of the compartment; and the presence of openings, joists, or ventilation currents at the ceiling level, which can affect the flow of hot gases. Still other factors depend upon the type of fire load in the compartment, such as the type of combustible and the closeness and height of its stacking, which can affect both the rate of fire development and the ability of the sprinkler system to control the fire.

As previously stated, sprinklers are the most reliable thermosensitive devices, but many factors can cause them to fail. A lack of available water caused by a closed water supply valve; the water supply header may break; and empty water tank. A fire pump could also fail to start automatically. If the pump is driven by a electric motor, such pump failures could result from a power failure. If the pump driven by a is diesel engine, pump failures could result from poor maintenance, dead batteries, or a lack of fuel. Other causes of failure could include shutting down for maintenance or repairs, allowing unusual items to enter water mains, corrosion or tuberculation in the sprinkler piping, corroded or painted sprinkler heads, partial sprinklers, combustible overloading, or an inadequate water supply.

Sprinkler technology is changing fast. The installation requirements for the common types of sprinklers are discussed in NFPA 13. Newer sprinklers that are not covered in NFPA 13 must be installed in accordance with their specific listing requirements.

There are three basic installation configurations of sprinklers (upright, pendant, and sidewall) and a number of different variations of the three. One of the newer sprinklers being widely used for

high challenge fires is the early suppression fast response (ESFR) sprinkler. Unlike other sprinklers that are designed only to control fires, the ESFR is designed with a fast response, large water droplet size, and the velocity to extinguish a high-challenge fire. As a result, very strict design and installation requirements must be followed when using an ESFR sprinkler.

The extended coverage sprinkler is another relatively new sprinkler technology. This usually reduces the number of required branch lines, thereby decreasing the cost of the system.

10.3 Operating Principles of Automatic Sprinklers

The two main functions of an automatic sprinkler system are to (1) detect a fire and (2) control it or prevent its growth. Automatic sprinklers are installed to protect property and occupants, give warning of fire existence and control only in burning areas.

The most common sprinklers have either soldered metallic element or a liquid filled bulb. The NFPA Handbook, 18th Edition, defines fusible sprinklers as common fusible-style automatic sprinklers that operate when a metal alloy of a predetermined melting point fuses. Various combinations of levers, struts, and links or other soldered members are used to reduce the force acting upon the solder so that the sprinkler is held closed with the smallest practical amount of metal and solder. This minimizes the time of operation by reducing the mass of fusible metal to be heated. The solders used with the automatic sprinklers are alloys of optimum fusibility composed primarily of tin, lead cadmium, and bismuth, which all have sharply defined melting points. Although an individual metal may have a low melting point, an alloy that includes that metal may have a lower melting point. The mixture of two or more metals that gives the lowest possible melting point is called an *eutectic alloy*.

Bulb sprinklers are a second style of operating element. Such sprinkler use a process in which heat causes the liquid in the bulb to expand and shatter the bulb at a predetermined temperature. This releases a seal valve and allows water to be sprayed onto the burning materials by the deflector. The predetermined temperature can be changed by adjusting the type and amount of liquid in the bulb. Bulb sprinklers are the most stable against atmospheric.

Other styles of thermosensitive operating elements that may be employed to provide automatic discharge include bimetallic discs, fusible alloy pellets, and chemical pellets.

10.3.1 Heat Transfer Characteristics for Heat Sensitive Elements

Figure 10-1 schematically illustrates the fundamental heat transfer characteristics for the sensitive element of the sprinkler. Conduction from the heated gas, convection from the heated gas, and radiation from the fire combine to transfer heat to the fusible element. Heat is always transferred away from the element by conduction to its supporting structure. Heat-sensitive elements are generally not perfectly insulated from other components of the sprinkler. The link mechanism holds the sprinkler closed and finite thermal resistance permits heat flow from the element. The quantity versus time history for the difference between the in-flow and out-flow of heat determines the time for the element to reach its operating temperature.

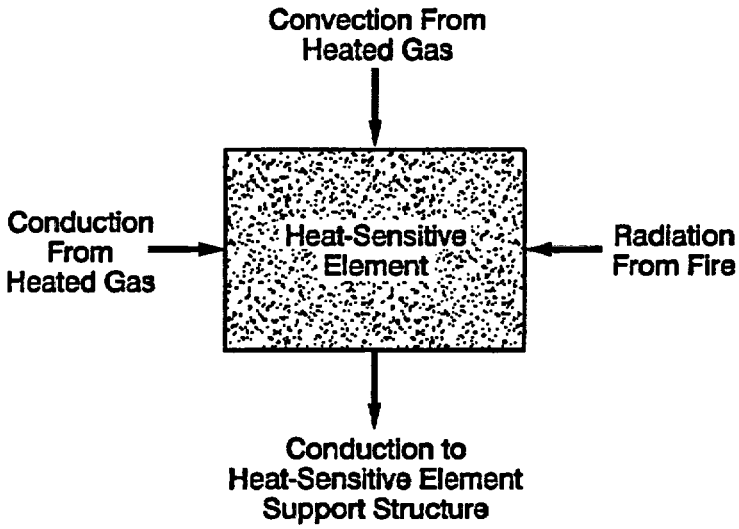

Figure 10-1 Heat Transfer Characteristics of the Heat-Sensitive Element of a Sprinkler

10.3.2 Sprinkler Dynamics

Figure 10-2 shows how the mechanical force exists in a solder-type link-and-lever-style automatic sprinkler. The construction shown is diagrammatic and does not represent any particular sprinkler This figure is reproduce from the NFPA Handbook, 18th Edition (Isman, 1997).

The mechanical force normally exerted on the top of the cap or valve is many times that developed by the water pressure below, so that the possibility of leakage, even from water hammer or exceptionally high pressure, is practically eliminated. The mechanical force in a link-and-lever sprinkler is produced by tension in the sprinkler frame, usually created by tightening the screw that holds the deflector down against the toggle joint formed by the levers. This pressure is applied against the valve or cap, but the line of force is not direct. The eccentricity of the loading permits a leveraged reduction of the force, first by the toggle effect of the two levers, and second by the mechanism of the link parts. The force resisted by the solder is made relatively low because solder of the composition needed to give the desired operating temperatures is subject to cold flow under high stress. The sprinkler frame or other parts usually posses a degree of elasticity to provide the energy that produces a positive, sharp release of the operating parts.

To ensure that cold flow will not be a problem, the laboratories that test and list sprinklers use statistical methods to simulate long-term loading of heat-responsive elements. Statistical methods are also employed to ensure that the crush strength of glass bulbs is sufficiently higher than the frame loads that will be applied to the bulbs.

10.3.3 Temperature Ratings of Automatic Sprinklers

Automatic sprinklers have various temperature ratings that are based on the UL standardized test (Operating temperature (bath) test) in which a sprinkler is immersed in a liquid and temperature of the liquid is raised very slowly until the sprinkler operates. In the bath test, an automatic sprinkler operate within a range having a maximum temperature not to excess of either 5 °C (10 °F) or 107-percent of the minimum temperature of the range, whichever is greater. For the purpose of this determination, the marked temperature rating is to be included as one of the values within the range, making a total of eleven values in the range. Water is to be used in bath tests of sprinklers that have operating temperature ratings of 79 °C (175 °F) or lower. Samples having operating temperature ratings of 80–302 °C (176–575 °F) are to be bath-tested in an oil having a flash point exceeding the test temperature (Bryan, 1990).

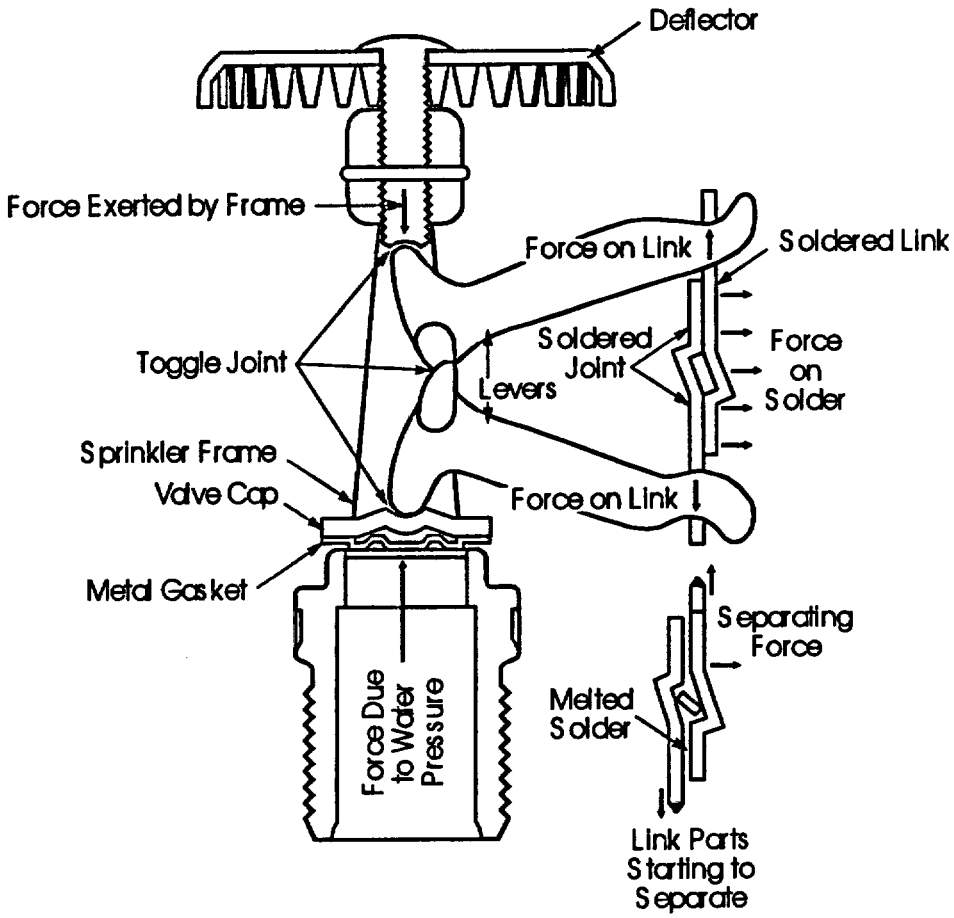

Figure 10-2 Representative Arrangement of a Solder-Type Link-and-Lever Automatic Sprinkler (Adapted from NFPA Handbook 18th Edition, 1997 with permission)

General sprinkler ratings are given in Table 10-2, based on the NFPA 13, "Standard for Installation of Sprinkler Systems".

Table 10-1. Temperature Ratings, Classification, and Color Coding of Automatic Sprinklers				
Maximum Ceiling Temperature °C (°F)	Temperature Rating °C (°F)	Temperature Classification	Color Code	Glass Bulb Color
38 (100)	57 to 77 (135 to 170)	Ordinary	Uncolored or black	Orange or red
66 (150)	79 to 107 (175 to 225)	Intermediate	White	Yellow or green
107 (225)	121 to 149 (250 to 300)	High	Blue	Blue
149 (300)	163 to 191 (325 to 375)	Extra high	Red	Purple
191 (375)	204 to 246 (400 to 475)	Very extra high	Green	Black
246 (475)	260 to 302 (500 to 575)	Ultra high	Orange	Black
329 (625)	343 (650)	Ultra high	Orange	Black

The temperature rating of each fusible-element-style automatic sprinkler is typically stamped on the soldered link. For bulb sprinklers, the temperature rating must be stamped or cast on some visible part of the sprinkler such as the deflector. Color codes are also used for glass bulbs and frame arms of fusible-element sprinklers. In addition, the recommended maximum room temperature is restricted for both bulbs and fusible-element sprinklers because fusible-element begins to lose its strength somewhat below its actual melting point. Premature operation of a solder sprinkler usually depends on the extent to which the normal room temperature is exceeded, the duration of the excessive temperature, and the load on the operating parts of the sprinkler. While glass bulb sprinklers do not lose strength at temperatures close to their operating temperatures, using them at such temperatures can result in continuous loss and reforming of the air bubble, which creates stresses on the bulb (NFPA Handbook, 18th Edition, 1997). Table 10-2 provide temperature ratings for sprinklers.

Table 10-2. Generic Sprinkler Temperature Rating ($T_{activation}$)		
Temperature Classification	Range of Temperature Ratings °C (°F)	Generic Temperature Ratings °C (°F)
Ordinary	57 to 77 (135 to 170)	74 (165)
Intermediate	79 to 107 (175 to 225)	100 (212)
High	121 to 149 (250 to 300)	135 (275)
Extra high	163 to 191 (325 to 375)	177 (350)
Very extra high	204 to 246 (400 to 475)	232 (450)
Ultra high	260 to 302 (500 to 575)	288 (550)
Ultra high	343 (650)	288 (550)

The concept of a response time index (RTI) was developed by Factory Mutual Research Corporation (FMRC) to be a fundamental measure of thermal sprinkler sensitivity. A sprinkler's RTI is determined in plunge tests with a uniform gas flow of constant temperature and velocity and can be used to predict the sprinkler's activation time in a fire environment. The RTI was developed under the assumption that conductive heat exchange between the sensing element and supportive parts is negligible. The RTI is a function of the time constant, τ, of the sprinkler which is related to the mass and surface area of the sprinkler thermal element. Faster sprinklers have low RTIs and smaller time constants. Sprinklers thermal elements with low time constants have low ratios of mass to surface area. This is the basis of quick-response sprinklers. The RTI is defined by the following equation:

$$RTI = \frac{m_e \; c_{p(e)}}{h_e \; A_e} \sqrt{u_{jet}} \qquad (10\text{-}1)$$

Where:

m_e = mass of element (kg)
$c_{p(e)}$ = specific heat of element (kJ/kg-K)
h_e = convective heat transfer coefficient (kW/m^2-K)
A_e = surface area of element (m^2)
u_{jet} = velocity of gas moving past the sprinkler (m/sec)

Table 10-3 provide generic RTIs for sprinklers.

Table 10-3. Generic Sprinkler Response Time Index (RTI)	
Common Sprinkler Type	Generic Response Time Index RTI $(m\text{-}sec)^{1/2}$
Standard response bulb	235
Standard response link	130
Quick response bulb	42
Quick response link	34

NFPA 13 states that "ordinary-temperature-rated sprinklers shall be used throughout the buildings" unless the temperature of the building is other than normal. NFPA 13 goes onto define three cases that would follow in the event of an "abnormal" temperature: These cases are as follows:

(1) "When the maximum ceiling temperatures exceed 38°C (100°F), sprinklers with temperatures in accordance with the maximum ceiling temperatures of Table 10-1 shall be used".

(2) "Intermediate- and high-temperature sprinklers shall be permitted to be used throughout ordinary and extra hazard occupancies."

(3) Sprinkler should be installed with intermediate-temperature classification if they are "located within 12 in. (305 mm) to one side or 30 in. (762 mm) above an uncovered steam main, heating coil, or radiator; sprinklers under glass or plastic skylights exposed to direct rays of the sun; sprinklers in an unventilated, concealed space, under an uninsulated roof, or in an unventilated attic; or sprinklers in unventilated show windows having high-powered electric lights near the ceiling. Sprinklers within 2.1 m (7 ft) of a low pressure blow off valve that discharges free in a large room" should be classified with high-temperature classification. Sprinklers protecting commercial-type cooking equipment and ventilation systems shall be of the high-or extra-high-temperature classification as determined by use of a temperature measuring device."

10.3.4 Sprinkler Activation

As part of a fire hazard analysis, it is often desirable to estimate both the burning characteristics of selected fuels and their effects in enclosures, as well as when fire protection devices (such as automatic sprinklers or heat and smoke detectors) will activate for specific fire conditions. Equations are available to permit the user to estimate these effects, principally on the basis of experimental correlations.

It has been determined experimentally that convective heat transfer is the most important element in activating sprinklers. Convective heat transfer involves heat transfer through a circulating medium, which, in the case of fire sprinklers, is the room air. The air heated by the fire rises in a plume, entraining other room air as it rises. When the plume hits the ceiling, it generally splits to

produce a ceiling gas jet (ceiling jet refers to the relatively rapid gas flow in a shallow layer beneath the ceiling surface, which is driven by the buoyancy of the hot combustion products). The thickness of the ceiling jet flow is approximately 5 to 12-percent of the height of the ceiling above the fire source, with the maximum temperature and velocity occurring 1-percent of the distance from the ceiling to the fire source. The heat sensing elements of the sprinklers within this ceiling jet are then heated by conduction of the heat from the air.

Researchers have developed computer programs to calculate the response time of sprinklers installed below the unconfined ceilings. These programs can determine the time to operation for a user specified fire HRR history. They are convenient to use because they enable the analyst to avoid the tedious repetitive calculations needed to analyze a growing fire. However, an analyst can easily perform these calculations with a scientific hand calculator for steady fires that have a constant HRR. In cases requiring a more detailed analysis of a fire that has important changes in HRR over time, the fire may be represented as a series of steady fires occurring immediately after one another.

For steady-state fires, the time ($t_{activation}$) required to heat the sensing element of a suppression device from room temperature to operation temperature is given by the following equation (Budnick, Evans, and Nelson,1997):

$$t_{activation} = \frac{RTI}{u_{jet}} \ln\left(\frac{T_{jet} - T_a}{T_{jet} - T_{activation}}\right) \qquad (10\text{-}2)$$

Where:

$t_{activation}$ = sprinkler head activation time (sec)
RTI = response time index (m-sec)$^{1/2}$
u_{jet} = ceiling jet velocity (m/sec)
T_{jet} = ceiling jet temperature (°C)
T_a = ambient air temperature (°C)
$T_{activation}$ = activation temperature of sprinkler head (°C)

The expressions for estimating the maximum ceiling jet temperature and velocity as a function of ceiling height, radial position, and HRR were developed from analysis of experiments with large-scale fires having HRR from 668 kW to 98,000 kW. The expressions are given for two regions—one where the plume directly strikes the ceiling and the other outside the plume region where a true horizontal flow exists.

The ceiling jet temperature and velocity correlations of a fire plume are given by the following expressions:

$$T_{jet} - T_a = \frac{16.9\ \dot{Q}^{\frac{2}{3}}}{H^{\frac{5}{3}}} \qquad \text{for } \frac{r}{H} \le 0.18 \qquad (10\text{-}3)$$

$$T_{jet} - T_a = \frac{538 \left(\frac{\dot{Q}}{r}\right)^{\frac{2}{3}}}{H} \quad \text{for} \frac{r}{H} > 0.18 \qquad (10\text{-}4)$$

$$u_{jet} = 0.96 \left(\frac{\dot{Q}}{H}\right)^{\frac{1}{3}} \quad \text{for} \frac{r}{H} \leq 0.15 \qquad (10\text{-}5)$$

$$u_{jet} = \frac{0.195 \ \dot{Q}^{\frac{1}{3}} \ H^{\frac{1}{2}}}{r^{\frac{5}{6}}} \quad \text{for} \frac{r}{H} > 0.15 \qquad (10\text{-}6)$$

Where:

T_{jet} = ceiling jet temperature (°C)
T_a = ambient air temperature (°C)
$\dot{Q}$ = heat release rate of the fire (kW)
r = radial distance from the plume centerline to the sprinkler head (m)
H = distance from the top of the fuel package to the ceiling level (m)
u_{jet} = ceiling jet velocity (m/sec)

The above correlations are used extensively to calculate the maximum temperature and velocity in the ceiling jet at any distance, r, from the fire axis. Note that the regions for which each expression is valid are given as a function of the ratio of the radial position, r, to the ceiling height, H. Moving away from the centerline of the plume jet, r/H increases. For regions where r/H>0.18, Equation 10-4 is used. Based on the cases where the hot gases have begun to spread under a ceiling located above the fire, Equation 10-3 applies for a small radial distance, r, from the impingement point (see Figure 10-3).

As with the velocities in the ceiling jet flow, u_{jet}, there are two region, under a ceiling including (1) one close to the impingement point where velocities are nearly constant and (2) another farther away where velocities vary with radial position.

The ceiling jet temperature is important in fire safety because it is generally the region where sprinklers are located; therefore, knowledge of the temperature and velocity of the ceiling jet as a function of position enables us to estimate the sprinklers response time.

The temperature and velocity of a ceiling jet also vary with the depth of the jet. Moving away from the ceiling, the temperature increases to a maximum, then decreases closer to the edge of the jet. This profile is not symmetric as it is with a plume, where the maximum occurs along the plume centerline.

With knowledge of plume ceiling jet temperature and velocity, we can estimate the actuation time of a sprinkler, if we also know the spacing and the speed or thermal inertia of the sprinkler. The response of a sprinkler head is given by its RTI.

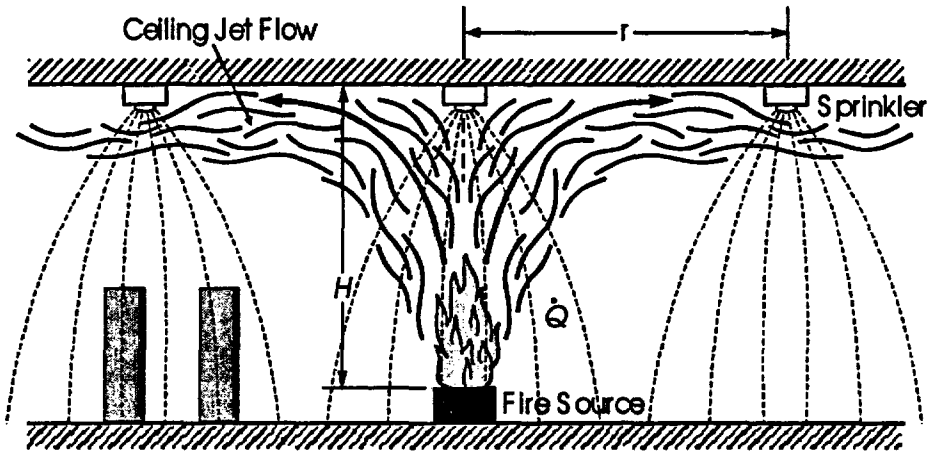

Figure 10-3 Ceiling Jet Flow Beneath an Unconfined Ceiling and Sprinkler Activation

10.3.5 Sprinkler Spray Interaction with Plume

Once a sprinkler head actuates, water must penetrate the plume to reach the burning fuel surfaces. For this reason, the droplets must have sufficient velocity and size to penetrate through the hot gases flowing in the opposite direction. If a droplet is too small, it will evaporate and/or be moved upward by the plume. For very high-energy release rate fires that grow quickly, it is sometimes necessary to use large drop sprinklers designed to yield droplet sizes and velocities that carry the drops through the plume and flame onto the burning surface.

10.4 Assumption and Limitations

The methods discussed in this chapter are subject to several assumptions and limitations.

(1) The method assumes the ceiling is unconfined, unobstructed, smooth, flat, and horizontal. The method does not account for hot gas layer effects due to walls or highly obstructed overhead.

(2) The plume ceiling jet correlations of temperature and velocity assume that the fire source is located away from walls and corners. The primary impact of walls and corners is to reduce the amount of entrained air into the plume. This has the effect of lengthening flames and causing the temperature in a plume to be higher at a given elevation than it would be in the open.

(3) The correlations for estimating the maximum ceiling jet temperature and velocity were developed for steady-state fires and plumes under unconfined ceiling (where the smoke layer does not develop below the ceiling jet during the time of interest).

(4) The plume ceiling jet correlations are valid for unconfined ceilings, as the environment for the outside ceiling jet is uniform in temperature and is atmospheric ambient.

(5) All calculations for determining time to operation only consider the convective heating of sensing elements by the hot fire gases. They do not explicitly account for any direct heating by radiation from the flames. The sprinkler is treated as a lumped mass model. The lumped model assumes that thermal gradients are neglected within the thermal element.

(6) This method does not apply to predict response time of sprinklers installed on heat collectors[1] far below the ceiling (in mid air). When sprinklers are too far below the ceiling, most of heat energy rises past the sprinklers and heat collectors and the sprinklers are not activated. Locating the sprinkler close to the ceiling ensures that the sprinkler will be in the hot gas layer, minimizing activation time and enabling the sprinkler to provide a fully developed water supply pattern to control the fire[2].

---

[1]A flat shield installed above sprinklers.

[2]NRC Information Notice 2002-24, "Potential Problems with Heat Collectors on Fire Protection Sprinklers," July 19, 2002.

10.5 Required Input for Spreadsheet Calculations

The user must be obtain following parameters before using the spreadsheet:

(1) heat release rate of the fire (kW)

(2) activation temperature of the sprinkler (°F)

(3) distance from top of fuel package to ceiling (ft)

(4) radial distance from plume centerline to sprinkler (ft)

(5) ambient air temperature (°F)

(6) sprinkler type

10.6 Cautions

(1) Use (Detector_Activation_Time.xls) and select "Sprinkler" spreadsheet on the CD-ROM for estimating sprinkler response time.

(2) Make sure to input parameters using the correct units.

10.7 Summary

This chapter discusses a method of calculating the response time of sprinkler under an unconfined smooth ceiling in response to steady-state fires. Parameters H and r both relate to the calculation of sprinkler actuation time.

10.8 References

Bryan, J.L., *Automatic Sprinkler and Standpipe Systems*, 2nd Edition, Appendix C, "Operating Temperature (Bath) Test," p. 505, National Fire Protection Association, Quincy, Massachusetts, 1990.

Budnick, E.K., D.D. Evans, and H.E. Nelson, "Simplified Fire Growth Calculations" Section 11, Chapter 10, *NFPA Fire Protection Handbook*, 18th Edition, A.E. Cote, Editor-in-Chief, National Fire Protection Association, Quincy, Massachusetts, 1997.

Isman, K.E., "Automatic Sprinklers" Section 6, Chapter 9, *NFPA Fire Protection Handbook*, 18th Edition, A.E. Cote, Editor-in-Chief, National Fire Protection Association, Quincy, Massachusetts, 1997.

NFPA 13, "Standard for Installation of Sprinkler Systems," 2002 Edition, National Fire Protection Association, Quincy, Massachusetts.

10. 9 Additional Readings

Alpert, R.L., "Calculation of Response Time of Ceiling-mounted Fire Detectors," *Fire Technology*, Volume 8, pp. 181–195, 1972.

Alpert, R.L., and E.J. Ward, "Evaluation of Unsprinklered Fire Hazard," *Fire Safety Journal*, Volume 7, No. 177, 1984.

Bryan, J.L., *Fire Suppression and Detection Systems*, Macmillan Publishing Company, New York, 1993.

Fire Dynamics Course Guide, Federal Emergency Management Agency (FEMA), United States Fire Administration (USFA), National Emergency Training Center, Emmitsburg, Maryland, 1995.

Heskestad, G., "Fire Plumes," Section 2, Chapter 2, *SFPE Handbook of Fire Protection Engineering*, 2nd Edition, P.J. DiNenno, Editor-in-Chief, National Fire Protection Association, Quincy, Massachusetts, 1995.

Schifiliti, R.P., B.J. Meacham, and R.P. Custer, "Design of Detection Systems," Section 4, Chapter 1, *SFPE Handbook of Fire Protection Engineering*, 2nd Edition, P.J. DiNenno, Editor-in-Chief, National Fire Protection Association, Quincy, Massachusetts, 1995.

This page intentionally left blank.

10.10 Problems

Example Problem 10.10-1

Problem Statement

A fire with $\dot{Q}$ = 1,000 kW occurs in a space that is protected with sprinklers. Sprinklers are rated at 165 °F (74 °C) [standard response link with RTI = 130 (m-sec)$^{1/2}$] and located 9.8 ft (3 m) on center. The ceiling is 9.8 ft (3.0 m) above the fire. The ambient temperature is 68°F. Would the sprinklers activate, and if so how long would it take for them to activate?

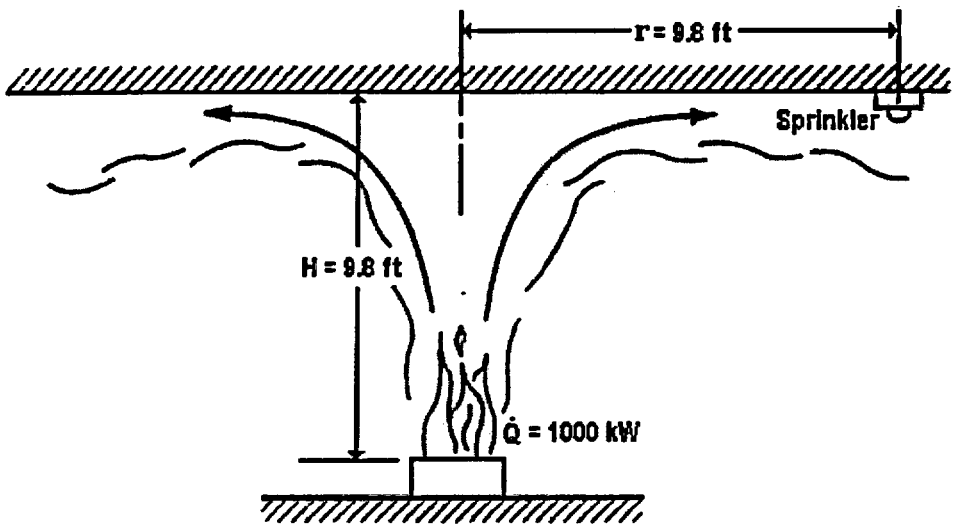

Solution

Purpose:
(1) Determine if the sprinklers will be activated for the fire scenario.
(2) If the sprinkles are activated, how long it take for them to activate?

Assumptions:
(1) The fire is located away from walls and corners
(2) The fire is steady state.
(3) The ceiling is unconfined.
(4) Only convective heat transfer from the hot fire gases is considered
(5) There is no heavily obstructed overhead

Spreadsheet (FDT^s) Information:
Use the following FDT^s:
(a) Detector_Activation_Time.xls (click on *Sprinkler*)

FDT^s Input Parameters:
-Heat Release Rate of the Fire $(\dot{Q})$ = 1,000 kW
-Distance from the Top of the Fuel Package to the Ceiling (H) = 9.8 ft
-Radial Distance from the Plume Centerline to the Sprinkler (r) = 9.8 ft

-Ambient Air Temperature (T_a) = 68 °F
-Select Type of Sprinkler = **Standard response link**
-Select Sprinkler Classification = **Ordinary**

Note: Ordinary classification has been selected because the rated value for the sprinklers in this problem (165 °F) is within the range of temperature ratings for ordinary sprinklers (135 °F - 170 °F).

Results*

Sprinkler Type	Sprinkler Activation Time ($t_{activation}$) (min.)
Standard response link	3

*see spreadsheet on next page

Spreadsheet Calculations

CHAPTER 10 - METHOD OF ESTIMATING SPRINKLER RESPONSE TIME

The following calculations estimate sprinkler activation time.
Parameters should be specified ONLY IN THE YELLOW INPUT PARAMETER BOXES.
All subsequent output values are calculated by the spreadsheet and based on values specified in the input parameters. This spreadsheet is protected and secure to avoid errors due to a wrong entry in a cell(s).
The chapter in the guide should be read before an analysis is made.

INPUT PARAMETERS

Heat Release Rate of the Fire (Q)	1000.00	kW	
Sprinkler Response Time Index (RTI)	130	$(m\text{-}sec)^{1/2}$	
Activation Temperature of the Sprinkler ($T_{activation}$)	165	°F	73.89 °C
Distance from the Top of the Fuel Package to the Ceiling (H)	9.80	ft	2.99 m
Radial Distance from the Plume Centerline to the Sprinkler (r)	9.80	ft	2.99 m
Ambient Air Temperature (T_a)	68.00	°F	20.00 °C
			293.00 K
Convective Heat Release Fraction (χ_c)	0.70		
r/H = 1.00			

GENERIC SPRINKLER RESPONSE TIME INDEX (RTI)*

Select Type of Sprinkler

Standard response link

Scroll to desired sprinkler type then Click on selection

Common Sprinkler Type	Generic Response Time Index RTI $(m\text{-}sec)^{1/2}$
Standard response bulb	235
Standard response link	130
Quick response bulb	42
Quick response link	34

Reference: Madrzykowski, D., "Evaluation of Sprinkler Activation Prediction Methods" ASIAFLAM'95, International Conference on Fire Science and Engineering, 1st Proceeding, March 15-16, 1995, Kowloon, Hong Kong, pp. 211-218.

***Note: The actual RTI should be used when the value is available.**

GENERIC SPRINKLER TEMPERATURE RATING ($T_{activation}$)*

Select Sprinkler Classification

Ordinary

Scroll to desired sprinkler class then Click on selection

Temperature Classification	Range of Temperature Ratings (°F)	Generic Temperature Ratings (°F)
Ordinary	135 to 170	165
Intermediate	175 to 225	212
High	250 to 300	275
Extra high	325 to 375	350
Very extra high	400 to 475	450
Ultra high	500 to 575	550
Ultra high	650	550

Reference: Automatic Sprinkler Systems Handbook, 6th Edition, National Fire Protection Association, Quincy, Massachusetts, 1994, Page 67.

***Note: The actual temperature rating should be used when the value is available.**

ESTIMATING SPRINKLER RESPONSE TIME

Reference: *NFPA Fire Protection Handbook*, 18th Edition, 1997, Page 11-97.

$$t_{activation} = (RTI/(vu_{jet})) (\ln (T_{jet} - T_a)/(T_{jet} - T_{activation}))$$

Where
- $t_{activation}$ = sprinkler activation response time (sec)
- RTI = sprinkler Response Time Index $(m\text{-}sec)^{1/2}$
- u_{jet} = ceiling jet velocity (m/sec)
- T_{jet} = ceiling jet temperature (°C)
- T_a = ambient air temperature (°C)
- $T_{activation}$ = activation temperature of sprinkler (°C)

Ceiling Jet Temperature Calculation

$T_{jet} - T_a = 16.9 (Q_c)^{2/3}/H^{5/3}$ for r/H = 0.18

$T_{jet} - T_a = 5.38 (Q_c/r)^{2/3}/H$ for r/H > 0.18

Where T_{jet} = ceiling jet temperature (°C)
T_a = ambient air temperature (°C)
Q_c = convective portion of the heat release rate (kW)
H = distance from the top of the fuel package to the ceiling level (m)
r = radial distance from the plume centerline to the sprinkler (m)

Convective Heat Release Rate Calculation

$Q_c = \chi_c Q$

Where Q = heat release rate of the fire (kW)
χ_c = convective heat release fraction

Q_c = 700 kW

Radial Distance to Ceiling Height Ratio Calculation

r/H = 1.00 r/H > 0.15

$T_{jet} - T_a$ = 5.38 (Qc/r)2/3/H
$T_{jet} - T_a$ = 68.46
T_{jet} = 88.46 (°C)

Ceiling Jet Velocity Calculation

$u_{jet} = 0.96\ (Q/H)^{1/3}$ for r/H = 0.15
$u_{jet} = (0.195\ Q^{1/3}\ H^{1/2})/r^{5/6}$ for r/H > 0.15

u_{jet} = ceiling jet velocity (m/sec)
Q = heat release rate of the fire (kW)
H = distance from the top of the fuel package to the ceiling (m)
r = radial distance from the plume centerline to the sprinkler (m)

Radial Distance to Ceiling Height Ratio Calculation

r/H = 1.00 r/H > 0.15

u_{jet} = (0.195 Q^1/3 H^1/2)/r^5/6
u_{jet} = 1.354 m/sec

Sprinkler Activation Time Calculation

$t_{activation} = (RTI/(\sqrt{u_{jet}}))\ (\ln (T_{jet} - T_a)/(T_{jet} - T_{activation}))$
$t_{activation}$ = 172.85 sec

The sprinkler will respond in approximately 2.88 minutes ANSWER

NOTE: If $t_{activation}$ = "NUM" Sprinkler does not activate

NOTE

The above calculations are based on principles developed in the NFPA Fire Protection Handbook 18th Edition, 1997. Calculations are based on certain assumptions and have inherent limitations. The results of such calculations may or may not have reasonable predictive capabilities for a given situation, and should only be interpreted by an informed user.
Although each calculation in the spreadsheet has been verified with the results of hand calculation, there is no absolute guarantee of the accuracy of these calculations.
Any questions, comments, concerns, and suggestions, or to report an error(s) in the spreadsheet, please send an email to nxi@nrc.gov.

NRR
Office of Nuclear Reactor Regulation

Example Problem 10.10-2

Problem Statement
If the sprinkles in Problem 10-1 are replaced by sprinkles with a response time index (RTI) of 235 $(m\text{-}sec)^{1/2}$, how long would it take for them to activate?

Solution

Purpose:
(1) Determine the activation time for the specified sprinkles under the fire scenario of Problem 10-1.

Assumptions:
(1) The fire is located away from walls and corners
(2) The fire is steady state
(3) The ceiling is unconfined
(4) Only convective heat transfer from the hot fire gases is considered
(5) There is no heavily obstructed overhead

Spreadsheet (FDT^s) Information:
Use the following FDT^s:
(a) Detector_Activation_Time.xls (click on *Sprinkler*)

FDT^s Input Parameters:
-Heat Release Rate of the Fire $(\dot{Q})$ = 1000 kW
-Distance from the Top of the Fuel Package to the Ceiling (H) = 9.8 ft
-Radial Distance from the Plume Centerline to the Sprinkler (r) = 9.8 ft
-Ambient Air Temperature (T_a) = 68 °F
-Select Type of Sprinkler = **Standard response bulb**
-Select Sprinkler Classification = **Ordinary**
Note: The RTI value of 235 $(m\text{-}sec)^{1/2}$ corresponds to Standard response bulb sprinkle. Ordinary classification has been selected because the rated value for the sprinklers in this problem (165 °F, same as Problem 10-1) is within the range of temperature ratings for ordinary sprinklers (135 °F - 170 °F).

Results*

Sprinkler Type	Sprinkler Activation Time ($t_{activation}$) (min.)
Standard response bulb	5.5

*see spreadsheet on next page

Spreadsheet Calculations

CHAPTER 10 - METHOD OF ESTIMATING SPRINKLER RESPONSE TIME

The following calculations estimate sprinkler activation time.
Parameters should be specified ONLY IN THE YELLOW INPUT PARAMETER BOXES.
All subsequent output values are calculated by the spreadsheet and based on values specified in the input parameters. This spreadsheet is protected and secure to avoid errors due to a wrong entry in a cell(s).
The chapter in the guide should be read before an analysis is made.

INPUT PARAMETERS

Heat Release Rate of the Fire (Q)	1000.00	kW	
Sprinkler Response Time Index (RTI)	235	$(m\text{-}sec)^{1/2}$	
Activation Temperature of the Sprinkler ($T_{activation}$)	165	°F	73.89 °C
Distance from the Top of the Fuel Package to the Ceiling (H)	9.80	ft	2.99 m
Radial Distance from the Plume Centerline to the Sprinkler (r)	9.80	ft	2.99 m
Ambient Air Temperature (T_a)	68.00	°F	20.00 °C
			293.00 K
Convective Heat Release Fraction (χ_c)	0.70		
r/H = 1.00			

GENERIC SPRINKLER RESPONSE TIME INDEX (RTI)*

Select Type of Sprinkler

Standard response bulb

Scroll to desired sprinkler type then Click on selection

Common Sprinkler Type	Generic Response Time Index RTI $(m\text{-}sec)^{1/2}$
Standard response bulb	235
Standard response link	130
Quick response bulb	42
Quick response link	34

Reference: Madrzykowski, D., "Evaluation of Sprinkler Activation Prediction Methods" ASIAFLAM'95, International Conference on Fire Science and Engineering, 1st Proceeding, March 15-16, 1995, Kowloon, Hong Kong, pp. 211-218.

***Note: The actual RTI should be used when the value is available.**

GENERIC SPRINKLER TEMPERATURE RATING ($T_{activation}$)*

Select Sprinkler Classification

Ordinary

Scroll to desired sprinkler class then Click on selection

Temperature Classification	Range of Temperature Ratings (°F)	Generic Temperature Ratings (°F)
Ordinary	135 to 170	165
Intermediate	175 to 225	212
High	250 to 300	275
Extra high	325 to 375	350
Very extra high	400 to 475	450
Ultra high	500 to 575	550
Ultra high	650	550

Reference: Automatic Sprinkler Systems Handbook, 6th Edition, National Fire Protection Association, Quincy, Massachusetts, 1994, Page 67.

***Note: The actual temperature rating should be used when the value is available.**

ESTIMATING SPRINKLER RESPONSE TIME

Reference: *NFPA Fire Protection Handbook*, 18th Edition, 1997, Page 11-97.

$$t_{activation} = (RTI/(vu_{jet})) (\ln (T_{jet} - T_a)/(T_{jet} - T_{activation}))$$

Where $t_{activation}$ = sprinkler activation response time (sec)
RTI = sprinkler Response Time Index $(m\text{-}sec)^{1/2}$
u_{jet} = ceiling jet velocity (m/sec)
T_{jet} = ceiling jet temperature (°C)
T_a = ambient air temperature (°C)
$T_{activation}$ = activation temperature of sprinkler (°C)

Ceiling Jet Temperature Calculation

$T_{jet} - T_a = 16.9 (Q_c)^{2/3}/H^{5/3}$ for r/H = 0.18

$T_{jet} - T_a = 5.38 (Q_c/r)^{2/3}/H$ for r/H > 0.18

Where T_{jet} = ceiling jet temperature (°C)
T_a = ambient air temperature (°C)
Q_c = convective portion of the heat release rate (kW)
H = distance from the top of the fuel package to the ceiling level (m)
r = radial distance from the plume centerline to the sprinkler (m)

Convective Heat Release Rate Calculation

$Q_c = \chi_c Q$

Where Q = heat release rate of the fire (kW)
χ_c = convective heat release fraction

Q_c = 700 kW

Radial Distance to Ceiling Height Ratio Calculation

r/H = 1.00 r/H > 0.15

$T_{jet} - T_a$ = 5.38 (Qc/r)2/3/H
$T_{jet} - T_a$ = 68.46
T_{jet} = 88.46 (°C)

Ceiling Jet Velocity Calculation

$u_{jet} = 0.96\ (Q/H)^{1/3}$ for r/H = 0.15
$u_{jet} = (0.195\ Q^{1/3}\ H^{1/2})/r^{5/6}$ for r/H > 0.15

u_{jet} = ceiling jet velocity (m/sec)
Q = heat release rate of the fire (kW)
H = distance from the top of the fuel package to the ceiling (m)
r = radial distance from the plume centerline to the sprinkler (m)

Radial Distance to Ceiling Height Ratio Calculation

r/H = 1.00 r/H > 0.15

u_{jet} = (0.195 Q^1/3 H^1/2)/r^5/6
u_{jet} = 1.354 m/sec

Sprinkler Activation Time Calculation

$t_{activation} = (RTI/(vu_{jet}))\ (\ln (T_{jet} - T_a)/(T_{jet} - T_{activation}))$
$t_{activation}$ = 312.45 sec

The sprinkler will respond in approximately 5.21 minutes ANSWER

NOTE: If $t_{activation}$ = "NUM" Sprinkler does not activate

NOTE
The above calculations are based on principles developed in the NFPA Fire Protection Handbook 18th Edition, 1997. Calculations are based on certain assumptions and have inherent limitations. The results of such calculations may or may not have reasonable predictive capabilities for a given situation, and should only be interpreted by an informed user.
Although each calculation in the spreadsheet has been verified with the results of hand calculation, there is no absolute guarantee of the accuracy of these calculations.
Any questions, comments, concerns, and suggestions, or to report an error(s) in the spreadsheet, please send an email to nxi@nrc.gov.

NRR
Office of Nuclear Reactor Regulation

This page intentionally left blank.

Example Problem 10.10-3

Problem Statement

A floor based transient fire with $\dot{Q} = 1{,}500$ kW occurs in a cable spreading room (CRS) protected with a wet pipe sprinkler system. Heat collectors are installed on each sprinkler under the safety-related cable trays to control a floor based transient fire. The Fire sprinklers are 165 °F [standard response bulb with RTI 235 $(\text{m-sec})^{1/2}$] rated and located 10 ft on the center and the ceiling is 18 ft above the fire. The sprinklers with heat collectors are located approximately 8 ft above the floor. Would the sprinkler activate?, and how long it take for them to activate?.

This page intentionally left blank.

CHAPTER 11. ESTIMATING SMOKE DETECTOR RESPONSE TIME

11.1 Objectives

This chapter has the following objectives:

- Introduce the critical factors that influence smoke detector performance.
- Identify the various types of smoke detectors.
- Describe how to calculate the response time of a smoke detector

11.2 Introduction

Reliable fire detection is essential to fire protection in nuclear power plants (NPP) applications, as it relates to both fire control or extinguishment and safe evacuation of occupants. Most of the devices associated with fire detection and suppression are located near the ceiling surfaces. In the event of a fire, hot gases in the fire plume rise directly above the burning fuel and impinge upon the ceiling. The ceiling surface causes the flow to turn and move horizontally beneath the ceiling to other areas of the building located at some distance from the fire. The response of detection devices (heat/smoke detectors) and sprinklers installed below the ceiling submerged in this hot flow of combustion products provides the basis for the building's active fire protection features.

Smoke and heat detectors are best suited for fire detection in confined spaces, where rapid heat generation can be expected in the event of a fire. Smoke and heat detectors have been installed extensively in most NPPs. Generally, such detectors are installed as part of a building-wide alarm system, which typically alarms in the main control room (MCR). The purpose of such systems is to provide early warning to building occupants, and rapid notification of the fire brigade. Some detection devices will also perform the function of automatically actuating suppression systems and interfacing with other building systems such as heating, ventilation, and air-conditioning (HVAC).

Detection is critical to fire safety in NPPs since a potential fire hazard may jeopardize safe plant shutdown. Consequently, safety-related systems must be protected before redundant safety-related systems become damaged by a fire.

Throughout the nuclear industry there has been considerable responsive action relative to the nuclear safety-related fire protection and incorporating sound fire protection principles in nuclear facility design. New standards, regulatory guides, and criteria have been publicized since the fire at the Browns Ferry Nuclear Power Plant (BFNP). Recognizing the unique characteristics of fires in NPPs, requirements have been established for locating smoke detectors. Particular emphasis has been given to establishing criteria for early warning detection of electrical cable fires. Figure 11-1 shows a qualitative relationship between time and damage for different speeds of fire development and average detection reaction and fire fighting.

11.3 Characteristics of Smoke Production

Two essential factors influencing the performance of smoke detectors are the particle size of the smoke and the fire-induced air velocities. The velocities created by the thermal column tend to

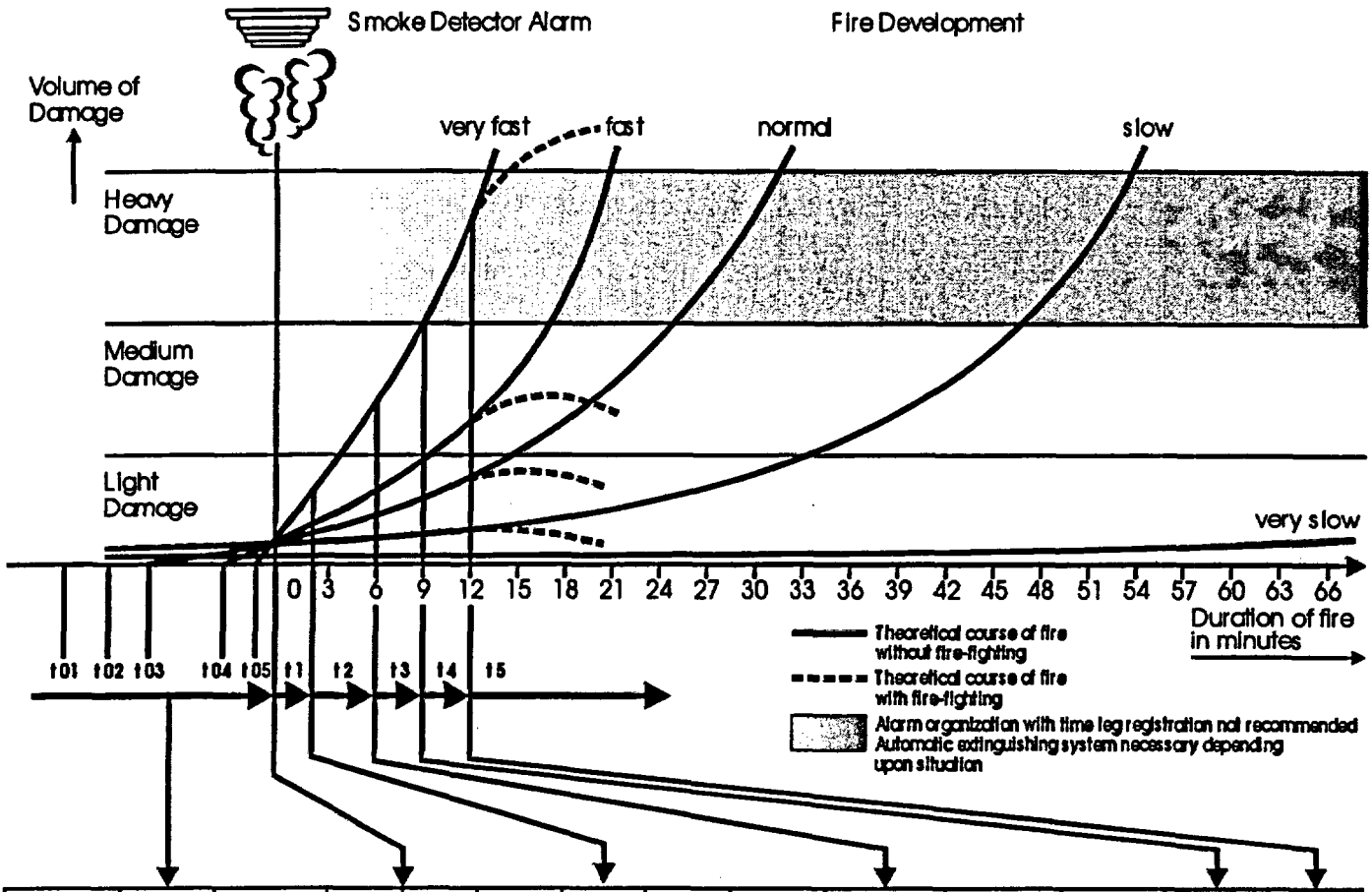

Incident	Start of Fire	Incipient phase before fire detection by fire alarm	Early warning detector detects fire	Start of RS check 1*	Reaction of operating personnel	Cancelling of RS check 1*	Start of RS check 2*	Investigate source of signal	Decision: - Emergency: Press alarm push-button, alerting fire department	Start of initial rescue and fire-fighting operations	Assembly time of fire department	Turn-out time of fire department	Start co-ordinating fire-fighting
Time point	t01 - t05	t01 - t05/t1	t1	t1	t1 - t2	t2	t2	t2 - t3	t3	t3	t3 - t4	t4 - t5	t5
Time requirement ϕ	—	unknown	—	—	ca. 2 min.	—	—	ca. 4 min.	—	—	ca. 3 min.	ca. 3 min.	—
ϕ Time requirement total	—	—	—	—	—	ca. 2 min.	—	—	ca. 6 min.	—	—	ca. 12 min.	—
Detection phase				Reaction, assembly and fire-fighting phase									

* RS check = Reconnaissance squad check

Figure 11-1 Qualitative Relationship Between Time and Damage for Different Speeds of Fire Development and Average Detection, Reaction, and Fire Fighting

diffuse the smoke through the upper wall and ceiling regions of the enclosure where the particles enter the detector and activate the unit. For example, residential detectors respond effectively to air flow velocities above 50 ft/min generated by flaming combustion. The same detectors may fail to respond when the fire-induced thermal column velocities created by the smoldering fire are below 30 ft/min.

Smoke production of a given fuel material varies with the sample size, arrangement, and configuration of the fuel; material moisture content; and ignition energy. Custer and Bright (1974) have stated that the earliest indication of a fire occurrence usually involves the heating of materials during the pre-ignition stage, which produces submicron particles ranging in size from $5x10^{-4}$–$1x10^{-3}$ micrometer. Custer and Bright also reported that the size of the particle produced by the diffusion flame combustion will varies with the heating of the atmosphere and the development of the fire progressing from smoldering to flaming combustion. Larger particles are formed by coagulation, with the particle size distribution varying between 0.1 micrometer and 4.0 micrometers. The smaller particles, below 0.1 micrometer, tend to disappear as a result of the formation of larger particles by coagulation, while the larger particles tend to settle out through the process of sedimentation. The particle size appears to be one of the most critical variables relative to the operation and performance of the specific smoke detector unit, considering that the detector is suitably located to be exposed to the smoke concentrations, and it is designed to enhance the entry of smoke into the detector unit.

Budnick (1984) states that the critical variables affecting the activation of a smoke detector are as follows:

> *"A smoke detector responds to an accumulation of smoke particulate within the device's sensing chamber. In a developing fire, the response will depend on a complex interrelationship of environmental factors such as fire size and growth rate, fuel type and smoke generation rate, room geometry and ventilation, and detector characteristics such as location, smoke entry characteristics and predetermined detector sensitivity thresholds."*

Relative to the rate of fire development, diffusion flame combustion appears to vary with the velocity of the flame spread, which is influenced by fuel arrangement and configuration, ventilation velocity, oxygen concentrations, and energy input at ignition.

11.4 Operating Principles of Smoke Detectors

Typically, a smoke detector will detect most fires more rapidly than a heat detector. Visible products of combustion consist primarily of unconsumed carbon and carbon-rich particles, while invisible products of combustion consist of solid particles smaller than 5 microns, as well as various gases and ions. NFPA 72, National Fire Alarm Code®," defines the types of listed smoke detectors in the following manner:

- **Photoelectric light obscuration smoke detection** is the principle of using a light source and a photosensitive sensor onto which the principal portion of the source emission is focused. When smoke particles enter the light path, some of the light is scattered and some is absorbed, thereby reducing the light reaching the receiving sensor. The light reduction signal is processed and used to convey an alarm condition when it meets preset criteria (see Figure 11-2).

- **Photoelectric light scattering smoke detection** is the principle of using a light source and a photosensitive sensor arranged so that the rays from the light source do not normally fall onto the photosensitive sensor. When smoke particles enter the light path, some of the light is scattered bu reflection and refraction onto the sensor. The light signal is processed and used to convey an alarm condition when it meets preset criteria (see Figure 11-2).

- **Ionization smoke detection** is the principle of using a small amount of radioactive material to ionize the air between two differentially charged electrodes to sense the presence of smoke particles. Smoke particles entering the ionization volume decrease the conductance of the air by reducing ion mobility. The reduced conductance signal is processed and used to convey an alarm condition when it meets preset criteria (see Figure 11-3).

- **Combination detection** either responds to more than one of the fire phenomena or employs more than one operating principle to sense these phenomena. Typical examples are a combination of heat and smoke detectors or a combination of rate-of-rise and fixed-temperature heat detectors.

- **Projected beam detection** uses the principle of photoelectric light obscuration smoke detection, but the beam spans the protected area.

- **Air sampling detection** uses a piping or tubing distribution network that runs from the detector to the area(s) to be protected. An aspiration fan in the detector housing draws air from the protected area back to the detector through air sampling ports, piping, or tubing. At the detector, the air is analyzed for fire products.

As a class, smoke detectors using the ionization principle provide a somewhat faster response to high-energy (open flaming) fires, since such fires produce large numbers of the smaller smoke particles. Smoke detectors operating on the photoelectric principle tend to respond faster to the smoke generated by low-energy (smoldering) fires, which generally produce more of the larger smoke particles. However, each type of smoke detector is subjected to, and must pass, the same fires at testing laboratories in order to be listed by Underwriters Laboratories (UL).

Combustion product detectors of the ionization type are called spot detectors (meaning that the element is concentrated at a particular location), and those of the photoelectric type are available as both spot detectors and line detectors. The line detector means that detection is continuous along a path. Ionization detectors are usually found as spot detectors for area protection, and may be modified with air shields or sampling tubes for installation as air duct detectors. Projected beam photoelectric detectors are most often applied as line detectors for large area protection. Line detectors are also beneficial in areas with high ceilings. They give the earliest warnings of abnormal conditions in these applications by responding to the smoke particles produced by fires. By contrast spot detectors are typically located in various areas of the building. They typically protect areas up to 84 m^2 (900 ft^2) depending on ceiling surface conditions and room height. Ionization and photoelectric detectors offer the greatest potential in residential safety. Some ionization and photoelectric detectors are also manufactured with dual modes of operation. Specifically, a fixed-temperature, thermal-activation device is located in the detector.

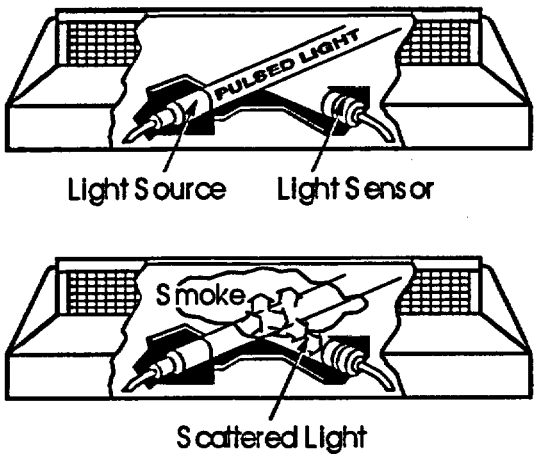

Figure 11-2 Illustration of the Photoelectric Principle

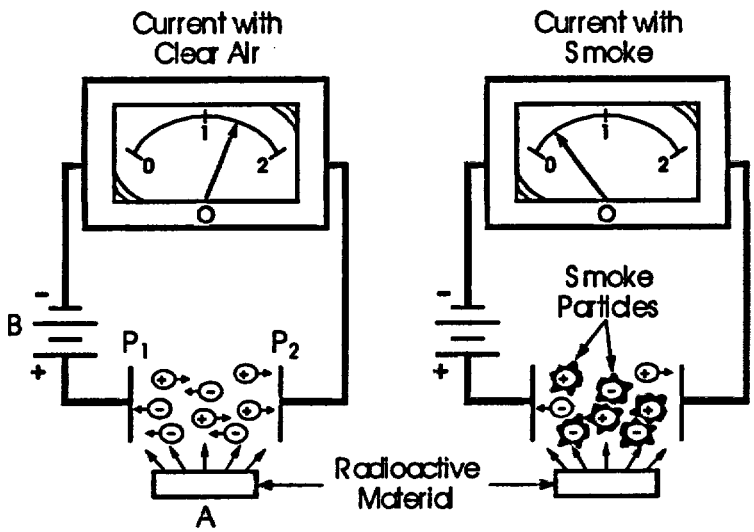

Figure 11-3 Illustration of the Ionization Principle

Most conventional smoke detectors provide a binary go/no-go form of detection. This means that other than alarm or no-alarm condition, no other information is transmitted to the fire alarm control unit. In order to provide a stable smoke detector, the system design must ensure that the sensitivity level of the detector matches the environment in the facility to be protected. Newer types of spot smoke detectors are often capable of providing information on the level of smoke at the device.

Current standards (such as NFPA 72, National Fire Alarm Code®) stipulate the spacing of smoke detectors based upon tests performed by nationally recognized testing laboratories such as Underwriters Laboratories (UL 268). An alternative performance design method can be found in Appendix B to NFPA 72 and is limited to flaming fires no ceilings higher than 8.5 m (30 ft). This method was developed from an experimental study conducted in the late 1970s for the Fire Detection Institute (FDI), however, it suffers from certain limitations related to the scope of the experiments conducted. Nevertheless, this design method introduced some important concepts, including design of a detection system to activate for a critical fire size (HRR) representing an acceptable threat level for the protected space. This is a departure from the earlier concept of detection "as quickly as possible," which often led to over sensitivity.

Technology improvements in microprocessor use in fire alarm systems have led to development of new smoke detector concepts. These new sensors use analog technology to measure the conditions in the protected area, or space, and transmit that information to the computer-based fire alarm control unit. Thus, the new sensors can report when components are too dirty to function properly or too sensitive as result of any number of conditions in the protected space. Analog sensors provide an essentially false-alarm-free system with regard to the conditions that are normally found in a building. This sensor technology also allows the system designer to adjust the sensor's sensitivity to accommodate the ambient environment or use an extra-sensitive setting to protect a high-value or mission-sensitive area. These sensors are available as photoelectric; ionization; or combination thermal, photoelectric, and ionization units. As fire alarm system technology continues to advances and existing NPP are upgraded, the analog sensors will be the sensors of choice for any system application, regardless of system size.

11.5 Smoke Detector Response

The response characteristics of smoke detectors are not as well understood as those of sprinklers and thermal detectors. Smoke detector alarm conditions depend on more than smoke concentration. Smoke particle sizes and optical or particle scattering properties can affect the smoke concentration value necessary to reach the alarm condition. For sprinklers and thermal detectors, measured values of response time index (RTI) characterize the lag time between gas temperature and sensing element temperature. For smoke detectors, there is no analogous method to characterize the lag time between gas flow smoke concentration and the smoke concentration within the sensing chamber. In the absence of understanding the many processes affecting smoke detector response, smoke detectors are considered to be low-temperature heat detectors with no thermal lag (i.e., low-RTI devices).

In 1983, Factory Mutual Research Corporation (FMRC), under contract with the Electric Power Research Institute (EPRI), conducted testing to assess the response of typical commercial smoke detectors (photoelectric and ionization) to fires in ventilated representative of utility environment (EPRI NP-2751). This testing evaluate detector response for a number of combustibles, including

both flaming and non-flaming cables and exposure fires. As a result, the testing led to development of smoke detector response relationships as a function of such parameters as: (1) the smoke transit time, (2) a detector time factor, (3) a detector sensitivity factor, (4) a ventilation factor, and (5) the non-dimensional detector spacing.

The response time of a smoke detector is comprised of two separate time, including the transit time for the smoke front to reach the detector and the time for detection or actuation (alarm), as illustrated by the following equation:

$$t_R = t_t + t_D \qquad (11\text{-}1)$$

Where:

t_R = detector response time (sec)
t_t = smoke transit time (sec)
t_D = detection time (sec)

The smoke transit time, t_t, is the time after ignition required for the smoke front from a fire source to reach various points under a flat ceiling and can be represented by the following correlation for both flaming and non-flaming fires:

$$t_t = 1.1\frac{r}{H} + 0.38 \qquad (11\text{-}2)$$

Where:

t_t = smoke transit time (sec);
r = radial distance from the fire axis to the smoke detector (m)
H = ceiling height of the compartment (m)

The smoke detection time, t_D, is a function of the detector sensitivity factor for the types of combustibles. The detection time correlation for the threshold detection time for a given detector spacing (r/H), ceiling height (H) and source fire size ($\dot{Q}_c$) is as follows:

$$t_D = \frac{45\frac{r}{H} + 8}{\left(\frac{\dot{Q}_c}{H}\right)^{\frac{1}{3}}} \qquad (11\text{-}3)$$

This correlation assumes that the fire (smoke source) is steady. The energy losses attributable to radiation from the flame are typically in the order of 20–40-percent of the total HRR($\dot{Q}$). The higher of these values are valid for the sootier and more luminous flames, often from fuels that burn with a low combustion efficiency. The convective HRR($\dot{Q}_c$) of the fire is therefore often in the range of $0.6\dot{Q}$ to $0.8\dot{Q}$, where $\dot{Q}$ is the total HRR.

11.6 Assumptions and Limitations

The method discussed in this chapter is subject to several assumptions and limitations.

(1) The fire is steady state.

(2) The forced ventilation system is off. As ventilation is increased, detector response times increase.

(3) Both flaming and non-flaming fire sources can be used.

(4) Caution should be exercised with this method when the overhead area is highly obstructed.

(5) The detectors are located at or very near to ceiling. Very near to ceiling would include code compliant detectors mounted on the bottom flange of structural steel beams. This method is not applicable to detectors mounted well below ceiling in free air.

11.7 Required Input for Spreadsheet Calculations

The user must obtain the following information before using the spreadsheet.

(1) heat release rate of the fire (kW)

(2) ceiling height of the compartment (ft)

(3) radial distance from the centerline of the plume (ft)

11.8 Cautions

(1) Use (Detector_Activation_Time.xls) and select "Smoke" spreadsheet in the CD-ROM for calculations.

(2) Make sure to use correct units when entering the input parameters.

11.9 Summary

This chapter discusses method of calculating the response time of smoke detectors under unobstructed ceilings in response to the steady-state fires. The method depend on the following steps:

(1) Calculate t_t, smoke transit time, from Equation 11-2.

(2) Calculate t_d, detection time, from Equation 11-3.

(3) Calculate t_R, detector response time, from Equation 11-1.

11.10 Reference

Budnick, E.K., "Estimating Effectiveness of State-of-the-Art Detectors and Automatic Sprinklers on Life Safety in Residential Occupancies," *Fire Technology*, Volume 20, No. 3, pp. 5–21, 1984.

Custer, R.L.P., and R.G. Bright, "Fire Detection: The State of the Art", Technical Note 839, Center of Fire Research, National Bureau of Standards, Washington DC, 1974.

EPRI NP-2751, "Fire Tests in Ventilated Rooms: Detection of Cable Tray and Exposure Fires," Electric Power Research Institute, Palo Alto, California, 1983.

NFPA 72, National Fire Alarm Code®, 1999 Edition, Appendix B: Engineering Guide for Automatic Fire Detection Spacing, National Fire Protection Association, Quincy, Massachusetts.

UL 268, "Smoke Detectors for Fire Protective Signaling Systems," 4th Edition, Underwriters Laboratory, Northbrook, Illinois, 1996.

11.11 Additional Readings

Bryan, J.L., *Fire Suppression and Detection Systems*, Macmillan Publishing Company, New York, 1993.

Schifiliti, R.P., and W.E. Pucci, "Fire Detection Modeling State of the Art," Fire Detection Institute (FDI), May 1996.

11.12 Problems

Example Problem 11.12-1

Problem Statement
Estimate the response time of a smoke detector located 10 ft radially the centerline of a 1,000 kW pool fire in a 13 ft tall compartment.

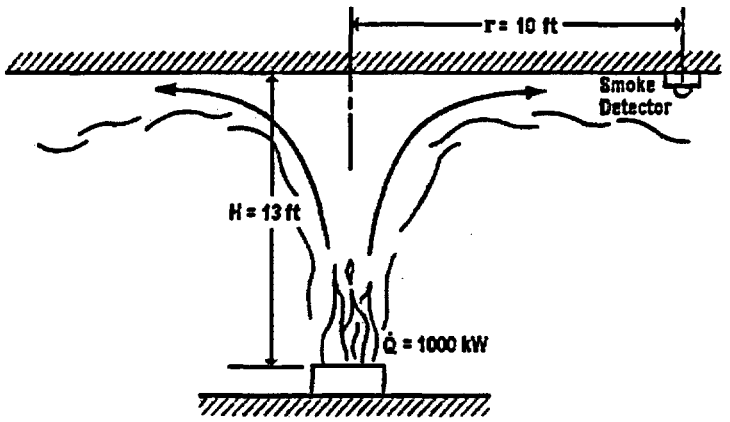

Example Problem 11-1: Fire Scenario with Smoke Detector

Solution

Purpose:

(1) Determine the response time of the smoke detector for the fire scenario.

Assumptions:

(1) The fire is steady state
(2) The forced ventilation system is off
(3) There is no heavily obstructed overhead

Spreadsheet (FDT^s) Information:

Use the following FDT^s:

(a) Detector_Activation_Time.xls (click on *Smoke*)

FDT^s Input Parameters:

-Heat Release Rate of the Fire $(\dot{Q})$ = 1,000 kW

-Ceiling Height (H) = 13 ft

-Radial Distance from the Plume Centerline to the Smoke Detector (r) = 10 ft

Results*

Heat ReleaseRate $\dot{Q}$ (kW)	Smoke Detector Activation Time (t_R) (sec)
1,000	10

*see spreadsheet on next page

Spreadsheet Calculations

CHAPTER 11 - METHOD OF ESTIMATING SMOKE DETECTOR RESPONSE TIME

The following calculations estimate smoke detector response time.
Parameters should be specified ONLY IN THE YELLOW INPUT PARAMETER BOXES.
All subsequent output values are calculated by the spreadsheet and based on values specified in the input parameters. This spreadsheet is protected and secure to avoid errors due to a wrong entry in a cell(s).
The chapter in the guide should be read before an analysis is made.

INPUT PARAMETERS

Heat Release Rate of the Fire (Q)	1000.00	kW	
Ceiling Height (H)	13.00	ft	3.96 m
Radial Distance from the Plume Centerline to the Smoke Detector (r)	10.00	ft	3.05 m
Ratio of Radial Distance to Ceiling Height (r/H)	0.77		
Convective Heat Release Fraction (χ_c)	0.50		

ESTIMATING SMOKE DETECTOR RESPONSE TIME

Reference: "Fire Tests in Ventilated Rooms, Detection of Cable Tray and Exposure Fires," EPRI NP-2751, Electric Power Research Institute, February 1983.

$t_R = t_t - t_D$

Where t_R = smoke detector response time (sec)
t_t = smoke transit time (sec)
t_D = detection time (sec)

Smoke Transit Time Calculation

$t_t = 1.1\ r/H + .38$

Where r = radial distance from the fire axis to the smoke detector (m)

$t_t =$ 1.23 sec

Convective Heat Release Rate Calculation

$Q_c = \chi_c Q$

Where Q = heat release rate of the fire (kW)
χ_c = convective heat release fraction

$Q_c =$ 500 kW

Smoke Detection Time Calculation

$t_D = (45\ r/H + 8.0) / (Q_c/H)^{1/3}$

Where r = radial distance from the plume centerline to the smoke detector (m)
H = ceiling height (m)
Q_c = convective heat release rate of the fire (kW)

$t_D =$ 8.50 sec

$t_R = t_t - t_D$

$t_R =$ 9.72 sec

Smoke detector will respond in approximately 0.16 minutes **ANSWER**

NOTE

The above calculations are based on fire testing results presented in EPRI NP-2751,
"Fire Tests in Ventilated Rooms: Detection of Cable Tray and Exposure Fires,"
Electric Power Research Institute, February 1993. The results of testing may or may not have reasonable predictive capabilities for a given situation, and should only be interpreted by an informed user.
Although each calculation in the spreadsheet has been verified with the results of hand calculation, there is no absolute guarantee of the accuracy of these calculations.
Any questions, comments, concerns, and suggestions, or to report an error(s) in the spreadsheet, please send an email to nxl@nrc.gov.

NRR

Office of Nuclear Reactor Regulation

This page intentionally left blank.

CHAPTER 12. ESTIMATING HEAT DETECTOR RESPONSE TIME

12.1 Objectives

This chapter has the following objectives:

- Explain where heat detectors are located.
- Identify the various types of heat detectors and how they work.
- Describe how to calculate the activation time of a heat detector.

12.2 Introduction

Heat detectors are one of the oldest form of automatic fire detection devices, and they typically have the lowest false alarm rate of all automatic fire detection devices. Nevertheless, they are generally the slowest to detect fires because they do not detect smoke. Rather, they respond either when the detecting element reaches a predetermined fixed temperature or when the temperature changes at a specified rate. Thus heat detectors usually do not provide enough early warning in case of a life-threatening situation. As a result, heat detectors are best suited for fire detection in a small confined space where rapidly building high-heat-output fires are expected, in areas where ambient conditions would not allow the use of other fire detection devices, or where speed of detection is not a primary consideration.

Heat detectors are generally located on or near the ceiling, where they can respond to the convected thermal energy of a fire. They may be used in combination with smoke detectors since smoke detectors usually activate before the flames and heat would are sufficient to alarm the heat detector. In general, heat detectors are designed to operate when heat causes a prescribed change in a physical or electrical property of a material or gas.

The following excerpts are from the procedure specified by Underwriters' Laboratories, Inc., for using thermal detectors in automatic fire detection systems. Notice that to prevent false alarms, detectors should be installed only after considering the limitation on their operational rating and the prevalent ceiling temperatures. For example, ordinary detectors rated from 57–74 °C (135–165 °F) should be installed only where ceiling temperatures do not exceed 38°C (100 °F).

12.3 Underwriters' Laboratories, Inc., Listing Information for Heat-Detecting Automatic Fire Detectors

"A heat-detecting type of automatic fire detector is an integral assembly of heat-responsive elements and non-coded electrical contacts, which function automatically under conditions of increase in air temperature. Listing under this heading applies to fire alarm heat detectors only and not to wiring or other appliances of which they form a part. Fire alarm heat detectors are of the fixed-temperature, combination fixed-temperature, and rate-of-rise or rate compensation types. There are basically two types: (1) spot-type is one in which the thermally sensitive element is a compact unit of small area, and (2) line-type is one in which the thermally sensitive element is continuous along the line. These heat detectors have been investigated for indoor use only unless otherwise indicated in the individual listing. Ordinarily heat detectors are intended for locations where normal ceiling temperatures prevail below 37.7 °C (below 100 °F). Locations where ceiling temperatures are likely to be unduly high, from sources of heat other than fire conditions such as

boiler rooms, dry kilns, etc., demand special consideration and selection of heat detectors operating normally at higher temperatures, and which are capable of withstanding high temperatures for long periods of time. Care should be exercised to select heat detectors having the proper temperature rating to guard against false alarms from premature operation. These detectors are intended to be installed in accordance with NFPA 72E-Automatic Fire Detectors. For ceiling temperatures exceeding 37.7 °C (100 °F), install 57.2 to 73.8 °C (135 to 165 °F) (ordinary) rating thermostats. For ceiling temperatures exceeding 37.7 °C (100 °F), but not 65.5 °C (150 °F), install 79.4 to 107.2 °C (175 to 225 °F) (intermediated) rating thermostats. For ceiling temperatures exceeding 65.5 °C (150 °F), but not 107.2 °C (225 °F), install 121.1 to 148.8 °C (250 to 300 °F) (high) rating thermostats. For ceiling temperatures exceeding 107.2 °C (225 °F), but not 148.8 °C (300 °F), install 162.7 to 182.2 °C (325 to 360 °F) (extra high) rating thermostats. Low-degree rated heat detectors are intended only for installation in areas having controlled temperature conditions at least -6.6 °C (20 °F) below rating. The spacings specified are for flat, smooth ceiling construction of ordinary height, generally regarded as the most favorable condition for distribution of heated air currents resulting from a fire. Under other forms of ceiling construction, reduced spacings may be required. The fire tests conducted to determine the suitability of the spacings are conducted in an 18.3 by 18.3 m (60 by 60 ft) room having a 4.8 m (15 ft, 9 in.) high smooth ceiling and minimum air movement. The test fire (denatured alcohol) is located approximately 0.91 m (3 ft.) above the floor and is of a magnitude so that sprinkler operation is obtained in approximately 2 minutes. For comparative purposes, automatic sprinklers rated at 71.7 °C (160 °F) are installed on a 3.05 by 3.05 m (10 by 10 ft.) spacing schedule in an upright position with the deflectors approximately 17.5 cm (7 in.) below the ceiling. At the maximum permissible spacing for the heat detectors, they must operate prior to operation of the sprinklers.

The placement and spacing of heat detecting devices should be based on consideration of the ceiling construction, ceiling height, room or space areas, spaced subdivisions, normal room temperature, possible exposure of the devices to abnormal heat (such as uninsulated steam pipes) or to draft conditions likely to be encountered at the time of a fire.

12.4 Operating Principle of Heat Detectors

Spot type heat detectors respond to temperature changes in the surrounding environment. They are designed to respond to the convected thermal energy of a fire. They detect at either a predetermined fixed temperature or at a specified rate of temperature rise. In general, a heat detector is designed to sense a prescribed change in a physical or electrical property of its material when exposed to heat.

12.4.1 Fixed Temperature Heat Detector

Fixed temperature detectors are intended to alarm when the temperature of their operating elements reaches specific points. The air temperature at the time of operation may be higher than the rated temperature due to the thermal inertia of the operating elements. This condition is called thermal lag. Fixed temperature heat detectors are available to cover a wide range of operating temperatures from 57 °C (135 °F) and higher. Higher temperature detectors are sometimes necessary so that detection can be provided in areas normally subjected to high ambient (nonfire) temperatures. Fixed temperature heat detectors are manufactured in seven temperature range groups, and the proper detector is selected based on the highest ambient temperature of the room for which it is designed. Fixed temperature detectors are available in several types.

12.4.1.1 Fusible-Element-Type

One type of fusible-element spot detector is the eutectic (fusible) metal type. Eutectic metal employs a mixture of either bismuth, lead, tin or cadmium which melts at a predetermined temperature. Eutectic metals that melt rapidly at a predetermined temperature are used to actuate the operating elements of the heat detector. When the element fuses, (i.e., melts) the spring action closes contacts and initiates an alarm. Devices using eutectic elements cannot be restored. When their element fuses, alarms are signaled by various mechanical or electrical means typically by a closed set of contacts.

12.4.1.2 Continuous Line-Type

One type of line detector uses a pair of wires in a normally open circuit enclosed in a braided sheath to form a single-cable assembly. When the predetermined temperature is reached, the insulation, which holds the conductors apart melts, and the two wires come in contact which initiates the alarm. The fused section of the cable must be replaced to restore the system. Alternately, this type of detectors may uses a stainless steel capillary tube containing a coaxial center conductor separated from the tube wall by a temperature-sensitive glass semiconducting material. As the temperature rises, the semiconductor decreases and allows more current to flow, thereby initiating the alarm.

12.4.1.3 Bimetallic-Type

These spot detectors are generally of two types, including (1) the bimetal strip and (2) the bimetal snap disc. As it is heated, the bimetal strip deforms in the direction of the contact point. The operating element of a snap disc device is a bimetal disc composed of two metals with different thermal growth rates formed into a concave shape in its unstressed condition. Generally, a heat detector is attached to the detector frame to speed the transfer of heat from the room air to the bimetal. As the disc (not part of the electrical circuit) is heated, the stresses developed in the two different metals cause it to suddenly reverse the curvature and become convex. This provides a rapid positive action that closes the alarm contacts. These devices are typically self-restoring after heat is removed.

12.4.2 Rate Compensation Heat Detectors

These spot type detectors respond when the temperature of the air surrounding the detector reaches a predetermined temperature, regardless of the rate of temperature rise. A typical example is a spot-type detector with a tubular casing of metal that tends to expand lengthwise as it is heated, and an associated contact mechanism that will close at a certain point in the elongation. A second metallic element inside the tube exerts an opposing force on the contacts, tending to hold them open. The forces are balanced so that, with a slow rate of temperature rise, there is more time for heat to penetrate to the inner element. This inhibits contact closure until the total device has been heated to its rated temperature level. However, with a fast rate of temperature rise, there is less time for heat to penetrate to the inner element. The element therefore exerts less of an inhibiting effect, so contact closure is obtained when the total device has been heated to a lower level. This, in effect, compensates for thermal lag.

12.4.3 Rate-of-Rise Heat Detectors

These spot type detectors operate when the room temperature rises at a rate which exceeds a predetermined value. For example, the effect of a flaming fire on the surrounding area is to rapidly increase air temperature in the space. A fixed temperature detectors will not initiate an alarm until the air temperature near the ceiling exceeds the design operating point. The rate-of-rise detector, however, will function when the rate of temperature increase exceeds a predetermined value, typically around 7 to 8 °C (12 to 15 °F) per minute. Rate-of-rise detectors are designed to compensate for the normal changes in ambient temperature [less than 6.7 °C (12 °F) per minute] that are expected under non-fire conditions.

12.4.4 Pneumatic Heat Detectors

In a pneumatic spot type heat detector, air heated in a tube or chamber expands, increasing the pressure in the tube or chamber. This exerts a mechanical force on a diaphragm that close the alarm contacts. If the tube or chamber were hermetically sealed, slow increases in ambient temperature, a drop in the barometric pressure, or both, would cause the detector to initiate an alarm regardless of the rate of temperature change. To overcome this, pneumatic detectors have a small orifice to vent the higher pressure that builds up during slow increases in temperature or during a drop in barometric pressure. The vents are sized so that when the temperature changes rapidly, as in a fire, the rate of expansion exceeds the venting rate and pressure rises. When the temperature rise exceeds 7 to 8 °C (12 to 15 °F) per minute, the pressure is converted to mechanical action by a flexible diaphragm. Pneumatic heat detectors are available for both line- and spot-type detectors.

12.4.4.1 Line-Type Heat Detectors

The line-type consists of metal tubing, in a loop configuration, attached to the ceiling of the area to be protected. Lines of the tubing are normally spaced not more than 9.1 m (30 ft) apart, not more than 4.5 m (15 ft) from a wall, and with no more than 305 m (1,000 ft) of tubing on each circuit. Also, a minimum of at least 5-percent of each tube circuit or 7.6 m (25 ft) of tube, whichever is greater, must be in each protected area. Without this minimum amount of tubing exposed to a fire condition, insufficient pressure would build up to achieve proper response.

In small areas where the line-type tube detector might have insufficient tubing exposed to generate sufficient pressures to close the alarm contacts, air chambers or rosettes of tubing are often used. These units act like a spot-type detector by providing the volume of air required to meet the 5 percent or 7.6 m (25 ft) requirement. Since a line-type rate-of-rise detector is an integrating detector, it will actuate either when a rapid heat rise occurs in one area of exposed tubing, or when a slightly less rapid heat rise takes place in several areas when tubing on the same loop is exposed. The pneumatic principle is also used to close contacts within spot-type detector. The difference between the line-and spot-type detectors is that the spot-type contains all of the air in a single container rather than in a tube that extends from the detectors assembly to the protected area(s).

12.4.5 Combination Heat Detectors

Many spot type heat detectors are available that utilize both the rate-rise and fixed-temperature principles. The advantage of units such as these is that the rate-of-rise elements will respond quickly to rapidly developing fires, while the fixed-temperature elements will respond to slowly developing smoldering fires when design alarm temperature is reached. The most common combination detector uses a vented air chamber and a flexible diaphragm for the rate-of-rise function, while the fixed temperature element is usually leaf-spring restrained by an eutectic metal. When the fixed temperature element reaches its design operating temperature, the eutectic metal fuses and releases the spring, which closes the contacts.

12.4.6 Electronic Spot-Type Thermal Detectors

These detectors utilize a sensing element consisting of one or more thermistors, which produce a change in electrical resistance in response to an increase in temperature. This resistance is monitored by associated electronic circuitry, and the detector responds when the resistance changes at an abnormal rate (rate-of-rise type) or when the resistance reaches a specific value (fixed-temperature type).

12.5 Fixed-Temperature Heat Detector Activation

Fixed-temperature heat detectors are generally modeled by calculating the heat transfer from the fire gases to the detector element, and the resultant temperature change. To simplify the calculation, all current detector models treat the detector as a "lumped mass". A lumped mass model assumes that there are no temperature gradients within the detector element. This assumption is reasonable for solder-type heat detectors, since the operating element has a low mass. With bimetallic-type detectors, the lumped mass assumption may introduce some error, since heat must be transferred to two slightly different parts.

Analytical methods for calculating detector temperature require that equations for temperature and velocity of fire gases as a function of time must be inserted into the basic heat transfer equation. The resulting differential equation must be integrated to arrive at an analytical solution to the heat transfer equation.

For steady-state fires, the time required to heat the sensing element of a suppression device from room temperature to operation temperature is given by (Budnick, Evans, and Nelson, 1997):

$$t_{activation} = \frac{RTI}{u_{jet}} \ln\left(\frac{T_{jet} - T_a}{T_{jet} - T_{activation}}\right) \qquad (12\text{-}1)$$

Where:

$t_{activation}$ = sprinkler head activation time (sec)
RTI = Response Time Index $(m\text{-}sec)^{1/2}$
u_{jet} = ceiling jet velocity (m/sec)
T_{jet} = ceiling jet temperature (°C)
T_a = ambient air temperature (°C)
$T_{activation}$ = activation temperature of detector (°C)

The RTI concept was developed by Factory Mutual Research Corporation (FMRC) to be a fundamental measure of thermal detector sensitivity. A detector's RTI is determined in plunge tests with a uniform gas flow of constant temperature and velocity and can be used to predict the detector's activation time in any fire environment. The RTI was developed under the assumption that conductive heat exchange between the sensing element and supportive parts is negligible. The RTI is a function of the time constant, τ, of the detector, which is related to the mass and surface area of the detector element. Faster detectors have low response time indices and smaller time constants. Detector elements with low time constants have low ratios of mass to surface area. The RTI is defined by the following equation:

$$RTI = \frac{m_e c_{p(e)}}{h_e A_e}\sqrt{u_{jet}} \qquad (12\text{-}2)$$

Where:

m_e = mass of element (kg)
$c_{p(e)}$ = specific heat of element (kJ/kg-K)
h_e = convective heat transfer coefficient (kW/m^2-K)
A_e = surface area of element (m^2)
u_{jet} = velocity of gas moving past the detector (m/sec)

The flow of heat and ceiling jet into a heat detector sensing element is not instantaneous; it occurs over a period of time. A measure of the speed with which heat transfer occurs (the thermal coefficient) is needed to accurately predict heat detector response. Called the detector time constant (τ_0), this measure should be determined by a validated test (Heskestad, 1976). For a given detector, the convective heat transfer coefficient (h_e) and τ are approximately proportional to the square root of the velocity (u) of the gases passing the detector. This relationship can be expressed as the characteristic response time index, RTI, for a given detector:

$$RTI \cong \tau u^{\frac{1}{2}} = \tau_0 u_0 \qquad (12\text{-}3)$$

Where:

RTI = response time index (m/sec)$^{1/2}$
τ_0 = detector time constant (sec)
u_0 = gas velocity (m/sec)

The detector time constant, τ_0, is measured in the laboratory at some reference velocity, u_0. This expression can be used to determine the detector's RTI.

UL-listed detector spacing can be used as a measure of detector sensitivity. Heskestad and Delichatsios (1977), analyzed UL test data and calculated the time constant, τ_0, for various combinations of UL-listed spacing and detector-operated temperature. The Subcommittee of NFPA 72 expanded that table to include a larger selection of detectors. The table is reproduce here as Table 12-1.

Table 12-1. Time Constant of Any Listed Detector							
Listed Spacing (ft)	Underwriter's Laboratories, Inc. (UL) Temperature Rating (°F)						FMRC (All Temperatures)
	128	135	145	160	170	196	
	Detector Time Constant, τ_0 (sec)						
10	400	330	262	195	160	97	196
15	250	190	156	110	89	45	110
20	165	135	105	70	52	17	70
25	124	100	78	48	32	-	48
30	95	80	61	36	22	-	36
40	71	57	41	18	-	-	-
50	59	44	30	-	-	-	-
70	36	24	9	-	-	-	-
Note: These times constants are based on an analysis of the UL and FMRC listing test procedures. This table is reproduced from NFPA 72, Appendix B, 1999 Edition.							

The time constants listed in Table 12-1 are based on a reference velocity of 1.5 m/sec (5 ft/sec). These time constants can be converted to RTI values be using Equation 12-4, as follows:

$$\mathrm{RTI} = \tau_0 \sqrt{1.5} \left(\frac{\mathrm{m}}{\mathrm{sec}}\right)^{\frac{1}{2}} \qquad (12\text{-}4)$$

Table 12-2 provides the calculated values of RTI based on the detector time constant (τ_0) in Table 12-1.

Table 12-2. Detector Response Time Index of Any Listed Detector							
Listed Spacing (ft)	Underwriter's Laboratories, Inc. (UL) Temperature Rating (°F)						FMRC (All Temperatures)
	128	135	145	160	170	196	
	Detector RTI $(m/sec)^{1/2}$						
10	490	404	321	239	196	119	240
15	306	233	191	135	109	55	135
20	325	165	129	86	64	21	86
25	152	123	96	59	39	-	59

Table 12-2. Detector RTI of Any Listed Detector (continued)							
Listed Spacing (ft)	Underwriter's Laboratories, Inc. (UL) Temperature Rating (°F)						FMRC (All Temperatures)
	128	135	145	160	170	196	
	Detector RTI $(m/sec)^{1/2}$						
30	116	98	75	44	27	-	44
40	87	70	50	22	-	-	-
50	72	54	37	-	-	-	-
70	44	29	11	-	-	-	-

The expressions for estimating the maximum ceiling jet temperature and velocity as a function of ceiling height, radial position, and HRR were developed from an analysis of experiments with large-scale fires having HRRs from 668 kW to 98,000 kW. The expressions are given for two regions—one where the plume directly strikes the ceiling and the other, outside the plume region where a true horizontal flow exists.

The ceiling jet temperature and velocity correlations of a fire plume are given by the following expression:

$$T_{jet} - T_a = \frac{16.9\ \dot{Q}^{\frac{2}{3}}}{H^{\frac{5}{3}}} \qquad \text{for } \frac{r}{H} \le 0.18 \qquad (12\text{-}5)$$

$$T_{jet} - T_a = \frac{5.38 \left(\frac{\dot{Q}}{r}\right)^{\frac{2}{3}}}{H} \qquad \text{for } \frac{r}{H} > 0.18 \qquad (12\text{-}6)$$

$$u_{jet} = 0.96 \left(\frac{\dot{Q}}{H}\right)^{\frac{1}{3}} \qquad \text{for } \frac{r}{H} \le 0.15 \qquad (12\text{-}7)$$

$$u_{jet} = \frac{0.195\ \dot{Q}^{\frac{1}{3}}\ H^{\frac{1}{2}}}{r^{\frac{5}{6}}} \qquad \text{for } \frac{r}{H} > 0.15 \qquad (12\text{-}8)$$

Where:

T_{jet} = ceiling jet temperature (°C)
T_a = ambient air temperature (°C)
$\dot{Q}$ = heat release rate of the fire (kW)
H = distance from the top of the fuel package to the ceiling level (m)

r = radial distance from the plume centerline to the detector (m)
u_{jet} = ceiling jet velocity (m/sec)

The above correlations are used extensively to calculate the maximum temperature and velocity in the ceiling jet at any distance, r, from the fire axis. Note that the regions for which each expression is valid are given as a function of the ratio of the radial position, r, to the ceiling height, H. Moving away from the centerline of the plume jet, r/H increases. So, for example, for regions where r/H>0.18, Equation 12-6 should be used. Based on the cases where the hot gases have begun to spread under a ceiling located above the fire, Equation 12-5 applies for a small radial distance, r, from the impingement point (see Figure 12-1).

As with the temperatures velocities in the ceiling jet flow, u_{jet}, there are two regions under a ceiling, including (1) one close to the impingement point where velocities are nearly constant and (2) another farther away where velocities vary with radial position.

The ceiling jet temperature is important in fire safety because it is generally the region where sprinklers are located; therefore, knowledge of the temperature and velocity of the ceiling jet as a function of position enables us to estimate the detector response time.

The temperature and velocity of a ceiling jet varies with the depth of the jet. Moving away from the ceiling, the temperature increases to a maximum, then decreases closer to the edge of the jet. This profile is not symmetric as it is with a plume, where the maximum occurs along the plume centerline.

With the knowledge of plume ceiling jet temperature and velocity, we can estimate the actuation time of a fixed-temperature if we also know the spacing and the speed or thermal inertia of the detector. The response of a fixed-temperature heat detector is given by its RTI.

12.6 Assumption and Limitations

The method discussed in this chapter is subject to several assumptions and limitations.

(1) The plume ceiling jet correlations of temperature and velocity assume that the fire source is located away from walls and corners. The primary impact of walls and corners is to reduce the amount of entrained air into the plume. This has the effect of lengthening flames and causing the temperature in a plume to be higher at a given elevation than it would be in the open.

(2) The correlations for estimating the maximum ceiling jet temperature and velocity were developed for steady-state fires and plumes under unconfined ceiling (where the smoke layer does not develop below the ceiling jet during the time of interest).

(3) The plume ceiling jet correlations are valid for unconfined flat ceilings, as the environments outside the ceiling jet are uniform in temperature and are atmospheric ambient. Caution should be exercised with this method when the ceiling has a irregular surface such as beam pockets.

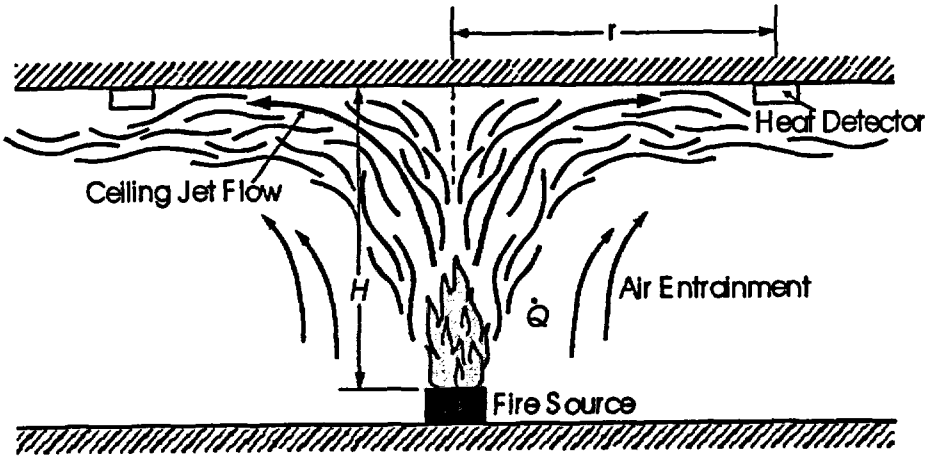

Figure 12-1 Ceiling Jet Flow Beneath and Unconfined Ceiling Showing a Heat Detector

(4) The correlations for estimating the maximum ceiling jet temperature and velocity were developed for steady-state fires and plumes under unconfined ceiling (where the smoke layer does not develop below the ceiling jet during the time of interest).

(5) The plume ceiling jet correlations are valid for unconfined ceilings, as the environments outside the ceiling jet are uniform in temperature and are atmospheric ambient.

(6) All calculations for determining time to operation only consider the convective heating of sensing elements by the hot fire gases. They do not explicitly account for any direct heating by radiation from the flames.

(7) Caution should be exercised with this method when the overhead area is highly obstructed.

(8) The detectors are located at or very near to the ceiling. Very near to the ceiling would include code compliant detectors mounted on the bottom flange of structural steel beams. These methods are not applicable to detectors mounted well below the ceiling in free air.

12.7 Required Input for Spreadsheet Calculations

The user must obtain the following information before using the spreadsheet:

(1) heat release rate of the fire (kW

(2) listed spacing of detectors (ft)

(3) activation temperature of detectors (°F)

(4) height to ceiling (ft)

(5) ambient room temperature (°F)

12.8 Cautions

(1) Use (Detector_Activation_Time.xls) and select "FTHDetector" spreadsheet on the CD-ROM for calculations.

(2) Make sure all inputs are recorded in the correct units.

12.9 Summary

This chapter discusses a methods of calculating the response time of heat detectors under unobstructed ceilings in response to steady-state fires without forced ventilation.

12.10 References

Budnick, E.K., D.D. Evans, and H.E. Nelson, "Simplified Fire Growth Calculations" Section 11, Chapter 10, *NFPA Fire Protection Handbook*, 18th Edition, A.E. Cote, Editor-in-Chief, National Fire Protection Association, Quincy, Massachusetts, 1997.

Heskestad, G., and H.F. Smith, "Investigation of a New Sprinkler Sensitivity Approval Test: The Plunge Test," FMRC Serial No. 22485, Factory Mutual Research Corporation, Norwood, Massachusetts, December 1976.

Heskestad, G., and M.A. Delichatsios, "Environments of Fire Detectors—Phase 1: Effects of Fire Size, Ceiling Height and Material," Measurements Volume I, NBS-GCR-77-86, Analysis Volume II, NBS-GCR-77-95, National Bureau of Standards, Washington, DC, 1977.

NFPA 72, National Fire Alarm Code®, 1999 Edition, Appendix B: Engineering Guide for Automatic Fire Detection Spacing, National Fire Protection Association, Quincy, Massachusetts.

12.11 Additional Readings

Alpert, R.L., "Calculation of Response Time of Ceiling-Mounted Fire Detectors," *Fire Technology*, Volume 8, pp. 181–195, 1972.

Alpert, R.L., and E.J. Ward, "Evaluation of Unsprinklered Fire Hazard," *Fire Safety Journal*, Volume 7, No. 177, 1984.

Bryan, J.L., *Fire Suppression and Detection Systems*, Macmillan Publishing Company, New York, 1993.

Evans, D.A., "Ceiling," Section 2, Chapter 4, *SFPE Handbook of Fire Protection Engineering*, 2nd Edition, P.J. DiNenno, Editor-in-Chief, National Fire Protection Association, Quincy, Massachusetts, 1995.

Moore, W.D., "Automatic Fire Detectors" Section 5, Chapter 2, *NFPA Fire Protection Handbook*, 18th Edition, A.E. Cote, Editor-in-Chief, National Fire Protection Association, Quincy, Massachusetts, 1997.

Schifiliti, R.P., B.J. Meacham, B. J., and R.P. Custer, "Design of Detection Systems," Section 4, Chapter 1, *SFPE Handbook of Fire Protection Engineering*, 2nd Edition, P.J. DiNenno, Editor-in-Chief, National Fire Protection Association, Quincy, Massachusetts, 1995.

12.12 Problems

Example Problem 12.12-1

Problem Statement

A 34.5 ft^2 (3.20 m^2) lube oil pool fire with $\dot{Q}$ = 5,750 kW occurs in a space protected with fixed-temperature heat detectors. Calculate the activation time for the fixed-temperature heat detectors, using 10 ft (3.05 m) spacing, in an area with a ceiling height of 10 ft (3.05 m). The detector activation temperature is 128 °F (53 °C), the radial distance to the detector is 4 ft (1.22 m), and the ambient temperature is 68 °F (20 °C).

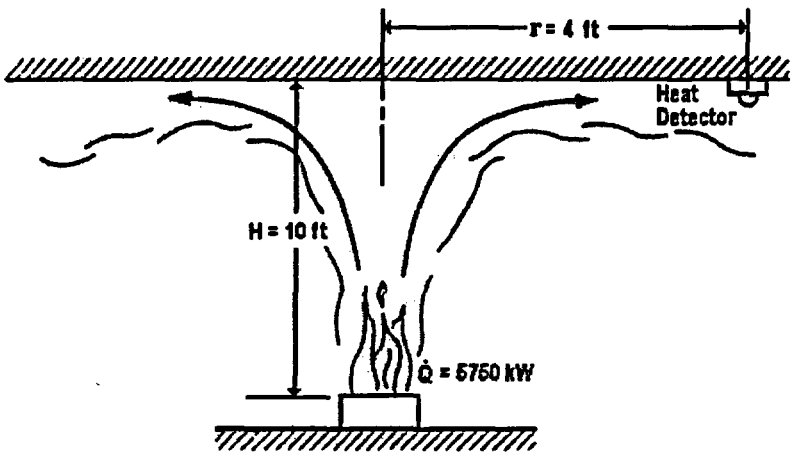

Example Problem 12-1: Fire Scenario with Heat Detectors

Solution

Purpose:

(1) Determine the response time of the fixed-temperature heat detectors for the fire scenario.

Assumptions:

(1) The fire is located away from walls and corners
(2) The fire is steady state and plume is under unconfined ceiling
(3) Only convective heat transfer from the hot fire gases is considered
(4) There is no heavily obstructed overhead

Spreadsheet (FDT^s) Information:

Use the following FDT^s:

(a) Detector_Activation_Time.xls (click on *FTHDetector*)

FDT^s Input Parameters:

-Heat Release Rate of the Fire ($\dot{Q}$) = 5,750 kW
-Radial Distance to the Detector (r) = 4 ft
-Activation Temperature of the Fixed Temperature Heat Detector ($T_{activation}$) = 128 °F
-Distance from the Top of the Fuel Package to the Ceiling (H) = 10 ft
-Ambient Air Temperature (T_a) = 68 °F
-Click on the option button (⊙) for FTH detectors with $T_{activation}$ = 128 °F
-Select Detector Spacing: 10

Results*

Detector Type	Heat Detector Activation Time ($t_{activation}$) (min.)
Fixed Temperature	10

*see spreadsheet on next page

Spreadsheet Calculations

CHAPTER 12 - METHOD OF ESTIMATING FIXED TEMPERATURE HEAT DETECTOR

The following calculations estimate fixed temperature heat detector a activation time.
Parameters should be specified ONLY IN THE YELLOW INPUT PARAMETER BOXES.
All subsequent output values are calculated by the spreadsheet and based on values specified in the input parameters. This spreadsheet is protected and secure to avoid errors due to a wrong entry in a cell(s).
The chapter in the guide should be read before an analysis is made.

INPUT PARAMETERS

Heat Release Rate of the Fire (Q)	5750.00	kW	
Radial Distance to the Detector **never more than 1/2 of the listed spacing**	4.00	ft	1.22 m
Activation Temperature of the Fixed Temperature Heat Detector ($T_{activation}$)	128	°F	53.33 °C
Detector Response Time Index (RTI)	490.00	$(m\text{-}sec)^{1/2}$	
Distance from the Top of the Fuel Package to the Ceiling (H)	10.00	ft	3.05 m
Ambient Air Temperature (T_a)	68.00	°F	20.00 °C
			293.00 K
Convective Heat Release Fraction (χ_c)	0.70		
r/H = 0.40			

INPUT DATA FOR ESTIMATING HEAT DETECTOR RESPONSE TIME

Activation Temperature $T_{activation}$

T= 128 F

UL Listed Spacing r (ft)	Response Time Index RTI $(m/sec)^{1/2}$	Activation Temperature (°F)
10	490	128
15	306	128
20	325	128
25	152	128
30	116	128
40	87	128
50	72	128
70	44	128

Select Detector Spacing

10

Scroll to desired spacing then Click on selection

T= 135 F

UL Listed Spacing r (ft)	Response Time Index RTI $(m/sec)^{1/2}$	Activation Temperature (°F)
10	404	135
15	233	135
20	165	135
25	123	135
30	98	135
40	70	135
50	54	135
70	29	135

Select Detector Spacing

Scroll to desired spacing then Click on selection

T= 145 F

UL Listed Spacing r (ft)	Response Time Index RTI $(m/sec)^{1/2}$	Activation Temperature (°F)
10	321	145
15	191	145
20	129	145
25	96	145
30	75	145
40	50	145
50	37	145
70	11	145

Select Detector Spacing

Scroll to desired spacing then Click on selection

DT= 160 F

UL Listed Spacing r (ft)	Response Time Index RTI (m/sec)$^{1/2}$	Activation Temperature (°F)
10	239	160
15	135	160
20	88	160
25	59	160
30	44	160
40	22	160

Select Detector Spacing

Scroll to desired spacing then click on selection

DT= 170 F

UL Listed Spacing r (ft)	Response Time Index RTI (m/sec)$^{1/2}$	Activation Temperature (°F)
10	196	170
15	109	170
20	64	170
25	39	170
30	27	170

Select Detector Spacing

Scroll to desired spacing then click on selection

DT= 196 F

UL Listed Spacing r (ft)	Response Time Index RTI (m/sec)$^{1/2}$	Activation Temperature (°F)
10	119	196
15	55	196
20	21	196

Select Detector Spacing

Scroll to desired spacing then click on selection

Reference: NFPA Standard 72, National Fire Alarm Code, Appendix B, Table B-3.2.5.1, 1999, Edition.

ESTIMATING FIXED TEMPERATURE HEAT DETECTOR RESPONSE TIME

Reference: *NFPA Fire Protection Handbook*, 18th Edition, 1997, Page 11-97.

$t_{activation} = (RTI/(vu_{jet}))\ (\ln (T_{jet} - T_a)/(T_{jet} - T_{activation}))$

Where
$t_{activation}$ = detector activation time (sec)
RTI = detector Response Time Index (m-sec)$^{1/2}$
u_{jet} = ceiling jet velocity (m/sec)
T_{jet} = ceiling jet temperature (°C)
T_a = ambient air temperature (°C)
$T_{activation}$ = activation temperature of detector (°C)

Ceiling Jet Temperature Calculation

$T_{jet} - T_a = 16.9\ (Q_c)^{2/3}/H^{5/3}$ for r/H = 0.18

$T_{jet} - T_a = 5.38\ (Q_c/r)^{2/3}/H$ for r/H > 0.18

Where
T_{jet} = ceiling jet temperature (°C)
T_a = ambient air temperature (°C)
Q_c = convective portion of the heat release rate (kW)
H = distance from the top of the fuel package to the ceiling level (m)
r = radial distance from the plume centerline to the detector (m)

Convective Heat Release Rate Calculation

$Q_c = \chi_c Q$

Where
Q = heat release rate of the fire (kW)
χ_c = convective heat release fraction

Q_c = 4025 kW

Radial Distance to Ceiling Height Ratio Calculation

r/H = 0.40 r/H > 0.15

>0.15	391.35	<0.15	667.3787231

$T_{jet} - T_a$ = 5.38 ((Qc/r)^2/3)/H

$T_{jet} - T_a$ = 391.35

T_{jet} = 411.35 (°C)

Ceiling Jet Velocity Calculation

$u_{jet} = 0.96\ (Q/H)^{1/3}$ for r/H = 0.15

$u_{jet} = (0.195\ Q^{1/3}\ H^{1/2})/r^{5/6}$ for r/H > 0.15

u_{jet} = ceiling jet velocity (m/sec)
Q = heat release rate of the fire (kW)
H = distance from the top of the fuel package to the ceiling (m)
r = radial distance from the plume centerline to the detector (m)

Radial Distance to Ceiling Height Ratio Calculation

r/H = 0.40 r/H > 0.15

u_{jet} = (0.195 Q^1/3 H^1/2)/r^(5/6)

u_{jet} = 5.171 m/sec

Detector Activation Time Calculation

$t_{activation}$ =(RTI/(vu_{jet})) (ln (T_{jet} - T_a)/(T_{jet} - $T_{activation}$))

$t_{activation}$ = 19.18 sec

The detector will respond in approximately 0.32 minutes **ANSWER**

NOTE: If $t_{activation}$ = "NUM" Detector does not activate

NOTE

The above calculations are based on principles developed in the NFPA Fire Protection Handbook 18th Edition, 1997. Calculations are based on certain assumptions and have inherent limitations.
The results of such calculations may or may not have reasonable predictive capabilities for a given situation, and should only be interpreted by an informed user.
Although each calculation in the spreadsheet has been verified with the results of hand calculation, there is no absolute guarantee of the accuracy of these calculations.
Any questions, comments, concerns, and suggestions, or to report an error(s) in the spreadsheet, please send an email to nxi@nrc.gov.

NRR

Office of Nuclear Reactor Regulation

Example Problem 12.12-2

Problem Statement

A trash fire with $\dot{Q}$ = 1,000 kW occurs in a space protected with fixed-temperature heat detectors. Calculate the activation time for the fixed-temperature heat detectors, using 10 ft (3.05 m) spacing, in an area with a ceiling height of 8 ft (2.43 m). The fire is located directly between heat detectors. The detector activation temperature is 160 °F (71 °C), and the ambient temperature is 68 °F (20 °C).

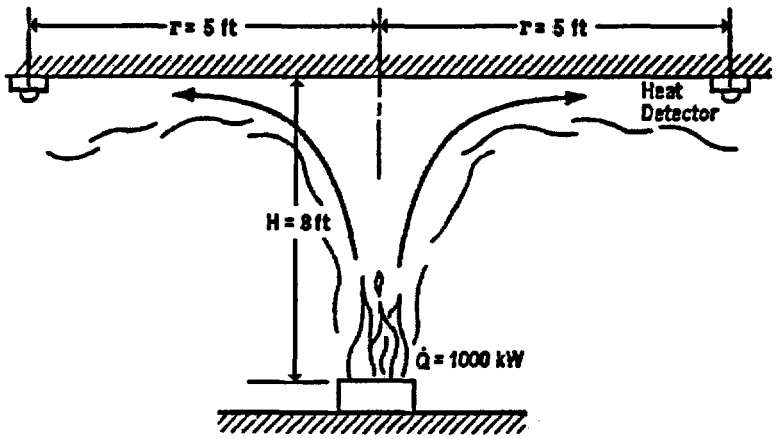

Example Problem 12-2: Fire Scenario with heat detectors that are equidistant from the fire source

Solution

Purpose:

(1) Determine the response time of the fixed-temperature heat detectors for the fire scenario.

Assumptions:

(1) The fire is located away from walls and corners
(2) The fire is steady state and plume is under unconfined ceiling
(3) Only convective heat transfer from the hot fire gases is considered
(4) There is no heavily obstructed overhead

Spreadsheet (FDT^s) Information:

Use the following FDT^s:

(a) Detector_Activation_Time.xls (click on *FTHDetector*)

FDT^s Input Parameters:

-Heat Release Rate of the Fire $(\dot{Q})$ = 1,000 kW
-Radial Distance to the Detector (r) = 5 ft
-Activation Temperature of the Fixed Temperature Heat Detector ($T_{activation}$) = 160 °F
-Distance from the Top of the Fuel Package to the Ceiling (H) = 8 ft
-Ambient Air Temperature (T_a) = 68 °F
-Click on the option button (⊙) for FTH detectors with $T_{activation}$ = 160 °F
-Select Detector Spacing: **10**

Results*

Detector Type	Heat Detector Activation Time ($t_{activation}$) (min.)
Fixed Temperature	1.5

*see spreadsheet on next page

Spreadsheet Calculations

CHAPTER 12 - METHOD OF ESTIMATING FIXED TEMPERATURE HEAT DETECTOR

The following calculations estimate fixed temperature heat detector a activation time.
Parameters should be specified ONLY IN THE YELLOW INPUT PARAMETER BOXES.
All subsequent output values are calculated by the spreadsheet and based on values specified in the input parameters. *This spreadsheet is protected and secure to avoid errors due to a wrong entry in a cell(s).*
The chapter in the guide should be read before an analysis is made.

INPUT PARAMETERS

Heat Release Rate of the Fire (Q)	1000.00	kW	
Radial Distance to the Detector **never more than 1/2 of the listed spacing**	5.00	ft	1.52 m
Activation Temperature of the Fixed Temperature Heat Detector ($T_{activation}$)	160	°F	71.11 °C
Detector Response Time Index (RTI)	239.00	$(m\text{-}sec)^{1/2}$	
Distance from the Top of the Fuel Package to the Ceiling (H)	8.00	ft	2.44 m
Ambient Air Temperature (T_a)	68.00	°F	20.00 °C
			293.00 K
Convective Heat Release Fraction (χ_c)	0.70		
r/H = 0.63			

INPUT DATA FOR ESTIMATING HEAT DETECTOR RESPONSE TIME

Activation Temperature $T_{activation}$

T= 128 F

UL Listed Spacing r (ft)	Response Time Index RTI $(m/sec)^{1/2}$	Activation Temperature (°F)
10	490	128
15	306	128
20	325	128
25	152	128
30	116	128
40	87	128
50	72	128
70	44	128

Select Detector Spacing

Scroll to desired spacing then Click on selection

T= 135 F

UL Listed Spacing r (ft)	Response Time Index RTI $(m/sec)^{1/2}$	Activation Temperature (°F)
10	404	135
15	233	135
20	165	135
25	123	135
30	98	135
40	70	135
50	54	135
70	29	135

Select Detector Spacing

Scroll to desired spacing then Click on selection

T= 145 F

UL Listed Spacing r (ft)	Response Time Index RTI $(m/sec)^{1/2}$	Activation Temperature (°F)
10	321	145
15	191	145
20	129	145
25	96	145
30	75	145
40	50	145
50	37	145
70	11	145

Select Detector Spacing

Scroll to desired spacing then Click on selection

T= 160 F

UL Listed Spacing r (ft)	Response Time Index RTI (m/sec)$^{1/2}$	Activation Temperature (°F)
10	239	160
15	135	160
20	86	160
25	59	160
30	44	160
40	22	160

Select Detector Spacing

10

Scroll to desired spacing then Click on selection

T= 170 F

UL Listed Spacing r (ft)	Response Time Index RTI (m/sec)$^{1/2}$	Activation Temperature (°F)
10	196	170
15	109	170
20	64	170
25	39	170
30	27	170

Select Detector Spacing

Scroll to desired spacing then Click on selection

T= 196 F

UL Listed Spacing r (ft)	Response Time Index RTI (m/sec)$^{1/2}$	Activation Temperature (°F)
10	119	196
15	55	196
20	21	196

Select Detector Spacing

Scroll to desired spacing then Click on selection

Reference: NFPA Standard 72, National Fire Alarm Code, Appendix B, Table B-3.2.5.1, 1999, Edition.

ESTIMATING FIXED TEMPERATURE HEAT DETECTOR RESPONSE TIME

Reference: *NFPA Fire Protection Handbook*, 18th Edition, 1997, Page 11-97.

$t_{activation} = (RTI/(vu_{jet})) (\ln (T_{jet} - T_a)/(T_{jet} - T_{activation}))$

Where $t_{activation}$ = detector activation time (sec)
RTI = detector Response Time Index (m-sec)$^{1/2}$
u_{jet} = ceiling jet velocity (m/sec)
T_{jet} = ceiling jet temperature (°C)
T_a = ambient air temperature (°C)
$T_{activation}$ = activation temperature of detector (°C)

Ceiling Jet Temperature Calculation

$T_{jet} - T_a = 16.9 (Q_c)^{2/3}/H^{5/3}$ for r/H = 0.18

$T_{jet} - T_a = 5.38 (Q_c/r)^{2/3}/H$ for r/H > 0.18

Where T_{jet} = ceiling jet temperature (°C)
T_a = ambient air temperature (°C)
Q_c = convective portion of the heat release rate (kW)
H = distance from the top of the fuel package to the ceiling level (m)
r = radial distance from the plume centerline to the detector (m)

Convective Heat Release Rate Calculation

$Q_c = \chi_c Q$

Where Q = heat release rate of the fire (kW)
χ_c = convective heat release fraction

Q_c = 700 kW

Radial Distance to Ceiling Height Ratio Calculation

r/H = 0.63 r/H > 0.15

>0.15	131.35	<0.15	301.6086656

$T_{jet} - T_a$ = 5.38 ((Qc/r)^2/3)/H

$T_{jet} - T_a$ = 131.35

T_{jet} = 151.35 (°C)

Ceiling Jet Velocity Calculation

$u_{jet} = 0.96\ (Q/H)^{1/3}$ for r/H = 0.15

$u_{jet} = (0.195\ Q^{1/3}\ H^{1/2})/r^{5/6}$ for r/H > 0.15

u_{jet} = ceiling jet velocity (m/sec)
Q = heat release rate of the fire (kW)
H = distance from the top of the fuel package to the ceiling (m)
r = radial distance from the plume centerline to the detector (m)

Radial Distance to Ceiling Height Ratio Calculation

r/H = 0.63 r/H > 0.15

u_{jet} = (0.195 Q^1/3 H^1/2)/r^(5/6)

u_{jet} = 2.143 m/sec

Detector Activation Time Calculation

$t_{activation}$ =(RTI/(vu_{jet})) (ln ($T_{jet} - T_a$)/($T_{jet} - T_{activation}$))

$t_{activation}$ = 80.46 sec

The detector will respond in approximately 1.34 minutes ANSWER

NOTE: If $t_{activation}$ = "NUM" Detector does not activate

NOTE

The above calculations are based on principles developed in the NFPA Fire Protection Handbook 18th Edition, 1997. Calculations are based on certain assumptions and have inherent limitations.
The results of such calculations may or may not have reasonable predictive capabilities for a given situation, and should only be interpreted by an informed user.
Although each calculation in the spreadsheet has been verified with the results of hand calculation, there is no absolute guarantee of the accuracy of these calculations.
Any questions, comments, concerns, and suggestions, or to report an error(s) in the spreadsheet, please send an email to nxi@nrc.gov.

NRR

Office of Nuclear Reactor Regulation

CHAPTER 13. PREDICTING COMPARTMENT FLASHOVER

13.1 Objectives

This chapter has the following objectives:

- Explain what an incipient period of a fire is.
- Characterize flashover and its stages.
- Describe how to predict the HRR required for flashover and post-flashover temperature in a compartment.

13.2 Introduction

Following ignition, a compartment fire experiences a slow growth period, which is often refered to as the "incipient period." During this period, all of the measurable fire parameters (heat release rate (HRR), rate of fuel or oxygen consumption, and temperature of the compartment gases) are low and increase at a low rate.

After the incipient period, the fire begins to grow more rapidly, as in the parabolic fire growth curves described by the t^2 fires (see Appendix B for details). The HRR and rate of fuel/oxygen consumption also increase rapidly. This acceleration, in turn, also increases the compartment gas temperature. In addition, in an adequately ventilated compartment, the rate of air entering the compartment also increases. At some point in the history of a given fire, the rate of fire growth increases so rapidly that all combustibles in the compartment reach their ignition temperature and become involved in the combustion process and "flashover" is achieved. Figure 13-1 illustrates of the post-flashover compartment fire in which the fire is assumed to be volumetric rather than point source.

At the high temperatures that occur in the gas layer of a post-flashover fire, significant radiative heat transfer occurs from the carbon dioxide gas, water vapor, and soot particles in the smoke. The gas layer and flames radiate to the floor, walls and ceiling, back to the fire and fuel sources, to any other objects that may be present in the compartment, and out through any openings in the enclosure. In addition, the heated walls, ceiling, and other heated objects are re-radiating heat back within the enclosure.

Often, a post-flashover fire may have significant fuel to continue burning, but the air entering the room may be limited. The fire, which might otherwise continue to grow if it were burning in unconfined space, enters a period where it is said to be "ventilation controlled," meaning that the fire ceases to grow because of a lack of oxygen. The rates of fuel consumption and heat release stall, and the compartment temperature ceases to climb as rapidly it did before flashover. These parameters may then begin to decrease slightly as a result of the less-than-stoichiometric air-fuel mixture. The fire may continue to decay until the air supply ratio become stoichiometric or greater, thereby allowing further fire growth. At this point, the fire may become "fuel controlled," meaning the amount of available fuel (rather than the available air supply) governs the rate of burning. The fire may again grow to a ventilation controlled condition and continue in a transient state alternate between ventilation and fuel control throughout the remaining active burning period of the fire. It is during this post-flashover period that the fire barrier system must function at its highest efficiency

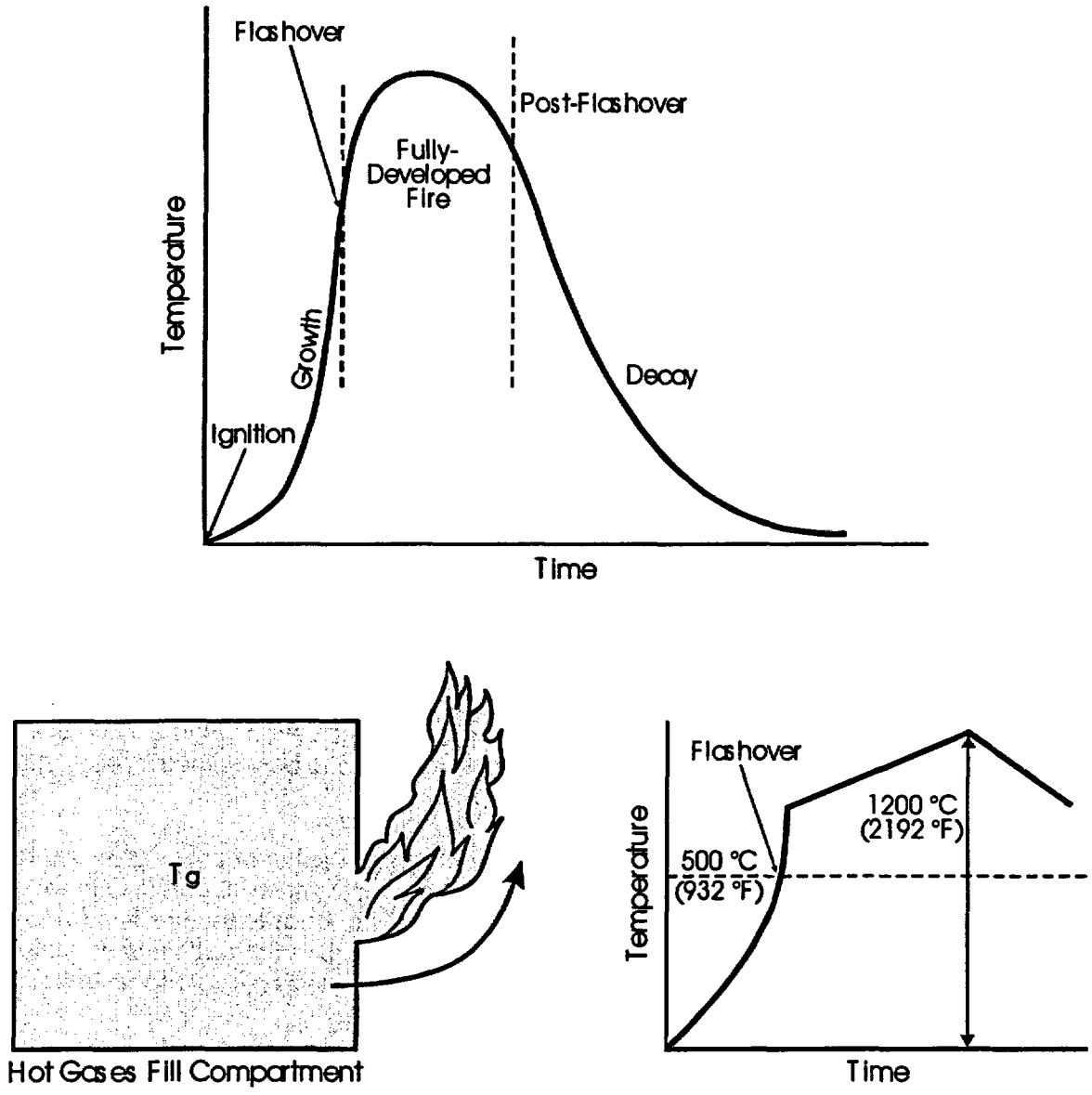

Figure 13-1 Flashover and Postflashover Compartment Fire

to contain the fire. Eventually, the fire will enter its final fuel-controlled state as the fuel is totally consumed and the fire decays to extinction.

Several physical processes may be described in order to characterize the event that is frequently referred to as flashover. Fire fighters generally recognize flashover as the condition characterized by emission of flames through the open doorway of a fire compartment. It is the transition from the fire growth period to the fully developed stage in the development of a compartment fire that is stages demarcates pre-flashover and post-flashover. Flashover is the phenomenon that defines the point of time at which all combustibles in the compartment are involved in the fire and flames appear to fill the entire volume. Gas temperatures of 300 to 650 °C (572 to 1,202 °F) have been associated with the onset of flashover, although temperatures of 500 to 600 °C (932 to 1,112 °F) are more widely accepted.

The formal definition of flashover, as given by the International Standards Organization (ISO) "Glossary of Fire Terms and Definitions," (ISO/CD 13943) is, "the rapid transition to a state of total surface involvement in a fire of combustion material within an enclosure". Flashover is the term given to the relatively abrupt change from a localized fire to the complete involvement of all combustibles within a compartment.

Flashover is principally described by four stages. The hot buoyant plume develops during the first stage following ignition, and then reaches the ceiling and spreads as a ceiling jet (second stage). During the third and fourth stages, the hot layer expands and deepens, and flow through the opening is established.

When a fire in a compartment is allowed to grow without intervention, temperatures in the hot upper layer increase, thereby increasing radiant heat flux to all objects in the room. If a critical level of heat flux is reached, all exposed combustible items in the room will begin to ignite and burn, leading to a rapid increase in both heat release rate and temperatures. This transition is called "flashover". The fire is then referred to as "post-flashover fire," a "fully developed fire," or a fire that has reached "full room involvement".

The above descriptions of flashover are somewhat general. In order to more clearly define the specific point at which flashover occurs, we must use some definite physical characteristics:

(1) Flashover is the time at which the temperature rise in the hot gas reaches 500 °C (932 °F). [600 °C (1112 °F) is sometimes used to define flashover].

(2) Flashover is the time at which the radiant heat flux density at the floor of the compartment reaches a minimum value of 20 kW/m^2 throughout.

(3) Flashover may be defined in terms of the rate of heat release ($\dot{Q}_{FO}$) from the fire in comparison to the total area of the compartment enclosing surfaces (A_T), the area of any ventilation openings (A_v), and the height of any ventilation openings (H_v), is illustrated by the following expression:

$$\dot{Q}_{FO} \propto \sqrt{A_T A_v \sqrt{H_v}} \qquad (13\text{-}1)$$

The first definition, in terms of temperature of the ceiling layer, is based upon experimental observation. Some compartment fire tests, define the flashover point as the time at which flames just begin to emerge through openings in the compartment. Examination of the empirical data from testing has shown that the flame emergence point generally corresponds to a ceiling layer temperature of about 500 °C to 600 °F (932 °F to 1,112 °F).

The second definition of flashover is given in terms of heat flux at the floor of the compartment. In essence, this definition describes the heat flux that would be necessary to establish simultaneous ignition of most ordinary combustibles throughout the enclosure. A radiant heat flux density of 20 kW/m^2 is sufficient for piloted ignition of most ordinary combustibles. In most cases, a ceiling layer at 500 °C (932 °F) will radiate to the floor at a minimum rate of 20 kW/m^2 in a typical compartment.

The third definition, which correlates HRR and compartment geometries, is more descriptive and more useful for predicting the physical conditions that might be necessary to establish either of the criteria required by the first two definitions. While researchers use different definitions for the onset of flashover, they reach some level of agreement on the temperature and heat flux necessary for the onset of flashover

Hägglund, Jannson, and Onnermark (1974) experimentally observed flames exiting the doorway when the gas temperature about 10 mm (0.40 in) below the ceiling reached 600 °C (1,112 °F). Babrauskas (1977) applied this criterion to a series of 10 full-scale mattress fires only 2 exhibited a potential to flashover the test compartment. These two mattress fires led to maximum gas temperatures well in excess of 600 °C (1,112 °F), with flashover observed near that temperature. Fang (1975) reported experiments conducted in a full-scale compartment at the National Bureau of Standards (NBS) now the National Institute of Standards and Technology (NIST). An average upper room temperature ranging from 450 to 650 °C (842 to 1,202 °F) provided sufficient a level of radiation transfer to result in the ignition of crumpled newspaper indicators at floor level in the compartment. The average upper room gas temperature necessary for spontaneous ignition of newsprint was 540 ± 40 °C (1,004 ± 104 °F). It should be noted that this average included low temperatures at the mid-height of the compartment, and that temperatures measured 25 mm (1 in) below the ceiling in this test series usually exceeded 600 °C (1,112 °F).

Fang (1975) also found that strips of newspaper placed at floor level in room burn tests ignited by fluxes of 17 to 25 kW/m^2, while 6.4 mm (1/4 in.) thick fir plywood ignited at 21 to 33 kW/m^2. Lee and Breese (1979) reported average heat fluxes at floor level of 17 to 30 kW/m^2 at flashover for full-scale tests of submarine compartments.

The NFPA 555 "Guide on Methods for Evaluating Potential for Room Flashover," (NFPA 555) define as room flashover in terms of temperature rise and heat flux at floor level. According to the NFPA guide, a gas temperature rise at flashover of 600 °C (1,112 °F) is a reasonable expectation, as is heat flux 20 kW/m^2 at floor level at flashover.

13.3 Compartment Flashover

Researchers have extensively studied the minimum HRR needed to cause flashover in a compartment. The studies suggest that minimum rate increases with the size of the compartment and depends, in a complicated way, on the ventilation in the compartment. If there is too little ventilation, flashover cannot occur. If there is an excessive amount of ventilation, the excess air flow dilutes and cools the smoke, so a larger HRR is needed to reach the critical temperature condition for flashover. The construction materials and thickness of the ceiling and upper walls are also important factors in determining whether flashover will occur. These factors also determine the time required for flashover in a compartment that does reach the critical temperature.

Researchers have used several approaches to estimate the onset of flashover within a compartment. These approaches are typically based on simplified mass and energy balances in a single-compartment fire along with correlations to fire experiments.

Visually, researchers report flashover as a discrete event in full-scale fire tests and actual fire incidents. Numerous variables can affect the transition of a compartment fire to flashover. Thermal influences are clearly important where radiative and convective heat flux are assumed to be driving forces. Ventilation conditions, compartment volume, and chemistry of the hot gas layer can also influence the occurrence of flashover. Rapid transition to flashover adds to the uncertainty of attempts to quantify the onset of flashover with laboratory measurements.

Although the flashover process is not easy to quantify in terms of measurable physical parameters, a working definition can be formulated from the considerable body of flashover-related full-scale fire test data accumulated from a variety of sources.

13.3.1 Method of Predicting Compartment Flashover HRR

The occurrence of flashover within a compartment is the ultimate signal of untenable conditions within the compartment of fire origin as well as a sign of greatly increased risk to other compartments within the building. A number of experimental studies of full-scale fire have been performed provide simple correlations to predict HRR required for flashover.

13.3.1.1 Method of McCaffrey, Quintiere, and Harkleroad (MQH)

McCaffrey, Quintiere, and Harkleroad (1981) found that their data for predicting compartment hot gas temperature may extend to predict the HRR required to result in flashover in the compartment and obtained the following expression:

$$\dot{Q}_{FO} = 610 \sqrt{h_k A_T A_v \sqrt{h_v}} \qquad (13\text{-}2)$$

Where:

$\dot{Q}_{FO}$ = heat release rate to cause flashover (kW)
h_k = effective heat transfer coefficient (kW/m^2-K)
A_T = total area of the compartment enclosing surfaces (m^2), excluding area of vent opening
A_v = area of the ventilation openings (m^2)
h_v = height of the ventilation openings (m)

13.3.1.2 Method of Babrauskas

Babrauskas (1980) developed a simplified relationship that represent values correlated to experiments produce flashover. Based on the 33 compartment fire tests with HRR range from 11 to 3,840 kW with fuels primarily of wood and polyurethane, Babrauskas found that the HRR required to cause flashover is describe by the following relation:

$$\dot{Q}_{FO} = 750 \ A_v \sqrt{h_v} \qquad (13\text{-}3)$$

Where:

$\dot{Q}_{FO}$ = heat release rate to cause flashover (kW)
A_v = area of the ventilation openings (m^2)
h_v = height of the ventilation openings (m)

Equation 13-3 is an extremely simply and easy to use relation, though it does not take into account the area and thermal properties of compartment enclosing surfaces.

13.3.1.3 Method of Thomas

Thomas (1981) (also reported by Walton and Thomas, 1995) developed a semi-empirical calculation of the HRR required to cause flashover in a compartment. He presented a simple model of flashover in a compartment, which he used to study the influence of wall-lining materials and thermal feedback to the burning items. He predicted a temperature rise of 520 °C (968 °F) and a black body radiation level of 22 kW/m^2 to an ambient surface away from the neighborhood of burning wood fuel at the predicted critical heat release rate necessary to cause flashover.

Thomas' flashover is the result of simplifications applied to an energy balance of a compartment fire. The resulting correlation yields the minimum HRR for flashover:

$$\dot{Q}_{FO} = 7.8A_T + 378A_v\sqrt{h_v} \qquad (13\text{-}4)$$

Where:

$\dot{Q}_{FO}$ = heat release rate to cause flashover (kW)
A_T = total area of the compartment enclosing surfaces (m^2), excluding area of vent opening
A_v = area of the ventilation openings (m^2)
h_v = height of the ventilation openings (m)

The constants in Equation 13-4 represent values derived from experiments producing flashover.

This correlation assumes that conduction has become stationary. The thermal penetration time is long for compartments with thick concrete walls, and it is unlikely that a fire slowly and gradually grows up to $\dot{Q}_{FO}$ in a number of hours. A reasonable time frame for estimating the likelihood of flashover is in the range of a few minutes up to around 30 minutes. We note that firefighter reaction time is usually also within this range (Karlsson and Quintiere, 1999).

13.3.2 Method of Predicting Compartment Post-Flashover Temperature

After flashover has occurred, the exposed surfaces of all combustibles items in the compartment will be burning and the HRR will developed to a maximum, producing high temperatures (see Figure 13-1). Typically, this may be as high as 1,100 °C (2,012 °F), but much higher temperatures can be obtained under certain conditions[1] (Drysdale, 1998). These will be maintained until the rate of generation of flammable volatile begins to decrease as a result of fuel consumption. It is during the period of the fully-developed fire that building elements may reach temperatures at which they may fail.

Thomas (1974) developed an approach to estimate peak compartment temperature based on post-flashover enclosure fire data. Law (1978) extended this approach to include both natural and forced ventilation through the evaluation of extensive pre-flashover compartment fire test data. The results indicate that the predictions reasonably, but not exactly, predict the temperatures reported in the test fires.

Drawing on data gathered in the Conseil Internationale du Batiment (CIB) Research Program of fully developed compartment fires (Thomas 1974),(Law 1978) found following correlation to predict post-flashover compartment temperature with natural ventilation:

$$T_{FO(max)} = 6000 \frac{\left(1 - e^{-0.1\Omega}\right)}{\sqrt{\Omega}} \qquad (13\text{-}5)$$

$$\Omega = \frac{A_T - A_v}{A_v \sqrt{h_v}} \qquad (13\text{-}6)$$

Where:

$\dot{Q}_{FO}$ = heat release rate to cause flashover (kW)

Ω = ventilation factor

A_T = total area of the compartment enclosing surfaces (m^2), excluding area of vent opening

A_v = area of the ventilation openings (m^2)

h_v = height of the ventilation openings (m)

Equation 13-5 does not consider variations in the thermophysical properties of compartment enclosing surfaces.

---

[1]Temperatures in excess of 1300–1400 °C (2,372–2,552 °F), sufficient to cause the surface of bricks to fuse (melt), are occasionally encountered. For example, the Summit Rail Tunnel Fire (Department of Transport, 1984) produced sufficiently high temperatures to cause the faces of brick-lined ventilation shafts to fuse.

13.4 Assumptions and Limitations

The methods discussed in this chapter are subject to several assumptions and limitations.

(1) The correlation was developed from a simplified mass and energy balance on a single compartment with ventilation openings.

(2) The experimental data used to develop the correlation included compartments with thermally thick walls and fires of wood cribs. Typically, heat transfer through compartment surfaces is accounted for with a semi-infinite solid approximation.

13.5 Required Input for Spreadsheet Calculations

The user must obtain the following information before using the spreadsheet:

(1) compartment width (ft)

(2) compartment length (ft)

(3) compartment height (ft)

(4) vent width (ft)

(5) vent height (ft)

13.6 Cautions

(1) Use (Compartment_ Flashover_Calculations.xls) spreadsheet in the CD-ROM for calculations.

(2) Make sure input parameters are recorded in the correct units.

13.7 Summary

Determination of temperatures associated with compartment fires provides a means of assessing the likelihood of the occurrence of flashover. Danger of flashover is assumed to occur if the analysis indicates a smoke layer temperature in excess of 450 °C (842 °F). Typically flashover occurs when the smoke layer temperature reaches between 500 °C (932 °F) and 600 °F (1,112 °F). Hot smoke layers are considered to be close to black body radiators. At 450 °C (842 °F) the radiation from the smoke would be approximately 15 kW/m^2 (1.32 Btu/ft^2-sec). Temperatures above the 450 °C (842 °F) level generate a higher incident heat flux on the burning fuel in a compartment than if the fire were in the open.

13.8 References

Babrauskas, V., "Combustion of Mattresses Exposed to Flaming Ignition Sources," Part I, Full-scale Tests and Hazard Analysis, NBSIR-1290, National Bureau of Standards (NBS), Washington, DC, 1977.

Babrauskas, V., "Estimating Room Flashover Potential," *Fire Technology*, Volume 16, No. 2, pp. 95–103, May 1980.

Department of Transport, "Report on the Derailment and Fire that Occurred on 20th December 1984 at Summit Tunnel in the London Midland Region of British Railways," Her Majesty's Stationery Office (HMSO) London, 1984.

Drysdale, D.D., Chapter 10, "The Post-Flashover Compartment Fire," *An Introduction to Fire Dynamics*, 2nd Edition, John Wiley and Sons, New York, pp. 146–149, 1998.

Fang, J.B., "Fire Buildup in a Room and the Role of Interior Finish Materials," Technical Report 879, National Bureau of Standards (NBS), Washington, DC, 1975.

Hägglund, B., R. Jannson, and B. Onnermark, "Fire Development in Residential Rooms After Ignition from Nuclear Explosion," FAO C20016-DG (A3), Forsvarets, Forskningsanstalt, Stockholm, 1974.

ISO/CD 13943, "Glossary of Fire Terms and Definitions," International Standards Organization, Geneva, 1996.

Karlsson, B., and J.G. Quintiere, *Enclosure Fire Dynamics,* Chapter 6, "Gas Temperature in Ventilated Enclosure Fires," CRC Press LLC, New York, pp. 115–140, 1999.

Law, M., "Fire Safety of External Building Elements—The Design Approach," *AISC Engineering Journal*, Second Quarter, American Institute of Steel Construction (AISC), 1978.

Lee, B. T., and J.N. Breese, "Submarine Compartment Fire Study - Fire Performance Evaluation of Hull Insulation," NBSIR-78-1584, National Bureau of Standards (NBS), Washington, DC, 1979.

McCaffrey, B.J., J.G. Quintiere, and M.F. Harkleroad, "Estimating Room Temperature and Likelihood of Flashover Using Fire Test Data Correlation," *Fire Technology*, Volume 17, No. 2, pp. 98–119, 1981.

NFPA 555, "Guide on Methods for Evaluating Potential for Room Flashover," 2000 Edition, National Fire Protection Association, Quincy, Massachusetts.

Thomas, P.H., "Testing Products and Materials for their Contribution to Flashover in Rooms," *Fire and Materials*, Volume 5, Number 3, pp. 130–111, September 1981.

Thomas, P.H., "Fire in Model Rooms, Conseil Internationale du Batiment (CIB) Research Program, Building Research Establishment, Borehamwood, Hertfordshire, England, 1974.

Walton, W.D., and P.H. Thomas, "Estimating Temperatures in Compartment Fires," Section 3, Chapter 3-6, *SFPE Handbook of Fire Protection Engineering*, 2nd Edition, P.J. DiNenno, Editor-in-Chief, National Fire Protection Association, Quincy, Massachusetts, 1995.

13.9 Problems

Example Problem 13.9-1

Problem Statement
Consider a compartment 20 ft width x 25 ft long x 12 ft high (w_c x l_c x h_c), with an opening 3 ft wide and 8 ft high (w_v x h_v). The interior lining material of the compartment is 6 in. concrete. Calculate the HRR necessary for flashover $\dot{Q}_{FO}$, and the post-flashover compartment temperature T_{PFO}.

Solution

Purpose:
(1) Determine the heat release rate for flashover for the given compartment.

Assumptions:
(1) Natural Ventilation

Spreadsheet (FDT^s) Information:
Use the following FDT^s:

(a) Compartment_Flashover_Calculations.xls
(click on *Flashover-HRR* to calculate the HRR for flashover)
(click on *Post_Flashover_Temperature* to calculate the post-flashover temperature)

FDT^s Input Parameters:
-Compartment Width (w_c) = 20 ft
-Compartment Length (l_c) = 25 ft
-Compartment Height (h_c) = 12 ft
-Vent Width (w_v) = 3 ft
-Vent Height (h_v) = 8 ft
-Interior Lining Thickness (δ) = 6 in. (*Flashover-HRR only*)
-Select Material: **Concrete** (*Flashover-HRR only*)

Results*

Post-Flashover Compartment Temperature (T_{PFO}) °C (°F)	HRR for Flashover ($\dot{Q}_{FO}$) (kW)		
Method of Law	Method of MQH	Method of Brabauskas	Method of Thomas
815 (1,500)	1,612	2,611	2,806

*see spreadsheet on next page

Spreadsheet Calculations

CHAPTER 13 - METHOD OF PREDICTING COMPARTMENT FLASHOVER

The following calculations estimate the minimum heat release rate required to compartment flashover. **Parameters should be specified ONLY IN THE YELLOW INPUT PARAMETER BOXES.** All subsequent output values are calculated by the spreadsheet and based on values specified in the input parameters. This spreadsheet is protected and secure to avoid errors due to a wrong entry in a cell(s). The chapter in the guide should be read before an analysis is made.

INPUT PARAMETERS

COMPARTMENT INFORMATION

Compartment Width (w_c)	20.00	ft	6.096 m
Compartment Length (l_c)	15.00	ft	4.57 m
Compartment Height (h_c)	12.00	ft	3.6576 m
Vent Width (w_v)	4.00	ft	1.219 m
Vent Height (h_v)	7.00	ft	2.13 m
Interior Lining Thickness (δ)	4.00	in	0.1016 m
Interior Lining Thermal Conductivity (k)	0.00017	kW/m-K	

THERMAL PROPERTIES DATA

Select Material: Gypsum Board

Scroll to desired material then Click on selection

Material	Thermal Conductivity k (kW/m-K)
Aluminum (pure)	0.206
Steel (0.5% Carbon)	0.054
Concrete	0.0016
Brick	0.0008
Glass, Plate	0.00076
Brick/Concrete Block	0.00073
Gypsum Board	0.00017
Plywood	0.00012
Fiber Insulation Board	0.00053
Chipboard	0.00015
Aerated Concrete	0.00028
Plasterboard	0.00016
Calcium Silicate Board	0.00013
Alumina Silicate Block	0.00014
Glass Fiber Insulation	0.000037
Expanded Polystyrene	0.000034

Reference: Klote, J., J. Milke, *Principles of Smoke Management*, 2002, Page 270.

PREDICTING FLASHOVER HEAT RELEASE RATE
METHOD OF McCAFFREY, QUINTIERE, AND HARKLEROAD (MQH)

Reference: *SFPE Handbook of Fire Protection Engineering*, 2nd Edition, 1995, Page 3-145.

$Q_{FO} = 610\, v(h_k A_T A_v (vh_v))$

Where
Q_{FO} = heat release rate necessary for flashover (kW)
h_k = effective heat transfer coefficient (kW/m^2-K)
A_T = total area of the compartment enclosing surface boundaries excluding area of vent openings (m^2)
A_v = area of ventilation opening (m^2)
h_v = height of ventilation opening (m)

Heat Transfer Coefficient Calculation

$h_k = k/\delta$ **Assuming that compartment has been heated thoroughly before flashover, i.e., $t > t_p$.**

Where
h_k = effective heat transfer coefficient (kW/m^2-K)
k = interior lining thermal conductivity (kW/m-K)
δ = interior lining thickness (m)

h_k = 0.002 kW/m^2-K

Area of Ventilation Opening Calculation

$A_v =$ $(w_v)(h_v)$

Where

A_v = area of ventilation opening (m^2)
w_v = vent width (m)
h_v = vent height (m)

$A_v =$ **2.60** m^2

Area of Compartment Enclosing Surface Boundaries

$A_T =$ $[2(w_c \times l_c) + 2(h_c \times w_c) + 2(h_c \times l_c)] - A_v$

Where

A_T = total area of the compartment enclosing surface boundaries excluding area of vent openings (m^2
w_c = compartment width (m)
l_c = compartment length (m)
h_c = compartment height (m)
A_v = area of ventilation opening (m^2)

$A_T =$ **131.18** m^2

Minimum Heat Release Rate for Flashover

$Q_{FO} = 610\, v(h_k A_T A_v (vh_v))$

$Q_{FO} =$ **557.07 kW** **ANSWER**

METHOD OF BABRAUSKAS

Reference: *SFPE Handbook of Fire Protection Engineering*, 2nd Edition, 1995, Page 3-145.

$Q_{FO} = 750\, A_v (vh_v)$

Where

Q_{FO} = heat release rate necessary for flashover (kW)
A_v = area of ventilation opening (m^2)
h_v = height of ventilation opening (m)

Minimum Heat Release Rate for Flashover

$Q_{FO} = 750\, A_v (vh_v)$

$Q_{FO} =$ **2849.74 kW** **ANSWER**

METHOD OF THOMAS

Reference: *SFPE Handbook of Fire Protection Engineering*, 2nd Edition, 1995, Page 3-146.

$Q_{FO} = 7.8\, A_T + 378\, A_v (vh_v)$

Where

Q_{FO} = heat release rate necessary for flashover (kW)
A_T = total area of the compartment enclosing surface boundaries excluding area of vent openings (m^2
A_v = area of ventilation opening (m^2)
h_v = height of ventilation opening (m)

Minimum Heat Release Rate for Flashover

$Q_{FO} = 7.8\ A_T + 378\ A_v\ (vh_v)$

$Q_{FO} =$ 2459.47 kW **ANSWER**

SUMMARY OF RESULTS	Flashover HRR
METHOD OF MQH	557 kW
METHOD OF BABRAUSKAS	2850 kW
METHOD OF THOMAS	2459 kW

NOTE

The above calculations are based on principles developed in the SFPE Handbook of Fire Protection Engineering, 2nd Edition, 1995.
Calculations are based on certain assumptions and have inherent limitations. The results of such calculations may or may not have reasonable predictive capabilities for a given situation, and should only be interpreted by an informed user.
Although each calculation in the spreadsheet has been verified with the results of hand calculation, there is no absolute guarantee of the accuracy of these calculations.
Any questions, comments, concerns, and suggestions, or to report an error(s) in the spreadsheets, please send an email to nxl@nrc.gov.

NRR

Office of Nuclear Reactor Regulation

CHAPTER 14. ESTIMATING PRESSURE RISE ATTRIBUTABLE TO A FIRE IN A CLOSED COMPARTMENT

14.1 Objectives

This chapter has the following objectives:

- Discuss some systems of pressure measurement.
- Explain how to calculate pressure rise.
- Define relevant terms including pressure rise.

14.2 Introduction

In a closed compartment or a compartment with small leakages, the release of heat from the combustion process will cause compartment pressure to rise as a result of the volumetric expansion of gases. It is this pressure rise that drives the mass flow out, and prevents mass flow into the compartment. In Chapter 2, we referred to this as the first stage of the fire.

When thermal energy rapidly accumulates in the form of hot gases, and when the compartment has small openings to the surroundings, this pressure rise is very rapid and any hydrostatic pressure differences with height are negligible. For example, an addition of 100 kW to a 60 m^3 (2,119 ft^3) enclosure with an opening of 0.01 m^2 (0.10 ft^2) will cause a steady-state pressure rise of ≈1,000 Pa (0.14 psi) in several seconds. The hydrostatic pressure difference decreases at a rate of 10 Pa (0.0014 psi) per meter as the height increases. In this case, we see that the hydrostatic pressure difference is negligible and the vent flow is determined by the pressure rise caused by the volumetric expansion of gases. Figure 14-1 illustrates the overpressure-time profile in an enclosure.

14.3 Definition of Pressure

Pressure can be defined as the amount of force brought to bear on some unit area of an object. When we press our thumb down on a table, we are applying force on the table. The harder we press, the greater the force, and the greater the pressure we apply to the table surface.

Similarly, the air in the sky above us presses down on our bodies and all objects around us with a pressure of approximately 14.7 pounds per square inch (psi) of surface area. This pressure, which is essentially the average air pressure at sea level, is also known as one standard atmosphere. A pressure of two atmospheres *generally* means that a pressure of 29.4 psi is present, or two times the standard atmospheric pressure of 14.7 psi.

We emphasize the word "generally" because pressure also has absolute and relative scales of measurement. The 14.7 psi of atmospheric pressure at sea level is an absolute measurement, which is more properly presented in units of pounds per square inch - absolute, or psia for short. Zero psia refers to a complete absence of pressure, such as one might find in the perfect vacuum of outer space. By contract, the most common relative scale of measurement, which is primarily used only in the United States, presents numerical values in terms of gauge pressure, where a reading of zero matches an absolute pressure of one standard atmosphere. In this system, an absolute pressure of 15.7 psia would be expressed as 1.0 pound per square inch-gauge, or 1.0

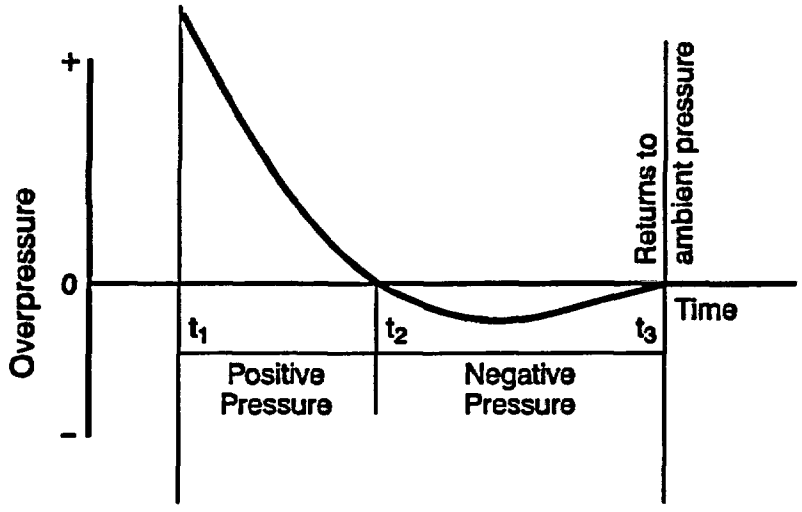

Figure 14-1 Overpressure Generated at a Fixed Location

psig for short. Thus, two atmospheres of absolute pressure would be equivalent to one atmosphere gauge pressure (Handbook of Chemical Hazard Analysis Procedures).

Among the other systems of pressure measurement that are of an absolute nature, the most common include the following examples:

(1) Millimeters of mercury (mm Hg) - 760 mm Hg are equal to one standard atmosphere.

(2) Inches of mercury (in. Hg) - 29.9 in. Hg are equal to one standard atmosphere.

(3) Pascals (Pa) or Newton per square meter (N/m^2) - 101,325 Pa or 101,325 N/m^2 are equal to one standard atmosphere.

(4) Bars - 1.01325 bars are equal to one standard atmosphere.

(5) Inches of water (in. H_2O) - 407.6 in. H_2O are equal to one standard atmosphere.

Inches of water and inches of mercury are not commonly used in the scientific community, with the exception that meteorologists have traditionally reported current atmospheric pressures in inches of mercury. Nevertheless, it is beneficial to know of their existence.

14.4 Pressure Rise Calculations

As previously discussed, the combustion process raises the temperature of a gaseous system. This increase in temperature, in turn, causes a pressure rise attributable to expansion of the gases. According to the ideal gas law, when heat is added to an ideal gas in a fixed volume, the pressure must rise in response to the temperature. In a building fire situation, the resulting pressure and the rate of pressure rise are often kept very small by gas leaks through openings in the walls of the buildings (such as cracks around windows and doors). However, situations may arise where the enclosure can be considered to be well sealed, such as certain compartments on ships.

According to Karlsson, and Quintiere (1999) the maximum pressure difference inside a compartment as a result of expansion of gases is given by the following expression:

$$\frac{P - P_a}{P_a} = \frac{\dot{Q}t}{V\rho_a c_v T_a} \qquad (14\text{-}1)$$

Where:

P = compartment pressure attributable to combustion (atm)
P_a = initial atmospheric pressure (atm)
$\dot{Q}$ = heat release rate of the fire (kW)
t = time (sec)
V = compartment volume (m^3)
ρ_a = ambient air density (kg/m^3)
c_v = specific heat of air at constant volume (kJ/kg-K)
[values of c_v range from 0.71 to 0.85 kJ/kg-K]
T_a = ambient air temperature (K)

14.5 Assumptions and Limitations

The method discussed in this chapter is subject to several assumptions and limitations.

(1) The energy release rate is constant.

(2) The mass loss rate of the fuel is neglected in the conversion of mass.

(3) The specific heat does not change with temperature.

(4) The hydrostatic pressure difference over the height of the compartment is ignored and assumed to be negligible compared to the dynamic pressure.

14.6 Required Input for Spreadsheet Calculations

The user must obtain the following information before using the spreadsheet:

(1) compartment width (ft)

(2) compartment length (ft)

(3) compartment height (ft)

(4) fire heat release rate (ft)

(5) time after ignition (s)

14.7 Cautions

(1) Use (Compartment_Over_Pressure_Calculations.xls) spreadsheet on the CD-ROM for calculations.

(2) Make sure to input values using correct units.

14.8 Summary

According to the ideal gas law, when heat is added to an ideal gas in a fixed volume, the pressure must rise in response to the temperature. In a building fire situation, the resulting pressure and the rate of pressure rise are often kept small by gas leaks through openings in the walls of the buildings (uch as cracks around windows and doors). However, situations may arise where the enclosure can be considered to be well sealed.

The purpose of this chapter is to provide simple analytical method for calculating the dynamic pressure build-up in a closed compartment. We then use the results to show that the rapid pressure rise. This result can be used to justify the so-called "constant pressure assumption," which is typically used when examining a "leaky" compartment fire.

14.9 References

Handbook of Chemical Hazard Analysis Procedures, Federal Energency Management Agency (FEMA), U.S Department of Transportation (DOT), and U.S. Environmental Protection Agency (EPA).

Karlsson, B., and J.G. Quintiere, *Enclosure Fire Dynamics*, Chapter 8, "Conservation Equations and Smoke Filling," CRC Press LLC, New York, pp. 181–225, 1999.

This page intentionally left blank.

14.10 Problems

Example Problem 14-10.1

Problem Statement

A closed compartment in a facility pump room has dimensions 20 ft width x 25 ft long x 12 ft high (w_c x l_c x h_c). A fire starts with a constant HRR $\dot{Q}$ = 100 kW. Estimate the pressure rise attributable to the expansion of gases after 10 seconds.

Solution

Purpose:

(1) Estimate the pressure rise in the compartment 10 seconds after ignition.

Assumptions:

(1) The energy release rate is constant

(2) The mass rate of the fuel is neglected in the conversion of mass

(3) The specific heat is constant with temperature

(4) The hydrostatic pressure difference over the height oft he compartment is negligible compared to the dynamic pressure

Spreadsheet (FDT*) Information:

Use the following FDT*:

(a) Compartment_Over_Pressure_Calculations.xls

FDT* Input Parameters:

-Compartment Width (w_c) = 10 ft

-Compartment Length (l_c) = 12 ft

-Compartment Height (h_c) = 10 ft

-Fire Heat Release Rate $(\dot{Q})$ = 100 kW

-Time After Ignition (t) = 10 sec

Results*

Pressure Rise	**12.12 kPa (1.76 psi)**

*see spreadsheet on next page

Spreadsheet Calculations

CHAPTER 14 - METHOD OF ESTIMATING PRESSURE RISE DUE TO A FIRE IN A CLOSED COMPARTMENT

The following calculations estimate the pressure rise in a compartment due to fire and combustion.
Parameters should be specified ONLY IN THE YELLOW INPUT PARAMETER BOXES.
All subsequent output values are calculated by the spreadsheet and based on values specified in the input parameters. This spreadsheet is protected and secure to avoid errors due to a wrong entry in a cell(s).
The chapter in the guide should be read before an analysis is made.

INPUT PARAMETERS

COMPARTMENT INFORMATION

Compartment Width (w_c)	10.00	ft	3.05 m
Compartment Length (l_c)	12.00	ft	3.66 m
Compartment Height (h_c)	10.00	ft	3.05 m
Fire Heat Release Rate (Q)	100.00	kW	
Time After Ignition (t)	10.00	sec	

AMBIENT CONDITIONS

Ambient Air Temperature (T_a)	68.00	°F	20.00 °C
			293.00 K
Initial Atmospheric Pressure (P_a)	14.70	psi	101.35 kPa
Specific Heat of Air at Constant Volume (c_v)	0.70	kJ/kg-K	
(Note: Values of c_v ranges from 0.71 to 0.85 kJ/kg-k)			
Ambient Air Density (ρ_a)	1.20	kg/m³	

METHOD OF KARLSSON AND QUINTIERE

Reference: Karlsson and Quintiere, *Enclosure Fire Dynamics*, 1993, Page 192

$(P-P_a)/P_a = Qt/(V\rho_a c_v T_a)$

Where
- P = compartment pressure due to fire and combustion (kPa)
- P_a = initial atmospheric pressure (kPa)
- Q = heat release rate of the fire (kW)
- t = time after ignition (sec)
- V = compartment volume (m³)
- ρ_a = ambient density (kg/m³)
- c_v = specific heat of air at constant volume (kJ/kg-K)
- T_a = ambient air temperature (K)

Compartment Volume Calculation

$V = w_c \times l_c \times h_c$

Where
- V = volume of the compartment (m³)
- w_c = compartment width (m)
- l_c = compartment length (m)
- h_c = compartment height (m)

V = 33.98 m³ 1200 ft³

Pressure Rise in Compartment

$(P-P_a)/P_a = Qt/(V\rho_a c_v T_a)$

$(P-P_a)/P_a =$ 0.120 atm

Multiplying by the atmospheric pressure (P_a) = 101 kPa

Gives a pressure difference = 12.12 kPa 1.76 psi

ANSWER

This example shows that in a very short time the pressure in a closed compartment rises to quite large value.

Most buildings have leaks of some sort. The above example indicates that even though a fire compartment may be closed, the pressure is very rapid and would presumably lead to sufficient leaks to prevent further pressure rise from occurring. We will use this conclusion when dealing with pressure rises in enclosures with small leaks

NOTE

The above calculations are based on principles developed in the Enclosure Fire Dynamics. Calculations are based on certain assumptions and have inherent limitations. The results of such calculations may or may not have reasonable predictive capabilities for a given situation, and should only be interpreted by an informed user.

Although each calculation in the spreadsheet has been verified with the results of hand calculation, there is no absolute guarantee of the accuracy of these calculations.

Any questions, comments, concerns, and suggestions, or to report an error(s) in the spreadsheet, please send an email to nxi@nrc.gov.

NRR

Office of Nuclear Reactor Regulation

This page intentionally left blank.

CHAPTER 15. ESTIMATING THE PRESSURE INCREASE AND EXPLOSIVE ENERGY RELEASE ASSOCIATED WITH EXPLOSIONS

15.1 Objectives

This chapter has the following objectives:

- Define the nature and implications of an explosion.
- Explain the various causes, hazards, and effects of explosions.
- Explain how to calculate the energy released by an explosion.
- Explain how to calculate the pressure increase attributable to an explosion.

15.2 Introduction

In its most widely accepted sense, the term "explosion" means a bursting associated with a loud, sharp noise and an expanding pressure front, varying from a supersonic shock wave to a relatively mild wind. The term has also been extended to encompass chemical or physical/chemical events that produce explosions.

An explosion is defined as a sudden and violent release of high-pressure gages into the environment. The primary key word in this definition is "rapid." The release must be sufficiently fast so that energy contained in the high-pressure gas dissipates in a shock wave. The second key word is "high pressure," which signifies that, at the instant of release, the gas pressure is above the pressure of the surroundings. Note that the basic definition is independent of the source or mechanism by which the high-pressure gas is produced (Senscal, 1997).

Despite this commonly accepted definition, the literature includes many other interrelations of the concept of an explosion:

- A rapid release of high pressure gases into the environment (Cruice, 1991).

- A sudden conversion of potential energy (chemical or mechanical) into kinetic energy in the form of rapidly expanding gases (NFPA, 921).

- A physical reaction characterized by four elements: high-pressure gas, confinement or restriction of the pressure, rapid production or release of that pressure, and change or charge to the confining (restricting) structure, container, or vessel caused by the pressure release ... the generation and violent escape of gases are the primary criteria of an explosion (NFPA 921).

- The noise or bang due to the sudden release of a strong pressure wave or blast wave, which relates to the basic meaning of the word, "sudden outburst" (Bodhurtha, 1980).

- An exothermic chemical process that when occurring at constant volume, gives rise to a sudden and significant pressure rise (Vervalin, 1985).

- In general scientific terms, an explosion is said to have occurred in the atmosphere if energy is released over a sufficiently small time and in a sufficiently small volume so as to

generate a pressure wave of finite amplitude traveling away from the source (Baker et al., 1983). This energy may have originally been stored in the system in a variety of forms; these include nuclear, chemical, electrical, or pressure energy, for example. However, the release is not considered to be explosive unless it is rapid enough and concentrated enough to produce a pressure wave that one can hear. Even though many explosions damage their surroundings, it is not necessary that external damage be produced by the explosion. All that is necessary is that the explosion is capable of being heard.

While these definitions differ, they share the following characteristics of an explosion:

- release of high pressure gases
- rapid expansion of gases
- formation of a pressure wave or blast wave of sufficient intensity to be hear

The last of these characteristic is often favored by explosion investigators. The ability to be heard enables investigations to define whether an incident was an explosion, based on what happened and what the results were.

Explosions are often characterized by their primary means of generation (physical or chemical); this categorization includes the following types of explosions:

- Physical explosions are those caused when the high-pressure gas is generated only by mechanical means without any chemical change, as in the following types of explosions:

  — external heating of a tank resulting in increased internal pressure and resultant failure of the tank
  — sudden release of super-heated liquid which flash-evaporates, causing a rapid explosion

- Chemical explosions are those when the high-pressure gas is generated only by chemical reactions without any physical or chemical interaction, as in the following:

  — Combustion explosions are caused by rapid oxidation of combustion material, which results in explosion of gases that triggers a pressure wave. Combustion explosions include the following types:

  - dust explosions
  - gas explosions
  - natural gas explosions
  - backdraft explosions
  - mists

  — Thermal explosions are a special class of chemical explosions where the heat released by the reaction of two or more chemical compounds results in a more rapid reaction rate that eventually results in an explosion. These types of explosions are a great concern in chemical processes.

  — Condensed phase explosions are those caused by rapid reactions of chemical components in the solid or liquid phase. This type of chemical explosion includes

those resulting from high explosives or propellants (solid and liquid) used for missile fuel.

— Nuclear explosions are associated with the fission or fusion of matter.

— Detonations and deflagrations are often distinguished by the speed or rate of propagation of the combustion wave through the material. In a detonation, the flame or combustion wave propagates through the reactants at supersonic speeds on the order of 2,000 m/sec (6,562 ft/sec). By contrast, the rate of propagation in a deflagration is below the speed of sound in air at 20 °C (68 °F), which is approximately 330 m/sec (1,082 ft/sec). The fact that detonations propagate at supersonic speeds implies the existence of a shock wave, which is the reason that the reactions propagate so rapidly. (The shock wave compresses reactants, causing the reaction to occur faster.) The practical distinction between detonations and deflagrations also relates to the amount of damage caused. Specifically, the pressure attained during a detonation can be up to 20 atmospheres (284 psi). By contrast, the overpressure caused by the pressure in a typical deflagration wave is on the order of 1 atmosphere (14.70 psi) for C_2H_2 in air.

15.3 Explosion Hazard

The hazards associated with deflagration include catastrophic equipment failure, ejection of flame and unburned product (possibly hazardous in its own right) into the surroundings, possible secondary explosions leading to catastrophic facility damage, and personal injury. The following elements must exist *simultaneously* in order for a deflagration to occur:

- a flammable mixture consisting of a fuel and oxygen, usually from air, or other oxidant
- a means of ignition
- an enclosure

The term "flammable mixture" denotes that the fuel and oxygen components are intimately mixed and are each present at a concentration that falls within a flammable composition boundary characteristic of each system of fuel, oxygen, and inert material (inert gas or solid). Ignition of a flammable mixture occurs when a point source of sufficient energy achieves a temperature above the ignition temperature of the mixture. All incandescent sparks (e.g., mechanical, electrical, electrostatic) have sufficient temperature to cause ignition, but may lack sufficient energy to heat a minimal propagating mass to its ignition temperature. A hot process surface may have a temperature below that required for prompt ignition, but may have a large energy content. Dust deposits on such surfaces can be subjected to accelerated self-heating and eventual ignition.

Should ignition of a flammable mixture occur within an enclosure, regardless whether of the enclosure has ventilation points, the internal pressure will increase as necessary, to satisfy the non-steady-state material balance equation. The time needed to achieve the maximum deflagration pressure depends on size of the enclosure and the characteristics of the fuel, but generally can extend up to a few hundred milliseconds. Some venting of the expanding combustion gases occurs through normal process openings, but these are usually too small to prevent the development of destructive pressures.

15.4 Explosive Range

A certain quantity—neither too little nor too much—of flammable gas mixed with a certain quantity of air allows a mixture to become explosive and propagate the explosion flame. The lower and upper boundaries of this "explosive range" are known as the lower explosion limit (LEL) and the upper explosion limit (UEL) respectively[1]. When the quantity of flammable gas and/or air is either below or above these boundaries, the mixture is not explosive and will not propagate the explosion flame. At the LEL or UEL, the mixture will burn when ignited, causing an insignificant flame propagation. Between the two boundaries, there is a point at which flame propagation reaches its maximum.

15.5 Backdraft Explosion

Fires in oxygen-starved environments result in unburned fuel, "fuel vapor", which is a complex mixture of combustion gases, vapors, and aerosols suspended in the smoke. If the gas layer is hot enough (i.e., at its ignition temperature) it may immediately ignite when the fuel-rich smoke layer mixes with air (thereby receiving adequate oxygen) when the smoke-filled compartment or building is vented.

By contrast, when the gas layer is relatively cool, particularly in a severely oxygen-restricted fire, the fuel vapor may not immediately ignite when the compartment or building is vented. Rather, in such instances the ignition of the fuel vapor may be delayed until fresh air is introduced, mixes, with the vapor, and makes its way back to the fire source. When this occurs, the flame itself becomes the ignition source, and the ignition delay results from the time required to mix the fuel-rich smoke layer with oxygen-rich fresh air. This phenomenon, known as a "backdraft explosion", has the characteristics of a premixed fuel/air deflagration.

15.6 Smoke Explosion

It is also possible for a smoldering fire to produce sufficient unburned fuel and carbon monoxide to form a premixed combustible atmosphere. If the smoldering fire raises the temperature to the autoignition temperature of the mixture, the smoke/gas cloud will deflagrate causing a "smoke explosion." Such explosions have been observed in smoldering fires involving polyurethane foams.

15.7 Unconfined and Confined Explosions

Explosions that occur in open air, known as "unconfined explosions,"are fundamentally different—and require different countermeasures—than "confined explosions," which occur within some sort of containment. Confined explosions often occur in a process vessel or pipework, but may also occur in buildings. The explosion of a flammable mixture in a process vessel or pipework may be a detonation or a deflagration. The overpressure in a confined explosion is attributable to the expansion of the hot gases and may be exacerbated by the release of gases through an explosion vent (even a door or window) when the resulting turbulence produces a second pressure peak, as illustrated in Figure 15-1 (Harris, 1983).

---

[1]The term upper flammability limit (UFL) and lower flammability limit (LFL) are also used to describe the flammable range of gases. For our purpose they are synonym with UEL and LEL respectively.

Confined explosion usually will not cause an accidental release of gas in any quantity directly into the atmosphere. Rather, such explosions usually release gases within some form of such as compartment or building of an industrial plant. If a flammable mixture forms and is ignited under these contained conditions, a confined gas explosion will occur. Moreover, if a gas is accidentally released into the air, mixes with air and is ignited, the flame front travel through the mixture, propagating in a spherical geometry whenever possible rather than remaining stationary, as illustrated in Figure 15-2.

15.8 Estimating the Effects of Explosions

When a firecracker or a stick of dynamite explodes, the violence and speed of the reactions taking place produce what is referred to as either a shock wave or a blast wave. Technically speaking, there is a difference between these two terms, but we will treat them rather interchangeably here. Either type of wave can be thought of as a thin shell of highly compressed air and/or hot gases that expands rapidly in all directions from the point at which the explosion is initiated. Such waves can move at velocities exceeding the speed of sound in air, and, therefore, are capable of producing sonic "booms," much like those associated with supersonic aircraft. This is how significant explosions produce a loud "bang."

The damage caused by a shock or blast wave striking an object or a person is a complex function of many factors, and it is well beyond the scope of this chapter to describe all of the complex interactions involved. Instead, we will simply refer to the wave as a rapidly expanding shell of compressed gases. We can then measure the strength of the wave in units of pressure (psi), and we can relate the effects of peak overpressure within the wave (i.e., the maximum pressure in the wave in excess of normal atmospheric pressure) to the level of property or personal injury that is likely to result.

Table 15-1 lists damage effects on people and property, which might be expected to result from explosions characterized by various peak overpressures (Clancey, 1972). It is important to note that peak overpressures in a shock or blast wave are highest near the source of the explosion and decrease rapidly with distance from the explosion site. Additionally, it must be noted that the extent of damage incurred is heavily influenced by the location of the blast relative to nearby reflecting surfaces.

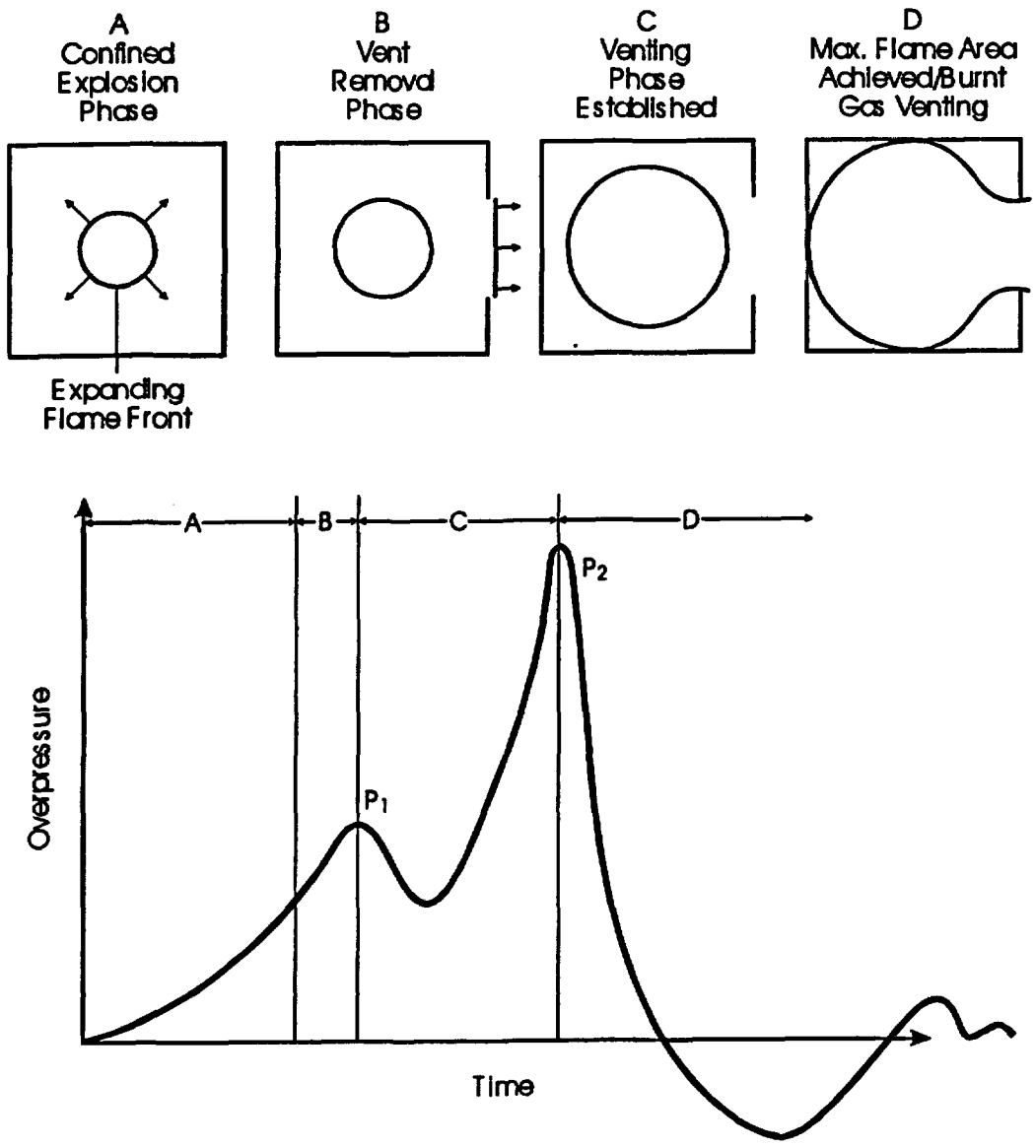

Figure 15-1 Pressure Peaks of an Explosion Inside a Building

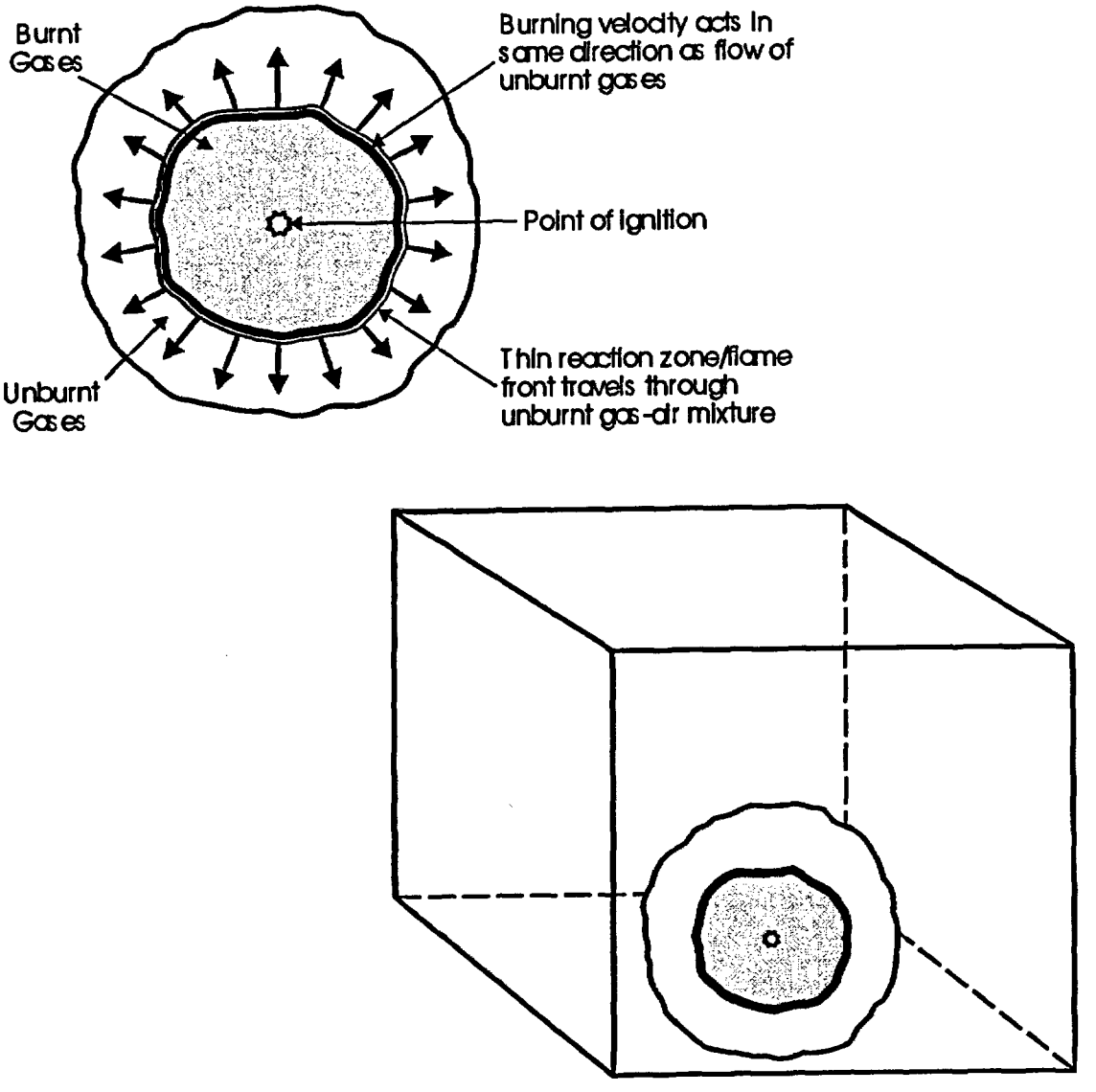

Figure 15-2 Propagating of Explosion Flame

Table 15-1. Estimated Damage Attributable to Explosive Overpressure (Clancey, 1972) (Waiting for copyright permission)	

Table 15-1. Estimated Damage Attributable to Explosive Overpressure (Clancey, 1972) (continued) (Waiting for copyright permission)	

As shown in the Table 15-1, an explosion may give rise to (1) blast damage, (2) thermal effects, (3) missile damage, (4) ground shock, (5) cratering, and (6) personal injury. Not all of these effects arise from every explosion. For example, an aerial blast may not cause a crater.

In addition to the personal injuries and property damage caused by direct exposure to peak overpressures, the blast wave also has the potential to cause indirect, secondary effects:

- Damage may result from missiles, fragments, and environmental debris set in motion by the explosion or by the heat generated.
- Damage may result from forcible movement of exposed people and their subsequent impact with ground surfaces, walls, or other stationary objects.

Many of the data on the effects of explosions come from studies of industrial and military explosives, but an increasing amount of information is becoming available from the investigation of process plant explosions.

15.8.1 Estimating Explosive Energy Release In a Confined Explosion

One typical explosion in an enclosure is caused by flammable gas leaking, which mixes with air in the enclosure and subsequently ignites to cause an explosion.

The energy released by expansion of compressed gas upon rupture of a pressurized enclosure may be estimated using the following equation (Zalosh, 1995):

$$E = \alpha \Delta H_c m_F \quad (15\text{-}1)$$

Where:

E = explosive energy released (kJ)

α = yield. (I.e., the fraction of available combustion energy participating in blast wave generation)

ΔH_c = theoretical net heat of combustion (kJ/kg)

m_F = mass of flammable vapor release (kg)

The yield, α, is typically in the range of 1-percent (0.01) for unconfined mass releases, to 100 percent (1.0) for confined vapor releases (Zalosh, 1995). Table 15-2 presents the theoretical net heat of combustion for flammable gases.

Table 15-2. Heat of Combustion, Ignition Temperature, and Adiabatic Flame Temperature* of Flammable Gases

Flammable Gas	Heat of Combustion ΔH_c (kJ/kg)	Ignition Temperature T_{ig} °C (°F)	Adiabatic Flame Temperature T_{ad} °C (°F)
Acetylene	48,220	755 (1,391)	2,637(4,779)
Carbon monoxide (commercial)	10,100	765 (409)	2,387 (4,329)
Ethane	47,490	945 (1,733)	1,129 (2,064)
Ethylene	47,170	875 (1,607)	2,289 (4,152)
Hydrogen	130,800	670 (1,238)	2,252 (4,085)
Methane	50,030	1190 (2,174)	1,173 (2,143)
n-Butane	45,720	1025 (1,877)	1,339 (2,442)
n-Heptane	44,560	-	1,419 (2,586)
n-Octane	44,440	-	1,359 (2,478)
n-Pentane	44,980	-	1,291 (2,356)
Propane	46,360	1,010 (1,850)	1,281 (2,338)
Propylene	45,790	1,060 (1,940)	2,232 (4,050)

*Adiabatic flame temperature of lower limiting fuel/air mixture.

15.8.2 TNT Mass Equivalent Calculations

One of the most common methods used to estimate the effects of an explosion is to relate the exploding fuel to trinitrotoluene (TNT). This method converts the energy contained in the flammable cloud into an equivalent mass of TNT, primarily because blast effects of TNT have been extensively studied as a function of TNT weight and distance from the source. Hence, we can infer

the blast effects of an explosion by relating an explosion to an "equivalent" explosion of TNT. To do so, we relate a given fuel type and quantity to an equivalent TNT charge weight, as follows (Zalosh, 1995):

$$W_{TNT} = \frac{E}{4500} \qquad (15\text{-}2)$$

Where:

W_{TNT} = weight of TNT (kg)
E = explosive energy released (kJ)

15.8.3 Blast Effects

Blast effects can also be related to the equivalent weight of TNT using by the relationship between the distance from the source, the charge weight, and the overpressure caused by the blast wave, including the reflected shock wave. Figure 15-3 (Zalosh, 1995) gives the relationship between overpressure and "scaled distance" (D_{sc}) (in English and metric units). Scaled distance is the distance at which the overpressure is calculated divided by the cube root of the TNT charge weight.

$$D_{SC} = \frac{D}{W_{TNT}^{\frac{1}{3}}} \qquad (15\text{-}3)$$

Where:

D_{sc} = scaled distance [m/(kg)$^{1/3}$]
D = distance at which the overpressure is calculated (m)
W_{TNT} = weight of TNT (kg)

15.9 Effects of Pressure on Humans and the Environments

Human beings are capable of withstanding relatively high dynamic pressures and considerably higher static pressures. When people are fatally injured as a result of blast waves, it is usually because of falling objects, rather than the pressure associated with the blast wave. Table 15-3 summarizes the pressure effects of blast waves on humans (Fischer et al., 1995), which also depend on the impulse of the blast wave. With the exception of smoke gas explosions, fires seldom reach pressures as high as those listed in Table 15-3. A maximum pressure of 8 bar is produced if a premixed gas-air mixture is ignited inside a building. Outside a building, similar explosion produce pressures of the same order of magnitude if the release results in an unconfined vapor cloud explosion (UVCE). Even higher pressures result if the release causes a detonation both inside and outside a building. However, detonations are very rare.

Usually, it is difficult to predict the pressures produced. In addition, the consequences for humans depend to a significant degree on whether something nearby can strike people in the vicinity of the explosion. Consequently, it is generally not worth the effort to find better values for pressure effects on humans. Similarly, pressure effects are usually limited to a small area, and the effect of pressure on the environment is seldom discussed.

Figure 15-3 Ideal Blast Wave Overpressure vs. Scaled Distance
(SFPE Handbook, 2nd Edition, Figure 3-16.14, Zalosh, 1995,)
(Waiting for copyright permission)

Table 15-3. Pressure Effects on Humans	
Pressure (kPa)	Effect
35 kPa	Limit for eardrum rupture
70 kPa	Limit for lung damage
100 kPa	50-percent eardrum rupture
180 kPa	1-percent mortality
210 kPa	10-percent mortality
260 kPa	50-percent mortality
300 kPa	90-percent mortality
350 kPa	99-percent mortality

15.10 Effects of Pressure on Components

Existing literature provides only limited data on the effects of pressure on components (such as machines); however, it appears that components are usually unaffected by pressure if they are solid and more sensitive to pressure variations if they contain cavities. When it comes to building elements such as windows, walls, and doors, the literature does provides acceptable data. Table 15-4 lists typical failure pressures of such elements (Harris, 1983).

Table 15-4. Typical Failure Pressures of Some Building Elements	
Element	Typical Failure Pressure (kPa)
Glass windows	2–7
Room doors	2–3
Light partition walls	2–5
50-mm-thick breeze block walls	4–5
Unrestrained brick walls	7–15

15.11 Estimating the Pressure Increase Attributable to a Confined Explosion

The combustion process raises the temperature of a gaseous system and that, in turn, increases the pressure of the system by expanding the gases. The "ideal gas law" quantifies the effects, as follows:

$$P_1T_1 = P_2T_2 \qquad (15\text{-}4)$$

Where P_1T_1 and P_2T_2 represent the pressure and temperature at state 1 and state 2, respectively in a constant volume system.

The pressure increase caused by the expansion of the gases is determined by the following equation:

$$P_2 = P_1 \frac{T_1}{T_2} \qquad (15\text{-}5)$$

Assuming that the entire confining enclosure is filled with a gas/air mixture, the maximum pressure inside the enclosure at the end of combustion (P_{max}) is given by the following equation:

$$\frac{P_{max}}{P_{amb}} = \frac{T_{ad}}{T_{amb}} \qquad (15\text{-}6)$$

and

$$P_{max} = \left(\frac{T_{ad}}{T_{amb}}\right) P_{amb} \qquad (15\text{-}7)$$

Where:

P_{max} = maximum pressure at end of combustion (kPa)
P_{amb} = initial ambient atmospheric pressure prior to ignition (kPa)
T_{ad} = adiabatic flame temperature of burned gas (K)
T_{amb} = initial ambient temperature gas/air mixture (K).

Remember that absolute temperature (K or R) must be used in these equations. The adiabatic flame temperature of the burned gas should be approximately the values shown for the given flammable gas(se) in Table 15-2.

15.12 Assumptions and Limitations

The methods discussed in this chapter are subject to several assumptions and limitations:

(1) The method assumes point source blast wave energy correlation, i.e., TNT equivalent energy.

(2) The ideal point source blast wave correlations cannot be valid within or near the flammable vapor cloud.

(3) Flammable gases and vapors are mixed with air (or some other oxidant) in proportions between the lower and upper flammable limits.

(4) It is important to recognize that practical applications of flammability/exposibility data for explosion hazard evaluation should account for nonuniform or stratified vapor-air mixtures.

15.13 Required Input for Spreadsheet Calculations

The user must obtain the following information to using the spreadsheet:

(1) fuel type (material)

(2) mass of flammable vapor (lb)

(3) ambient temperature (°F)

(4) ambient pressure (psi)

15.14 Cautions

(1) Use (Explosion_Claculations.xls) spreadsheet in the CD-ROM for pressure increase and explosive energy release calculations associated with explosions.

(2) Make sure to enter the input parameters in the correct units.

15.15 Summary

This chapter discusses methods of calculating the pressure increase and explosive energy release associated with explosions. Within that content, an explosion is defined as a sudden and violent release of high-pressure gases into the environment. The violence of the explosion depends on the rate at which the energy of the high-pressure gases is released. The energy stored in a car tire, for example, is capable of causing an explosive burst, but it can also be dissipated by gradual release. In general, an explosion can release any of the these basic types of energy (1) physical energy (2) chemical energy.

Physical energy may take such forms as pressure energy in gases, strain energy in metals, or electrical energy. Examples of the violent release of physical energy include the explosion of a vessel as a result of high gas pressure and the sudden rupture of a vessel as a result of brittle fracture. Another physical form is thermal energy, which generally play an important role in creating the conditions for an explosion, rather than as a source of energy for the explosion itself. In particular, superheating a liquid under pressure causes flashing of the liquid if it is let down to atmospheric pressure.

Chemical energy is derived from a chemical reaction. Examples of the violent release of chemical energy are explosion of a vessel as a result of the combustion of flammable gas. Chemical explosions are either (1) uniform explosions or (2) propagating explosions. An explosion in a vessel tends to be a uniform explosion, while an explosion in a long pipe produces a propagating explosion.

15.16 References

Baker, W.E., et al., *Explosion Hazards and Evaluation*, Amsterdam Elservier Science Publishing Company, 1983.

Bodhurtha, F.T., *Industrial Explosion Prevention and Protection*, McGraw-Hill Book Company, New York, 1980.

Clancey, V.J., "Diagnostic Features of Explosion Damage," Sixth International Meeting of Forensic Science, Edinburgh, England, 1972.

Cruice, W.J., "Explosions," Section 1, Chapter 5, *NFPA Fire Protection Handbook*, 17th Edition, National Fire Protection Association, Quincy, Massachusetts, 1991.

Fischer, S., et al., *"Vådautsläpp av brandfarliga och giftiga gaser och vätskor,"* (in Swedish), FOA-D-95-00099-4.9-SE, Försvarets Forskningsanstalt Stockholm, 1995.

Harris , R.J., *The Investigation and Control of Gas Explosions in Building and Heating Plant*, British Gas, 1983.

NFPA 921, "Fire and Explosion Investigations, 1992 Edition, National Fire Protection Association, Quincy, Massachusetts.

Senecal, J.A., "Explosion Prevention and Protection," Section 4, Chapter 14, *NFPA Fire Protection Handbook*, 18th Edition, National Fire Protection Association, Quincy, Massachusetts, 1997.

Vervalin, C.H., Editor, *Fire Protection Manual for Hydrocarbon Processing Plants*, Volume 1, 3rd Edition, Gulf Publishing Company, Houston, Taxes, 1985.

Zalosh, R.G., "Explosion Protection," Section 3, Chapter 16, *SFPE Handbook of Fire Protection Engineering*, 2nd Edition, P.J. DiNenno, Editor-in-Chief, National Fire Protection Association, Quincy, Massachusetts, 1995.

15.17 Additional Readings

Fardis, M.N., A. Nacar, and M.A. Delichatsios, "R/C Containment Safety Under Hydrogen Detonation," *Journal of Structural Engineering*, Volume 109, pp. 2511–2527, 1983.

Handbook of Chemical Hazard Analysis Procedures, Federal Emergency Management Agency (FEMA), U.S. Department of Transportation (DOT), and U.S. Environmental Protection Agency (EPA).

Lees, F.P., *Loss Prevention in the Process Industries, Hazard Identification, Assessment and Control*, Volume, 1, Butterworths-Heinnemann, London and Boston, 1980.

15.18 Problems

Example Problem 15-18.1

Problem Statement

In a NPP, a liquid propane gas (LPG) driven forklift is used to un load materials from an upcoming outage. Mechanical failure could result in the release of LPG in the area. The maximum fuel capacity of the forklift is 10 gallons. Calculate pressure rise, energy released by expanding LPG, equivalent TNT charge weight, and scaled distance in the area. Assume mass of the vapor released is 48 lb.

This page intentionally left blank.

CHAPTER 16. CALCULATING THE RATE OF HYDROGEN GAS GENERATION IN BATTERY ROOMS

16.1 Objectives

This chapter has the following objectives:

- Explain how hydrogen gas is generated in a battery room.
- Describe the conditions under which hydrogen gas will ignite.
- Describe possible ignition sources in a battery room.
- Explain methods of controlling the combustion of hydrogen gas.
- Describe how to estimate hydrogen gas generation rates.

16.2 Introduction

Battery rooms in NPPs represent a potential problem area because of the generation of hydrogen gas. An NPP is typically equipped with large banks of 250-V dc and 125-V dc battery systems (NUREG/CR-2726). The 250-V dc system consists of two banks of 120 lead-calcium (lead-acid) storage cells, and the 125-V dc system typically contains four banks of 60 cells. Each bank is mounted in two rows of battery racks and located in its own battery room.

During operation, as the batteries change chemical energy to electrical energy, the sulfuric acid content of the electrolyte becomes depleted. Therefore, the batteries must be recharged if they are to be used continuously. This is done by connecting a dc charging source that enables current to flow through the battery in the direction opposite of its normal flow, thereby driving the acid back into the electrolyte. However, the byproducts of this charging process, or electrolysis, can present a safety issue. As a cell becomes nearly charged, the charging current becomes greater than that necessary to force the remaining amount of sulfuric acid back into the electrolyte. This results in ionization of the water in the electrolyte liberates hydrogen gas at the positive plate. The maximum rate of formation is 0.42×10^{-3} m^3 (0.42 liter) of hydrogen and 0.21×10^{-3} m^3(0.21 liter) of oxygen per ampere-hour overcharge at standard temperature and pressure. The gas mixture is explosive when the hydrogen concentration in air exceeds 4.1-percent by volume.
Although the release of this gas is undesirable, the process is necessary to develop a full charge in the cell. Consequently, NPPs must take precautions to prevent explosions from ignition of the flammable gas mixture of hydrogen and oxygen formed during overcharging of lead-acid cells. NPPs employ several methods to reduce the risk associated with high hydrogen concentrations. Regardless of the method used, proper implementation requires an accurate measurement of the hydrogen concentration. A variety of hydrogen detectors are available for use in NPPs. A standard practice is to set hydrogen detection devices to activate at 2.0 to 2.5-percent by volume of the lower explosive limit (LEL).

16.3 Combustion of Hydrogen Gas

Hydrogen gas has an extremely wide flammability range and the highest burning velocity of any gas. Its ignition temperature is reasonable high [500 °C (932 °F)], but its ignition energy is very low. Because hydrogen contains no carbon, it burns with a nonluminous flame, which is often invisible in daylight. At ordinary temperatures, hydrogen is very light, weighing only about 1/15 as much as air.

Combustion of hydrogen according to the reaction—

$$2H_2 + O_2 \text{ ---------> } 2H_2O + \text{Energy (heat)}$$

results in a release of about 57.8 kcal/g-mole (5.2×10^4 Btu/lb-mole) of hydrogen burned (NUREG/CR-6042). For a flammable gas mixture, the flammability limits are defined as the limiting concentrations of fuel, at a given temperature and pressure, in which a flame can propagate indefinitely. Limits for upward propagation of flames are wider than those for downward propagation. Limits for horizontal propagation are between those for upward and downward propagation.

The lower flammability limit (LFL) is the minimum concentration of hydrogen required to propagate a flame, while the upper flammability limit (UFL) is the maximum concentration. At the LFL, the hydrogen is in short supply and the oxygen (air) is present in excess. At the UFL for hydrogen in air, the oxygen (air) is in short supply, about 5-percent oxygen by volume. In air at standard temperature and pressure (25 °C, 1 atm), and 100-percent relative humidity, the LFL for hydrogen combustion is 4.1-percent hydrogen concentration by volume. Table 16-1 indicates the approximate hydrogen concentrations required for combustibility in air (NUREG/CR-6042).

Table 16-1. Hydrogen Flammability Limits in Air at Room Temperature

Possible Reaction	Lower Flammability Limit Volume Percent of Hydrogen	Upper Flammability Limit Volume Percent of Hydrogen
Upward propagation	4.1	74
Horizontal propagation	6.0	74
Downward propagation	9.0	74

Figure 16-1 shows the flammability limits of hydrogen with the addition of excess carbon dioxide and nitrogen (diluents). Note that with 75-percent additional nitrogen, the atmosphere is inert. This corresponds to 5-percent oxygen at the limit of the flammable region, a value very close to that of the UFL for hydrogen air combustion. Similarly, the atmosphere is inert when the carbon dioxide concentration is 60-percent or above, corresponding to 8-percent oxygen or less. The larger specific heat of carbon dioxide reduces the flame temperature and flame velocity; hence, carbon dioxide suppresses flammability more than nitrogen. By contrast, it requires about 60-percent steam to inert a hydrogen-air-steam mixture. Figure 16-2 indicates the regions of flammability of hydrogen-air-steam mixtures (Shapiro and Moffette, 1957).

16.4 *Ignition of Hydrogen Gas*

Accidental ignition of hydrogen could be caused by several sources in a structure if the hydrogen concentration in air were to reach sufficient levels. Ignition of dry hydrogen-air mixtures, particularly when the mixtures are well within the flammability limits, can occur with a very small input of energy

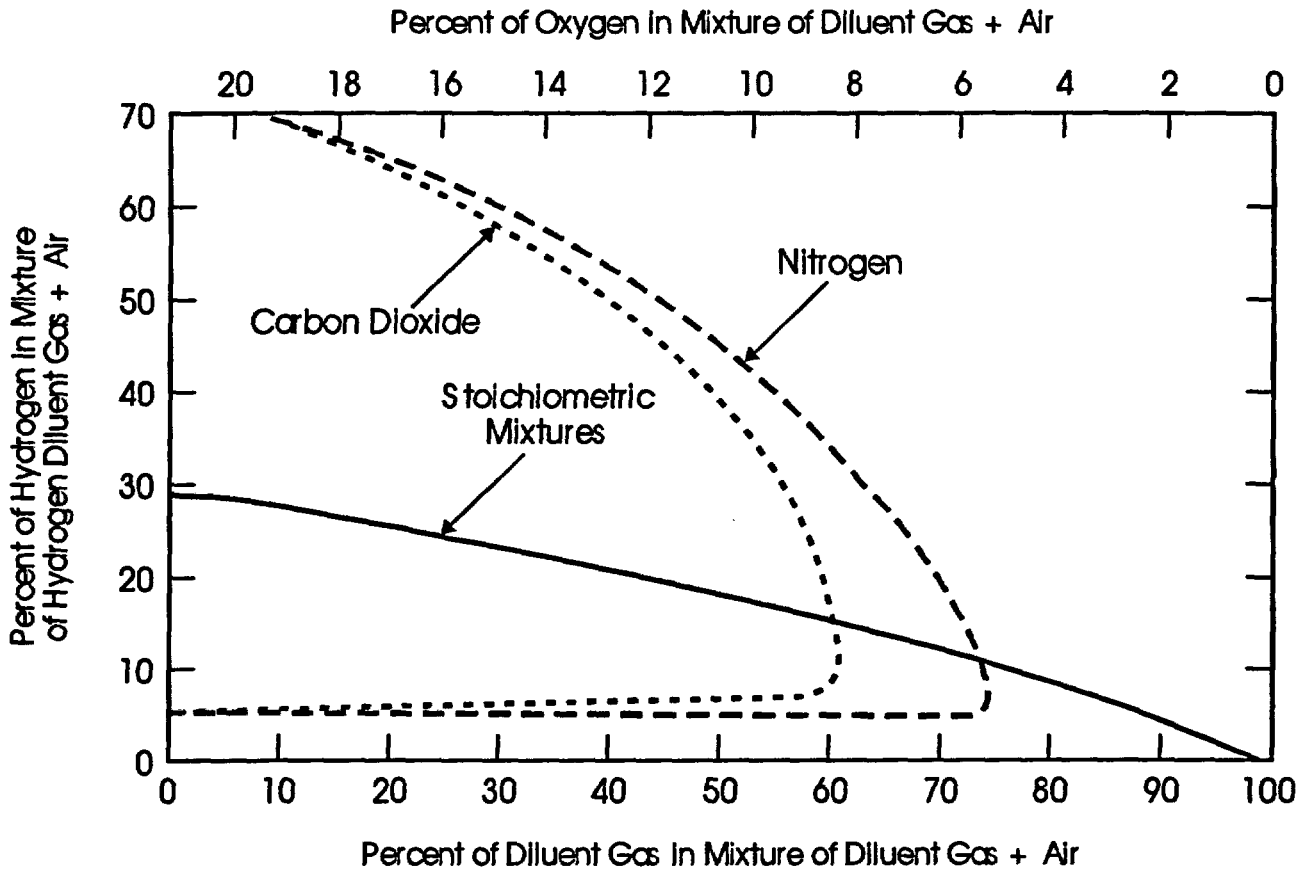

Figure 16-1 Flammability Limits of Hydrogen in Air Diluted with Carbon Dioxide and Nitrogen (Shapiro and Moffette, 1957)

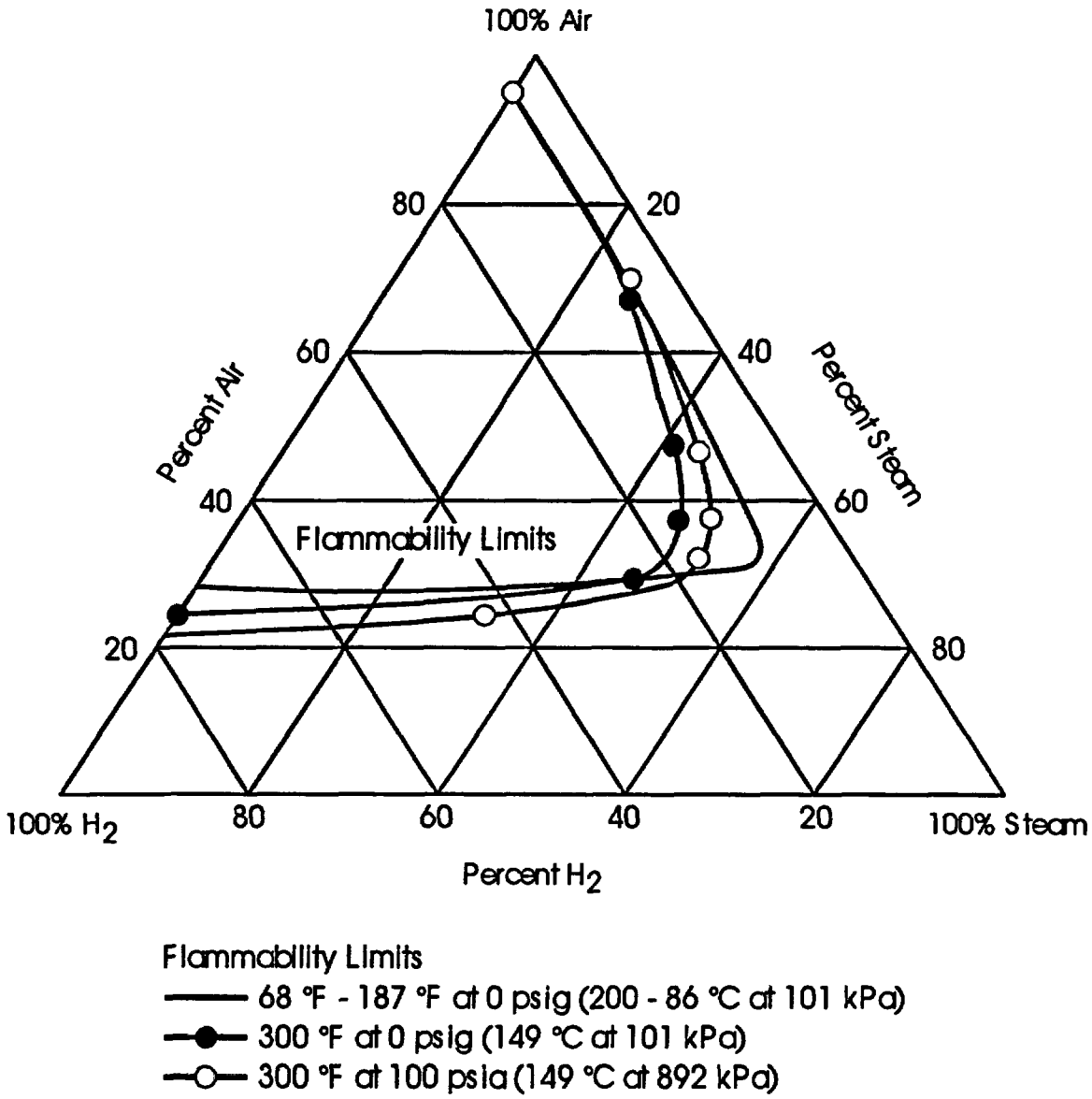

Figure 16-2 Flammability Limits of Hydrogen in Air-Stream Mixtures (Shapiro and Moffette, 1957)

(Shapiro and Moffette, 1957). Common sources of ignition are sparks from electrical equipment and the discharge of small static electric charges. In fact, the minimum energy required from a spark for ignition of a quiescent hydrogen air mixture is on the order of 10^{-4} J (10^{-7} Btu)—a very weak spark. Figure 16-3 (Drell and Belles, 1958) shows the ignition energy required as a function of hydrogen concentration. For a flammable mixture, the required ignition energy increases as the hydrogen concentration approaches the flammability limits. The addition of a diluent, such as steam, substantially increases the required ignition energy.

16.4.1 Battery as an Ignition Source

Given the discussion in the previous section, it is relatively easy to accept the fact that a battery can act as an ignition source for the hydrogen-air mixture that results from its own charging process. Since all functional vented batteries generate a stoichiometric mixture of hydrogen and oxygen gases during overcharging and expel them normally from the cell into the battery container, a potential always exists that these gases may explode. Normally, the battery case does not contain any ignition sources, but several abnormal possibilities do exist. One is the internal short-circuiting of a relatively dry cell in overcharging, resulting in an explosion inside the cell with a subsequent ejection of flames into the battery case. A second and more likely source of ignition may exist at an improperly maintained cell terminal, as a result of the high temperatures generated during high-rate discharge. A third source of ignition may occur at the site of stray leakage currents.

16.4.2 Control of Hydrogen Gas Combustion

An NPP can effectively control a flammable gas-oxidant mixture by reducing the concentration of oxidant or by adding an inert constituent to the mixture. Both processes can be explained most easily by referring to a flammability diagram. Figure 16-4 (NFPA 69, 1997 Edition) for example, shows a typical flammability diagram representing a mixture of combustible gas , an inert gas, (nitrogen), and an oxidant, (oxygen), at a given temperature and pressure. A mixture of air (79-percent N_2 and 21-percent O_2, by volume) and combustible gas is represented by line DABE. A given mixture of combustible gas and air, whether ignitable or not, is specified by some point on this line. Point A indicates the UFL of this mixture, while point B represent its LFL. Point C represents the limiting oxidant concentration to prevent ignition; any mixture containing less oxygen cannot be ignited. Any point within the area bounded by curve FBCAG is in the flammable range and can be ignited. Any mixture of oxygen and combustible gas alone (i.e., without any nitrogen) is represented by the left-hand side of the triangle. Any mixture of nitrogen and combustible gas alone (i.e., no oxygen present) is represented by the right-hand side of the triangle.

NPPs rely on several simple but extremely important methods to prevent hydrogen combustion in battery rooms. First, the rooms are well-ventilated to prevent excessive hydrogen buildup. The battery room ventilation system in NPPs typically limits hydrogen concentration to less than 2-percent of the total volume of the room and maintains a constant temperature of 25 °C (77 °F). The air flow rate is approximately 10 air changes per hour. As an additional precaution, no open flame or smoking is allowed in the proximity of the battery room. Also, any work in the room must be performed with non-sparking tools made of brass, aluminum, or wood (Linden, 1994).

To date, there have been no major accidents involving hydrogen gas in the battery rooms at NPPs (NUREG/CR-2726). However, in other (non-nuclear) industries, there have been instances of

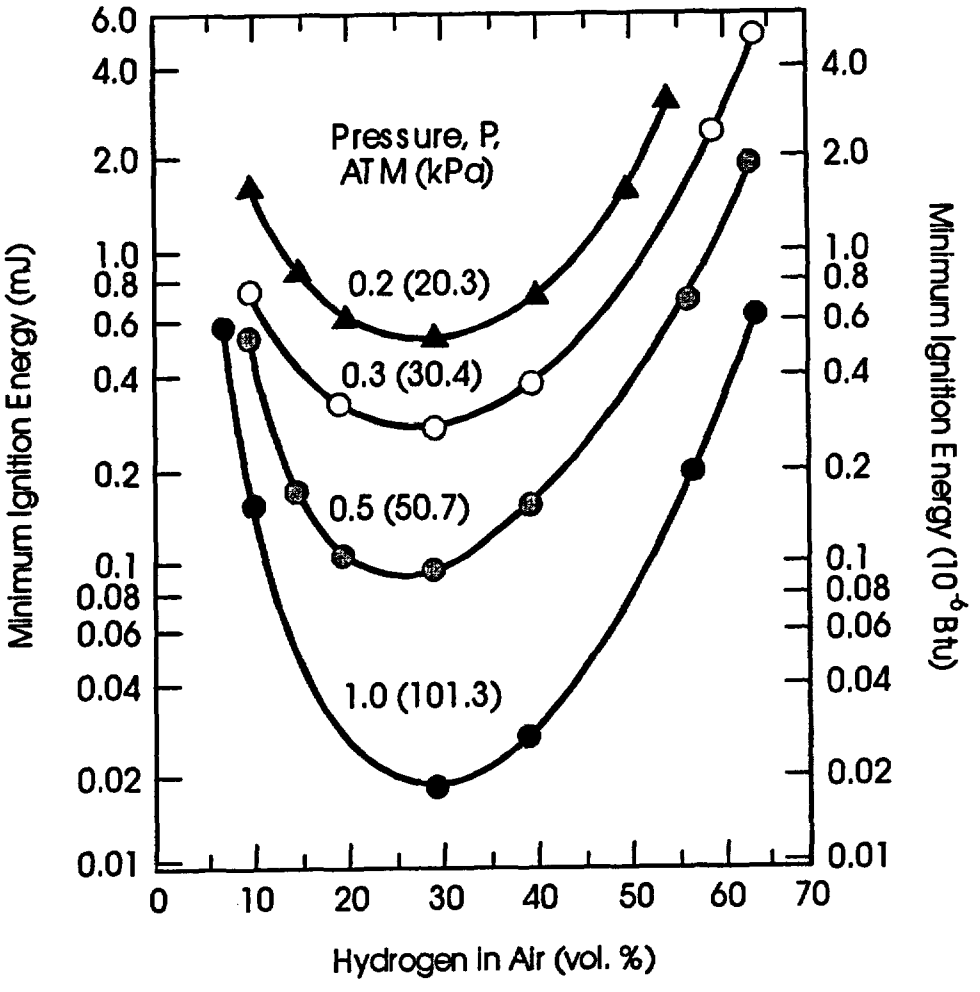

Figure 16-3 Spark Ignition Energies for Dry Hydrogen-Air Mixtures (Drell and Belles, 1958)

Figure 16-4 Typical Flammability Diagram
(NFPA 69, 1997 Edition)
(Waiting for copyright permission)

hydrogen explosions reported in battery charging areas ranging in size from submarine battery rooms to uninterruptible power supply (UPS) battery rooms where batteries create a real problem during periods of high recharge.

On March 20, 2001, a hydrogen explosion occurred in the UPS/battery room of a large computer data center in Sacramento, California ("Explosion in Rancho Cordova," 2001). The explosion blew a 400+ ft^2 hole in the roof, collapsed numerous walls and ceilings throughout the data center, and significantly damaged a large portion of the 50,000 ft^2 building.

16.5 Fire Protection Code Requirements for Battery Rooms

Regarding battery room fire protection for NPPs, Regulatory Guide (RG) 1.189 requires that battery rooms should be separated from each other and other areas of the plant by barriers having a minimum fire rating of 3 hours, inclusive of all penetrations and openings. RG 1.189 also requires that ignition sources (such as the DC switchgear room and inverters should not be located in batteries rooms. In addition, RG 1.189 recommends that automatic fire detection should be provided to alarm and annunciate in the control room and alarm locally. Ventilation systems in the battery rooms should also be capable of maintaining the hydrogen gas concentration well below 2-percent. Loss of ventilation should be alarmed in the control room and standpipe, and a hose station and portable fire extinguishers should be readily available outside the room.

Similar to RG 1.189, Section E2.12 of NFPA 805, "Performance-Based Standard for Fire Protection for Light Water Reactor Electric Generating Plants," 2001 Edition recommends that battery rooms should be separated from adjacent areas by fire-rated barriers. It also recommends that battery rooms should be ventilated to limit the concentration of hydrogen gas to 1-percent by volume in accordance with NFPA 69, "Standard on Explosion Prevention Systems." In addition, NFPA 805 requires that direct current switchgear and inverters should not be located in battery rooms. For detailed information, refer to IEEE-484, "Recommended Practice for Installation Design and Installation of Vented Lead-Acid Batteries for Stationary Applications".

In similar fashion, Section 8.7 of NFPA 804, "Standard for Fire Protection for Advanced Light Water Reactor Electric Generating Plants," 2001 Edition recommends that battery rooms should be protected against fires and explosion, and that ventilation should be provided to limit the concentration of hydrogen to 2-percent by volume. It also recommends that battery rooms should be separated from other areas of the plant by fire barriers having a 1-hour minimum rating and direct current switchgear and inverters should not be located in battery rooms.

Finally, Section 3-4 of NFPA 801, "Standard for Fire Protection for Facilities Handling Radioactive Materials," 2003 Edition, provides additional guidance for battery rooms, stating that "the facility shall be subdivided into separate fire areas as determined by the fire hazards analysis for the purpose of limiting the spread of fire, protecting personnel, and limiting the consequential damage to the facility. Fire areas shall be separated from each other by barriers with fire resistance commensurate with the potential fire severity. " Specifically, Section A-3-4 of NFPA 801 recommends that battery rooms should be separated by fire barriers having a 3-hour minimum rating. It also recommends that electrical equipment, such as the switchgear and relay rooms should be located in separate fire areas.

NFPA 70E, "Standard for Electrical Safety Requirements for Employee Workshops," 2000 Edition contains additional requirements for vented-type batteries, which require ventilation to limit hydrogen gas concentration exceeding 1-percent by volume. Similar requirements exist valve-regulated lead-acid (VRLA) storage batteries.

16.6 Method of Calculating the Rate of Hydrogen Generation in Battery Rooms

As previously explained, hydrogen gas is primarily generated in battery rooms as a result of battery overcharge. The generation of hydrogen is particularly important because of its rapid production rate and high flammability. A hydrogen-rich environment could accumulate in a battery room if the ventilation flow through the space is completely stopped or other events allow hydrogen accumulation. The formation of flammable fuel (hydrogen)/oxidant mixtures within a battery room can lead to premixed flame propagation in the form of fire and explosion events, which can cause failure of the structures, ventilation systems, power systems, and monitoring systems.

Significant amounts of hydrogen gas is liberated only when the battery approaches full charge. The maximum hydrogen evolution rate is 7.56×10^{-6} m^3 (0.000267 ft^3) per minute per charging ampere per cell at 25 °C (77 °F) and 1-atmosphere (Yuasa, Inc., 2000).

The method to calculate the amount of hydrogen produced from batteries in an enclosure is excerpted from the appendix to Section 58.00 of the Yuasa Catalog (2000). This method considers an antimony alloy-type (flat plate, tubular, or Manchex) battery at a point where it is nearing its end of life, or equalizing charge at 2.33 VPC (volts per cell).

The rate of hydrogen generation from a battery can be approximated using the following equation (Yuasa, Inc., 2000):

$$H_{gen} = \frac{F_C}{1000} \frac{A_H}{100} K N \qquad (16\text{-}1)$$

Where:

H_{gen} = hydrogen gas generation, ft^3/min
F_C = float current per 100 AH (temperature compensated) in milliamperes
A_H = ampere hours (nominal 8 hour)
K = constant - 1 AH = 0.000267 ft^3
N = number of cells

Table 16-2 summarizes the float current (F_C) demand of fully charged stationary lead-acid cells.

16.7 Method of Calculating Flammable Gas and Vapor Concentration Buildup in Enclosed Spaces

The minimum and maximum concentration of combustible material in a homogeneous mixture with a gaseous oxidizer that will propagate a flame is called flammable limits.

Upper and Lower Flammability Limits are the concentration of fuel in air in which a premixed flame can propagate.

A deflagration is possible if a gases concentration rises above its LFL. A detonation can occur if the velocity of a propagation of a combustion zone is greater than the speed of sound in the unreacted medium. For a detonation pressure rises are estimated as 2 to 4 times that of a deflagration.

Table 16-2. Float Current Demand for a Stationary Battery			
Charge Voltage (VPC)	Float Current (F_c) milliamperes per 100 AH @ 8 hour rate		
	Antimony		Calcium
	New	Old	
2.15	15	60	-
2.17	19	80	4
2.20	26	105	6
2.23	37	150	8
2.25	45	185	11
2.27	60	230	12
2.33	120	450	24
2.37	195	700	38
2.41	300	1,100	58
Note: The above values apply when the electrolyte temperature is 25 °C (77 °F). The values double for every 8 °C (15 °F) of temperature rise. If the temperature drops, the current value is halved for every 8 °C (15 °F) decrease. Antimony ranges indicate current increases attributable to cell aging.			

Deflagrations are characterized by slow subsonic propagation of a flame front, and slow but uniform rise in the pressure and temperature of the gas by the heat released from the combustion.

A detonation produces a shock wave driven and sustained by the chemical energy released from the chemical reaction. The shock wave and the reaction propagate together in the unburned gas at a speed which exceeds that of sound in the unburned medium, i.e., of the order of 1,500 to 2,000 m/sec (Fardis et al., 1983). The shock front is characterized by an abrupt increase in pressure, temperature, and density of the gas, and by the net forward movement of the gas particles. Shock reflection produces a large pressure on the wall (e.g., 2 to 4 times the incident pressures for a deflagration), and generates a purely mechanical wave which propagates inward in the already burnt gas until interacts with another wave produced by the reflection elsewhere.

The volume gas or vapor for deflagration is give by the following expression:

$$V_{def} = \frac{V}{LFL} \qquad (16\text{-}2)$$

Where:

V_{def} = volume of gas vapor for deflagration (ft^3)
V = volume of the enclosure (ft^3)
LFL = lower flammability of gas or vapor (percent-volume)

16.8 Method of Calculating Flammable Gas and Vapor Concentration Buildup Time in Enclosed Spaces

NFPA 69, "Standard on Explosion Prevention Systems," provides a method to calculate the time to buildup of combustible concentration of a flammable gas in enclosed area.

If a constant source of flammable gas is introduced into an enclosed volume, the buildup of flammable gas concentration is given by the following equation:

$$C = \frac{G}{Q}\left(1 - e^{-KN}\right) \qquad (16\text{-}3)$$

Where:

C = gas concentration by volume
G = flammable/combustible gas discharge rate (ft^3/min)
Q = volume of air in enclosure (ft^3/min)
K = mixing efficiency factor (constant)
N = number of theoretical air changes

Equation (16-3) can be rewritten into a more convenient logarithmic form:

$$\ln\left(1 - \frac{CQ}{G}\right) = -KN \qquad (16\text{-}4)$$

In perfect conditions, K = 1.0, Table 16-3 lists mixing efficiency factor (K) for certain conditions.

Table 16-3. Mixing Efficiency for Various Ventilation Arrangements

Method of Supplying	Efficiency K Values	
	Signal Exhaust Opening	Multiple Exhaust Opening
No Positive Supply		
Infiltration through cracks	0.2	0.3
open doors, or windows	0.2	0.4

Table 16-3. Mixing Efficiency for Various Ventilation Arrangements (continued)		
Method of Supplying	Efficiency K Values	
	Signal Exhaust Opening	Multiple Exhaust Opening
Forced Air Supply		
Grills and registers	0.3	0.5
Diffusers	0.5	0.7
Perforated ceiling	0.8	0.9

16.9 Assumptions and Limitations

The methods discussed in this chapter are subject to several assumptions and limitations.

(1) Hydrogen gas is primarily generated in battery rooms as a result of battery overcharge.

(2) The generation of hydrogen environment could occur if the ventilation flow through the vapor space is completely stopped or other events allow hydrogen accumulation.

(3) This method assumes that significant amounts of hydrogen is gas liberated only when the battery approaches full charge.

(4) The calculations will produce a first order approximation.

(5) The battery hydrogen generation equation is based on one specific vendors recommendations.

16.10 Required Input for Spreadsheet Calculations

The user must obtain the following data before attempting a calculation with the spreadsheet.

(1) charge voltage (vpc)

(2) ampere Hours

(3) number of cells

16.11 Cautions

(1) Make sure to input data in the correct units.

(2) Use (Battery_Room_Flammable_Gas_Conc.xls) spreadsheet on the CD-ROM for calculations.

16.12 Summary

(1) Adequate ventilation is the most common form of fire prevention/protection in battery rooms. Ventilation must be adequate to prevent hydrogen gas from exceeding a concentration 2-percent by volume, and to ensure that pockets of trapped hydrogen gas do not develop (particularly at the ceiling).

(2) The exhaust air outlets from the battery room shall be located separately so that a hazardous concentration of the exhausted air cannot enter or be drawn into the fresh air intakes of environmental air handling systems.

(3) Building and fire codes require spill containment systems for battery installations that contain electrolyte.

(4) NPP should maintain an ambient temperature of 23 to 26 °C (72 to 78 °F) in battery rooms.

(5) To extinguish a fire in a battery room containing lead-acid batteries, use CO_2, fire protection foam, or dry chemical extinguishing media. Do not discharge the extinguisher directly onto the battery. The resulting thermal shock may cause cracking of the battery case and/or cover.

(6) In case of fire shut off power, if batteries are on charge. Use a positive-pressure, self-contained breathing apparatus. Remember that water applied to an electrolyte generates heat and causes it to splatter. Wear acid-resistant clothing.

16.13 References

Drell, I.L., and F.E. Belles, "Survey of Hydrogen Combustion Properties," Technical Note NACA R 1383, National Advisory Committee for Aeronautics (NACA), Washington, DC, 1958.

"Explosion in Rancho Cordova," Press Release, Sacramento Metropolitan Fire District, March 20, 2001, available at http://www.smfd.ca.gov.

Fardis, M.N., A. Nacar, and M.A. Delichatsios, "R/C Containment Safety Under Hydrogen Detonation," *Journal of Structural Engineering*, Volume 109, pp. 2511–2527, 1983.

IEEE-484, "Recommended Practice for Installation Design and Installation of Vented Lead-Acid Batteries for Stationary Applications," The Institute of Electrical and Electronics Engineers, New York.

Linden, D., Editor-in-Chief, *Handbook of Batteries*, 2nd Edition, McGraw-Hill, Inc., New York, 1994.

NFPA 69, "Standard on Explosion Prevention Systems," 1997 Edition, National Fire Protection Association, Quincy, Massachusetts.

NFPA 70E, "Standard for Electrical Safety Requirements for Employee Workplaces," 2000 Edition, National Fire Protection Association, Quincy, Massachusetts.

NFPA 801, "Standard for Fire Protection for Facilities Handling Radioactive Materials," 1998 Edition, National Fire Protection Association, Quincy, Massachusetts.

NFPA 804, "Standard for Fire Protection for Advanced Light Water Reactor Electric Generating Plants," 2001 Edition, National Fire Protection Association, Quincy, Massachusetts.

NFPA 805, "Performance-Based Standard for Fire Protection for Light Water Reactor Electric Generating Plants," 2001 Edition, National Fire Protection Association, Quincy, Massachusetts.

Nuclear Regulatory Commission (U.S.) (NRC). NUREG/CR-2726, "Light Water Reactor Hydrogen Manual." NRC: Washington, D.C. August 1983.

Nuclear Regulatory Commission (U.S.) (NRC). NUREG/CR-6042, Rev. 2, "Perspective on Reactor Safety," NRC Washington, DC, March 2002.

Nuclear Regulatory Commission (U.S.) (NRC). Regulatory Guide 1.189, "Fire Protection for Operating Nuclear Power Plants," NRC Washington, DC, April 2001.

Shaprio, Z.M., and T.R. Moffette, "Hydrogen Flammability Data and Application to PWR Loss-of-Coolant Accident," WAPD-SC-545, Bettis Plant, September 1957.

Yuasa, Inc., *Safety Storage, Installation, Operation, and Maintenance Manual*, Section 58.00, Heritage™ Series, Flooded Lead-Acid Batteries, 2000.

16.14 Problems

Example Problem 16.14-1

Problem Statement
Assume a 60-cell GT-41 (3,730 Ampere-hour) battery near the end of its life, on equalize at 2.33 VPC at an electrolyte temperature of 92 °F (33 °C). Estimate the rate of hydrogen generation (in cubic feet per minute).

Spreadsheet Calculations

CHAPTER 16 - METHOD OF PREDICTING HYDROGEN GAS GENERATION RATE IN BATTERY ROOMS

The following calculations estimate the hydrogen gas generation rate in battery rooms.
Parameters should be specified ONLY IN THE YELLOW INPUT PARAMETER BOXES.
All subsequent output values are calculated by the spreadsheet and based on values specified in the input parameters. This spreadsheet is protected and secure to avoid errors due to a wrong entry in a cell(s).
The chapter in the guide should be read before an analysis is made.

INPUT PARAMETERS

BATTERY INFORMATION

Float Current (F_C)	450	mA per 100 A_H @ 8-hr. rate
Ampere Hours (A_H)	3730.00	Ampere hours
Number of Cells (N)	60.00	
Constant (K)	0.000267	ft^3

Float Current Demand of Fully Charged Stationary Lead-Acid Cells

Reference: Yuasa, Inc., Safety Storage, Installation, Operation, and Maintenance Manual, Section 58.00, Hertnce Series, Flooded Lead-Acid Batteries, 2000.

New Antimony — F_C (milliamperes per 100 A_H @ 8-hr. rate)

Charge Voltage (VPC)	Antimony New
2.15	15
2.17	19
2.20	26
2.23	37
2.25	45
2.27	60
2.33	120
2.37	195
2.41	300

Select Charge Current Value

Scroll to desired value then Click on selection

Old Antimony — F_C (milliamperes per 100 A_H @ 8-hr. rate)

Charge Voltage (VPC)	Antimony Old
2.15	60
2.17	80
2.20	105
2.23	150
2.25	185
2.27	230
2.33	450
2.37	700
2.41	1100

Select Charge Current Value

2.33

Scroll to desired value then Click on selection

Calcium — F_C (milliamperes per 100 A_H @ 8-hr. rate)

Charge Voltage (VPC)	Antimony Calcium
2.15	
2.17	4
2.20	6
2.23	8
2.25	11
2.27	12
2.33	24
2.37	38
2.41	58

Select Charge Current Value

Scroll to desired value then Click on selection

METHOD OF YUSHA, INC.

Reference: Yuasa, Inc., Heritage Series, Appendix, 2000, Page 49-50.

Estimating Hydrogen Gas Generation Rate

$H_{gen} = F_C/1000 \times A_H/100 \times K \times N$

Where
- H_{gen} = hydrogen gas generation rate (ft^3/min)
- F_C = float current (mA per 100 A_H @ 8-hr. rate)
- A_H = ampere hours
- K = constant
- N = number of cells

H_{gen} = 0.538 ft^3/min **ANSWER**

NOTE

The above calculations are based on method presented in the Yuasa, Inc., Technical Manual Section 58.00, Heritage Series, Flooded Lead-Acid Batteries, 2000.
Calculations are based on certain assumptions and have inherent limitations. The results of such calculations may or may not have reasonable predictive capabilities for a given situation, and should only be interpreted by an informed user.
Although each calculation in the spreadsheet has been verified with the results of hand calculation, there is no absolute guarantee of the accuracy of these calculations.
Any questions, comments, concerns, and suggestions, or to report an error(s) in the spreadsheet, please send an email to nxi@nrc.gov.

NRR

Office of Nuclear Reactor Regulation

This page intentionally left blank.

Example Problem 16-2

Problem Statement

Consider a enclosure (10ft x 10ft x 10ft high) 1000 ft^3 (28 m^3) in turbine generator area of a nuclear facility in which hydrogen gas is accumulated. Calculate the concentration of hydrogen gas by volume reaching its LFL of 4-percent.

Spreadsheet Calculations

CHAPTER 16 - METHOD OF ESTIMATING FLAMMABLE GAS AND VAPOR CONCENTRATION BUILDUP IN ENCLOSED SPACES

The following calculations estimate the flammable concentration of gases and vapors in enclosures.
Parameters should be specified ONLY IN THE YELLOW INPUT PARAMETER BOXES.
All subsequent output values are calculated by the spreadsheet and based on values specified in the input parameters. This spreadsheet is protected and secure to avoid errors due to a wrong entry in a cell(s).
The chapter in the guide should be read before an analysis is made.

INPUT PARAMETERS

Lower Flammability Limit of Flammable Gas or Vapor (LFL)	4.00	Percent 0.040
Compartment Width (w_c)	10.00	ft
Compartment Length (l_c)	10.00	ft
Compartment Height (h_c)	10.00	ft
Volume of Enclosure (V)	1000	ft^3

LOWER FLAMMABILITY DATA FOR GASES AND VAPORS

Gases and Vapors	LFL Volume-Percent
Hydrogen	4.00
Carbon Monoxide	12.50
Methane	5.00
Ethane	3.00
Propane	2.10
n-Butane	1.80
n-Pentane	1.40
n-Hexane	1.20
n-Heptane	1.05
n-Octane	0.95
n-Nonane	0.85
n-Decane	0.75
Ethene	2.70
Propene	2.40
Butene-1	1.70
Acetylene	2.50
Methanol	6.70
Ethanol	3.30
n-Propanol	2.20
Acetone	2.60
Methyl Ethyl Ketone	1.90
Diethyl Ketone	1.60
Benzene	1.30

Select Gas or Vapor
Hydrogen

Scroll to desired gas or vapor then Click on selection, *making sure the gas or vapor is highlighted in the box.*

Reference: *SFPE Handbook of Fire Protection Engineering*, 2nd Edition, 1995, Page 2-150.

ESTIMATING FLAMMABLE CONCENTRATION OF GASES USING LIMITS OF FLAMMABILITY

Volume of Gas or Vapor for Deflagration = V x LFL

Where V = volume of enclosure (ft^3)
LFL = lower flammability of a gas or vapor (percent-volume)

Volume of Gas or Vapor for Deflagration = 40 ft^3 **ANSWER**

NOTE

The above calculations are based on principles developed in the SFPE Handbook of Fire Protection Engineering, 2nd Edition, 1995.

Calculations are based on certain assumptions and have inherent limitations. The results of such calculations may or may not have reasonable predictive capabilities for a given situation, and should only be interpreted by an informed user.

Although each calculation in the spreadsheet has been verified with the results of hand calculation, there is no absolute guarantee of the accuracy of these calculations.

Any questions, comments, concerns, and suggestions, or to report an error(s) in the spreadsheet, please send an email to nxd@nrc.gov.

NRR

Office of Nuclear Reactor Regulation

This page intentionally left blank.

Example Problem 16-3

Assume a leak of 100 ft^3/min of a 15-percent of hydrogen gas/air mixture in a compartment, 29 ft x 15 ft x 12 ft high (w_c x l_c x h_c). How long would it take to reach a hydrogen concentration of 2 percent throughout the enclosure, assume infiltration through compartment leaks.

Spreadsheet Calculations

CHAPTER 16 - METHOD OF PREDICTING FLAMMABLE GAS AND VAPOR CONCENTRATION BUILDUP TIME IN ENCLOSED SPACES

The following calculations estimate the combustible gas concentration buildup time enclosed compartments.
Parameters should be specified ONLY IN THE YELLOW INPUT PARAMETER BOXES.
All subsequent output values are calculated by the spreadsheet and based on values specified in the input parameters. This spreadsheet is protected and secure to avoid errors due to a wrong entry in a cell(s).
The chapter in the guide should be read before an analysis is made.

INPUT PARAMETERS

COMPARTMENT INFORMATION HYDROGEN LEAK INFORMATION

Compartment Width (w_c)	29.00	ft	
Compartment Length (l_c)	15.00	ft	
Compartment Height (h_c)	12.00	ft	
Leakage Rate	100.00	ft^3/min	
Percent of Combustible Gas/Air Mixture	15.00	percent	0.15
Combustible Gas Concentration (C)	2.00	percent	0.02
Mixing Efficiency Factor (K)	0.2		

Mixing Efficiency (K Values) for Various Ventilation Arrangements

Reference: NFPA 69, "Standard on Explosion Prevention Systems," 1997 Edition.

Infiltration Through Cracks

	K
Single Exhaust Opening	0.20
Multiple Exhaust Openings	0.30

Select Ventilation Arrangement

0.2

Scroll to desired arrangement then Click on selection

Open Door, or Windows

	K
Single Exhaust Opening	0.2
Multiple Exhaust Openings	0.4

Select Ventilation Arrangement

Scroll to desired arrangement then Click on selection

Grill and Registers

	K
Single Exhaust Opening	0.3
Multiple Exhaust Openings	0.5

Select Ventilation Arrangement

Scroll to desired arrangement then Click on selection

Diffusers

	K
Single Exhaust Opening	0.5
Multiple Exhaust Openings	0.7

Select Ventilation Arrangement

Scroll to desired arrangement then Click on selection

Perforated Ceiling

	K
Single Exhaust Opening	0.8
Multiple Exhaust Openings	0.9

METHOD OF NFPA 69, STANDARD ON EXPLOSION PREVENTION SYSTEMS

Reference: NFPA 69, "Standard on Explosion Prevention Systems, 1997 Edition, Appendix D.

Estimating Number of Theoretical Air Changes
$\ln(1 - (CQ/G)) = -KN$

Where
C = combustible gas concentration
Q = volume of air in enclosure (ft^3/min)
G = combustible gas leakage rate (ft^3/min)
K = mixing efficiency factor (constant)
N = number of theoretical air changes

Q = volume of air in enclosure
Q = 85.00 ft^3/min

G = combustible gas leakage rate
G = 15 (ft^3/min)

N = number of theoretical air changes
ln (1 - (CQ/G)) = - KN

N = - (ln(1 - (CQ/G)))/K

N = 0.60

Estimating Combustible Gas Concentration Buildup Time

t = (V/Leakage rate) * N

Where V = compartment volume (ft^3)
leakage rate (ft^3/min)
N = number of theoretical air changes

Volume of Compartment = V = w_c x l_c x h_c (ft^3)
V = 5220.00 ft^3

t = 31.39 minute ANSWER

NOTE
The above calculations are based on method presented in the NFPA 69, "Standard on Explosion Prevention Systems, 1997 Edition.
Calculations are based on certain assumptions and have inherent limitations. The results of such calculations may or may not have reasonable predictive capabilities for a given situation, and should only be interpreted by an informed user.
Although each calculation in the spreadsheet has been verified with the results of hand calculation, there is no absolute guarantee of the accuracy of these calculations.
Any questions, comments, concerns, and suggestions, or to report an error(s) in the spreadsheet, please send an email to nxi@nrc.gov.

NRR
Office of Nuclear Reactor Regulation

This page intentionally left blank.

CHAPTER 17. CALCULATING THE FIRE RESISTANCE OF STRUCTURAL STEEL MEMBERS

17.1 Objectives

This chapter has the following objectives:

- Explain the testing procedures fire resistance of for structural steel members fire protection.
- Describe the expected failure criteria for structural steel members.
- Explain how to calculate the fire resistance (failure time) of protected and unprotected structural steel members.

17.2 Introduction

The fire resistance of structures is important in protecting life and property against the hazards of fires. Building codes regulate the fire resistance of structures in a number of ways, including requirements for fire resistance classifications based on such factors as building size, location, and occupancy.

In the United States, fire resistance classifications (fire ratings) of floors, roofs, beams, partitions walls, and columns are based on the results of the "Standard Test Method for Fire Tests of Building Construction and Materials" as defined in ASTM E119. This standard specifies that test specimens must be "truly representative of the design, material, and workmanship for which classification is desired." Testing laboratories throughout North America use gas burners to heat the furnace in such a manner that the temperature inside the furnace follows the time-temperature curve illustrated in Figure 17-1. Table 17-1 identified the points on this curve that determine its characteristics.

Table 17-1. Standard Time-Temperature Curve Points

Time	Temperature °C (°F)
5 min	38 (100)
10 min	704 (1,300)
30 min	843 (1,550)
1 hr	927 (1,700)
2 hr	1,010 (1,850)
4 hr	1,093 (2,000)
8 hr	1,260 (2,300)

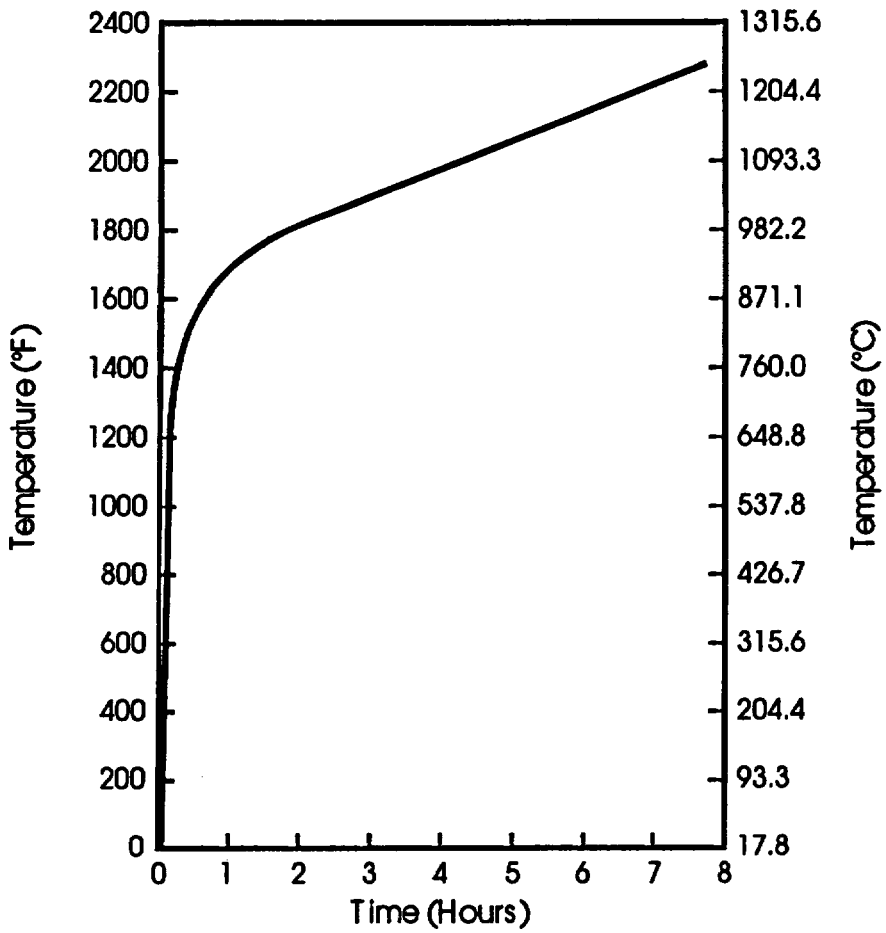

Figure 17-1 Standard Time-Temperature Curve (ASTM E-119)

The floors, roofs, beams, partitions walls, and columns being tested must remain structurally intact and limit heat transmission to the unexposed surfaces. Moreover, for fire barriers such as walls the average temperature increase on the unexposed surfaces cannot exceed 121 °C (250 °F) and cotton waste on the unexposed surface cannot be ignited. Furnace temperature readings are taken as an average of at least 8 thermocouples at intervals not exceeding 1 minute during the test period.

A hose stream test is also required for walls and partitions with a rating of at least 1-hour. This test can be conducted immediately after the fire exposure test or, alternatively, it can be conducted on a duplicate sample after exposure to fire for half of the rating period, but not more than 1 hour. If openings develop that permit a projection of water beyond the unexposed surface, the test is considered a failure.

Load-bearing walls or partitions support a portion of the vertical (gravity) loads from a floor or roof. During fire test, such assemblies are not restrained on vertical edges and are loaded to the maximum design load for the test duration. Nonbearing walls or partitions are restrained on all four edges.

If structural steel members supporting floors or roofs are spaced more than 4 feet apart, the maximum temperature at any location cannot exceed 704 °C (1,300 °F) and average temperature cannot exceed 593 °C (1,100 °F) for the following scenarios:

(1) A restrained assembly with up to a 1-hour classification for the full period. For ratings greater than 1 hour, the temperature limitation applies for half the hourly rating, but not less than 1-hour.

(2) An unrestrained assembly cannot exceed the temperature criteria shown above for the full classification or rating period.

If steel structural members are 4 feet or less on center, the average temperature cannot exceed 593 °C (1,100 °F) for the following scenarios:

(1) A restrained assembly with up to a 1-hour classification for the full period. For ratings greater than 1 hour, the temperature limitation applies for half the hourly rating, but not less than 1 hour.

(2) An unrestrained assembly cannot exceed the temperature criteria shown above for the full classification period.

For steel floor or roof units with spans longer than those tested, the average temperature can not exceed 593 °C (1,100 °F) during the classification period.

Floors and roofs are loaded to the maximum design conditions for the classification period.

Columns are loaded to the full design stress and exposed on all four sides to the standard time-temperature curve. The columns must sustain the structural design load for the test period.

Where column protections are not required to carry any of the column load (e.g., the fire resistive covering on a steel column), an alternative column test method uses unloaded columns with the following pass-fail criteria:

(1) The average temperature increase cannot exceed 538 °C (1,000 °F).

(2) The maximum temperature increase of any thermocouple is 649 °C (1,200 °F).

Individual ratings for loaded beams can be established if the beams are tested as part of a floor assembly; however, the beams must sustain the applied load for the full classification period. The listing is applicable to beams with a weight to heated perimeter (W/D) ratio greater than or equal to that of the beam tested. This W/D ratio is the factor that allows the interpolation of coating thicknesses, where W is the weight (lb/ft of length) and D is the heated perimeter (inches) of the structural member.

17.3 Fire Resistance of Buildings

Buildings consist of various structural elements that have unique fire resistance ratings and belong to various combustibility groups. The capacity of a building to resist collapse during a fire, is called the fire resistance rating. It is characterized by the fire resistance of structural elements such as floor, roof, beams, partitions, fire walls or barriers, bearing walls, and columns. Figure 17-2 illustrates typical methods of protecting structural steel elements from fire. Light protection, using low-density material applied either to the profile of a section or in a box form is the most popular from an economic point of view. Massive protection, particularly concrete encasement, is used in special cases. External protections, referred to as complex protection, include such examples as box protection H-columns with core filling or very thick counter protection. Liquid filling is a special protection method, in which fire resistance is achieved by filling hollow steel members with water. This method is a less common but, an effective way of preventing rapid heating of hollow steel sections. However, a plumbing system is necessary to ensure that the water can flow by convection from member to member and to avoid excessive pressure when the water is heated.

It is important to distinction between the actual and required fire resistance ratings of a building. The actual rating of a building is determined by the minimum actual fire resistance rating and combustibility group of one of the building's structural elements. The required fire resistance rating of a building is standardized and understood to be the minimum rating that the building has to satisfy given safety requirements. This rating accounts for fire hazards involved in the production processes within the building, the purpose for which the building is intended, the area, the number of stories, and the presence of automatic fire detection and extinguishing systems.

17.4 Fire Resistance of Structural Members

The term fire resistance is used to denote the ability of a building component to resist the thermal insult of a standard rest fire. This rating is usually given in units of time, e.g., 1 hour, 3 hour, etc. The retention load-bearing capacities by structural members during a fire is very important. Buildings collapse when load-bearing members lose their load-bearing capacity.

The fire resistance of structural members is characterized by their fire resistance ratings, which are defined as the time elapsed from the start of the fire until the time the structure loses its load-

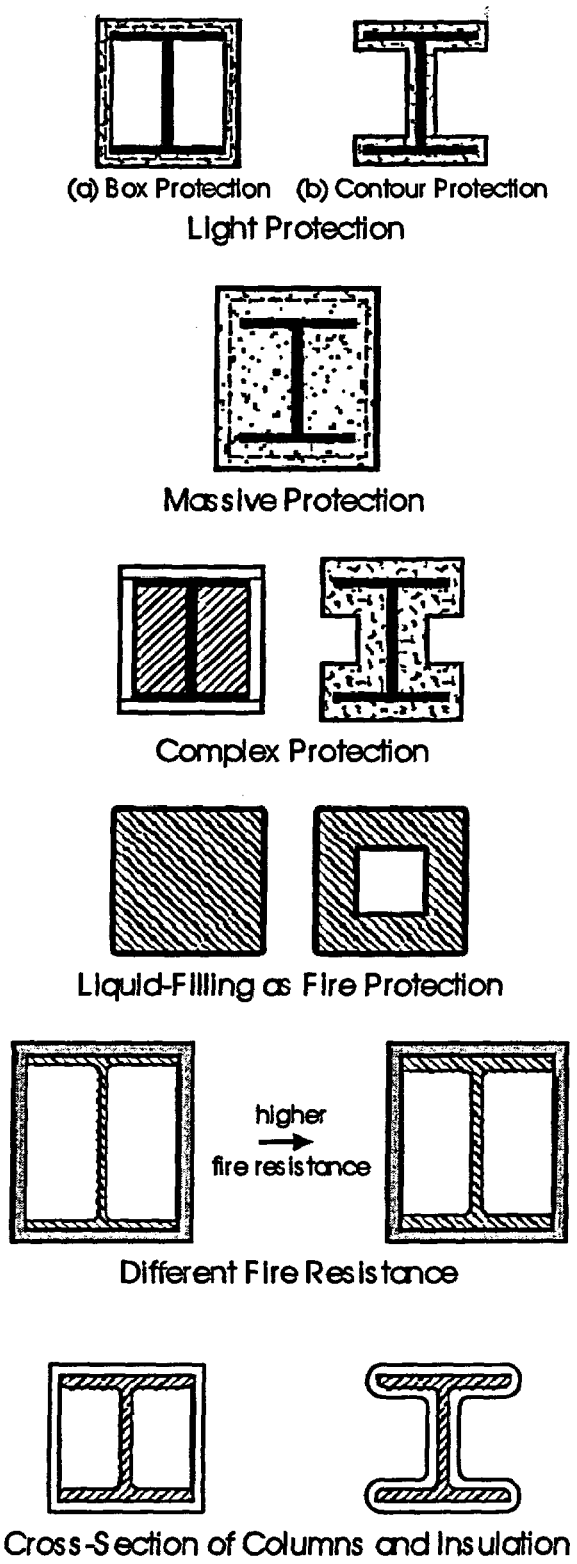

Figure 17-2 Typical Methods of Protecting Various Structural Steel Elements from Fire

bearing or protective capacity. The failure of structural members begins when they are heated to critical temperatures. The fire resistance ratings of structural members are determined either experimentally or by calculations. Experimental methods for determining the fire resistance of structural members have been standardized (e.g., ASTM E119).

17.4.1 Fire Resistance and Temperature Limits of Steel Elements

Steel is a non-combustible material, however, heat effects the material properties and strength of structural steel. For structural elements, the only criterion to be considered is the point where the thermal insult from the fire has weakened the member enough to allow structural collapse of the element.

The fire resistance or endurance, of steel elements varies greatly. The temperature limits for structural steel members are based on the criteria contained in ASTM E119. The maximum single point temperature in a steel beam, column, or girder is 649 °C (1,300 °F) and the allowable average temperature in these members is 530 °C (1,000 °F). Failure is assumed to occur if either the maximum single point temperature or average temperature is exceeded.

17.4.2 Fire Resistance and Temperature Limits of Reinforced Concrete Elements

The fire resistance or endurance of reinforced concrete floors, roofs, and walls is often governed by the criteria for the temperature increase of the unexposed surface, rather than by structural considerations. The ASTM E119 criteria for the temperature rise of the unexposed surface, referred to as heat transmission requirements, limit the increase to an average of 121 °C (250 °F) or a maximum at any one point of 163 °C (325 °F). The purpose of these criteria is to guard against ignition of combustibles on the non-fire side in contact with the fire barrier.

A classical method for estimating the maximum surface temperature reached by reinforced concrete elements is based on of the permanent color changes observed in concrete containing aggregates of siliceous or limestone rock after exposure to high temperatures. Such color changes depends upon the maximum temperature. The surface takes on a pink or red hue when exposed to temperatures of 300–600 °C (572–1,112 °F); dark grey, when exposed temperatures of 600–900 °C (1,112–1,652 °F); brown, when the maximum temperature reached 900–1,200 °C (1,652–2,192 °F); or yellow if the temperature exceeds 1,200 °C (2,192 °F) (Neville, 1975).

Table 17-2 summarizes the ASTM E119 temperature endpoint criteria for structural members. The endpoint temperatures are selected according to conservative estimates of the maximum allowable reduction in load-bearing capacity of the structural member, based on an average reduction in strength attributable to elevated temperatures.

17.5 Failure Criteria for Structural Steel Members

Structural members that are exposed to fire will ultimately fail if the fire is of sufficient duration and intensity. Failure can occur when the member collapses because it can no longer support the design load, or when the deflection is so severe that the member can no longer function in the capacity for it was intended. The failure results from major changes in the mechanical properties of steel, concrete, and other structural materials as they heat up. The ability of a building to remain stable during a fire is equated to the temperature increase in the exposed structural elements. This

is based on the fact that the mechanical properties of the structural elements deteriorate as the temperature of the structural materials increases to some critical level. The changes in material properties that are most significant to the performance of structural steel members include the yield strength, modulus of elasticity, and coefficient of thermal expansion. The critical level is generally defined as the temperature at which the yield strength of the material is reduced to the design strength and, therefore, the factor of safety approaches unity.

Table 17-2. Temperature Endpoint Criteria for Structural Members (ASTM E119)

Structural Member	Location	Maximum Temperature °C (°F)
Walls/Partitions (bearing and non-bearings)	Unexposed side	139 (250)
Steel Columns	Average	530 (1,000)
	Single point	649 (1,200)
Floor/Roof Assemblies and Loaded Beams	Unexposed side	139 (250)
	Steel beam (average)	593 (1,100)
	Steel beam (single point)	704 (1,300)
	Pre-stressing steel	426 (800)
	Reinforced steel	593 (1,100)
	Open-web steel joist	593 (1,100)
Steel Beams/Girders (not loaded)	Average	530 (1,000)
	Single point	649 (1,200)

17.6 Fire Walls and Fire Barriers Walls

NFPA 221, "Standard for Fire Walls and Fire Barrier Walls," contains design and construction requirements for fire walls and fire barriers. The basic difference between the two is that fire walls must remain stable and uncompromised throughout an uncontrolled fire (with sprinklers lacking or assumed to be ineffective), while a fire barrier is intended to help prevent the passage of fire *in conjunction with* other protective measures (such as sprinkler protection).

Fire walls and fire barriers are rated for the number of hours of fire exposure that they can withstand. Table 17-3 summarizes some rules of thumb to estimate the fire resistance ratings for walls based on some common construction materials.

Table 17-3. Fire Resistance of Walls		
Material	Thickness (inches) and Construction Details	Fire Resistance (Hours)
Brick	12, all materials	10
	8, sand and lime	7
	8, clay and shale	5
	8, concrete	6
	4, clay and shale	1¼
	4, concrete, sand, and lime	1½
Hollow partition tile	12, two 6-in. tiles	4
	12, unknown number of cells	3
	8, all tile arrangements	2
Concrete block	16 nominal, 15⅝ actual	4
	12 nominal. 11⅝ actual	3
	8 nominal, 7⅝ actual	1¾

A fire wall is defined as a wall that separates buildings or subdivides buildings and is intended to prevent the spread of fire, by providing fire resistance and structural stability. A fire barrier is a wall that extends to the roof or floor deck above and is intended to restrict the spread of fire by providing fire resistance.

In addition to proper structural design, other design considerations are required to maintain the integrity of the subdividing fire wall or fire barriers, as follows:

- routing of pipes, conduits, and cables to floor level to help prevent the fire wall from being damaged by collapse on either side
- fire-resistant penetration seals at pipes, conduits, cable trays, and HVAC penetrations
- fire doors for personnel or vehicle openings
- fire resistant exterior wing walls at the ends of the fire walls to prevent fire from spreading around its ends

- provision of a parapet, which consists of the fire wall penetrating the roof deck and extending above it

Some fire walls are designed to remain stable after the collapse of a building structure on either side in the event of an uncontrolled fire.

Fire walls must be designed for a minimum uniform lateral load of 5 pounds per square foot (psf) from either direction (applied perpendicular to the face of the wall). Where seismic loading governs, the design load may be considerably higher.

17.7 Fire Resistance Coatings for Structural Steel

Unprotected structural steel loses its strength at high temperatures and, therefore, must be protected from exposure to the heat generated by building fires. This protection, often referred to by the misnomer "fireproofing," insulates the steel from heat. As previously noted, the most common methods of insulating steel are encasement of the member, application of a surface treatment, or installation of a suspended ceiling as part of a floor-ceiling assembly capable of providing fire resistance. Additional methods include sheet steel membrane shields around members and box columns filled with liquid.

Encasement of structural steel members has been a common and satisfactory method of insulating steel to increase its fire resistance. In floor systems composed of reinforced concrete slabs supported by structural steel beams, the encasement can be placed within the floor. Figure 17-3 illustrates this old encasement technique. The major disadvantages of this procedure are the increased weight and cost, which are attributable to increased framework, concrete, and structural support. To reduce the weight and cost of encasement, surface treatment utilizing lath and plaster or gypsum board, or any of a variety of spray-on coatings have been developed, as shown in Figure 17-4. Sprayed-on mineral fiber coatings are widely used to protect structural steel. If applied correctly, such coatings provide excellent protection; however, the coating can easily be scraped off the member during construction or plant modification. Consequently, sprayed-on mineral coatings are suspect with regard to their effectiveness over long-term use.

Cementitious materials also have been used as sprayed-on coatings, despite the fact that they can spall during a fire and have experienced adhesion problems in actual use. Thus, effective application, complete coverage, and long-term maintenance are attributes that must be evaluated in considering the use of sprayed-on coatings.

Intumescent paints and coatings have also been used to increase the fire endurance of structural steel. These coatings swell when heated to form an insulation around the steel. They are primarily

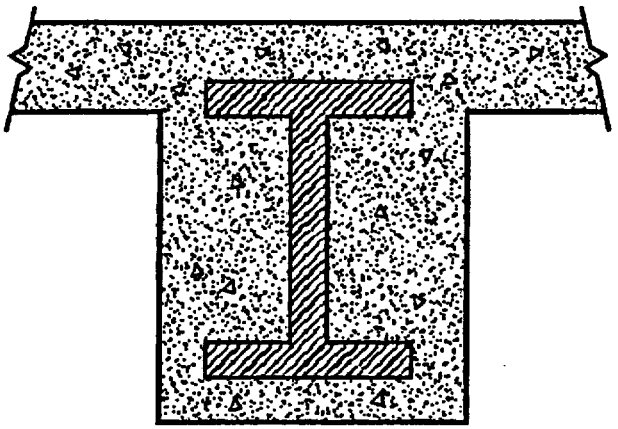

Figure 17-3 Encasement of a Steel Beam by Monolithic Casting of Concrete Around the Beam

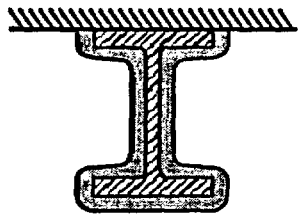

Beam

Spray-on Fire Proofing

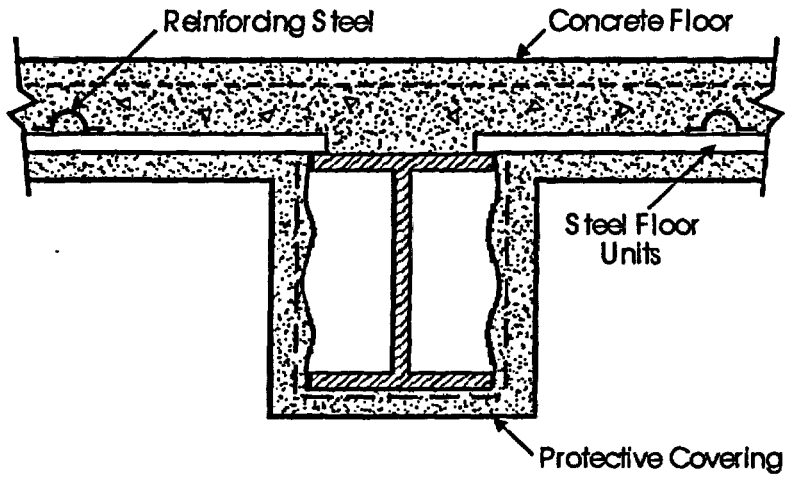

Furred Steel Beams with Non-combustible Protection

Figure 17-4 Spray-On Mineral Fiber and Noncombustible Protective Coatings

used for non-exposed steel subject to elevated temperatures, because prolonged exposure to flame can destroy the char coating.

17.8 Calculating Fire Resistance or Endurance

The traditional approach to structural fire protection is to specify the fire resistance or endurance ratings for construction classifications identified in the building codes. The individual fire resistance or endurance ratings are establish by subjecting various structural members and assemblies to the standard fire test (ASTM E119 or NFPA 251, "Standard Methods of Tests of Fire Endurance of Building Construction and Materials").

During the past three decades, a substantial amount of research has conducted to develop and validate computer models of the mechanical and thermal properties of structural members, as well as compartment fire behavior, heat transfer, and structural performance at elevated temperatures. These studies have resulted in more realistic predictions of structural behavior in fires than was possible with the traditional code and standard fire test procedures of the past.

As a result several empirically derived correlations are available to calculate the fire resistance of steel columns, beams, and trusses. The correlations are based on curve-fitting techniques using data gathered by performing the standard test numerous times on variations of a standard assembly. In some cases, a best-fit line has been drawn for the data point; in other cases, lines have been drawn conservatively estimate the fire resistance by connecting the two lowest points. Numerical methods are also available to estimate the temperature increase in steel structural elements. The equations in these methods are derived from simplified heat transfer approaches.

Compared to the traditional test approaches, modern calculation methods offer the advantages of economy and better predictability. These calculation methods calculate either (1) the fire resistance or endurance that would have been obtained in the standard fire test or (2) structural or thermal performance in an actual building fire compartment.

17.8.1 Equivalent Fire Resistance of Structural Steel

Fire testing of the structural steel, which has been ongoing for many years, has yielded substantial data and experience. The procedures described in the following subsections reflect the methods for calculating equivalent fire resistance. It should be noted that many of these calculation methods are obtained from test data. Consequently, one should be cautious when applying these methods to materials that have not been used in the tests that from the basis for the calculation methods. For example, the data for structural steel are based on testing of A7 and A36 structural steel, which have different mechanical properties at both normal and elevated temperatures than the high-strength steels that have become popular in recent years. Consequently, when we use the term structural steel for fire resistance calculations in this section, we mean A7 and A36 steels.

17.8.2 Steel Column (Unprotected)

In general, unprotected steel columns of small cross-sectional area, have a fire resistance of not more than 10–20 minutes (ASCE, 1992). However, heavier columns are capable of much better fire performance. Figure 17-2 illustrates typical sections of unprotected structural steel columns.

Based on theoretical and experimental studies, the following formulae have been developed for calculating the fire resistance of unprotected steel columns (Milke, 1995):

$$R = 10.3\left(\frac{W}{D}\right)^{0.7} \text{ for } \frac{W}{D} < 10 \qquad (17\text{-}1)$$

and

$$R = 8.3\left(\frac{W}{D}\right)^{0.8} \text{ for } \frac{W}{D} \geq 10 \qquad (17\text{-}2)$$

Where:

R = fire resistance time (minutes)
W = weight of steel column per linear foot (lb/ft)
D = heated perimeter (in) as shown in Figure 17-5

The fire resistance or endurance of structural steel columns can be improved by insulating the members. The next few subsection discuss the fire resistance of steel members protected by various insulation materials.

17.8.3 Steel Column (Protected with Gypsum Wallboard)

A common protective method is to box in steel columns using gypsum wallboard. Based on the accumulated fire-test results, the following empirical equation has been developed to determine resistance or endurance of steel columns protected by gypsum wallboard (Milke, 1995):

$$R = 130\left(\frac{h}{2}\frac{W'}{D}\right)^{0.75} \qquad (17\text{-}3)$$

Where:

R = fire resistance time (minutes)
h = thickness of protection (in)
W' = weight of steel column and gypsum wallboard protection per foot of length (lb/ft)
D = heated perimeter (in) as shown in Figure 17-6

The following formula can be used to derive the total weight of both the column and its gypsum wallboard protection (W'):

$$W' = W + \frac{50hD}{144} \qquad (17\text{-}4)$$

Where:

W' = weight of steel column and gypsum wallboard protection per foot of length (lb/ft)
W = weight of steel column per linear foot (lb/ft)
h = thickness of protection (in).
D = heated perimeter (in) as shown in Figure 17-6

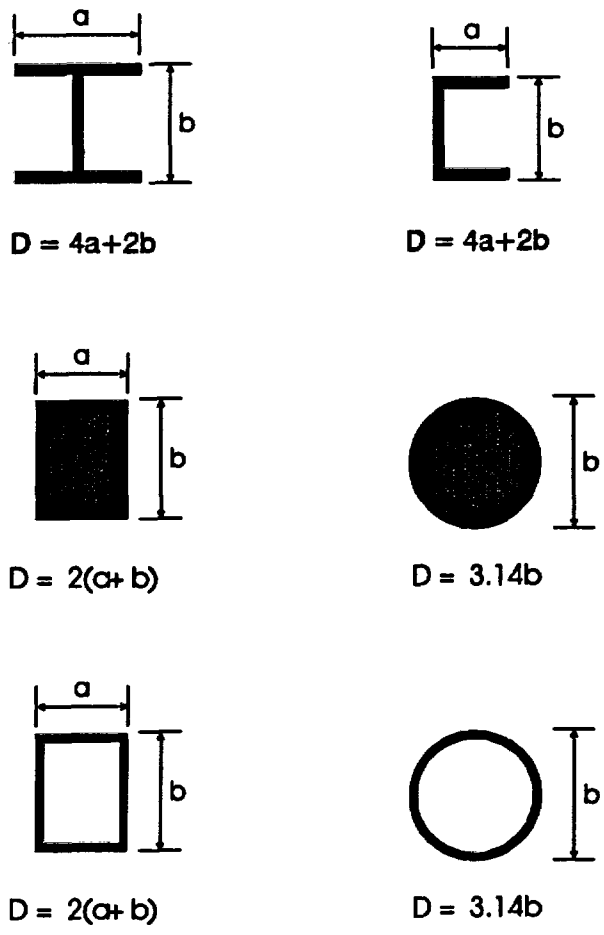

Figure 17-5 Sections of Unprotected Steel Columns

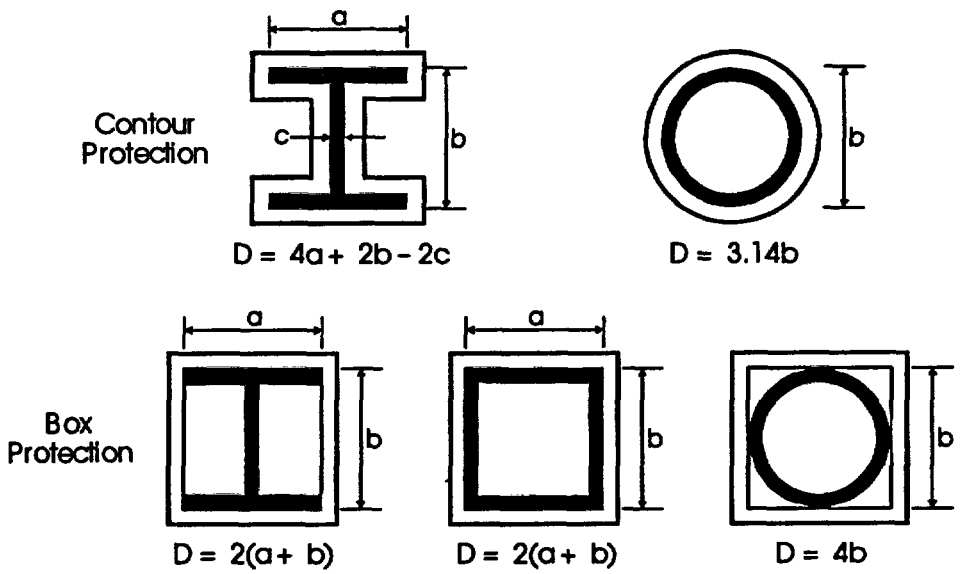

(a) Heated Perimeters for Columns

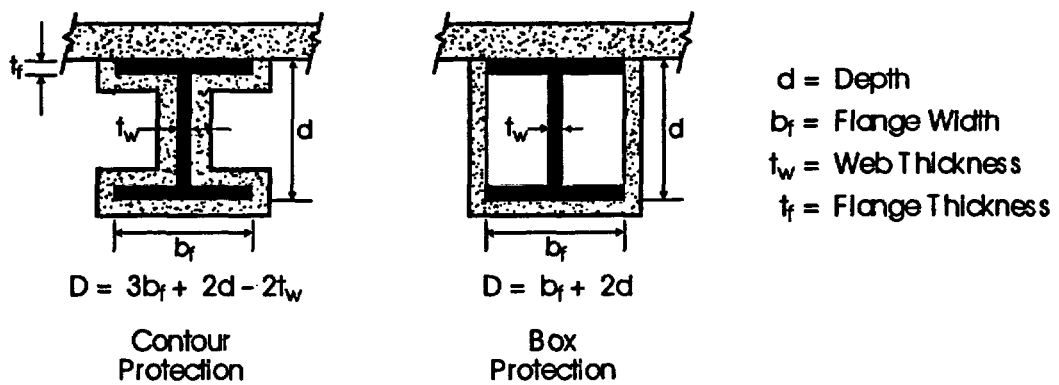

(b) Heat Perimeters for Beams

Figure 17-6 Heat Perimeters for Common Column and Beam Shapes

To improve the structural integrity during exposure to fire gypsum wall board can be reinforced with inorganic fiber. Such reinforced gypsum wall board is usually classified by the accredited testing laboratories, such as Underwriters Laboratories (UL) in North America.

17.8.4 Steel Column (with Low-Density Protection)

Based on experimental and theoretical studies, the following expression has been derived for the fire resistance of steel sections protected by light (low-density) insulating materials (Milke, 1995):

$$R = \left(C_1 \frac{W}{D} + C_2\right) h \qquad (17\text{-}5)$$

Where:

- R = fire resistance (minutes)
- C_1, C_2 = material constants that are known for a specific protecting material
- W = weight of steel column per linear foot (lb/ft)
- D = heated perimeter (in) as shown in Figure 17-6
- h = thickness of protection (in)

As noted above, the material constants C_1 and C_2 are specific to a given protection material. For cases in which the values of C_1 and C_2 are not known, conservative assessment of the fire resistance of protected steel columns can be conservatively assessed using the following equations (ASCE, 1992):

For protection material with a density (ρ) of $20 < \rho \leq 50$ lb/ft³

$$R = \left(1200 \frac{W}{D\rho} + 30\right) h \qquad (17\text{-}6)$$

Equation 17-6 applies to protections consisting of chemically stable materials, such as vermiculite, perlite, and sprayed material fiber with various binders, and dense mineral wool.

$$R = \left(1200 \frac{W}{D\rho} + 72\right) h \qquad (17\text{-}7)$$

Equation 17-7 applies to protections consisting of cement pastes or gypsum, such as cementitious mixtures and plasters.

Where:

- R = fire resistance (minutes)
- W = weight of steel section per linear foot (lb/ft)
- D = heated perimeter (in) shown in Figure 17-6
- ρ = density of protected material (lb/ft³)
- h = thickness of protection (in)

For protection material with a density (ρ) of $10 \le \rho \le 20$ lb/ft³

$$R = \left(45\frac{W}{D} + 30\right)h \qquad (17\text{-}8)$$

Equation 17-8 applies to small round and square columns (less than 6 in.) and thick protection ($h \ge 1.5$ in.).

$$R = \left(60\frac{W}{D} + 30\right)h \qquad (17\text{-}9)$$

Equation 17-9 applies to any shape, sizes, and thickness of protection.

Where:

R = fire resistance (minutes)
W = weight of steel section per linear foot (lb/ft)
D = heated perimeter (in) as shown in Figure 17-6
ρ = density of protected material (lb/ft³)
h = thickness of protection (in)

17.8.5 Steel Column (Protected with Spray-On Materials)

The American Iron and Steel Institute (AISI, 1980) has developed the following formula for two types of spray-on low-density fire protection known as cementitious and mineral fiber insulation:

Cementitious Insulation

$$R = \left(69\frac{W}{D} + 31\right)h \qquad (17\text{-}10)$$

Mineral fiber Insulation

$$R = \left(63\frac{W}{D} + 42\right)h \qquad (17\text{-}11)$$

Where:

R = fire resistance (minutes)
W = weight of steel column per linear foot (lb/ft)
D = heated perimeter (in) as shown in Figure 17-6
h = thickness of protection (in)

17.8.6 Steel Column (Protected by Concrete)

Concrete encasement is another means of protecting for steel columns. The following empirical formulae have been developed to predict the fire resistance of concrete encased steel columns:

Normal weight concrete protection of uniform thickness on all sides and square shape

$$R = 11\left(\frac{W}{D}\right)^{0.7} + 19h^{1.6}\left[1 + 94\left(\frac{H}{\rho_c h(L+h)}\right)^{0.8}\right] \qquad (17\text{-}12)$$

Lightweight concrete protection

$$R = 11\left(\frac{W}{D}\right)^{0.7} + 23h^{1.6}\left[1 + 94\left(\frac{H}{\rho_c h(L+h)}\right)^{0.8}\right] \qquad (17\text{-}13)$$

Where:

R = fire resistance time at equilibrium moisture condition, here assumed to be 4-percent of the concrete by volume (minutes)
W = weight of steel column per linear foot (lb/ft)
D = developed heated perimeter of steel columns (in) shown in Figure 17-7
h = thickness of concrete protection (in)
H = thermal capacity of steel section at ambient temperature (0.11W Btu/ft-°F)
ρ_c = density of concrete at ambient temperature (lb/ft^3)
L = interior dimension of one side of square concrete box protection (in) (see note if the box protection is not square).

Notes:

(1) If the concrete box protection is not square, or if the concrete cover thickness is not constant, h and L shall be taken as average values [i.e., $h = ½ (h_1 + h_2)$ and $L = ½ (L_1 + L_2)$.]

(2) If the steel column is completely encased in concrete, with all re-entrant spaces filled, the thermal capacity of the concrete within the re-entrant space may be added to the thermal capacity of the steel column, thereby increasing the value of H as follows:

$$H = 0.11W + \frac{\rho_c}{720}\,(L_1L_2 - A_s) \qquad (17\text{-}14)$$

Where:

H = thermal capacity of steel section at ambient temperature (0.11W Btu/ft-°F)
W = weight of steel column per linear foot (lb/ft)
ρ_c = density of concrete at ambient temperature (lb/ft^3)
L_1 = steel column flange width (in)
L_2 = depth of steel column (in)
A_s = cross-sectional areas of steel column (in^2)

17.8.7 Steel Beams

When a beam is fire tested alone or as a part of a floor or roof assembly, it expands as it is heated. Floor test furnaces encase the specimen in a rigid restraining frame. If the beam is built tightly into the frame, the frame resists its expansion and moments are generated in the beam. The critical temperature of beams is much better understood and has limits of 593 °C (1,100 °F) when the beam is tested as part of an assembly, and 538 °C (1,000 °F) when the beam is tested alone.

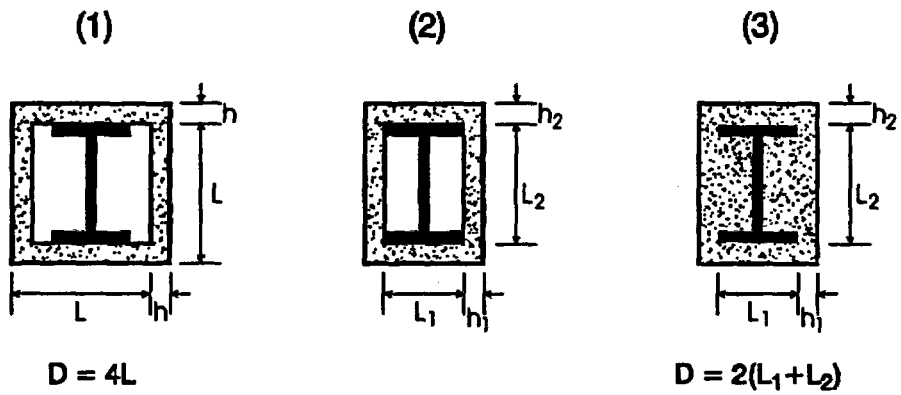

(1) Square shape protection with a uniform thickness of concrete cover on all sides
(2) Rectangular shape with varying thickness of concrete cover
(3) Encasement having all re-entrant spaces filled with concrete

Figure 17-7 Concrete-Protected Structural Steel Columns

W/D concepts can also be applied to assess protection requirements for steel beams in both restrained and unrestrained assemblies. To determine the fire resistance of steel beams protected by low-density protection, we can use the same formulae as for steel columns (Equations 17-5 to 17-11), as shown in Figure 17-6.

In the case of beams, only three sides of the beam are exposed to fire Figure 17-6b. The top of the beam is assumed to be a floor or roof slab, made of a perfectly insulating material. Thus, there is no heat exchange between the floor or roof slab and the steel. Because only three sides of the beam are exposed to heat, the values of the heated perimeter (D) of beams in these formulas are smaller than those of the corresponding column. As a result, the fire resistance of a beam, (i.e., the time to reach a specific failure temperature in the steel) is longer than that for a column. In addition, because the floor or roof on the top of the beam normally absorbs heat transmitted through the beam, which is not taken into account in the formulae the fire resistance calculated using these formulae, are more conservative for beams than for columns.

17.8.7.1 Beam Substitution Correlation for Structural Steel Beams Protected by Spray-On Materials

For beams protected by spray-on protections, the International Committee for the Study and Development of Tubular Structures (ICSDTS) (1976) has developed a scaling formula that enables substitution of one beam for another by varying the thickness of the protection.

Provided the deck is the same and D is calculated only for three-sided exposure, we can us the following beam substitution equation, which has achieved code acceptance (Milke, 1995, and UL, 1995):

$$h_1 = \left(\frac{\frac{W_2}{D_2} + 0.6}{\frac{W_1}{D_1} + 0.6} \right) h_2 \qquad (17\text{-}15)$$

Where:

h = thickness of spray-applied protection (in)
W = weight of the structural beam per linear foot (lb/ft); see note
D = heated perimeter of the beam (in) as shown in Figure 17-6; see note

Note: h_1, W_1, and D_1 refer to the substitute (unrated) beam and required thickness of fire protection material.

h_2, W_2, and D_2 refer to the beam and fire protection thickness in the approved assembly (rated beam).

Use of above the equation is subject to the following limitations:

- The unrestrained beam in the tested design has a rating of not less than 1-hour.
- The equation is limited to beams with a weight-to-heated-perimeter ratio (W/D) of 0.37 or greater.

- The thickness of the spray-on protection (h_1) cannot be less than 0.95 cm (⅜ inch).

The above equation pertains only to the determination of the protection thickness for a beam in a floor or roof assembly.

17.8.7.2 Column Substitution Correlation for Structural Steel Columns Protected by Spray-On Materials

A scaling substitution correlation has also been developed to calculate the required thickness of spray-on protection for columns (UL, 1995) as follows:

$$h_2 = 1.25h_1\left(\frac{W_1}{D_1}\right)\left(\frac{D_2}{W_2}\right) \qquad (17\text{-}16)$$

Where:

h_1 = thickness of spray-on protection on the approved assembly (rated column), (in)
h_2 = required thickness of spray-on protection on substitute column (in) (smaller wide flange section)
W_1 = weight of the structural column per linear foot for the approved assembly (rated column (lb/ft)
W_2 = weight of the structural column per linear foot for the smaller wide flange section (lb/ft)
D_1 = heated perimeter of the column (in), for the approved assembly (rated column) as shown in Figure 17-6
D_2 = heated perimeter of the column (in) for the for the smaller wide flange section as shown in Figure 17-6

Use of the above column substitution correlation is subject to following limitations:

- The unrestrained beam in the tested design has a rating of not less than 1-hour.
- The equation is limited to beams with a weight-to-heated-perimeter ratio (W/D) of 0.95 cm (⅜ inch) or greater.
- The thickness of the spray-on protection (h_1) cannot be less than 0.95 cm (⅜ inch).

17.8.8 Numerical Method to Estimate the Temperature Increase In Structural Steel Elements

For structural steel elements, there is a critical temperature at which the steel loses so much strength that it can no longer support its design load. In such cases, calculations of the fire resistance of the steel members can be reduced to calculating the temperature of the steel. North American standards assume that the critical temperature condition is reached when the average temperature in a steel section reaches 538 °C (1,000 °F).

The simple numerical method is based on the principle that the heat entering the steel over the exposed surface area in a small time step, Δt (sec), is equal to the heat required to raise the temperature of the steel by ΔT_s (°C or °F), assuming that the steel section is a lumped mass at

uniform temperature. This numerical method can be further simplified by considering the steel to be a heat sink, with negligible resistance to heat flow; thus, any heat supplied to the steel section is considered to be instantly distributed to give a uniform steel temperature.

17.8.8.1 Unprotected Structural Steel Sections

The following equation calculates the temperature development of an unprotected steel member, using a quasi-stationary approach, iterated for successive time steps of Δt (sec):

$$\Delta T_s = \frac{\alpha}{c_s \frac{W}{D}} \left(T_f - T_s\right) \Delta t \qquad (17\text{-}17)$$

Where:
ΔT_s = temperature in the steel member (°F)
α = heat transfer coefficient from exposure to steel member (Btu/ft^2-sec)
c_s = specific heat of steel (Btu/lb-°F)
W/D = ratio of weight of steel section per linear foot and heated perimeter (lb/ft^2)
T_f = fire temperature (R)
T_s = steel temperature (R)
Δt = time step (sec)

The heat transfer coefficient, α, is given by the following equation:

$$\alpha = \alpha_r + \alpha_c \qquad (17\text{-}18)$$

Where:
α_r = radiative portion of heat transfer (Btu/ft^2-sec)
α_c = convective portion of heat transfer (Btu/ft^2-sec)

The convective heat transfer coefficient is recommended to have a value of 9.8×10^{-4} to 1.2×10^{-3} Btu/ft^2-sec, where α_r is derived using the following equation:

$$\alpha_r = \frac{C_1 \varepsilon_f}{T_f - T_s}\left(T_f^4 - T_s^4\right) \qquad (17\text{-}19)$$

Where:

$C_1 = 4.76 \times 10^{-13}$ Btu/ft^2-sec-R^4
ε_f = flame emissivity can be evaluated from Table 17-4 (Milke, 1995)
T_f = fire temperature (R)
T_s = steel temperature (R)

Table 17-4. Resultant Emissivity for Different Types of Construction	
Type of Construction	Resultant Emissivity
Column exposed to fire on all sides	0.7
Column outside facade	0.3
Floor girder with floor slab of concrete (only the underside of the bottom flange being directly exposed to fire)	0.5
Floor girder with floor slab on the top flange girder of I section for which the width-depth ratio is not less than 0.5	0.5
Girder of I section for which the width-depth ratio is less than 0.5	0.7
Box girder and lattice girder	0.7

The fire temperature (T_f) is evaluated at the midpoint of each time step. If the exposure under consideration is that associated with the ASTM E119 test, T_f at any time (t) is obtained from the following expression:

$$T_f = C_1 LOG\ (0.133t + 1)\ T_a \qquad (17\text{-}20)$$

Where:

C_1 = 620 with a fire temperature T_f
T_a = ambient temperature (°F) (Milke, 1995)

The maximum time step (Δt) can be determined from the following relationship (Molhotra, 1982):

$$\Delta t > 15.9\ \frac{W}{D} \text{ (English units)} \qquad (17\text{-}21)$$

Table 15-5 shows a spread sheet for calculating steel temperature using this method (Buchanan, 2001). Kay et al., (1996) have shown that this type of calculation can give a good prediction of steel temperatures in standard fire resistance tests.

Table 17-5. Spreadsheet Calculation for the Temperature of Steel Sections (Buchanan, 2001)				
Time	Steel Temperature (T_s)	Fire Temperature (T_f)	Difference in Temperature	Change in Steel Temperature (ΔT_s)
$t_1 = \Delta t$	Initial steel temperature (T_{s0})	Fire temperature halfway through time step (at $\Delta t/2$)	$T_f - T_{s0}$	Calculate from Equation (17-17) with values of T_f and T_{s0} from this row
$t_2 = t_1 + \Delta t$	T_s from previous time step + ΔT_s from previous row	Fire temperature halfway through time step (at $t_1 + \Delta t/2$)	$T_f - T_s$	Calculate from Equation (17-17) with values of T_f and T_s from this row

17.8.8.2 Protected Structural Steel Sections

Protected steel members heat up more slowly than unprotected members because of the applied thermal insulation, which protects the steel from rapid absorption of heat. The calculation method for protected steel members is similar to that for unprotected steel members. However, the equation is slightly different and does not a require heat transfer coefficient because it is assumed that the external surface of the insulation is at the same temperature as the fire gases, while the internal surface of the insulation is at the same temperature as the steel.

The thermal capacity of the insulation material may be neglected if the following inequality is true:

$$c_s \frac{W}{D} > 2 c_i \rho_i h \qquad (17\text{-}22)$$

Where:

W/D = ratio of weight of steel section per linear foot and heated perimeter (lb/ft^2)
c_i = specific heat of insulation (Btu/lb-°F)
ρ_i = density of insulation (lb/ft^3)
h = thickness of insulation (in)

If the thermal capacity of the insulation layer is neglected, the temperature rise in the structural steel element can be calculated using the following equation:

$$\Delta T_s = \frac{k_i}{c_s \; h \frac{W}{D}} \left(T_f - T_s\right) \Delta t \qquad (17\text{-}23)$$

Where:

ΔT_s = temperature increase in steel (°F)
k_i = thermal conductivity of insulation (Btu/ft-hr-°F)
c_s = specific heat of steel (Btu/lb-°F)
h = thickness of insulation (in)
W/D = ratio of weight of steel section per linear foot and heated perimeter (lb/ft^2)

T_f = fire temperature (°F)
T_s = steel temperature (°F)
Δt = time step (sec)

If the thermal capacity of the insulating material must be accounted for, as in the case of gypsum and concrete insulating materials, Equation 17-23 can be modified as follows:

$$\Delta T_s = \frac{k_i}{h}\left(\frac{T_f - T_s}{c_s \frac{W}{D} + \frac{1}{2} c_i \rho_i h}\right)\Delta t \qquad (17\text{-}24)$$

Table 17-6 summarizes the typical thermal properties of various insulation materials.

Table 17-6. Thermal Properties of Insulation Materials (Buchanan, 2001) (Waiting for copyright permission)			

17.9 Assumptions and Limitations

The methods discussed in this chapter are subject to several assumptions and limitations.

(1) The heat transfer analysis is one dimensional.

(2) Correlations are based on the analysis of data resulting from performing the standard test numerous times, using curve-fitting techniques to establish the various correlations.

(3) As the structural member heats up, its structural properties change substantially.

(4) Equation-specific limitations applies (see the various equations throughout this chapter).

17.10 Required Input for Spreadsheet Calculations

The user must obtain the following information to using the spreadsheet:

(1) dimensions of the steel member in question

(2) thermal properties of the applied insulation

17.11 Cautions

(1) Use (FR_Beams_Columns_Substitution_Correlation.xls, FR_Beams_Columns_Quasi_Steady_State_Spray_Insulated.xls, FR_Beams_Columns_Quasi_Steady_State_Board_Insulated.xls, FR_Beams_Columns_Quasi_Steady_State_Uninsulated.xls) spreadsheet on the CD-ROMor calculating the fire resistance of structural steel members.

(2) Make sure you are on the correct page of the spreadsheet (for columns or beams)

(3) Make sure to enter all input parameters using the correct units.

17.12 Summary

The fire resistance/endurance of the beams, girders, and columns that comprise the structural frame of the walls, partitions, floor/ceiling assemblies, and roof/ceiling assemblies that serve as barriers to flame movement have been a historical basis for classifying buildings and rating frame and barrier capabilities.

The selection of building materials and the design details of construction have always played an important role in building fire safety. Two of the important structural fire considerations are the ability of the structural frame to avoid collapse and the ability of the barrier to prevent ignition and resulting flame spread into adjacent spaces.

Heat transfer analyses are applied to determine the time period required to heat structural members to a specified critical temperature. The required time period is then defined as the fire resistance/endurance time of the member.

The critical temperature of a structural member can be determined by referring to the temperature endpoint criteria cited in ASTM E119 or by a structural assessment, as discussed in this chapter.

17.13 References

AISI, *Designing Fire Protection for Steel Columns*, 3rd Edition, American Iron and Steel Institute, Washington, DC, 1980.

ASCE Manuals and Reports on Engineering Practice, No. 78, "Structural Fire Protection," Lie, Editor, American Society of Civil Engineers, New York, 1992.

ASTM E119, "Standard Test Methods for Fire Tests of Building Construction and Materials," ASTM Fire Test Standard, 5th Edition, American Society of Testing and Materials, West Conshohocken, Pennsylvania, pp. 793–813, 1999.

Buchanan, A.H,. *Structural Design for Fire Safety*, John Wiley & Sons Limited, New York, 2001.

International Committee for the Study and Development of Tubular Structure, (ICSDTS), 1976.

Kay, T.R., R.B. Kirby, and R.P. Preston, "Calculation of Heating Rate of an Unprotected Steel Member in a Standard Fire-Resistance Test," *Fire Safety Journal*, Volume 26, pp. 327–350, 1996.

Milke, J,A., "Analytical Methods for Determining Fire Resistance of Steel Members," Section 4, Chapter 9, *SFPE Handbook of Fire Protection Engineering*, 2nd Edition, P.J. DiNenno, Editor-in-Chief, National Fire Protection Association, Quincy, Massachusetts, 1995.

Molhotra, H.L., *Design of Fire-Resisting Structures*. Chapman and Hall, 1982.

Neville, A.M., *Properties of Concrete*. Pitman Publishing Limited, 1975.

NFPA 221, "Standard for Fire Walls and Fire Barrier Walls," 2000 Edition, National Fire Protection Association, Quincy, Massachusetts.

NFPA 251, "Standard Methods of Tests of Fire Endurance of Building Construction and Materials," 1999 Edition, National Fire Protection Association, Quincy, Massachusetts.

UL Fire Resistance Directory, Volume 1, Underwriters Laboratories, Inc., Northbrook, Illinois, p. 19, 1995.

This page intentionally left blank.

17.14 Problems

Example Problem 17.14-1

Problem Statement
Calculate the thickness of spray-on fire protection required to provide a 2-hour fire resistance for a W12x16 beam to be substituted for a W8 x 17 beam requiring 1.44 in. of protection for the same rating.

This page intentionally left blank.

Example Problem 17.14-2

Problem Statement

Use the quasi-steady-state heat transfer approach to determine the fire resistance of a W24 x 76 steel beam protected with 0.5 in. of spray-on mineral fiber material.

Sprayed-on mineral fiber has the following thermal properties:

Thermal Conductivity, k_i = 0.06936 Btu/ft-hr-°F
Specific Heat, c_i = 0.28680 Btu/lb-°F
Density, ρ_i =19.0 lb/ft^3

This page intentionally left blank.

CHAPTER 18. ESTIMATING VISIBILITY THROUGH SMOKE

18.1 Objectives

This chapter has the following objectives:

- Identify the hazard results of reduced visibility.
- Identify the factors that influence visibility.
- Describe the effects of smoke on NPPs.
- Explain how to calculate the visibility through smoke.

18.2 Introduction

As described in Chapter 9, smoke from a fire in a compartment rises in a plume to the ceiling. As the plume rises, air is entrained into it, thereby increasing the volume of smoke and reducing its temperature. The smoke spreads out beneath the ceiling and forms a layer that deepens as the compartment begins to fill with smoke. The production of smoke (smoke particulates) reduces visibility as a result of light absorption and scattering. Visibility through smoke is defined in terms of the furthest distance at which an object can be perceived (distance at which an object is no longer visible). Smoke obscures vision and causes irritation and watering of the eyes. Most notably, the intensity of smoke production has the greatest impact on reduction of visibility in a fire compartment or zone. Reduced visibility and inhaled smoke particles are the most frequent reasons of panic, which disorganizes evacuation and prolongs both rescue and firefighting operations. Moreover, in the consequence of absorption, smoke particles are ideal carriers of toxic gases and intensify the process of absorbing poisonous compounds into the human body.

The lachrymatory (causing or tending to cause tears) effects of smoke and hot gases, such as aldehydes or acids associated with smoke particles, have been shown to be important in interfering with vision. Visibility is generally much better at floor level than at higher levels in a compartment, so the possibility of crawling to safety raises the question of the height at which exit signs should be located. However, if sprinklers operate, their cooling and entrainment effects tend to bring the smoke closer to the floor. Moreover, fog (which may result from the use of sprinklers) will interfere with vision. There currently no universally accepted position.

18.3 Smoke Obscuration

Unlike temperature, heat flux, or toxic gases, obscured visibility is not, itself, lethal. A hazard results only if the reduced visibility prevents required manual operator action or escape activity. This hazard is crucial, however, and smoke production has , therefore, been regulated longer than any other product of combustion. Evaluations have shown that personnel remote from the source of a fire are particularly at risk from fire effluent in post-flashover fire scenarios (Beitel et al., 1998). Toxic gases kill largely because people cannot see to find escape routes and because they become disoriented and panic as a result of inhaling irritating gases. A little smoke makes people walk faster, while an increased amount slows the walking speed. Smoke also represents a psychological barrier to an occupant entering a room, often causing people to seek an alternate route and possibly causing the occupant to become trapped in a room without a safe exit (door or window). The same is true for reactor operators who may have to perform specific manual actions in a smoke-filled environment.

18.4 Effect of Smoke on Nuclear Power Plants

Sensitivity studies have shown that prolonged fire-fighting response times can lead to a noticeable increase in fire risk. Smoke, identified as one of the major contributors to prolonged response times, can also cause misdirected suppression efforts, hamper the ability of main control room (MCR) operators to safely shut down the plant, initiate automatic suppression systems in areas away from the fire, and fail electrical equipment.

Any number of possible fire scenarios could be considered threats to safe NPP operations. For example, a fire in turbine building, cable spreading room (CSR), or the control building can generate toxic combustion products that directly affect the habitability of the MCR or auxiliary shutdown areas. One exception would be a fire in the MCR, itself. The MCR is unique in several ways that significantly reduce the likelihood of a generalized area fire. First, the MCR is continuously manned and, hence, very rapid fire detection and intervention times are expected. This also implies that the transient fuel sources should be very effectively controlled and limited. Second, high-energy electrical equipment is not typically housed in the MCR and, hence, the number of potential high-energy fire sources is limited. Given these factors, the occurrence of a large, generalized fire in the MCR is not considered likely.

18.5 Estimating Visibility Through Smoke - Jin Method

As previously discussed, smoke particles and irritants can reduce visibility and, while loss of visibility is not directly life threatening, it can prevent or delay escape and thus expose people to the risk of being overtaken by fire. Visibility depends on many factors, including the scattering and absorption coefficient of the smoke, size and color of smoke particles, density of smoke, and the eye irritant effect of smoke. Visibility also depends on the illumination in the room, whether an exit sign is light-emitting or light-reflecting, and whether the sign is back- or front-lighted. An individual's visual acuity and mental state at the time of a fire emergency are other factors.

Most visibility measurements through smoke have relied on test subjects to determine the distance at which an object is no longer visible. However, variations in visual observation of up to 25 to 30-percent can occur with the same observer under the same test conditions but at different times. A correlation between the visibility of test subjects and the optical density of the smoke has been obtained in extensive studies by Jin (1974, 1975, 1978, and 1985) (also reported by Klote and Milke, 2002) . Based on those studies, the relationship between visibility and smoke obscuration is given by the following expression:

$$S = \frac{K}{\alpha_m m_p} \qquad (18\text{-}1)$$

Where:

S = visibility (ft)
K = proportionality constant
α_m = specific extinction coefficient (ft^2/lb)
m_p = mass concentration of particulate (lb/ft^3)

The proportionality constant (K) is dependent on the color of the smoke, illumination of the object, intensity of background illumination, and visual acuity of the observer (Klote and Milke, 2002).

Table 18-1 provide values of the proportionality constant (K) for visibility based on the research of Jin.

Table 18-1. Proportionality Constants for Visibility	
Situation	Proportionality Constant K
Illuminated signs	8
Reflecting signs	3
Building components in reflected light	3

The specific extinction coefficient (α_m), depends on the size distribution and optical properties of the smoke particulates. Seader and Einhorn (1976) and Seader (1943) obtained values for the specific extinction coefficient (α_m) from pyrolysis of wood and plastics, as well as from flaming combustion of these same materials. Table 18-2 provide values of α_m.

Table 18-2. Specific Extinction Coefficient for Visibility	
Mode of Combustion	Specific Extinction Coefficient α_m (ft^2/lb)
Smoldering combustion	21,000
Flaming combustion	37,000

Jin also found that walking speed decreases as smoke density increases; i.e., visibility decreases. It can be expected that a decrease in the visibility of walls and floors would cause subjects to slow down. In thick irritating smoke, tears prevented the subjects from seeing the words on signs and caused them to walk in an irregular manner or along the wall. For low-density smoke, however, the walking speeds in irritating smoke were about the same as those in non-irritating smoke.

The mass concentration of particulate (m_p), is given by the following expression:

$$m_p = \frac{M_p}{V} \qquad (18\text{-}2)$$

Where:

m_p = mass concentration of particulate (lb/ft^3)
M_p = mass of particulates produced (lb)
V = volume of smoke in the space (ft^3)

The smoke particulates produced by a fire primarily consist of soot, and the production of particulates can be estimated as follows:

$$M_p = y_p M_f \qquad (18\text{-}3)$$

Where:

M_p = mass of particulates produced (lb)
y_p = particulate yield
M_f = mass of fuel burned (lb)

Table 18-3 lists values of particulate yield (y_p) for a number of materials from small-scale experiments of turbulent flaming combustion.

Table 18-3. Smoke Particulate Yield (Klote and Milke, 2002) (Waiting for copyright permission)	

Table 18-3. Smoke Particulate Yield (continued) (Klote and Milke, 2002) (Waiting for copyright permission)	

18.6 Assumptions and Limitations

The method discussed in this chapter is subject to several assumptions and limitations.

(1) This method takes into account the irritating and non-irritating effects of smoke.

(2) The correlations are developed for smoldering and flaming combustion.

18.7 Required Input for Spreadsheet Calculations

The user must obtain the following information before using the spreadsheet:

(1) compartment width (ft)

(2) compartment length (ft)

(3) compartment height (ft)

(4) fuel type (material)

(5) mass of fuel burn (lb)

18.8 Cautions

(1) Use (Visibility_Through_Smoke.xls) spreadsheet in the CD-ROM for estimating visibility through smoke.

(2) Make sure to enter the input parameters in the correct units.

18.9 Summary

18.9 Summary

This chapter describes a method of calculating the visibility through a smoke layer based on experimental correlations and data. The visibility through thin smoke primarily depends on physical obscuration; however, when the smoke is relatively thick, the physiological irritant becomes the dominant factor in impairing visibility. The correlation presented was obtained from laboratory-scale fires; smoke particulate production is expected to vary with the size of the fire and the orientation of the fuel. Equation 18-1 can be used to calculate visibility in such large fires.

18.10 References

Beitel, J.J., C.L. Beyler, L.A. McKenna, and F.W. Williams, "Overview of Smoke Toxicity Testing and Regulations," NRL/MR/6180-98-8128, Naval Research Laboratory, Naval Technology Center for Safety and Survivability Branch, Chemistry Division, Washington, DC, April 15, 1998.

Jin, T., "Visibility Through Fire Smoke, in Main Reports on Production, Movements and Control in Buildings," Japanese Association of Fire Science and Engineering pp. 100 –153, 1974.

Jin, T., "Visibility Through Fire Smoke," Report of the Fire Research Institute of Japan, 5 (2), pp. 12–18, 1975.

Jin, T., "Visibility Through Fire Smoke," *Journal of Fire and Flammability*, Volume 9, No.2, pp. 135–155, April 1978.

Jin, T. "Irritating Effects of Fire Smoke on Visibility," *Fire Science and Technology*, Volume 5, No. 1, pp. 79–90, 1985.

Klote, J.H., and J.A. Milke, *Principles of Smoke Management*, American Society of Heating, Refrigerating, and Air-Conditioning Engineers, Inc. (ASHRAE), and Society of Fire Protection Engineers (SFPE), ASHRAE Special Publication, 2002.

Seader, J., and I. Einhorn, "Some Physical, Chemical, Toxicological, and Physiological Aspects of Fire Smokes," National Science Foundation (NSF) Report, Utah University, 1976.

Steiner, A.J., "Method of Fire Hazard Classification of Building Materials," ASTM Bulletin, American Society of Testing and Materials (ASTM), Philadelphia, Pennsylvania, pp. 12–18, March 1943.

18.11 Problems

Example Problem 18-1

Problem Statement

NRC FORM 335 (2-89) NRCM 1102, 3201, 3202

U.S. NUCLEAR REGULATORY COMMISSION

BIBLIOGRAPHIC DATA SHEET

(See instructions on the reverse)

1. REPORT NUMBER (Assigned by NRC, Add Vol., Supp., Rev., and Addendum Numbers, if any.)

NUREG-1805, Vol. 1

2. TITLE AND SUBTITLE

Fire Dynamics Tools (FDTs)
Quantitative Fire Hazard Analysis Methods for the
U.S. Nuclear Regulatory Commission
Fire Protection Inspection Program
Draft Report for Comment

3. DATE REPORT PUBLISHED

MONTH	YEAR
June	2003

4. FIN OR GRANT NUMBER

5. AUTHOR(S)

N. Iqbal, M.H. Salley

6. TYPE OF REPORT

Technical

7. PERIOD COVERED *(Inclusive Dates)*

8. PERFORMING ORGANIZATION - NAME AND ADDRESS *(If NRC, provide Division, Office or Region, U.S. Nuclear Regulatory Commission, and mailing address; if contractor, provide name and mailing address.)*

Division of Systems Safety and Analysis
Office of Nuclear Reactor Regulation
U.S. Nuclear Regulatory Commission
Washington, DC 20555-0001

9. SPONSORING ORGANIZATION - NAME AND ADDRESS *(If NRC, type "Same as above"; if contractor, provide NRC Division, Office or Region, U.S. Nuclear Regulatory Commission, and mailing address.)*

Same as above

10. SUPPLEMENTARY NOTES

11. ABSTRACT *(200 words or less)*

The U.S. Nuclear Regulatory Commission (NRC), Office of Nuclear Reactor Regulation (NRR), Division of Systems Safety and Analysis (DSSA), Plant Systems Branch (SPLB), Fire Protection Engineering and Special Projects Section has developed quantitative methods, known as "Fire Dynamics Tools (FDTs)," to assist regional fire protection inspectors in performing fire hazard analysis (FHA). These methods have been implemented in spreadsheets and taught at the NRC's quarterly regional inspector workshops conducted in 2001–2002. The goal of the training is to assist inspectors in calculating the quantitative aspects of a postulated fire and its effects on safe nuclear power plant (NPP) operation. FDTs were developed using state-of-the-art fire dynamics equations and correlations that were pre-programmed and locked into Microsoft Excel® spreadsheets. These FDTs will enable the inspector to perform quick, easy, first-order calculations for the potential fire scenarios using today's state-of-the-art principles of fire dynamics. Each FDTs spreadsheet also contains a list of the physical and thermal properties of the materials commonly encountered in NPPs. The FDTs are intended to assist fire protection inspectors in performing risk-informed evaluations of credible fires that may cause critical damage to essential safe-shutdown equipment. This is the process required by the new reactor oversight process (ROP) in the NRC's inspection manual. In the new ROP, the NRC is moving toward a more risk-informed, objective, predictable, understandable, and focused regulatory process.This NUREG addresses the technical bases for FDTs. The subject matter of this NUREG covers many aspects of fire dynamics and contains descriptions of the most important fire processes. A significant number of examples, reference tables, illustrations, and conceptual drawings are presented in this NUREG to expand the inspector's appreciation in visualizing and retaining the material and understanding calculation methods.

12. KEY WORDS/DESCRIPTORS *(List words or phrases that will assist researchers in locating the report.)*

Fire dynamics
Hazard analysis
Inspection
Significance determination process
Risk-informed evaluation

13. AVAILABILITY STATEMENT

unlimited

14. SECURITY CLASSIFICATION

(This Page)

unclassified

(This Report)

unclassified

15. NUMBER OF PAGES

16. PRICE

NRC FORM 335 (2-89)

Printed on recycled paper

Federal Recycling Program

UNITED STATES
NUCLEAR REGULATORY COMMISSION
WASHINGTON, DC 20555-0001

OFFICIAL BUSINESS
PENALTY FOR PRIVATE USE, $300