106 PDR-1 LPDR- Wm-16 (2)
See pocket 2 '87 for encl.

WM DOCKET CONTROL CENTER

'87 MAY 21 A10:54

Department of Energy
Chicago Operations Office
Salt Repository Project Office
505 King Avenue
Columbus, Ohio 43201-2693
Commercial (614) 424-5916
F.T.S. 976-5916

May 15, 1987

James P. Knight, Director
Licensing & Regulatory Division, HQ
RW-24

SUBJECT: TRANSMITTAL OF DOE/SRPO-NRC ESF MEETING DOCUMENTATION

The purpose of this letter is to transmit to you the documentation which resulted from the DOE/SRPO-NRC meeting on the design of the Exploratory Shaft Facility held on May 5-7, 1987 in Houston, Texas. The documentation (enclosed) consists of the meeting summary, Attachment A - List of Attendees, Attachment B - Agenda, and Attachment C - Viewgraphs.

Based on conversations with Owen Thompson of your staff, it is SRPO's understanding that you will formally distribute the enclosures to the officials of the States and Tribes, NRC, DOE-HQ and DOE Project Offices.

If you have any questions concerning this documentation, please call me.

Gordon Appel
Gordon Appel
Acting Director
Regulatory Compliance Division
Salt Repository Project Office

SRPO:APA:max:1426LP

Enclosures:
1) Meeting Summary
2) List of Attendees
3) Agenda
4) Viewgraphs

WM Record File 106
WM Project 16
Docket No.
PDR ✓
LPDR ✓ (5)

Distribution:
Linehan
*R Johnson
D Galson

(Return to WM, 623-SS)

8709080201 870515
PDR WASTE
WM-16 PDR

87050364 H

1626

encl. to 5/15/87 ltr. to Knight from Appel

cc: J. Neff, SRPO, w/encl.
R. Wunderlich, SRPO, w/encl.
R. Lahoti, SRPO, w/encl.
T. Taylor, SRPO, w/encl.
J. Reese, SRPO, w/encl.
A. Avel, SRPO, w/encl.
M. Comar, SRPO, w/encl.
S. Heston, SRPO, w/encl.
S. Kale, RW-20, w/encl.
R. Stein, RW-23, w/encl.
O. Thompson, RW-242, w/encl.
W. Carbiener, ONWI, w/encl.
R. Kennedy, ONWI, w/encl.
J. Van Vliet, ONWI, w/encl.
S. Frishman, TX, w/encl.
S. Zimmerman, TX, w/encl.
M. Hart, TX, w/encl.
J. Thompson, TX, w/encl.
C. Stover, MS, w/encl.
J. Kohler, UT, w/encl.
D. Irby, WMPO-NNWSI, w/encl.
J. Mecca, BWIP, w/encl.
R. Janowski, PB/PB-KBB, w/encl.
J. Linehan, NRC, w/encl.
R. Johnson, NRC, w/encl.

073-87-RC

DOE/SRPO-NRC TECHNICAL MEETING
ON
DESIGN OF EXPLORATORY SHAFT FACILITY
MAY 5-7, 1987
HOUSTON, TEXAS

SUMMARY

Robert L. Johnson 5/8/87
Robert L. Johnson, NRC

Dean Stucker
Dean Stucker, DOE/HQ

M Nataraja 5/8/87
Mysore Nataraja, NRC

Andrew P. Avel 5/8/87
Andrew P. Avel, DOE/SRPO

Susan Zimmerman
Susan Zimmerman, State of Texas

SUMMARY OF TECHNICAL MEETING ON DOE/SRP EXPLORATORY SHAFT FACILITY

MAY 5-7, 1987

BACKGROUND

A technical meeting was held in Houston, Texas on May 5-7, 1987, to discuss aspects of DOE/Salt Repository Project Exploratory Shaft (ESF) Design. The list of attendees is provided as Attachment 1.

The meeting followed the sequence of agenda topics with agreed to adjustments to the schedule and placement of caucus/discussion sessions. The objectives and agenda given in Attachment 2 were developed and agreed to jointly by DOE, NRC, and the State of Texas (hereafter referred to as State). The DOE and NRC viewgraphs used during the presentations are included as Attachment 3.

During the discussion portions of the meeting, NRC and the State presented preliminary observations and questions for which DOE then provided verbal responses. A summary of these observations prepared by NRC, the State of Texas, and responses prepared by DOE is given below organized by the agenda topics. Following this are agreements and action items.

SUMMARY OBSERVATIONS

General

NRC considers that the meeting objectives have been satisfied, in particular: overview of the Title I ESF Design and Title II status; presentation of selected Title II topics; identification of subsequent

particular: overview of the Title I ESF Design and Title II status; presentation of selected Title II topics; identification of subsequent meeting issues; presentation and discussion of NRC and State observations on information presented; and agreements on follow-up actions. NRC also recognizes the considerable benefits derived from this meeting, and encourages DOE to accelerate the release of documents listed below such that meetings addressing specific topics identified below can be planned.

NRC also presented an overview of NRC ESF issues and comments raised during past NRC-DOE interactions. NRC is concerned that the full context of earlier interaction concerns may not have been recognized during some' DOE presentations.

The State found the ESF Design Meeting to be very informative and productive. The meeting accomplished its objectives. However, any silence on the part of the State regarding information presented is not to be considered as agreement with the information. The State viewed this meeting as one for disseminating information. Because of the lack of the timely reception of pertinent documents and information pertaining to the meeting, the State only acknowledges the information presented but has no basis to concur with any of the information.

One general overall concern of the State is the failure of the Department of Energy to be extremely conservative at this stage of the design process given the fact that there is no site specific data. The State is concerned that assumptions made, especially in the conceptual

area, are beyond bounds that could be reasonably determined based on existing information.

DOE shares the NRC and State view that the meeting successfully achieved its predetermined purpose and objectives and that an informative and valuable exchange of information took place. DOE looks forward to maintaining a dialogue with the NRC and State as the necessairly evolutionary ESF design process progresses. DOE believes that it is the responsibility of all parties to share relevant information of mutual interest.

With regard to the general overall observations of the State, DOE does not share the State view that the ESF design is not adequately conservative given the absence of site specific data. DOE believes that it has demonsrated through the course of the meeting presentation and referenced documentation that the developing ESF design has reasonably and conservatively taken into account known and anticipated site conditions and has otherwise provided a sufficient measure of flexibility to accommodate any necessary design changes. DOE believes it is important to note that, ESF design will not be approved for construction until site-specific design data becomes available and the design is verified.

Overview of ESF Objectives and Schedules

1. Purpose of Exploratory Shaft Facility (ESF)

DOE presented an overview of the ESF objectives and the design schedule. In that presentation it was stated that the purpose of the ESF is to provide access to the repository horizon to permit in situ testing.

The NRC staff made an observation that the ESF is not just an access from the surface to the repository horizon of interest; it should be designed and constructed to gather data to characterize the repository site and validate its design during and after the construction of the ESF. Furthermore, the ESF construction schedule should allow geologic mapping of the shaft walls, and collection of other information including geological, geochemical, hydrogeological, geomechanical data, and post-closure seal data.

The State views the ESF shafts as geotechnical tools, not used solely as access to the testing horizon. There should be coordination between the testing and the construction of the shaft. The State feels that testing of the shaft is critical and all possible allowances should be made to accommodate the testing of the shaft during construction. The State is also concerned with the validity of the data obtained from the frozen shaft wall. How will DOE take into account the differences between the frozen strata and the natural state of the strata?

The DOE responded by stating that they recognize the ESF function is to collect site characterization data as well as design validation data, and that the list in the presentation is only a partial one and pertains only to the ESF design in order to stay within the meeting objectives as stated in the meeting Agenda. Additionally, DOE stated that there are adequate provisions in the project plans to accommodate geological mapping and collection of data necessary for pre-construction design verification along with provisions to validate the design. DOE stated that this should be addressed in a meeting with NRC on the subject of in situ testing tentatively being planned for September, 1987.

While NRC recognizes that ESF design objectives do include meeting NRC regulatory requirements, NRC recommends that future Title II design phases, particularly the final Title II design report address more explicitly what is required to address these regulatory requirements as well as specific concerns related to those requirements that have been identified by NRC during past interactions with the DOE.

2. Need for NRC Consultation in Design Development

During the discussion of the logic diagram which DOE presented for the development steps of ESF Title II Design, DOE indicated that current schedules call for the 60% design review to be completed by late August, 1987, the 90% design review by December, 1987, and the A/E final design by early March, 1988. While the NRC considers that this initial overview meeting was an important and successful first step in mutual understanding of DOE's current program and major NRC concerns, the ambitious DOE schedule identified does not appear to allow for additional substantive and timely consultation with NRC before the completion of Title II design since the supporting documents are not yet available for NRC review. NRC requested that their future consultations be through:

(1) continuing to observe the DOE 60% and 90% design reviews,

(2) review of the following documents which have not yet been released to NRC:

(1) Shaft Design Guide

(2) Detailed Design Criteria

(3) Synthetic Data Base

(4) Safety Bases for Design Evaluation of the ESF

(5) Requirements Document

(6) Underground Test Plan

(7) ES Flexibility Study

(8) Testing Interface Specification, and

(3) future technical meetings addressing specific concerns related to the following topics listed in the order of priority:

(1) Safety basis for design evaluation of the ESF

(2) Shaft Design Guide (i.e., shaft design methodology)

(3) Post closure seals

(4) Surface-based testing needed for ESF design

(5) In situ testing in shaft and at depth

NRC requests that DOE expedite the transmittal of the documents listed above to NRC Headquarters and consider the meeting topics above in planning future meetings with NRC.

DOE recognizes NRC's concern with the need for timely receipt of documents and scheduling meetings of technical interest to NRC.

DOE/SRPO will prepare a timely response to NRC's requests of transmittal of the documents and scheduling of technical meetings listed above. Additionally, DOE/SRPO has made all of the above mentioned documents available to NRC's Onsite Representative Office in Columbus, Ohio.

The State observed that there needs to be improvement in the way that the State interacts in the review process. The State feels it should be more involved in the design process.

DOE recognizes the State's concern with interactions in the review process and welcomes any suggestions for improvement in interactions between DOE and the State.

Iteration loops in the design process must be recognized to extend back to the conceptual and Title I designs if necessary to adequately incorporate site specific data. The State requested the complete figure on the design process and schedule that was not presented in the meeting.

DOE/SRPO recognizes that the ESF design process consists of iterative loops which channels, among other input, review comments, criteria changes and site specific data back into the design process to assure a final design adequate for ESF construction. DOE presented a basic schedule for the design process in the interest of complying to agreed upon meeting objectives, but will respond to the State's request for a more complete figure on the ESF design process and schedule.

The State observed that DOE should recognize the different roles of the State statutory and regulatory agencies in the design process and that both should be included.

Matters of State Statutory compliance are being addressed as part of the SRPO Statutory Compliance Plan and is considered by DOE/SRPO to be outside the scope of this meeting.

Current ESF/Repository Physical Interface

3. Current ESF/Repository Interface

DOE presented their current ESF/repository physical interface which shows, (on the basis of the present conceptual design of the repository), the two exploratory shafts will eventually become part of the repository.

This presentation also explained SRP's approach to the control of the ESF/Repository design interfaces. The NRC asked DOE what components of the two exploratory shafts will be integrated into the repository and whether any of the ESF components will eventually be left in place as part of the post closure/decommissioning seals. DOE responded that four components in the ESF are classified as permanent structures. These are: (1) shaft liner,
(2) operational seals, (3) underground openings, and (4) ground support. DOE stated permanent structures are those with a 100 year maintainable design life. It is DOE's current intention that none of these components will become part of the postclosure seals. Further, the ESF design will not preclude the ability to install postclosure seals. The NRC staff requested the post closure seals be the subject of a future meeting.

The State expressed concern regarding the interface of the ESF with the repository. Are there any criteria developed at this time that determine whether or not the ESF will be incorporated into the repository? If so, the State requests this information.

The DOE criteria is based on the Mission Plan objective which states that the DOE intends to use the exploratory shafts during the construction of the repository and is evaluating the most cost effective use of the shafts in the operating repository.

A major concern of the State are the plans, or the lack of plans, for what will happen to the ESF after construction and testing. The State observed there are three scenarios dealing with this issue: (1) if the ESF is constructed but a repository is not built; (2) if the ESF is constructed but is found to be unsuitable for incorporation into the

repository; and (3) if the ESF and the repository are both built and interconnected. DOE seems to be assuming that there will be no difference in the decommissioning of the ESF under these scenarios. The NWPA indicates that DOE should assume both that the ESF will be incorporated into the repository and will not be incorporated into the repository. So far, the State has seen only the assumption that the ESF will be incorporated into the repository. The State is concerned with groundwater protection and general environmental impacts if the ESF is not incorporated into the repository and not adequately decommissioned. The State is also concerned with who has the responsibility for decommissioning the ESF if it is not incorporated into the repository.

Appendix E to DOE, OGR Generic Requirements for a Mined Geologic Disposal System, requires that ESF decommissioning and closure shall be planned for two scenarios: (1) the site is chosen for repository development, and (2) the site is not chosen for repository development. Item (1) encompasses both incorporation and non-incorporation of the ESF into the repository. This same requirements document also requires the protection of groundwater from ESF activities. SRPO's ESF program is proceeding in a manner to comply with these requirements.

The State requested clarification of the purpose and intent of the Shaft C location in the repository relative to the use of the ESF shafts.

The Mission Plan requires that the ESF shaft openings support repository construction as required and that any use beyond this point will be determined. Currently the SCP-CDR identifies the potential use of the ESF shafts for emplacement intake ventilation shafts in the repository. This assumption will be evaluated during the repository

Advanced Conceptual Design (ACD). If it is determined that a fifth repository shaft (Shaft C) is required, the future usuage or decommissioning of the ESF shafts will be evaluated.

The State is concerned with the flexibility of the ESF design. For example, if the local dip of the beds at the testing level is different than expected, are there contingency plans to deal with this.

The present layout is primarily a design preference. There is sufficient flexibility in the design to accommodate any localized variations.

Organizational Overview of Interface Control

The State observed that there is a lack of State involvement in the interface activities and decisions. The State feels it should be involved in these activities, such as the ICWG. The State should be involved from the baseline control process and be able to track these issues through the requirements documents interfaces, shaft design guide and ESF design reviews as well as monthly management reviews and technical communications.

DOE considers these concerns outside the objectives of this meeting and should be discussed in a future meeting with appropriate SRPO representatives. The State should request SRPO upper management schedule a meeting to resolve these concerns.

Overview of Title I ESF Design/Status of ESF Title II Design

An overview of the Title I ESF Design was presented by DOE. The design basis including data base, design criteria, quality assurance, and procedures were described. The technical aspects of shaft freezing,

shaft excavation, shaft lining, and operational seals were included in the presentation.

The status of ESF Title II Design was also presented by DOE which included a description of Appendix E of the Generic Requirements and the Requirements Document. The presentation included current design trends in hoisting, underground layout, testing, and shaft lining.

4. Preferential Flowpaths Resulting from Exploratory Shaft Construction

NRC expressed concern about the possibility that preferential flowpaths might develop as a result of ESF construction. This point was expressed in the NRC introductory meeting presentation as one of two broad concerns expressed during earlier NRC-DOE interactions, notably the ESF-related letter exchange as well as the EA review comments. The concern about the development of preferential flow paths was repeated following the DOE Title I design presentation, because the NRC concern had not been addressed during the DOE presentation. The concern was further elaborated by NRC, particularly with respect to licensing requirements, because preferential flowpaths may impact waste containment and waste isolation performance requirements. Examples of potential flowpaths includes freeze holes, damaged ground around shafts, and ground-shaft liner interfaces. NRC stressed the concern that the impacts of exploratory shafts on preclosure operations and post-closure isolation need to be evaluated during ESF design. NRC cited specific items with potential post closure performance impacts such as: freeze hole decommissioning, shaft liner components left in place permanently, and

permanent changes in hydraulic conductivity of rock induced by freezing and thawing.

DOE's current position concerning these issues is that the exploratory shaft liner and the ground affected by freezing are not relevant to "important to safety" or long-term waste isolation. Currently, no post closure seals are planned to be located in the Ogallala/Dockum aquifer system.

Design Process

DOE stated that similar mining projects were used as a basis for engineering judgments relative to the design of the ESF. The State feels that since a project of this type has no precedent, the judgments made in the design are of concern. The State requested the information used from these similar mining projects. The State feels that there is no reasonable precedent for an actual watertight liner and dry shaft and that the DOE assumption that this can be accomplished is faulty. The State feels that DOE should have contingency plans, such as water management plans, to deal with the possibility of significant water inflows.

The DOE responded that the ESF shafts are being designed using the Shaft Design Guide as a basis. The Shaft Design Guide was written by a group of engineers with extensive knowledge and worldwide expierence in underground construction. The requested information is represented by the Shaft Design Guide. Watertight liners and dry shafts are existing. The shaft design does include water management capability as shown in the 30% Design Review Package.

Design Basis

DOE stated that the design will incorporate the site specific data as it comes in but that at this time the design is based on the synthetic data base. The State expressed concern that site specific data could cause numerous significant changes in the design and that this could affect the overall adequacy of the final design. The process for dealing with these changes in the design should be clearly defined, for example, how far back in the design process will the changes be taken to ensure their adequate incorporation.

The DOE responded that they have prepared a risk/benefit analysis on the readiness to begin Title II ESF design. This review included consideration of the use of synthetic geotechnical data. There is no technical risk to the approach which could affect the overall adequacy of the design for construction.

DOE stated that seals will be placed at "strategic points" in the shaft. The State expressed concern with the term "strategic points: and the lack of State involvement with the determination of these points.

DOE responded that "Strategic points" referred to are aquitards or aquicludes.

Freezing

The State expressed concern that the freezing of the upper strata might create pathways for the interconnection of the aquifers and that this possibility has not been addressed sufficiently. The State is also concerned with the effects of shaft construction on the surrounding wall rock and how that these effects will be monitored and evaluated. The State also observed that research has indicated that some seals tend to

just divert water around the seals, thereby allowing cross movement of water between formations. The State is concered with the adequacy of the monitoring of these seals to detect this movement.

The ground freezing design includes consideration of the competency of the ground in the seal areas excavation will be carefully done by manual or mechanical means to avoid adverse effects on the ground. The ground will be protected from deterioration prior to the seal installation. Design validation testing includes seal performance monitoring.

ESF Excavation

Calculations for determining the rate of salt creep have consistently given much lower values than those actually measured in-situ. The State is concerned with the plan by DOE to use these same calculations to determine the amount of overexcavation for the salt sections. The State also expressed concern with the use of the resin foam in these areas of overexcavation.

Compressible materials behind shaft liner have been used successfully in potash mines to prevent the application of lithostatic load to linings. Creep calculations are conservative and will be verified against site specific data.

Shaft Lining

The State observed that the determination of the design pressure envelope was unclear. The State requested the equations and calculations used to determine the pressure envelope. The State also observed that it was unclear if the calculations to determine the pressure envelope took

into account the effects of the non-homogenous nature and the possible anisotrophy of the geologic section.

The State observed that there is the possibility of differential movement of the geologic section on the shaft liner and is concerned that this possibility was not factored into the design of the shaft liner.

The DOE responded that the shaft design pressures are in accord with the Shaft Design Guide. There is no evidence of anisotrophy in the salt section.

The Shaft Design Guide takes differential movement into account. The asphalt behind the liner allows differential movement.

Status of ESF Title II Design

5. Design Impacts of Freeze Zone Environment

The NRC staff expressed a concern regarding how the design of the freeze wall configuration, and the process for closing the freeze holes factored acquisition of data needs into the process freeze wall system design. Specifically, NRC questioned how the design would consider the need for acquisition of data related to: (1) characterizing baseline conditions of the pathway environment existing prior to establishment of the freeze zone; (2) identifying pathway changes that occur within the freeze zone during freezing and thawing; and (3) identifying changes to the pathway environment that may be associated with the design of freeze hole closure, such as, leaving borehole casings in place, perforating the casings, and grouting the casings in place. Acquisition of such data is related to the need to demonstrate that the design and construction of the ESF does not adversely impact the long-term performance of the geologic repository.

DOE does not currently consider the freeze zone as design to adversely affect the future performance of the repository. DOE is developing documentation to demonstrate this assumption.

Documents Referenced

The State observed that the Shaft Design Guide was not in place prior to the Title I design and is still not completed when the Title II design is past 30% complete.

DOE stated that the Shaft Design Guide was completed by the ESF A/E and Repository A/E and submitted to SRPO for approval at the start of Title II design. It is currently in DOE Peer Review.

Design Trends

The State is concerned with the possible underground expansion of the ESF. The State observed that it was unclear who was responsible for designing an expansion needs, what criteria will determine such an expansion need, what areas of the site are available for expansion that are not already included in the conceptual design of the repository and if it is intended for the expansion to be included in the licensed repository facility.

DOE noted that the ESF is a site characterization facility. No expansion of the ESF is planned. Beyond current identified underground drifing requirements for site characterization. Changes in site characterization requirements would be the only basis for any possible ESF expansion. Any expansion would remain in the 9 square mile area and would not affect the repository. An expanded ESF would be included in the repository to the same extent an unexpanded ESF is tentatively planned to be included.

The State expressed concern that the current data base lacks sufficient information to consider reducing or eliminating liners below 1000 feet and requested information on the basis for this decision.

DOE stated that the Synthetic Data Base and the Dry Shaft Criteria from the Shaft Design Guide is the basis for such decisions. This is subject to modification when site specific data become available.

6. Shaft Liner Design

A presentation on the shaft liner design included a description of the frozen ground method of construction in conjunction with the shaft

excavation method. The design methodology and configuration of the shaft lining and operational seals were presented.

The NRC expressed concerns regarding the assumptions and design methodologies used to perform the Title I shaft liner design. The liner stability is of importance as the liner is expected to provide a water-tight barrier during preclosure operations, and the liner must preclude flooding and its subsequent potential adverse effects on normal operations. Examples of the NRC concerns are:

(1) Expected behavior of seal materials - Present experience for the response of similar liners in mines has been obtained over a time scale of less than 50 years, whereas the present design must remain water-tight for roughly 100 years. Concern exists over the methodology by which DOE will address the lack of data regarding long-term performance of critical seal components such as the asphalt and chemical seals, concrete and steel liner plate.

DOE explained that the design for a 100 year maintainable design life is being accomplished by using conservatism in the approach to the design, conservatism in the selection of materials, and particularly by conservatism in allowing for maintenance of the liner and seal system over the design life. Also, it should be noted that liner stability is only important to industrial safety, as the liner is deemed not to be "important to safety" or long-term waste isolation.

(2) Basis of Design Methodology - NRC is concerned with the lack of conservatism inherent in the methodology used to determine rock

loading of the liner. In particular, NRC is concerned with the determination of salt creep rates in overexcavated sections of the shaft, and the subsequent loading of the liner via pressure exerted to resin foam backfills. NRC needs greater detail (which DOE explained is in the Shaft Design Guide) regarding the purpose of the liner through salt zones, and the long-term effectiveness of overexcavation on prevention of lithostatic liner loading.

DOE stated that the design methodology, as defined by the Shaft Design Guide, is adequately conservative and has been successfully used in previous experience.

(3) Basis of Rock Mass Properties Selection in Design - Concern was expressed regarding the choice of rock mass material properties used in the determination of liner loading. The preliminary design provides little basis for the selection of properties (e.g., mechanical properties, in situ stress) or the conservatism inherent in their selection.

DOE explained that the geologic data base used to determine liner loading was prepared by a project-wide task group of geotechnical and engineering personnel headed by the Geologic Project Manager. The properties were selected by examining the possible range of values and making a realistically conservative selection of the data base value.

(4) Applicability of Referenced Past Experience - The adequacy of the shaft liner design and in particular of the asphalt seal

has been based, to a significant extent, on successful past-mining experience. It would be of particular value to the NRC if DOE could provide documents substantiating such performance, e.g., documenting the three cases of salt mine shafts in Louisiana where concrete blocks and asphalt seals have been used successfully, as well as other successful shafts of this type.

A bibliography of information on frozen shaft construction will be made available to the NRC Headquarters. Reference to the three Louisiana shafts, as noted in the meeting, was obtained through personal experience and is contained only in proprietary documents.

7. Interface of Site Characterization Testing and ESF Design Process

The NRC staff expressed the need for site characterization testing interface with the ESF design process. An NRC question was raised on the basis of Chapter 5 of the Title I Preliminary Design Report (March, 1986) which discusses schedules of ESF construction. Section 5.4.7 of this Title I design report briefly mentions the schedules for testing from within the shaft (Phase I) and in the repository horizon (Phase II). However, this section ends with a note that the shaft sinking schedule does not include time allowances for Phase I mapping of shaft geology and geotechnical performance monitoring of the shaft. This suggests that the ESF Title I design has been completed without sufficient consideration of the need for Phase I testing during the shaft sinking. The initial presentation on Title I and Title II design during the meeting did not

clearly address considerations of how testing was factored into the ESF design process.

DOE clarified that all the testing/design interface requirements are specified in the "Testing Interface Specification (TIS)". This document was discussed in the Title II Design presentation and is one of the basic design requirements documents for the Title II design.

DOE further stated that the shaft sinking schedule does include time allowance for mapping and installation of design validation monitoring. The statement made in the Title I design report was noted during the presentation as being outdated. The Technical Interface Specifications, an extensive document identifying the detailed testing needs is one of the twelve Requirements Document referenced documents that constitutes the crteria for the ESF design.

ESF Design Information in the Site Characterization Plan (SCP)

During discussions, DOE stated that information related to ESF design and construction to be presented in the SCP would be based upon Title I design which is now (5/87) out of date and upon preliminary performance analyses based upon Title 1 design considerations. The DOE also stated that the actual construction of the ESF is to be based upon Title II design. NRC is concerned that they will not be reviewing a current or final design during their SCP review. The absence of current design information in the SCP may put an undue burden on the NRC staff to make a conclusion about the propriety of ESF construction initiation. The NRC requested that DOE consider substituting the substantive Title II design revisions to Title I design that would significantly impact ESF construction. Furthermore, those substantive performance analyses

revisions necessitated by substantive Title II design revisions should also be included in the SCP.

DOE is preparing a draft safety basis report which includes a preliminary performance analysis to confirm that the exploratory shaft facility will not adversely impact postclosure waste isolation. This safety basis report is one of the reports requested by NRC under Item Number 2 and should be addressed in a future technical meeting.

DOE specifically acknowledges the NRC staff observation regarding the state of ESF design to be addressed in the SCP. DOE notes that the subject of SCP content is beyond the scope of this meeting. however, SRP is committed to developing an SCP which (1) covers the full scope of information required by NWPA and 10 CFR Part 60, (2) conforms to the guidance of NRC Regulatory Guide 4.17 (as interpreted in the DOE SCP Annotated Outline), and (3) attemps to meet previously agreed page limitations. Since the SCP will present a "snap-shot" of project knowledge and plans, it will describe the most recent, complete ESF activity, i.e. Title I design. Future design advances, changes, related analyses, etc. will be addressed in semi-annual progress reports. Additionally, NRC staff involvement in, and understanding of, SRP ESF activities should be enhanced through specific interactions as described in other sections of this summary.

8. Preliminary Performance Assessments

NRC staff expressed the need for a preliminary performance assessment to precede any Title II design of the ESF in order to estimate the effects of the ESF on long-term waste isolation, particularly on the

ability of long-term shaft seal system to meeting isolation requirements of the repository.

In NRC's opinion it is not conservative for the Title II design to progress without determining whether (a) the ESF construction will preclude gathering of needed site characterization data and (b) the ESF design will preclude providing for adequate post closure sealing.

DOE acknowledges the NRC staff concern and notes that performance allocation of post closure isolation requirements, identification of site characterization data needs and performance assessment are all being conducted under the SCP development process. The results of these activities will be reflected in ESF design activities, particularly in light of the ESF pre-construction readiness review planned to occur prior to start of construction. DOE believes it is pursuing a reasonable design process.

ESF Design Requirements

The State observed that there were changes between the Title I design and the 30% Title II design such as the change in the test horizon elevation. The State requested clarification on the reason for these changes in the designs.

The DOE responsed with an answer in three parts:

(1) In Title I, design was based upon understood geologic formations. In Title II the Synthetic Data Base divided the formations into geologic units.

(2) In Title I the shaft below the frozen zone and above LSA 4 had a watertight final liner. In Title II the wet and dry zones in that area were defined by synthetic data base.

(3) In Title I the ESF A/E located the test horizon at the middle of LSA 4. In Title II the ESF test horizon was located in LSAA 4 at the elevation of the repository horizon as defined in the SCP-CDR which was based upon the Synthetic Data Base.

Shaft Seals and Placements

The State observed that the operational seals were to be placed in an aquitard. The State requested the working definition of an aquitard as used by the A/E in the design.

The DOE responded:

An aquitard is a stratum or sequence of stratea of relatively low permeability which retards the flow (or migration) of water.

An aquiclude is a stratum which is essentially impermeable and prevents the flow (migration) of groundwater between aquifers.

The State expressed concern that the impact of seismic events did not appear to have been considered in the design of the seals.

DOE responded the shaft liner system including seals is designed for seismic events as required by the Shaft Design Guide.

The State requested clarification on the watertight liner as to whether it was a component system or has one element of the system been determined to function as the sole basis for the watertight liner.

DOE responded the primary seal to prevent water inflow to the shaft is the steel plate.

Representativeness of ESF Site and Exploratory Shaft Location Selection

9. Importance of Site Data for Final ESF Location and Design

DOE presented the basis for their preliminary location of the ESF based on regional data. NRC staff noted that prior to final selection of the ESF location within the nine square miles of the site, detailed considerations should be given to site specific data and analyses related to surface hydrology, geohydrology, geology and seismology. The NRC staff also noted that results of analyses using such site specific data from surface-based testing should be factored into the final ESF location and design. The NRC staff questioned how and when DOE planned to integrate the data obtained from pre-shaft construction exploration activities into the design of the exploratory shaft facility, and particularly the design of seals and the freeze wall. DOE indicated that these data needs will be identified and test plans for the acquisition of these needs will be developed. NRC requested that these plans be made available to NRC and selected topics discussed in a surface-based test plan meeting. DOE stated that design modifications will be made as required to address the results of the surface-based testing plan activities and will be addressed in semi-annual SCP updates.

The State observed that the data used as a basis for this presentation did not seem to take into account the possibility of deeper structures under the ESF testing horizon influencing the location of the ESF. The State feels that this possibility could play on important role in the location of the ESF.

DOE responded that there are no known significant structural features that would affect the location of the ESF site within the 9 square miles.

Structural features of the site are discussed in detail in Section 3.2.5 of the EA.

10. Exploratory Shaft Freezing, Lining and Operational Seal Design

DOE presented the Title II shaft design technical update. Design requirements, shaft freezing, shaft excavation, shaft lining and seal design, and shaft lining and seal design, and shaft lining and seal placement.

Post-Closure Seal System Performance

If post-closure performance were to be allocated to seals installed along the exploratory shafts, whether such seals are physically located in the lower salt formation or in the upper formations containing the major aquifers, NRC expects that DOE performance analyses should demonstrate that the post-closure seal system will meet the requirements of 10 CFR Part 60. NRC staff concerns originate from the fact that post-closure seal system performance may not have been adequately factored into the Title II design and proposed ESF construction techniques. For example, excessive rock loosening due to creep and stress relief resulting in flowpath development from aquifer to seal and/or resulting in bypass flowpaths around seals, could be expected to develop over a period of time. The performance analyses should cover such seal system failure scenarios in the overall context of the repository performance.

DOE/SRPO is preparing a draft safety basis report which includes a preliminary performance analysis to demonstrate that the exploratory shaft facility will not adversely impact postclosure waste isolation. This safety basis report is one of the reports requested by NRC under Item 2 and should be addressed in a future technical meeting.

Design Validation Testing

The DOE presented a description of the design validation and the design performance monitoring testing of the underground openings, the shaft structural components, and the shaft water control.

Roles of Parties Involved

NRC would like further clarification regarding the specific roles of various parties involved in instrumentation, monitoring and testing in the exploratory shaft so that they can better understand the interrelationship among the various activities.

DOE described the roles in general and indicated that specifics are identified in the Testing Interface Specification and the most recent version of the Underground Test Plan.

SUMMARY

In light of the information exchanged among the meeing participants, a general consensus was reached on the necessity and deliverability of sharing information on all respects of ESF design and analysis. DOE is prepared to factor present and future NRC and State comments into its ESF design and planning efforts as necessary and appropriate.

AGREEMENTS

DOE, NRC and the State of Texas agree that the meeting objectives were satisfied and that the meeting was informative and productive.

DOE/NRC ACTION ITEMS

(1) DOE agreed to provide a timely response to NRC's requests for expedited transmittal of documents listed above.

(2) DOE agreed to consider and discuss further with NRC how the topics listed above can be included in future technical meetings.

(3) DOE agreed to provide a timely response to NRC's request identified above for documents substantiating the adequacy of the shaft liner design and in particular the asphalt seal.

(4) DOE agreed to provide a timely response to NRC's request for surface-based test plans.

DOE/STATE OF TEXAS ACTION ITEMS

(1) The State requests that any information sent to the NRC be also sent to the State.

(2) DOE agreed to provide a complete figure on the design process schedule presented in the Agenda item, Overview of ESF Objectives & Schedules.

(3) For suggested meeting topics, the State requests the following along with the NRC suggested topics:

(a) Effects of ground freezing on the Ogallala/Dockum aquifers.

(b) Shaft construction

-construction/testing interface

-the freezing process.

This is just a preliminary list and can be added to by the State at a later date.

a&ai.1

DOE/SRPO-NRC TECHNICAL MEETING
ON
DESIGN OF EXPLORATORY SHAFT FACILITY
MAY 5-7, 1987
HOUSTON, TEXAS

ATTACHMENT 1 - LIST OF ATTENDEES

SRP/NRC ESF MEETING PARTICIPANTS

MAY 5, 1987

NAME	ORGANIZATION	TELEPHONE NO.
Huang, H.C.	Battelle	614-424-5093
Avel, A.P.	DOE-SRPO	FTS 976-5916
Comar, M.M.	DOE-SRPO	614-424-5916
Janowski, R.H.	Parsons Brinckerhoff/PB-KBB	713-531-6069
Cottle, Ivan	ONWI	614-424-5258
Stucker, Dean	DOE-HQ (OGR)	202-586-1244
Thompson, Owen	DOE-HQ-Licensing	202-586-5003
Hart, Margaret	Texas Water Commission	512-463-7797
Zimmerman, Susan	Governor of Texas Nuclear Waste Programs Office	512-463-2198
Frishman, Steve	Nuclear Waste Programs Office Office of the Governor	512-462-6250
Thompson, Jim	Consultant Texas NWPO	713-462-6250
Linehan, John	NRC	301-427-4177
Daemen, Jaak	Consultant-Itasca-NRC	602-621-2501
Board, Mark	Consultant-Itasca-NRC	612-623-9599
Pearring, Jerome R.	NRC	301-427-4648
Nataraja, Mysore (Raj)	NRC	301-427-4319
Johnson, Robert L.	NRC	301-427-4674
Tanious, N. S.	NRC	301-427-4736
Sturgis, George	Parsons-Redpath	614-486-0434
Saunders, R.S.	Fluor/Morrison Knudsen	208-386-5434
Montgomery, James E.	Weston/Jacobs Engr.	202-646-6697
Beall, Ken	Battelle/ONWI/Engr.	614-424-4509
Goldberg, Steve	Battelle Licensing Counsel	614-424-7206
Van Vliet, Jim	Battelle/ONWI/Licensing	614-424-7803
Dosa, John	Battelle/ONWI/Licensing	614-424-5404
Oschman, Kurt P.	Battelle/ONWI/Geotechnical	614-424-4673
Appel, Gordon	DOE-CH/SRPO (RCD)	614-424-5916
Stover, Curtis	Ms. Bureau of Geology	601-354-6228
Hadley, Karl A.	Rockwell/BWIP Licensing	509-376-5597
Wintczak, Tom	Rockwell/Exploratory Shaft Prog.	509-376-8028
Winsor, David B.	PB/PB-KBB	713-531-6069
Irby, Dennis H.	DOE/NV/WMPO	702-295-1696
Fredrickson, Jerry	SAIC	702-295-5883
Rutkauskas, V. J.	Battelle/ONWI	614-424-7668
Mirza, Mahmood B.	PB/PB-KBB	713-531-6069
Cooley, Austin I.	PB/PB-KBB	713-531-6069
Poppen, S.A.G.	PB/PB-KBB	713-531-6069
Sadik, Wayne	PB/PB-KBB	713-531-6069
Bermanis, Henry L.	Weston/United Engineers	202-646-6664
Kohler, James F.	State of Utah	801-538-5554
Farzin, M. Hassan	Columbia General, Inc.	614-424-4472

DOE/SRPO-NRC TECHNICAL MEETING
ON
DESIGN OF EXPLORATORY SHAFT FACILITY
MAY 5-7, 1987
HOUSTON, TEXAS

ATTACHMENT 2 - AGENDA

1

NRC/SRP MEETING ON ESF DESIGN

MAY 5-7, 1987

IN

HOUSTON, TEXAS

MEETING LOCATION: Hyatt Regency West*
13210 Katy Freeway
Houston, TX 77079
(713) 558-1234

MEETING OBJECTIVE: Overview the Title I ESF Design and Title II status; present selected Title II topics; identification of subsequent meeting issues; solicit and discuss NRC/State/Tribes observations on information presented; agree on follow-up actions.

8:30 - 9:00	Introduction - Welcome - Identification of participants - Scope and Objectives of meeting - Procedures to be followed - Review of agenda - Identification of Representatives to prepare summary	ALL PARTIES ALL PARTIES
9:00 - 9:15	OVERVIEW OF PAST NRC ISSUES AND COMMENTS	NRC
9:15 - 9:45	OVERVIEW OF ESF OBJECTIVES & SCHEDULE	SRPO
9:45 - 10:00	BREAK	
10:00 - 10:30	CURRENT ESF/RESPOSITORY PHYSICAL INTERFACE	SRPO
10:30 - 11:30	OVERVIEW TITLE I ESF DESIGN	PB/PB-KBB
11:30 - 12:30	STATUS OF ESF TITLE II DESIGN o Basis for design o Current Design Trends + Hoisting + Underground Layout + Shaft Testing	ONWI
12:30 - 1:30	LUNCH	

1:30 - 2:00	REPRESENTATIVENESS OF ESF SITE o Regional Geology o Random Sample o Verified By Testing	ONWI
2:00 - 2:30	EXPLORATORY SHAFT LOCATION SELECTION o Selection Criteria o Conclusions	SRPO
2:30 - 3:00	CAUCUS TIME	ALL PARTIES
3:00 - 3:30	PRESENTATION OF PRELIMINARY OBSERVATIONS ON PRESENTATION	ALL PARTIES
	DISCUSSION OF PRELIMINARY OBSERVATIONS ON PRESENTATION	ALL PARTIES
	IDENTIFICATION OF TOPICS FOR FURTHER DISCUSSION	ALL PARTIES
3:30 - 5:30	EXPLORATORY SHAFT FREEZING, LINING AND OPERATIONAL SEAL DESIGN o Design Requirements o Shaft Freezing o Shaft Excavation o Shaft Lining and Seal Design o Shaft Lining and Seal Placement	PB/PB-KBB
5:30 - 6:00	CAUCUS	ALL PARTIES

DAY TWO

8:30 - 9:00	PRESENTATION OF PRELIMINARY OBSERVATIONS ON PRESENTATION	NRC
9:00 - 9:30	DISCUSSION OF PRELIMINARY OBSERVATIONS ON PRESENTATION	ALL PARTIES
9:30 - 10:00	IDENTIFICATION OF TOPICS FOR FURTHER DISCUSSION	ALL PARTIES
10:00 - 10:15	BREAK	
10:15 - 10:30	DESIGN VALIDATION TESTING o Operational Seal Monitoring o In-shaft Testing for Design Input Validation	PB/PB-KBB

10:30 - 11:00	ESF A-E QUALITY ASSURANCE PROGRAM FOR ESF DESIGN	PB/PB-KBB
11:00 - 12:00	CAUCUS	ALL PARTIES
12:00 - 1:00	LUNCH	
1:00 - 2:00	PRESENTATION OF PRELIMINARY OBSERVATIONS ON PRESENTATION	ALL PARTIES
2:00 - 3:00	DISCUSSION OF PRELIMINARY OBSERVATIONS ON PRESENTATION	ALL PARTIES
3:00 - 4:00	IDENTIFICATION OF TOPICS FOR FURTHER DISCUSSION	ALL PARTIES
	ADJOURN	

DAY THREE

8:30 - 12:00	PREPARE SUMMARY MEETING NOTES	IDENTIFIED REPRESENTATIVES
12:00 - 1:00	LUNCH	
1:00 - 5:00	RECONVENE AND FINALIZE SUMMARY MEETING NOTES (EXTEND TO NEXT DAY AS REQUIRED)	IDENTIFIED REPRESENTATIVES

DOE/SRPO-NRC TECHNICAL MEETING
ON
DESIGN OF EXPLORATORY SHAFT FACILITY
MAY 5-7, 1987
HOUSTON, TEXAS

ATTACHMENT 3 - VIEWGRAPHS

NRC/SRP MEETING ON ESF DESIGN

MAY 5-7, 1987

IN

HOUSTON, TEXAS

MEETING LOCATION: Hyatt Regency West
13210 Katy Freeway
Houston, TX 77079
(713) 558-1234

MEETING OBJECTIVE: Overview the Title I ESF Design and Title II status; present selected Title II topics; identification of subsequent meeting issues; solicit and discuss NRC/State/Tribes observations on information presented; agree on follow-up actions.

8:30 - 9:00	Introduction - Welcome - Identification of participants - Scope and Objectives of meeting - Procedures to be followed - Review of agenda	ALL PARTIES
	- Identification of Representatives to prepare summary	ALL PARTIES
9:00 - 9:15	OVERVIEW OF PAST NRC ISSUES AND COMMENTS	NRC
9:15 - 9:45	OVERVIEW OF ESF OBJECTIVES & SCHEDULE	SRPO
9:45 - 10:00	BREAK	
10:00 - 10:30	CURRENT ESF/RESPOSITORY PHYSICAL INTERFACE	SRPO
10:30 - 11:30	OVERVIEW TITLE I ESF DESIGN	PB/PB-KBB
11:30 - 12:30	STATUS OF ESF TITLE II DESIGN o Basis for design o Current Design Trends + Hoisting + Underground Layout + Shaft Testing	ONWI
12:30 - 1:30	LUNCH	

1:30 - 2:00	REPRESENTATIVENESS OF ESF SITE o Regional Geology o Random Sample o Verified By Testing	ONWI
2:00 - 2:30	EXPLORATORY SHAFT LOCATION SELECTION o Selection Criteria o Conclusions	SRPO
2:30 - 3:00	CAUCUS TIME	ALL PARTIES
3:00 - 3:30	PRESENTATION OF PRELIMINARY OBSERVATIONS ON PRESENTATION	ALL PARTIES
	DISCUSSION OF PRELIMINARY OBSERVATIONS ON PRESENTATION	ALL PARTIES
	IDENTIFICATION OF TOPICS FOR FURTHER DISCUSSION	ALL PARTIES
3:30 - 5:30	EXPLORATORY SHAFT FREEZING, LINING AND OPERATIONAL SEAL DESIGN o Design Requirements o Shaft Freezing o Shaft Excavation o Shaft Lining and Seal Design o Shaft Lining and Seal Placement	PB/PB-KBB
5:30 - 6:00	CAUCUS	ALL PARTIES

DAY TWO

8:30 - 9:00	PRESENTATION OF PRELIMINARY OBSERVATIONS ON PRESENTATION	NRC
9:00 - 9:30	DISCUSSION OF PRELIMINARY OBSERVATIONS ON PRESENTATION	ALL PARTIES
9:30 - 10:00	IDENTIFICATION OF TOPICS FOR FURTHER DISCUSSION	ALL PARTIES
10:00 - 10:15	BREAK	
10:15 - 10:30	DESIGN VALIDATION TESTING o Operational Seal Monitoring o In-shaft Testing for Design Input Validation	PB/PB-KBB

10:30 - 11:00	ESF A-E QUALITY ASSURANCE PROGRAM FOR ESF DESIGN	PB/PB-KBB
11:00 - 12:00	CAUCUS	ALL PARTIES
12:00 - 1:00	LUNCH	
1:00 - 2:00	PRESENTATION OF PRELIMINARY OBSERVATIONS ON PRESENTATION	ALL PARTIES
2:00 - 3:00	DISCUSSION OF PRELIMINARY OBSERVATIONS ON PRESENTATION	ALL PARTIES
3:00 - 4:00	IDENTIFICATION OF TOPICS FOR FURTHER DISCUSSION	ALL PARTIES
	ADJOURN	

DAY THREE

8:30 - 12:00	PREPARE SUMMARY MEETING NOTES	IDENTIFIED REPRESENTATIVES
12:00 - 1:00	LUNCH	
1:00 - 5:00	RECONVENE AND FINALIZE SUMMARY MEETING NOTES (EXTEND TO NEXT DAY AS REQUIRED)	IDENTIFIED REPRESENTATIVES

INTRODUCTION

- o Welcome
- o Identification of participants
- o Scope and objectives of meeting
- o Procedures to be followed
- o Review of agenda
- o Identification of representatives to prepare summary.

MEETING OBJECTIVE

- Overview the Title I ESF Design and Title II status
- Present selected Title II topics
- Identification of subsequent meeting issues
- Solicit and discuss NRC/State/Tribes observations on information presented
- Agree on follow-up actions.

NRC LIBRARY

DOCUMENTS ALREADY IN HOUSTON

1. 30% DESIGN DRAWINGS (TITLE II)
2. 30% DESIGN SPECIFICATIONS (TITLE II)
3. DRAFT TESTING INTERFACE SPECIFICATION (TIS)
4. DRAFT U/G TEST PLAN (2/86)
5. SHAFT DESIGN GUIDE (2/87)
6. SYNTHETIC DATA BASE (BASELINED)
7. ESF FLEXIBILITY ANALYSIS (3/87)
8. DETAILED DESIGN CRITERIA

DOCUMENTS TO BE SENT

1. HOIST RECOMMENDATION STUDY
2. ESF/REQUIREMENTS DOCUMENT REV. 3a
3. SITE POPULATION STUDY
4. APPENDIX E - GENERIC REQUIREMENT FOR ESF
5. TITLE I DRAWING AND DESIGN REPORT

OVERVIEW OF ESF OBJECTIVES AND SCHEDULE

BY

SRPO

NRC/SRPO MEETING
ON ESF DESIGN
HOUSTON, TEXAS
MAY 5-7, 1987

NWPA REQUIREMENTS

"CONDUCT SITE CHARACTERIZATION ACTIVITIES IN A MANNER THAT MINIMIZES ANY SIGNIFICANT ADVERSE ENVIRONMENTAL IMPACTS IDENTIFIED...."
(NWPA SEC 113(a))

PURPOSE OF EXPLORATORY SHAFT FACILITY (ESF)

- TO PROVIDE ACCESS TO THE REPOSITORY HORIZON TO PERMIT IN SITU TESTING FOR THE FOLLOWING DATA NEEDS:
  - VERIFICATION OF SALT REPOSITORY DESIGN PARAMETERS AND VALIDATION OF PERFORMANCE ASSESSMENT MODELS
  - DEMONSTRATION OF THE COSNTRUCTIBILITY AND CONFIRMATION OF THE ESF DESIGN
  - DEMONSTRATION OF CAPABILITY TO SEAL PENETRATION INTO SALT

PB/PB-KBB
DESIGN PROCESS & SCHEDULE

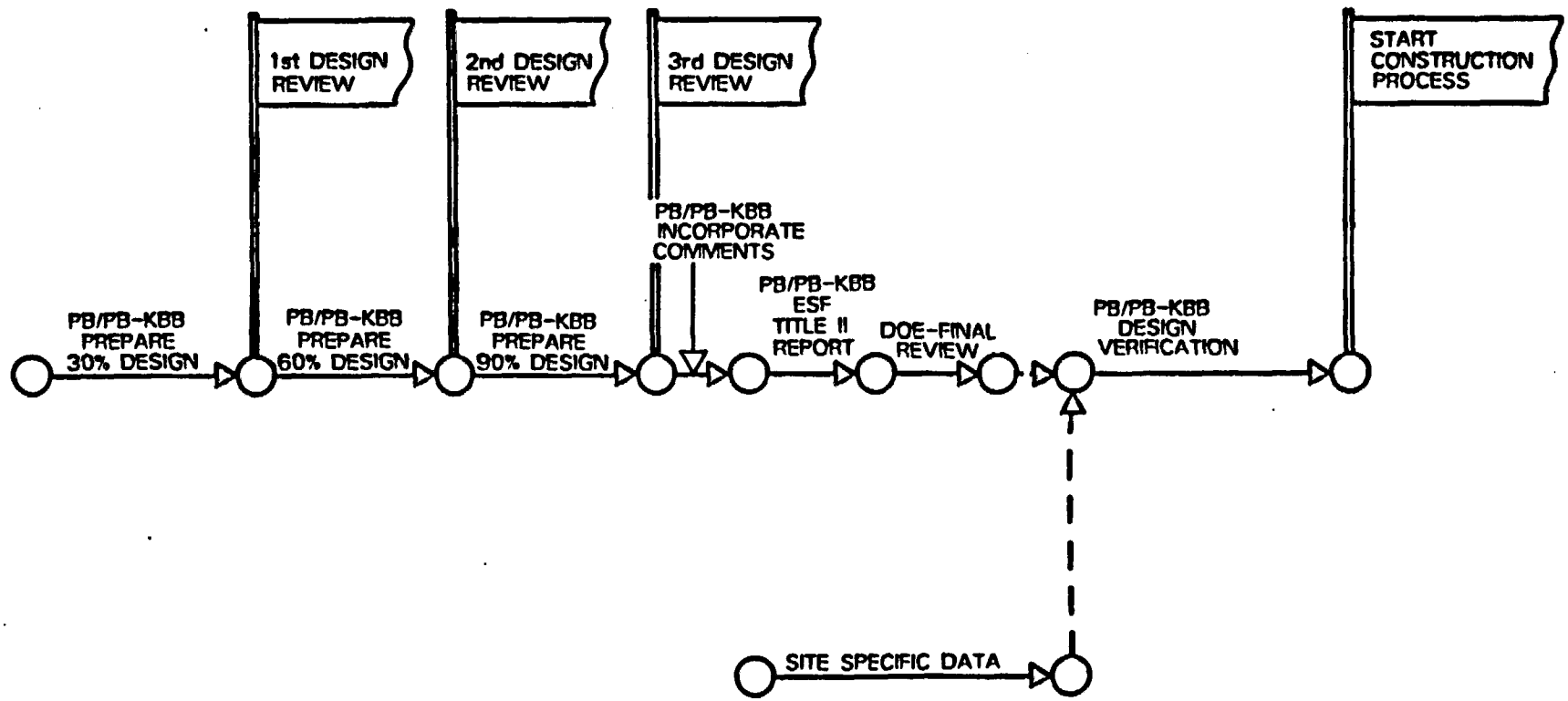

LOGIC DIAGRAM (NOT TO TIMESCALE)

CURRENT ESF/REPOSITORY PHYSICAL INTERFACE

BY

SRPO

NRC/SRPO MEETING
ON ESF DESIGN
HOUSTON, TEXAS
MAY 5-7, 1987

ESF/REPOSITORY INTERFACE

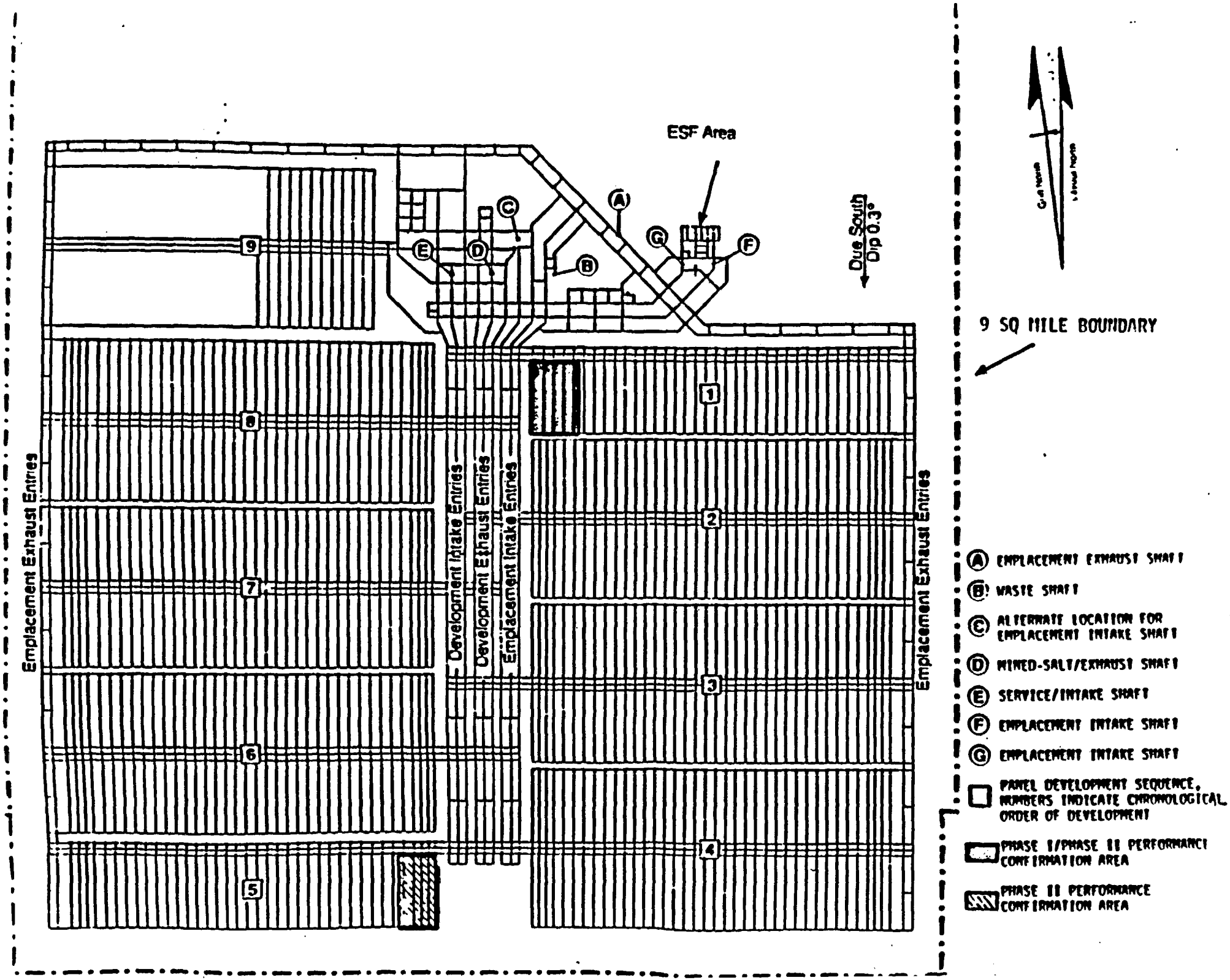
ESF Area
Due South
Dip 0.3°
9 SQ MILE BOUNDARY
Emplacement Exhaust Entries
Development Intake Entries
Development Exhaust Entries
Emplacement Intake Entries
Emplacement Exhaust Entries
1
2
3
4
5
6
7
8
9
A
B
C
D
E
F
G
A EMPLACEMENT EXHAUST SHAFT
B WASTE SHAFT
C ALTERNATE LOCATION FOR EMPLACEMENT INTAKE SHAFT
D MINED-SALT/EXHAUST SHAFT
E SERVICE/INTAKE SHAFT
F EMPLACEMENT INTAKE SHAFT
G EMPLACEMENT INTAKE SHAFT
PANEL DEVELOPMENT SEQUENCE, NUMBERS INDICATE CHRONOLOGICAL ORDER OF DEVELOPMENT
PHASE I/PHASE II PERFORMANCE CONFIRMATION AREA
PHASE II PERFORMANCE CONFIRMATION AREA

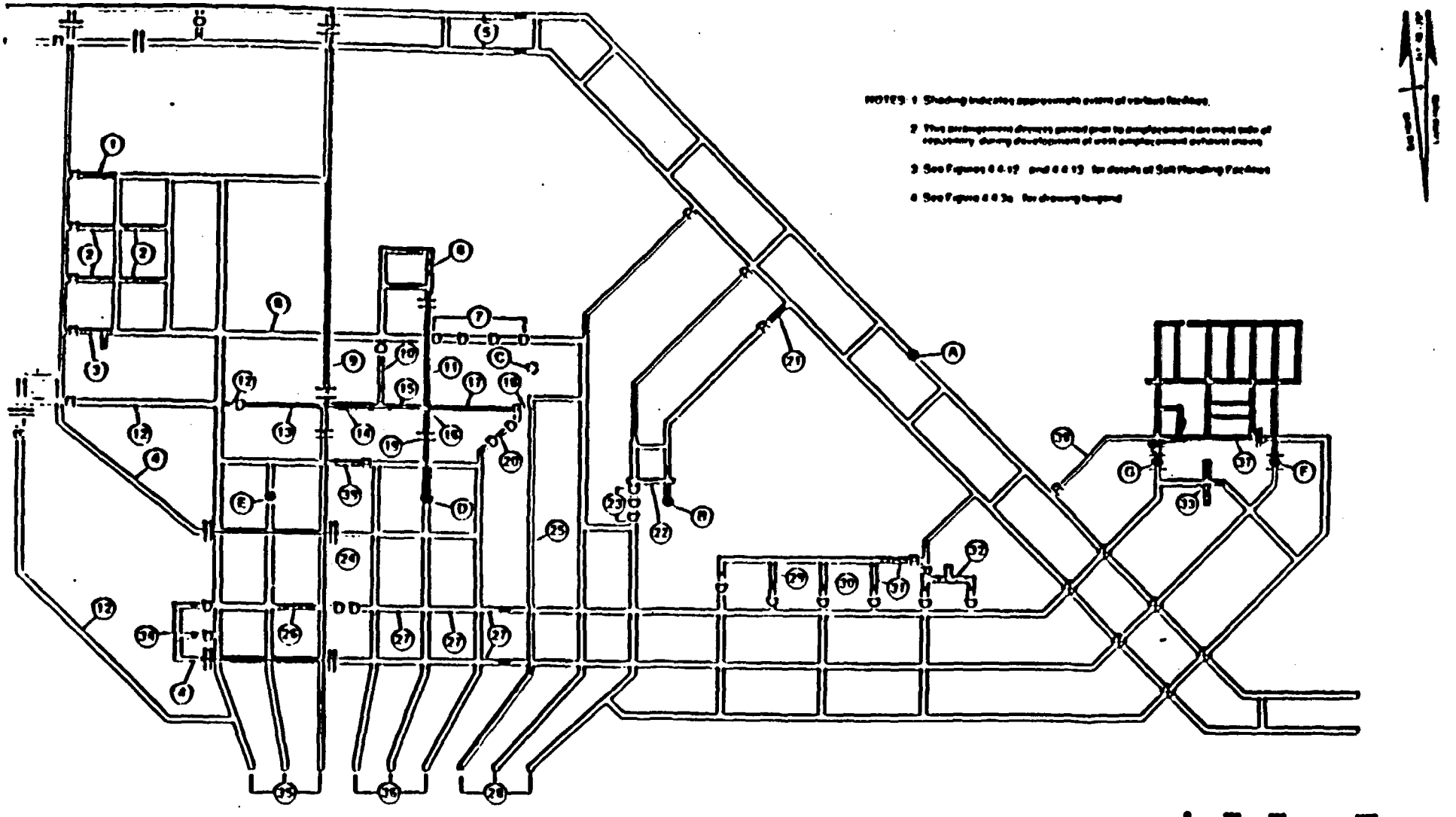

NOTES: 1 Shading indicates approximate extent of various facilities.

2 This arrangement diagram permits great flexibility in complex cement on most side of requisitioning during development of work complex cement surface shaft.

3 See Figures 6.4.12 and 6.4.13 for details of Soil Handling Facilities

4 See Figure 6.4.3a for drawing legend

Scale: 0 250 500 1000 Feet

SHAFT PILLAR ARRANGEMENT

FIGURE 6.4.3

E.1,707,000
E.1,708,000
E.1,709,000
E.1,710,000
E.1,711,000
E.1,712,000
E.1,713,000
E.1,714,000
SALT PILE
SURFACE POND
STORM WATER POND
GRID NORTH

ORGANIZATIONAL OVERVIEW OF INTERFACE CONTROL

- ORGANIZATIONAL - BOTH A/E'S REPORT TO SRPO ANALYSIS AND EVALUATION DIVISION

- INTERFACE CONTROL WORKING GROUP

  - ADVISORY GROUP TO ANALYSIS AND EVALUATION DIVISION
  - MEMBERS:
    - FLUOR-MK
    - PARSONS BRINCKERHOFF/PB-KBB
    - PARSONS-REDPATH
    - ONWI
    - GOLDER

- ACTIVITIES

  - ESF DESIGN REVIEWS
  - SRP BASELINE CONTROL SYSTEM
  - REQUIREMENTS DOCUMENT INTERFACES
  - SHAFT DESIGN GUIDE
  - MONTHLY MANAGEMENT REVIEWS
  - TECHNICAL COMMUNICATIONS

OVERVIEW OF TITLE I

ESF DESIGN

BY

PARSONS BRINCKERHOFF/PB-KBB

NRC/SRPO MEETING
ON ESF DESIGN
HOUSTON, TEXAS
MAY 5-7, 1987

EXPLORATORY SHAFT FACILITY

DEAF SMITH SITE

DEAF SMITH COUNTY, TEXAS

DE-AC97-86WM 46664

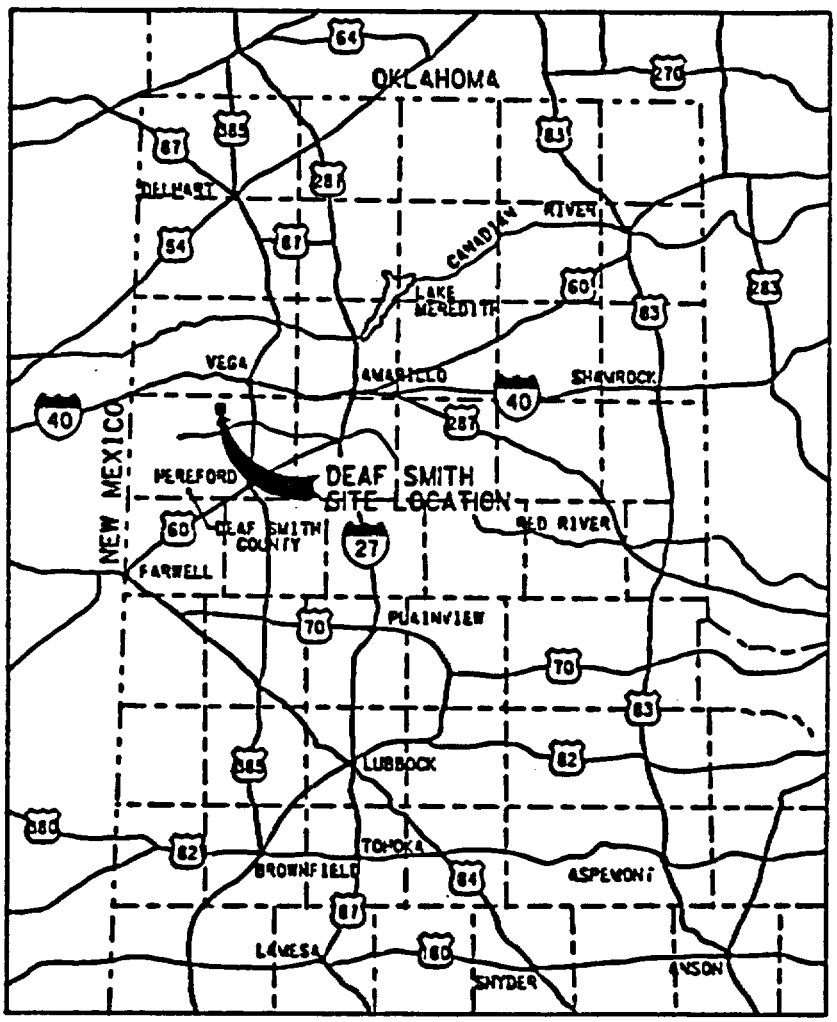

VICINITY MAP

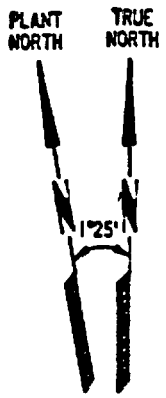

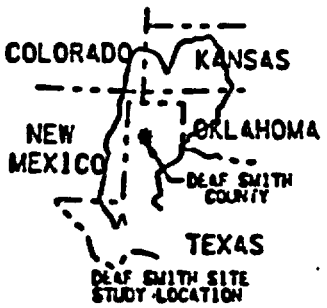

PB/PB-KBB MAY 1987

PB/PB-KBB

STRATIGRAPHY

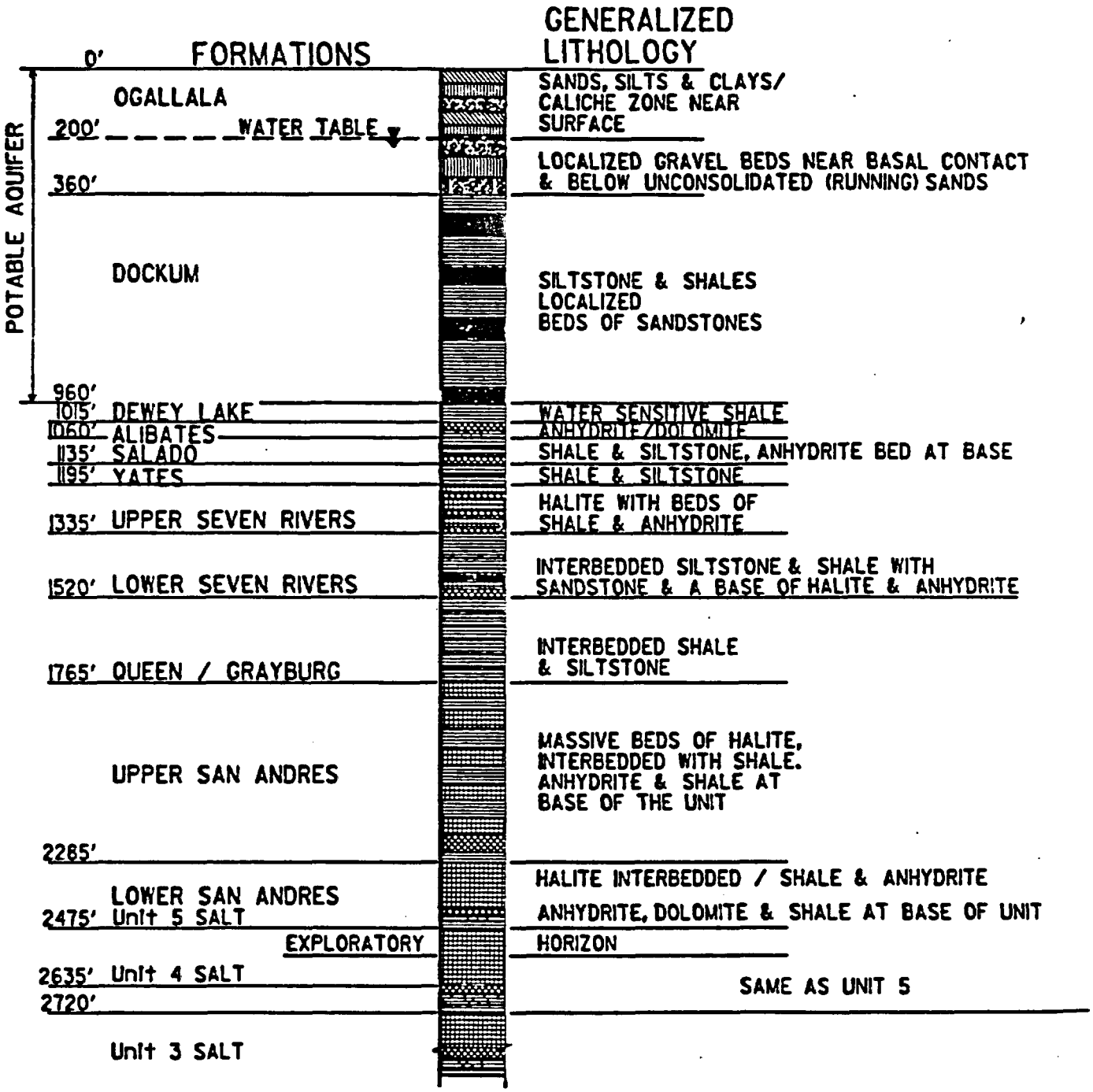

PB/PB-KBB MAY 1987

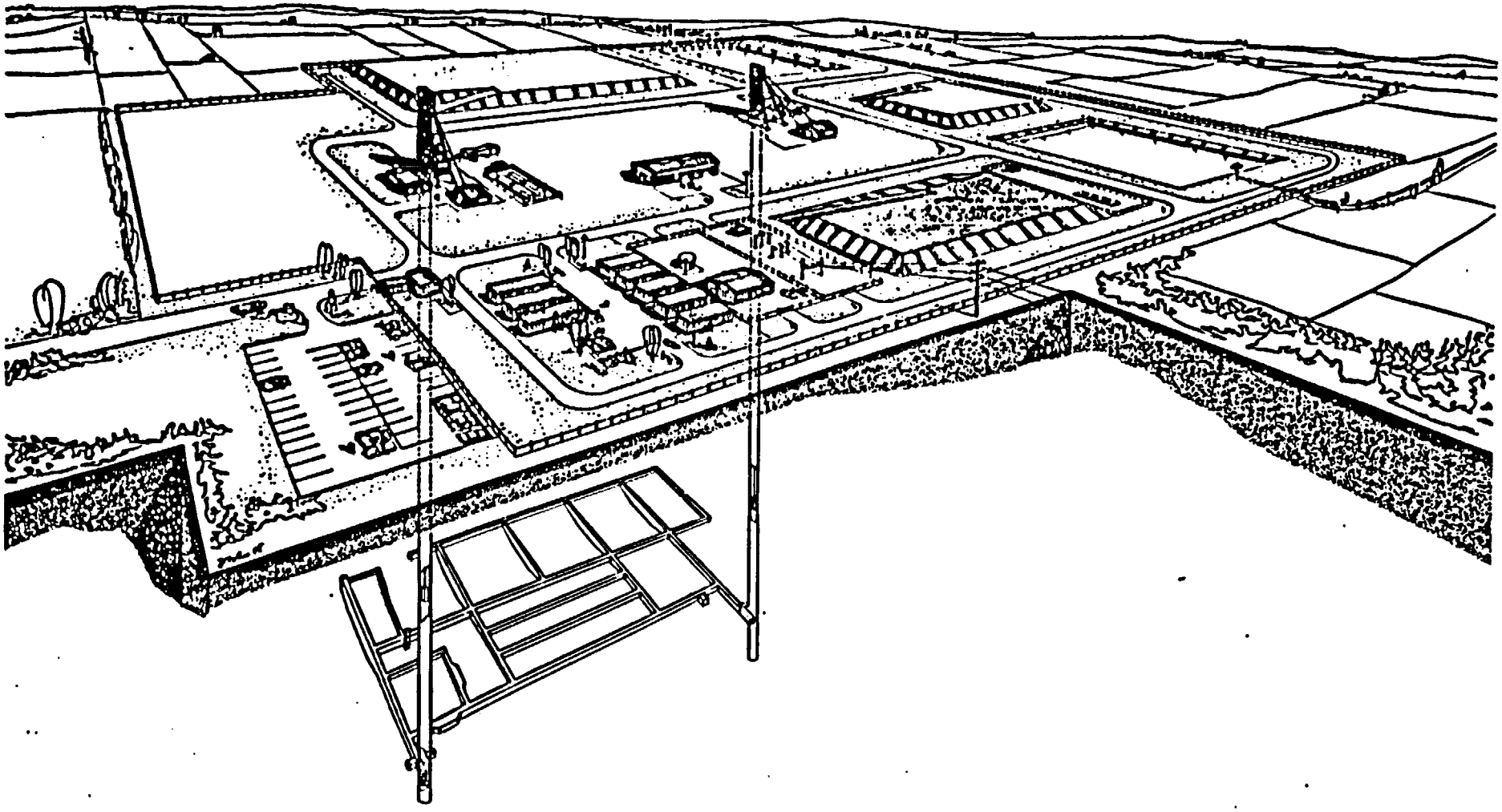

PB/PB-KBB MAY 1987

SCHEMATIC FREEZE HOLE SCHEDULE RELATIVE TO LITHOLOGY

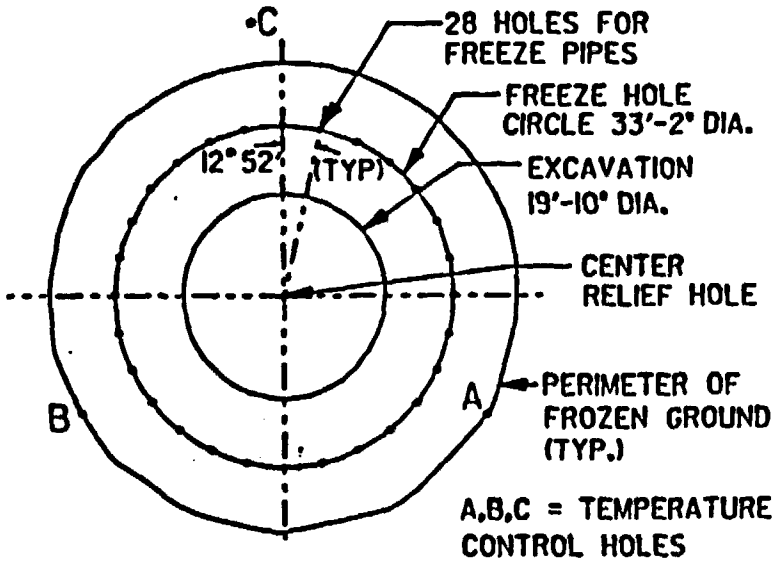

PLAN VIEW

FREEZE HOLES & TEMPERATURE CONTROL HOLES

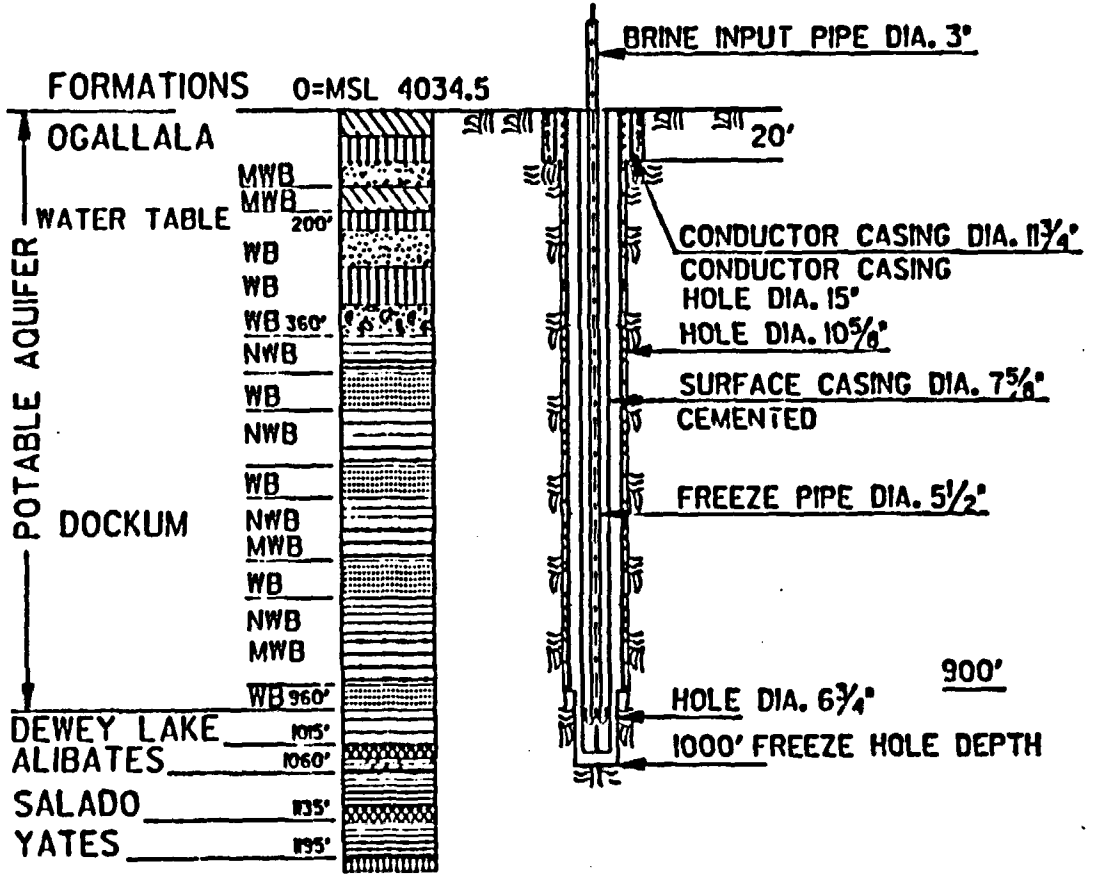

LEGEND

NWB – NON-WATER BEARING
MWB – MINOR-WATER BEARING
WB – WATER BEARING

PB/PB-KBB MAY 1987

SCHEMATIC FREEZE PLANT SYSTEM

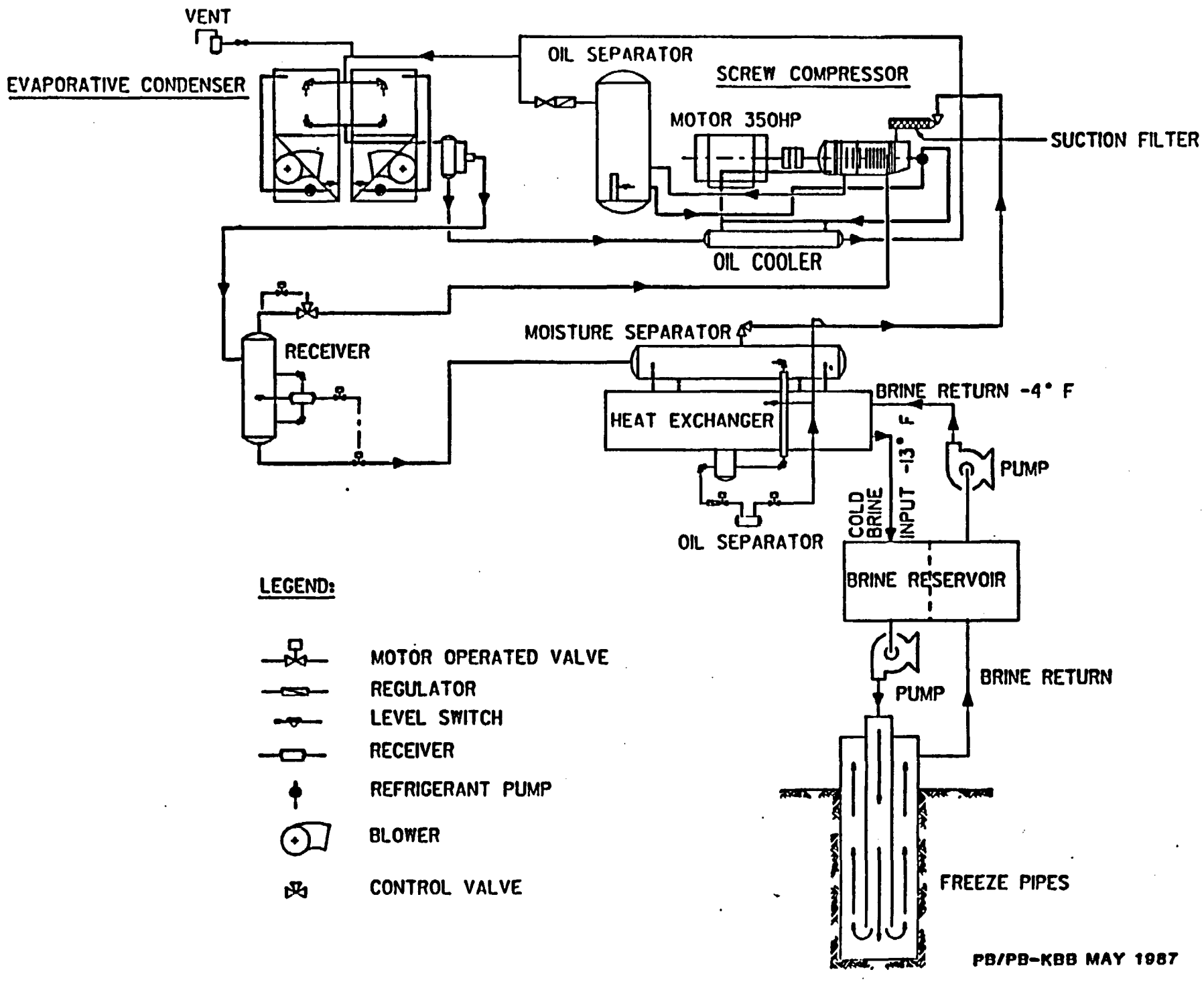

PB/PB-KBB MAY 1987

SHAFT CONSTRUCTION SEQUENCE

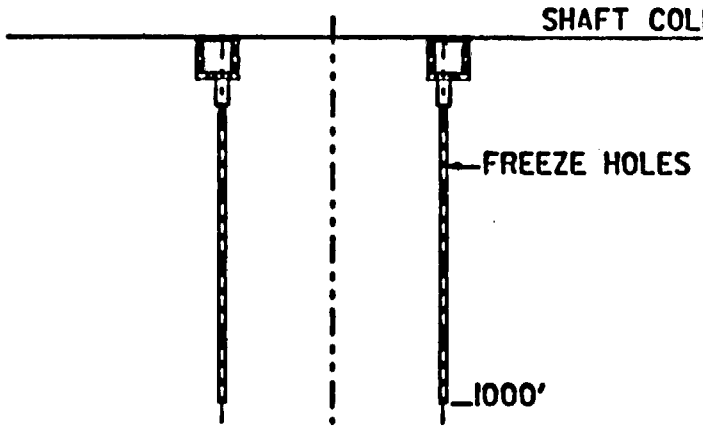

SHAFT 1 & SHAFT 2

1.) CONSTRUCT FREEZE CELLAR & DRILL PAD. DRILL FREEZE HOLES & TEMPERATURE CONTROL HOLES TO 1000'.

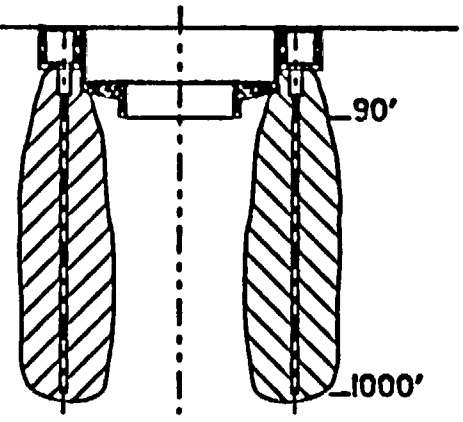

SHAFT 1 & SHAFT 2

2.) FREEZE THE UNCONSOLIDATED FORMATIONS. CONSTRUCT SHAFT COLLAR TO 90'.

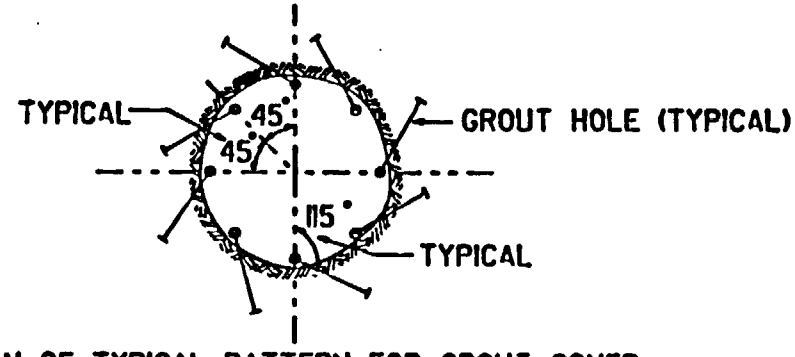

PLAN OF TYPICAL PATTERN FOR GROUT COVER HOLES IF REQUIRED, ILLUSTRATING 115° SPIN. ADDITIONAL HOLES AS REQUIRED.

PB/PB-KBB MAY 1987

SHAFT CONSTRUCTION SEQUENCE

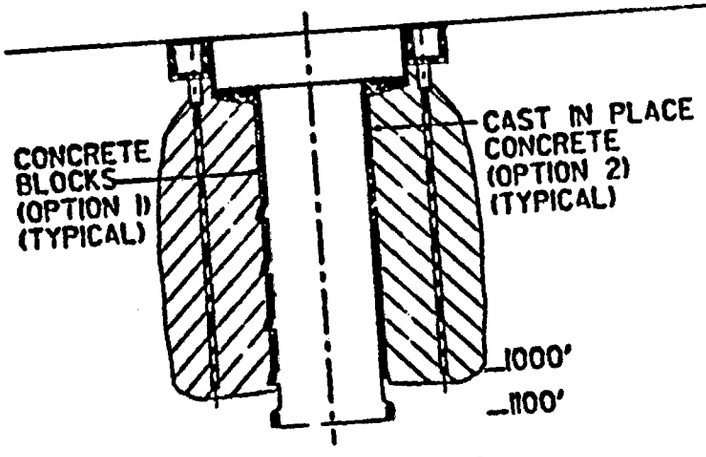

SHAFT 1 & SHAFT 2

3.) SINK SHAFT FROM 90' TO 1100'. LINE WITH PRELIMINARY CONCRETE OR CONCRETE BLOCKS 90' TO 1100'.

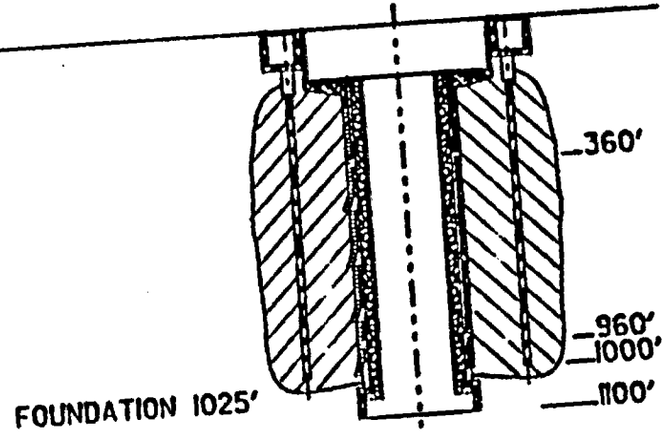

SHAFT 1 & SHAFT 2

4.) CONSTRUCT FOUNDATION AT 1025'; NOTE 3 INSTALL FINAL LINING 1025' TO SURFACE. INTERRUPT PRELIMINARY LINING AT 360' & 960' FOR ASPHALT SEAL (TYP)

PB/PB-KBB MAY 1987

SHAFT CONSTRUCTION SEQUENCE

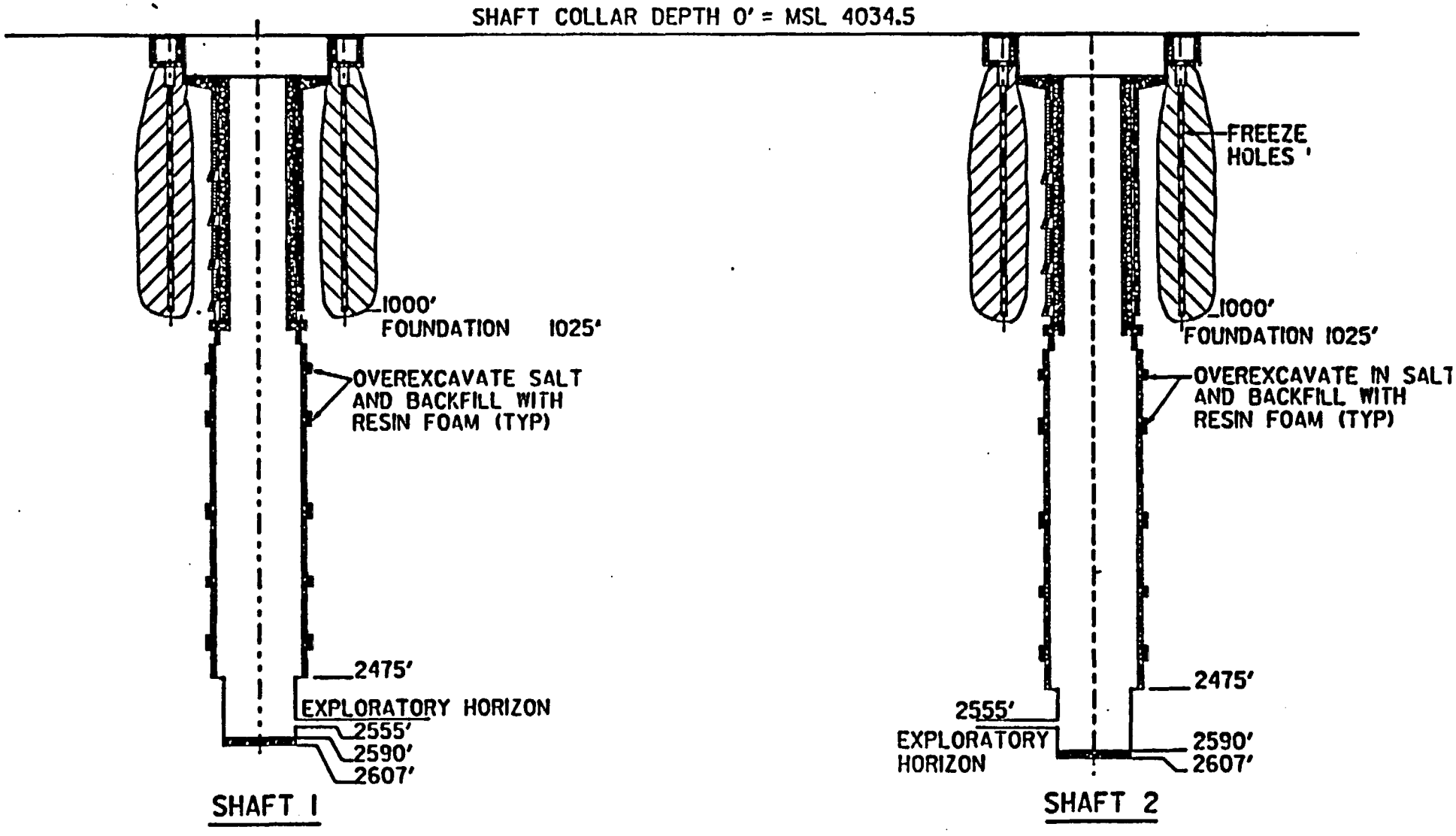

5.) DISCONTINUE FREEZE OPERATION.
SINK SHAFT TO 2607', LINE WITH PRELIMINARY CONCRETE TO 2475'. ROCKBOLTS & WIREMESH 2475' TO 2607'. EXCAVATE EXPLORATORY STATION, INSTALL CONCRETE SHAFT PLUG.

PB/PB-KBB MAY 1987

SHAFT CONSTRUCTION SEQUENCE

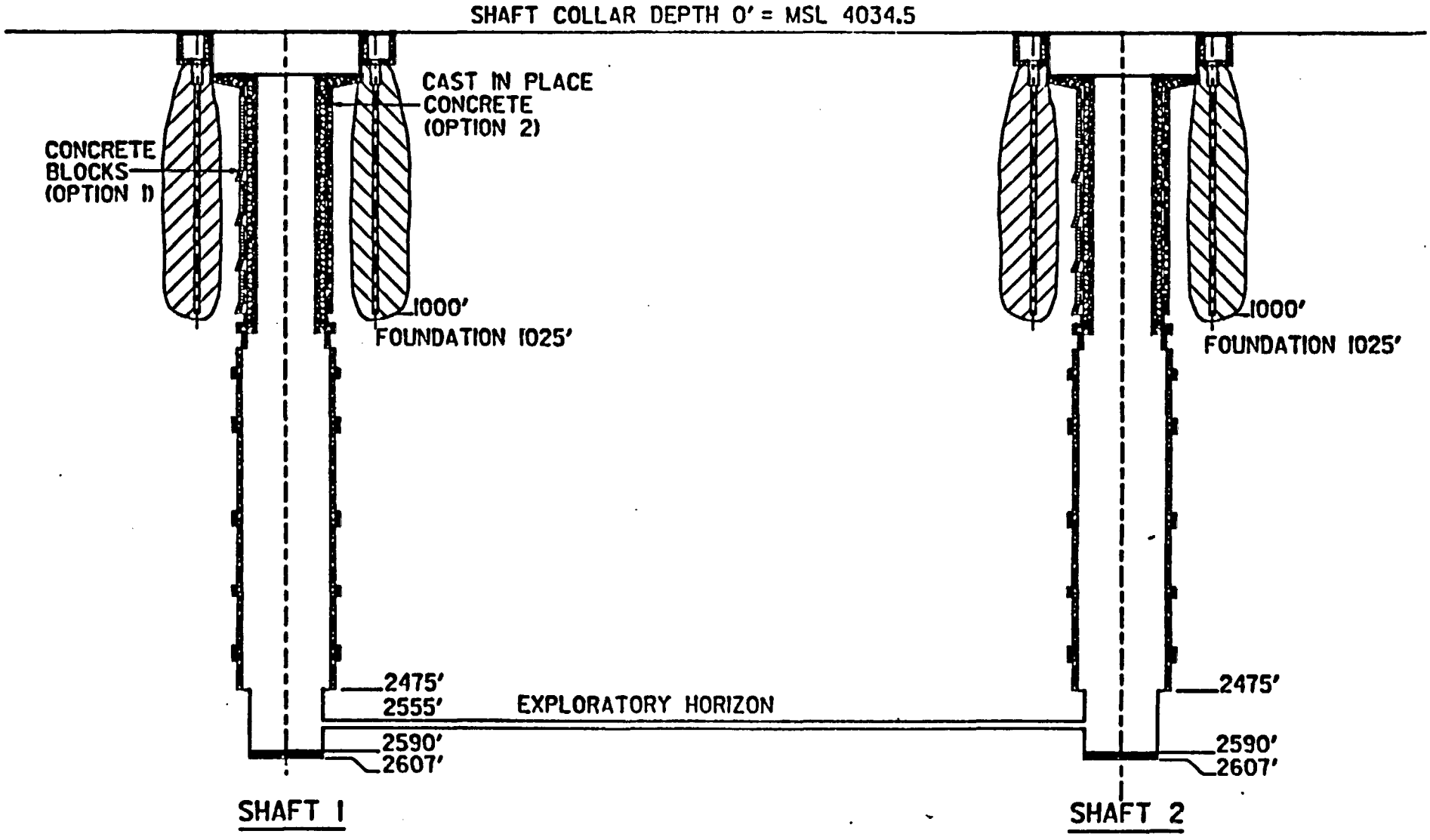

6.) EXCAVATE CONNECTION BETWEEN SHAFT

PB/PB-KBB MAY 1987

SHAFT CONSTRUCTION SEQUENCE

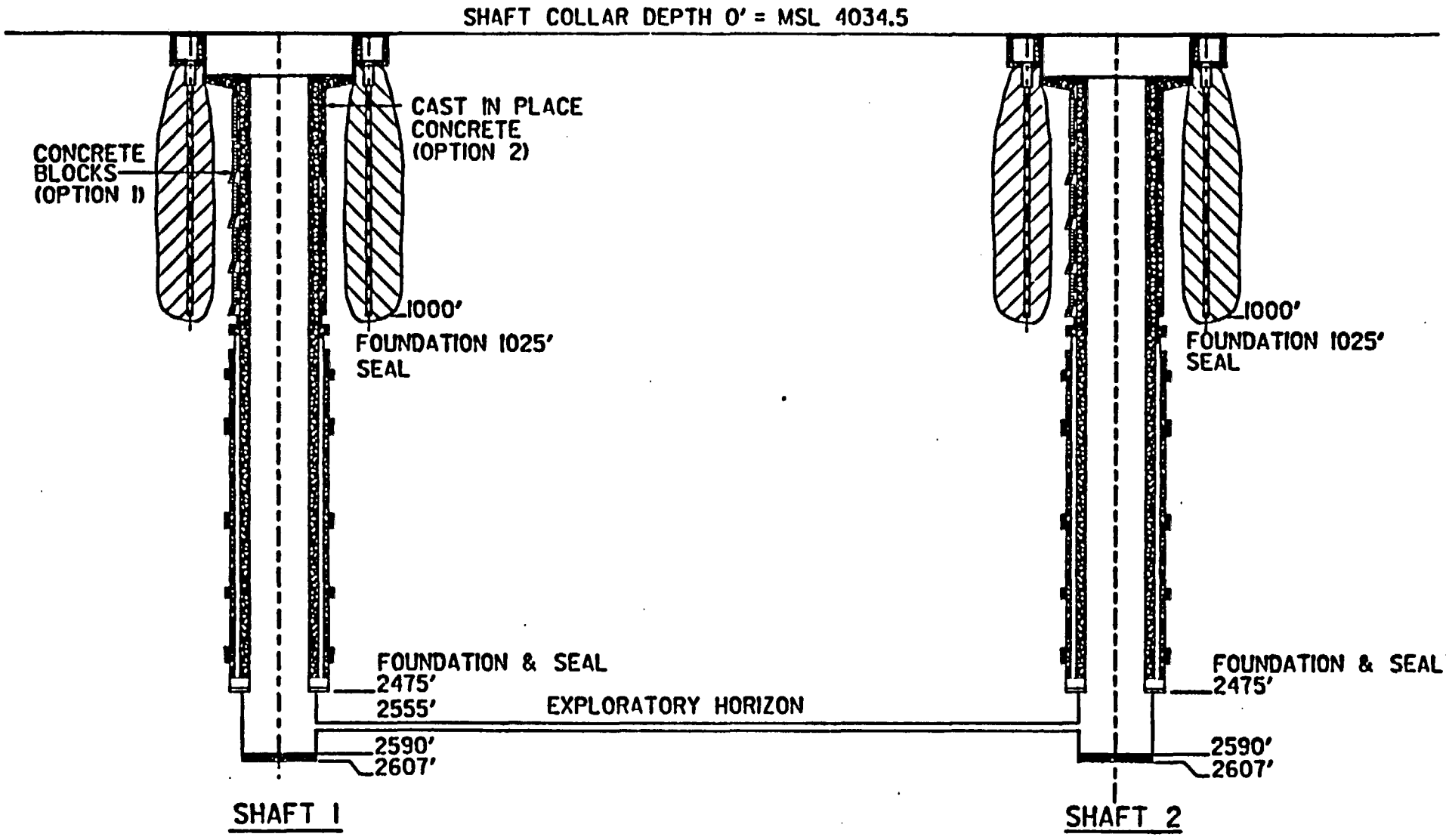

7.) CONSTRUCT FOUNDATION & SEAL. AT 2475'
INSTALL FINAL LINING 2475' TO 1025'
INSTALL SEAL AT 1025'. NOTE 3
ABANDON FREEZE HOLES BY REMOVING
BRINE FROM PIPES, PERFORATING PIPES
AND FILLING WITH CEMENT GROUT.

PB/PB-KBB MAY 1987

SHAFT 1&2

STRATIGRAPHY

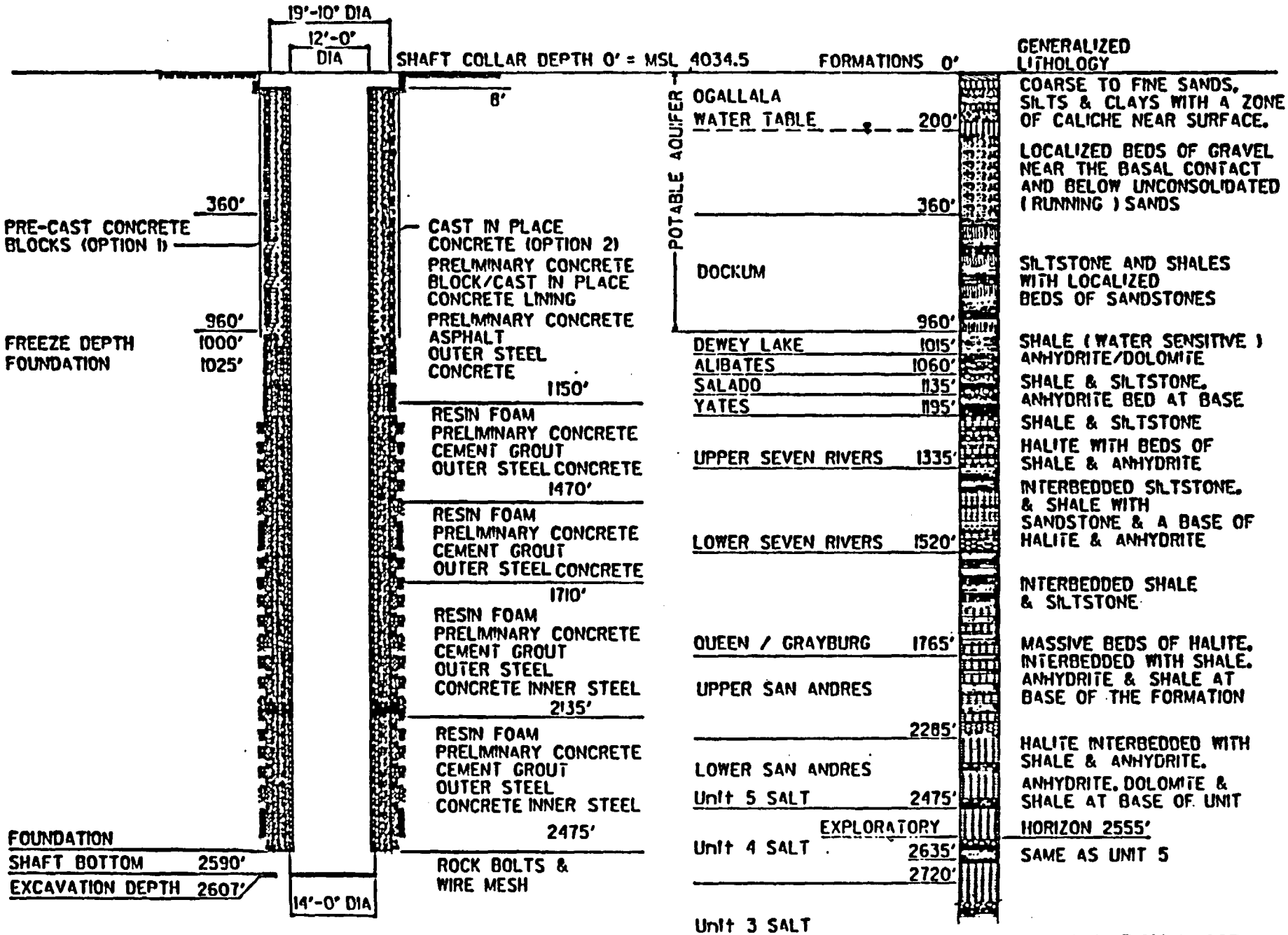

PB/PB-KBB MAY 1987

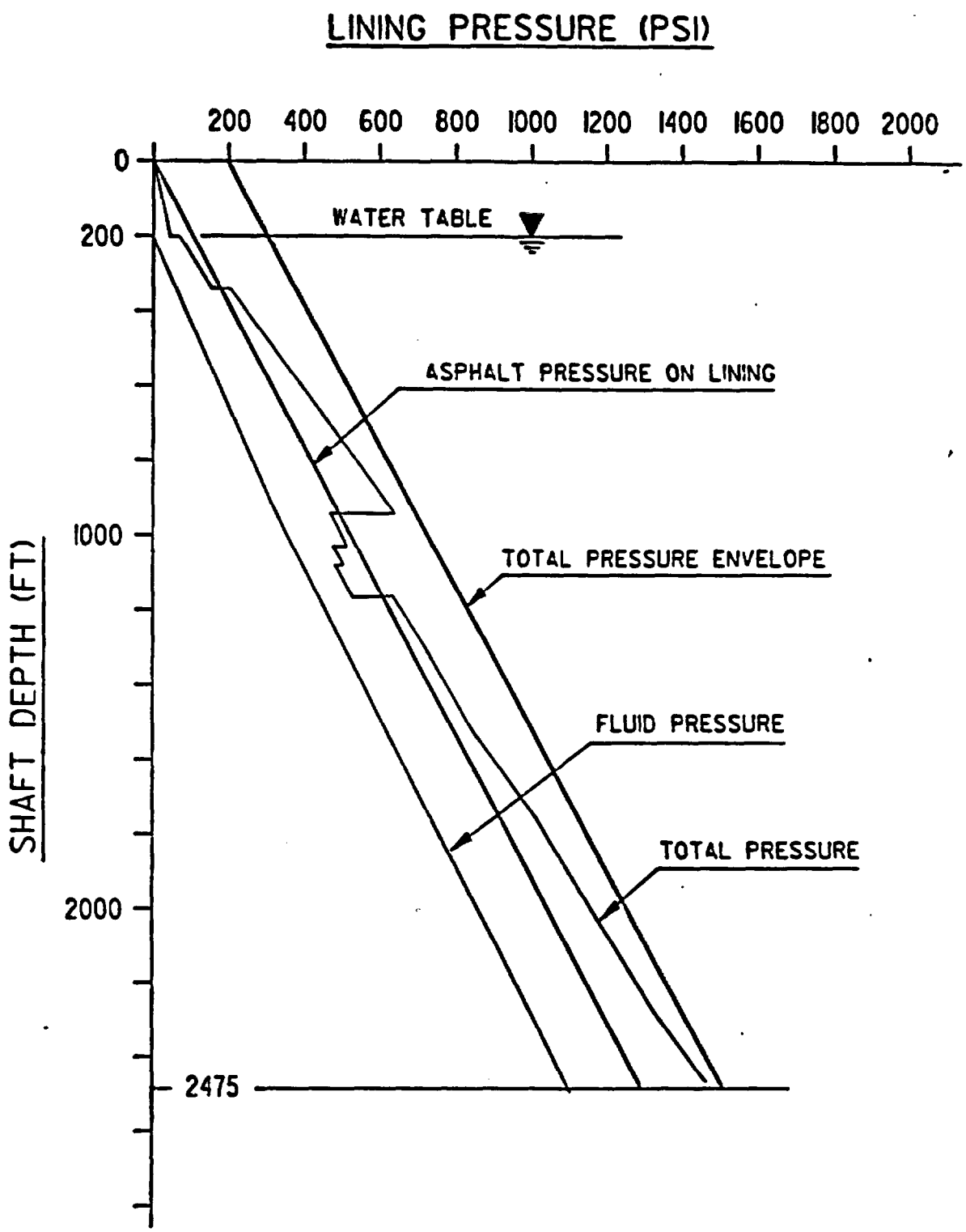

NOTE:

1. TOTAL PRESSURE ROCK/SOIL PRESSURE + FLUID PRESSURE.

2. THE TOTAL PRESSURE ENVELOPE=ASPHALT PRESSURE ON LINING + ALLOWABLE PRESSURE ON PRELIMINARY LINING.

PB/PB-KBB MAY 1987

SHAFT LINING

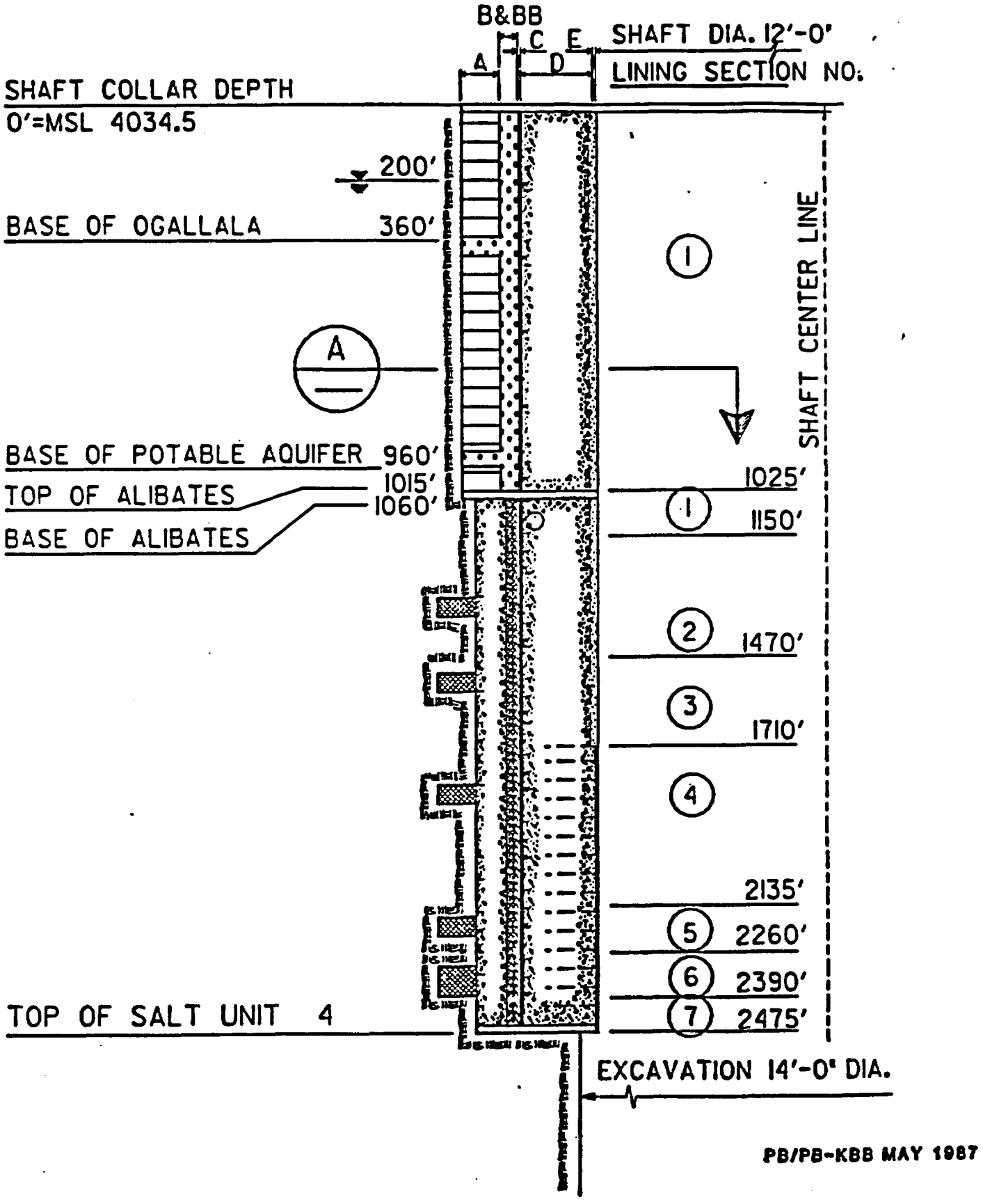

PB/PB-KBB MAY 1987

SECTION A

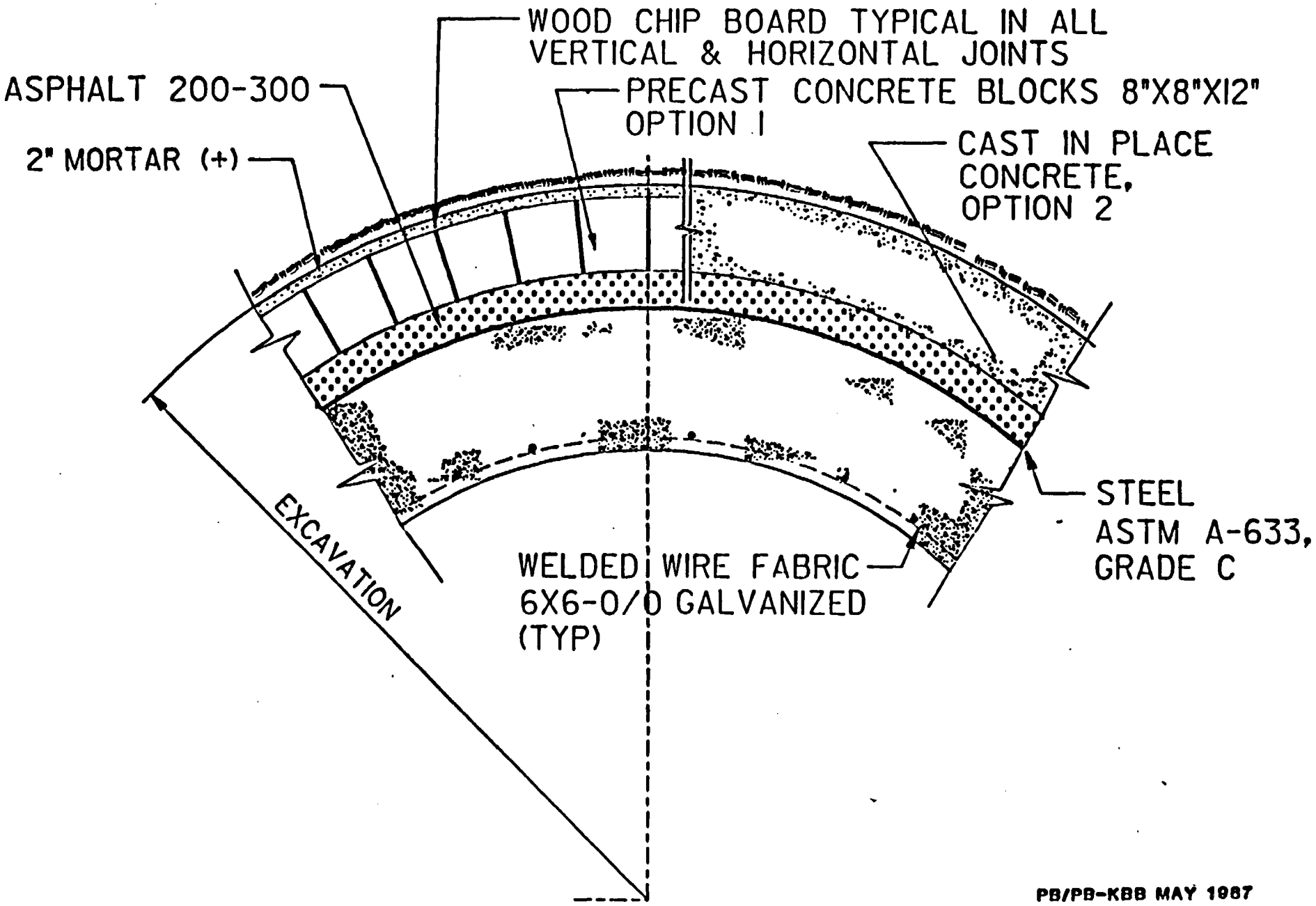

PB/PB-KBB MAY 1987

SHAFT LINING SCHEDULE

UPPER LINING SECTION

DEPTH INTERVAL (FT)	LINING SECTION No.	A (NOTE 4) PRELIMINARY CONCRETE (INCH)	B ASPHALT 200-300 (INCH)	C OUTER STEEL THICKNESS (INCH)	D CONCRETE THICKNESS (INCH)	E INNER STEEL THICKNESS (INCH)
8-1025	1	12/10	6	0.5	25.5	—

LOWER LINING SECTION

DEPTH INTERVAL (FT)	LINING SECTION No.	A PRELIMINARY CONCRETE (INCH)	BB (NOTE 5) SANDED CEMENT GROUT (INCH)	C OUTER STEEL THICKNESS (INCH)	D CONCRETE THICKNESS (INCH)	E INNER STEEL THICKNESS (INCH)
1025-1150	1	10	4	0.625	25.5	—
1150-1470	2	10	4	0.625	25.5	—
1470-1710	3	10	4	0.625	25.5	—
1710-2135	4	10	4	0.625	24.75	1.0
2135-2260	5	10	4	0.625	24.5	1.25
2260-2390	6	10	4	0.625	24.25	1.375
2390-2475	7	10	4	0.625	24	1.625

PB/PB-KBB MAY 1987

FOUNDATION, SUPPORT RING & CHEMICAL SEAL

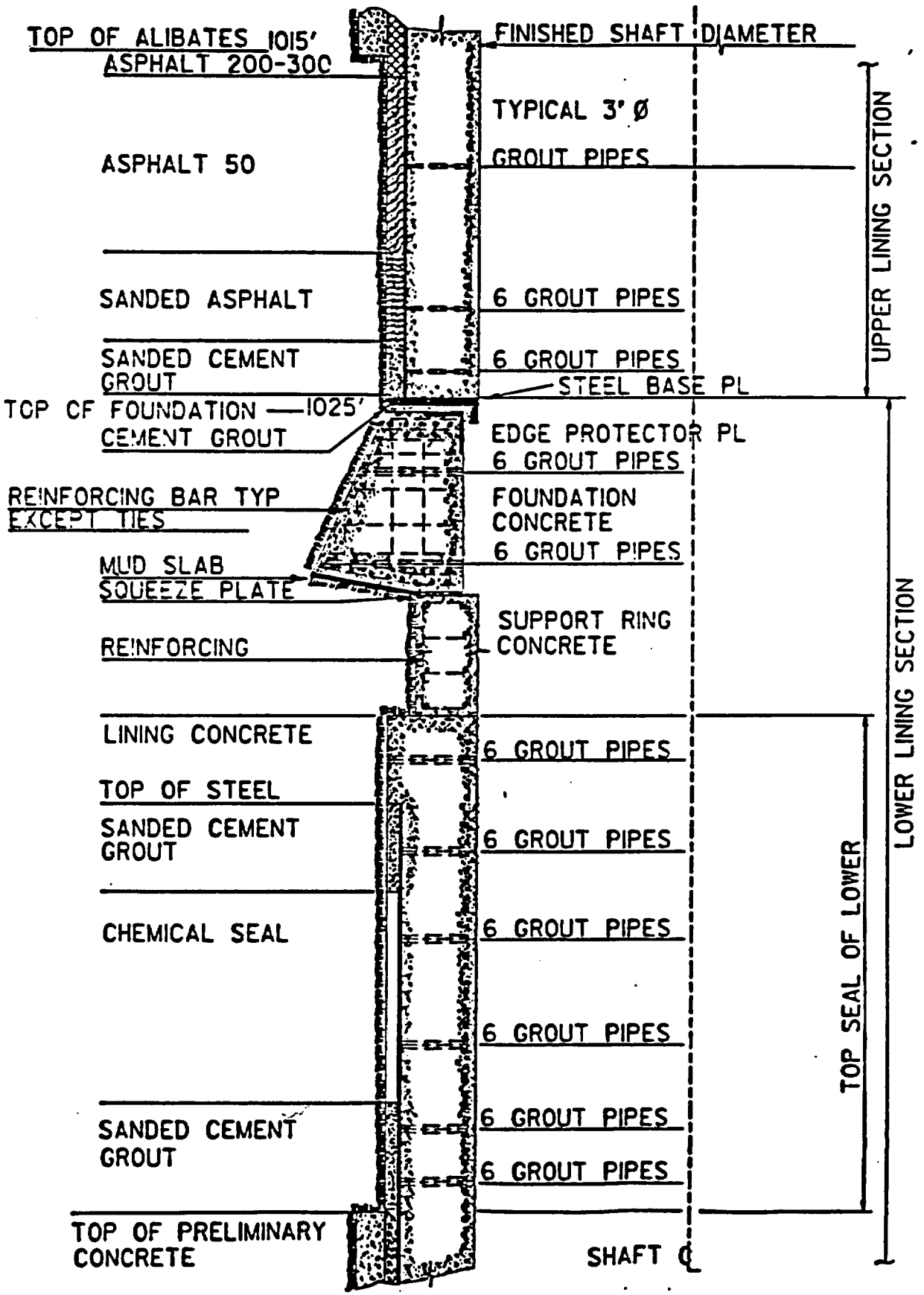

PB/PB-KBB MAY 1987

FOUNDATION, SUPPORT RING & CHEMICAL SEAL

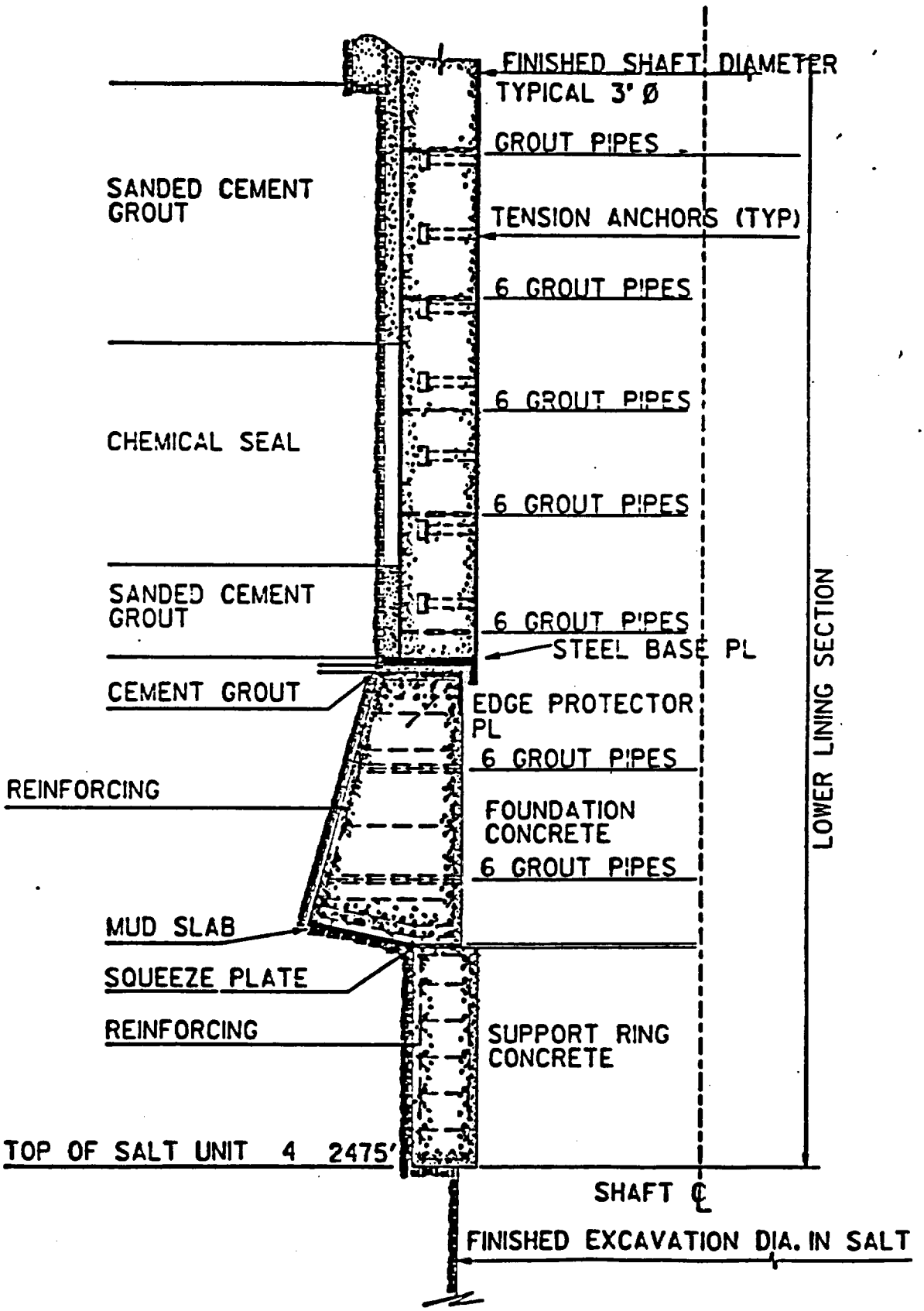

PB/PB-KBB MAY 1987

ESF DESIGN PROCESS

- CRITERIA PROVIDED BY DOE
- GATHERING OF BASIC DATA FROM PROJECT PARTICIPANTS
- LACK OF SITE-SPECIFIC INPUT DATA RESOLVED BY ENGINEERING JUDGEMENT USING MINING PROJECTS SIMILAR TO THE ESF AS BASIS FOR JUDGEMENT
- PRELIMINARY DESIGN AND OUTLINE SPECIFICATIONS INCLUDING IN-HOUSE REVIEWS
- DESIGN REVIEWS BY EXPERTS NOT DIRECTLY INVOLVED WITH DESIGN
- FINAL DESIGN PROCESS (TITLE II)

FUNCTIONAL CRITERIA

- ESF WILL BE DESIGNED TO FULFILL ITS INTENDED PURPOSE WHICH IS TO CHARACTERIZE SALT SITE BY SUBSURFACE TESTING
- DESIGN TO MINIMIZE ADVERSE IMPACTS TO ENVIRONMENT AND NOT DAMAGE THE SITE FOR A FUTURE REPOSITORY SHOULD THE SITE BE FOUND SUITABLE
- HEALTH AND SAFETY OF PUBLIC AND WORKERS BE AN IMPORTANT PARAMETER OF DESIGN
- SOUND ENGINEERING PRINCIPLES AND PRACTICES BE EMPLOYED
- DESIGN TO BE ECONOMICAL FOR CONSTRUCTION, OPERATION AND MAINTENANCE
- DESIGN TO BE IN ACCORDANCE WITH APPLICABLE FEDERAL, STATE AND LOCAL REGULATIONS, AND APPLICABLE NATIONAL CONSENSUS CODES AND STANDARDS

DESIGN BASIS

- LOCATION
  PERMIAN BASIN, DEAF SMITH COUNTY, TEXAS
- GEOLOGY
- GEOHYDROLOGY
- ROCK PROPERTIES
- FUNCTIONAL DESIGN CRITERIA
- FEDERAL, STATE AND LOCAL HEALTH AND SAFETY STANDARDS
- QUALITY ASSURANCE PLAN AND PROCEDURES
- ENGINEERING DESIGN PROCEDURES

FREEZING

- WHY
- HOW
- WHAT

ESF EXCAVATION

- IN FROZEN SECTION
- IN NON-FROZEN SECTION

SHAFT LINING

- TYPE
- PRESSURES ON LINING
- STABILITY

OPERATIONAL SEALS

- FROZEN SECTION
- NON-FROZEN SECTION
- EFFECTIVENESS

STATUS OF ESF TITLE II DESIGN

BY

ONWI

NRC/SRPO MEETING
ON ESF DESIGN
HOUSTON, TEXAS
MAY 5-7, 1987

BASIS FOR TITLE II DESIGN

- Appendix E - Generic Requirements for Exploratory Shaft Facility (ESF) design, construction, and operations. OGR/B-2, Rev. 2

- Salt Repository Project Requirements Document
  - Required by SRP Systems Engineering Management Plan

DOCUMENTS REFERENCED BY THE SRP REQUIREMENTS DOCUMENT

TITLE	PURPOSE	STATUS
SYNTHETIC DATA BASE	DEFINES REGIONAL DESIGN PARAMETERS	SRP BASELINE
UNDERGROUND TEST PLAN	RATIONALE AND JUSTIFICATION FOR UNDERGROUND TESTING	CLEARED FOR PUBLICATION
DETAILED DESIGN CRITERIA	DESIGN DETAIL THAT IMPLEMENTS THE RD (DEVELOPED BY PB/PB-KBB)	REV. 2
TESTING INTERFACE SPECIFICATION	DESIGN REQUIREMENTS TO IMPLEMENT THE UTP	REV. 3 BY JUNE
SAFETY BASES FOR DESIGN EVALUATION OF THE ESF	DEFINES: o DESIGN BASIS EVENTS o CLASSIFIES ESF COMPONENTS o ESTABLISHES DESIGN CONDITIONS o DETERMINE GRADED QA	ONWI DOCUMENT UNDER EXTERNAL REVIEW
SITE MANAGEMENT PLAN	ESTABLISHES SRPO FIELD POLICY AND DEFINES IMPLEMENTING RESPONSIBILITY	UNDER PREPARATION

DOCUMENTS REFERENCED IN THE RD (CONT'D)

TITLE	PURPOSE	STATUS
SHAFT DESIGN GUIDE	DETERMINE SHAFT DESIGN METHODOLOGY	COMPLETE, UNDER EXTERNAL PEER REVIEW
ESF FLEXIBILITY STUDY	STRATEGY TO EXPAND THE ESF TO PERFORM ADDITIONAL TEST IF REQUIRED	DRAFT, REV. 2
ESF POPULATION STUDY	ESTABLISHES THE POPULATION FOR THE DESIGN OF ESF COMPONENTS	FINAL DRAFT
ESF HOIST RECOMMENDATION	DETERMINES ESF MINE HOISTING REQUIREMENT	FINAL DRAFT
VULNERABILITY ASSESSMENT	PROVIDES DESIGN INPUT FOR ESF SECURITY FEATURES	DOCUMENT IN PROCESS.
PRELIMINARY SAFETY ANALYSIS REPORT (NON NUCLEAR)	IDENTIFIES INDUSTRIAL SAFETY ISSUES THAT CAN BE MITIGATED BY DESIGN FEATURES	DOCUMENT IN PROCESS. DESIGN INPUT DURING 30% DESIGN REVIEW

CURRENT DESIGN TRENDS

- ESF HOISTING SYSTEMS MAY BE USED FOR CONSTRUCTION, TESTING, AND OPERATIONS.
- UNDERGROUND LAYOUT MAY ACCOMMODATE EFFICIENT EXPANSION FOR ADDITIONAL TESTING (IF REQUIRED).
- UNDERGROUND LAYOUT AND VENTILATION ARE CONFIGURED TO AID DUST CONTROL.
- DESIGN VALIDATION AND SITE CHARACTERIZATION TESTING INSTRUMENTATION SYSTEMS HAVE BEEN INTEGRATED.
- SHAFT LINING BELOW 1000 FT CONFORMS TO CURRENT DATA BASE AND DRY SHAFT CRITERIA.

REPRESENTATIVENESS OF ESF SITE

BY

ONWI

NRC/SRPO MEETING
ON ESF DESIGN
HOUSTON, TEXAS
MAY 5-7, 1987

REPRESENTATIVENESS OF ESF SITE FROM A GEOTECHNICAL VIEWPOINT

1. REGIONAL GEOLOGY

   --Continuity within Palo Duro Basin allows extrapolation of known conditions to the site.

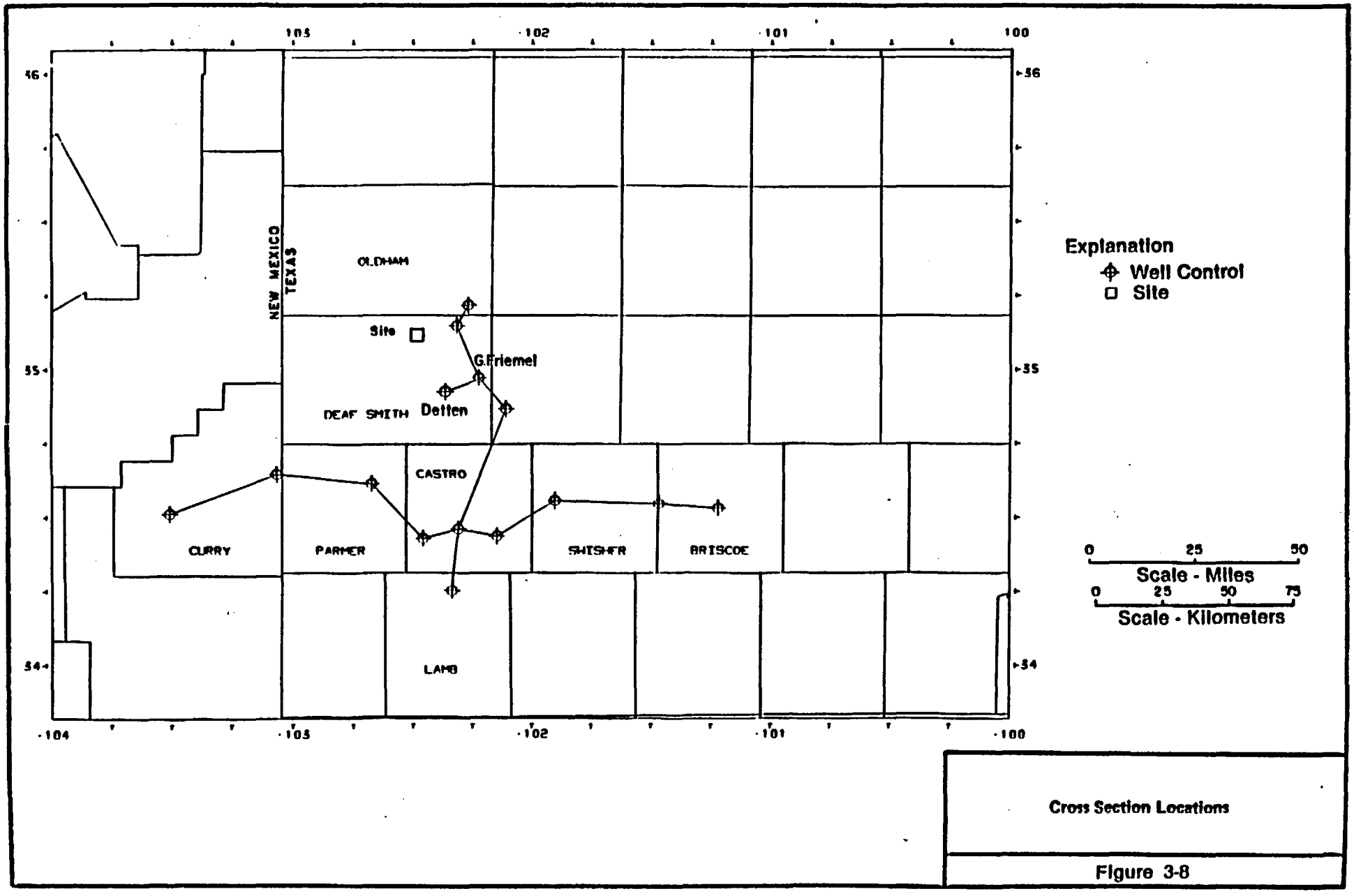

Cross Section Locations

Figure 3-8

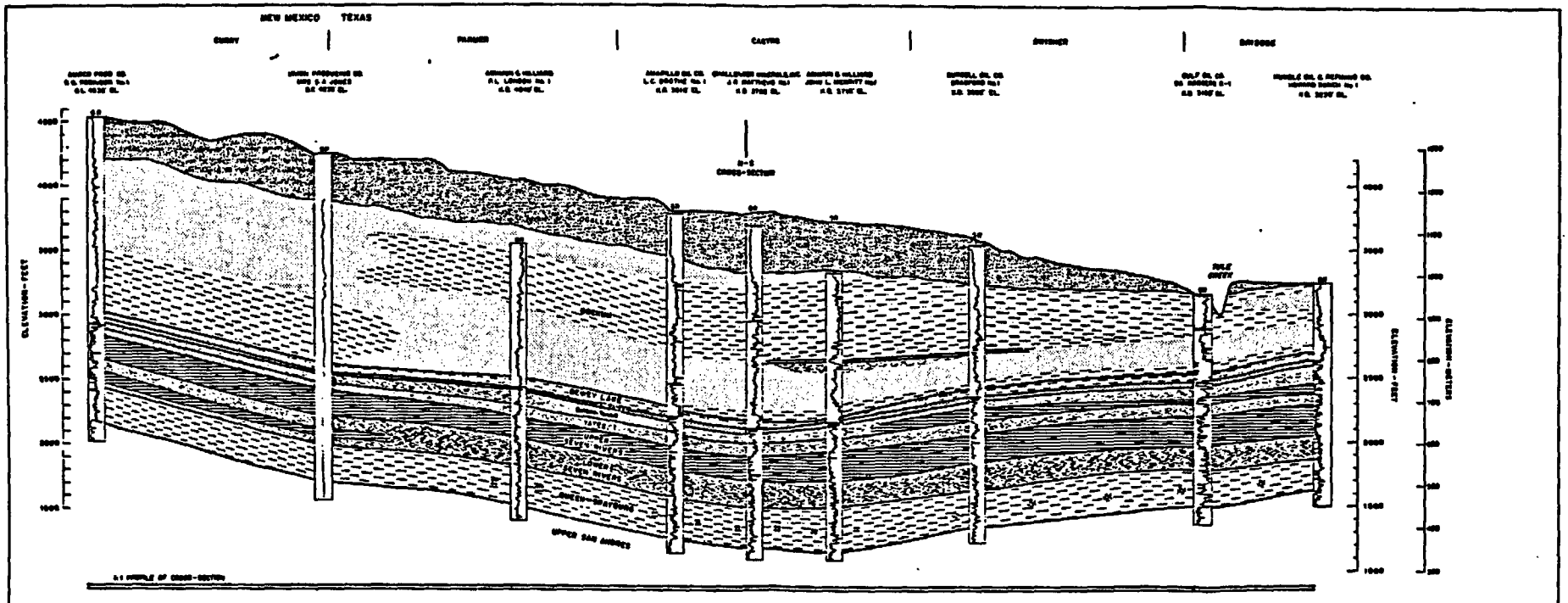

Explanation

- UNCONSOLIDATED SAND AND GRAVEL
- LIMESTONE
- DOLOMITE
- SALT
- SALT WITH SHALE INTERBEDS
- ANHYDRITE
- SANDSTONE
- SANDY SILTSTONE
- SILTSTONE
- SILTSTONE WITH SALT INTERBEDS
- R.S. = RESALT INTERBED
- S.F. = SERVICE FLOOR
- G.L. = GROUND LEVEL

Notes:

1. Datum is Mean Sea Level
2. Geophysical Logs are Gamma Ray (GR) or Spontaneous Potential (SP)
3. Left Margin of Log Corresponds to Axis of Well
4. Ogallala Thicknesses from "Ogallala Aquifer Mapping Program," SWEC, 1993.
5. Surface Topography from U.S.G.S. Clovis (1962) and Plainview (1974) Texas 2° Sheets

SCALE - MILES

SCALE - KILOMETERS

Vertical Exaggeration 76x

Source: SWEC Sketch No. 13697-45-E-1

East-West Cross Section

Queen-Grayburg Through Ogallala

Figure 3-13

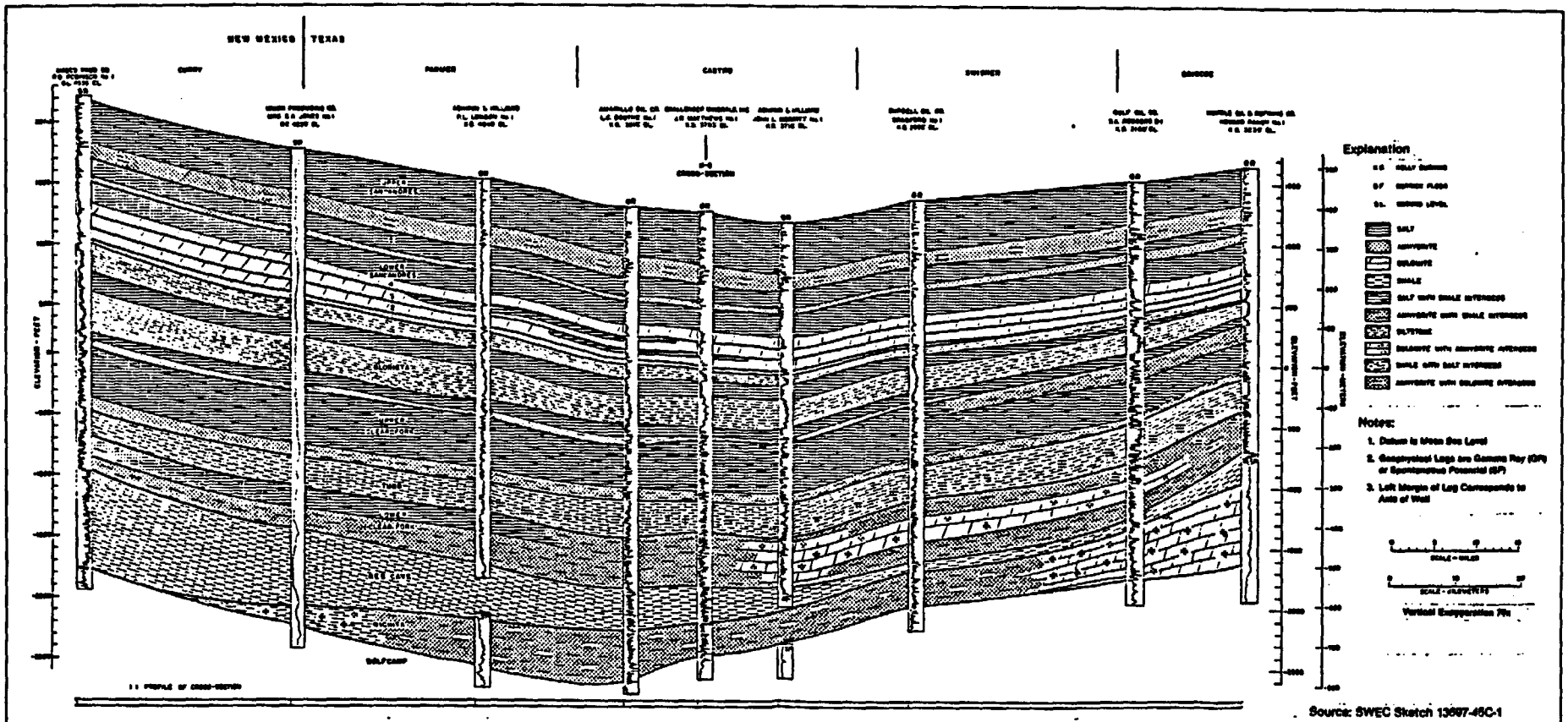

Source: SWEC Sketch 13697-45C-1

East-West Cross Section
Wichita Through Upper San Andres

Figure 3-11

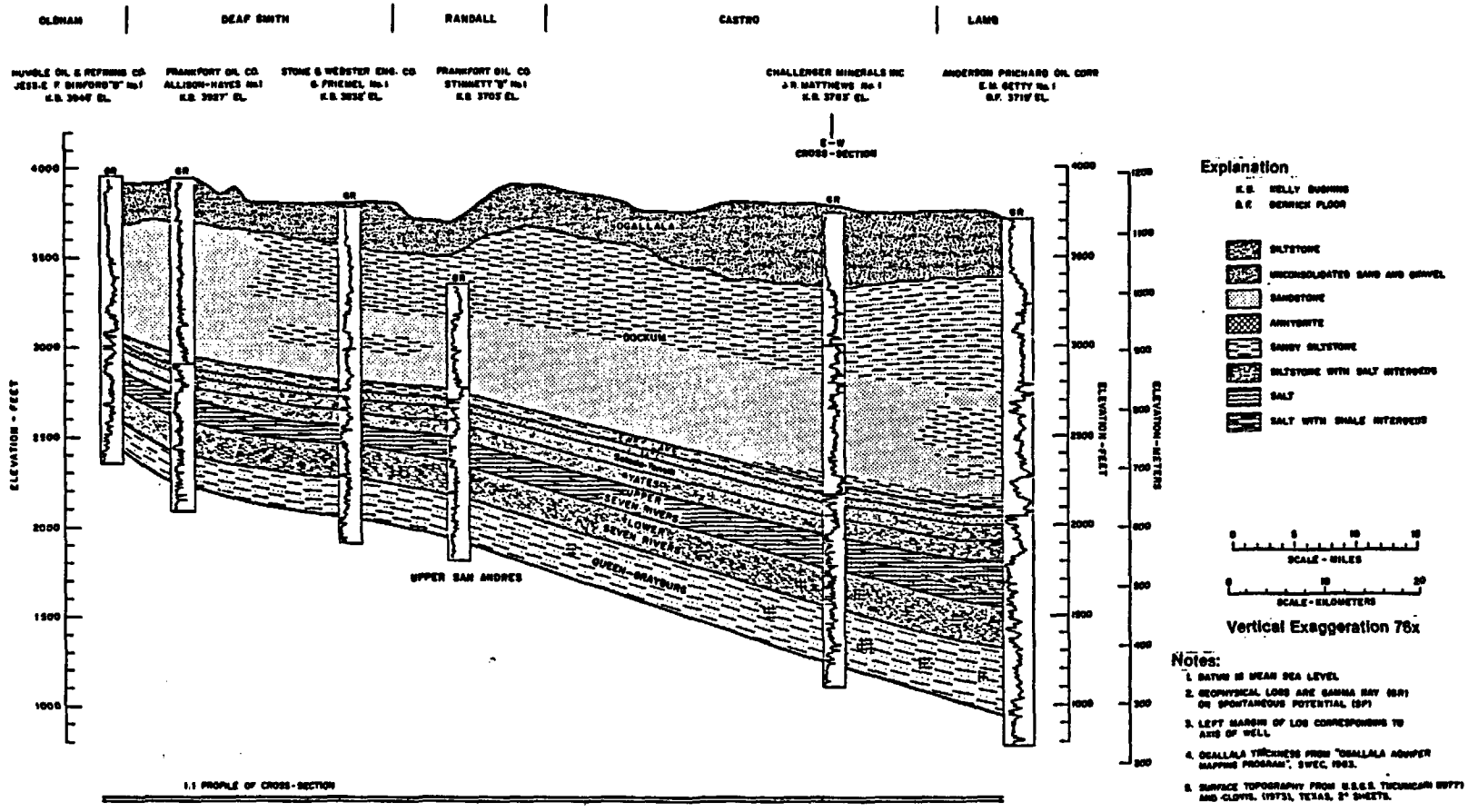

1.1 PROFILE OF CROSS-SECTION

See Figure 3-8 for Section Location

Source: SWEC Sketch No. 13697-45F-1

North-South Cross Section
Queen-Grayburg Through Ogallala

Figure 3-14

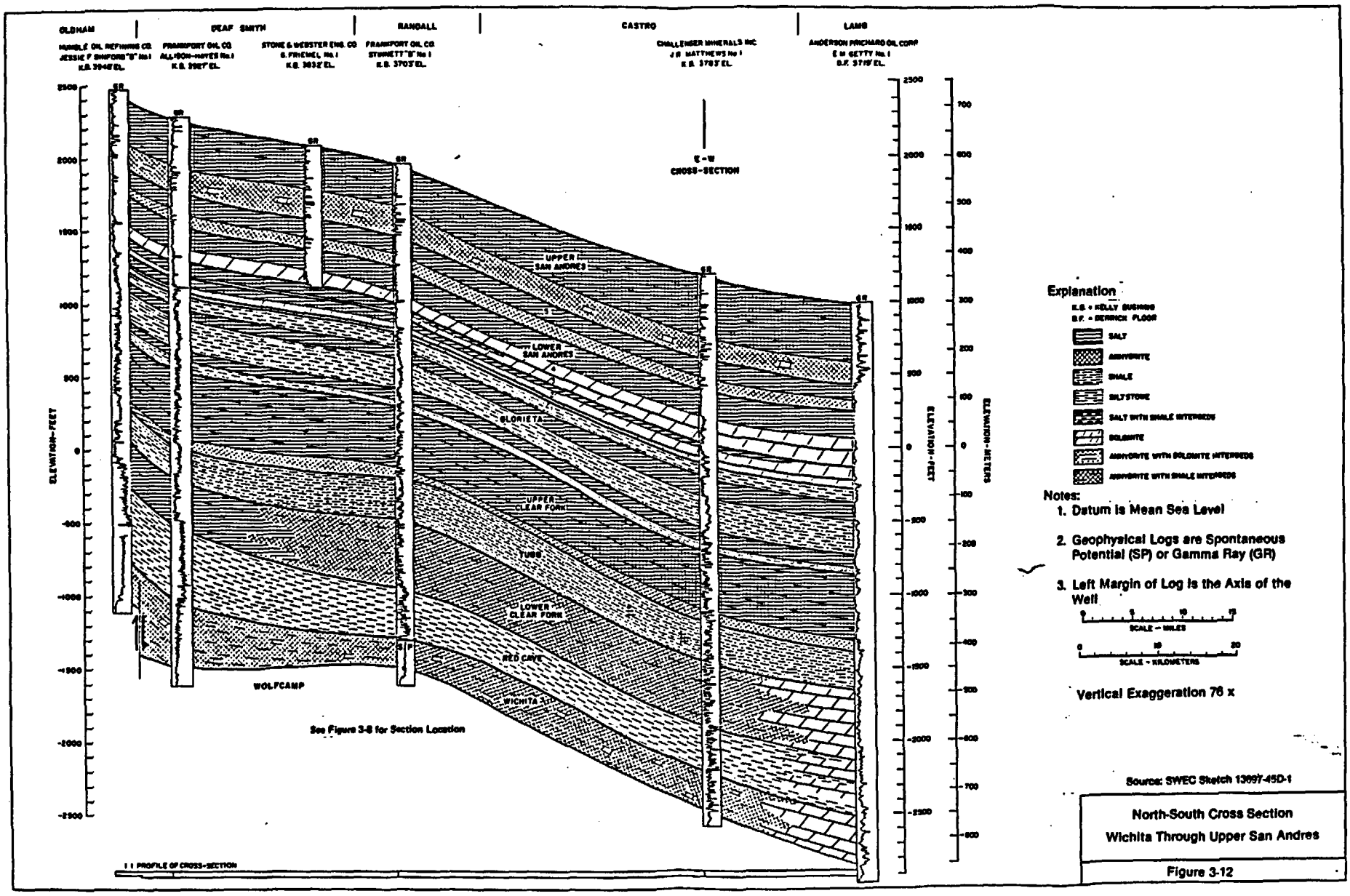

North-South Cross Section
Wichita Through Upper San Andres

Figure 3-12

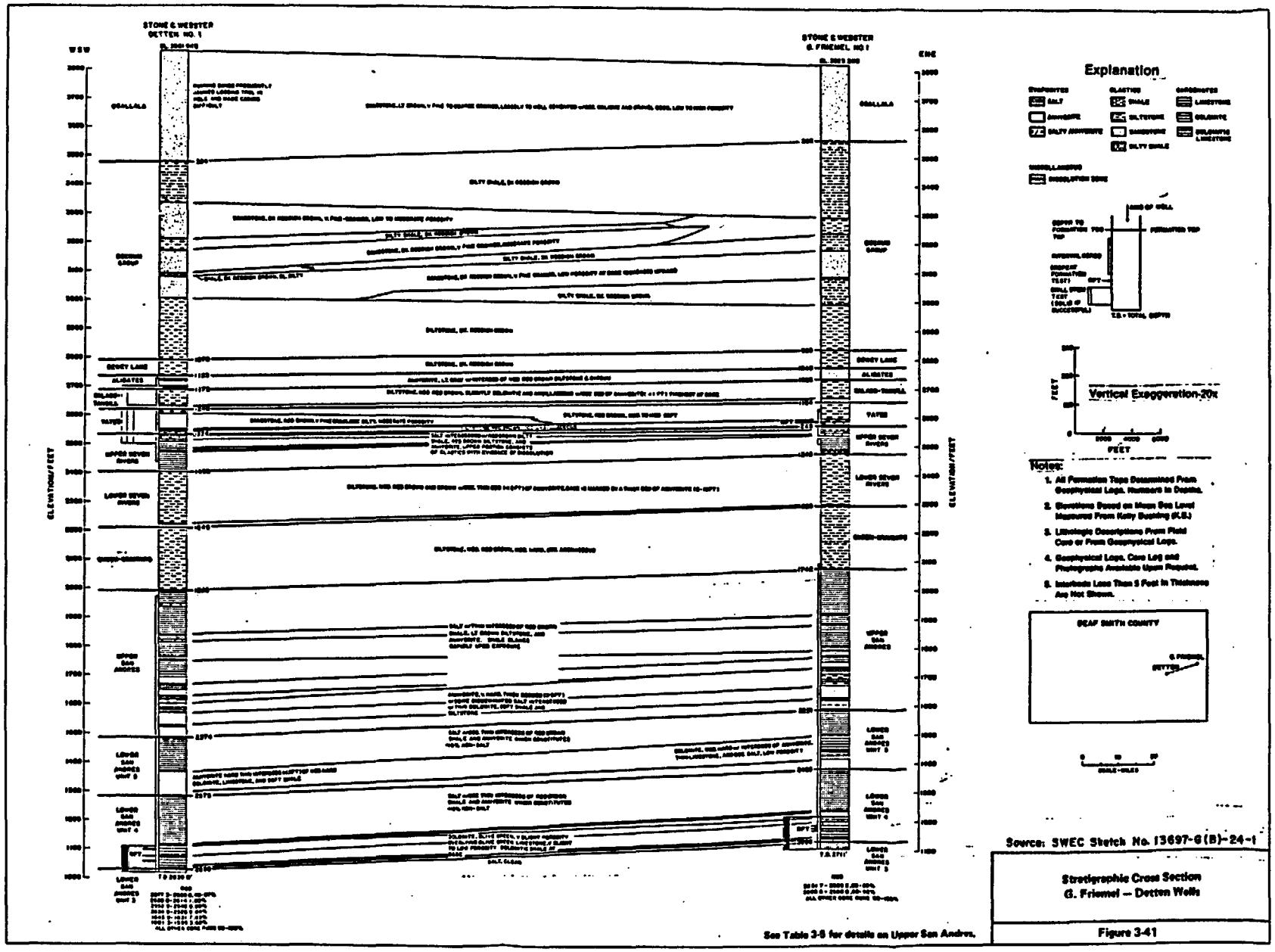

Source: SWEC Sketch No. 13697-G(B)-24-1

Stratigraphic Cross Section
G. Friemel — Detten Wells

Figure 3-41

REPRESENTATIVENESS OF ESF SITE FROM A GEOTECHNICAL VIEWPOINT

1. REGIONAL GEOLOGY
   --Continuity within Palo Duro Basin allows extrapolation of known conditions to the site.

2. RANDOM SAMPLE
   --Specific ESF location at the site can be chosen randomly due to the continuity.

REPRESENTATIVENESS OF ESF SITE FROM A GEOTECHNICAL VIEWPOINT

3. CONCLUSION

   –From a geotechnical viewpoint, the ESF can be located anywhere within the 9 square mile site. Geotechnical concerns are not a driver for locating the ESF.

EXPLORATORY SHAFT LOCATION SELECTION

BY

SRPO

NRC/SRPO MEETING
ON ESF DESIGN
HOUSTON, TEXAS
MAY 5-7, 1987

SHAFT LOCATION WITHIN NINE SQUARE MILES

- STUDY CONDUCTED TO LOCATE ESF WITHIN DESIGNATED NINE SQUARE MILE AREA IN DEAF SMITH COUNTY, TEXAS

- STUDY TOOK INTO ACCOUNT 1985 VERSION OF REPOSITORY CONCEPTUAL DESIGN

ESF LOCATION SELECTION CRITERIA

DOE REPOSITORY SITING GUIDELINES (10 CFR 960) WERE APPLIED IN MICRO SCALE

- POSTCLOSURE CRITERIA
- PRECLOSURE CRITERIA

POSTCLOSURE CRITERIA

THESE ARE REGIONAL AND LONG TERM CRITERIA AND WERE APPLIED DURING THE SELECTION OF NINE SQUARE MILE AREA. THEY WERE NOT APPLICABLE IN MICRO SCALE.

PRECLOSURE CRITERIA

- APPLICABILITY OF ALL ELEVEN CRITERIA EXAMINED
- SIX RELEVANT CRITERIA APPLIED
  1. POPULATION DENSITY AND DISTRIBUTION
  2. ENVIRONMENT QUALITY
  3. SOCIOECONOMIC IMPACTS
  4. TRANSPORTATION
  5. SURFACE CHARACTERISTICS/FLOODING
  6. ROCK CHARACTERISTICS/DIP OF SALT

APPLICATION OF CRITERIA/CONSIDERATIONS

AVOIDANCE AREAS

1. AVOID PROXIMITY TO HOUSES AND STRUCTURES
2. AVOID STREAM BOTTOMS AND PLAYAS AS POTENTIAL ARCHAEOLOGICAL SITES
3. AVOID AREAS SUPPORTING SPECIALIZED ECONOMY

FAVORABLE AREAS

4. AREAS CLOSE TO HIGHWAYS ARE FAVORABLE
5. HIGHER, FLAT AND WELL DRAINED GROUNDS ABOVE FLOOD PLAINS ARE FAVORABLE
6. UP-DIP LOCATIONS OF ALL SHAFTS ARE FAVORABLE, OBSERVE BUFFER ZONE BETWEEN ESF AND REPOSITORY WORKINGS

PHYSICAL CONSIDERATIONS FOR LOCATING ESF

- TWO, 12-FOOT DIAMETER SHAFTS IN ESF
- UNDERGROUND WORKINGS OF APPROXIMATELY 5000' ACCOMMODATES IN SITU TESTING
- LOCATION OF ESF RELATIVE TO REPOSITORY ACCOMMODATES POTENTIAL INTEGRATION OF THE TWO OR THEIR SEPARATION BY A BUFFER ZONE

RESULTS

- ADVOIDANCE AREAS WERE IDENTIFIED ON NINE SQUARE MILE AREA
- FAVORABLE AREAS WERE EXAMINED
- ESF ACCORDINGLY LOCATED

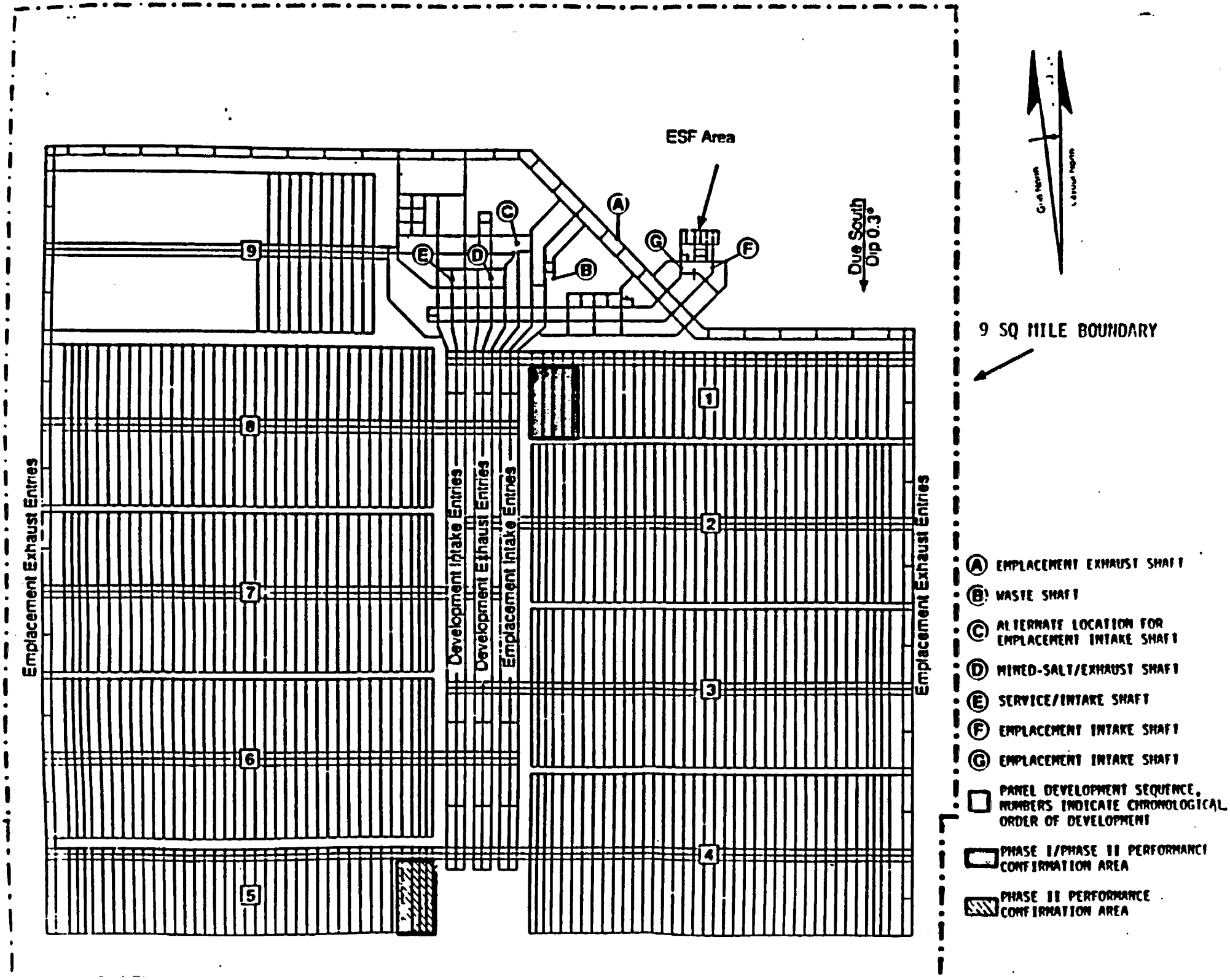
ESF Area
Due South
Dip 0.3°
9 SQ MILE BOUNDARY
Emplacement Exhaust Entries
Development Intake Entries
Development Exhaust Entries
Emplacement Intake Entries
Emplacement Exhaust Entries
1
2
3
4
5
6
7
8
9
A
B
C
D
E
F
G
A EMPLACEMENT EXHAUST SHAFT
B WASTE SHAFT
C ALTERNATE LOCATION FOR EMPLACEMENT INTAKE SHAFT
D MINED-SALT/EXHAUST SHAFT
E SERVICE/INTAKE SHAFT
F EMPLACEMENT INTAKE SHAFT
G EMPLACEMENT INTAKE SHAFT
PANEL DEVELOPMENT SEQUENCE, NUMBERS INDICATE CHRONOLOGICAL ORDER OF DEVELOPMENT
PHASE I/PHASE II PERFORMANCE CONFIRMATION AREA
PHASE II PERFORMANCE CONFIRMATION AREA

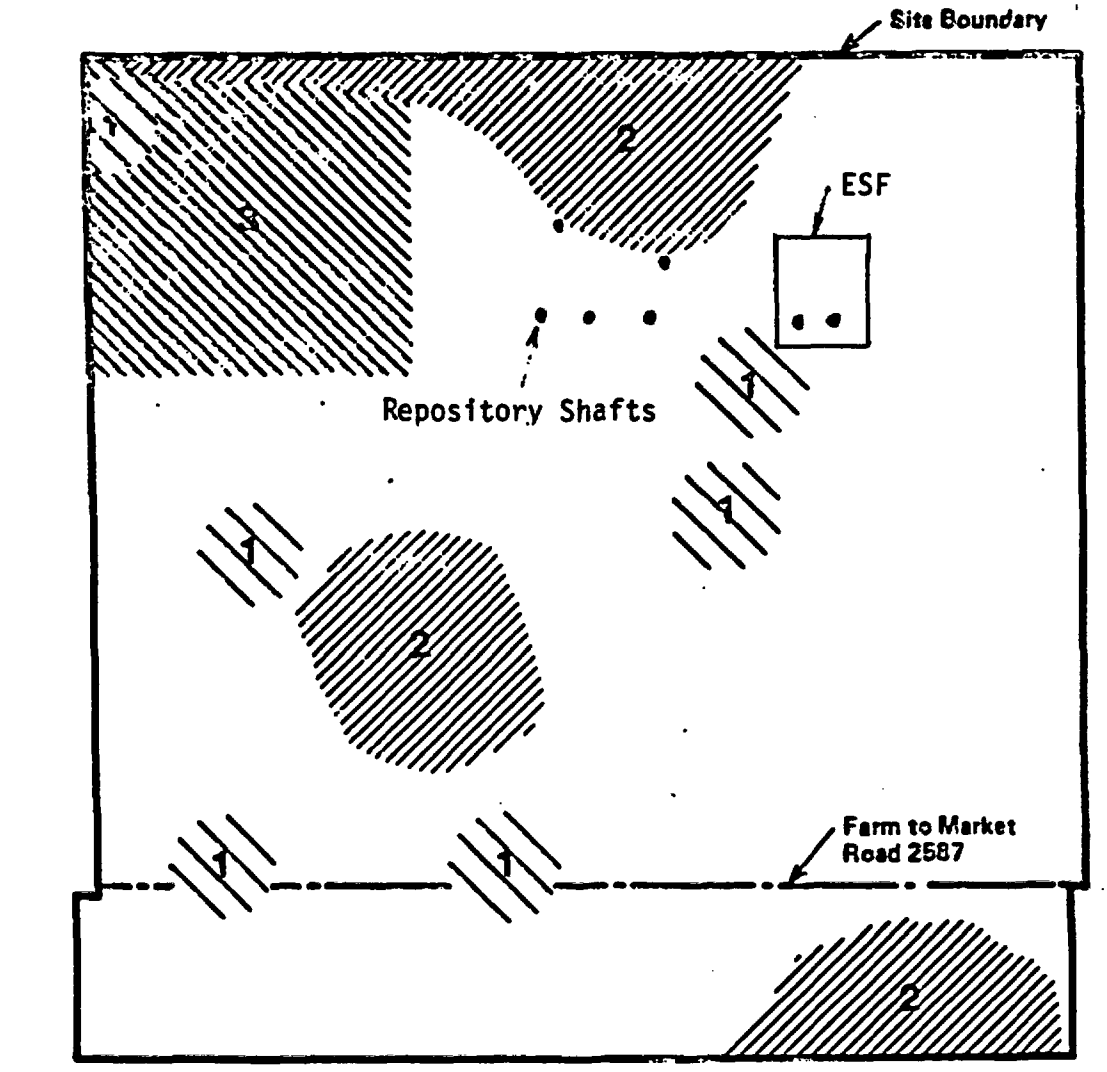

Avoidance Areas:

1 Population
2 Environmental/PMF
3 Socioeconomic

Approximate Scale

1 Mile

1 km

Application of Siting Criteria

Deaf Smith Site

EXPLORATORY SHAFT FREEZING, LINING, AND OPERATIONAL SEAL

BY

PARSONS BRINCKERHOFF/PB-KBB

NRC/SRPO MEETING
ON ESF DESIGN
HOUSTON, TEXAS
MAY 5-7, 1987

STRATIGRAPHY
FROM SRP SYNTHETIC DATA

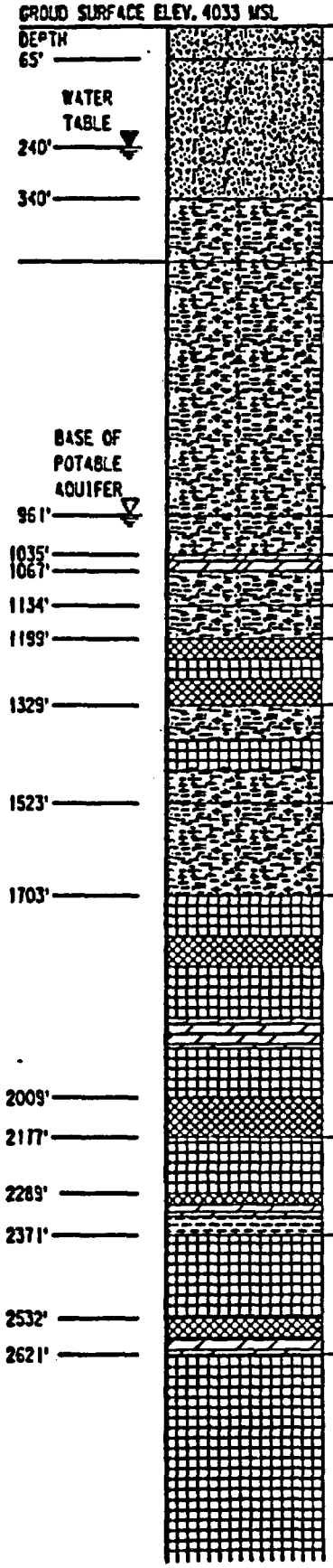

GROUND SURFACE ELEV. 4033 MSL	FORMATION	LITHOLOGIES
DEPTH 65'	BLACKWATER DRAW	LOESS (SILT & VERY FINE SAND)
WATER TABLE 240'	OGALLALA	SILTS, SANDS, GRAVEL WITH LAYERS OF CALICHE
340'		
	DOCKUM	SANDSTONES, SILTSTONES, & SHALES
BASE OF POTABLE AQUIFER 961'		
1035'	DEWEY LAKE	SILTSTONE WITH CLAYSTONE
1067'	ALIBATES	DOLOMITE WITH SILTSTONE
1134'	SALADO	SILTSTONE WITH ANHYDRITE & CLAYSTONE
1199'	YATES	SILTSTONE WITH CLAYSTONE
1329'	UPPER SEVEN RIVERS	SALT & ANHYDRITE WITH CLAYSTONE
1523'	LOWER SEVEN RIVERS	MUDSTONE & SANDSTONE WITH SALT, SILTSTONE & ANHYDRITE
1703'	QUEEN / GRAYBURG	SANDSTONE, SILTSTONE & MUDSTONE
2009'	UPPER SAN ANDRES	SALT WITH CLASTICS, ANHYDRITE & DOLOMITE
2177'		ANHYDRITE WITH DOLOMITE, SALT & CLASTICS
2289'	LOWER SAN ANDRES UNIT 5	SALT WITH ANHYDRITE & SILTSTONE
2371'		ANHYDRITE, DOLOMITE & CLAYSTONE
2532'	LOWER SAN ANDRES UNIT 4	SALT WITH SOME CLAYSTONE
2621'		DOLOMITE & ANHYDRITE
	LOWER SAN ANDRES UNIT 3	SALT

PB/PB-KBB MAY 1987

SHAFT 2 ARRANGEMENT

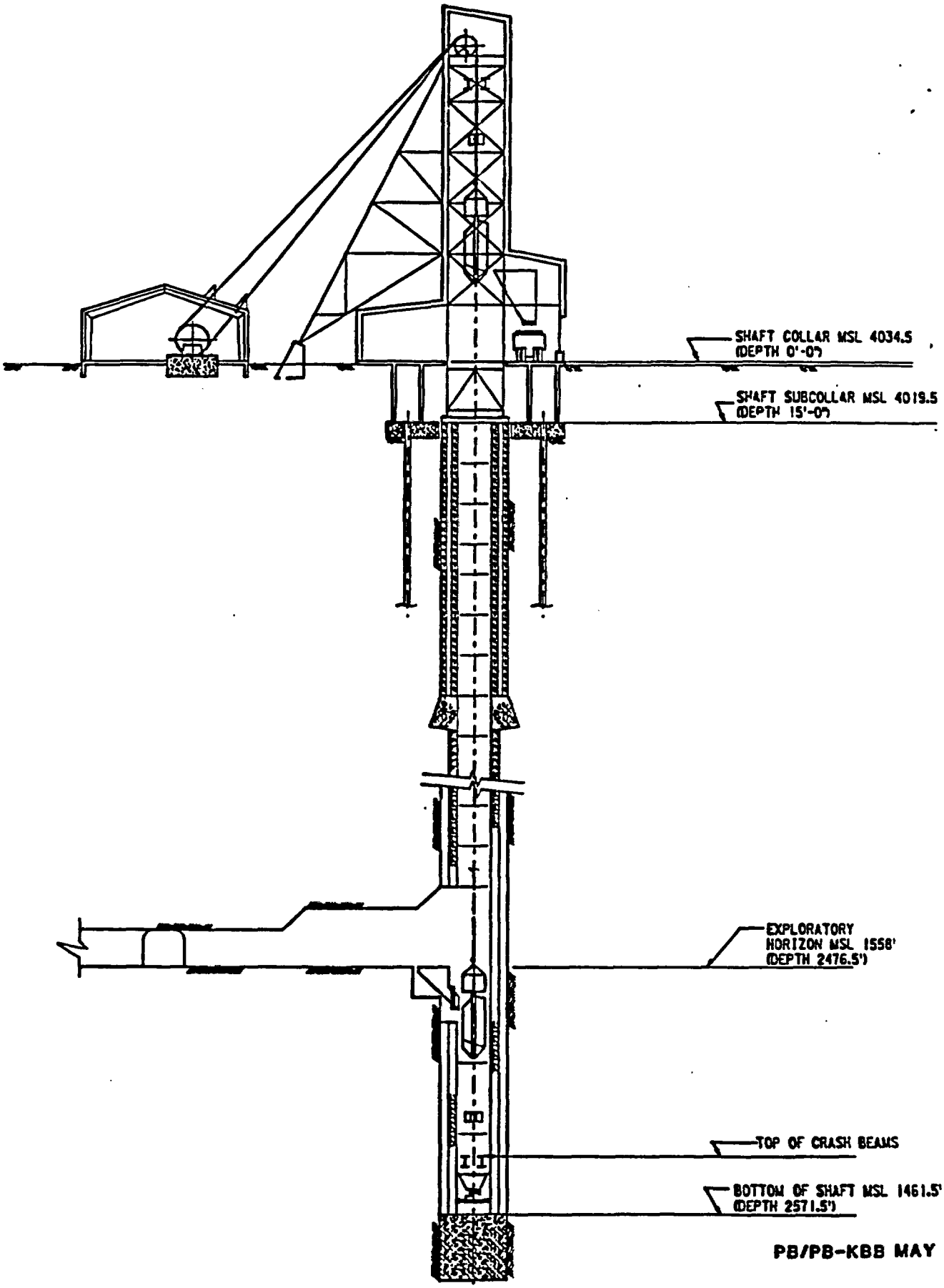

PB/PB-KBB MAY 1987

ESF - HYDROSTRATIGRAPHY

FORMATION	STEADY STATE GROUNDWATER FLOW GPM	
		4033 MSL SURFACE
BLACK WATER DRAW		3968 MSL
OGALLALA	WATER TABLE	3793 MSL (240')
	> 10 GPM	3693 MSL
DOCKUM	> 10 GPM	3354 MSL
SANTA ROSA		3255 MSL
		3072 MSL BASE OF POTABLE AQUIFIERS
DEWEY LAKE	0.002 GPM	2998 MSL
ALIBATES	0.26 GPM	2966 MSL
SALADO	0.002 GPM	2899 MSL
YATES	0.002 GPM	2834 MSL
UPPER SEVEN RIVERS	0.01 GPM	2704 MSL
LOWER SEVEN RIVERS	2.32 GPM	2510 MSL
QUEEN GRAYBURG	0.44 GPM	2330 MSL
UPPER SAN ANDRES (USA)	0.30 GPM	2024 MSL
	0.02 GPM	1856 MSL
LSA 5	0.02 GPM	1744 MSL
	0.01 GPM	1662 MSL
LSA 4	0.06 GPM	1501 MSL
	0.02 GPM	1430 MSL
LSA 3		1412 MSL

PB/PB-KBB MAY 1987

FREEZE HOLE ARRANGEMENT

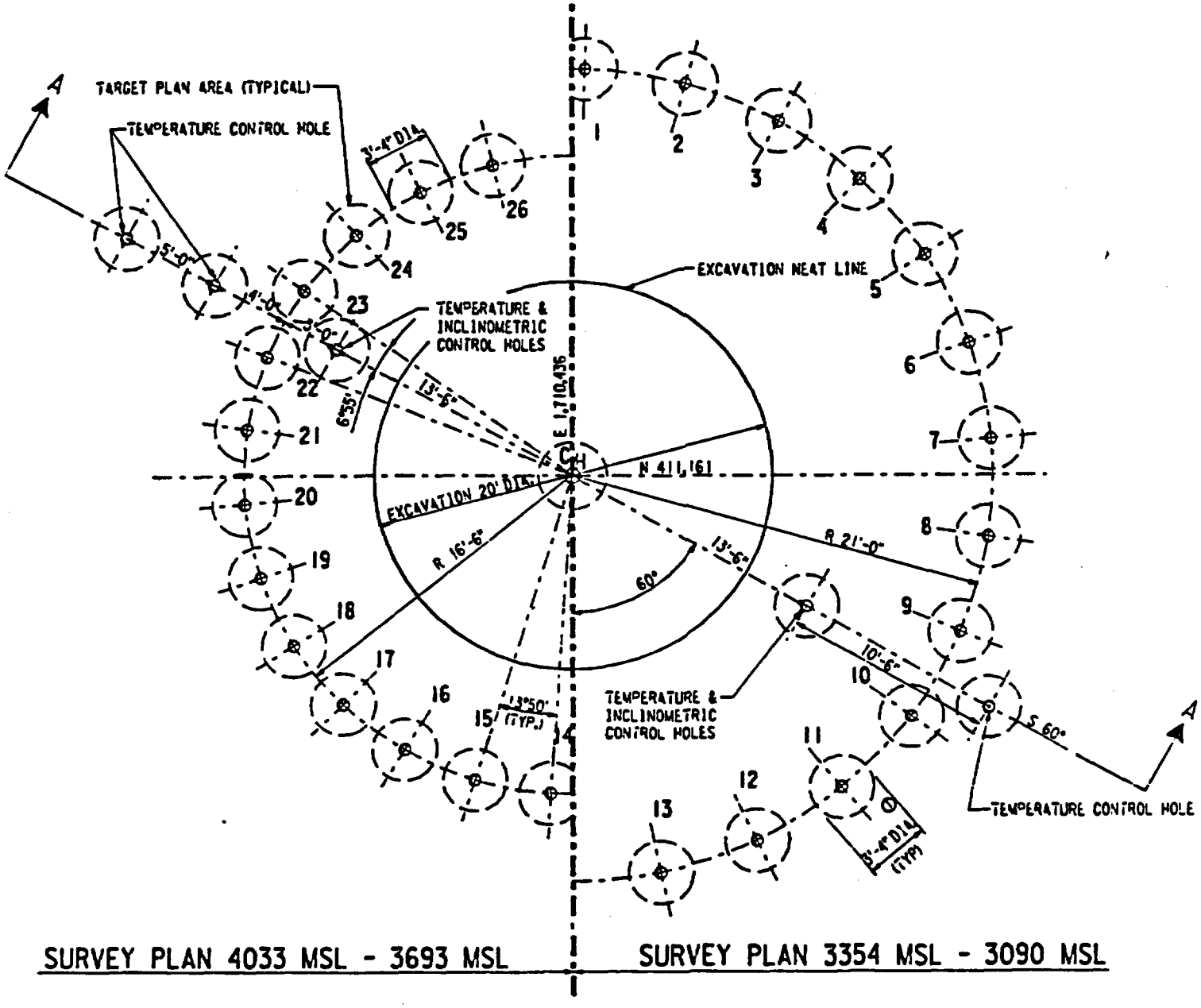

SURVEY PLAN 4033 MSL - 3693 MSL

SURVEY PLAN 3354 MSL - 3090 MSL

PB/PB-KBB MAY 1987

FREEZE WALL DEVELOPMENT

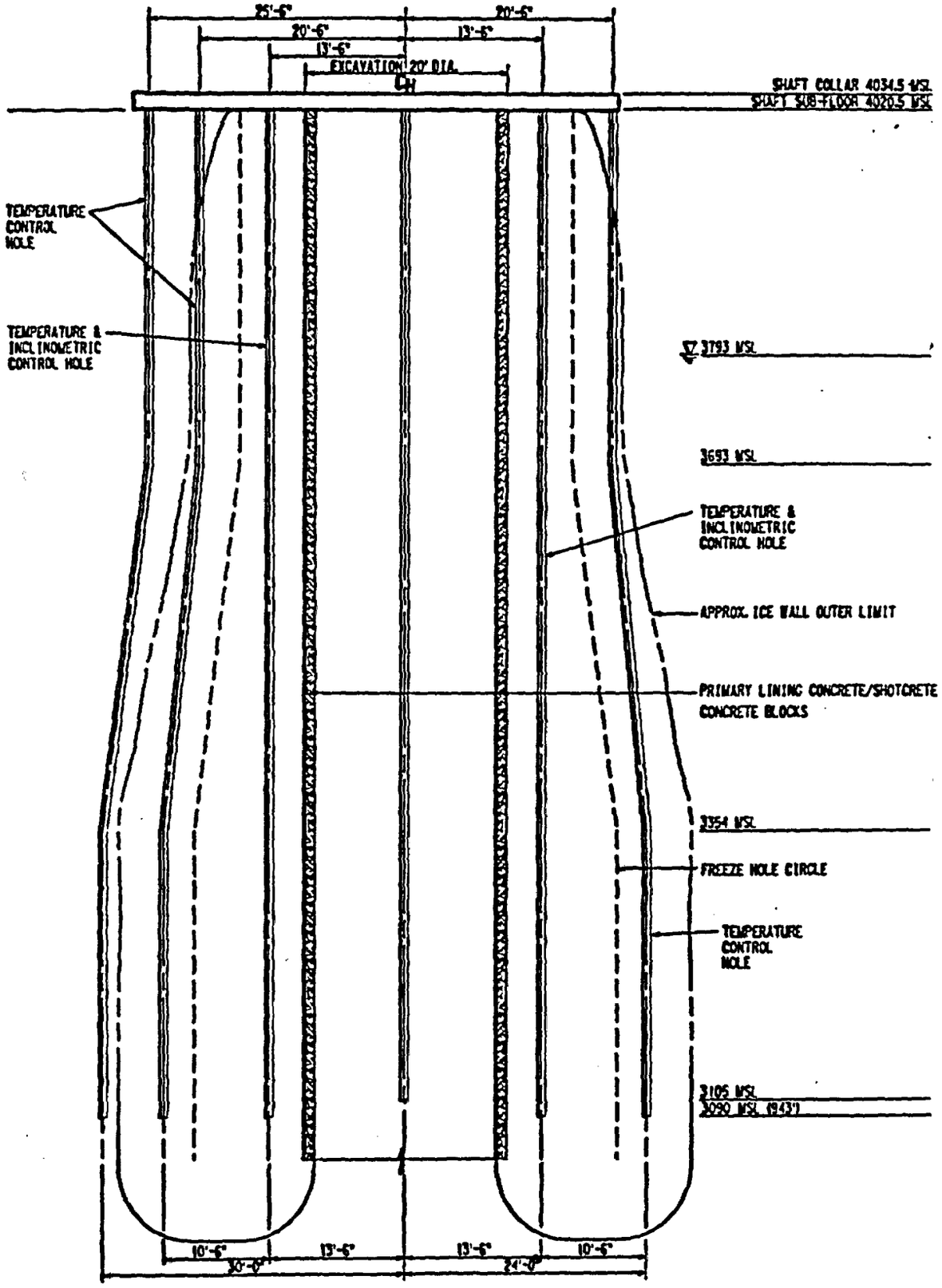

SECTION 'A-A'

PB/PB-KBB MAY 1987

PRELIMINARY LINING

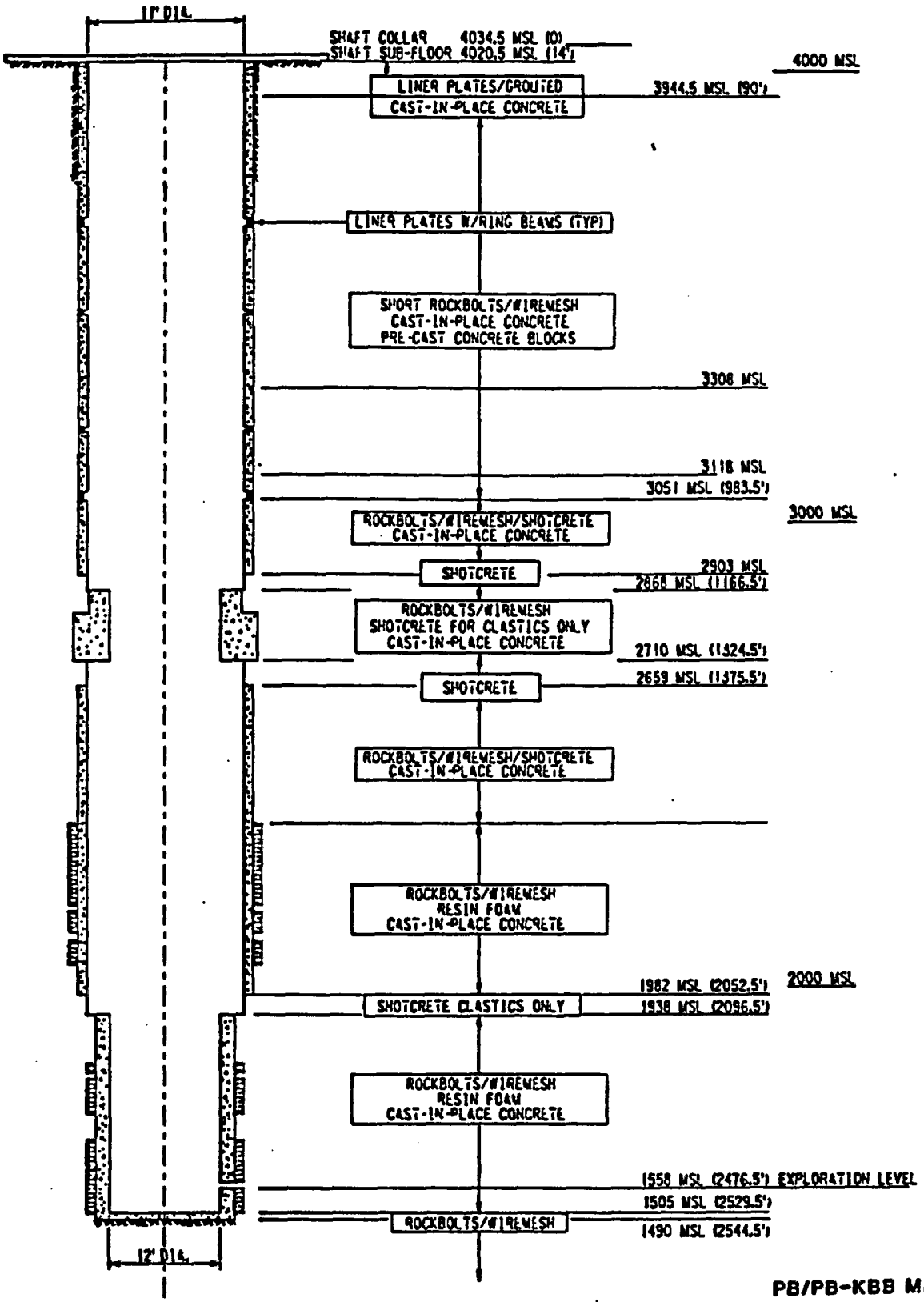

PB/PB-KBB MAY 1987

SHAFT LINING ARRANGEMENT

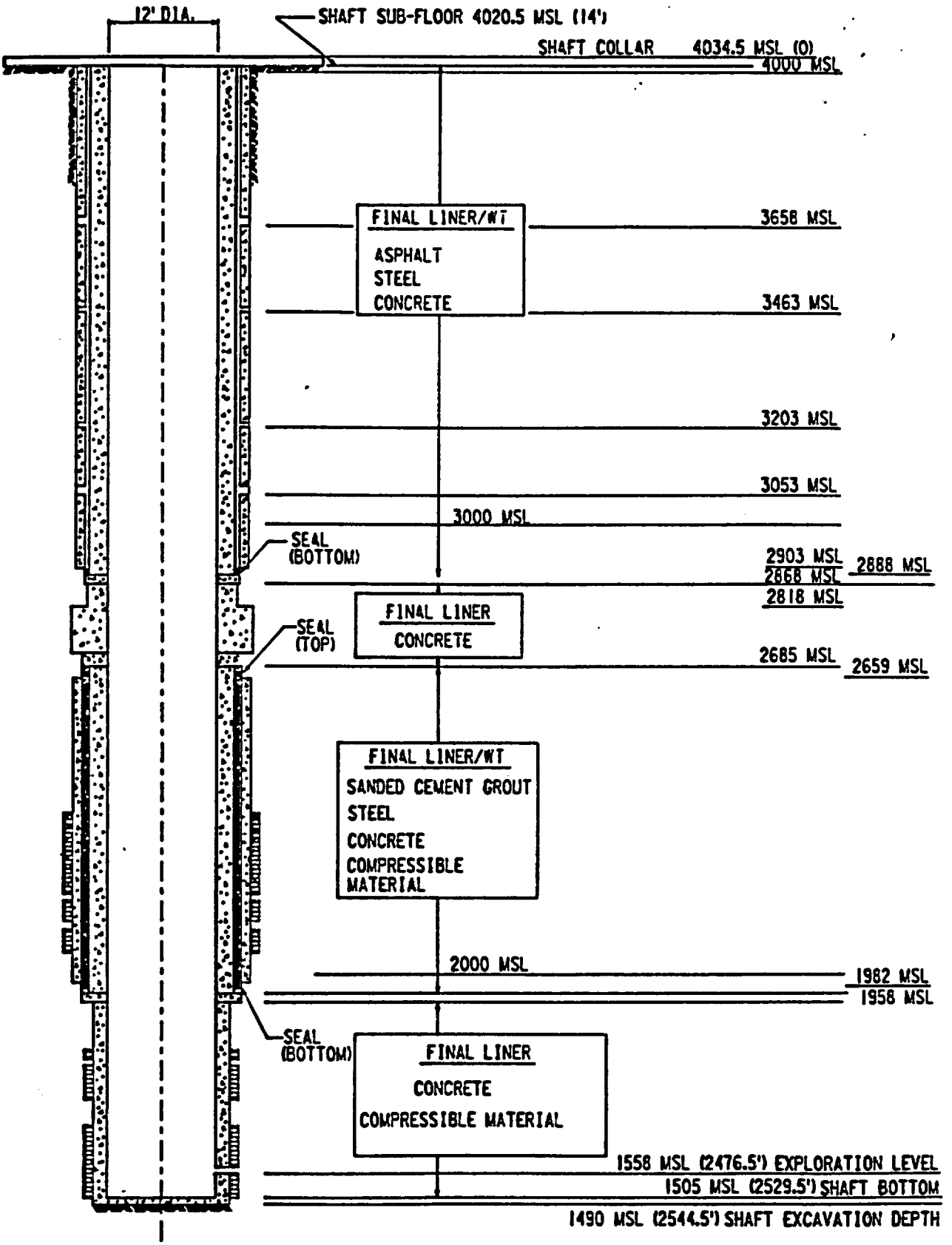

PB/PB-KBB MAY 1987

OPERATIONAL CHEMICAL SHAFT SEAL

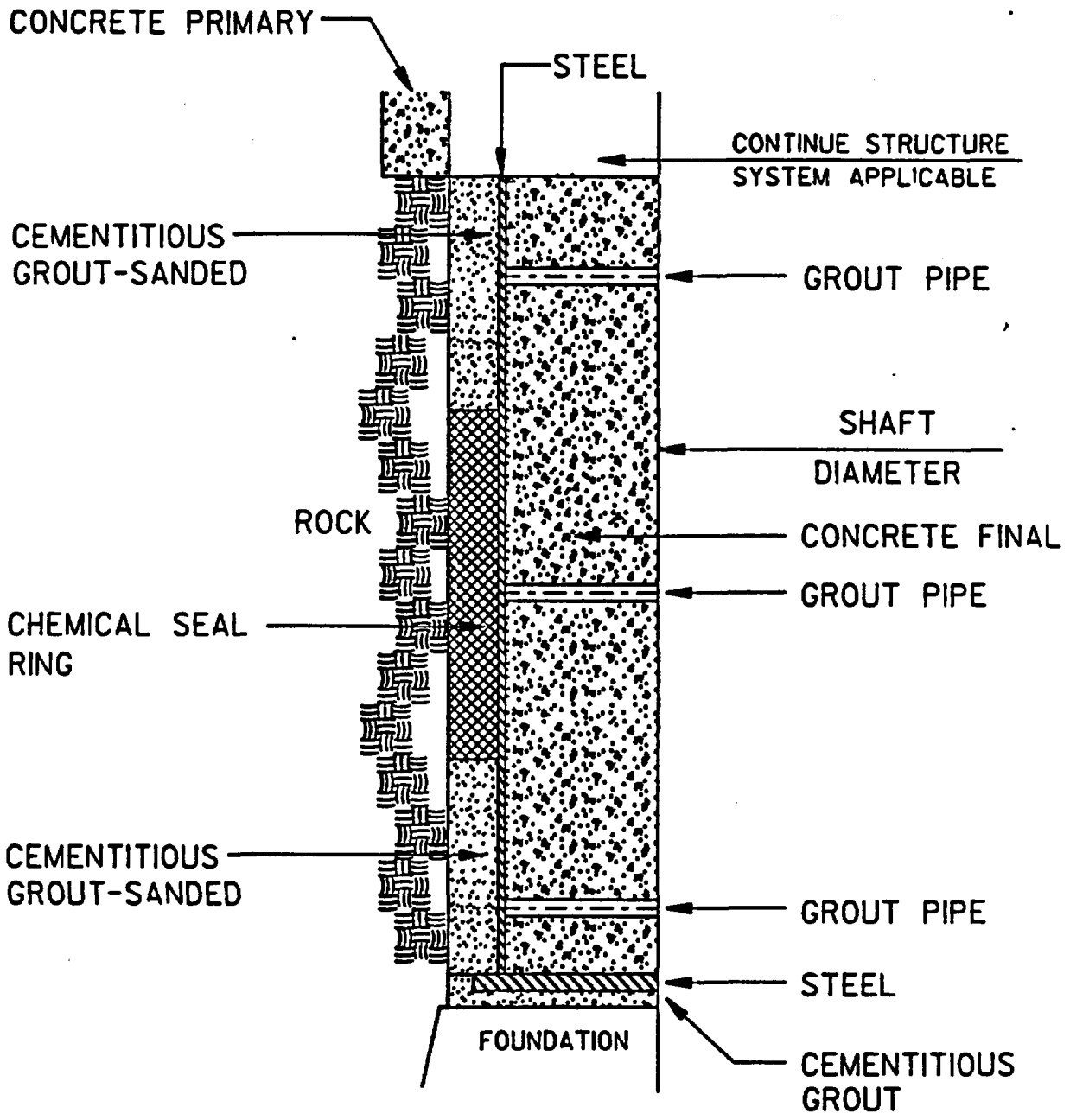

PB/PB-KBB MAY 1987

OPERATIONAL CHEMICAL SHAFT SEAL

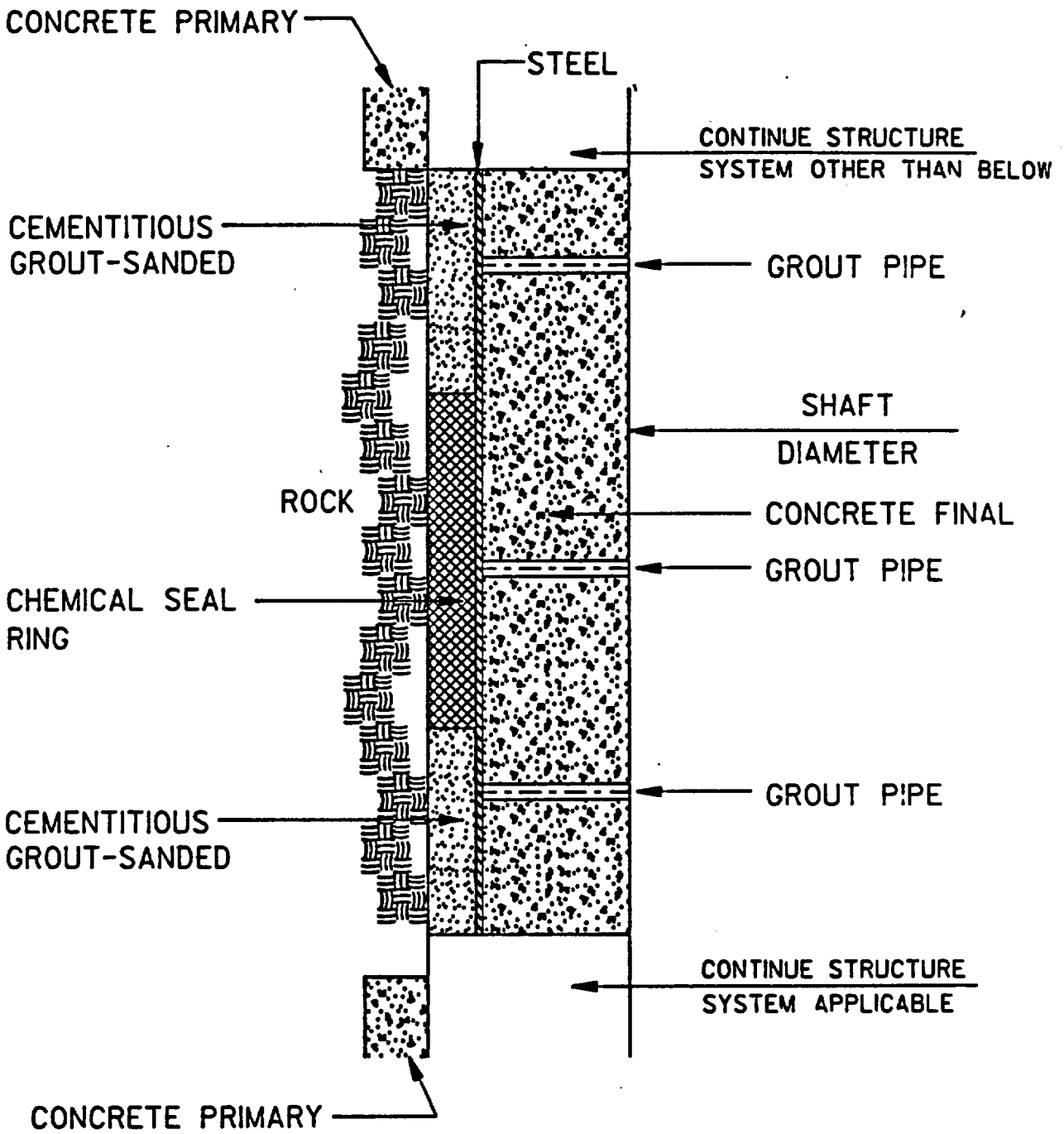

PB/PB-KBB MAY 1987

OPERATIONAL ASPHALT SHAFT SEAL

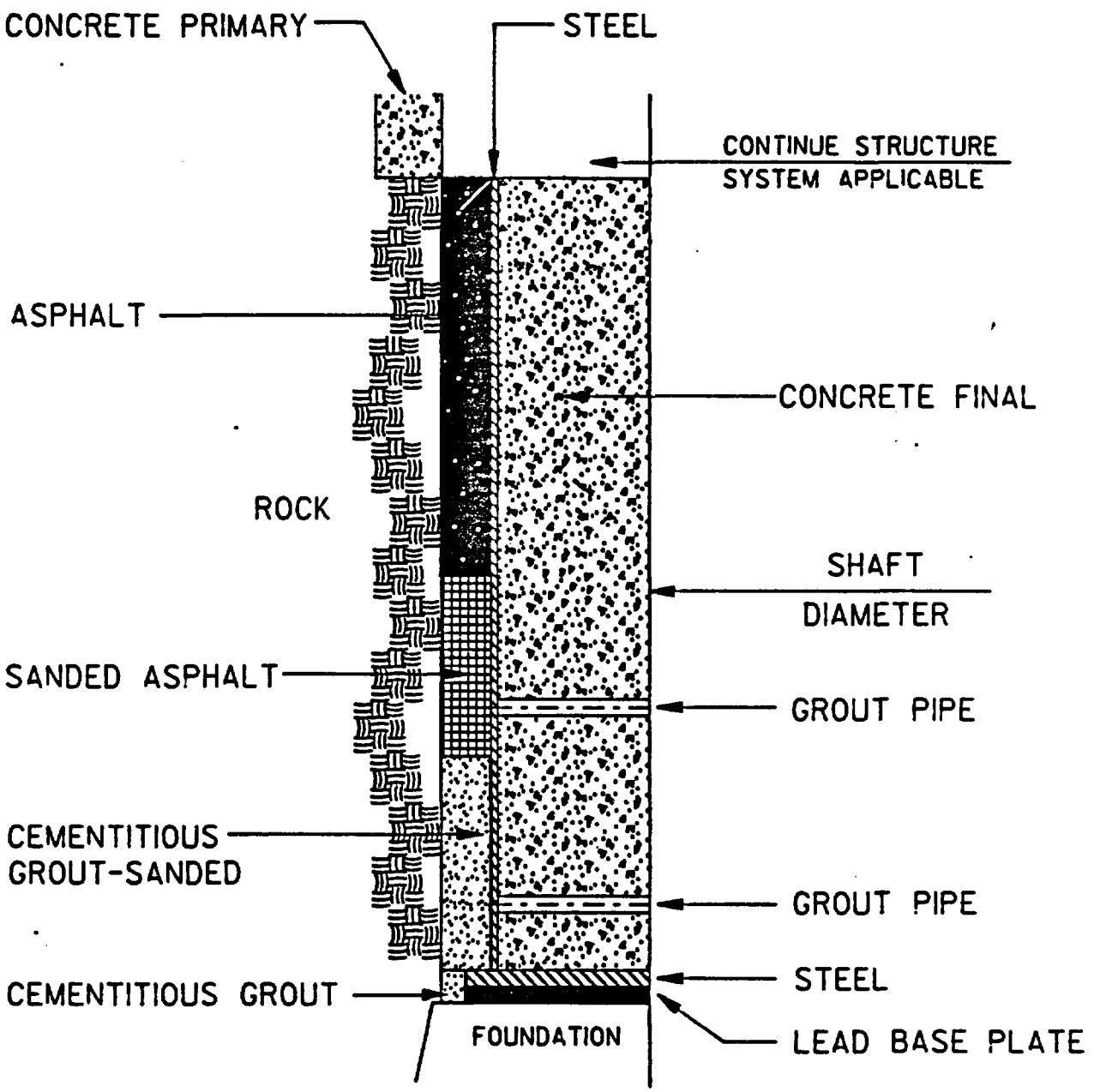

PB/PB-KBB MAY 1987

EXPLORATORY SHAFT FREEZING, LINING AND OPERATIONAL SEAL DESIGN

- DESIGN REQUIREMENTS
- SHAFT FREEZING
- SHAFT EXCAVATION
- SHAFT LINING AND SEAL DESIGN
- SHAFT LINING AND SEAL PLACEMENT

ESF SHAFTS DESIGN REQUIREMENTS

FUNCTIONAL REQUIREMENTS

- ESF TO SUPPORT REPOSITORY CONSTRUCTION

PERFORMANCE CRITERIA

- USE REASONABLY AVAILABLE TECHNOLOGY
- USE TECHNOLOGY SIMILAR TO THE PLANNED REPOSITORY
- DESIGN OF ESF PERMANENT STRUCTURES AND SIMILAR REPOSITORY STRUCTURES SHALL BE TO THE SAME CRITERIA
- ESF OPENINGS AND BOREHOLES SHALL NOT BECOME PREFERENTIAL PATHWAYS

CONSTRAINTS

- PERMANENT ESF STRUCTURES SHALL HAVE A 100-YEAR MAINTENANCE LIFE

- PERMANENT ESF STRUCTURES ARE
  - UNDERGROUND OPENINGS
  - SHAFT LINERS
  - OPERATIONAL SEALS
  - GROUND SUPPORT

SHAFT FREEZING

DESIGN REQUIREMENTS

FUNCTIONAL REQUIREMENTS

- PREVENT WATER INFLOW TO SHAFT EXCAVATION
- STABILIZE WATERBEARING STRATA TO PERMIT SHAFT EXCAVATION
- STABILIZE SHAFT TO PERMIT SITE CHARACTERIZATION TESTING AND INSTALLATION OF PRELIMINARY ROCK SUPPORT

PERFORMANCE CRITERIA

- ICE WALL SHALL:
  - BE STRUCTURALLY STABLE
  - MAINTAIN INTEGRITY OF SURROUNDING STRATA

SHAFT EXCAVATION

DESIGN REQUIREMENTS

FUNCTIONAL REQUIREMENTS

- PROVIDE EXCAVATIONS FOR:
  - INSTALLATION OF SHAFT LINING
  - INSTALLATION OF SHAFT SEALS
  - SITE CHARACTERIZATION ACTIVITIES
  - DESIGN VALIDATION TESTING
  - ACCESSING EXCAVATIONS AT THE REPOSITORY HORIZION

PERFORMANCE CRITERIA

- EXCAVATIONS SHALL UTILIZE APPROPRIATE PRELIMINARY ROCK SUPPORT
- EXCAVATION OVERBREAK SHALL BE CONTROLLED
- DISTURBANCE OF THE ADJOINING ROCK MASS SHALL BE MINIMIZED
- SEAL ZONES SHALL HAVE STRINGENT CONTROL
- GROUND WATER INFLOW SHALL BE CONTROLLED

SHAFT LINING AND PLACEMENT

DESIGN REQUIREMENTS

FUNCTIONAL REQUIREMENTS

- LINER SHALL PROVIDE FOR
  - GROUND SUPPORT
  - GROUNDWATER CONTROL
  - SHAFT OUTFITTING
  - SHAFT INSTRUMENTATION

PERFORMANCE CRITERIA

- LINER SHALL WITHSTAND ALL ANTICIPATED PRESSURES
- LINER SHALL WITHSTAND STATIC AND DYNAMIC LOADS OF CONVEYANCE SYSTEMS
- LINER SHALL SUPPORT UTILITIES AND CABLES
- LINER SHALL INCLUDE PROVISIONS FOR SHAFT INSTRUMENTATION

CONSTRAINTS

- ZERO WATER INFLOW THROUGH LINER IN OGALLALA AND DOCKUM
- WATER INFLOW THROUGH LINER BELOW OGALLALA AND DOCKUM
  - TOTAL 0.3 GPM
  - POINT SOURCE 0.1 GPM

SHAFT SEALS AND PLACEMENT

DESIGN REQUIREMENTS

FUNCTIONAL REQUIREMENTS

- PREVENT HORIZONTAL AND VERTICAL GROUNDWATER PATHWAYS

PERFORMANCE CRITERIA

- THE OPERATIONAL SEAL SYSTEM SHALL FUNCTION FOR THE LIFE OF THE SHAFTS
- OPERATIONAL SEALS SHALL:
  - MINIMIZE GROUNDWATER INFLOW
  - PREVENT VERTICAL MIGRATION OF GROUNDWATER

CONSTRAINTS

- MONITORING INSTRUMENTATION AND TESTING SHALL NOT ADVERSELY AFFECT THE SEAL FUNCTION

DESIGN VALIDATION TESTING

BY

PARSONS BRINCKERHOFF/PB-KBB

NRC/SRPO MEETING
ON ESF DESIGN
HOUSTON, TEXAS
MAY 5-7, 1987

ESF DESIGN VALIDATION AND ESF DESIGN PERFORMANCE MONITORING TESTING

- DATA NEEDS DETERMINED BY ESF A/E
- SPECIFIC INSTRUMENTATION/TESTING REQUIREMENTS DETERMINED BY UNDERGROUND TESTING CONTRACTOR (UTC)

OBJECTIVES OF ESF DESIGN PERFORMANCE MONITORING

- MECHANICAL RESPONSE MONITORING OF SHAFT STRUCTURAL COMPONENTS
- MONITORING OF SHAFT WATER CONTROL MEASURES
- MECHANICAL RESPONSE MONITORING OF UNDERGROUND OPENINGS (DRIFTS)

OBJECTIVES OF ESF DESIGN VALIDATION

- MEASUREMENT OF IN SITU GEOTECHNICAL PARAMETERS
  - STRESS FIELD/MECHANICAL PROPERTIES/GEOHYDROLOGY, ETC.
  - SUPPLEMENTS EDBH INFORMATION
- MEASUREMENT OF MINING INDUCED ALTERATIONS
  - CHANGES TO ABOVE
  - SUPPLEMENTS ESF DESIGN PERFORMANCE MONITORING

RESPONSE TO TESTING/MONITORING

- FIELD DESIGN CHANGES
- STEERING OF OPERATIONS AND MAINTENANCE ACTIVITIES
- CALIBRATION OF DESIGN

QUALITY ASSURANCE PROGRAM FOR ESF DESIGN

BY

PARSONS BRINCKERHOFF/PB-KBB

NRC/SRPO MEETING
ON ESF DESIGN
HOUSTON, TEXAS
MAY 5-7, 1987

ESF A-E
QA ACCESS TO MANAGEMENT

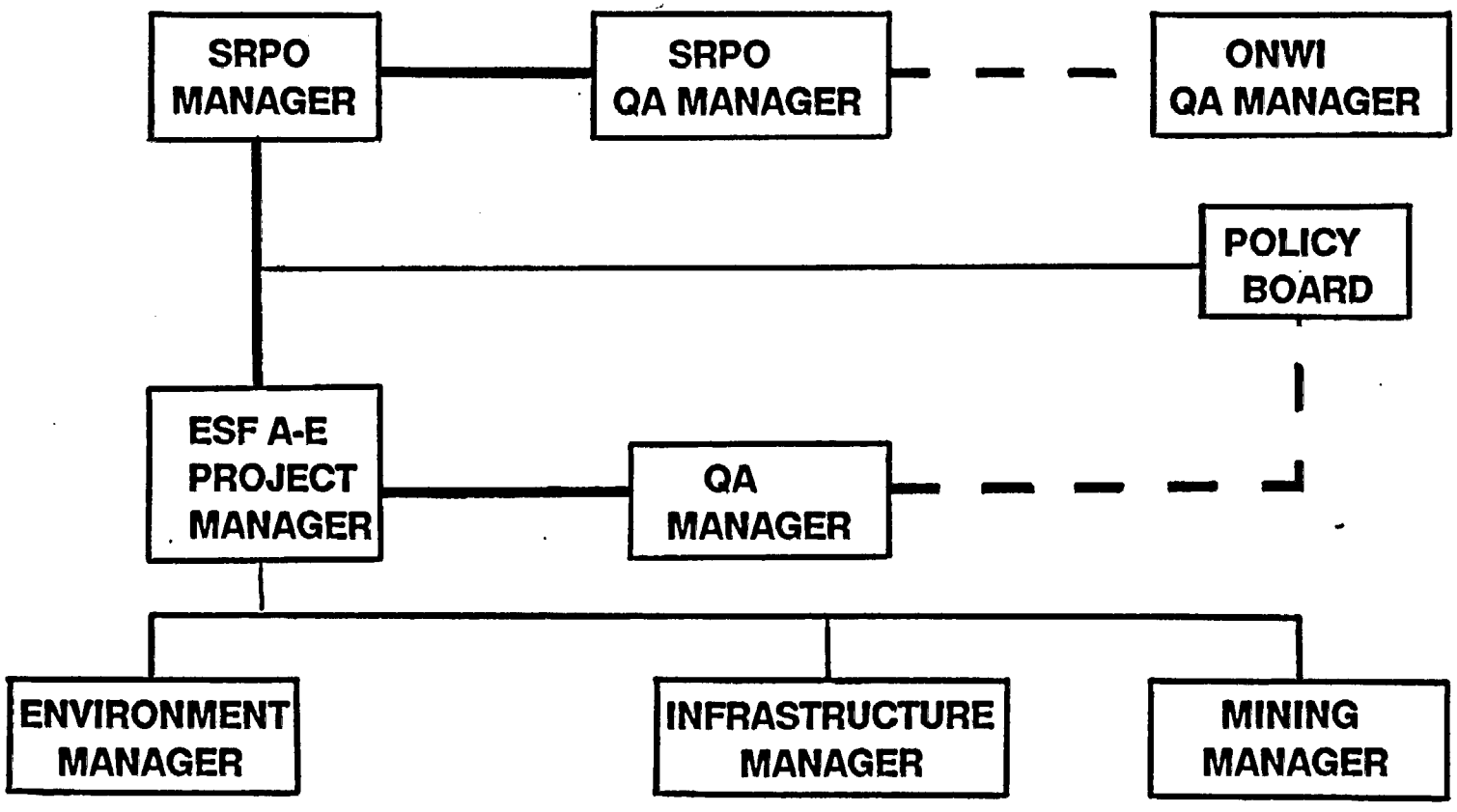

ESF A-E
QA IMPLEMENTATION METHOD

- QA PLAN
  ES-200-1
- QA PROCEDURES MANUAL
  ES-12-01
- QA ENGINEER/DESIGN MANUAL
  ES-6-01

ESF A-E
APPROPRIATE QA REQUIREMENTS

- ORGANIZATION
- QA PROGRAM
- DESIGN CONTROL
- PROCUREMENT DOCUMENT CONTROL
- INSTRUMENT PROCUREMENT AND DRAWINGS
- DOCUMENT CONTROL
- CONTROL OF PURCHASED ITEMS AND SERVICES
- IDENTIFICATION AND CONTROL OF ITEMS
- INSPECTION
- CONTROL OF NONCONFORMING ITEMS
- CORRECTIVE ACTION
- QA RECORDS
- AUDITS

ESF A-E
DESIGN CONTROL PROCEDURES

QAOP'S

2.01	DESIGN REVIEWS
S.02	DOCUMENT REVIEWS

EP'S

2.00	DESIGN INPUT
3.01	DRAFTING STANDARDS
3.02	CHECKING
3.03	DESIGN ANALYSIS
3.06	DESIGN REPORTS

ESF A-E
DESIGN CONTROL PROCEDURES (CONT.)

EP'S

3.11	VALIDATION/VERIFICATION OF COMPUTER CODES
3.12	COMPUTER PROGRAM DESIGN
3.13	COMPUTER SOFTWARE CUSTOMER CONTROL
4.01	IN-WORK REVIEWS
4.02	DESIGN REVIEWS
5.01	CONFIGURATION I.D. AND DOCUMENTATION
5.02	CONFIGURATION STATUS REPORTING
5.03	CONFIGURATION CHANGE CONTROL
6.01	INTERFACE CONTROL DRAWINGS
7.01	IN-WORK DOCUMENTS
7.02	DOCUMENT APPROVAL/RELEASE