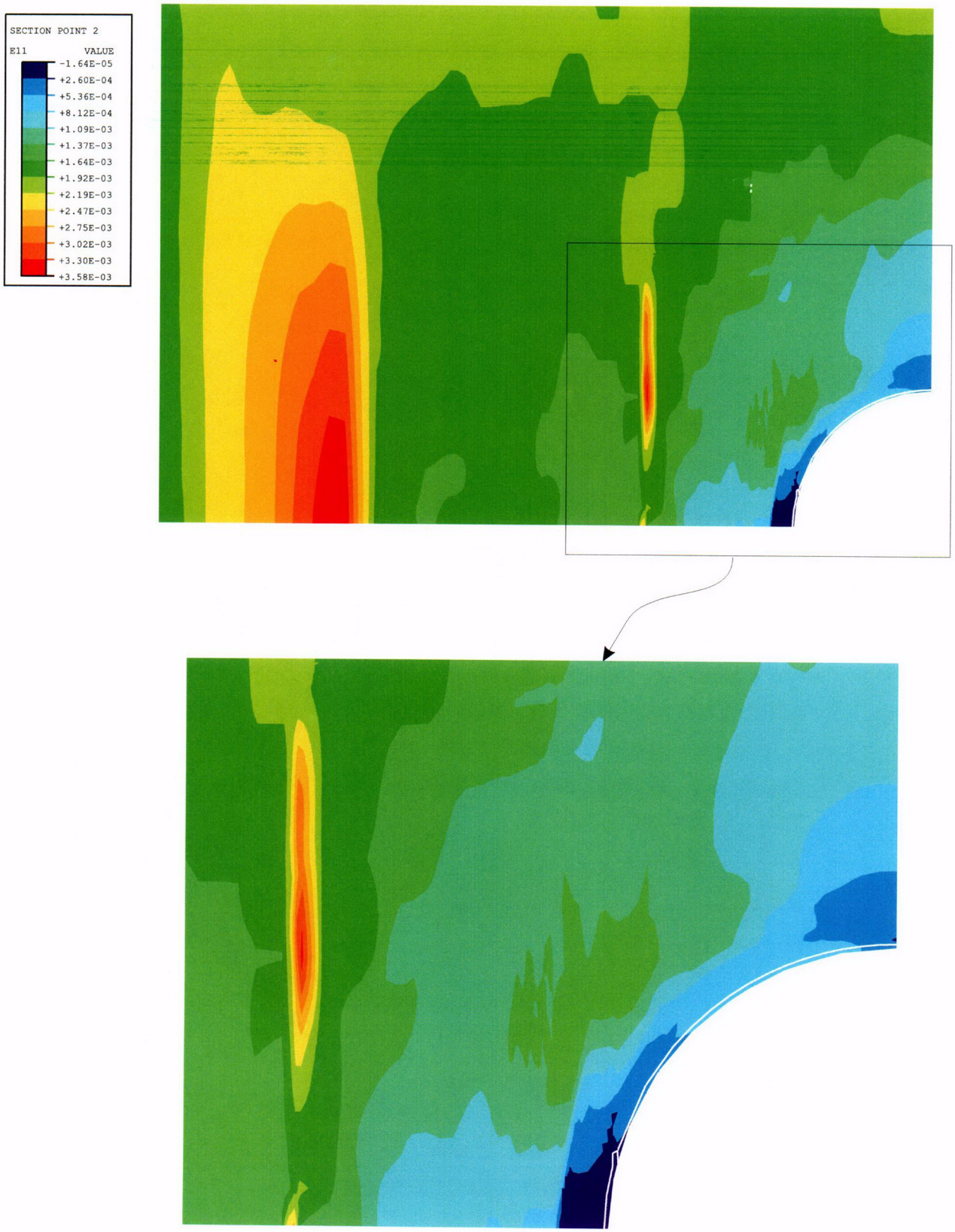

Figure 7-36. Liner Hoop Strains, Posttest Analysis Case E, at 2.8 Pd

C170

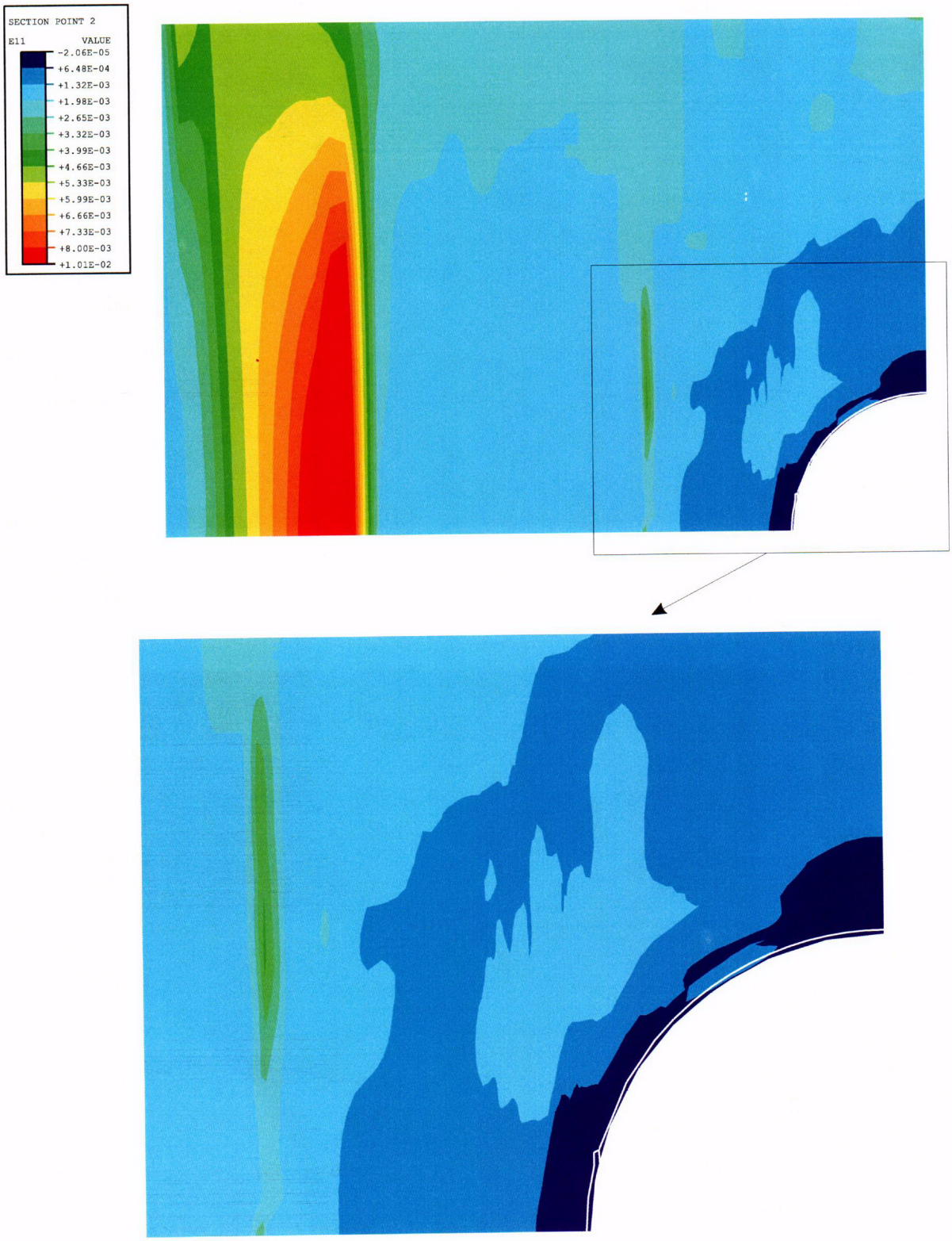

Figure 7-37. Liner Hoop Strains, Posttest Analysis Case E, at 3.0 Pd

C171

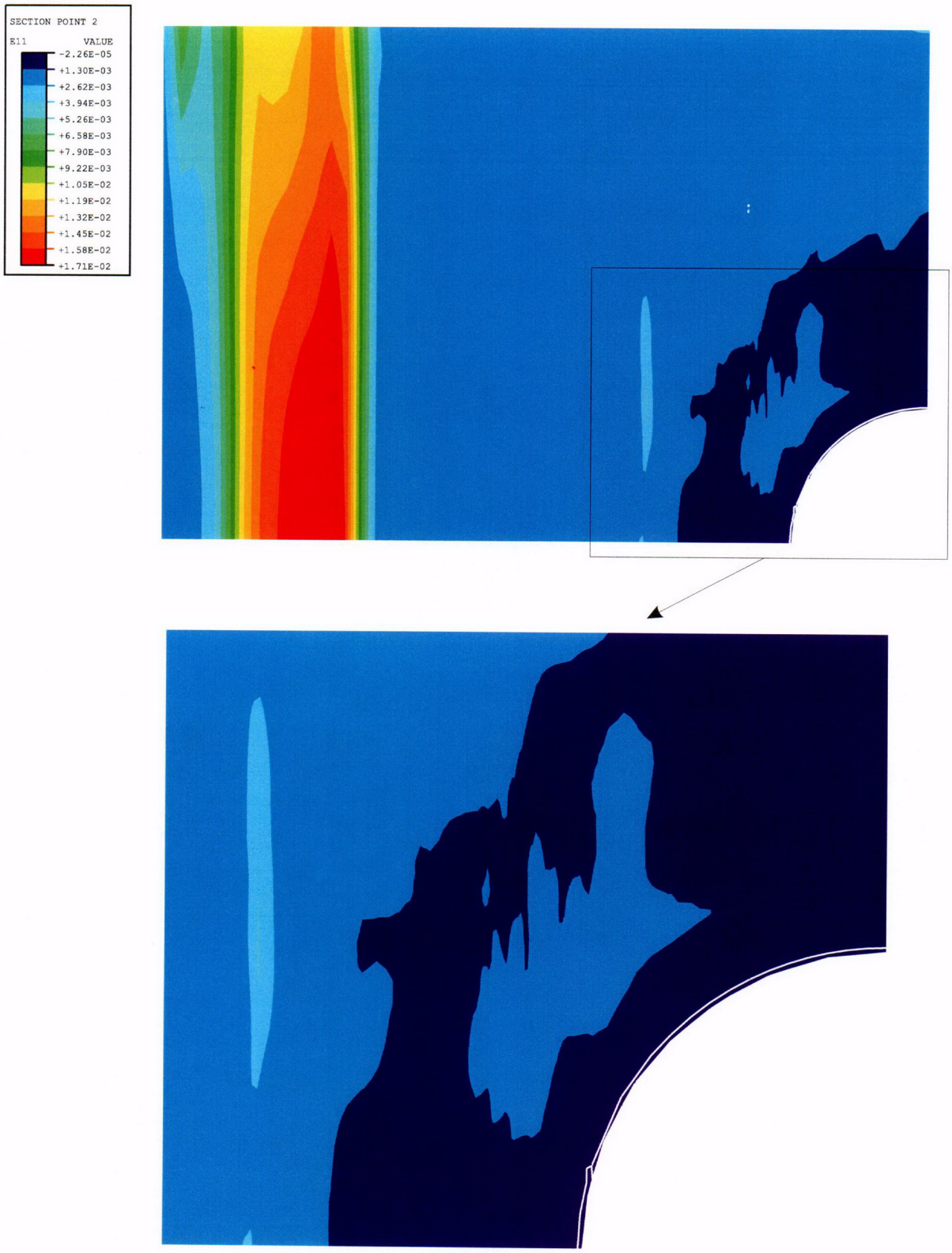

Figure 7-38. Liner Hoop Strains, Posttest Analysis Case E, at 3.2 Pd

C172

P = 3.5 Pd

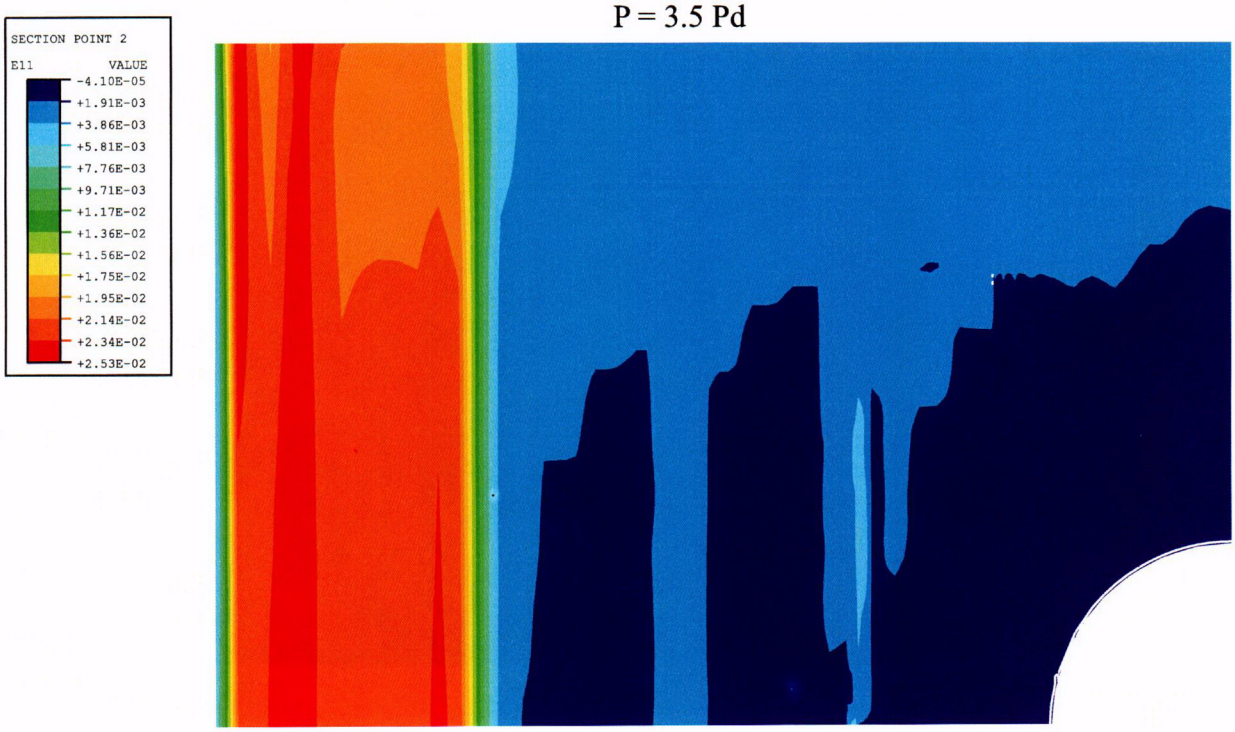

P = 3.6 Pd

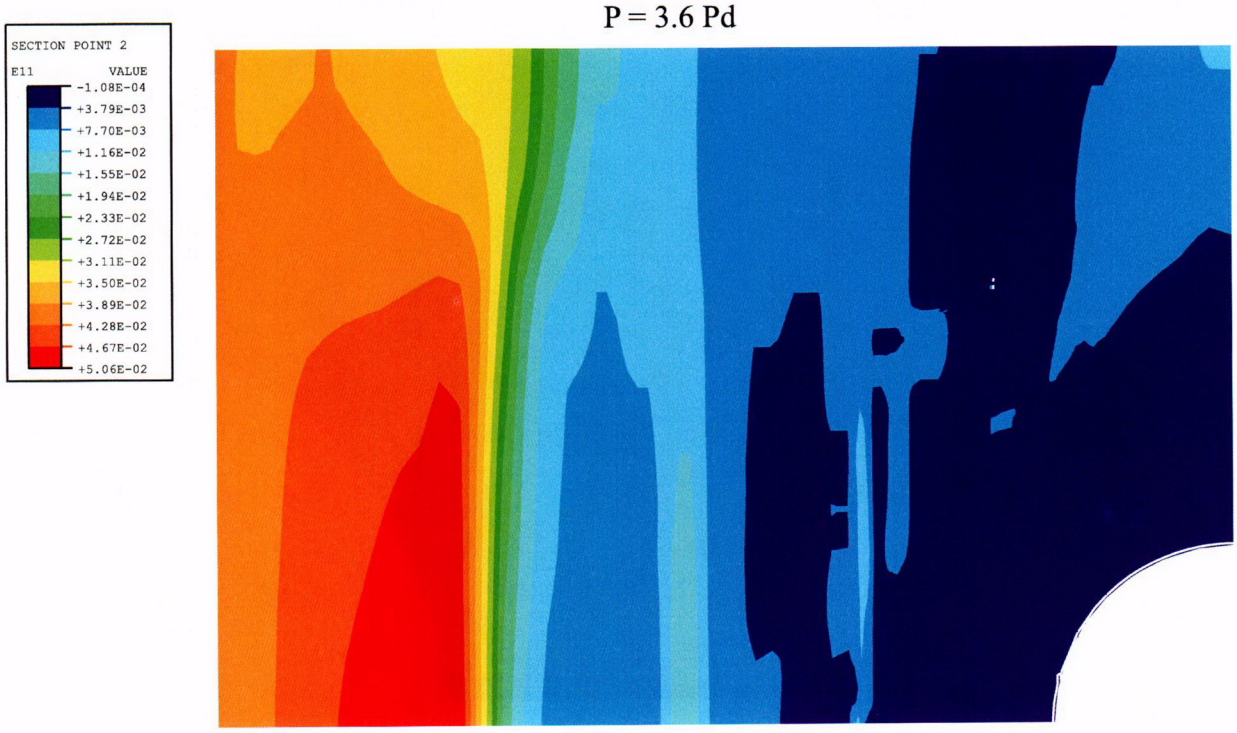

Figure 7-39. Liner Hoop Strains, Posttest Analysis Case E, at 3.5 Pd and 3.6 Pd

C173

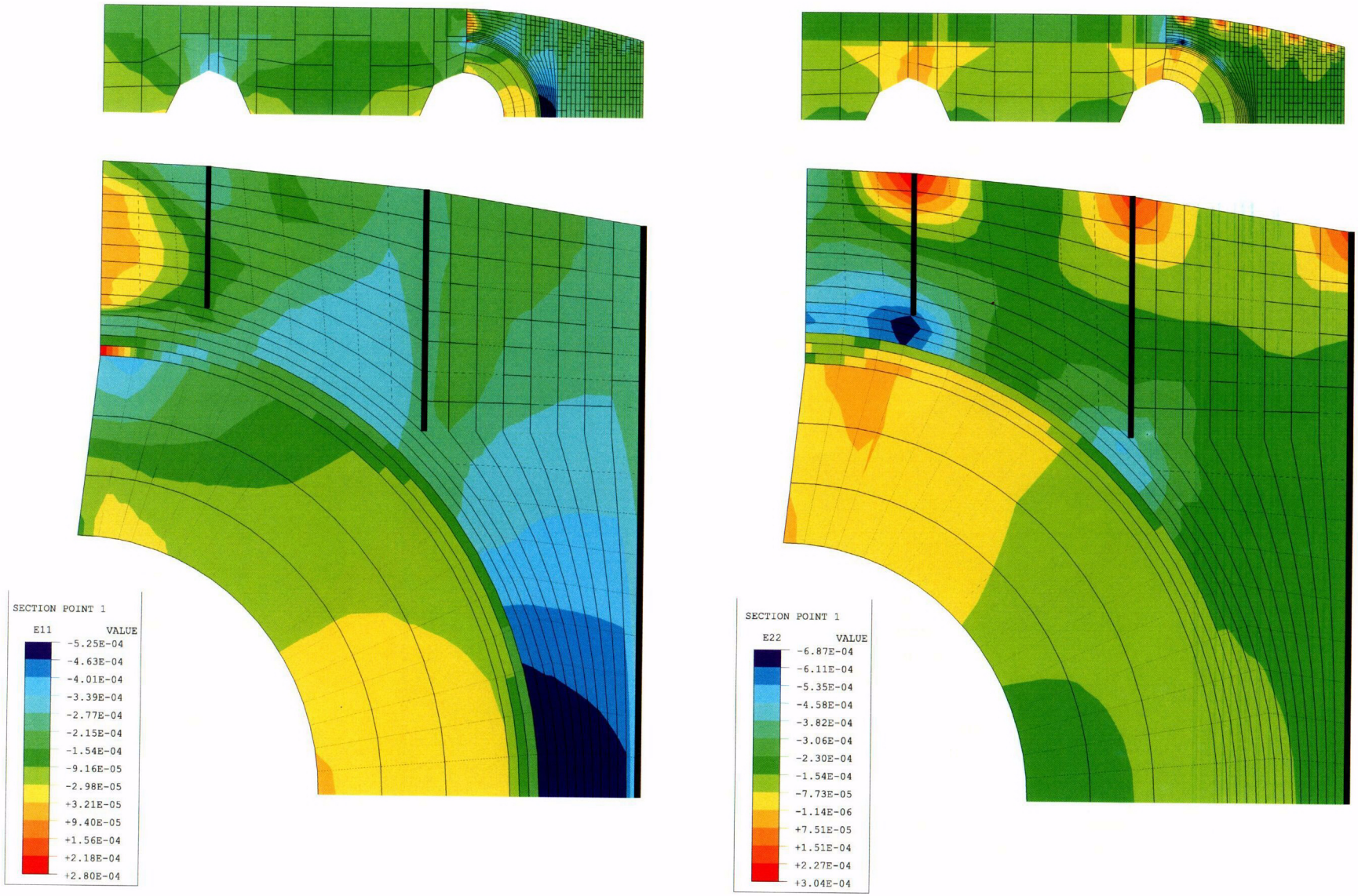

Figure 7-40. Hoop (Left) and Meridional (Right) Strains for Posttest M/S Analysis at Prestress

C174

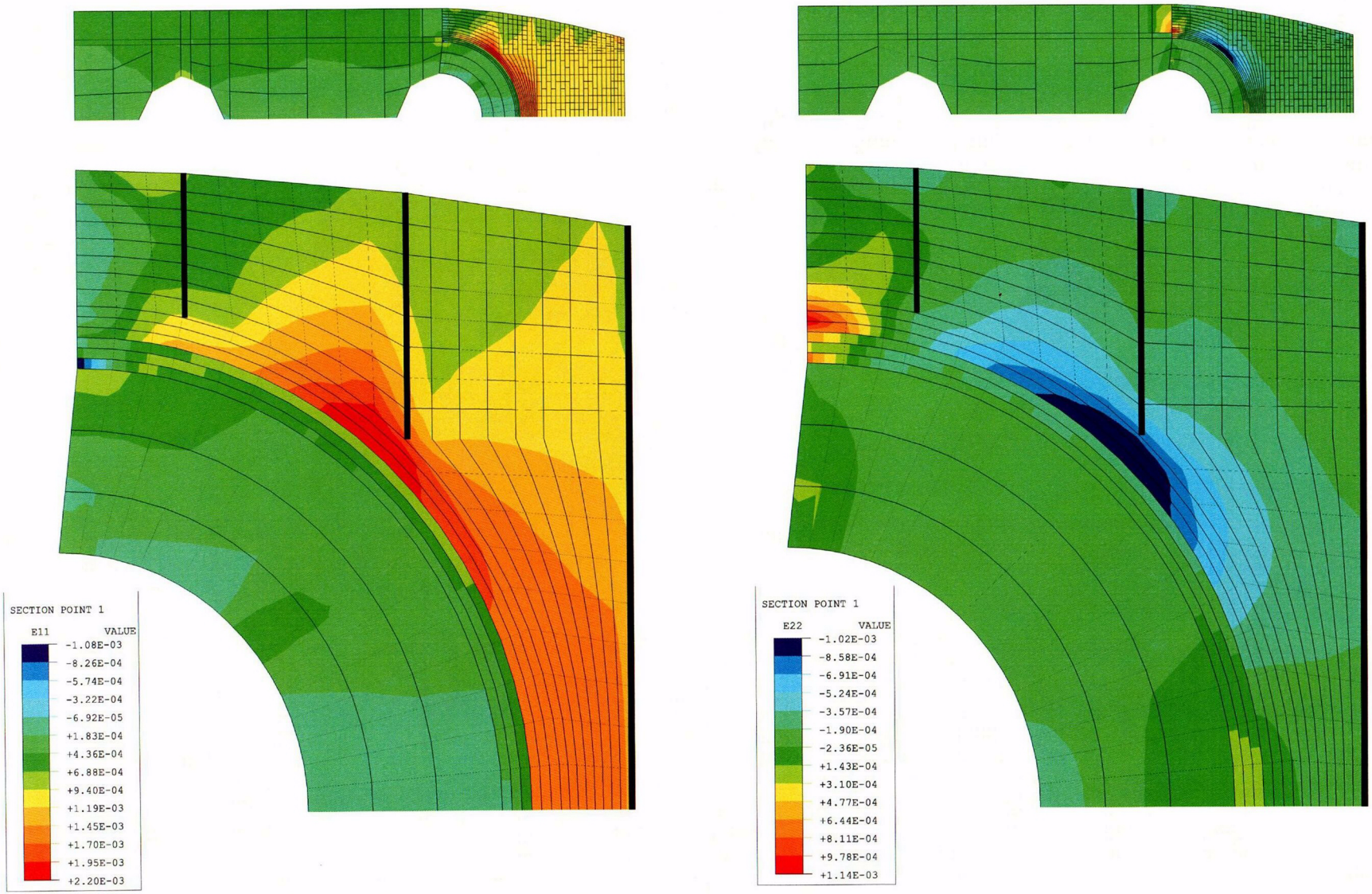

Figure 7-41. Hoop (Left) and Meridional (Right) Strains for Posttest M/S Analysis at P = 2.0 Pd

C175

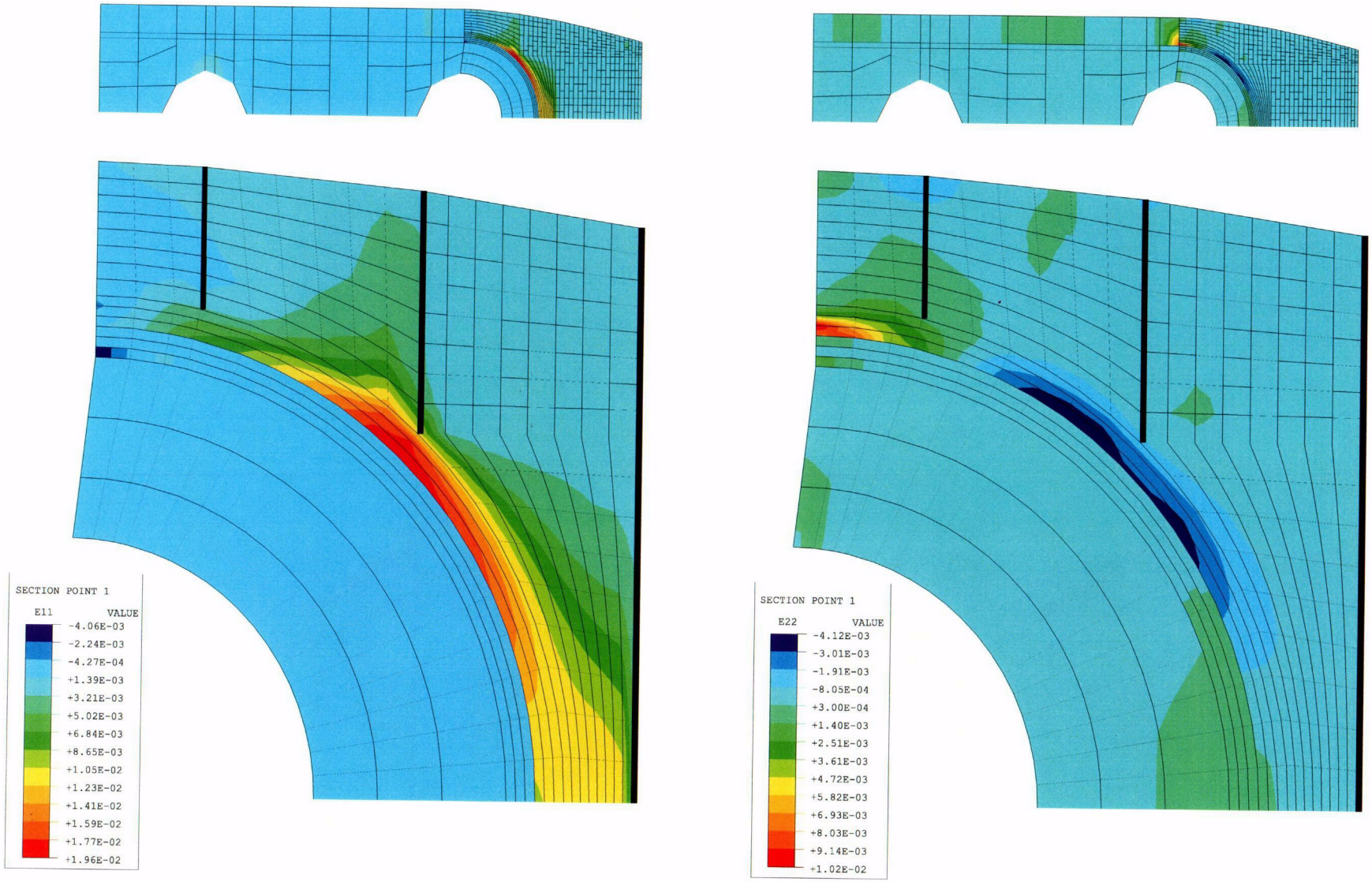

Figure 7-42. Hoop (Left) and Meridional (Right) Strains for Posttest M/S Analysis at P = 3.0 Pd

C176

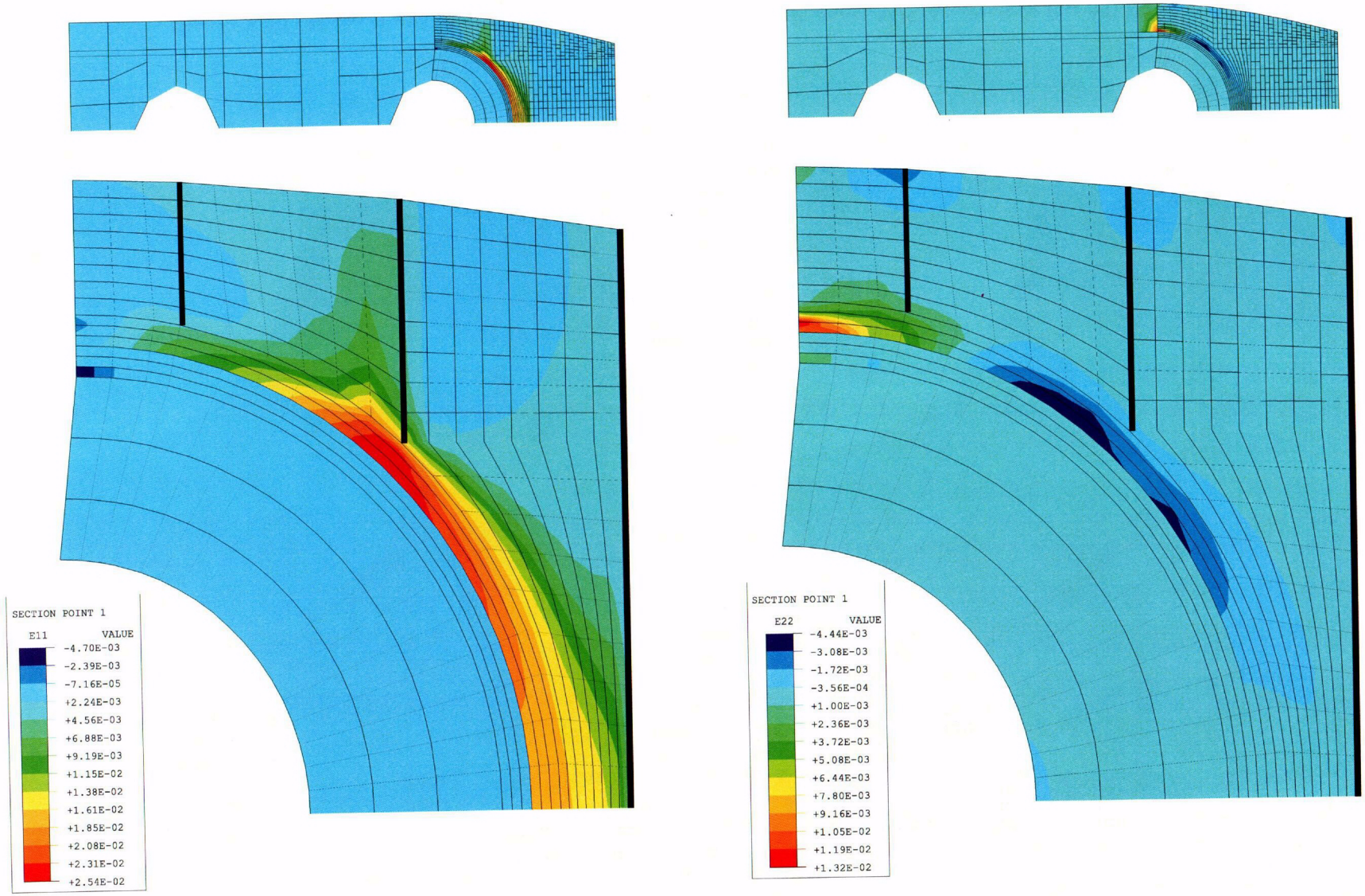

Figure 7-43. Hoop (Left) and Meridional (Right) Strains for Posttest M/S Analysis at P = 3.3 Pd

C177

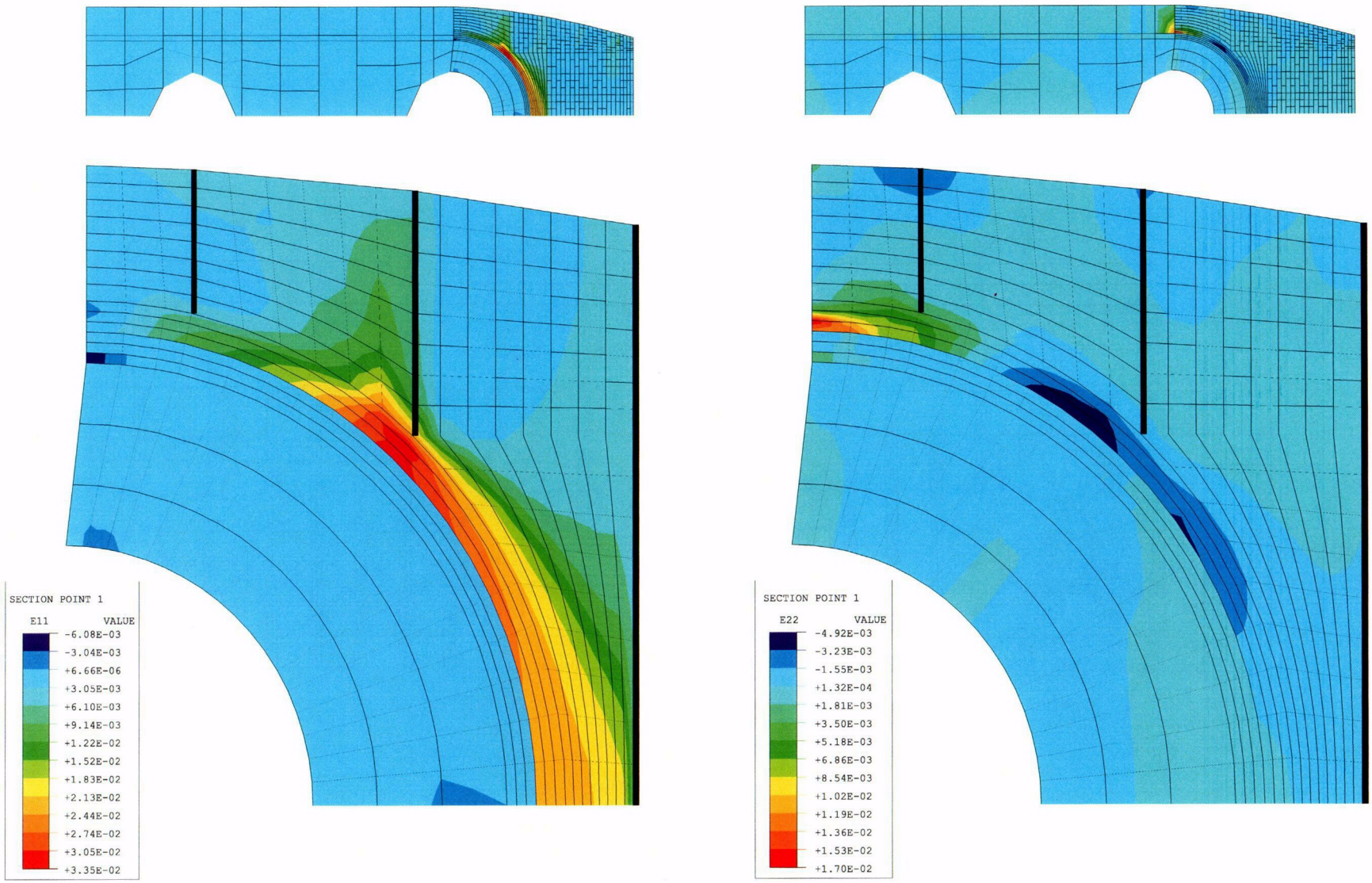

Figure 7-44. Hoop (Left) and Meridional (Right) Strains for Posttest M/S Analysis at P = 3.5 Pd

C178

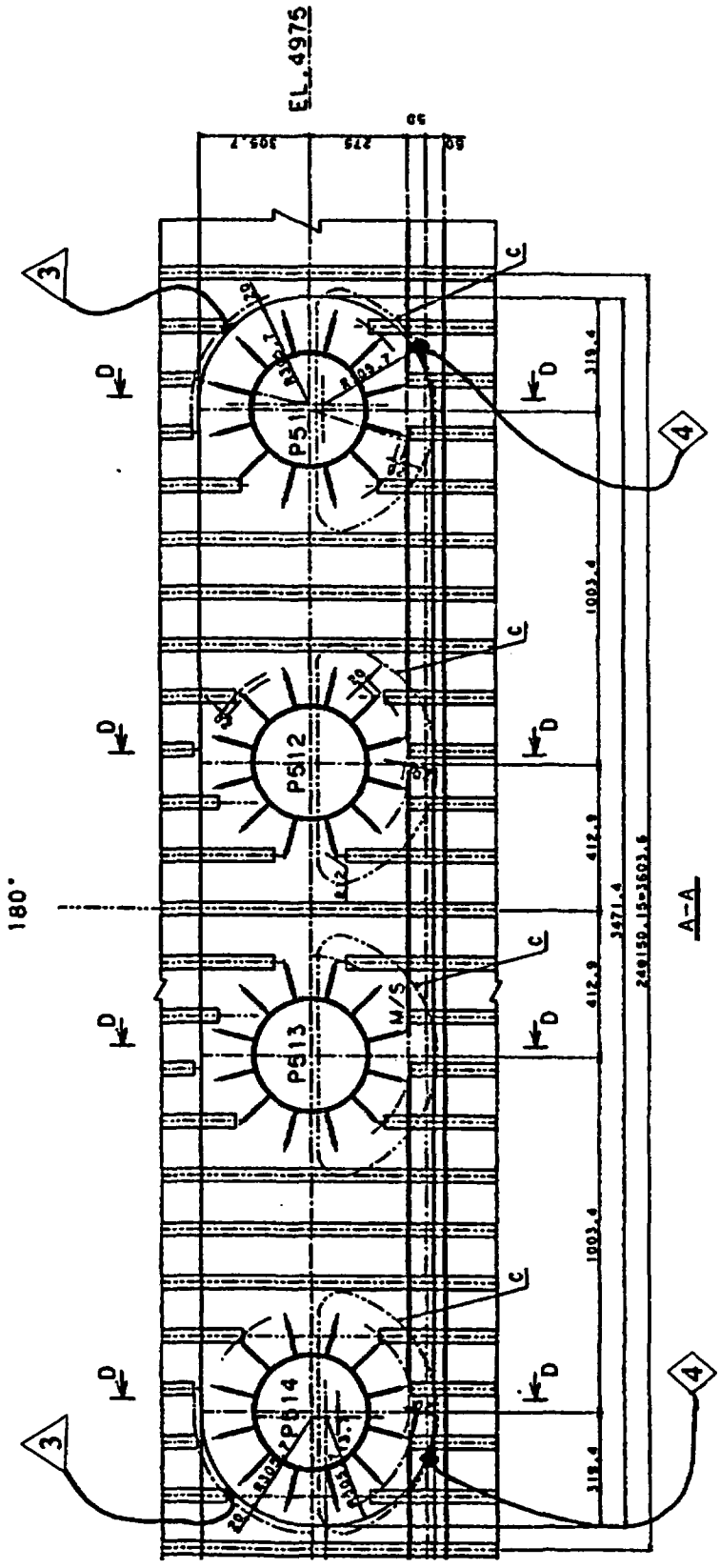

Figure 7-45. Strain Concentration Type 3 and 4 Near M/S Penetrations

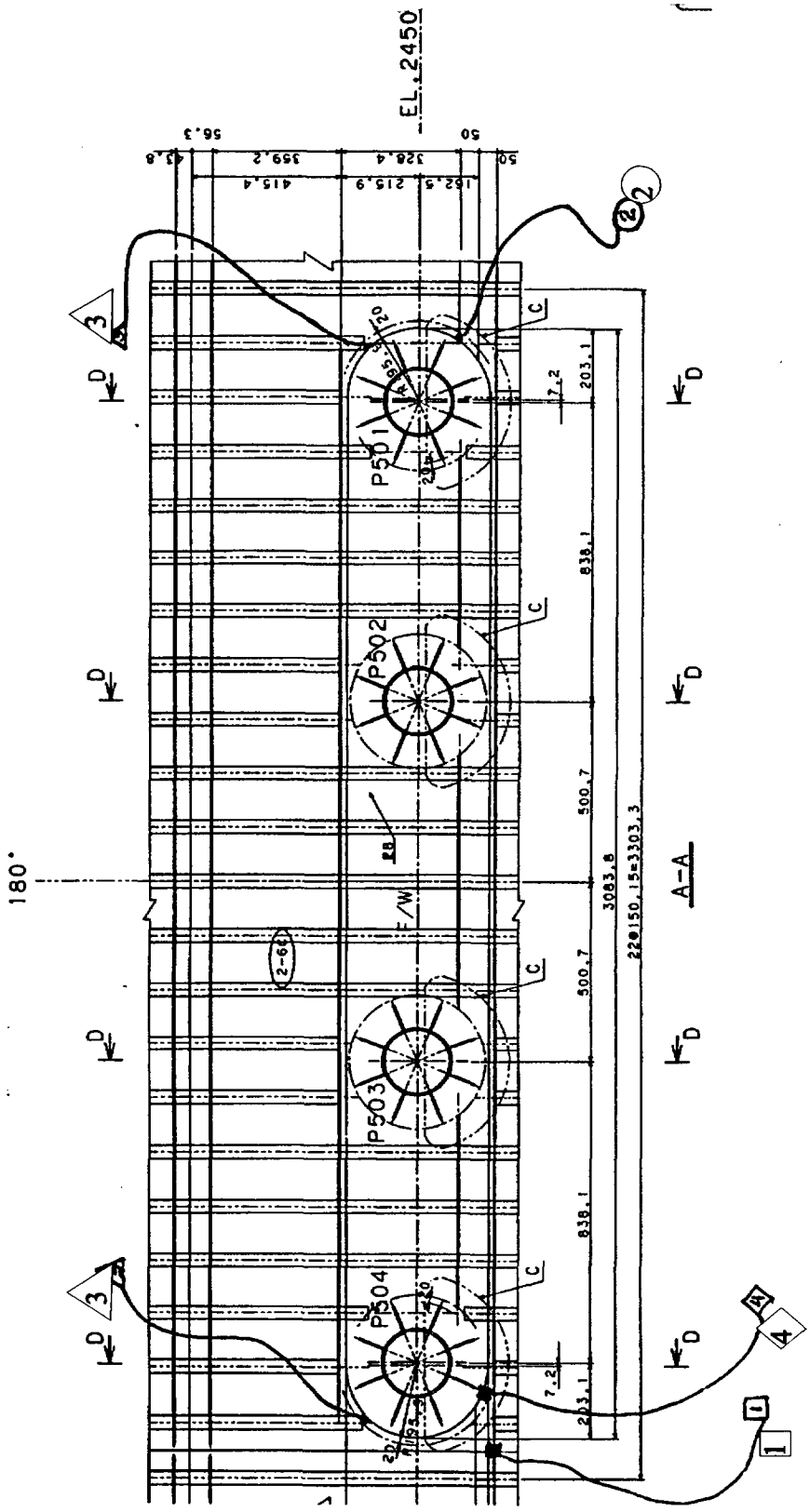

Figure 7-46. Strain Concentration Type 1, 2, 3, and 4 Near F/W Penetrations (from [1])

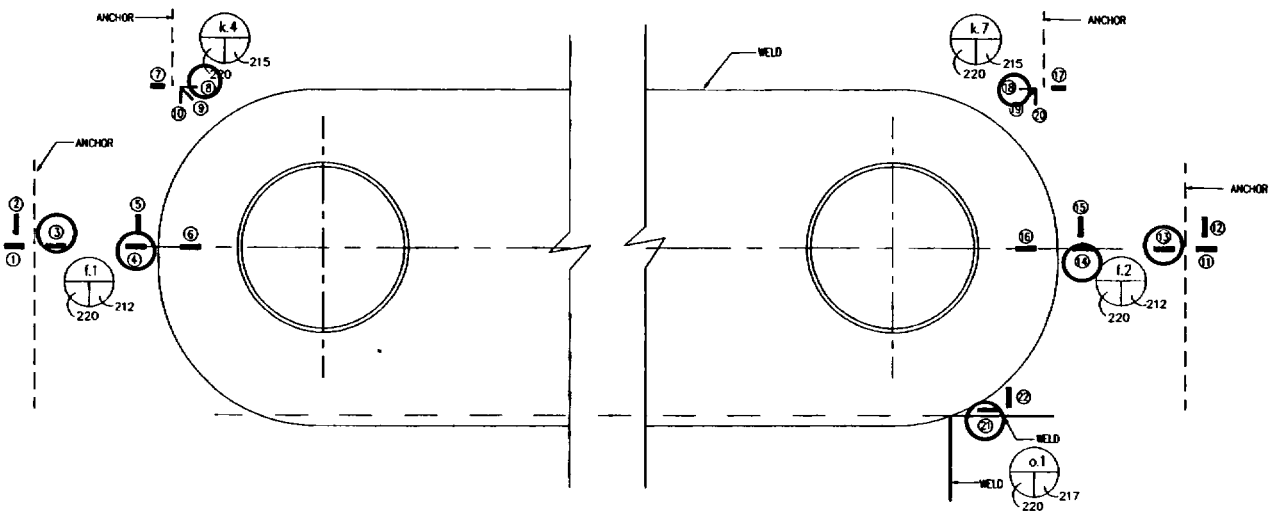

M/S - Inside View

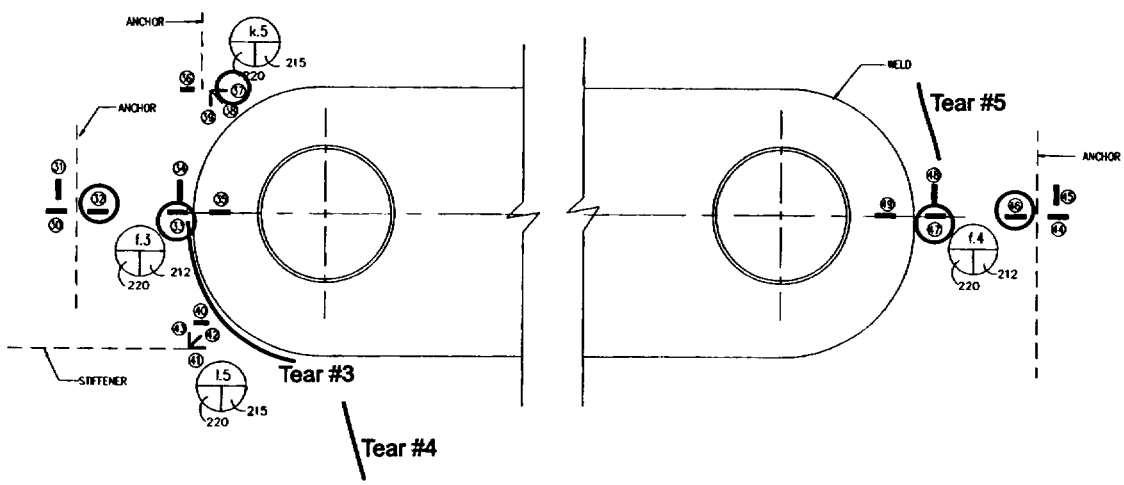

F/W - Inside View

Figure 7-47. Strain Gage Locations Near the M/S and F/W Penetrations

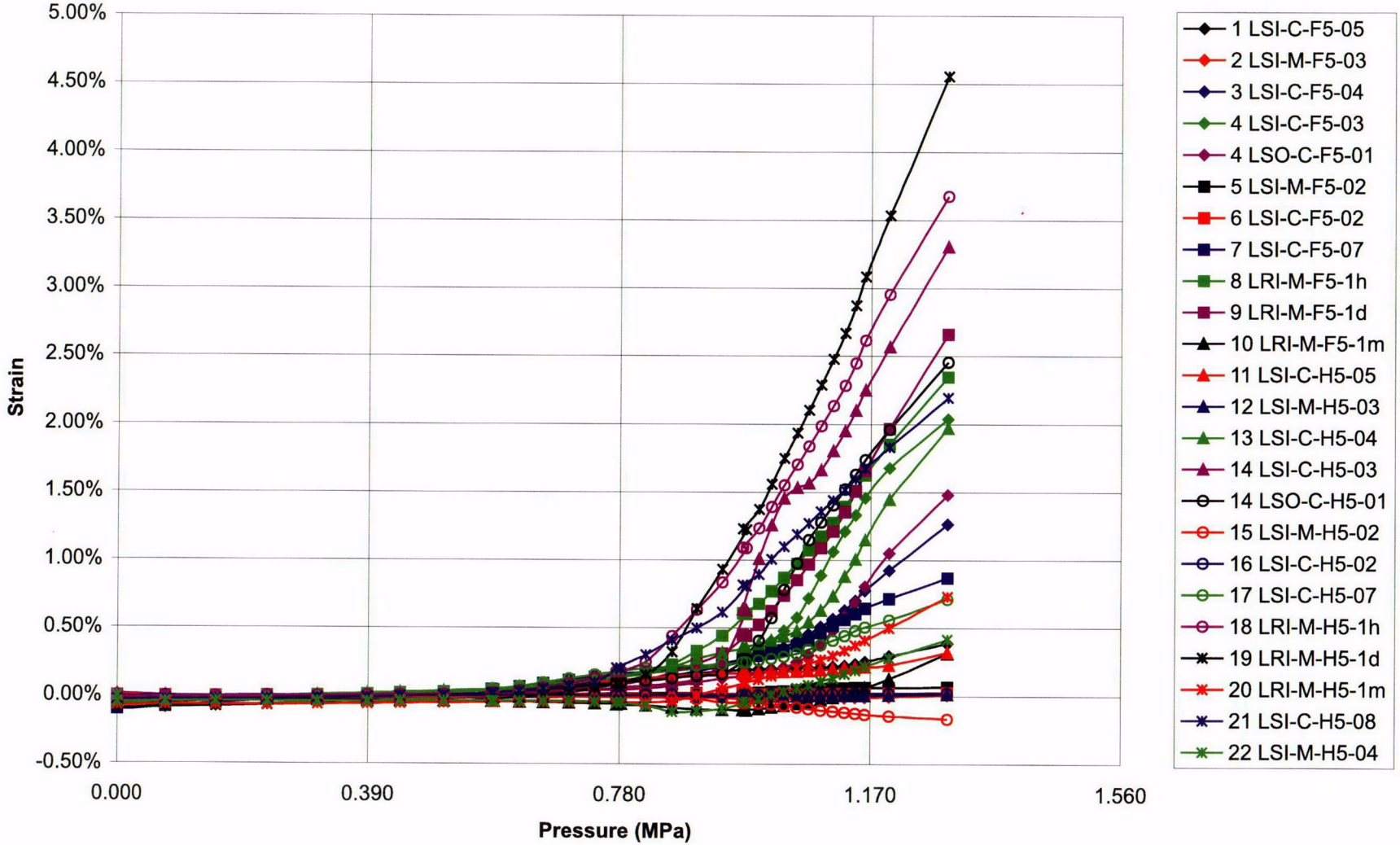

Figure 7-48. Liner Strain Histories Measured by the Gages Near the M/S Penetrations

C179

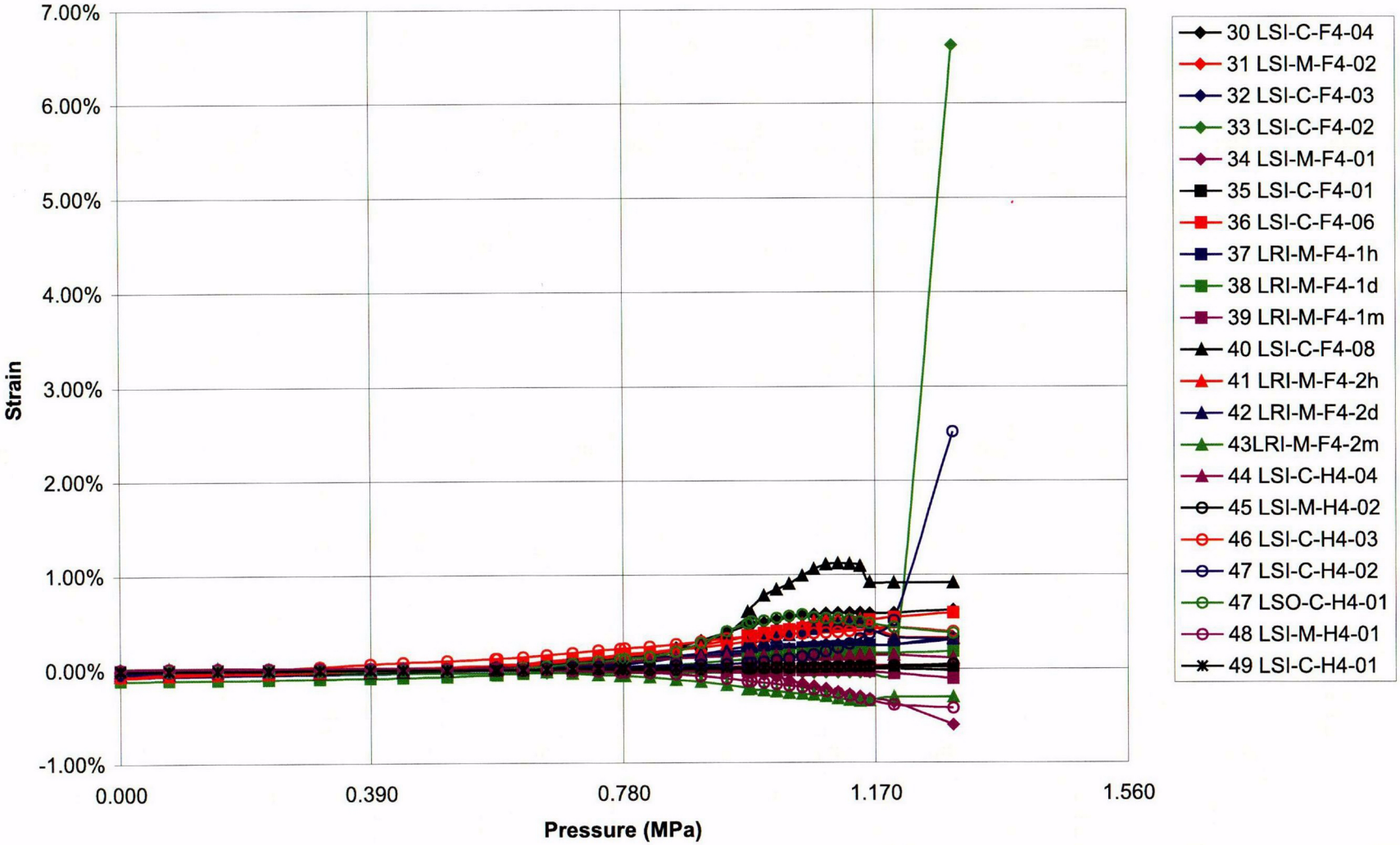

Figure 7-49. Linear Strain Histories Measured by the Gages Near the F/W Penetrations

C180