VIRGINIA ELECTRIC AND POWER COMPANY
RICHMOND, VIRGINIA 23261

July 3, 2003

U.S. Nuclear Regulatory Commission
Attention: Document Control Desk
Washington, D.C. 20555

Serial No. 03-395
NAPS/MPW
Docket Nos. 50-338/339
License Nos. NPF-4/7

Gentlemen:

VIRGINIA ELECTRIC AND POWER COMPANY
NORTH ANNA POWER STATION UNITS 1 AND 2
REVISIONS TO EMERGENCY PLAN IMPLEMENTING PROCEDURES

Pursuant to 10 CFR 50.54(q), enclosed are recent revisions to the North Anna Power Station Emergency Plan Implementing Procedures. These revisions do not implement actions that decrease the effectiveness of our Emergency Plan. The Emergency Plan and Implementing Procedures continue to meet the standards of 10 CFR 50.47(b).

Please update your manual by performing the actions described in Attachment 1, Tabulation of Changes.

Very truly yours,

D. A. Heacock
Site Vice President

Commitments Stated or Implied: None.

Enclosures

cc: U.S. Nuclear Regulatory Commission (2 copies)
Region II
Atlanta Federal Center
61 Forsyth St., SW, Suite 23T85
Atlanta, GA 30303

Mr. M. J. Morgan
NRC Senior Resident Inspector
North Anna Power Station

A045

ATTACHMENT 1
TABULATION OF CHANGES

VIRGINIA ELECTRIC AND POWER COMPANY
REVISIONS TO NORTH ANNA POWER STATION
EMERGENCY PLAN IMPLEMENTING PROCEDURES

Enclosed are recent revisions to the North Anna Power Station Emergency Plan Implementing Procedures (EPIPs). Please take the following actions in order to keep your manual updated.

REMOVE AND DESTROY	DATED	INSERT	EFFECTIVE DATE
EPIP - 1.01, Rev. 37	12/18/02	EPIP – 1.01, Rev. 38	07/01/03
EPIP - 4.01, Rev. 19	04/08/03	EPIP – 4.01, Rev. 20	07/01/03
EPIP - 4.02, Rev. 14	05/12/03	EPIP – 4.02, Rev. 15	07/01/03
EPIP - 4.09, Rev. 13	06/19/02	EPIP – 4.09, Rev. 14	07/01/03
EPIP - 4.22, Rev. 13	04/02/93	Delete	Delete
EPIP - 4.23, Rev. 14	04/09/02	Delete	Delete
EPIP - 4.25, Rev. 8	07/23/93	Delete	Delete
EPIP - 4.26, Rev. 11	09/13/01	EPIP – 4.26, Rev. 12	07/01/03
		EPIP – 4.35, Rev. 0	07/01/03
EPIP - 5.07, Rev. 11	08/02/00	EPIP – 5.07, Rev. 12	07/01/03

Emergency Plan Privacy and Proprietary Material has been removed. Reference Generic Letter No. 81-27.

NORTH ANNA POWER STATION
LIST OF NAPS EMERGENCY PLAN IMPLEMENTATION PROCEDURES
CHECK DMIS FOR LATEST DOCUMENT INFORMATION

DOCUMENT NUMBER	REV	APPROVAL **DATE**	EFFECT** **DATE**	DOCUMENT TITLE
EPIP-1.01	038	06/24/03	07/01/03	EMERGENCY MANAGER CONTROLLING PROCEDURE
EPIP-1.02	011	09/07/99	10/01/99	RESPONSE TO NOTIFICATION OF UNUSUAL EVENT
EPIP-1.03	014	09/07/99	10/01/99	RESPONSE TO ALERT
EPIP-1.04	014	09/07/99	10/01/99	RESPONSE TO SITE AREA EMERGENCY
EPIP-1.05	016	09/07/99	10/01/99	RESPONSE TO GENERAL EMERGENCY
EPIP-1.06	004	09/05/01	09/05/01	PROTECTIVE ACTION RECOMMENDATIONS
EPIP-2.01	025	08/13/02	08/28/02	NOTIFICATION OF STATE AND LOCAL GOVERNMENTS
EPIP-2.02	015	08/13/02	08/28/02	NOTIFICATION OF NRC
EPIP-3.02	021	03/04/03	03/17/03	ACTIVATION OF TECHNICAL SUPPORT CENTER
EPIP-3.03	013	03/04/03	03/17/03	ACTIVATION OF OPERATIONAL SUPPORT CENTER
EPIP-3.04	015	07/14/98	07/20/98	ACTIVATION OF LOCAL EMERGENCY OPERATIONS FACILITY
EPIP-3.05	002	04/02/03	04/08/03	AUGMENTATION OF EMERGENCY RESPONSE ORGANIZATION
EPIP-4.01	020	06/24/03	07/01/03	RADIOLOGICAL ASSESSMENT DIRECTOR CONTROLLING PROCEDURE
EPIP-4.02	015	06/24/03	07/01/03	RADIATION PROTECTION SUPERVISOR CONTROLLING PROCEDURE
EPIP-4.03	011	12/20/93	01/01/94	DOSE ASSESSMENT TEAM CONTROLLING PROCEDURE
EPIP-4.04	009	11/21/94	11/28/94	EMERGENCY PERSONNEL RADIATION EXPOSURE
EPIP-4.05	009	01/28/00	02/04/00	RESPIRATORY PROTECTION AND KI ASSESSMENT
EPIP-4.06	009	12/21/95	12/28/95	PERSONNEL MONITORING AND DECONTAMINATION
EPIP-4.07	014	09/29/00	10/06/00	PROTECTIVE MEASURES
EPIP-4.08	014	05/10/02	06/19/02	INITIAL OFFSITE RELEASE ASSESSMENT
EPIP-4.09	014	06/24/03	07/01/03	SOURCE TERM ASSESSMENT
EPIP-4.10	011	08/13/02	08/28/02	DETERMINATION OF X/Q
EPIP-4.13	009	09/29/00	10/06/00	OFFSITE RELEASE ASSESSMENT WITH ENVIRONMENTAL DATA

NORTH ANNA POWER STATION
LIST OF NAPS EMERGENCY PLAN IMPLEMENTATION PROCEDURES
CHECK DMIS FOR LATEST DOCUMENT INFORMATION

DOCUMENT NUMBER	REV	APPROVAL **DATE**	EFFECT** **DATE**	DOCUMENT TITLE
EPIP-4.14	007	12/20/93	01/01/94	INPLANT MONITORING
EPIP-4.15	011	02/18/00	02/28/00	ONSITE MONITORING
EPIP-4.16	015	12/13/02	12/18/02	OFFSITE MONITORING
EPIP-4.17	016	12/13/02	12/18/02	MONITORING OF EMERGENCY RESPONSE FACILITIES
EPIP-4.18	013	12/13/02	12/18/02	MONITORING OF LEOF
EPIP-4.21	008	12/20/93	01/01/94	EVACUATION AND REMOTE ASSEMBLY AREA MONITORING
EPIP-4.22	014	04/05/02	04/09/02	POST ACCIDENT SAMPLING OF CONTAINMENT AIR
EPIP-4.23	014	04/05/02	04/09/02	POST ACCIDENT SAMPLING OF REACTOR COOLANT
EPIP-4.24	013	04/02/03	04/08/03	GASEOUS EFFLUENT SAMPLING DURING AN EMERGENCY
EPIP-4.25	008	07/23/93	07/23/93	LIQUID EFFLUENT SAMPLING DURING AN EMERGENCY
EPIP-4.26	012	06/24/03	07/01/03	HIGH LEVEL ACTIVITY SAMPLE ANALYSIS
EPIP-4.28	007	01/09/97	01/14/97	TSC/LEOF RADIATION MONITORING SYSTEM
EPIP-4.30	005	04/05/02	04/09/02	USE OF MIDAS CLASS A MODEL
EPIP-4.31	003	06/20/94	06/20/94	USE OF MIDAS CLASS B MODEL
EPIP-4.33	003	11/28/00	11/30/00	HEALTH PHYSICS NETWORK COMMUNICATIONS
EPIP-4.34	003	12/13/02	12/18/02	FIELD TEAM RADIO OPERATOR INSTRUCTIONS
EPIP-4.35	000	06/24/03	07/01/03	CHEMISTRY SAMPLING
EPIP-5.01	011	12/11/96	12/17/96	TRANSPORTATION OF CONTAMINATED INJURED PERSONNEL
EPIP-5.03	016	02/18/00	02/28/00	PERSONNEL ACCOUNTABILITY
EPIP-5.04	010	03/04/03	03/17/03	ACCESS CONTROL
EPIP-5.05	013	06/25/96	07/02/96	SITE EVACUATION
EPIP-5.07	012	06/24/03	07/01/03	ADMINISTRATION OF RADIOPROTECTIVE DRUGS
EPIP-5.08	008	04/02/03	04/08/03	DAMAGE CONTROL GUIDELINE

NORTH ANNA POWER STATION
LIST OF NAPS EMERGENCY PLAN IMPLEMENTATION PROCEDURES
CHECK DMIS FOR LATEST DOCUMENT INFORMATION

DOCUMENT NUMBER	REV	APPROVAL **DATE**	EFFECT** **DATE**	DOCUMENT TITLE
EPIP-5.09	004	08/02/02	08/15/02	SECURITY TEAM LEADER CONTROLLING PROCEDURE
EPIP-6.01	007	05/12/99	05/17/99	RE-ENTRY/RECOVERY GUIDELINE

VIRGINIA POWER
NORTH ANNA POWER STATION
EMERGENCY PLAN IMPLEMENTING PROCEDURE

NUMBER	PROCEDURE TITLE	REVISION
EPIP-1.01	EMERGENCY MANAGER CONTROLLING PROCEDURE (With 3 Attachments)	38
		PAGE 1 of 7

PURPOSE

To assess potential emergency conditions and initiate corrective actions.

LEVEL 2 DISTRIBUTION
This Document Should Be Verified
And Annotated To A Controlled Source
As Required to Perform Work

ENTRY CONDITIONS

Any of the following:

1. Another station procedure directs initiation of this procedure.
2. A potential emergency condition is reported to the Shift Manager.

Approvals on File

Effective Date 7/1/2003

STEP	ACTION/EXPECTED RESPONSE	RESPONSE NOT OBTAINED

* *

CAUTION: Declaration of the highest emergency class for which an Emergency Action Level is exceeded shall be made.

* *

NOTE: The PCS is potentially unreliable in the event of an earthquake. Therefore, PCS parameters should be evaluated for accuracy should this situation occur.

_____ 1 EVALUATE EMERGENCY ACTION LEVELS:

a) Determine event category using Attachment 1, EMERGENCY ACTION LEVEL TABLE INDEX

b) Review EAL Tab associated with event category

c) Use Control Room monitors, PCS, and outside reports to get indications of emergency conditions listed in the EAL Table

d) Verify EAL - CURRENTLY EXCEEDED

d) IF basis for EAL no longer exists when discovered AND no other reasons exist for an emergency declaration, THEN do the following:

- RETURN TO procedure in effect.
- GO TO VPAP-2802, NOTIFICATIONS AND REPORTS, to make one-hour, non-emergency reports for classification without declaration.

IF EAL was NOT exceeded, THEN RETURN TO procedure in effect.

(STEP 1 CONTINUED ON NEXT PAGE)

STEP	ACTION/EXPECTED RESPONSE	RESPONSE NOT OBTAINED

1 EVALUATE EMERGENCY ACTION LEVELS: (Continued)

e) Record procedure initiation:

- By: _____
  Date: _____
  Time: _____

f) Initiate a chronological log of events

g) Declare position of Station Emergency Manager

NOTE: Assembly, accountability and/or initiation of facility staffing may not be desired during certain situations (e.g., security event, severe weather, anticipated grid disturbance) or may have already been completed. These activities should be implemented as quickly as achievable given the specific situation.

_____ 2 CHECK - CONDITIONS ALLOW FOR NORMAL IMPLEMENTATION OF EMERGENCY RESPONSE ACTIONS

IF deviation from normal emergency response actions warranted, THEN do the following:

a) Refer to Attachment 3, Considerations for Operations Response Under Abnormal Conditions.

b) Consider applicability of 50.54(x).

c) IF classification/assembly announcement deferred, THEN GO TO Step 4.

STEP	ACTION/EXPECTED RESPONSE	RESPONSE NOT OBTAINED
_____ 3	NOTIFY PLANT STAFF OF ALERT OR HIGHER CLASSIFICATION:	
	a) Check classification - ALERT OR HIGHER	a) GO TO Step 4.
	b) Check if emergency assembly and accountability - PREVIOUSLY CONDUCTED	b) Do the following: 1) Have Control Room sound EMERGENCY alarm and make announcement on station Gai-Tronics system as follows: "(Emergency classification) has been declared as the result of _____ (event)" "All Emergency Response personnel report to your assigned stations" "All contractor personnel not responding to the emergency and all visitors report to the Security Building" "All other personnel report to your Emergency Assembly Areas" 2) Repeat RNO Step 3.b.1. 3) GO TO Step 4.
	c) Have Control Room sound EMERGENCY alarm and make announcement on station Gai-Tronics system as follows: "(Emergency classification) has been declared as the result of _____ (event)"	
	d) Repeat Step 3.c	

STEP	ACTION/EXPECTED RESPONSE	RESPONSE NOT OBTAINED

* *

CAUTION: Continue through this and all further instructions unless otherwise directed to hold.

* *

_____ 4 INITIATE SUPPORTING PROCEDURES:

a) Direct Emergency Communicators to initiate the following procedures:

1) EPIP-2.01, NOTIFICATION OF STATE AND LOCAL GOVERNMENTS

2) EPIP-2.02, NOTIFICATION OF NRC

b) Direct HP to initiate EPIP-4.01, RADIOLOGICAL ASSESSMENT DIRECTOR CONTROLLING PROCEDURE

c) Establish communications with Security Team Leader:

1) Provide Security with current emergency classification

2) Notify Security which Operations Shift is designated for coverage

3) Direct Security to initiate EPIP-5.09, SECURITY TEAM LEADER CONTROLLING PROCEDURE

STEP	ACTION/EXPECTED RESPONSE	RESPONSE NOT OBTAINED
_____ 5	CHECK TSC - ACTIVATED	IF TSC NOT activated, THEN do the following: a) Have STA report to the Control Room. b) Notify Manager Nuclear Operations or Operations Manager On Call. c) Consider having Radiological Assessment Director report to the Control Room. d) WHEN relief SEM arrives, THEN perform turnover using EPIP-1.01, Attachment 2, Turnover Checklist.
_____ 6	IMPLEMENT EPIP FOR EMERGENCY CLASSIFICATION IN EFFECT: • **Notification of Unusual Event** - GO TO EPIP-1.02, RESPONSE TO NOTIFICATION OF UNUSUAL EVENT • **Alert** - GO TO EPIP-1.03, RESPONSE TO ALERT • **Site Area Emergency** - GO TO EPIP-1.04, RESPONSE TO SITE AREA EMERGENCY • **General Emergency** - GO TO EPIP-1.05, RESPONSE TO GENERAL EMERGENCY	

STEP	ACTION/EXPECTED RESPONSE	RESPONSE NOT OBTAINED

_____ 7 NOTIFY OFFSITE AUTHORITIES OF EMERGENCY TERMINATION:

a) State and local governments (made by LEOF or CEOF when activated)

b) NRC

_____ 8 NOTIFY STATION PERSONNEL ABOUT THE FOLLOWING:

- Emergency termination
- Facility de-activation
- Selective release of personnel
- Completion and collection of procedures
- Recovery

_____ 9 TERMINATE EPIP-1.01:

- Give completed EPIPs, forms and other applicable records to Nuclear Emergency Preparedness (TSC Emergency Procedures Coordinator if TSC activated)
- Completed By: _____

  Date: _____

  Time: _____

-END-

****

CAUTION:
- Declaration of the highest emergency class for which an EAL is exceeded shall be made.
- Emergency Action Levels shall be conservatively classified based on actual or anticipated plant conditions.

****

	EVENT CATEGORY:	TAB
1.	Safety, Shutdown, or Assessment System Event	A
2.	Reactor Coolant System Event	B
3.	Fuel Failure or Fuel Handling Accident	C
4.	Containment Event	D
5.	Radioactivity Event	E
6.	DELETED	
7.	Loss of Secondary Coolant	G
8.	Electrical Failure	H
9.	Fire	I
10.	Security Event	J
11.	Hazard to Station Operation	K
12.	Natural Events	L
13.	Miscellaneous Abnormal Events	M

CONDITION/APPLICABILITY	INDICATION	CLASSIFICATION
CAUTION: EAL C.2 is duplicated below for cross-reference/comparison to EAL A.1:		
C.2. Probable large radioactivity release initiated by loss of heat sink leading to core degradation MODES 1, 2, 3 & 4	Loss of Main Feedwater System, Condensate System and Auxiliary Feedwater System	GENERAL EMERGENCY
1. Loss of function needed for unit HSD condition MODES 1, 2, 3 & 4	• Total loss of the Charging/SI System OR Total loss of the Main Feedwater and Auxiliary Feedwater systems	SITE AREA EMERGENCY
2. Failure of the Reactor Protection System to initiate and complete a required trip while at power MODES 1 & 2	• Reactor trip setpoint and coincidences - EXCEEDED AND • Automatic trip from RPS - FAILED AND • Manual trip from Control Room - FAILED	SITE AREA EMERGENCY

CONDITION/APPLICABILITY	INDICATION	CLASSIFICATION
3. Inability to monitor a significant transient in progress MODES 1, 2, 3 & 4	• Most (>75%) or all annunciator alarms on panels "A" to "K" - NOT AVAILABLE AND • All computer monitoring capability (e.g., PCS) - NOT AVAILABLE AND • Significant transient - IN PROGRESS (e.g., reactor trip, SI actuation, turbine runback >25% thermal reactor power, thermal power oscillations >10%) AND • Inability to directly monitor any one of the following using Control Room indications: • Subcriticality • Core Cooling • Heat Sink • Vessel Integrity • Containment Integrity	SITE AREA EMERGENCY
4. Evacuation of Main Control Room with control not established within 15 minutes ALL MODES	Evacuation of the Control Room with local shutdown control not established within 15 minutes	SITE AREA EMERGENCY

CONDITION/APPLICABILITY	INDICATION	CLASSIFICATION

5. Total loss of function needed for unit CSD condition
 	
MODES 5 & 6
	• Secondary system cooling capability - UNAVAILABLE
	
	AND
	
	• Loss of any of the following systems:
	
	  • Service Water
	  • Component Cooling
	  • RHR
	
	AND
	
	• RCS temperature GREATER THAN 140 °F
		ALERT

6. Failure of the Reactor Protection System to complete a trip which takes the Reactor Subcritical MODES 1 & 2	• Reactor trip setpoint and coincidences - EXCEEDED AND • Automatic trip from RPS - FAILED AND • Manual trip - REQUIRED AND • Manual trip from Control Room - SUCCESSFUL	ALERT

CONDITION/APPLICABILITY	INDICATION	CLASSIFICATION
7. Unplanned loss of safety system annunciators with compensatory indicators unavailable or a transient in progress MODES 1, 2, 3 & 4	• Unplanned loss of most (>75%) or all annunciator alarms on panels "A" to "K" for GREATER THAN 15 minutes AND • All computer monitoring capability (e.g., PCS) - NOT AVAILABLE OR Significant transient - INITIATED OR IN PROGRESS (e.g., reactor trip, SI, turbine runback > 25% thermal reactor power, thermal power oscillations > 10%)	ALERT
8. Evacuation of Main Control Room required ALL MODES	Evacuation of the Control Room with shutdown control established within 15 minutes	ALERT
9. Inability to reach required mode within technical specification limits MODES 1, 2, 3 & 4	• Intentional reduction in power, load or temperature IAW T.S. Action Statement - HAS COMMENCED AND • T.S. Action Statement time limit for mode change - CANNOT BE MET	NOTIFICATION OF UNUSUAL EVENT

CONDITION/APPLICABILITY	INDICATION	CLASSIFICATION
10. Failure of a safety or relief valve to close after pressure reduction, which may affect the health and safety of the public MODES 1, 2, 3, 4 & 5	• RCS • RCS pressure - LESS THAN 2000 psig OR NDT Protection System - IN SERVICE AND • Any indication after lift or actuation that Pressurizer Safety or PORV - REMAINS OPEN AND • Flow - UNISOLABLE • Main Steam • Excessive Steam Generator Safety, PORV or Decay Heat Release flow as indicated by rapid RCS cooldown rate AND • Main Steam pressure greater than 100 psi below setpoint of affected valve	NOTIFICATION OF UNUSUAL EVENT
11. Unplanned loss of most or all safety system annunciators for greater than 15 minutes MODES 1, 2, 3 & 4	• Unplanned loss of most (>75%) or all annunciators on panels "A" to "K" for GREATER THAN 15 minutes	NOTIFICATION OF UNUSUAL EVENT

CONDITION/APPLICABILITY	INDICATION	CLASSIFICATION
12. Loss of communications capability ALL MODES	• Station PBX phone system - FAILED AND • Station Gai-tronics system - FAILED AND • Station UHF radio system - FAILED	NOTIFICATION OF UNUSUAL EVENT

CONDITION/APPLICABILITY	INDICATION	CLASSIFICATION
1. Loss of 2 of 3 fission product barriers with potential loss of 3rd barrier ALL MODES	Any two of a), b) or c) exist and the third is imminent: a) Fuel clad integrity failure as indicated by any of the following: • RCS specific activity greater than or equal to 300.0 µCi/gram dose equivalent I-131 OR 5 or more core exit thermocouples greater than 1200 °F OR Containment High Range Radiation Monitor RM-RMS-165, -166 or RM-RMS-265, -266 GREATER THAN 1.88×10^2 R/hr b) Loss of RCS integrity as indicated by any of the following: • RCS pressure greater than 2735 psig OR Loss of Reactor Coolant in progress c) Loss of containment integrity as indicated by any of the following: • Containment pressure greater than 60 psia and not decreasing OR Release path to environment -EXISTS	GENERAL EMERGENCY

CONDITION/APPLICABILITY	INDICATION	CLASSIFICATION
2. Fuel failure with steam generator tube rupture ALL MODES	Any two of a), b) or c) exist and the third is imminent: a) Fuel clad integrity failure as indicated by any of the following: • RCS specific activity greater than 300 µCi/gram dose equivalent I-131 OR 5 or more core exit thermocouples GREATER THAN 1200 °F OR High Range Letdown radiation monitor 1-CH-RI-128 or 2-CH-RI-228 GREATER THAN 5.9×10^4 mR/hr b) Steam Generator tube rupture as indicated by both of the following: • SI coincidence - SATISFIED AND • Steam Generator tube rupture -IN PROGRESS c) Loss of secondary integrity associated with ruptured steam generator pathway as indicated by any of the following: • Steam Generator PORV - OPEN OR Main Steam Code Safety Valve - OPEN OR Loss of secondary coolant outside containment - IN PROGRESS	GENERAL EMERGENCY

CONDITION/APPLICABILITY	INDICATION	CLASSIFICATION
3. RCS leak rate exceeds makeup capacity MODES 1, 2, 3, & 4	• Primary system leak (LOCA) - IN PROGRESS AND • Safety Injection - REQUIRED AND • RCS subcooling based on Core Exit Thermocouples - LESS THAN 30° F OR RCS inventory cannot be maintained based on pressurizer level or RVLIS indication	SITE AREA EMERGENCY
4. Gross primary to secondary leakage with loss of offsite power MODES 1, 2, 3, & 4	• Steam Generator Tube Rupture - IN PROGRESS AND • Safety Injection - REQUIRED AND • Vent Vent A MGPI Monitor RM-VG-179 GREATER THAN 1.25×10^8 µCi/sec OR Steam Generator Blowdown monitor on affected pathway RM-SS-122, -222 RM-SS-123, -223 RM-SS-124, -224 GREATER THAN 1×10^6 cpm AND • A subsequent loss of offsite power indicated by zero volts on voltmeters for 4160V buses D, E, & F	SITE AREA EMERGENCY

CONDITION/APPLICABILITY	INDICATION	CLASSIFICATION
5. RCS leak rate limit - EXCEEDED MODES 1, 2, 3, & 4	• Pressurizer level cannot be maintained greater than 20% with one (1) Charging/SI pump in operation AND • RCS inventory balance indicates leakage - greater than 50 gpm	ALERT
6. Gross primary to secondary leakage MODES 1, 2, 3, & 4	Steam Generator Tube Rupture - IN PROGRESS AND Safety Injection - REQUIRED	ALERT
7. Excessive primary to secondary leakage with loss of offsite power MODES 1, 2, 3, & 4	• Intentional reduction in power, load or temperature IAW T.S. 3.4.13 primary-to-secondary leakage LCO Action Statement AND • Vent Vent A MGPI Monitor RM-VG-179 GREATER THAN 1.73×10^6 µCi/sec OR Steam Generator Blowdown monitor on affected pathway RM-SS-122, -222 RM-SS-123, -223 RM-SS-124, -224 GREATER THAN 1×10^5 cpm AND • A subsequent loss of offsite power indicated by zero volts on voltmeters for 4160V buses D, E, & F	ALERT

CONDITION/APPLICABILITY	INDICATION	CLASSIFICATION
8. RCS operational leakage requiring plant shutdown IAW T.S. 3.4.13 MODES 1, 2, 3, & 4	Intentional reduction in power load or temperature IAW T.S. 3.4.13 leakage limit action statement - HAS COMMENCED	NOTIFICATION OF UNUSUAL EVENT

CONDITION/APPLICABILITY	INDICATION	CLASSIFICATION
1. Probable large radioactivity release initiated by LOCA with ECCS failure leading to core degradation ALL MODES	• Loss of reactor coolant in progress AND • RCS specific activity - greater than 300 µCi/gram dose equivalent I-131 OR Containment High Range Radiation Monitor RM-RMS-165, -166 or RM-RMS-265, -266 GREATER THAN 1.88×10^2 R/hr AND • High or low head ECCS flow not being delivered to the core (if expected by plant conditions)	GENERAL EMERGENCY

CAUTION: EAL A.1 is duplicated below for cross-reference/comparison to EAL C.2:

A.1.	Loss of function needed for unit HSD condition MODES 1, 2, 3 & 4	• Total loss of the Charging/SI System OR Total loss of the Main Feedwater and Auxiliary Feedwater systems	SITE AREA EMERGENCY

2.	Probable large radioactivity release initiated by loss of heat sink leading to core degradation MODES 1, 2, 3 & 4	Loss of Main Feedwater System, Condensate System and Auxiliary Feedwater System	GENERAL EMERGENCY

CONDITION/APPLICABILITY	INDICATION	CLASSIFICATION
3. Probable large radioactivity release initiated by failure of protection system to bring Rx subcritical and causing core degradation ALL MODES	• Rx nuclear power after a trip - greater than 5% AND • RCS pressure greater than or equal to 2485 psig OR Containment pressure and temperature rapidly increasing	GENERAL EMERGENCY
4. Probable large radioactivity release initiated by loss of AC power and all feedwater ALL MODES	• Loss of all onsite and offsite AC power AND • Turbine Driven Auxiliary Feedwater Pump not operable AND • Restoration of either of the above not likely within 2 hours	GENERAL EMERGENCY

CONDITION/APPLICABILITY	INDICATION	CLASSIFICATION
5. Probable large radioactivity release initiated by LOCA with loss of ECCS and containment cooling ALL MODES	• Loss of reactor coolant in progress AND • High or low head ECCS flow not being delivered to the core (if expected by plant conditions) AND • Containment RS sump temperature greater than 190°F and NOT decreasing OR All Quench Spray and Recirculation Spray systems - NOT OPERABLE	GENERAL EMERGENCY

CONDITION/APPLICABILITY	INDICATION	CLASSIFICATION
6. Core damage with possible loss of coolable geometry MODES 1, 2, 3, & 4	a) Fuel clad failure as indicated by any of the following: • RCS Specific activity greater than 60 µCi/gram dose equivalent I-131 OR High Range Letdown radiation monitor 1-CH-RI-128 or 2-CH-RI-228 GREATER THAN 1.2×10^4 mR/hr AND b) Loss of cooling as indicated by any of the following: • 5 confirmed core exit thermocouples greater than 1200 °F OR Core delta T - zero OR Core delta T - rapidly diverging	SITE AREA EMERGENCY

CONDITION/APPLICABILITY	INDICATION	CLASSIFICATION
7. Major fuel damage accident with radioactivity release to containment or fuel buildings ALL MODES	• Water level in Rx vessel during refueling below the top of core OR Water level in spent fuel pool below top of spent fuel AND • Verified damage to irradiated fuel resulting in readings on Vent Vent "B" MGPI monitor RM-VG-180 GREATER THAN 2.69×10^8 µCi/sec	SITE AREA EMERGENCY
8. Severe Fuel Clad Damage MODES 1, 2, 3, & 4	• High Range Letdown radiation monitor 1-CH-RI-128 or 2-CH-RI-228 Increases to GREATER THAN Hi Hi Alarm setpoint (representing 1% fuel failure) within 30 minutes and remains for at least 15 minutes OR • RCS specific activity - greater than 300 µCi/gram dose equivalent I-131	ALERT

CONDITION/APPLICABILITY	INDICATION	CLASSIFICATION
9. Fuel damage accident with release of radioactivity to containment or fuel buildings ALL MODES	• Verified accident involving damage to irradiated fuel AND • Health Physics confirms fission product release from fuel OR Vent Vent "B" MGPI monitor RM-VG-180 GREATER THAN 1.99×10^6 µCi/sec	ALERT
10. Potential for fuel damage to occur during refueling MODE 6	Continuing uncontrolled decrease of water level in Reactor Refueling Cavity or Spent Fuel Pool	ALERT

CONDITION/APPLICABILITY	INDICATION	CLASSIFICATION
11. Fuel clad damage indication MODES 1, 2, 3, & 4	• Intentional reduction in power, load or temperature IAW reactor coolant activity T.S. Action Statement - HAS COMMENCED OR High Range Letdown radiation monitor 1-CH-RI-128 or 2-CH-RI-228 Increases to GREATER THAN Hi Alarm setpoint (representing 0.1% fuel failure) within 30 minutes and remains for for at least 15 minutes	NOTIFICATION OF UNUSUAL EVENT
12. Independent Spent Fuel Storage Installation (ISFSI) event ALL MODES	• Verified Sealed Surface Storage Cask (SSSC) seal leakage OR Sealed Surface Storage Cask (SSSC) dropped or mishandled	NOTIFICATION OF UNUSUAL EVENT

CONDITION/APPLICABILITY	INDICATION	CLASSIFICATION
1. Extremely high containment radiation, pressure and temperature MODES 1, 2, 3, & 4	• Containment High Range radiation monitor RM-RMS-165, -166 or RM-RMS-265, -266 GREATER THAN 3.76×10^2 R/hr AND • Containment pressure greater than 45 psia and not decreasing OR Containment temperature greater than 280°F	GENERAL EMERGENCY
2. High-high containment radiation, pressure, and temperature MODES 1, 2, 3, & 4	• Containment High Range radiation monitor RM-RMS-165, -166 or RM-RMS-265, -266 GREATER THAN 1.88×10^2 R/hr AND • Containment pressure - greater than 27.75 psia and not decreasing OR Containment temperature - greater than 200 °F	SITE AREA EMERGENCY

CONDITION/APPLICABILITY	INDICATION	CLASSIFICATION
3. High Containment radiation, pressure and temperature MODES 1, 2, 3, & 4	• Containment High Range radiation monitor RM-RMS-165, -166 or RM-RMS-265, -266 GREATER THAN 81.5 R/hr AND • Containment pressure - greater than 17 psia OR Containment temperature - greater than 150°F	ALERT

CONDITION/APPLICABILITY	INDICATION	CLASSIFICATION
1. Release imminent or in progress and site boundary doses projected to exceed 1.0 Rem TEDE or 5.0 Rem Thyroid CDE ALL MODES	• HP assessment indicates actual or projected doses at or beyond site boundary greater than 1.0 Rem TEDE or 5.0 Rem Thyroid CDE	GENERAL EMERGENCY
2. Release imminent or in progress and site boundary doses projected to exceed 0.1 Rem TEDE or 0.5 Rem Thyroid CDE ALL MODES	• HP assessment indicates actual or projected dose at or beyond Site Boundary exceeds 0.1 Rem TEDE or 0.5 Rem Thyroid CDE	SITE AREA EMERGENCY

CONDITION/APPLICABILITY	INDICATION	CLASSIFICATION
3. Effluent release greater than 10 times ODCM allowable limit ALL MODES	a) Any of the following monitors indicate valid readings above the specified values for greater than 15 minutes • Clarifier Effluent RM-LW-111 GREATER THAN 4.8×10^5 cpm • Discharge Canal RM-SW-130 or -230 GREATER THAN 5×10^4 cpm • Vent Vent A MGPI RM-VG-179 GREATER THAN 1.73×10^6 µCi/sec • Vent Vent B MGPI RM-VG-180 GREATER THAN 1.99×10^6 µCi/sec • Process Vent MGPI RM-GW-178 GREATER THAN 1.35×10^7 µCi/sec OR b) HP assessment (sample results or dose projections) indicate greater than 10 times ODCM allowable limit	ALERT

CONDITION/APPLICABILITY	INDICATION	CLASSIFICATION
4. High radiation or airborne contamination levels indicate a severe degradation in control of radioactive material ALL MODES	Valid readings on any of the following monitors have increased by a factor of 1000 and remain for at least 15 minutes: • Ventilation Vent Multi-sample gaseous or particulate monitor RM-VG-106 or -105 • Control Room Area RMS-157 • Aux. Bldg. Control Area RMS-154 • Decon. Bldg. Area RMS-151 • Fuel Pool Bridge Area RMS-153 • New fuel storage Area RMS-152 • Laboratory Area RMS-158 • Sample Room Area RMS-156	ALERT

CONDITION/APPLICABILITY	INDICATION	CLASSIFICATION
5. Effluent release greater than ODCM allowable limit ALL MODES	a) Any of the following monitors indicate valid readings above the specified value for more than 1 hour: • Clarifier Effluent RM-LW-111 GREATER THAN 4.8×10^4 cpm • Discharge Canal RM-SW-130 or -230 GREATER THAN 5×10^3 cpm • Vent Vent A MGPI RM-VG-179 GREATER THAN 1.73×10^5 µCi/sec • Vent Vent B MGPI RM-VG-180 GREATER THAN 1.99×10^5 µCi/sec • Process Vent MGPI RM-GW-178 GREATER THAN 1.35×10^6 µCi/sec OR b) HP assessment (sample results or dose projections) indicates greater than ODCM allowable limit	NOTIFICATION OF UNUSUAL EVENT

CONDITION/APPLICABILITY	INDICATION	CLASSIFICATION
1. Major secondary line break with significant primary to secondary leakage and fuel damage indicated MODES 1, 2, 3, & 4	Conditions a) and b) exist with c): a) Uncontrolled loss of secondary coolant - IN PROGRESS AND b) RCS specific activity exceeds limits of T.S. Figure 3.4.16-1 OR High Range Letdown radiation monitor 1-CH-RI-128 or 2-CH-RI-228 GREATER THAN Hi Alarm setpoint AND c) Vent Vent A MGPI Monitor RM-VG-179 GREATER THAN 6.21×10^7 µCi/sec OR Affected pathway Steam Generator Blowdown monitor RM-SS-122, -123, -124, -222, -223, -224 GREATER THAN 1×10^6 cpm OR Affected pathway Main Steam Line High Range monitor RM-MS-170, -171, -172, -270, -271, -272 GREATER THAN 12.2 mR/hr	SITE AREA EMERGENCY

CONDITION/APPLICABILITY	INDICATION	CLASSIFICATION
2. Major secondary line break with significant primary to secondary leakage MODES 1, 2, 3, & 4	• Uncontrolled loss of secondary coolant - IN PROGRESS AND • Vent Vent A MGPI Monitor RM-VG-179 GREATER THAN 1.76×10^6 µCi/sec OR Steam Generator Blowdown monitor on affected pathway RM-SS-122, -123, -124 RM-SS-222, -223, -224 GREATER THAN 1×10^5 cpm OR Main Steam Line High Range monitor on affected pathway RM-MS-170, -171, -172 RM-MS-270, -271, -272 GREATER THAN 0.14 mR/hr	ALERT
3. Major secondary line break MODES 1, 2, 3, & 4	Uncontrolled loss of secondary coolant - IN PROGRESS	NOTIFICATION OF UNUSUAL EVENT

CONDITION/APPLICABILITY	INDICATION	CLASSIFICATION
1. Loss of offsite and onsite AC power for more than 15 minutes ALL MODES	The following conditions exist for greater than 15 minutes: • Ammeters for 4160V Reserve Station Service Buses D, E, & F all indicate - zero (0) amps AND • Ammeters for 4160V Station Service Buses A, B, & C all indicate - zero (0) amps AND • Ammeters for 4160V Emergency Buses H & J both indicate - zero (0) amps	SITE AREA EMERGENCY
2. Loss of all onsite DC power for greater than 15 minutes ALL MODES	The following conditions exist for greater than 15 minutes: • All station battery voltmeters indicate zero (0) volts AND • No light indication available to Reserve Station Service breakers 15D1, 15E1 and 15F1	SITE AREA EMERGENCY

CONDITION/APPLICABILITY	INDICATION	CLASSIFICATION
CAUTION: EAL A.1 is duplicated below for cross-reference/comparison to EAL H.3:		
A.1. Loss of function needed for unit HSD condition MODES 1, 2, 3 & 4	• Total loss of the Charging/SI System OR Total loss of the Main Feedwater and Auxiliary Feedwater Systems	SITE AREA EMERGENCY
3. Loss of all offsite and onsite AC power ALL MODES	• Ammeters for 4160V Reserve Station Service Buses D, E, & F all indicate - zero (0) amps AND • Ammeters for 4160V Station Service Buses A, B, & C all indicate - zero (0) amps AND • Ammeters for 4160V Emergency Buses H and J both indicate - zero (0) amps	ALERT
4. Loss of all onsite DC power ALL MODES	• All station battery voltmeters indicate - zero (0) volts AND • No light indication available to Reserve Station Service Breakers 15D1, 15E1 and 15F1	ALERT

CONDITION/APPLICABILITY	INDICATION	CLASSIFICATION
5. Loss of offsite power or onsite AC power capability ALL MODES	• Unit main generator and both emergency diesel generators out of service OR Loss of all 34.5 KV reserve station service buses	NOTIFICATION OF UNUSUAL EVENT

CONDITION/APPLICABILITY	INDICATION	CLASSIFICATION
1. Fire resulting in degradation of safety systems MODES 1, 2, 3, & 4	• Fire which causes major degradation of a safety system function required for protection of the public AND • Affected systems are caused to be NOT operable as defined by Tech. Specs.	SITE AREA EMERGENCY
2. Fire potentially affecting station safety systems MODES 1, 2, 3, & 4	Fire which has potential for causing a safety system not to be operable as defined by Tech. Specs.	ALERT
3. Fire lasting greater than 10 minutes in Protected Area or Service Water Pump/Valve House ALL MODES	Fire within the Protected Area or Service Water Pump/Valve House which is not under control within 10 minutes after Fire Brigade - DISPATCHED	NOTIFICATION OF UNUSUAL EVENT

CONDITION/APPLICABILITY	INDICATION	CLASSIFICATION
1. Loss of physical Station control ALL MODES	• Shift Manager/Station Emergency Manager has been informed that the security force has been neutralized by attack, resulting in loss of physical control of station OR Shift Manager/Station Emergency Manager has been informed of intrusion into one or more Vital Areas which are occupied or controlled by an aggressor	GENERAL EMERGENCY
2. Imminent loss of physical Station control ALL MODES	Security Shift Supervisor has notified the Operations Shift Manager/Station Emergency Manager of imminent intrusion into a Vital Area	SITE AREA EMERGENCY
3. Ongoing Security compromise ALL MODES	Security Shift Supervisor has notified the Operations Shift Manager/Station Emergency Manager of a confirmed unneutralized intrusion into the Protected Area or ISFSI	ALERT

CONDITION/APPLICABILITY	INDICATION	CLASSIFICATION
4. Security threat, unauthorized attempted entry, or attempted sabotage ALL MODES	Any of the following when determined to have potential for degrading the level of safety of the plant or ISFSI • Receipt of a credible site-specific threat from Security, NRC or FBI • Confirmed hostage situation • Civil disturbance • Discovery of a bomb device (other-than on or near a safety-related system which represents an on-going security compromise) • Confirmed attempted intrusion (Protected Area or ISFSI) • Attempted sabotage	NOTIFICATION OF UNUSUAL EVENT

CONDITION/APPLICABILITY	INDICATION	CLASSIFICATION
1. Aircraft damage to vital plant systems MODES 1, 2, 3, & 4	Aircraft crash which affects vital structures by impact or fire	SITE AREA EMERGENCY
2. Severe explosive damage MODES 1, 2, 3, & 4	Explosion which results in severe degradation of any of the following systems required for safe shutdown: • CVCS System OR ECCS System OR Main/Auxiliary Feedwater System	SITE AREA EMERGENCY
3. Entry of toxic or flammable gases into plant vital areas other than the Control Room MODES 1, 2, 3, & 4	• Uncontrolled release of toxic or flammable agents greater than life threatening or explosive limits in Vital Areas AND • Evacuation of Vital Area other than Control Room - REQUIRED OR Significant degradation of plant safety systems resulting in loss of a safety system function required for protection of the public	SITE AREA EMERGENCY

CONDITION/APPLICABILITY	INDICATION	CLASSIFICATION
4. Severe missile damage to safety systems MODES 1, 2, 3, & 4	Missile impact causing severe degradation of safety systems required for unit shutdown	SITE AREA EMERGENCY
5. Aircraft crash on the facility ALL MODES	Aircraft crash within the Protected Area or Switchyard	ALERT
6. Explosion damage to facility ALL MODES	Unplanned explosion resulting in damage to plant structure or equipment that affects plant operations	ALERT
7. Entry of toxic or flammable gases or liquids into plant facility ALL MODES	Notification of uncontrolled release of toxic or flammable agent which causes: • Evacuation of personnel from plant areas AND • Safety related equipment is rendered inoperable	ALERT
8. Turbine failure or missile impact MODES 1 & 2	Failure of turbine/generator rotating equipment resulting in casing penetration	ALERT

CONDITION/APPLICABILITY	INDICATION	CLASSIFICATION
9. Missile damage to safety related equipment or structures MODES 1, 2, 3, & 4	Notification of missile impact causing damage to safety related equipment or structures	ALERT
10. Aircraft crash or unusual aircraft activity ALL MODES	• Confirmed notification of aircraft crash within the site boundary OR Unusual aircraft activity in the vicinity of the site as determined by the Operations Shift Manager/ Station Emergency Manager or the Security Shift Supervisor	NOTIFICATION OF UNUSUAL EVENT
11. Train derailment within Protected Area ALL MODES	Confirmed report of train derailment within Protected Area	NOTIFICATION OF UNUSUAL EVENT
12. Explosion within Protected Area ALL MODES	Confirmed report of unplanned explosion within Protected Area	NOTIFICATION OF UNUSUAL EVENT
13. Onsite or nearsite release of toxic or flammable liquids or gases - ALL MODES	Notification of unplanned release of toxic or flammable agents which may affect safety of station personnel or equipment	NOTIFICATION OF UNUSUAL EVENT

CONDITION/APPLICABILITY	INDICATION	CLASSIFICATION
14. Turbine rotating component failure with no casing penetration MODES 1 & 2	Failure of turbine/generator rotating equipment resulting in immediate unit shutdown	NOTIFICATION OF UNUSUAL EVENT

CONDITION/APPLICABILITY	INDICATION	CLASSIFICATION
1. Earthquake greater than or equal to DBE levels MODES 1, 2, 3, & 4	• Confirmed earthquake which activates the Event Indicator on the Strong Motion Accelerograph AND • Alarms on the Peak Shock Annunciator indicate a horizontal motion of greater than or equal to 0.12 g or a vertical motion of greater than or equal to 0.08g	SITE AREA EMERGENCY
2. Sustained winds in excess of design levels experienced or projected MODES 1, 2, 3, & 4	Sustained winds 150 mph OR GREATER experienced or projected	SITE AREA EMERGENCY
3. Flood or low water level above design levels MODES 1, 2, 3, & 4	Either condition a) or b) exists a) Flood in the Lake Anna Reservoir with indicated level - greater than 264 feet MSL OR b) Low water level in the Lake Anna Reservoir with indicated level - less than 244 feet MSL AND Inability to satisfy action requirements of TR 3.7.4 for North Anna Reservoir	SITE AREA EMERGENCY

CONDITION/APPLICABILITY	INDICATION	CLASSIFICATION
4. Earthquake greater than or equal to OBE levels ALL MODES	• Confirmed earthquake which activates Event Indicator on the Strong Motion Accelerograph AND • Alarms on the Peak Shock Annunciator indicate a horizontal motion of greater than or equal to 0.06 g or a vertical motion of greater than or equal to 0.04g	ALERT
5. Tornado striking facility ALL MODES	Tornado visually detected striking structures within the Protected Area or Switchyard	ALERT
6. Hurricane winds near design basis level experienced or projected ALL MODES	Hurricane winds 120 mph OR GREATER experienced or projected	ALERT
7. Flood or low water level near design levels ALL MODES	• Flood in the Lake Anna Reservoir with indicated level - greater than 263 feet MSL OR Low water level in the Lake Anna Reservoir with indicated level - less than 244 feet MSL	ALERT

CONDITION/APPLICABILITY	INDICATION	CLASSIFICATION
8. Earthquake detected ALL MODES	Confirmed earthquake which activates the Event Indicator on the Strong Motion Accelerograph	NOTIFICATION OF UNUSUAL EVENT
9. Tornado within Protected Area or Switchyard ALL MODES	Tornado visually detected within Protected Area or Switchyard	NOTIFICATION OF UNUSUAL EVENT
10. Hurricane force winds projected onsite within 12 hours ALL MODES	• Confirmation by Weather Center that hurricane force winds (greater than 73 mph) projected onsite within 12 hours	NOTIFICATION OF UNUSUAL EVENT
11. 50 year flood or low water level ALL MODES	• Flood in the Lake Anna Reservoir with indicated level - greater than 254 feet MSL OR Low water level in the Lake Anna Reservoir with indicated level less than 246 feet MSL	NOTIFICATION OF UNUSUAL EVENT

CONDITION/APPLICABILITY	INDICATION	CLASSIFICATION
1. Any major internal or external events which singly or in combination cause massive damage to station facilities or may warrant evacuation of the public ALL MODES	Shift Manager/Station Emergency Manager judgement	GENERAL EMERGENCY
2. Station conditions which may warrant notification of the public near the site ALL MODES	Shift Manager/Station Emergency Manager judgement	SITE AREA EMERGENCY
3. Station conditions which have the potential to degrade or are actually degrading the level of safety of the station ALL MODES	Shift Manager/Station Emergency Manager judgement	ALERT

CONDITION/APPLICABILITY	INDICATION	CLASSIFICATION
4. Station conditions which warrant increased awareness of state and/or local authorities ALL MODES	Shift Manager/Station Emergency Manager judgement that any of the following exist: • Unit shutdown is other than a controlled shutdown OR Unit is in an uncontrolled condition during operation OR A condition exists which has the potential for escalation and therefore warrants notification	NOTIFICATION OF UNUSUAL EVENT

NUMBER	ATTACHMENT TITLE	REVISION
EPIP-1.01	TURNOVER CHECKLIST	38
ATTACHMENT 2		PAGE 1 of 1

Conduct a turnover between the onshift and relief SEM in accordance with the following checklist. Use placekeeping aid at left of item, "_____", to track completion.

___ 1. Determine the status of primary responder notification.

___ 2. Determine the status of "Report of Emergency to State and Local Governments," EPIP-2.01, Attachment 2. Get completed copies if available.

___ 3. Determine status of the "Report of Radiological Conditions to the State," EPIP-2.01, Attachment 3. Get completed copy if available.

___ 4. Determine status of Emergency Notification System (ENS) communications and completion status of NRC Event Notification Worksheet (EPIP-2.02 Attachment 1).

___ 5. Review classification and initial PAR status.

___ 6. Review present plant conditions and status. Get copy of Critical Safety Functions form.

___ 7. Review status of station firewatches and re-establish if conditions allow.

___ 8. Determine readiness of TSC for activation.

___ 9. After all information is obtained, transfer location to TSC. (Consider direct transfer of State & local notifications to LEOF/CEOF.)

___ 10. Call the Control Room and assess any changes that may have occurred during transition to the TSC.

___ 11. When sufficient personnel are available, the relief SEM is to assume the following responsibilities from the onshift Station Emergency Manager:
   a. Reclassification.
   b. Protective Action Recommendations until LEOF activated.
   c. Notifications (i.e., state, local, & NRC). Upon LEOF activation, transfer notification responsibilities except for the NRC ENS.
   d. Site evacuation authorization.
   e. Emergency exposure authorization.
   f. Command/control of onsite response.

___ 12. Formally relieve the Interim SEM and assume control in the TSC. Announce name and facility activation status to facility.

NUMBER	ATTACHMENT TITLE	REVISION
EPIP-1.01	CONSIDERATIONS FOR OPERATIONS RESPONSE UNDER ABNORMAL CONDITIONS	38
ATTACHMENT 3		PAGE 1 of 1

This attachment provides procedural guidance for controlling selected emergency response actions when their implementation would have adverse results.

Station Emergency Manager (SEM) approval is required before any required action is postponed, suspended or modified. The guidance below is not all-inclusive.

UNANTICIPATED HAZARD EXISTS (e.g., security event, tornado or toxic release):

IF implementation of emergency response actions could compromise Security Plan response strategies, THEN consider postponing or suspending emergency response actions until threat has been resolved, e.g., on-site announcement directing assembly and emergency response facility activation, pager activation and call-out per EPIP-3.05, AUGMENTATION OF EMERGENCY RESPONSE ORGANIZATION, dispatch of Security Team members to the LEOF per EPIP-3.04, ACTIVATION OF LOCAL EMERGENCY OPERATIONS FACILITY, and staging of road blocks per EPIP-5.04, ACCESS CONTROL.

IF assembling on-site personnel for accountability or activation of emergency response facilities could endanger plant personnel, THEN consider postponing emergency assembly until hazardous conditions are resolved. (Consider having Corporate Security notify corporate emergency response organization only using CPIP-3.4, INNSBROOK SECURITY SUPPORT, and notifying personnel in unaffected areas on-site selectively.)

IF notifying augmentation could create a safety hazard for personnel coming to the station, THEN consider postponing augmentation notification. (Consider having Corporate Security notify corporate emergency response organization only using CPIP-3.4, INNSBROOK SECURITY SUPPORT, or defering notifications until hazardous conditions are resolved.)

ANTICIPATED SITUATION (e.g., forecasted severe weather or grid disturbance):

IF all or part of the ERO has been staged in anticipation of a predicted event, THEN notify Security to omit performance of augmentation notification (as described in EPIP-3.05, AUGMENTATION OF EMERGENCY RESPONSE ORGANIZATION).

IF adequate controls have been established to continually account for personnel staged in anticipation of a predicted event, THEN notify Security to omit performance of initial accountability (as described in EPIP-5.03, PERSONNEL ACCOUNTABILITY).

IF a decision has been made to staff the Central EOF in lieu of the LEOF, THEN notify Security that performance of EPIP-3.04, ACTIVATION OF LOCAL EMERGENCY OPERATIONS FACILITY, is not required.

IF environmental conditions are hazardous, THEN consult with Security Team Leader about suspending procedural requirements for staging road blocks (IAW EPIP-5.04, ACCESS CONTROL).

VIRGINIA POWER
NORTH ANNA POWER STATION
EMERGENCY PLAN IMPLEMENTING PROCEDURE

NUMBER	PROCEDURE TITLE	REVISION
EPIP-4.01	RADIOLOGICAL ASSESSMENT DIRECTOR CONTROLLING PROCEDURE (With 2 Attachments)	20 PAGE 1 of 28

PURPOSE

To initially assess emergency conditions, provide recommendations for protective measures, establish an emergency organization and direct Health Physics response to an emergency.

LEVEL 2 DISTRIBUTION
This Document Should Be Verified
And Annotated To A Controlled Source
As Required to Perform Work

ENTRY CONDITIONS

Activation by EPIP-1.01, EMERGENCY MANAGER CONTROLLING PROCEDURE.

Approvals on File

Effective Date 7/1/2003

STEP	ACTION/EXPECTED RESPONSE	RESPONSE NOT OBTAINED

_____ 1 INITIATE PROCEDURE:

a) By: _____

Date: _____

Time: _____

b) Assume position of Radiological Assessment Director (RAD)

c) Initiate a chronological log to record sequence of events, key decisions, action taken, and other applicable information related to the event

_____ 2 GO TO THE CONTROL ROOM

IF conditions require your presence in another location, THEN inform SEM

AND

Report to the Control Room immediately upon completion of task.

NOTE: During the initial stages of the emergency the Operations Shift Manager may assume the position of Station Emergency Manager.

_____ 3 ASK SEM FOR BRIEFING ON THE FOLLOWING PARAMETERS:

- Plant status
- Emergency Action Levels (EALs) exceeded
- Emergency Classification

STEP	ACTION/EXPECTED RESPONSE	RESPONSE NOT OBTAINED
_____ 4	CHECK IF EMERGENCY FACILITIES ARE BEING ACTIVATED	GO TO Step 6.
_____ 5	MOVE TO TSC	
	NOTE: A minimum of 2 (two) Offsite Monitoring Teams must be dispatched (i.e., sent into the field) upon a Site Area Emergency or higher emergency class.	
_____ 6	CHECK HP SUPPORT - REQUIRED	IF HP support NOT immediately required, THEN do the following: • WHEN HP support required, THEN GO TO Step 7. • WHEN emergency is terminated, THEN GO TO Step 39.
_____ 7	CHECK IF EVENT INVOLVES ACTUAL OR POTENTIAL OFFSITE RELEASE	GO TO Step 25.
_____ 8	INITIATE SAMPLING OF EFFLUENT PATHWAY	IF unable to get effluent sample, THEN initiate source term sampling.
_____ 9	DIRECT INITIATION OF EPIP-4.03, DOSE ASSESSMENT TEAM CONTROLLING PROCEDURE	

STEP	ACTION/EXPECTED RESPONSE	RESPONSE NOT OBTAINED
_____ 10	DIRECT INITIATION OF EPIP-4.30, USE OF MIDAS CLASS A MODEL	IF MIDAS NOT operable, THEN initiate back-up assessment using desk-top calculations: • EPIP-4.08, INITIAL OFFSITE RELEASE ASSESSMENT. • EPIP-4.09, SOURCE TERM ASSESSMENT. • EPIP-4.10, DETERMINATION OF X/Q.
_____ 11	DIRECT RPS TO INITIATE EPIP-4.02, RADIATION PROTECTION SUPERVISOR CONTROLLING PROCEDURE	
_____ 12	DETERMINE EVENT CLASSIFICATION:	

ASSESSMENT RESULTS	CLASSIFICATION
Normal range monitors ONSCALE and indicate < 100% TS	N/A: Below classification limits
Normal range monitors ONSCALE and indicate ≥ 100% TS (but < 1000%)	Notification of Unusual Event
% TS calculations indicate ≥ 1000%	Alert
Site Boundary dose ≥ 100 mrem TEDE 500 mrem Thyroid CDE	Site Area Emergency
Site Boundary dose ≥ 1 Rem TEDE or 5 Rem Thyroid CDE	General Emergency

_____ 13	GIVE ASSESSMENT BASED CLASSIFICATION TO SEM	

STEP	ACTION/EXPECTED RESPONSE	RESPONSE NOT OBTAINED
_____ 14	CHECK NOTIFICATION OF UNUSUAL EVENT IN EFFECT OR EVENT IS BELOW CLASSIFICATION LIMITS: a) Report percent Tech. Spec. and Site Boundary dose rate to Station Emergency Manager b) Get backup sample of the effluent release path c) Have sample analyzed using Health Physics Procedures d) GO TO Step 20 for follow up assessment	GO TO Step 15. b) IF unavailable, THEN GO TO Step 20.
_____ 15	INITIATE RESPONSE ACTIONS FOR CONDITION IV LIMITING FAULT ACCIDENT: • Fuel Handling Accident - GO TO Step 16 • Steam Generator Tube Rupture - GO TO Step 17 • Main Steam Line Rupture - GO TO Step 18 • LOCA - GO TO Step 19	IF event NOT Limiting Fault, THEN GO TO Step 20.

STEP	ACTION/EXPECTED RESPONSE	RESPONSE NOT OBTAINED

NOTE: Analysis of accidents involving decayed spent fuel should include consideration of onsite skin dose due to Kr-85.

_____ 16 INITIATE RESPONSE ACTIONS FOR FUEL HANDLING ACCIDENT:

a) Recommend evacuation of the Fuel Building and affected containment

b) Restrict access until radiological assessment can be made

c) Have EPIP-4.06, PERSONNEL MONITORING AND DECONTAMINATION, initiated to monitor individuals evacuated from accident area

d) Report dose assessment (MIDAS or desk-top) results to SEM

e) GO TO Step 21

STEP	ACTION/EXPECTED RESPONSE	RESPONSE NOT OBTAINED

_____ 17 INITIATE RESPONSE ACTIONS FOR STEAM GENERATOR TUBE RUPTURE:

a) Get release parameters from SEM:

1) Note length of time between initiation of release and when Air Ejector diverted to containment:_____(min.) (if Air Ejector diverted)

2) Number of Steam Generator Relief or Safety Valves which have lifted:_____

3) Length of time Relief or Safety Valves remained open: _____(min.)

4) Number of relief or Safety Valves which may potentially lift: _____

5) Status of main steam supply to the Steam Driven Auxiliary Feedwater Pump:

Steam isolation from "A" S/G at _____(time)
"B" S/G at _____
"C" S/G at _____

6) Current Steam Generator Blowdown pathway:_____

7) Length of time until blowdown isolated:____(min.)

b) Check Air Ejector - DIVERTED TO CONTAINMENT

b) IF Air Ejector NOT diverted, THEN GO TO Step 17.d.

c) Request immediate evacuation of containment building

(STEP 17 CONTINUED ON NEXT PAGE)

STEP	ACTION/EXPECTED RESPONSE	RESPONSE NOT OBTAINED
17	INITIATE RESPONSE ACTIONS FOR STEAM GENERATOR TUBE RUPTURE: (Continued)	
	d) Check Steam Driven Auxiliary Feedwater Pump (SDAFWP) Turbine - ISOLATED	d) IF SDAFWP Turbine NOT ISOLATED, THEN do the following: 1) Ask SEM to isolate main steam supply from affected generator to Steam Driven Auxiliary Feedwater Pump. 2) GO TO Step 17.f.
	e) Disregard SDAFWPT as a release pathway	
	f) Ask SEM for placement of individual to report the following data: 1) Initial monitor readings 2) Increase or decrease in Main Steam and SDAFWP exhaust radiation monitors 3) Meteorological panel indications	
	g) Report dose assessment (MIDAS or desk-top) results to SEM	

(STEP 17 CONTINUED ON NEXT PAGE)

STEP	ACTION/EXPECTED RESPONSE	RESPONSE NOT OBTAINED

17 INITIATE RESPONSE ACTIONS FOR STEAM GENERATOR TUBE RUPTURE: (Continued)

h) Restrict access in the following areas until survey(s) confirm no radiological hazards:

- Steam Generator Blowdown Cooler area
- Steam Generator Blowdown Lines and Vent area
- Steam Generator Relief Valve area
- Steam Driven Auxiliary Feedwater Pump Turbine exhaust area
- Powdex Area - Turbine Building, 303' level
- Main Steam Valve House

i) Consider sampling of Steam Generator Blowdown and Main Steam of affected unit

j) Determine potential for liquid release pathway through the Main Steam Safety Valve

k) GO TO Step 21

STEP	ACTION/EXPECTED RESPONSE	RESPONSE NOT OBTAINED
_____ 18	INITIATE RESPONSE ACTIONS FOR MAIN STEAM LINE RUPTURE:	
	a) Ask SEM for release parameters: 1) Location of steam break 2) Status of actual or potential Main Steam Safety Valve lift 3) Number of valves lifted: _____ 4) Length of time valves remained open: _____(min.) 5) Status of Steam Driven Auxiliary Feedwater Pump isolation 6) Monitor reading on Main Steam Monitors and Steam Driven Auxiliary Feedwater Pump exhaust radiation monitors	
	b) Check station ventilation vent radiation monitors for release indication	b) IF NO release indicated, THEN do the following: 1) Notify SEM that potential for source term development will be evaluated because monitors do not indicate release. 2) GO TO Step 18.e.
	c) Evaluate release consequences: 1) Assess onsite dose rate in area of break (after break is isolated) 2) Assess offsite dose rate	
	d) Report dose assessment (MIDAS or desk-top) results to SEM	
	e) Determine potential for source term to develop inside containment or from Main Steam Relief Valve lift	
	f) GO TO Step 21	

STEP	ACTION/EXPECTED RESPONSE	RESPONSE NOT OBTAINED
_____ 19	INITIATE RESPONSE ACTIONS FOR LOCA: a) Ask SEM for location of break b) Ask SEM for status of Containment Isolation - Phase "A" or "B", and any leak paths from the containment c) Recommend evacuation of Auxiliary Building and Safeguards Building to SEM AND Restrict entry until survey(s) confirm no radiological hazard exist d) Determine CHRRMS readings (RMS-165, 166 or RMS-265, 266) e) Check release occurred through monitored pathway(s) f) Report dose assessment (MIDAS or desk-top) results to SEM g) GO TO Step 21	e) Do the following: 1) Direct initiation of EPIP-4.03, DOSE ASSESSMENT TEAM CONTROLLING PROCEDURE. 2) Assess actual (unmonitored) or potential release from containment.

STEP	ACTION/EXPECTED RESPONSE	RESPONSE NOT OBTAINED
_____ 20	INITIATE RESPONSE ACTIONS FOR RADIOLOGICAL RELEASE:	GO TO Step 25.
	a) Record release pathway(s): _____	
	b) Verify event limited to plant systems	b) IF radiological event at ISFSI, THEN refer to Attachment 2, Response to ISFSI Event.
	c) Report dose assessment (MIDAS or desk-top) results to SEM	
	d) Ask SEM to place an individual at the monitor of interest to report increase or decrease in readings	
	e) Get sample of effluent pathway	e) IF sample NOT available, THEN use monitor readings for follow-up assessment.
	f) Analyze samples using normal Health Physics procedures	
	g) Consider initiation of EPIP-4.26, HIGH LEVEL ACTIVITY SAMPLE ANALYSIS	
	h) Verify that an exposure control individual is available to supply dosimetry	

(STEP 20 CONTINUED ON NEXT PAGE)

STEP	ACTION/EXPECTED RESPONSE	RESPONSE NOT OBTAINED
20	INITIATE RESPONSE ACTIONS FOR RADIOLOGICAL RELEASE: (Continued) i) Have RPS coordinate HP coverage needed for any of the following activities: • Damage Control Teams • Emergency Security activities • Access control • Personnel monitoring • Sample analysis j) Consider having RPS prepare for dispatch of Offsite Monitoring Teams: • Team assembly • Preparation of equipment and vehicles	
_____ 21	ENSURE 40CFR302 EPA NOTIFICATION REQUIREMENTS AND REPORTABLE QUANTITY CALCULATIONS ARE EVALUATED IN ACCORDANCE WITH NORMAL HP PROCEDURES	
_____ 22	CHECK IF RESULTS OF OFFSITE RELEASE ASSESSMENT INDICATE SITE BOUNDARY DOSE RATE ≥ 50 mrem/hr TEDE OR 250 mrem/hr THYROID CDE	GO TO Step 24.

STEP	ACTION/EXPECTED RESPONSE	RESPONSE NOT OBTAINED
_____ 23	DETERMINE OFFSITE PROTECTIVE MEASURES: a) Get an estimate of release duration (hours) from SEM b) Direct initiation of EPIP-4.07, PROTECTIVE MEASURES c) Give recommendation to SEM	a) Use 2 hour default.
_____ 24	CHECK LEOF (CEOF) HAS LEAD FOR OFFSITE DOSE ASSESSMENT	Do the following: a) Assure dose assessment result identification number recorded on all pages. b) Record initials on each page to document approval for issuance of results. c) Review offsite release assessment results with SEM. d) Give applicable dose assessment report to State/Local Emergency Communicator: • MIDAS Radiological Status Report (2 pages). • EPIP-4.03, DOSE ASSESSMENT TEAM CONTROLLING PROCEDURE, Attachment 1. e) Provide updated dose assessment results when any of the following occur: • Every 60 minutes during Alert or higher classification. • Within 15 minutes after a classification change. • Change in radiological conditions.

STEP	ACTION/EXPECTED RESPONSE	RESPONSE NOT OBTAINED

NOTE:
- The following step lists response actions that may have to be coordinated by the RAD. These actions are not listed in order of priority.
- A minimum of 2 (two) Offsite Monitoring Teams must be dispatched (i.e., sent into the field) upon a Site Area Emergency or higher emergency class.

_____ 25 REVIEW HP RESPONSE ACTIONS AND INITIATE RESPONSES ON A PRIORITY BASIS:

WHEN all necessary response actions addressed, THEN GO TO Step 37.

IF HP response action(s) needed,	THEN do the following:
Limiting Fault event (LOCA, Main Steam Line Break, SGTR or Fuel Handling Accident) occurs	RETURN TO Step 15.
New radiological release occurs	RETURN TO Step 20.
Event at ISFSI	RETURN TO Step 20.
New dose assessment results available	RETURN TO Step 12.
Emergency exposure authorization needed	Initiate EPIP-4.04, EMERGENCY PERSONNEL EXPOSURE AUTHORIZATION
Establishment of HP organization	GO TO Step 28.
Dispatch of Offsite Monitoring Team(s)	GO TO Step 29.
Dispatch of Inplant/Onsite Monitoring Team(s)	GO TO Step 31.
Dispatch of Chemistry Team(s)	GO TO Step 32.
Dispatch of LEOF Monitoring Team	GO TO Step 30.
Establishment of Access Control Areas	GO TO Step 32.
Evaluation of need for respiratory protection	GO TO Step 34.
Issuance of radioprotective drugs	GO TO Step 35.
Response to injured contaminated individual(s)	GO TO Step 26.
Evacuation of non-essential personnel	GO TO Step 36.
Radiological/Meteorological parameters needed from Main Control Room (due to unavailability of data to HP staff from plant computers)	Have Attachment 1, Radiological Data Worksheet, completed.
Turnover duties to relief	GO TO Step 27.

STEP	ACTION/EXPECTED RESPONSE	RESPONSE NOT OBTAINED
	NOTE: First Aid considerations must be given priority over decontamination of individual.	
_____ 26	INITIATE RESPONSE TO INJURED CONTAMINATED INDIVIDUAL:	
	a) Check if individual requires offsite medical treatment	a) RETURN TO Step 25.
	b) Direct initiation normal HP procedure(s) for response to contaminated injured personnel	
	c) Have RPS review personnel contamination surveys and confirm personnel contaminated	c) RETURN TO Step 25.
	d) Check if clothing removal and/or onsite decontamination eliminates contamination AND Internal contamination is NOT suspected	d) IF individual remains contaminated, THEN do the following: 1) Have HP Technician accompany the individual. 2) Recommend transport to MCV.
	e) RETURN TO Step 25	

STEP	ACTION/EXPECTED RESPONSE	RESPONSE NOT OBTAINED

_____ 27 GIVE TURNOVER TO RELIEF:

a) <u>WHEN</u> a more Senior Health Physics individual arrives onsite

<u>OR</u>

Relief - NEEDED, <u>THEN</u> brief successor on:

- Existing plant conditions
- Offsite release assessment performed
- Health Physics actions currently underway

b) Notify SEM of position change

c) Have relief remain for about 30 minutes to ensure proper turnover

d) RETURN TO Step 25

STEP	ACTION/EXPECTED RESPONSE	RESPONSE NOT OBTAINED

_____ 28 ESTABLISH HP EMERGENCY ORGANIZATION:

a) Establish Dose Assessment Team:

1) Assign 1 Team Leader and 2 Team Members

2) Assign EPIP-4.03, DOSE ASSESSMENT TEAM CONTROLLING PROCEDURE

b) Establish RPS position

AND

Assign EPIP-4.02, RADIATION PROTECTION SUPERVISOR CONTROLLING PROCEDURE

c) RETURN TO Step 25

NOTE:
- A minimum of 2 (two) Offsite Monitoring Teams must be dispatched (i.e., sent into the field) upon a Site Area Emergency or higher emergency class.
- The function of plume tracking/offsite monitoring will be the responsibility of the Radiological Assessment Coordinator upon LEOF activation.

_____ 29 ASSESS NEED FOR OFFSITE MONITORING:

a) Evaluate need for offsite monitoring with Dose Assessment Team Leader

b) Check if command and control of Offsite Monitoring Teams has been transferred to the LEOF — b) GO TO Step 29.d.

c) RETURN TO Step 25

(STEP 29 CONTINUED ON NEXT PAGE)

STEP	ACTION/EXPECTED RESPONSE	RESPONSE NOT OBTAINED

29 ASSESS NEED FOR OFFSITE MONITORING: (Continued)

d) Have RPS initiate EPIP-4.16, OFFSITE MONITORING

e) Evaluate protective measures for offsite teams:

- TEDE exposure may exceed 10CFR20 annual limits: Initiate EPIP-4.04, EMERGENCY PERSONNEL RADIATION EXPOSURE

- Thyroid CDE may exceed 25 Rem: Initiate EPIP-5.07, ADMINISTRATION OF RADIOPROTECTIVE DRUGS

- Consider placing teams further downwind

f) Discuss provisions with RPS:

1) Number of monitoring teams required

2) Protective clothing

3) Respiratory protection

4) Standby assembly of teams, vehicles and equipment

5) Notification of TSC prior to team dispatch

6) Initial team placement

7) Relay of samples/supplies between teams and station

8) Relief of teams

g) RETURN TO Step 25

STEP	ACTION/EXPECTED RESPONSE	RESPONSE NOT OBTAINED

_____ 30 ACTIVATE LEOF:

a) Have RPS initiate EPIP-4.18, MONITORING OF LEOF

b) Brief RAC on the following parameters:

- Existing plant conditions
- Current offsite dose projections
- HP actions underway

c) Have Dose Assessment Team Leader brief RAC on the following parameters:

- Offsite dose assessment
- Status and location of offsite monitoring teams

d) Have Dose Assessment Team Member continue transmittal of status information to LEOF:

- Meteorological data
- Monitor data
- Sample analysis data

e) RETURN TO Step 25

STEP	ACTION/EXPECTED RESPONSE	RESPONSE NOT OBTAINED

_____ 31 INITIATE IN-PLANT / ONSITE MONITORING:

a) Review parameters with RPS:

- Plant conditions
- Selection of monitoring and sample locations
- Protective gear (clothing, respirators), dosimetry and special precautions for teams
- Elevated radiation level readings
- Access control points
- Recent survey results

b) Have RPS assign EPIP-4.14, INPLANT MONITORING

AND

EPIP-4.15, ONSITE MONITORING

AND

EPIP-4.17, MONITORING OF EMERGENCY RESPONSE FACILITIES

AND

EPIP-4.18, MONITORING OF LEOF

(STEP 31 CONTINUED ON NEXT PAGE)

STEP	ACTION/EXPECTED RESPONSE	RESPONSE NOT OBTAINED
31	INITIATE IN-PLANT / ONSITE MONITORING: (Continued)	
	c) Notify RPS AND Ask for repeat survey of emergency response facilities for any of the following conditions: • Radiological release occurred • Release severity increases • Change in plume direction toward facility	c) GO TO Step 31.d.
	d) Check if survey data dictates the placement of control points to limit exposure and the spread of contamination	
	e) RETURN TO Step 25	

STEP	ACTION/EXPECTED RESPONSE	RESPONSE NOT OBTAINED

NOTE: Stop work dose rates at the Primary Sample Room, together with other indications of fuel failure, suggest dose equivalent iodine (DEI) levels in excess of 300 µCi/mL. This is a threshold used by the SEM for event classification.

_____ 32 INITIATE CHEMISTRY SAMPLING:

a) Check normal sample system - AVAILABLE (< 300 µCi/mL DEI anticipated)

a) Evaluate implementation of Contingency Plan considering the following:

- CH-94.300, HIGH RADIATION SAMPLING SYSTEM CONTROL.
- TSC Technical Support Team input (information contained in Emergency Response Guideline Executive Volume section on Evaluations by Plant Engineering Staff may support informed decision).

b) Review the following with RPS:

- Preferred sample point
- Analysis required for sample
- Use of normal sampling procedures or contingency sample plan
- Need to promptly report indication of stop work dose rates in the Primary Sample Room

c) Have RPS assign EPIP-4.35, CHEMISTRY SAMPLING

d) RETURN TO Step 25

STEP	ACTION/EXPECTED RESPONSE	RESPONSE NOT OBTAINED
_____ 33	ESTABLISH ACCESS CONTROL AREAS: a) Evaluate radiological hazards before permitting entrance into access controlled areas b) Arrange for HP coverage of emergency evolutions directed by SEM c) Consider having RPS generate an RWP for controlled area entrance requirements d) RETURN TO Step 25	a) GO TO Step 34.
_____ 34	EVALUATE RESPIRATORY PROTECTION REQUIREMENTS: a) Assess results of air sample analyses b) Recommend relocation of non-essential personnel from areas where high airborne activity is expected or airborne activity > 0.30 DAC c) Initiate EPIP-4.05, RESPIRATORY PROTECTION AND KI ASSESSMENT d) RETURN TO Step 25	

STEP	ACTION/EXPECTED RESPONSE	RESPONSE NOT OBTAINED

NOTE: Administration of Potassium Iodine Tables is preferably done prior to exposure, although administration of the drug within 2 hours is considered acceptable.

_____	35	DETERMINE NEED FOR ISSUANCE OF RADIOPROTECTIVE DRUGS:	
		a) Direct initiation of EPIP-4.05, RESPIRATORY PROTECTION AND KI ASSESSMENT	
		b) Determine if actual or projected exposure ≥ 25 Rem Thyroid CDE	b) RETURN TO Step 25.
		c) Ask SEM for approval to administer radioprotective drugs	c) IF approval NOT granted, THEN RETURN TO Step 25.
		d) Initiate EPIP-5.07, ADMINISTRATION OF RADIOPROTECTIVE DRUGS	
		e) Get supply of tablets from Health Physics Office	e) Get alternate supply from Surry Power Station.
		f) RETURN TO Step 25	

STEP	ACTION/EXPECTED RESPONSE	RESPONSE NOT OBTAINED

_____ 36 EVALUATE NEED TO EVACUATE/SHELTER NON-ESSENTIAL PERSONNEL:

a) Ask SEM for duration of release

b) Determine onsite exposure of non-essential personnel:

1) Ask RPS for results of plant surveys and samples

2) Check TEDE dose in occupied areas of station

3) Determine radioiodine dose commitment from concentration (µCi/cc) based on air sample data and exposure duration:

_____µCi/cc x 1.57E+6 x ____hrs = _____Rem

c) Check results indicate onsite exposure greater than or equal to the following:

- 1 Rem TEDE

OR

- 5 Rem Thyroid CDE

c) Do one of the following:

- IF exposure greater than 0.5 Rem TEDE or 1 Rem Thyroid CDE, THEN recommend sheltering

AND

RETURN TO Step 25

OR

- IF exposure less than 0.5 Rem TEDE and 1 Rem Thyroid CDE, THEN RETURN TO Step 25

d) Recommend that the SEM evacuate non-essential personnel

(STEP 36 CONTINUED ON NEXT PAGE)

STEP	ACTION/EXPECTED RESPONSE	RESPONSE NOT OBTAINED
36	EVALUATE NEED TO EVACUATE/SHELTER NON-ESSENTIAL PERSONNEL: (Continued) e) Assist in evacuation planning: 1) Review offsite release assessments 2) Check plume direction 3) Determine appropriate evacuation route and remote assembly area f) Have RPS assign EPIP-4.21, EVACUATION AND REMOTE ASSEMBLY AREA MONITORING g) Keep SEM informed about Emergency Assembly Area monitoring status h) RETURN TO Step 25	
_____ 37	BRIEF SEM AND RPS ON EMERGENCY STATUS AND RADIOLOGICAL TRENDS	
_____ 38	CHECK IF EMERGENCY HAS BEEN TERMINATED	RETURN TO Step 11.
_____ 39	NOTIFY RPS AND RAC OF EVENT TERMINATION	
_____ 40	CONSIDER EXTENDED USE OF MONITORING TEAMS FOR DATA COLLECTION	

STEP	ACTION/EXPECTED RESPONSE	RESPONSE NOT OBTAINED

_____ 41 REVIEW RECOVERY PHASE PARAMETERS WITH SEM:

- Access control to outside contaminated areas
- Return to normal access control throughout site
- Additional HP support personnel
- Radwaste packaging and disposal
- Assistance with decontamination

_____ 42 TERMINATE EPIP-4.01:

- Give completed EPIPs, forms, and other applicable records to the Nuclear Emergency Preparedness (TSC Emergency Procedures Coordinator if TSC activated)
- By: _____

  Date: _____

  Time: _____

-END-

NUMBER	ATTACHMENT TITLE	REVISION
EPIP-4.01	RADIOLOGICAL DATA WORKSHEET	20
ATTACHMENT 1		PAGE 1 of 1

DATE:_____ TIME:_____ UNIT:_____

Meteorological Data:

WIND DIRECTION (from): _____

SECTORS AFFECTED: _____

WIND SPEED (mph): _____

PRECIPITATION: _____

STABILITY CLASS: _____

RADIATION SYSTEM MONITORING DATA

VENT VENT A (VG-104) _____cpm (VG-179)_____µCi/sec

VENT VENT B (VG-113) _____cpm (VG-180)_____µCi/sec

PROCESS VENT (GW-102) _____cpm (GW-178)_____µCi/sec

AIR EJECTOR (SV-121) _____cpm (SV-221)_____cpm

VENT VENT A (VG-174) _____mR/hr

VENT VENT B (VG-175) _____mR/hr

PROCESS VENT (GW-173) _____mR/hr

---

mR/hr

MAIN STEAM: (MS-170)_____ (MS-171)_____ (MS-172)_____

(MS-270)_____ (MS-271)_____ (MS-272)_____

AFPT: (MS-176)_____ (MS-276)_____

CONTAINMENT MONITORS: R/hr

(RMS-161)_____ (RMS-164)_____ (RMS-261)_____ (RMS-264)_____

(RMS-162)_____ (RMS-165)_____ (RMS-262)_____ (RMS-265)_____

(RMS-163)_____ (RMS-166)_____ (RMS-263)_____ (RMS-266)_____

__ 1. Determine the following from Security or Operations (as appropriate):

- Any restrictions affecting personnel response to ISFSI.
- Readings on personal dosimetry (if available).
- Any visible breach in casks, e.g., number of casks affected, size of breach, etc.
- Any indication that cask contents dispersed from cask(s).
- Any indication that cask seal(s) lost.
- Estimated wind speed and direction.

__ 2. IF simultaneous response to both plant event and ISFSI event required, THEN prioritize HP response(s) based upon potential for adverse radiological consequences.

NOTE: Dose rates from holes offset by 90° or more are not additive.

__ 3. IF breach in cask(s) identified or anticipated, THEN do the following:

a) Notify Security to have responders avoid exposure from direction of breach.

b) IF cask contents dispersed from cask(s), THEN notify Security of potential for external and internal exposure hazards.

(STEP 3 CONTINUED ON NEXT PAGE)

NOTE: • The dose rate table and graph below are based on a 1-foot diameter hole. Therefore, smaller holes are bounded.

• The neutron dose rate is negligible relative to the gamma dose rate, approximately 0.1%.

3. IF breach in cask(s) identified or anticipated, THEN do the following: (continued)

c) Determine potential external exposure.

1) Use table or graph below for an approximate 1-foot diameter hole [Source: Calculation PA 0204]:

Location (meters)	Gamma Dose Rate (Rem/hr)	Neutron Dose Rate (Rem/hr)
Surface	5369.8	2.7804
3	57.95	0.01981
10	5.86	0.00239
50	0.19	< 0.0001
75	0.07	< 0.0001
100	0.04	< 0.0001
125	0.02	< 0.0001

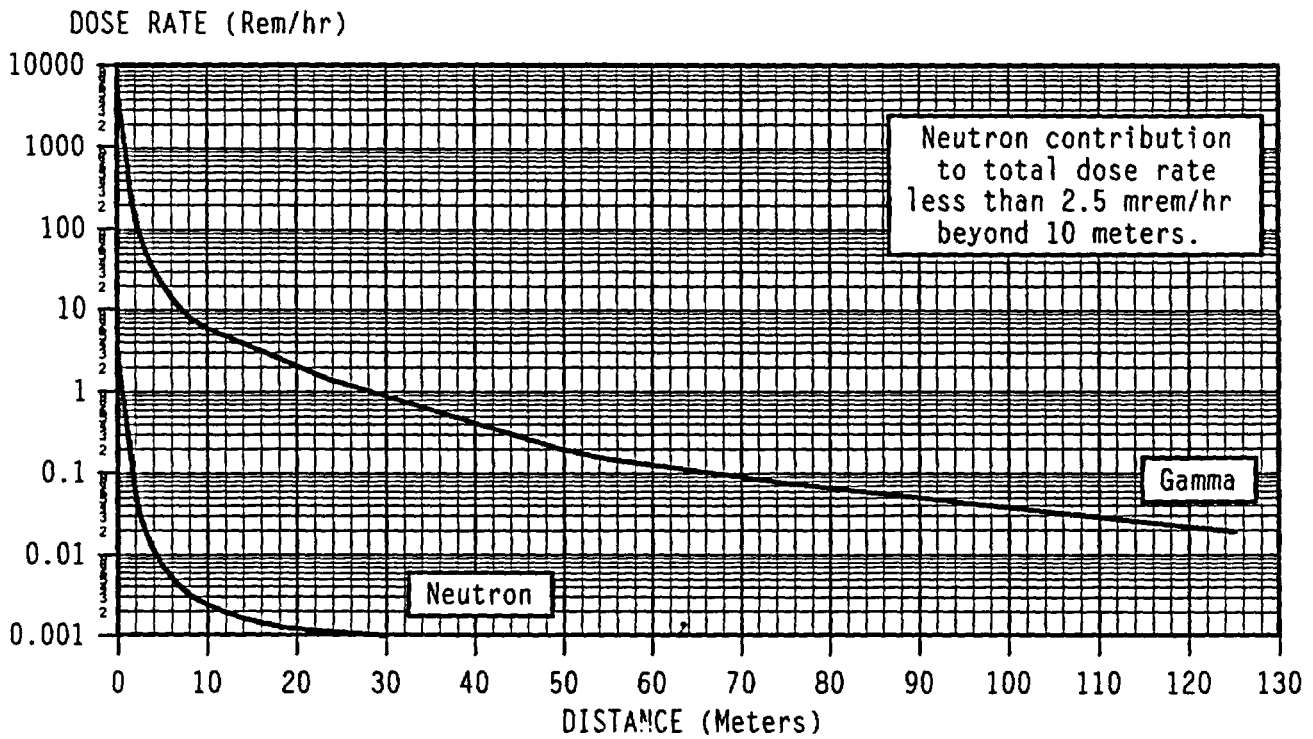

(STEP 3 CONTINUED ON NEXT PAGE)

NOTE: • Holes larger than 1-foot diameter may not respond as a point source. Therefore, in this case the reduction in dose rates over distance would be less. Thus, the multiplier factor of 5 as shown below.

• Exposure rates decrease in accordance with the inverse square rule.

3. IF breach in cask(s) identified or anticipated, THEN do the following: (continued)

c) Determine potential external exposure. (continued)

2) IF more than 1 hole facing same direction, THEN calculate dose rate using the following formula:

Dose Rate from Dose Rate Table	x	# of holes	=	Dose Rate, mrem/hr

3) IF hole(s) greater than 1-foot diameter, THEN multiply dose rate(s) by 5.

d) Notify the following of potential exposure determined above:

- SEM
- Security (via the Emergency Administrative Director when TSC activated)
- RPS

__ 4. Give the RPS guidance and direction for briefing and equipping team IAW EPIP-4.15, ONSITE MONITORING.

- Monitoring location and surveys required
- Hazards (radiological and physical safety)
- Protective gear (respirators, SCBA, protective clothing, dosimetry, shielding)
- Monitoring equipment (alpha and neutron survey equipment may be needed if cask contents damaged or dispersed)

IF access to ISFSI restricted, THEN notify RPS to assemble and hold team.

WHEN conditions allow for dispatch of Onsite Monitoring Team, THEN have RPS coordinate approach of Onsite Monitoring Team with Security Team.

NOTE: Most of the information needed for the Report of Radiological Conditions to the State will be unknown or not applicable, particularly early in an event at the ISFSI. Therefore, Radiological Status form Item 10, Remarks, will have to provide a description of a radiological event at the ISFSI.

__ 5. Use EPIP-4.03, DOSE ASSESSMENT TEAM CONTROLLING PROCEDURE, Attachment 1, Radiological Status, to provide the State and Local Emergency Communicator event information for transmittal to the Virginia EOC (refer to example remarks below).

- IF survey information available, THEN consider remarks such as: "Survey results indicate affected area limited to __ meters from affected cask in a ____ direction. Survey readings at a distance of ___ meters from the affected cask are below _____."
- IF external exposure estimate available, THEN consider remarks such as: "Preliminary analysis indicates direct exposure hazard ___ at ___ meters."
- IF dosimetry information available, THEN consider remarks such as: "Dosimetry readings for personnel ___ meters from the affected area are below ____."
- IF no information available, THEN consider remarks such as: "Access to the Independent Spent Fuel Storage Installation (ISFSI) is restricted due to ____ concerns. No radiological information is available. It is anticipated information may be available in ___ hours."

__ 6. Assure Dominion Nuclear Analysis & Fuel (NAF) Department notified. The NAF Fuel Performance Analysis Group is responsible for developing calculational methods for producing accident radiation doses for the ISFSI and storage casks. Results of this analysis may not be available during the accident response phase.

__ 7. RETURN TO procedure in effect.

VIRGINIA POWER
NORTH ANNA POWER STATION
EMERGENCY PLAN IMPLEMENTING PROCEDURE

NUMBER	PROCEDURE TITLE	REVISION
EPIP-4.02	RADIATION PROTECTION SUPERVISOR CONTROLLING PROCEDURE (With No Attachments)	15
		PAGE 1 of 13

PURPOSE

To assist Radiological Assessment Director in establishing the radiation protection program during an emergency.

LEVEL 2 DISTRIBUTION
This Document Should Be Verified
And Annotated To A Controlled Source
As Required to Perform Work

ENTRY CONDITIONS

Any one of the following:

1. ALERT or higher emergency classification has been declared.
2. Activation by EPIP-4.01, RADIOLOGICAL ASSESSMENT DIRECTOR CONTROLLING PROCEDURE.
3. As deemed necessary by the Radiological Assessment Director.

Approvals on File

Effective Date 7/1/2003

STEP	ACTION/EXPECTED RESPONSE	RESPONSE NOT OBTAINED

NOTE: A sequence of events (e.g., data transmission, team dispatch) should be recorded as accurately as time allows. Event times and your initials should be included.

_____ 1 INITIATE PROCEDURE:

- By: _____

  Date: _____

  Time: _____

_____ 2 ESTABLISH RADIATION PROTECTION SUPERVISOR OFFICE:

a) Evaluate HP area radiation levels:

1) Do surveys and sampling

2) Use frisker, personnel contamination monitors and Count Room analysis equipment to check for abnormal indications

b) Verify HP area - HABITABLE:

b) IF HP area NOT habitable, THEN do the following:

1) Establish RPS office in a habitable area (e.g., OSC, Emergency Switchgear Room).

2) Notify Exposure Control of new work area.

3) GO TO Step 2.d.

c) Establish RPS Office in HP Shift Supervisor area

d) Establish continuous monitoring (e.g., ratemeter, DAD)

STEP	ACTION/EXPECTED RESPONSE	RESPONSE NOT OBTAINED

_____ 3 ESTABLISH COMMUNICATIONS WITH TSC:

a) Establish telephonic communication (e.g., RAD, Dose Assessment)

b) Establish radio communications:

1) Set radio call group to "EPA"

2) Verify capability to contact TSC using radio

2) Notify RAD of radio inoperability.

NOTE: The Emergency Plan has an augmentation goal of 14 HP personnel for Alert or higher classification.

_____ 4 NOTIFY RAD OF NUMBER OF HP PERSONNEL AVAILABLE

_____ 5 ASK RAD FOR BRIEFING:

- Emergency Classification
- Plant Status
- Assistance required

STEP	ACTION/EXPECTED RESPONSE	RESPONSE NOT OBTAINED
_____ 6	ESTABLISH EXPOSURE CONTROL:	
	a) Ensure an individual is available to staff the Exposure Control station	
	b) Verify Exposure Control area - HABITABLE	b) Evaluate relocation to OSC.
	c) Have Exposure Control do the following:	
	1) Ensure a supply of TLDs is available for issue	
	2) Maintain exposure records	
	3) Assign dosimetry in accordance with normal HP procedures	

STEP	ACTION/EXPECTED RESPONSE	RESPONSE NOT OBTAINED

NOTE:
- The following step lists response actions coordinated by the RPS. These actions are not listed in order of priority.
- A minimum of 2 (two) Offsite Monitoring Teams must be dispatched (i.e., sent into the field) upon a Site Area Emergency or higher emergency class.

_____ 7 REVIEW HP RESPONSE ACTIONS AND INITIATE RESPONSES ON A PRIORITY BASIS:

IF HP response action(s) needed,	THEN do the following:
Inplant Monitoring	GO TO Step 8.
Onsite Monitoring	GO TO Step 9.
Offsite Monitoring	GO TO Step 10.
Control Room/TSC/OSC/LEOF Monitoring	GO TO Step 11.
Personnel injury/contamination	GO TO Step 12.
Evacuation Monitoring	GO TO Step 13.
Chemistry Sample Monitoring	GO TO Step 14.
Gaseous effluent sampling	Initiate EPIP-4.24, GASEOUS EFFLUENT SAMPLING DURING AN EMERGENCY.
Access Control Limits - EXCEEDED: • Airborne contamination exceeds 0.30 DAC • Contamination ≥ 1000 dpm per 100 cm^2 • Survey indicates ≥ 1000 mR/hr	Establish access control(s): • HP notification prior to entry. • Use of RWPs. • Roping/posting affected areas.
Sample analysis results - AVAILABLE	Give results to RAD.
HP area habitability problem - IDENTIFIED	RETURN TO Step 2.
Relief shift or additional staff - NEEDED	GO TO Step 15.
Turnover duties to relief	GO TO Step 16.
Emergency - TERMINATED	GO TO Step 17.

STEP	ACTION/EXPECTED RESPONSE	RESPONSE NOT OBTAINED

_____ 8 INITIATE INPLANT MONITORING:

a) Ask RAD for the following:

- Required monitoring locations (consider ERFs, Security and Chemistry)
- Type of surveys required

b) Evaluate possible radiological hazards in survey area(s)

c) Assign Inplant Monitoring Team Leader and Member (only one must be an HP Technician)

d) Initiate EPIP-4.14, INPLANT MONITORING

e) Notify Inplant Monitoring Team Leader of the location and surveys required

f) Ensure protective gear and monitoring equipment is provided, as necessary:

- Respirators
- Protective Clothing
- Dosimetry
- Monitoring Equipment
- Air Sampling Equipment

g) Identify routes of entry that may reduce exposure

h) Assign portable radios and Radio Call Group (Radio use restricted in Radio Frequency Interference (RFI) areas. Gai-Tronics may also be used.)

i) Send out team(s)

j) Notify RAD of survey information, when received

k) RETURN TO Step 7

STEP	ACTION/EXPECTED RESPONSE	RESPONSE NOT OBTAINED

NOTE: Onsite monitoring teams should be dispatched upon an Alert classification, or as specified by Radiological Assessment Director.

_____ 9 INITIATE ONSITE MONITORING:

a) Ask RAD for the following:

- Monitor location
- Surveys required
- Radiological Hazards

b) Coordinate transportation (if required):

- Health Physics truck
- Site Vice President's Vehicle
- Station Manager's Vehicle

c) Assign On-site Monitoring Team Leader and Member (only one must be an HP Technician)

d) Initiate EPIP-4.15, ONSITE MONITORING

e) Notify Onsite Team leader of location and surveys required

f) Ensure protective gear and monitoring equipment is provided, as necessary:

- Respirators
- Protective Clothing
- Dosimetry
- Monitoring Equipment
- Air Sampling Equipment

g) Assign Radio Call Group

h) Send out monitoring team(s)

i) Establish radio contact with monitoring team(s)

j) Notify RAD of survey information, when received

k) RETURN TO Step 7

STEP	ACTION/EXPECTED RESPONSE	RESPONSE NOT OBTAINED

NOTE: Two Offsite Monitoring Kits, one Onsite Monitoring Kit and one Remote Assembly Area Monitoring Kit are located in the Exposure Control Facility.

_____ 10 INITIATE OFFSITE MONITORING:

a) Ask RAD for the following:

1) Offsite monitoring locations

2) Number of offsite teams

3) Assessment of offsite radiological hazards

4) Assessment of need to issue radioprotective drugs to monitoring teams

b) Assign Offsite Monitoring Team Leader and Member (only 1 need be an HP Technician)

c) Initiate EPIP-4.16, OFFSITE MONITORING

d) Assist in obtaining vehicle:

- Health Physics truck
- Site Vice President's Vehicle
- Station Manager's Vehicle

e) Assign emergency kit/equipment:

- Battery powered air sampler
- RM-14 with H.P. 210 probe
- Record number of Emergency Kits issued

f) Give team briefing (include initial reporting location)

g) Review protective gear required:

- Respirator and/or radioprotective drugs
- Protective clothing
- Dosimetry

h) Assign Radio Call Group

i) Send out Monitoring Team(s)

j) RETURN TO Step 7

STEP	ACTION/EXPECTED RESPONSE	RESPONSE NOT OBTAINED

NOTE: Monitoring of emergency response facilities (ERFs) should begin within 60 minutes following an ALERT classification.

_____ 11 INITIATE CONTROL ROOM/TSC/OSC/LEOF MONITORING:

a) Evaluate the following when determining monitoring frequency:

- Spread of contamination from service buildings
- Status of effluent release
- Increase in emergency classification
- Change in plume direction

b) Assign the following EPIP(s):

- EPIP-4.17, MONITORING OF EMERGENCY RESPONSE FACILITIES
- EPIP-4.18, MONITORING OF LEOF
- EPIP-4.28, TSC/LEOF RADIATION MONITORING SYSTEM

c) Notify RAD about ERF habitability and survey results

d) RETURN TO Step 7

STEP	ACTION/EXPECTED RESPONSE	RESPONSE NOT OBTAINED
_____ 12	CHECK PERSONNEL - CONTAMINATED:	RETURN TO Step 7.
	a) Check personnel - INJURED	a) GO TO Step 12.c.
	b) Initiate normal station HP procedure for responding to contaminated injured personnel	
	c) Assign EPIP-4.06, PERSONNEL MONITORING AND DECONTAMINATION	
	d) Update RAD on status	
	e) RETURN TO Step 7	

NOTE: EPIP-4.21, EVACUATION AND REMOTE ASSEMBLY AREA MONITORING, contains instructions for surveying parking areas to determine contamination levels prior to evacuation if a radiological release occurred and time is available.

_____ 13 INITIATE EVACUATION MONITORING:

a) Initiate EPIP-4.21, EVACUATION AND REMOTE ASSEMBLY AREA MONITORING

b) Notify RAD when team is dispatched

c) RETURN TO Step 7

STEP	ACTION/EXPECTED RESPONSE	RESPONSE NOT OBTAINED

_____ 14 INITIATE CHEMISTRY SAMPLING:

a) Consult with RAD about the following:

- Preferred sample point
- Analysis required for sample
- Use of normal sampling procedures or contingency sample plan

b) Assign in-plant survey to determine dose rate at sample station

c) Notify RAD of survey results

d) Initiate RWP (if required)

e) Initiate EPIP-4.35, CHEMISTRY SAMPLING

f) Ensure HP coverage available during sampling and sample preparation

g) RETURN TO Step 7

STEP	ACTION/EXPECTED RESPONSE	RESPONSE NOT OBTAINED
_____ 15	EVALUATE NEED FOR ADDITIONAL PERSONNEL: a) Ask RAD about projected duration of emergency b) Check relief shift and/or additional personnel - NEEDED c) Prepare relief schedule and/or increased staffing schedule d) Give schedule to RAD for approval e) Initiate callout of scheduled personnel (if needed) f) Notify RAD when callout complete g) RETURN TO Step 7	b) RETURN TO Step 7.
_____ 16	CHECK TURNOVER - REQUIRED (due to arrival of a more senior HP representative or relief): a) Provide successor briefing on plant conditions and HP actions underway b) Notify RAD of position change c) Stay with relief for approximately 30 minutes d) RETURN TO Step 7	

STEP	ACTION/EXPECTED RESPONSE	RESPONSE NOT OBTAINED

_____ 17 TERMINATE EMERGENCY RESPONSE:

a) Notify HP staff when emergency is terminated

b) Review recovery actions with RAD

c) Maintain access control as required

d) Initiate replacement of procedures and equipment used during the emergency

_____ 18 TERMINATE EPIP-4.02:

a) Give completed EPIP-4.02, all other applicable EPIPs, forms and records to the Radiological Assessment Director

b) Completed By: _____

Date: _____

Time: _____

-END-

VIRGINIA POWER
NORTH ANNA POWER STATION
EMERGENCY PLAN IMPLEMENTING PROCEDURE

NUMBER	PROCEDURE TITLE	REVISION
EPIP-4.09	SOURCE TERM ASSESSMENT (With 6 Attachments)	14
		PAGE 1 of 12

PURPOSE

Provide guidance and data to Dose Assessment Team to more accurately predict offsite releases.

LEVEL 2 DISTRIBUTION
This Document Should Be Verified
And Annotated To A Controlled Source
As Required to Perform Work

ENTRY CONDITIONS

Any of the following:

1. Entry from EPIP-4.01, RADIOLOGICAL ASSESSMENT DIRECTOR CONTROLLING PROCEDURE.
2. Entry from EPIP-4.03, DOSE ASSESSMENT TEAM CONTROLLING PROCEDURE.

Approvals on File

Effective Date 7/1/2003

STEP	ACTION/EXPECTED RESPONSE	RESPONSE NOT OBTAINED

_____ 1 INITIATE PROCEDURE:

- By: _____

  Date: _____

  Time: _____

NOTE:
- Source term is expressed in Ci/sec.
- Source term calculations derived from monitor readings should be used only for initial assessment and to establish trends. Sampling should also be performed to more accurately determine the source term.
- Source term derived from Containment High Range Monitors or Containment sampling is used for analysis following a LOCA. Sampling of Containment atmosphere following a LOCA should be considered after plant conditions have stabilized only.

_____ 2 DETERMINE METHOD FOR SOURCE TERM CALCULATION:

- Station Monitors - GO TO Step 3
- Sample Effluent - GO TO Step 4
- Sample of Station Inventory - GO TO Step 7
- Containment High Range Monitor (Inner Crane Wall) - GO TO Step 8
- Sample of Containment Air - GO TO Step 9

STEP	ACTION/EXPECTED RESPONSE	RESPONSE NOT OBTAINED

NOTE:
- The following monitors may used until removed by Design Change 99-006, Ventilation Radiation Monitoring System Replacement: GW-102, VG-104, VG-113, GW-173, VG-174 and VG-175.
- MGPI Normal Range Noble Gas monitors: 178-1, 179-1 and 180-1. MGPI High Range Noble Gas monitors: 178-2, 179-2 and 180-2.
- Should Vent Vent or Process Vent Normal Range monitors be inoperable or offscale, assessments should continue using High Range and/or MGPI monitors.
- The Condenser Air Ejector may be diverted to containment.

_____ 3 DETERMINE SOURCE TERM FROM STATION MONITORS:

a) Get monitor readings and effluent flow rates (cfm) for release pathways of concern:

- Vent Vent A: VG-104, VG-179, VG-174
- Vent Vent B: VG-113, VG-180, VG-175
- Process Vent: GW-102, GW-178, GW-173
- Condenser Air Ejector: SV-121, SV-221
- Main Steam: MS-170, MS-171, MS-172, MS-270, MS-271, MS-272
- AFWPT: MS-176, MS-276

a) IF monitor readings NOT available, THEN GO TO Step 4.

(STEP 3 CONTINUED ON NEXT PAGE)

STEP	ACTION/EXPECTED RESPONSE	RESPONSE NOT OBTAINED

3 DETERMINE SOURCE TERM FROM STATION MONITORS: (Continued)

b) Record the following information on Attachment 1:

- Date
- Time
- Flow rate (when applicable) and monitor reading for pathway(s) of concern:

> Normal Range: cpm (use NET cpm: Gross - Background)
> MGPI: µCi/sec or µCi/cc
> High Range: mR/hr

c) Determine accident type

d) Determine status of effluent charcoal filtration

e) Determine Monitor Conversion Factors (MCF) and Iodine Conversion Factors (Iodine CF) using Attachment 2

f) Record conversion factors on Attachment 1

g) Use Attachment 1 to calculate Iodine and Noble Gas release rates, Ci/sec

h) Add Ci/sec for all pathways of concern

AND

Record results at end of Attachment 1

i) Give results to RAD or RAC

STEP	ACTION/EXPECTED RESPONSE	RESPONSE NOT OBTAINED

NOTE:
- In the event that a release involves multiple pathways, Step 4 should be repeated for each pathway. Results of each analysis are then added to determine the total source term.
- The Condenser Air Ejector may be diverted to containment, eliminating need to assess source term.

_____ 4 DETERMINE SOURCE TERM FROM EFFLUENT SAMPLE:

a) Ask Radiation Protection Supervisor to initiate EPIP-4.24, GASEOUS EFFLUENT SAMPLING DURING AN EMERGENCY, for sample of appropriate pathway:

- Vent Vent A
- Vent Vent B
- Process Vent
- Condenser Air Ejector

b) Get monitor reading:

- Maximum:_____
- Reading at time of sample:_____

c) Have Count Room analyze sample:

- Request initiation of EPIP-4.26, HIGH LEVEL ACTIVITY SAMPLE ANALYSIS, for high activity samples

a) IF source term determination from effluent sample NOT required, THEN GO TO Step 7.

(STEP 4 CONTINUED ON NEXT PAGE)

STEP	ACTION/EXPECTED RESPONSE	RESPONSE NOT OBTAINED
4	DETERMINE SOURCE TERM FROM EFFLUENT SAMPLE: (Continued)	
	d) Record nuclide activity on Attachment 3, left column AND Add results to determine Noble Gas and Iodine gross activity, µCi/ml	
	e) Check if this is an initial source term assessment	e) GO TO Step 4.g.
	f) Check if sample taken at maximum monitor reading	f) IF sample NOT taken at maximum monitor reading, THEN do the following: 1) Determine corrected µCi/cc for gross Noble Gas and for Iodine: $\frac{\text{MAX READING}}{\text{READING AT TIME OF SAMPLE}} \times \frac{\mu Ci}{cc} = \text{CORRECTED } \mu Ci/cc$ 2) Record results on Attachment 4. 3) GO TO Step 4.h.
	g) Get Noble Gas activity from Attachment 3 and record activity on to Attachment 4	
	h) Get effluent flow rate (cfm)	
	i) Record cfm on Attachment 4	
	j) Record Iodine activity on Attachment 4	

(STEP 4 CONTINUED ON NEXT PAGE)

STEP	ACTION/EXPECTED RESPONSE	RESPONSE NOT OBTAINED

4 DETERMINE SOURCE TERM FROM EFFLUENT SAMPLE: (Continued)

k) Use Attachment 4 to calculate Noble Gas and Iodine source term (Ci/sec)

l) Add Ci/sec for applicable pathways at end of Attachment 4

_____ 5 DETERMINE DDE, TEDE AND THYROID CDE DOSE CONVERSION FACTORS BASED ON SAMPLE RESULTS:

a) Use Attachment 3 that was previously filled out for gross activity determination

a) Do Steps 4.a through 4.d

AND

GO TO Step 5.b.

b) Do calculations on Attachment 3 to determine the following conversion factors:

- Sample DDE DCF
- Sample TEDE DCF
- Sample THY CDE DCF

c) Determine TEDE/DDE ratio:

$$\frac{\text{TEDE DCF}}{\text{DDE DCF}} = \text{Ratio TEDE/DDE}$$

d) Give source term results, Ci/sec, and TEDE/DDE ratio to RAD or RAC

STEP	ACTION/EXPECTED RESPONSE	RESPONSE NOT OBTAINED

_____ 6 DETERMINE SITE BOUNDARY DOSE RATES BASED ON EFFLUENT SAMPLE RESULTS:

a) Ask RAD or RAC if Site Boundary dose rate calculation based on effluent sample - DESIRED

a) GO TO Step 7.

b) Record TEDE and THY CDE DCFs from bottom of Attachment 3 on to Attachment 5:

- Record on calculation line for each affected pathway

c) Get effluent flow rate (cfm) for each affected pathway

d) Record CFM on Attachment 5

NOTE:
- Main Tower Delta T is the preferred source of stability class. Sigma Theta (Backup Tower) is the secondary source.
- Primary source of wind speed is the Main Tower Lower Level indicator. Alternates sources are (1) Backup Tower, and (2) Main Tower Upper Level.

e) Determine Stability Class and wind speed:

- Ask RAD or RAC

f) Use Attachment 5 Site Boundary X/Q value for appropriate Stability Class and divide by wind speed

g) Record corrected X/Q value on calculation line for each affected pathway

h) Do calculations to determine Site Boundary TEDE and THY CDE dose rate, mrem/hr

i) Give results to RAD or RAC

STEP	ACTION/EXPECTED RESPONSE	RESPONSE NOT OBTAINED
_____ 7	DETERMINE SOURCE TERM FROM STATION INVENTORY: a) Check if release originated from a gas storage tank (ie. Waste Gas Decay Tank, Volume Control Tank, etc.) b) Have tank sampled c) Ask Dose Assessment Team Leader to get information on volume of release from Emergency Technical Director d) Get sample activity results, µCi/ml, for total of Noble Gas and Iodine: • Use Count Room results or completed Attachment 3 e) Record the following on Attachment 4: • Noble Gas activity • Iodine activity • Volume of release, ml • Duration of release, sec f) Use Attachment 4, Station Inventory section, to determine Noble Gas and Iodine release rate, Ci/sec g) Give results to RAD or RAC	a) GO TO Step 8.

STEP	ACTION/EXPECTED RESPONSE	RESPONSE NOT OBTAINED

_____ 8 DETERMINE SOURCE TERM FROM CONTAINMENT HIGH RANGE MONITOR (INNER CRANE WALL):

a) Check if LOCA conditions exist — a) GO TO Step 10.

b) Get dose rate (R/hr) from Containment High Range Monitor (Inner Crane Wall) of affected unit:

- Unit 1 Higher of RMS-165 or RMS-166:_____
- Unit 2 Higher of RMS-265 or RMS-266:_____

c) Determine length of time (hours) since unit shutdown

d) Use Attachment 6 to estimate Curies Noble Gas (Ci NG) and Curies Iodine (Halogens) available for release

e) Calculate release rate:

_____Ci Noble Gas x 4.35E-8 = _____Ci/Sec Noble Gas

_____Ci Iodine x 4.35E-8 = _____Ci/sec Iodine

f) Give results to RAD or RAC

STEP	ACTION/EXPECTED RESPONSE	RESPONSE NOT OBTAINED
_____ 9	DETERMINE SOURCE TERM FROM CONTAINMENT AIR SAMPLE:	
	a) Check if LOCA conditions exist	a) GO TO Step 10.
	b) Check plant conditions - STABLE	b) Wait until plant conditions are stable before taking sample.
	c) Check normal sample system - AVAILABLE (< 300 µCi/mL DEI anticipated)	c) Evaluate implementation of Contingency Plan considering the following: • CH-94.300, HIGH RADIATION SAMPLING SYSTEM CONTROL. • TSC Technical Support Team input (information contained in Emergency Response Guideline Executive Volume section on Evaluations by Plant Engineering Staff may support informed decision).
	d) Determine the following: • Preferred sample point • Analysis required for sample • Use of normal sampling procedures or contingency sample plan	
	e) Ask RPS assign EPIP-4.35, CHEMISTRY SAMPLING	
	f) Record sample results (nuclide concentration) on Attachment 3, left column	
	g) Determine gross activity, µCi/ml, for Noble Gas and Iodine	
	h) Calculate release rates: µCi/ml x 2.25E+3 x 1.0E-6 = Ci/Sec	
	i) Record results: _____Ci/sec Noble Gas _____Ci/sec Iodine	
	j) Give results to RAD or RAC	

STEP	ACTION/EXPECTED RESPONSE	RESPONSE NOT OBTAINED

_____ 10 TERMINATE EPIP-4.09:

- Give completed EPIP-4.09, forms, and other applicable records to the Radiological Assessment Director
- Completed by: _____

  Date: _____

  Time: _____

-END-

NUMBER	ATTACHMENT TITLE	REVISION
EPIP-4.09	MONITOR Ci/sec WORKSHEET	14
ATTACHMENT 1		PAGE 1 of 2

NOTE: • Monitor Conversion Factors (MCF) and Iodine Conversion Factors (Iodine CF) are provided on Attachment 2.

• MGPI Normal Range Noble Gas monitors: 178-1, 179-1 and 180-1. MGPI High Range Noble Gas monitors: 178-2, 179-2 and 180-2.

Date:_____; Time:_____

VENT VENT A:

	CPM	x	MCF	x	CFM		=	Ci/sec
VG-104:	_____	x	_____	x	_____		=	_____
VG-179:	µCi/sec	x	MCF	x	1.00E-6		=	Ci/sec
(-1,-2)	_____	x	_____	x	1.00E-6		=	_____
VG-179:	µCi/cc	x	MCF	x	CFM	x 4.72E-4	=	Ci/sec
(-1,-2)	_____	x	_____	x	_____	x 4.72E-4	=	_____
	mR/hr	x	MCF	x	CFM		=	Ci/sec
VG-174:	_____	x	_____	x	_____		=	_____

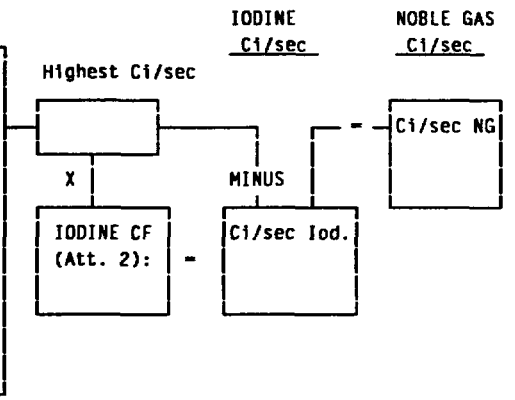

VENT VENT B:

	CPM	x	MCF	x	CFM		=	Ci/sec
VG-113:	_____	x	_____	x	_____		=	_____
VG-180:	µCi/sec	x	MCF	x	1.00E-6		=	Ci/sec
(-1,-2)	_____	x	_____	x	1.00E-6		=	_____
VG-180:	µCi/cc	x	MCF	x	CFM	x 4.72E-4	=	Ci/sec
(-1,-2)	_____	x	_____	x	_____	x 4.72E-4	=	_____
	mR/hr	x	MCF	x	CFM		=	Ci/sec
VG-175:	_____	x	_____	x	_____		=	_____

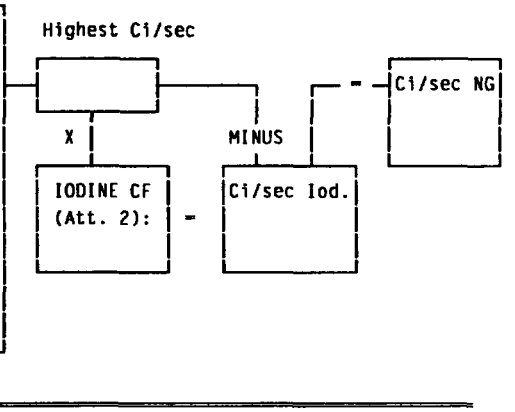

AIR EJECTOR:

	CPM	x	MCF	x	CFM	=	Ci/sec
SV-121:	_____	x	_____	x	_____	=	
	CPM	x	MCF	x	CFM	=	Ci/sec
SV-221:	_____	x	_____	x	_____	=	

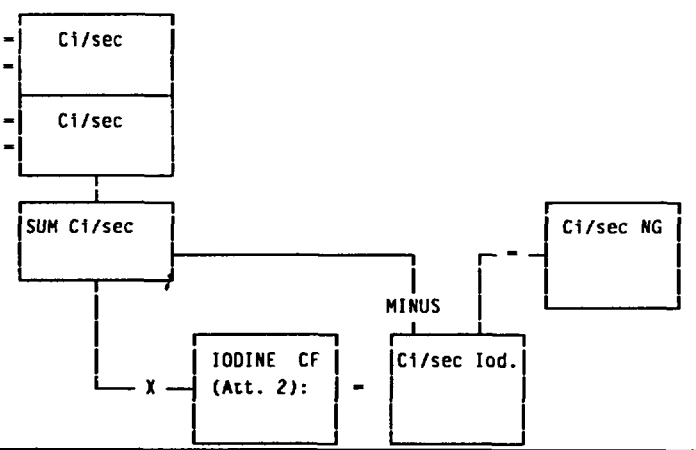

PROCESS VENT:

	CPM	x	MCF	x	CFM		=	Ci/sec
GW-102:	_____	x	_____	x	_____		=	_____
GW-178:	µCi/sec	x	MCF	x	1.00E-6		=	Ci/sec
(-1,-2)	_____	x	_____	x	1.00E-6		=	_____
GW-178:	µCi/cc	x	MCF	x	CFM	x 4.72E-4	=	Ci/sec
(-1,-2)	_____	x	_____	x	_____	x 4.72E-4	=	_____
	mR/hr	x	MCF	x	CFM		=	Ci/sec
GW-173:	_____	x	_____	x	_____		=	_____

Highest Ci/sec

X

IODINE CF (Att. 2): =

MINUS

Ci/sec Iod.

IODINE Ci/sec

NOBLE GAS Ci/sec

= Ci/sec NG

MAIN STEAM:

	mR/hr	x	# valves	x	MCF	=	Ci/sec
MS-170:	_____	x	_____	x	_____	=	_____
MS-171:	_____	x	_____	x	_____	=	_____
MS-172:	_____	x	_____	x	_____	=	_____
MS-270:	_____	x	_____	x	_____	=	_____
MS-271:	_____	x	_____	x	_____	=	_____
MS-272:	_____	x	_____	x	_____	=	_____

SUM OF Ci/sec

X

IODINE CF (Att. 2): =

MINUS

Ci/sec Iod.

= Ci/sec NG

AFWPT:

	mR/hr	x	MCF	=	Ci/sec
MS-176:	_____	x	_____	=	_____
MS-276:	_____	x	_____	=	_____

SUM OF Ci/sec

X

IODINE CF (Att. 2): =

MINUS

Ci/sec Iod.

= Ci/sec NG

TOTAL Curies/sec: Sum above results for Iodine and for Noble gas (separately).

TOTAL Ci/sec IOD

TOTAL Ci/sec NG

Completed by: _____

Date/Time: _____/_____

NOTE: The following monitors may be used until removed by Design Change 99-006, Ventilation Radiation Monitoring System Replacement: VG-104 and VG-174.

MONITOR CONVERSION FACTORS (MCF) for Vent Vent A:

MONITOR	MSLB	SGTR	NORMAL
VG-104	9.7E-11	7.0E-11	4.7E-11
VG-174	2.4E-2	1.8E-2	1.1E-2
VG-179-1	8.8E-4	8.6E-4	8.1E-4
VG-179-2	1.0E-3	1.0E-3	1.1E-3

NOTE: The following monitors may be used until removed by Design Change 99-006, Ventilation Radiation Monitoring System Replacement: VG-113 and VG-175.

MONITOR CONVERSION FACTORS (MCF) for Vent Vent B:

MONITOR	FHA	LOCA MELT	LOCA GAP	LOCA PC	NORMAL
VG-113	1.4E-11	4.0E-11	4.3E-11	1.9E-11	1.4E-11
VG-175	5.9E-2	1.8E-3	1.7E-3	4.1E-3	5.8E-2
VG-180-1	9.2E-4	7.9E-4	8.2E-4	8.5E-4	9.2E-4
VG-180-2	1.0E-3	7.3E-3	6.8E-3	1.5E-3	1.0E-3

MONITOR CONVERSION FACTORS (MCF) for Air Ejector:

MONITOR	MSLB	SGTR	NORMAL
SV-121,-221	3.1E-7	2.2E-7	1.4E-7

(CONTINUED ON NEXT PAGE)

NOTE: The following monitors may be used until removed by Design Change 99-006, Ventilation Radiation Monitoring System Replacement: GW-102 and GW-173.

MONITOR CONVERSION FACTORS (MCF) for Process Vent:

MONITOR	WGDT	VCT	NORMAL
GW-102	6.1E-11	1.1E-10	2.3E-10
GW-173	5.0E-2	2.3E-2	2.7E-2
GW-178-1	7.7E-4	9.0E-4	9.3E-4
GW-178-2	1.1E-3	1.0E-3	1.1E-3

MONITOR CONVERSION FACTOR (MCF) for Main Steam:

MONITOR	MSLB	SGTR	LKD. ROTOR	NORMAL
MS-1(2)70 MS-1(2)71 MS-1(2)72	5.3E+0	6.9E+0	3.9E-1	5.7E+0

MONITOR CONVERSION FACTORS (MCF) for AFWPT:

MONITOR	LOCA MELT	LOCA GAP	LOCA PC	NORMAL
MS-176	1.9E+0	4.2E+0	4.3E-1	3.5E+0
MS-276	2.6E+0	5.7E+0	5.6E-1	4.6E+0

IODINE CONVERSION FACTORS (ICF):

	MSLB	SGTR	FHA	WGDT	LOCA MELT	LOCA GAP	LOCA PC	LKD. ROTOR
UNFILTERED	2.0E-1	5.1E-3	2.4E-3	1.8E-5	5.4E-1	8.8E-2	6.2E-2	2.6E-1
FILTERED	5.4E-4	5.2E-5	2.4E-4	1.8E-6	5.4E-2	8.8E-3	6.2E-3	------

NUMBER	ATTACHMENT TITLE	REVISION
EPIP-4.09	NOBLE GAS, IODINE AND DOSE CONVERSION FACTOR WORKSHEET USING SAMPLE ANALYSIS RESULTS	14
ATTACHMENT 3		PAGE 1 of 1

Sample Identification: _____; Sample Time: _____

NOTE: • Total Noble Gas and Iodine activity, µCi/ml, are for use on Attachment 4.

• Total TEDE DCF and THY CDE DCF are for use on Attachment 5.

NUCLIDE	ACTIV. µCi/ml		EPA DDE DCF		SAMPLE DDE		EPA TEDE DCF		SAMPLE TEDE		EPA THY CDE DCF		SAMPLE THY CDE
Kr-83M	_____		NA										
Kr-85	_____	x	1.3	=	_____	x	1	=	_____				
Kr-85M	_____	x	93	=	_____	x	1	=	_____				
Kr-87	_____	x	510	=	_____	x	1	=	_____				
Kr-88	_____	x	1300	=	_____	x	1	=	_____				
Kr-89	_____	x	1200	=	_____	x	1	=	_____				
Xe-131M	_____	x	4.9	=	_____	x	1	=	_____				
Xe-133	_____	x	20	=	_____	x	1	=	_____				
Xe-133M	_____	x	17	=	_____	x	1	=	_____				
Xe-135	_____	x	140	=	_____	x	1	=	_____				
Xe-135M	_____	x	250	=	_____	x	1	=	_____				
Xe-137	_____	x	110	=	_____	x	1	=	_____				
Xe-138	_____	x	710	=	_____	x	1	=	_____				

TOTAL NOBLE GAS, µCi/ml:	CONTINUE ADDING DOWN	CONTINUE ADDING DOWN
_____		

I-125	_____	x	6.3	=	_____	x	4762	=	_____	x	32	=	_____
I-129	_____	x	4.8	=	_____	x	43750	=	_____	x	33	=	_____
I-131	_____	x	220	=	_____	x	241	=	_____	x	24.5	=	_____
I-132	_____	x	1400	=	_____	x	3.5	=	_____	x	1.6	=	_____
I-133	_____	x	350	=	_____	x	43	=	_____	x	14.6	=	_____
I-134	_____	x	1600	=	_____	x	1.9	=	_____	x	0.43	=	_____
I-135	_____	x	950	=	_____	x	8.5	=	_____	x	4.7	=	_____

TOTAL IODINE, µCi/ml:	TOTAL DDE DCF:	TOTAL TEDE DCF:	TOTAL THY. CDE DCF:
_____	_____	_____	_____

Completed by: _____

Date/Time: _____/_____

NUMBER	ATTACHMENT TITLE	REVISION
EPIP-4.09	SAMPLE EFFLUENT Ci/sec WORKSHEET	14
ATTACHMENT 4		PAGE 1 of 1

MONITOR	µCi/ml		CFM				Ci/sec NOBLE GAS	Ci/sec IODINE
VV A:	N.G.	x	CFM	x	4.72E-4			
	_____	x	_____	x	4.72E-4	=	_____	
	IOD.	x	CFM	x	4.72E-4			
	_____	x	_____	x	4.72E-4	=		_____
VV B:	N.G.	x	CFM	x	4.72E-4			
	_____	x	_____	x	4.72E-4	=	_____	
	IOD.	x	CFM	x	4.72E-4			
	_____	x	_____	x	4.72E-4	=		_____
PV:	N.G.	x	CFM	x	4.72E-4			
	_____	x	_____	x	4.72E-4	=	_____	
	IOD.	x	CFM	x	4.72E-4			
	_____	x	_____	x	4.72E-4	=		_____
AIR EJECTOR #1:								
	N.G.	x	CFM	x	4.72E-4			
	_____	x	_____	x	4.72E-4	=	_____	
	IOD.	x	CFM	x	4.72E-4			
	_____	x	_____	x	4.72E-4	=		_____
AIR EJECTOR #2:								
	N.G.	x	CFM	x	4.72E-4			
	_____	x	_____	x	4.72E-4	=	_____	
	IOD.	x	CFM	x	4.72E-4			
	_____	x	_____	x	4.72E-4	=		_____

STATION INVENTORY:

	N.G.	x	VOLUME (mls)	x	1.0E-6	/ SECONDS		
	_____	x	_____	x	1.0E-6	/ _____ =	_____	
	IOD.	x	VOLUME (mls)	x	1.0E-6	/ SECONDS		
	_____	x	_____	x	1.0E-6	/ _____ =		_____

SUM Ci/sec: _____ NG _____ IOD

Completed by: _____

Date: _____

Time: _____

NUMBER	ATTACHMENT TITLE	REVISION
EPIP-4.09	SAMPLE EFFLUENT SITE BOUNDARY DOSE RATE WORKSHEET	14
ATTACHMENT 5		PAGE 1 of 1

NOTE: TEDE and Thyroid CDE factors from Attachment 3 are to be applied to this worksheet.

X/Q, SITE BOUNDARY:

STABILITY CLASS						
A	B	C	D	E	F	G
1.84E-6 Windspeed	1.65E-5 Windspeed	5.98E-5 Windspeed	1.77E-4 Windspeed	3.46E-4 Windspeed	7.26E-4 Windspeed	1.40E-3 Windspeed

MONITOR	TEDE DCF OR THY CDE DCF		CFM				X/Q WINDSPEED		TEDE mrem/hr	THY. CDE mrem/hr
VV A:	TEDE	x	CFM	x	4.72E-1	x	X/Q/WINDSPEED			
	_____	x	_____	x	4.72E-1	x	_____	-	_____	
	THY CDE	x	CFM	x	4.72E-1	x	X/Q/WINDSPEED			
	_____	x	_____	x	4.72E-1	x	_____	-		_____
VV B:	TEDE	x	CFM	x	4.72E-1	x	X/Q/WINDSPEED			
	_____	x	_____	x	4.72E-1	x	_____	-	_____	
	THY CDE	x	CFM	x	4.72E-1	x	X/Q/WINDSPEED			
	_____	x	_____	x	4.72E-1	x	_____	-		_____
PV:	TEDE	x	CFM	x	4.72E-1	x	X/Q/WINDSPEED			
	_____	x	_____	x	4.72E-1	x	_____	-	_____	
	THY CDE	x	CFM	x	4.72E-1	x	X/Q/WINDSPEED			
	_____	x	_____	x	4.72E-1	x	_____	-		_____
AIR EJECTOR #1:										
	TEDE	x	CFM	x	4.72E-1	x	X/Q/WINDSPEED			
	_____	x	_____	x	4.72E-1	x	_____	-	_____	
	THY CDE	x	CFM	x	4.72E-1	x	X/Q/WINDSPEED			
	_____	x	_____	x	4.72E-1	x	_____	-		_____
AIR EJECTOR #2:										
	TEDE	x	CFM	x	4.72E-1	x	X/Q/WINDSPEED			
	_____	x	_____	x	4.72E-1	x	_____	-	_____	
	THY CDE	x	CFM	x	4.72E-1	x	X/Q/WINDSPEED			
	_____	x	_____	x	4.72E-1	x	_____	-		_____

STATION INVENTORY:										
	TEDE	x	VOLUME (mls)	x	1.0E-3 /	SECONDS	x	X/Q/WINDSP.		
	_____	x	_____	x	1.0E-3 /	_____	x	_____	-	_____
	THY CDE	x	VOLUME (mls)	x	1.0E-3 /	SECONDS	x	X/Q/WINDSP.		
	_____	x	_____	x	1.0E-3 /	_____	x	_____	-	_____

Completed by: _____ SUM mrem/hr: _____ TEDE _____ THY CDE

Date/Time: _____ / _____

NUMBER	ATTACHMENT TITLE	REVISION
EPIP-4.09	MATRIX:	14
ATTACHMENT 6	CHRRMS - EVENT - AVAILABLE CURIES	PAGE 1 of 2

NOTE:
- No letdown or sprays are assumed available.
- Containment Air concentration (μCi/cc) = Ci Cont. Air x 1.92E-5.
- RCS concentration (μCi/cc) = Ci Cont. Air x 3.765E-3.
- Data is given for 0, 1, 2 and 4 hours after LOCA occurs.

HOURS AFTER LOCA	CHRRMS R/hr	EVENT DESCRIPTION	Ci N.G. Cont. Air	Ci IODINE (HALOGEN) Cont. Air	RCS D.E. I-131 μCi/ml
0	1.5E+6	100% NG, 50% HAL Released to Cont. Air	8.2E+8 Ci	4.4E+8 Ci	1.99E+5 μCi/ml
	1.5E+5	10% NG, 5% HAL Released to Cont. Air	8.2E+7 Ci	4.4E+7 Ci	1.99E+4 μCi/ml
	1.5E+4	1% NG, .5% HAL Released to Cont. Air	8.2E+6 Ci	4.4E+6 Ci	1.99E+3 μCi/ml
	1.9E+3	100% GAP Released to Cont. Air	1.74E+6 Ci	1.59E+6 Ci	2.76E+3 μCi/ml
	1.9E+2	10% GAP Released to Cont. Air	1.74E+5 Ci	1.59E+5 Ci	2.76E+2 μCi/ml
	1.9E+1	1% GAP Released to Cont. Air	1.74E+4 Ci	1.59E+4 Ci	2.76E+1 μCi/ml
	9.0	1% Failed Fuel Primary Gas Release	6.12E+4 Ci	2.00E+3 Ci	2.40E+0 μCi/ml

HOURS AFTER LOCA	CHRRMS R/hr	EVENT DESCRIPTION	Ci N.G. Cont. Air	Ci IODINE (HALOGEN) Cont. Air
1	5.5E+5	100% NG, 50% HAL Released to Cont. Air	3.57E+8 Ci	2.72E+8 Ci
	5.5E+4	10% NG, 5% HAL Released to Cont. Air	3.57E+7 Ci	2.72E+7 Ci
	5.5E+3	1% NG, .5% HAL Released to Cont. Air	3.57E+6 Ci	2.72E+6 Ci
	1.75E+3	100% GAP Released to Cont. Air	1.69E+6 Ci	1.45E+6 Ci
	1.75E+2	10% GAP Released to Cont. Air	1.69E+5 Ci	1.45E+5 Ci
	1.75E+1	1% GAP Released to Cont. Air	1.69E+4 Ci	1.45E+4 Ci
	8.0	1% Failed Fuel Primary Gas Release	6.01E+4 Ci	1.84E+3 Ci

NUMBER	ATTACHMENT TITLE	REVISION
EPIP-4.09	MATRIX:	14
ATTACHMENT 6	CHRRMS - EVENT - AVAILABLE CURIES	PAGE 2 of 2

NOTE:
- No Letdown or Sprays are assumed available.
- Containment Air concentration (μCi/cc) = Ci Cont. Air x 1.92E-5.
- RCS concentration (μCi/cc) = Ci Cont. Air x 3.765E-3.
- Data is given for 0, 1, 2 and 4 hours after LOCA occurs.

HOURS AFTER LOCA	CHRRMS R/hr	EVENT DESCRIPTION	Ci N.G. Cont. Air	Ci IODINE (HALOGEN) Cont. Air
2	4.0E+5	100% NG, 50% HAL Released to Cont. Air	3.14E+8 Ci	2.26E+8 Ci
	4.0E+4	10% NG, 5% HAL Released to Cont. Air	3.14E+7 Ci	2.26E+7 Ci
	4.0E+3	1% NG, .5% HAL Released to Cont. Air	3.14E+6 Ci	2.26E+6 Ci
	1.5E+3	100% GAP Released to Cont. Air	1.65E+6 Ci	1.37E+6 Ci
	1.5E+2	10% GAP Released to Cont. Air	1.65E+5 Ci	1.37E+5 Ci
	1.5E+1	1% GAP Released to Cont. Air	1.65E+4 Ci	1.37E+4 Ci
	7.5	1% Failed Fuel Primary Gas Release	6.00E+4 Ci	1.73E+3 Ci

HOURS AFTER LOCA	CHRRMS R/hr	EVENT DESCRIPTION	Ci N.G. Cont. Air	Ci IODINE (HALOGEN) Cont. Air
4	2.75E+5	100% NG, 50% HAL Released to Cont. Air	2.70E+8 Ci	1.78E+8 Ci
	2.75E+4	10% NG, 5% HAL Released to Cont. Air	2.70E+7 Ci	1.78E+7 Ci
	2.75E+3	1% NG, .5% HAL Released to Cont. Air	2.70E+6 Ci	1.78E+6 Ci
	1.2E+3	100% GAP Released to Cont. Air	1.59E+6 Ci	1.25E+6 Ci
	1.2E+2	10% GAP Released to Cont. Air	1.59E+5 Ci	1.25E+5 Ci
	1.2E+1	1% GAP Released to Cont. Air	1.59E+4 Ci	1.25E+4 Ci
	7	1% Failed Fuel Primary Gas Release	5.85E+4 Ci	1.56E+3 Ci

VIRGINIA POWER
NORTH ANNA POWER STATION
EMERGENCY PLAN IMPLEMENTING PROCEDURE

NUMBER	PROCEDURE TITLE	REVISION
EPIP-4.26	HIGH LEVEL ACTIVITY SAMPLE ANALYSIS (With 2 Attachments)	12
		PAGE 1 of 6

PURPOSE

To provide guidance for analyzing high activity samples during an emergency.

LEVEL 2 DISTRIBUTION
This Document Should Be Verified
And Annotated To A Controlled Source
As Required to Perform Work

ENTRY CONDITIONS

Any one of the following:

1. Activation by EPIP-4.35, CHEMISTRY SAMPLING.
2. Activation by another EPIP.
3. Detector dead time exceeds 10%.
4. Sample activity greater than 10 mrem/hr.

Approvals on File

Effective Date 7/1/2003

STEP	ACTION/EXPECTED RESPONSE	RESPONSE NOT OBTAINED
_____ 1	INITIATE PROCEDURE: • By: _____ Date: _____ Time: _____	
_____ 2	VERIFY HP COUNT ROOM AREA RADIATION LEVELS PERMIT SAMPLE ANALYSIS	IF use of alternate analysis facility required, THEN establish alternate analysis facility in Admin Annex HP Lab. IF alternate facility NOT available, THEN do the following: a) Ask RPS for assistance in preparation for sample shipment offsite. b) GO TO Step 13.

NOTE: Gross failure of fuel cladding may yield significant quantities of noble gases or volatiles, as well as fission products, in the sample. Use of protective clothing and respiratory protection is advisable during sample preparation.

_____ 3	ACTIVATE RWP FOR POST-ACCIDENT SAMPLE OF REACTOR COOLANT OR CONTAINMENT AIR	IF NOT analyzing a post-accident reactor coolant or containment air sample, THEN ask RPS to assess need for RWP.

STEP	ACTION/EXPECTED RESPONSE	RESPONSE NOT OBTAINED

_____ 4 DETERMINE RESPONSE ACTIONS BASED ON SAMPLE ACTIVITY LEVEL:

IF the following condition exists:	THEN do the following:
Sample activity GREATER THAN 1000 mR/hr	GO TO Step 6.
Sample activity GREATER THAN 10 mR/hr (but LESS THAN 1000 mR/hr)	a. Take sample to Hot Lab or HRSS hood. b. GO TO Step 5.
Sample activity yields GREATER THAN 10% detector dead time	a. Take sample to Hot Lab or HRSS hood. b. GO TO Step 5.
Sample activity LESS THAN 10 mR/hr	a. Take sample to Count Room. b. GO TO Step 11.

_____ 5 DETERMINE FOLLOW-UP ACTIONS:

- Dilute sample: GO TO Step 6
- Allow sample to decay: GO TO Step 9
- Reduce sample volume: GO TO Step 10
- Analyze sample in elevated position: GO TO Step 12

STEP	ACTION/EXPECTED RESPONSE	RESPONSE NOT OBTAINED
_____ 6	VERIFY LIQUID OR GAS SAMPLE TO BE DILUTED:	IF diluting radioiodine or particulate air sample, or if sample dilution is NOT acceptable, THEN GO TO Step 9.
	a) Use a Fume Hood when doing dilutions in Hot Lab or HRSS hood	
	b) Verify LIQIUD sample to be diluted	b) IF diluting GASEOUS sample, THEN do the following: 1) Perform a 1:100 dilution (0.01 times original volume). 2) GO TO Step 11.
	c) Verify liquid sample from source other than Sentry System	c) IF sample activity of liquid sample from Sentry System LESS THAN 1000 mR/hr, THEN GO TO Step 6.d. IF sample activity of liquid sample from Sentry System GREATER THAN 1000 mR/hr, THEN GO TO Step 7.
	d) Do LIQUID sample dilution: 1) Determine appropriate dilution ratio, e.g., 1:10 dilution (0.1 times original volume), 1:1000 dilution (0.001 times original volume)	
	2) Perform dilution	
	3) Check sample activity - WITHIN LIMITS	3) IF sample activity still too high, THEN do additional dilution(s) to yield an acceptable activity level.
	4) GO TO Step 11	

STEP	ACTION/EXPECTED RESPONSE	RESPONSE NOT OBTAINED
_____ 7	GET THE FOLLOWING EQUIPMENT: • Operable Fume Hood • 1,000 ml volumetric flasks partially filled with demineralized water (≈ 800 ml) • Dilutor Assembly • Lead bricks (as needed) • Phillips-head screwdriver • Adjustable wrench • Vent tube with attached needle • One squeeze bottle of dilution water • Grease pencil • Three tape strips (≈ 4" each) • Sample containers	
_____ 8	INITIATE ATTACHMENT 2, DILUTE SAMPLE USING SENTRY SYSTEM	
_____ 9	CHECK TIME AVAILABLE TO ALLOW SAMPLE DECAY PRIOR TO ANALYSIS: a) Isolate sample to prevent personnel exposure b) Keep sample for later analysis c) GO TO Step 11	IF air sample, THEN do the following: 1) Separate particulate and silver zeolite cartridges. 2) Count particulate and silver zeolite cartridge separately. 3) GO TO Step 12. IF sample volume to be reduced, THEN GO TO Step 10. IF sample to be analyzed, THEN GO TO Step 11.

STEP	ACTION/EXPECTED RESPONSE	RESPONSE NOT OBTAINED
_____ 10	REDUCE SAMPLE VOLUME:	
	a) Verify GAS sample	a) IF LIQUID sample, THEN do the following: 1) Put desired sample volume in suitable container with a calibrated geometry. 2) Dilute sample (to appropriate mark) with water.
	b) Record volume of undiluted sample in the container	
_____ 11	VERIFY BOTH THE FOLLOWING CONDITIONS EXIST: • Verify sample dose rate reads LESS THAN 10 mR/hr • Calibrated elevated geometry NOT available for use	RETURN TO Step 5.
_____ 12	TAKE SAMPLE TO COUNT ROOM FOR ANALYSIS IAW NORMAL HP PROCEDURES	
_____ 13	TERMINATE EPIP-4.26: • Give completed EPIP-4.26, forms, and other applicable records to the RPS • Completed by: _____ Date: _____ Time: _____	

-END-

NUMBER	ATTACHMENT TITLE	REVISION
EPIP-4.26	HRSS DILUTOR ASSEMBLY	12
ATTACHMENT 1	FIGURE 1	PAGE 1 of 4

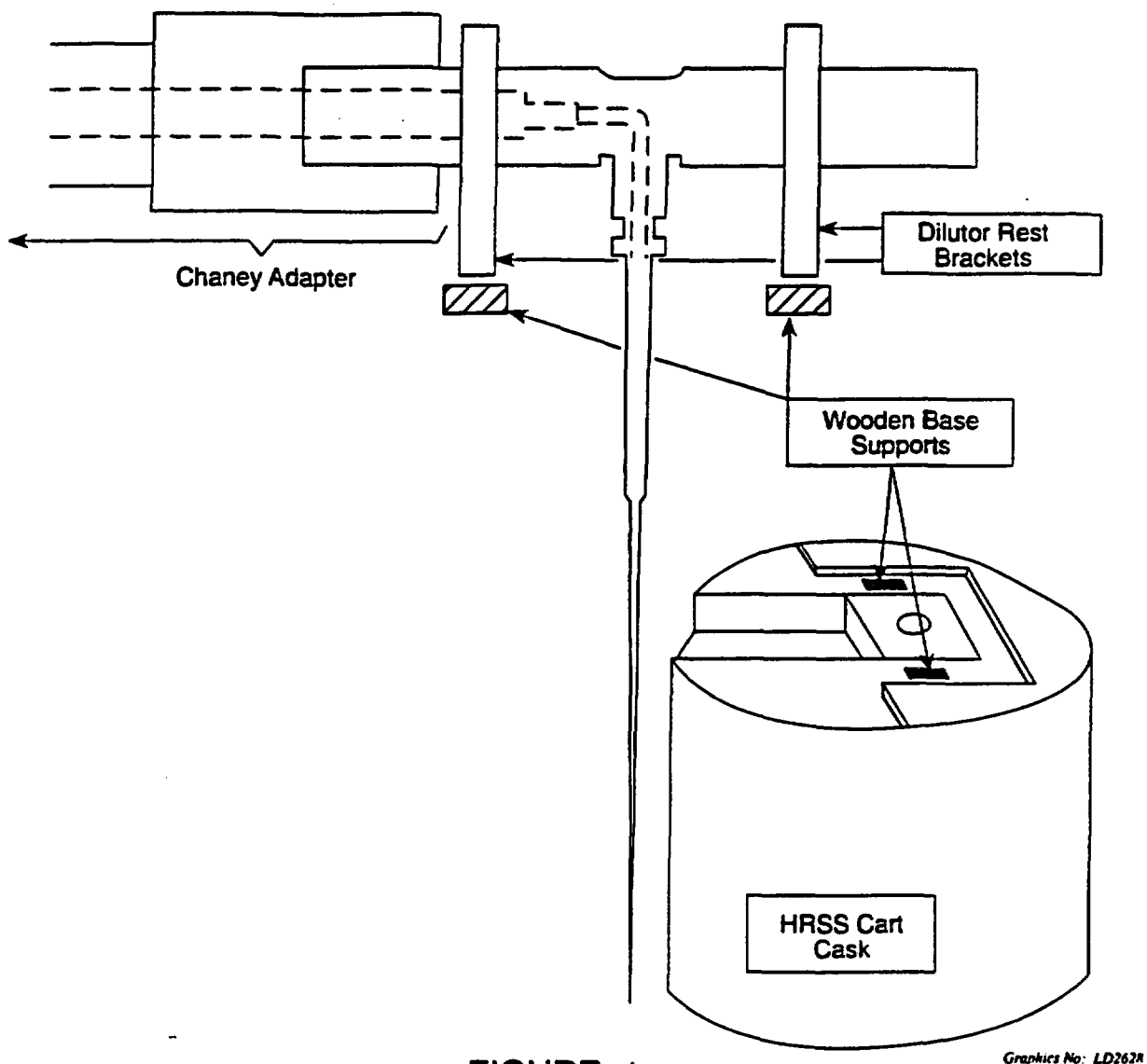

FIGURE 1
HRSS DILUTOR ASSEMBLY

DILUTOR ASSEMBLY INCLUDES SYRINGE AND CHANEY ASSEMBLIES

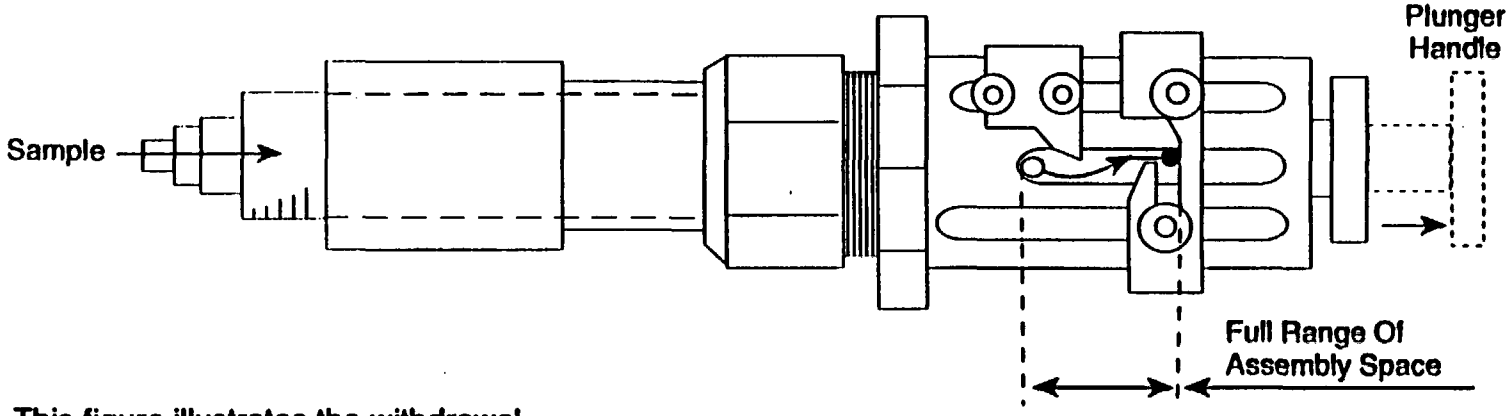

This figure illustrates the withdrawal of the plunger handle to capture a > 2.0 ml sample.

FIGURE 2

Graphics No: BP5624

CHANEY ADAPTER

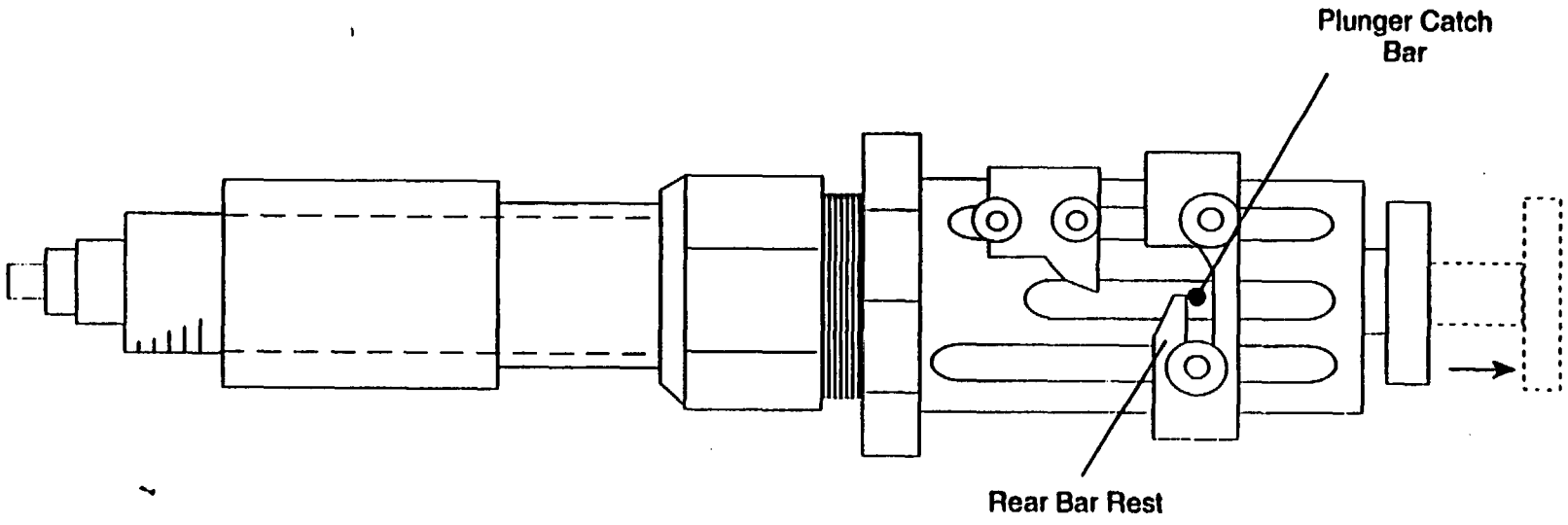

Figure illustrates the resting of the plunger catch bar on the rear bar rest following the withdrawal of sample.

FIGURE 3

Graphics No: BP5614

CHANEY ADAPTER

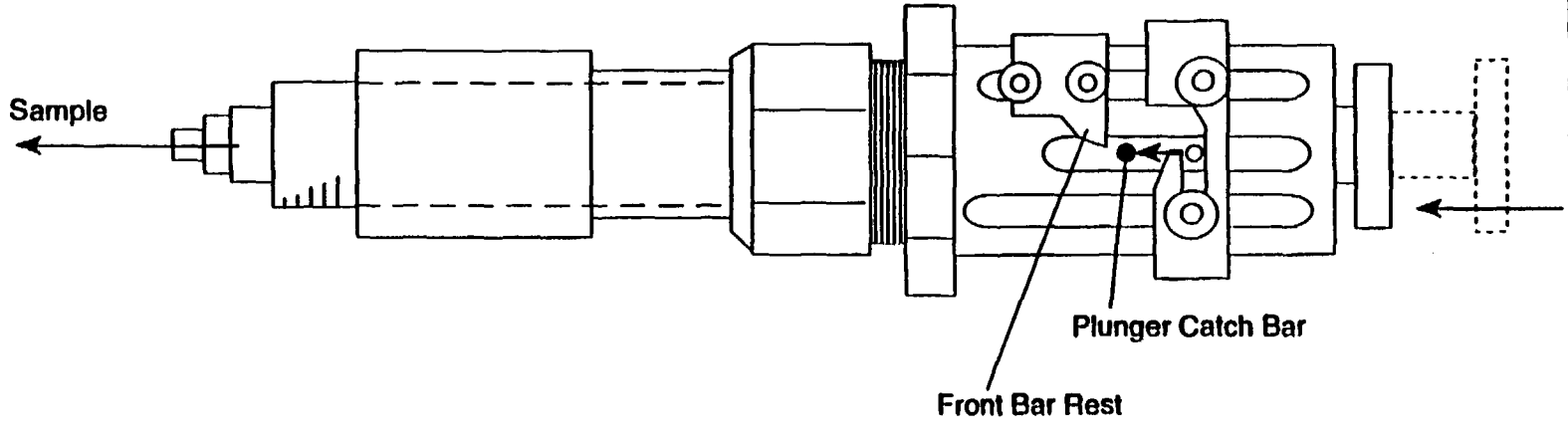

Figure illustrates the expulsion of sample into flask or tared vial. Plunger catch bar travels from rear to front bar rest.

FIGURE 4

Graphics No: BP5634

CHANEY ADAPTER

NUMBER	ATTACHMENT TITLE	REVISION
EPIP-4.26	DILUTE SAMPLE USING SENTRY SYSTEM	12
ATTACHMENT 2		PAGE 1 of 2

1) Place 1000 ml volumetric flask in fume hood.

2) Position cask near the fume hood.

3) Remove auxiliary shield hold-down bolts, as needed.

4) Remove needle plug.

5) IF radiation levels increase when plug is removed, THEN use lead bricks to reduce streaming.

6) Place end of vent tube in strong vacuum area of hood and tape down to inside of the hood.

7) Carefully insert vent needle into guide and puncture septum to vent vial.

8) Remove needle and store in hood.

9) Place support blocks in appropriate locations so that dilutor rest brackets will sit squarely on them (see Attachment 1, Figure 1).

10) Ensure syringe plunger is in the fully expelled position.

11) Carefully insert needle of dilutor into guide and bring to rest on support blocks.

12) Slowly withdraw maximum amount of sample (greater than 2.0 mls) by withdrawing plunger handle full range of assembly space (see Attachment 1, Figure 2).

13) Bring the plunger catch bar to rest on the rear bar rest (see Attachment 1, Figure 3).

14) Carefully remove dilutor assembly from needle guide by pulling up in one straight motion.

15) Carefully insert needle into neck of volumetric flask.

16) Carefully touch tip of needle to wall of flask while slowly expelling contents of syringe and depress plunger handle only as far as front bar rest (see Attachment 1, Figure 4). This expells exactly 2.0 mls.

17) Add dilution water to volumetric flask to bring level up to 1000 mls.

18) Label 1 liter volumetric flask with date, time of sample, sample location, and one of the following:

- 0.002 RCS for diluted HRSS

OR

- 2 mls for an undiluted sample.

19) Check 1 liter volumetric flask is LESS THAN 10 mR/hr, then GO TO Step 20 of this Attachment 2

OR

IF NOT LESS THAN 10 mR/hr, THEN GO TO EPIP-4.26, Step 5.

20) Get HP assistance and select a suitable sample container with a calibrated geometry.

21) Measure diluted sample from Step 18 above into selected sample container with the calibrated geometry.

22) Label container with date, sample time, sample location and actual mls of RCS in the sample geometry:

$$\text{Actual mls RCS} = \frac{\text{mls sample from Step 18}}{1000} \times \text{mls solution from Step 21}$$

23) Remove temporary shielding (if installed) and replace auxiliary shield on cask. Replace needle shield when time permits.

24) GO TO EPIP-4.26, Step 12.

VIRGINIA POWER
NORTH ANNA POWER STATION
EMERGENCY PLAN IMPLEMENTING PROCEDURE

NUMBER	PROCEDURE TITLE	REVISION
EPIP-4.35	CHEMISTRY SAMPLING (With No Attachments)	0 PAGE 1 of 11

PURPOSE

To provide controls for chemistry sampling of the Reactor Coolant System, containment atmosphere and containment sump.

LEVEL 2 DISTRIBUTION
This Document Should Be Verified
And Annotated To A Controlled Source
As Required to Perform Work

ENTRY CONDITIONS

Any one of the following:

1. Alert or higher emergency classification has been declared.
2. Activation by EPIP-4.02, Radiation Protection Supervisor Controlling Procedure.
3. As deemed necessary by the Radiological Assessment Director.

Approvals on File

Effective Date 7/1/2003

STEP	ACTION/EXPECTED RESPONSE	RESPONSE NOT OBTAINED
_____ 1	INITIATE EPIP-4.35: • By: _____ Date: _____ Time: _____	
_____ 2	CHECK WITH RADIATION PROTECTION SUPERVISOR TO ENSURE NORMAL CHEMISTRY SAMPLING IS ACCEPTABLE	IF sampling to be conducted under provisions of the Contingency Plan, THEN GO TO Step 13.
_____ 3	CHECK IF SAMPLE POINT IS AVAILABLE IN PRIMARY SAMPLE ROOM	IF sample point is NOT available in primary sample room, THEN determine location of alternate sample point.

NOTE: Prompt notification of RPS upon detection of stop work dose rates at the Primary Sample Room is essential for timely classification decision-making.

_____ 4 BRIEF SAMPLE PERSONNEL:

a) Review sampling procedure

b) Review ingress and egress routes

c) Review RWP requirements

d) Review enroute hazards

e) Review operation of RABBIT sample transfer system

f) Review criteria for promptly reporting stop work dose rate

STEP	ACTION/EXPECTED RESPONSE	RESPONSE NOT OBTAINED

_____ 5 DISPATCH SAMPLING PERSONNEL:

a) Assure sampling personnel have proper materials and personal protection equipment

b) Give sampling personnel a copy of this procedure

_____ 6 GO TO SAMPLE LOCATION:

a) Use pre-planned travel route to sample location

b) Continuously monitor radiation dose rates

c) Verify radiation dose rates - EXPECTED

c) IF unexpected radiation dose rates are found, THEN leave area.

* *

CAUTION: • Do not open RABBIT transfer system while sending sample.

• Samples may become stuck in the RABBIT system (e.g. due to loss of vacuum). System piping can be monitored to determine the location of the stuck RABBIT. The Radiation Protection Supervisor should be notified if this occurs.

* *

_____ 7 PERFORM SAMPLING:

(STEP 7 CONTINUED ON NEXT PAGE)

STEP	ACTION/EXPECTED RESPONSE	RESPONSE NOT OBTAINED
7	PERFORM SAMPLING: (Continued)	
	a) Verify sampling from Primary Sample Room	a) IF NOT performing sample from Primary Sample Room, THEN do the following: 1) Perform sampling in designated alternate location. 2) Leave sample area. a) Monitor sample dose rates. b) Maintain ALARA (reduce exposure). c) GO TO Step 7.e.
	b) Collect required sample volume	
	c) Turn on RABBIT sample transfer system at primary sample room	c) IF NOT operable, THEN do the following: 1) Transfer sample manually in accordance with HP Technician instructions. 2) Leave sample area. a) Monitor sample dose rates. b) Maintain ALARA (reduce exposure). c) GO TO Step 7.e.
	d) Send sample to Hot Lab	
	e) Leave sample area by pre-planned route	

STEP	ACTION/EXPECTED RESPONSE	RESPONSE NOT OBTAINED
_____ 8	PREPARE SAMPLE FOR ANALYSIS: a) Put sample in a clean poly bag b) Label sample with the following: • Date and time • Sample type • Sample volume • Dose rate	
_____ 9	CHECK SAMPLE ACTIVITY - LESS THAN 10 mR/HR	IF sample activity GREATER THAN 10 mR/hr, THEN do the following: a) Take sample to Hot Lab for dilution IAW EPIP-4.26, HIGH LEVEL ACTIVITY SAMPLE ANALYSIS. b) GO TO Step 11.
_____ 10	TAKE SAMPLE TO COUNT ROOM	
_____ 11	NOTIFY THE FOLLOWING THAT SAMPLING IS COMPLETE: • Radiological Assessment Director • Radiation Protection Supervisor • Shift Manager	
_____ 12	GO TO STEP 28	

STEP	ACTION/EXPECTED RESPONSE	RESPONSE NOT OBTAINED

NOTE: CH-94.300, HIGH RADIATION SAMPLING SYSTEM, describes Contingency Plan sampling considerations.

_____ 13 REVIEW SYSTEM DESIGN BASES:

IF sampling is for,	THEN consider the following:
Reactor Coolant OR Containment Sump	• Design basis RCS estimated sample dose rates: - 1000 Rem/hr surface, undiluted - 1 Rem/hr surface, diluted - 650 mRem/hr at surface of cask when cover is NOT in place, undiluted • Design basis Liquid Sample Panel (LSP) dose rate is 365 mRem/hr at 1 meter • LSP is maintained at negative pressure
Containment Air	• CASP design basis dose rates equal 30 mR/hr at three feet • Containment Air Sample design basis dose rates: - 8,000 mR/hr surface - 100 mR/hr at one foot • CASP is maintained at a negative pressure • Dose rates and airborne contamination levels at the PCP/CCP are not normally affected by the sampling process

STEP	ACTION/EXPECTED RESPONSE	RESPONSE NOT OBTAINED

_____ 14 GIVE SAMPLE TEAM COPY OF SAMPLING PROCEDURE(s):

IF sampling is for,	THEN give Sample Team the following:
Reactor Coolant	• CH-41.120 (UNIT 1) / CH-42.120 (UNIT 2), HIGH RADIATION SAMPLING SYSTEM RCS DILUTED LIQUID SAMPLING OR CH-41.121 (UNIT 1) / CH-42.121 (UNIT 2), HIGH RADIATION SAMPLING SYSTEM RCS UNDILUTED LIQUID SAMPLING • EPIP-4.26, HIGH LEVEL ACTIVITY SAMPLE ANALYSIS
Containment Sump	• 1-OP-12.5, HIGH RADIATION CONTAINMENT SUMP SAMPLING • EPIP-4.26, HIGH LEVEL ACTIVITY SAMPLE ANALYSIS
Containment Air	CH-41.310 (UNIT 1) / CH-42.310 (UNIT 2), HIGH RADIATION SAMPLING SYSTEM CONTAINMENT AIR SAMPLING

STEP	ACTION/EXPECTED RESPONSE	RESPONSE NOT OBTAINED

NOTE: Prompt notification of RPS upon detection of stop work dose rates at the Primary Sample Room is essential for timely classification decision-making.

_____ 15 BRIEF SAMPLE TEAM:

a) Review sampling and analysis procedures, as appropriate

b) Establish and review entry and exit routes (use ALARA)

c) Review RWP requirements for sample locations (e.g., PCP, LSP, PCP/CCP, CASP, as appropriate):

- Stay times
- Protective clothing
- Dosimetry
- Respiratory equipment

- Monitoring

d) Review criteria for promptly reporting stop work dose rate

e) Review cautions:

- High radiation levels
- High activity sample level(s) (for Containment Air samples, estimate the correct volume of sample to be collected using the gas sampler (RCT))
- High sample pressure (for Reactor Coolant samples)
- Open valves slowly

f) Give team a copy of this procedure

_____ 16 HAVE SAMPLE TEAM DRESS OUT IAW RWP

STEP	ACTION/EXPECTED RESPONSE	RESPONSE NOT OBTAINED
_____ 17	NOTIFY RPS THAT SAMPLE TEAM IS READY FOR DISPATCH	
_____ 18	ASK RPS FOR CURRENT PLANT STATUS	
_____ 19	GIVE UPDATE TO TEAM MEMBERS	
_____ 20	DISPATCH SAMPLE TEAM	
_____ 21	CHECK SAMPLE - CONTAINMENT AIR	IF Reactor Coolant or Containment Sump sample, THEN GO TO Step 26.
_____ 22	VERIFY SAMPLE PREPARED FOR TRANSPORT: a) Sample container labelled with the following information: • Sample ID and Unit # • Sample volume • Date and time • Dose rate b) Glass bottle and syringe assembly put in separate bags/containers	
_____ 23	CHECK SAMPLE CONTACT READING - LESS THAN 10 MR/HR	IF sample contact reading GREATER THAN 10 mR/hr, THEN have HP initiate EPIP-4.26, HIGH LEVEL ACTIVITY SAMPLE ANALYSIS.

STEP	ACTION/EXPECTED RESPONSE	RESPONSE NOT OBTAINED
_____ 24	TAKE SAMPLE TO COUNT ROOM:	
	a) Use pre-planned route	
	b) Monitor radiological conditions during transit	
	c) Check dose rates along route within expected levels	c) Do the following: 1) Notify RPS. 2) Identify route of lowest dose.
	d) Maintain ALARA	
_____ 25	GO TO STEP 27	
_____ 26	HAVE REACTOR COOLANT SAMPLE ANALYZED:	
	a) Refer to EPIP-4.26, HIGH LEVEL ACTIVITY SAMPLE ANALYSIS, for sample dilution	
	b) Transport sample to Hot Lab or HRSS hood for dilutions	
	c) Implement appropriate Chemistry procedure for analysis	
	d) Check if diluted HRSS sample is to be flushed back through system for disposal	d) GO TO Step 27.
	e) Implement affected unit HIGH RADIATION SAMPLING SYSTEM SAMPLE DISPOSAL OR STORAGE procedure Unit 1 - CH-41.820 Unit 2 - CH-42.820	

STEP	ACTION/EXPECTED RESPONSE	RESPONSE NOT OBTAINED

_____ 27 NOTIFY THE FOLLOWING INDIVIDUALS ONCE SAMPLING HAS BEEN COMPLETED:

- Radiation Protection Supervisor
- Shift Manager
- Station Emergency Manager

_____ 28 TERMINATE EPIP-4.35:

- Give completed EPIP-4.35, forms and other applicable records to the Radiation Protection Supervisor
- Completed by: _____

  Time: _____

  Date: _____

-END-

VIRGINIA POWER
NORTH ANNA POWER STATION
EMERGENCY PLAN IMPLEMENTING PROCEDURE

NUMBER	PROCEDURE TITLE	REVISION
EPIP-5.07	ADMINISTRATION OF RADIOPROTECTIVE DRUGS (With 2 Attachments)	12
		PAGE 1 of 4

PURPOSE

To obtain authorization and medical advice concerning administration of radioprotective drugs, and to provide information regarding dose and side effects to individuals who may be asked to take KI.

LEVEL 2 DISTRIBUTION
This Document Should Be Verified
And Annotated To A Controlled Source
As Required to Perform Work

ENTRY CONDITIONS

Any one of the following:

1. Activation by another EPIP.
2. Activation by CPIP-6.2, RADIOLOGICAL ASSESSMENT COORDINATOR.
3. Survey results indicate inhalation dose may have exceeded 25 Rem.
4. Entry into high airborne activity area where inhalation dose may exceed 25 Rem.

Approvals on File

Effective Date 7/1/2003

STEP	ACTION/EXPECTED RESPONSE	RESPONSE NOT OBTAINED
_____ 1	INITIATE PROCEDURE: • Initiated By: _____ Date: _____ Time: _____	
	NOTE: The Recovery Manager (RM) may authorize administration of KI for Offsite Monitoring Teams and LEOF personnel.	
_____ 2	GET AUTHORIZATION FROM SEM/RM: a) Review criteria for administering radioprotective drugs from controlling procedure with SEM/RM: • EPIP-4.05, RESPIRATORY PROTECTION AND KI ASSESSMENT • CPIP-6.2, RADIOLOGICAL ASSESSMENT COORDINATOR b) Ask SEM/RM to approve use of radioprotective drugs c) Record SEM/RM approval in event log	IF authorization NOT granted, THEN GO TO Step 10.
_____ 3	HAVE INDIVIDUAL(s) RECEIVING KI READ AND COMPLETE ATTACHMENT 1, RADIOPROTECTIVE DRUG DOSAGE, SIDE EFFECTS AND MEDICAL STATEMENT	IF individual does NOT sign Attachment 1, THEN do the following: a) Do NOT issue KI to individual b) IF other individual(s) selected, THEN continue procedure for processing other individuals. IF NO other individual requires KI, THEN GO TO Step 10.

STEP	ACTION/EXPECTED RESPONSE	RESPONSE NOT OBTAINED

NOTE: Copies of the Emergency Personnel Notification List (EPNL) are maintained by Security, in the TSC, and in the LEOF/CEOF.

_____ 4	NOTIFY MEDICAL STAFF: a) Use EPNL (Position 291) to get telephone number for medical staff b) Notify medical staff of need to issue KI and to whom it will be issued c) Ask if KI should be issued to individual(s) who checked box 2, 3 or 4 of Attachment 1, Section III	IF medical staff can NOT be notified immediately, THEN do the following: 1) Continue this procedure. 2) Repeat attempts to contact medical staff.
_____ 5	CHECK EITHER OF THE FOLLOWING CONDITIONS EXIST: • Individual(s) checked Box 1 • Medical consent given for individual(s) who checked Box 2, 3 or 4	IF Box 5 checked, THEN do the following: a) Do NOT consider individual for emergency work. b) Do NOT issue KI. c) GO TO Step 10. IF medical consent NOT given, THEN GO TO Step 10.
_____ 6	GET TABLETS FROM NAPS MEDICAL FACILITY OR COUNT ROOM	Get alternate supply from Surry Power Station.

STEP	ACTION/EXPECTED RESPONSE	RESPONSE NOT OBTAINED

* *

CAUTION: Potassium iodide should not be used by people allergic to iodine without prior medical consent.

* *

NOTE: Administration of radioprotective drugs is preferably done prior to exposure, although administration within 2 hours after exposure is considered acceptable.

_____ 7 GIVE RADIOPROTECTIVE DRUGS TO DESIGNATED INDIVIDUAL

_____ 8 COMPLETE ATTACHMENT 2, POTASSIUM IODINE ISSUE LOG

_____ 9 DO FOLLOW-UP ASSESSMENT IAW NORMAL STATION PROCEDURES:

a) Wait at least 24 hours after exposure was received

b) Do follow-up assessment

_____ 10 TERMINATE EPIP-5.07:

- Give EPIP-5.07, forms, and other applicable records to the Radiological Assessment Director/Radiological Assessment Coordinator
- Completed by: _____
  Date: _____
  Time: _____

-END-

NUMBER	ATTACHMENT TITLE	REVISION
EPIP-5.07	RADIOPROTECTIVE DRUG DOSAGE,	12
ATTACHMENT 1	SIDE EFFECTS AND MEDICAL STATEMENT	PAGE 1 of 1

SECTION I: DOSAGE AND SIDE EFFECTS

****

CAUTION

Potassium Iodide should not be used by people allergic to Iodine. Keep out of reach of children. In case of overdose or allergic reaction, contact a physician or public health authority.

****

DIRECTIONS FOR USE: ADULTS: One (1) tablet once a day. DO NOT take tablet for more than 10 days.

SIDE EFFECTS:

Usually, side effects occur when people take higher doses for longer periods of time. Do not take more than the recommended dose and do not take dose for longer than the time that is recommended to you. Side effects are unlikely due to low doses over short periods of time.

Possible side effects are skin rashes, swelling of salivary glands, and "iodism" (metallic taste, burning of mouth and throat, sore teeth and gums, symptoms of head cold, and sometimes stomach upset and diarrhea).

A few people have an allergic reaction with more serious symptoms. These could be fever and joint pains, swelling of parts of the face and body, and severe shortness of breath, requiring immediate medical attention.

Taking iodide may rarely cause overactivity of the thyroid gland, underactivity of the thyroid gland, or enlargement of the thyroid gland (goiter).

WHAT TO DO IF SIDE EFFECTS OCCUR:

If side effects are severe or if you have an allergic reaction, stop taking potassium iodide and call a doctor.

SECTION II:

1. [ ] I have read Section I, "DOSAGE AND SIDE EFFECTS".

SECTION III:

Note: Items 1 through 4 below should be answered to the best of your knowledge.

1. [ ] I have no known sensitivity to Iodine, nor do I have a medical condition that would make me reluctant to take Iodine tablets.

2. [ ] I have a known sensitivity to Iodine.

3. [ ] I have a medical condition that may negate my being able to take KI tablets, e.g., hyperthyroidism, hypothyroidism, etc.

4. [ ] I am currently taking thyroid hormone tablets.

5. [ ] I am a Declared Pregnant Worker under provisions of, or hereby state my intention to declare pregnancy in accordance with, VPAP-2101, Radiation Protection Program.

NAME: _____ (print): _____ (signature) : DATE: _____

NUMBER	ATTACHMENT TITLE	REVISION
EPIP-5.07	POTASSIUM IODINE ISSUE LOG	12
ATTACHMENT 2		PAGE 1 of 1

NAME	SS NUMBER	TIME OF EXPOSURE	TIME OF INITIAL KI DOSE	ISSUED BY